EPA/600/2-88/070
April 1989

Generalized Methodoloav for Conducting Industrial Toxicity Reduction Evaluations (TREs)

J.A. Fava
D. Lindsay
W. H. Clement
R. Clark
G.M. DeGraeve
J.D. Cooney
Battelle Columbus Division

Stephen Hansen
S.R. Hansen and Associates

William Rue
E.A. Engineering Science and Technology, Inc.

Sam Moore
Burlington Research Inc.

Perry Lankford
Aware, Inc.

Contract Number
68-03-3248

Project Officer
Kenneth Dostal

The Chemicals and Chemical Product Branch
Risk Reduction Engineering Laboratory
U.S. Environmental Protection Agency
Cincinnati, Ohio 45268

Disclaimer

The information in this document has been funded wholly or in part by the United States Environmental Protection Agency under Contract 68-03-3248 to Battelle Columbus Division. It has been subjected to the Agency's peer and administrative review, and it has been approved for publication as an EPA document. Mention of trade names or commercial products does not constitute endorsement or recommendation for use.

Foreword

Today's rapidly developing and changing technologies and industrial products and practices frequently carry with them the increased generation of materials that, if improperly dealt with, can threaten both public health and the environment. The U.S. Environmental Protection Agency is charged by Congress with protecting the nation's land, air, and water resources. Under a mandate of national environmental laws, the Agency strives to formulate and implement actions leading to a compatible balance between human activities and the ability of natural systems to support and nurture life. These laws direct the EPA to perform research to define our environmental problems, measure the impacts, and search for solutions.

The Risk Reduction Engineering Laboratory is responsible for planning, implementing, and managing research, development, and demonstration programs to provide an authoritative, defensible engineering basis in support of the policies, programs, and regulations of the EPA with respect to drinking water, wastewater, pesticides, toxic substances, solid and hazardous wastes, and Superfund-related activities. This publication is one of the products of that research and provides a vital communication link between the researcher and the user community.

The purpose of this document is to present guidance for the performance of Toxicity Reduction Evaluations (TREs) at industrial facilities. This is accomplished by presenting a generalized methodology for designing and conducting a TRE and 10 supporting case studies which illustrate various approaches that have been used in the performance of TREs to date.

E. Timothy Oppelt, Director
Risk Reduction Engineering Laboratory

Abstract

The U.S. Environmental Protection Agency or state regulatory agencies, under the Clean Water Act, can require industries which cannot achieve water quality based effluent limitations specified in their NPDES permit to conduct a Toxicity Reduction Evaluation (TRE). The objective of the TRE is to determine those actions necessary to reduce the effluent's toxicity to acceptable levels. This approach was written to describe a generalized methodology for the design and performance of a TRE at an industrial facility. The generalized methodology was developed based on the insights learned in completing 10 TRE case studies.

A six-tier approach was directed toward the reduction of toxicity of the whole effluent rather than specific components within the effluent. A flow chart was designed as a dichotomous key linking the phases in a systematic progression to achieve the final result, which is an effluent that consistently meets the toxicity limitation assigned to it. The six tiers include: 1) information and data acquisition; 2) an evaluation of remedial actions to optimize the operation so as to reduce final effluent toxicity; 3) characterization/identification of the cause(s) of the final effluent toxicity; 4) identification of the source(s) of the toxicity in the facility; 5) identification and evaluation of methods for reducing toxicity in the final effluent; and 6) follow-up of the toxicity reduction to confirm that the toxicity limitation is met and maintained. The 10 completed TREs that provided the basis for the structure of the protocol are appended as case studies and follow the same generalized format presented in the protocol.

Contents

		Page
Disclaimer		ii
Foreword		iii
Abstract		iv
Figures		x
Tables		xi
Glossary		xii
Acknowledgments		xiii
Section 1.	Introduction	1-1
	Purpose	1-1
	Regulatory Framework	1-1
	Objectives of a TRE	1-1
	Available Approaches	1-1
	Content of this Document	1-2
	Flow-Chart Overview	1-3
Section 2.	Information and Data Acquisition	2-1
	Regulatory Information	2-1
	Facility Monitoring Data	2-2
	NPDES Monitoring Data	2-2
	In-House Monitoring Data	2-2
	State Agency Monitoring Data	2-2
	Plant and Process Description	2-2
	Process and Treatment Plant Descriptive Data	2-2
	Physical/Chemical Monitoring Data	2-3
	Analysis of Data	2-3
Section 3.	Good Housekeeping	3-1
	Initiation of the Housekeeping Study	3-1
	Evaluation of Housekeeping Practices	3-3
	Identification of Potential Problem Areas	3-4
	Identification of Corrective Measures	3-4
	Selection of Corrective Measures	3-5
	Implementation of Corrective Measures	3-5
	Follow-Up and Confirmation	3-5
Section 4.	Treatment Plant Optimization	4-1
	Identification of Available Information	4-1
	Identification and Evaluation of Influent Wastestreams	4-2
	Description of Treatment System	4-3
	Analysis of Treatment System Operation	4-3
	Implementation of Corrective Action	4-4
	Follow-Up and Confirmation	4-5
Section 5.	Chemical Optimization	5-1
	Information Gathering	5-1
	Process Chemical Review	5-2
	Review MSDS Information	5-3
	Chemical Composition Screen of Incoming Raw Materials	5-3
	Outcome of the Chemical Optimization Phase	5-3

Contents (continued)

		Page
	Data Analysis	5-4
	Follow-Up and Confirmation	5-4
Section 6.	Toxicity Identification Evaluation (TIE)	6-1
	Phase I – Toxicity Characterization Procedures	6-1
	Components of Variability	6-3
	Determining the Number and Timing of Samples	6-3
	Toxicity Testing Procedures	6-3
	Description of Characterization Methods	6-4
	Quality Assurance/Quality Control	6-5
	Phase II – Identification of Specific Toxicants	6-5
	Phase III -Confirmation of Identifications	6-6
Section 7.	Source Identification Evaluation	7-1
	Setting the Initial Search Image	7-2
	Sample Collection from the Influent Streams or Selected Process Streams	7-2
	Chemical Specific Analyses for Tracking to Toxicant Sources	7-2
	Evaluate Treatment Effects on Identified Toxicants	7-4
	Use Bench Scale Model to SimulateTreatment Plant Degradation and Track Toxicity to Source Streams	7-4
	Characterize the Toxicity of Suspect Source Streams	7-5
	Further Upstream Investigations	7-6
Section 8.	Toxicity Reduction Methodologies	8-1
	Source Reduction	8-1
	Waste Treatment Operations Improvements	8-2
	Evaluation of Alternative Reduction Methodologies	8-3
	Selection of Reduction Methodology	8-5
	Implementation of the Solution	8-5
	Follow-Up and Confirmation	8-5
Section 9.	Follow-Up and Confirmation	9-1
Section 10.	References	10-1
Appendix A:	TRE Case Summaries	A-1
	Introduction	A-1
Section A-1	Case History: A Multipurpose Specialty Chemical Plant (MSCP) in Virginia	A-3
	Introduction	A-3
	Initial Data and Information Acquisition	A-3
	Toxicity Identification Evaluation (TIE)	A-4
	Effluent Toxicity	A-4
	Characterization and Fractionation - Causative Agent Identification	A-4
	Source Investigation	A-5
	Confirmation of Source or Agent	A-5
	Toxicity Reduction Approaches	A-6
	Treatability Evaluations	A-7
	Other Methods Examined	A-7
	Basis for Selection of Method	A-7
	Follow-Up and Confirmation	A-7
	Effectiveness of Solution	A-7
	Final Comments, Recommendations, and Conclusions	A-7
	Problems Encountered	A-7
	References	A-7
Section A-2	Case History: Tosco Corporation's Avon Refinery, Martinez, California	A-9
	Initial Data and Information Acquisition	A-9
	Toxicity Identification Evaluation (TIE)	A-9

Contents (continued)

		Page
	Selection of a Monitoring Tool	A-9
	Chemical Fractionation	A-11
	Single Chemical Analyses	A-11
	Source Investigation Study for Toxicity	A-12
	Toxicity Reduction Through the Existing Treatment System	A-12
	Process Stream Evaluation	A-12
	Biodegradability of Process Stream Toxicity	A-13
	Toxicity Reduction Approaches	A-13
	Follow-Up and Confirmation	A-14
	Problems Encountered	A-14
	References	A-14
Section A-3	Case History: Martinez Manufacturing Complex, Shell Oil Company	A-15
	Introduction	A-15
	Initial Data and Information Acquisition	A-15
	Plant Description	A-15
	Toxicity Identification Evaluation (TIE)	A-15
	Characterization and Fractionation	A-15
	Confirmation of Toxic Agents	A-17
	Toxicity Reduction Approaches	A-17
	Oil and Grease	A-17
	Ammonia	A-17
	Amines (Organic Nitrogen)	A-17
	Flocculation Polymers (PEI and DMAEM/AM)	A-18
	Suspended Solids	A-18
	Follow-Up and Confirmation	A-18
	Problems Encountered	A-18
	Water Quality-Based Toxicity Limit	A-18
	References	A-18
Section A-4	Case History: A North Carolina Textile Mill	A-21
	Introduction	A-21
	Initial Data and Information Acquisition	A-21
	Process Description	A-21
	Wastewater Treatment Plant Description	A-21
	Characteristics of Influent and Effluent	A-21
	Toxicity Reduction Evaluation (TRE)	A-21
	Effluent Toxicity	A-21
	Characterization and Fractionation	A-22
	Toxicity Reduction Approaches	A-23
	Metals Reduction Experiment	A-23
	Extended Biological Treatment Experiment	A-23
	Conclusions: Toxicity Reduction Experiments	A-24
	Implementation of Toxicity Reduction Recommendations	A-24
	Follow-Up and Confirmation	A-25
	Problems Encountered	A-25
	References	A-25
Section A-5	Case History: A North Carolina Metal Product Manufacturer	A-27
	Introduction	A-27
	Initial Data and Information Acquisition	A-27
	Process Description	A-27
	Wastewater Treatment Plant Description	A-27
	Housekeeping	A-27
	Characteristics of Influent and Effluent	A-27
	Chemical Usage Review	A-27

Contents (continued)

		Page
	On-site Visit	A-28
	Toxicity Identification Evaluation (TIE)	A-28
	Effluent Toxicity	A-28
	Characterization and Fractionation	A-28
	Metal and Toxicity Reduction Experiments	A-29
	Field Application of Laboratory Procedures	A-30
	Toxicity Characterization Procedures	A-30
	Receiving Stream Effluent Concentrations	A-31
	Conclusions and Recommendations for Toxicity Reduction	A-31
	Follow-Up and Confirmation	A-31
	References	A-31
Section A-6	Case History: Texas Instruments Facility in Attleboro, Massachusetts	A-33
	Introduction	A-33
	Initial Data and Information Acquisition	A-33
	Toxicity Identification Evaluation (TIE)	A-33
	Effluent Toxicity	A-33
	Characterization of the Effluent	A-33
	Toxicity Reduction Approaches	A-35
	Pilot Testing	A-36
	Conclusions, Comments, and Recommendations	A-36
	References	A-36
Section A-7	Case History: Chemical Plant I	A-37
	Introduction	A-37
	Initial Data and Information Acquisition	A-37
	Toxicity Identification Evaluation (TIE)	A-37
	Toxicity Screening	A-37
	Toxicity Reduction Approaches	A-39
	Source Reduction	A-39
	Powdered Activated Carbon Treatment (PACT)	A-40
	Granular Activated Carbon (GAC) Adsorption	A-40
	Ozonation	A-40
	Basis for Selection of Method	A-40
	Follow-Up and Confirmation	A-41
	Problems Encountered	A-41
	Recommendations, Comments and Conclusions	A-41
	Reference	A-41
Section A-8	Case History: Chemical Plant II	A-43
	Introduction	A-43
	Initial Data and Information Acquisition	A-43
	Plant or Process Description	A-43
	Effluent Toxicity	A-43
	Evaluation of Treatment Process Optimization	A-43
	Toxicity Identification Evaluation (TIE)	A-43
	Causative Agent Identification	A-43
	Confirmation of Source or Agent	A-45
	Treatability Evaluations	A-45
	Source Treatment	A-45
	End-of-Pipe Treatment	A-45
	Final Comments, Recommendations and Conclusions	A-45
Section A-9	Case History: TRE of I.T.T. Effluent	A-47
	Introduction	A-47
	Initial Data and Information Acquisition	A-47
	Plant Description	A-47

Contents (continued)

		Page
	Characteristics of Effluent	A-47
	Toxicity Identification Evaluation (TIE)	A-47
	Data Collection and Methods	A-47
	Other toxicity tests	A-48
	Effluent Toxicity	A-48
	Characterization and Fractionation	A-49
	Confirmation of Causative Agent	A-49
	Toxicity Reduction Approaches	A-51
	Treatability Evaluation	A-51
	Air Stripping	A-51
	Nitrification – Denitrification	A-51
	Problems Encountered	A-51
	References	A-52
Section A-10	Case History: Monsanto Chemical Manufacturing Facility	A-53
	Introduction	A-53
	Initial Data and Information Acquisition	A-53
	Site1	A-53
	Site2	A-53
	Site 3	A-53
	Toxicity Identification Evaluation (TIE)	A-53
	Site1	A-54
	Site2	A-54
	Site 3	A-55
	Toxicity Reduction Approaches	A-56
	Site1	A-56
	Site2	A-56
	Site3	A-56
	Follow-Up and Confirmation	A-56
	Site 2	A-56
	Problems Encountered	A-56
	Site 1	A-56
	References	A-56

Figures

		Page
Figure 1.1.	Overview of the water quality-based toxics control process.	1-2
Figure 1.2.	Toxicity Reduction Evaluation (TRE) flow chart.	1-4
Figure 3.1.	Good housekeeping logic flow diagram.	3-2
Figure 4.1.	Treatment plant optimization logic flow diagram.	4-2
Figure 5.1.	Chemical optimization flow chart.	5-2
Figure 6.1.	Toxicity Identification Evaluation (TIE) strategy flow chart.	6-2
Figure 7.1.	Source identification evaluation flow chart.	7-3
Figure Al-l.	Multi-purpose specialty chemical waste flow diagram.	A-4
Figure A2- 1.	Conceptual diagram of Tosco's wastewater treatment system with designation of sites sampled during various elements of this study.	A-10
Figure A4-1.	Early TRE 48-hour *D. pulex* acute static bioassay history, Glen Raven Mills.	A-22
Figure A4-2a.	Pre- and post- TRE 48-hour *D. pulex* acute static bioassay history, Glen Raven Mills.	A-25
Figure A4-2b.	Pre- and post-TRE monthly average effluent flow (MGD), Glen Raven Mills.	A-25
Figure A5-1a.	48-hour daphnid acute static bioassay history, Halstead Metal Products.	A-30
Figure A5-1b.	Total recoverable copper concentrations, corresponding composite effluents	A-30
Figure A6-1.	Texas Instruments Attleboro outfall locations.	A-34
Figure A7- 1.	Waste treatment plant process flow diagram.	A-38
Figure A8- 1.	Wastewater flow and treatment schematic.	A-44
Figure A9- 1.	A schematic diagram of the processes in the I.T.T. Rayonier wastewater treatment system.	A-48
Figure A9-2.	Number of cystocarps for *Champia parvula* (as % of control) plotted against % effluent.	A-51
Figure A10-1	ESC effluent fractionation and testing scheme.	A-54

Tables

		Page
Table 2.1.	Checklist of Useful Facility Specific Data	2-l
Table 8-l.	Effluent Levels Achievable in Heavy Metal Removals	8-3
Table 8.2.	Relative Biodegradability of Certain Organic Compounds	8-4
Table 8.3.	Activated Carbon Treatment of Selected Compounds	8-4
Table 8.4.	Air Stripping of Selected Compounds	8-4
Table Al-l.	Summary of Toxicity Data on Final Effluent Samples Collected at Site No. 1	A-6
Table A4- 1.	Effluent Characterization, Glen Raven Mills TRE, Prechlorination Composite of December 17-18, 1985.	A-23
Table A5-1.	Influent and Effluent Data Summary, Halstead Metal Products, August 1985 - November 1986	A-27
Table A6-1.	Range of *Daphnia pulex* LC50's and NOAEL	A-34
Table A6-2.	Summary of Results From Representative Acute and Chronic Effluent Toxicity Tests, Texas Instruments Toxicity Reduction Evaluation August 1985	A-35
Table A7- 1.	Typical Classification Results of Wastewater Sources	A-39
Table A7-2.	Treatability and Toxicity Factors from Identified Wastestreams	A-39
Table A8- 1.	Comparison of Reactor Performance	A-44
Table A9-1.	Additional Wastewater Characteristics During May 14-21, 1986	A-48
Table A9-2.	Description of I.T.T. Rayonier On-Site Samples	A-48
Table A9-3.	Toxicity and Ammonia for I.T.T. Rayonier Effluent Samples	A-50

Glossary

The following terms and abbreviations are used in this document:

BMP	Best Management Practices
BOD	Biological oxygen demand
COD	Chemical oxygen demand
CWA	Clean Water Act
DOT	U.S. Department of Transportation
EDTA	Ethylenediaminetetraacetic acid
MSDS	Material safety data sheet
NOEL	No observable effect levels
NPDES	National Pollutant Discharge Elimination System
OSHA	Occupational Safety and Health Administration
RCRA	Resource Conservation and Recovery Act
SIC	Standard industrial classification
SIE	Source identification evaluation
TIE	Toxicity identification evaluation
TOC	Total organic carbon
TRE	Toxicity reduction evaluation
TSD	Technical support document for water quality-based toxics control (U.S. EPA 1985)
TSS	Total suspended solids
TU	Toxicity unit
WWTP	Wastewater treatment plant

Acknowledgments

Battelle Columbus Division (BCD) prepared this document for the Risk Reduction Engineering Laboratory (RREL), U.S. Environmental Protection Agency, Cincinnati, Ohio. Mr. Kenneth Dostal of RREL was the Project Officer. Principal contributors include Dr. James A. Fava, Dr. William H. Clement and Daniel Lindsay, P.E. Other contributors include Srinivas Krishnan, Dennis McIntyre, Ron Clark, Dr. John D. Cooney, and Dr. G. Michael DeGraeve, technical reviewer.

Battelle Columbus Division used the expertise of four subcontractors to prepare this document. Principal contributors include Dr. Stephen R. Hansen of S. R. Hansen and Associates and William Rue of EA Engineering, Science and Technology, Inc. Other contributors include Samuel B. Moore of Burlington Research, Inc., and Perry Lankford, P.E., of Aware, Inc. Ms. Linda Anderson-Carnahan, Region V, U.S. Environmental Protection Agency, Dr. Philip Dorn of Shell Development Corporation, and Dr. Donald Grothe of Monsanto Corporation are acknowledged for their valuable contributions and as technical reviewers.

Mr. John Cannel1 of the Permits Division, U.S. Environmental Protection Agency served as the Agency's principal technical reviewer and contributed significantly to the development of this document.

The efforts and encouragement of William F. Brandes with the Permits Division are acknowledged.

Section I
Introduction

Purpose

The purpose of this document is to present guidance for the performance of Toxicity Reduction Evaluations (TREs) at industrial facilities. This is accomplished by presenting a generalized methodology for designing and conducting a TRE and is supported with case studies which illustrate various approaches that have been used in the performance of TREs to date. A synthesis of the methods and approaches employed in these case studies provided the basis for the generalized methodology.

This document is intended for use by industrial facilities that are required to perform a TRE. Permitting agencies may also use this document for reviewing plans submitted by regulated industries. In addition, supporting organizations that are preparing a site-specific TRE plan or conducting a TRE may use this document as a guide.

Regulatory Framework

On March 9, 1984, the U.S. Environmental Protection Agency (EPA) published a national policy statement entitled "Policy for the Development of Water Quality-Based Permit Limitation for Toxic Pollutants (U.S. EPA 1984). To implement the policy, EPA issued the Technical Support Document (TSD) for Water Quality-Based Toxics Control (U.S. EPA 1985a). The TSD presented procedural recommendations for identifying, analyzing, and controlling adverse water quality impacts caused by the discharge of toxic pollutants.

The overall process that one might go through to evaluate the potential impacts of an effluent discharge to an aquatic environment and the need to establish additional water quality based toxic controls is shown in Figure 1.1. This schematic illustrates the steps to be taken, from definition of water quality objectives, criteria, and standards, to the setting of the final permit conditions with monitoring requirements. When National Pollutant Discharge Elimination System (NPDES) permittees cannot achieve effluent limitations for toxicity, EPA or a state regulatory authority may require the discharger to conduct a Toxicity Reduction Evaluation. The legal basis for requiring TREs is discussed in the *Permit Writer's Guide to Water-Quality-Based Permitting for Toxic Pollutants* (U.S. EPA 1987a)

Objectives of a IRE

A TRE is an evaluation intended to determine those actions necessary to achieve compliance with water quality-based effluent limits (i.e., reducing an effluent's toxicity or chemical concentration(s) to acceptable levels). Water quality-based limits (i.e. the regulatory target) could include limits on whole effluent acute or chronic toxicity, and/or limits on individual chemical constituents. These limits are intended to protect beneficial uses of waterbodies, and consider factors such as dilution, environmental fate, and the sensitivity of the resident aquatic community. The TRE may identify a remedial action as simple as improved "housekeeping" procedures or the need to modify the operation of a component of the wastewater treatment system. On the other hand, for complex facilities with numerous and variable wastestreams, a TRE may involve a more extensive investigation to identify toxicant(s) of concern and/or cost-effective treatment or source reduction options.

Available Approaches

This document describes how to design and perform a TRE at an industrial facility. Other documents which provide guidance for performing specific components of this overall process are:

> EPA's Technical Support Document for Water Quality-Based Toxics Control. Office of Water, Washington, D.C., pages 57-58 (1985a).
>
> EPA's Permit Writer's Guide to Water Quality-Based Permitting for Toxic Pollutants. Office of Water, Washington, D.C., pages 43-54 (1987).
>
> EPA's Toxicity Reduction Evaluation Protocol for Municipal Wastewater Treatment Plants. November 1989.

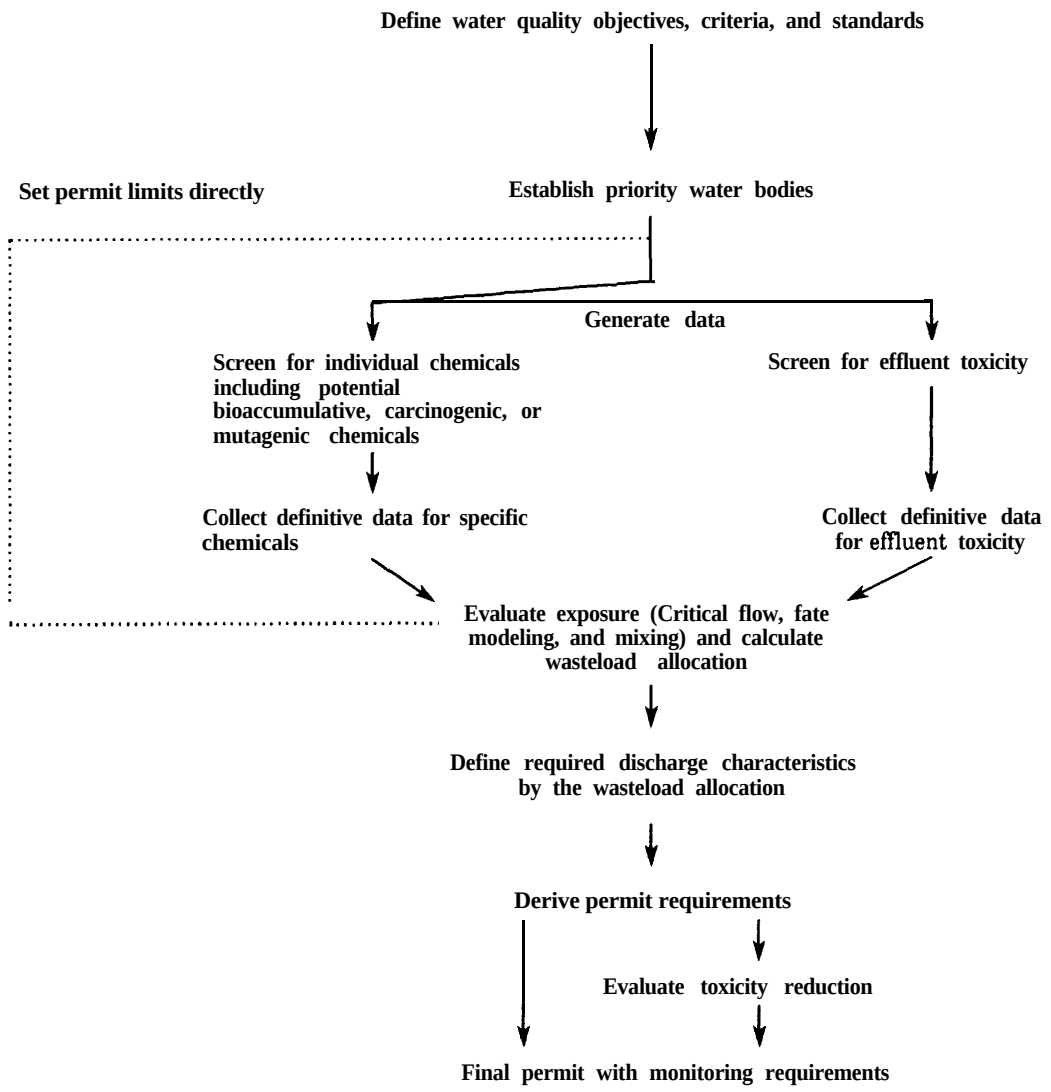

Figure 1.1. Overview of the water quality-based toxics control process. Source: U.S. EPA (1985a)

EPA's Methods for Aquatic Toxicity Identification Evaluations: Phase I - Toxicity Characterization Procedures. September 1988.

EPA's Methods for Aquatic Toxicity Identification Evaluations: Phase II - Toxicity Identification Procedures. November 1989.

EPA's Methods for Aquatic Toxicity Identification Evaluations: Phase III - Toxicity Confirmation Procedures. November 1989.

In addition to these documents, other references which describe specific methods for conducting aquatic bioassays, chemical analyses, engineering evaluations, and other components relevant to conducting a TRE are identified in subsequent sections of this document.

Content of this Document

This document presents a generalized methodology for designing and performing a TRE at an industrial facility. This methodology is primarily directed towards compliance with whole effluent toxicity limits rather than limits for individual chemicals. This approach is taken because in some cases control of whole effluent toxicity may be quite complicated and would greatly benefit from generalized methodological guidance. On the other hand, more information is available on the control of single chemicals with the main effort geared towards either application of available treatment methodologies and

development of new methodologies to control a discrete constituent or process chemical substitution.

Because of the numerous differences in operations and complexity of industrial facilities, in the characteristics and variability of their effluents (both chemical and toxicological), and in existing wastewater treatment systems, flexibility in the design and performance of a TRE is essential, and the approaches utilized must be facility-specific. As a result, the industrial TRE methodology presented in the following sections is intended to describe generalized approaches, which are represented by those procedures that have been used successfully to date.

It should be emphasized that the overall objective of this generalized methodology is to provide the framework and guidance on how to conduct a TRE. It is not intended to be a "cookbook". There are elements of this methodology which will not apply in all industrial TREs. Users of this document are encouraged to apply these approaches as analytical tools where appropriate, and to tailor the methodology according to site-specific determinations and circumstances. Experience to date has also demonstrated that clear communication between the industrial facility, the permitting authority, and contractors involved in conducting the TRE. This is important in understanding the objectives and goals for the TRE, establishing a reasonable schedule, and in reporting the progress and results during the time the TRE is being conducted.

How-Chaff Overview

A generalized flowchart for performing a TRE at an industrial facility is presented in Figure l-2. This flowchart presents a conceptual overview of the TRE process, illustrating how they might be linked, and indicating when decision points are reached. Each of the major components of the process are described in detail in subsequent sections of this document. However, in order to provide a general understanding of how the entire process might work, a brief overview of the TRE process is presented here.

The first tier of the TRE process is the acquisition of available data and facility-specific information. This phase is described in detail in Section 2 of this document. The available information can generally be divided into three categories. First, there is regulatory information which specifies the events leading up to the TRE, defines the regulatory objectives of the study, and clearly identifies the target for successful completion. In addition, the regulatory agency may set compliance deadlines for TRE completion, and specify intermediate dates for completion of and reporting on specific portions of the TRE. Second, there are effluent monitoring data (both chemical and biological) which may provide information on the toxicity of the effluent. Third, there is facility and process information which describes the configuration and operation of the facility. A synthesis of these three categories of information is used to define study objectives, identify what is already known, and possibly to provide clues as to the causes and sources of toxicity. This information may also suggest immediate actions which may be useful in reducing final effluent toxicity. The effectiveness of these actions can be evaluated in subsequent tiers of the TRE.

The second tier of the TRE process is the evaluation of remedial actions to optimize the operation of the facility so as to reduce final effluent toxicity. Three general areas of facility operation are considered: general housekeeping, treatment plant operation, and the selection and use of process and treatment chemicals. These evaluations are discussed in detail in Sections 3 through 5 of this document. For each of these areas of concern, an evaluation is made to determine if performance is optimal with regard to toxicity reduction. This evaluation should be made to identify obvious problem areas, plan and perform remedial actions, and determine if these actions reduce the final effluent toxicity to an acceptable level. If the problem appears solved, a monitoring program must still be initiated to confirm the solution, and to ensure that the problem does not recur. However, if these remedial actions fail to solve the toxicity problem, the study will proceed into a Toxicant Identification Evaluation (TIE).

The third tier of the TRE process is the TIE which is described in detail in Section 6 of this document. The objective of the TIE is to characterize and identify the cause(s) of final effluent toxicity. The evaluation can use both characterization procedures and chemical-specific analyses and, consequently, the characterizations/identifications may range from generic classes of toxic agents (e.g. non-polar organics) to specific chemical compounds. Because multiple samples are required to perform this tier, a major objective of the TIE is to determine if, and how, the cause of final effluent toxicity varies over time.

Once the TIE has been completed, the TRE process can go in either of two directions. One approach is to evaluate options for treating the final effluent, and methods for accomplishing this are described in Section 8. The other approach is to identify the source(s) of final effluent toxicity and then evaluate upstream (within plant) treatment options or process modifications. The source identification element of this second approach is described in Section 7 and the treatment methods element in Section 8. These two approaches are not necessarily mutually exclusive. In fact, a decision can be made to pursue both

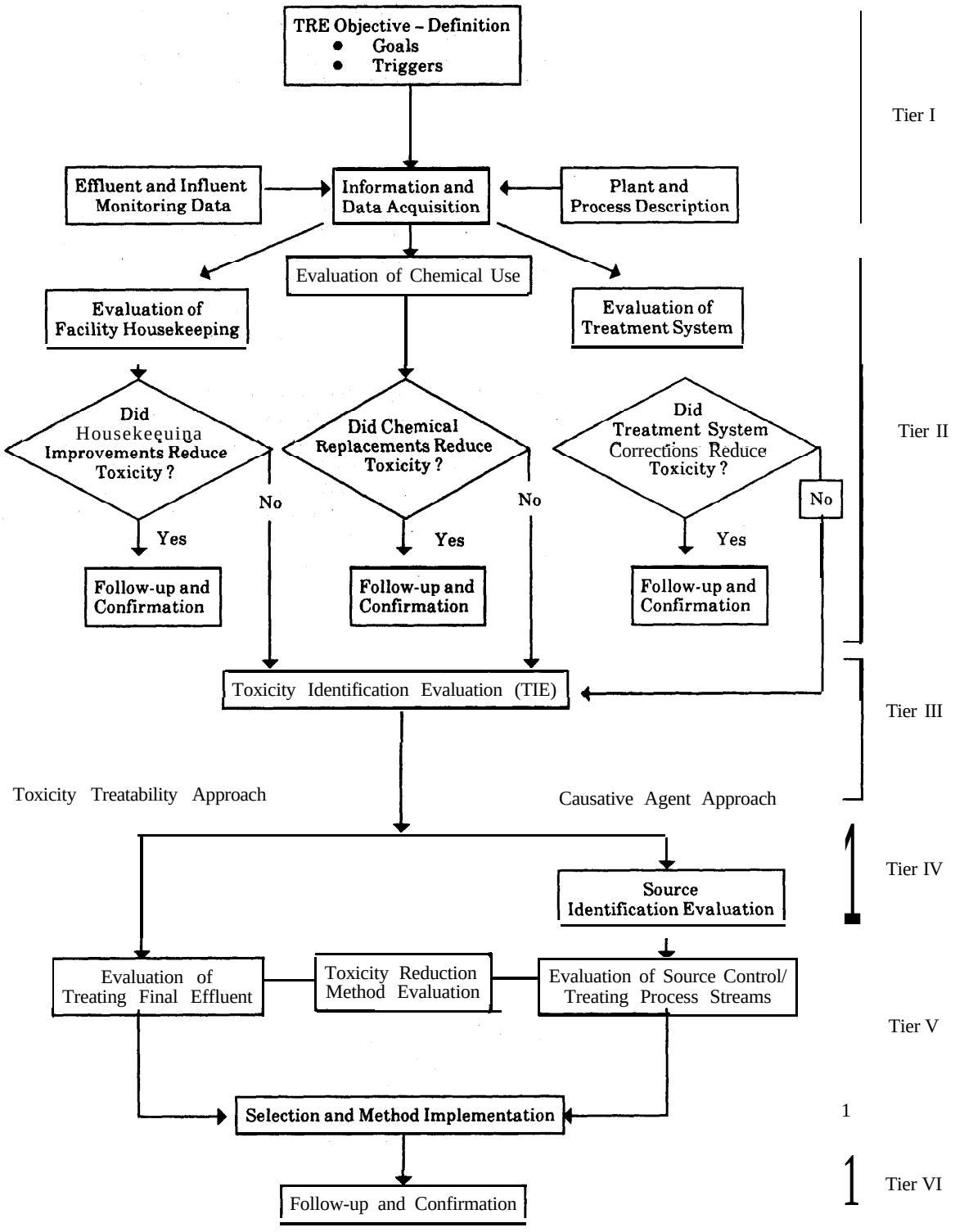

Figure 1.2. Toxicity Reduction Evaulation (TRE) flow chart.

approaches simultaneously, and then to select the most technically and economically attractive option.

The source identification evaluation (SIE) is the fourth tier in the TRE process. The objective of this evaluation is to identify those process streams which are significant sources of final effluent toxicity. A first step in the SIE may be to review the information and data collected on the causes of final effluent toxicity. This synthesis forms a search image for upstream sources. The subsequent approach would depend upon the specificity of this search image. If a specific toxic chemical has been identified as the causative agent, the SIE would be straightforward and have a high probability of success. It would involve the chemical analysis of process streams for the identified causative agent or its parent compound(s). Those process streams which contain the causative agent in sufficient concentrations would clearly be designated as sources of final effluent toxicity. On the other hand, if the search image is more general (e.g., a class of toxic compounds), the SIE may be more complicated. It would include the determination of the characteristics of the toxicity in the process streams feeding into the wastewater treatment system. A comparison of process stream characteristics against the search image would then be used to identify those process streams which are prime suspects as the source(s) of final effluent toxicity. In either case, the treatability or application of other control methods to these process streams would then be evaluated and the effectiveness confirmed according to methods described in Tier V (Section 8).

The evaluation of toxicity reduction methods, the fifth tier of the TRE process, is described in Section 8. The objective of this tier is to identify methods for reducing toxicity in the final effluent and/or source streams. Each method would be evaluated for technical and economic feasibility and the most effective method would be selected and implemented.

Follow-up and confirmation is the sixth and final tier of the TRE process and is described in Section 9. This tier becomes operative after the selected method for toxicity reduction has been implemented. Once the selected toxicity reduction alternative has been implemented, continued effluent toxicity testing over time is important to confirm that the toxicity target has been achieved and is being maintained.

Section 2
Information and Data Acquisition

The first step (Tier I) in performing a TRE should be the collection and analysis of any available information and data which might prove useful in designing the best directed and most cost-effective study for the facility under consideration. The pertinent information that is generally available falls into three categories:

the regulatory information which describes why the TRE is being required and what objectives are to be met (the NPDES permit requirement and schedule, for example);

the effluent monitoring data which describe the toxicity and physical/chemical nature of the final effluent; and

plant and process information which describes the physical layout of the plant, the processes in operation, and the physical/chemical nature of process wastewaters.

The amount of available information may be surprisingly large and a careful review followed by judicious use of selected analyses could provide valuable insight into the possible cause(s) and source(s) of toxicity, This information will help define an appropriate TRE program and, in some cases, may lead to a quick solution to the toxicity problem. An example of a possible checklist of data and information which might be obtained from a. facility during this step is presented in Table 2.1.

The ten case summaries presented in Appendix A reviewed available data and regulatory objectives prior to designing an investigative approach. Refer to these case summaries for further illustration of the acquisition and use of existing information.

Table 2.1. Checklist of Useful Facility Specific Data

1. **Industry name:**
2. **Address:**
3. **Industrial category**
4. **TRE and TIE objectives:**
5. **Products produced:**
6. **Chemicals used:**
   - a. **Amounts**
   - b. **Material Safety Data Sheets (MSDS)**
   - c. **Process in which chemical is used**
   - d. **Aquatic toxicity/biodegradability information on all chemicals used and their breakdown products.**
7. **Engineering drawings of facility**
   - a. **All floor and process drains with schematics**
   - b. **Potable and wastewater line locations**
   - c. **Steam line, boiler locations, cooling tower locations**
   - d. **Wastewater Treatment Plant (WWTP) schematic**
   - e. **Production flowchart and line schematic**
8. **Facility records**
   - a. **Water usage, water bills**
   - b. **NPDES or monitoring reports for 24 months**
   - c. **WWTP QA data reports**
   - d. **WWTP operator interview**
   - e. **WWTP flow recorder records**
   - f. **Complete toxicity test history**
   - g. **NPDES (or equivalent) permit**

Regulatory Information

As in any study, the probability of successfully completing a TRE will be greatly enhanced by a clear understanding of the objectives and goals before designing and implementing the evaluation. Since most TREs will be regulatory requirements, the responsible regulatory authority, either EPA or the state delegated with NPDES permitting authority, will set the appropriate objective or target for a TRE. A discharger will normally be required to conduct a TRE as a result of a violation of a whole effluent toxicity permit limit. In this case, the goal of the TRE will be achieving a level of effluent toxicity which meets the applicable permit limit. In other cases a TRE may be required where no whole effluent toxicity limit currently exists in the permit, but available effluent toxicity monitoring data indicate that water quality standards would be violated. In these situations, the goal of the TRE would be achieving the level of effluent toxicity which will meet a limit, which would protect the state standard, when it is placed in the permit. It is essential that the discharger has a clear understanding of both the whole effluent toxicity limit that they are required to meet and the toxicity test endpoint which will be used to demonstrate achievement of the TRE objective or target.

The determination of what discharger monitoring results are sufficient for requiring a TRE will be made by the regulatory authority on a site-specific basis. Where it is appropriate, more extensive effluent toxicity testing may be required prior to, or as the initial step of, the TRE. It should be noted that where the results of a TRE identify a specific pollutant as the cause of effluent toxicity, a chemical specific limit may be added to the permit to control this toxicant.

While the regulatory authority can specify the monitoring results that trigger a TRE, the objective or permit limit which, is to be achieved, and the schedule for conducting the TRE, the discharger is solely responsible for designing and conducting the TRE to meet the specified objective. The submission of a TRE plan for review by the regulatory authority prior to conducting the evaluation will facilitate the successful completion of the TRE and ensure that the objectives, endpoints and recommended approaches are clearly understood.

Facility *Monitoring* Data

Numerous sources of information are available concerning the quality and quantity of a facility's effluent. Three commonly available sources are: NPDES monitoring data (see Sections A7 and A9), in-plant supplemental monitoring data, and state agency monitoring data. Review and analysis of each of these should prove useful in the design of a TRE program and could provide information helpful in understanding the magnitude of the toxicity, toxicity variability over time, possible causative agents, and an appropriate toxicity monitoring tool.

Another possible use of the available effluent monitoring could be the identification of a cost-effective monitoring test for use in the TRE study. Effluent biomonitoring usually tests the effluent's toxicity using several species. A review of these results could allow for. the ranking of the tests according to sensitivity, speed, and cost. If several species are similarly sensitive, it may be possible to select the quickest and cheapest test as the routine monitoring tool for the TRE.

NPDES Monitoring Data

One possible source of information is the NPDES monitoring data which are routinely generated at the facility. This database usually provides a long record of the physical and chemical nature of the effluent. Included in this record may be concentrations of a number of single chemicals, BOD, COD, TOC, pH, temperature, DO, and effluent toxicity data. Existing chemical specific analyses and whole-effluent toxicity test data could also prove useful in defining how and why final effluent toxicity varies. Insights as to the variability would aid in designing the number and timing of samples to be characterized in the toxicity identification evaluation (TIE) tier of the TRE. If toxicity data are available, it might be possible to perform multivariate analysis to identify those parameters which are positively correlated with toxicity. This is done in case summaries A-3, A-8, and A-9. If a single chemical is highly correlated, it could be considered a potential suspect as the causative agent and the results of the TIE would then be used to evaluate and confirm the accuracy of that suspicion.

In-House Monitoring Data

Many industrial facilities perform more frequent and more detailed chemical analyses on their final effluent than are required in the NPDES permit. These additional data may be used for in-house evaluation of treatment plant operation, or perhaps in an attempt to identify current or potential problems. If toxicity test data are available, performance of multivariate analysis may identify chemical or physical parameters which are correlated with toxicity. As with the NPDES data, this effort may lead to a suspect causative agent or toxicity source and to the selection of a more cost-effective and rapid toxicity testing tool.

State Agency Monitoring Data

Frequently state agencies will have performed toxicity tests and selected chemical analyses on the effluent being evaluated. This information might also be useful in the investigation.

P/ant and Process Description

One of the early steps of any TRE is to understand how the facility is designed and operates. Relevant information includes facility blueprints, process and treatment plant descriptions, production timetables, process and treatment stream monitoring data, accident and upset reports, and turn-around schedules. Review and evaluation of these data may provide valuable insight as to the causes and sources of final effluent toxicity and perhaps how to better design the TRE study. Nearly all of the case summaries reviewed in the Appendix contain this step.

Process and Treatment Plant Descriptive Data

The configuration and general operating mode of process units and the wastewater treatment system can usually be determined based on a review of facility blueprints and operational records. Information on process streams which may prove particularly useful in the early stages of a TRE are the number and types of streams, their size, and variability. Understanding the types of processes which are performed at the facility may identify a

suspect stream because of problems that have been observed in the same or similar streams in other facilities.

Knowledge of the scheduled changes or events in process stream operation (i.e., batch, continuous, or intermittent) when coupled with toxicity data may provide strong evidence as to possible sources of final effluent toxicity and the reasons for variability of effluent toxicity. For example, assume that a particular process is run as a three-day batch operation once every two weeks; starting on Monday and ending on Wednesday. A review of the toxicity test results indicates that final effluent toxicity also generally follows the same two week pattern. This correlation would cause an investigator to further evaluate this evidence. In addition, correlations between turn-around schedules and toxicity could prove very useful in determining suspect source streams. If toxicity disappears while a process unit is undergoing service and reappears when the unit is back on line, a suspect stream has been identified and this lead should be pursued. Similarly, it is often *seen* that toxicity will increase when a unit starts up and then decrease to background levels after a few hours or days of operation. Good quality data from grab samples may permit identification of this type of phenomenon.

On the treatment system side, the information which might prove the most useful in the early stages of a TRE include the types and configuration of equipment, flow equalization facilities, and records of treatment plant upsets. Understanding the retention time of the system should help in selecting the proper frequency of testing required to detect effluent variability in the toxicity identification evaluation tier of the TRE. Correlations between plant upsets and toxicity events would suggest that an investigation of treatment plant operation should be one of the first components of the TRE study.

Another potentially productive approach could be correlations between season and toxicity. If such a pattern has been observed, and operating data indicate that the treatment system is less efficient during the period when high toxicity is measured, further evaluation of the treatment system may be warranted.

Physical/Chemical Monitoring Data

Most facilities maintain records of in-house monitoring that is routinely performed at various locations along the process and treatment streams. This monitoring usually consists of physical and chemical analyses performed to check on how well the units are operating. These data can be useful in identifying potential sources of final effluent toxicity. Chemical analysis of process streams may identify chemicals in concentrations which may exceed reported toxicological effect levels following treatment. If these same compounds have been identified in the final effluent, or if the scientific literature indicates that they are not biodegradable, it might be prudent to evaluate their role in final effluent toxicity. If these compounds have not been identified in the final effluent, it may be useful to design a set of analyses into the toxicant identification phase of the TRE which would be able to detect these compounds or their toxic breakdown products. It should be cautioned that TIE experiments evaluating the fate of specific process stream chemicals should only be initiated if there is evidence supporting the suspected degradation pathway, and the Phase I characterization results support this suspicion. Otherwise, such an effort may prove quite lengthy and hold little chance for success since existing treatment may already reduce the toxicity of these compounds.

Analysis of Data

In this section, several sources of data were identified which specify concentrations of chemicals both in the final effluent and in upstream sources. If toxicity data are also available for the same sample, it may be possible to perform correlation analyses between all numeric variables and toxicity. The objectives would be to identify those variables (i.e., constituents) which are positively correlated with final effluent toxicity. There are several data analysis techniques available for performing these types of correlation analyses including step-wise multiple regressions and cluster analyses. In addition, software packages make computer aided analysis quite user friendly. References for available techniques and software are presented in Table 2.2.

Table 2.2 Available Tools

Data Analysis Techniques

- **Drapper N.R., and H. Smith. Applied Regression Analyses, John Wiley and Sons, New York, New York, pg. 178 (1966).**
- **Pielou, EC. Cluster Analyses Techniques: The Interpretation of Ecological Data. Wiley Interscience, New York, New York (1987).**
- **Infometrex, Inc. Arthur, Pattern Recognition Software, Seattle, Washington (1986).**

Any chemicals identified via these correlation procedures would become candidates for further evaluation. Many chemical and physical parameters may be covarying in irregular and unpredictable manners to mask the relationship between the concentration of a single chemical and corresponding toxicity test result. Rarely would one expect the correlations to provide conclusive evidence of cause

and effect. However, significantly positive correlations may act as a pointer in the TRE process, focusing attention to possible chemicals of concern, and may be used to support the results of the TIE and source evaluation.

As a cautionary note, it should be recognized that a positive correlation between concentrations of a single chemical and toxicity may prove to be a false lead. Some chemicals may **covary** with the actual **toxicant** and, therefore, be mistaken as the causative agent. For example, emulsifiers are often added to pesticide formulations to promote solubility and facilitate application. The concentration of the emulsifier may correlate perfectly with toxicity, but it is probably not the toxic agent; in this case the pesticide would be the likely culprit.

In order to protect against the possibility of false positives, it is advisable to use Phase I Toxicity Characterization Procedures as a check on positive correlations (see Section 6). If characterization tests which are selected to specifically remove the suspect causative **toxicant(s)** (based on their physical/chemical nature) fail to remove or neutralize effluent toxicity, a false correlation is likely. Implementation of this check may prevent going down blind alleys when the TRE proceeds into the identification of specific causative agents.

Section 3
Good Housekeeping

Good housekeeping at an industrial facility covers plant practices and operations which may directly or indirectly affect effluent water quality. Factors which are involved in this area include:

- General facility cleanliness/tidiness;
- Facility spill prevention and control;
- Waste and materials storage areas;
- Materials handling operations, including loading stations, on-site transport, piping and valve assemblies;
- Waste handling and disposal operations; and
- Run-on/run-off control.

A facility which practices good housekeeping will reduce the chemical contributions which run-off, spillage, and similar occurrences make to toxic loading in the effluent stream.

This section investigates the individual elements of good housekeeping at an industrial facility and presents criteria by which these may be assessed. Methods to identify corrective measures are examined. Selection and implementation of appropriate corrective measures, and follow-up studies, round out the discussion. Throughout, it is assumed that a preliminary survey will focus on discovery and subsequent improvements. Figure 3.1 depicts schematically the steps involved in a good housekeeping study. Examples of housekeeping approaches are presented in Sections (Appendix) A-3, A-4, and A-5. These case summaries contain examples describing rerouting of waste streams, evaluation of dye machine ratios, and installation of simple drain traps to catch runoff materials.

Initiation of the Housekeeping Study

When unacceptable toxicity is identified in the effluent, a housekeeping survey should be planned. The intent of the survey is 1) to identify areas which may be contributing to the observed toxicity and 2) reduce these contributions through the use of best management practices (BMPs), administrative and procedural controls. Thus, low-cost, simple, direct solutions are desired.

The first step of the study requires the assembly and coordination of the study team, and the collection of relevant plant information. This can often be accomplished through a kick-off meeting at the plant where the participants get together to discuss the purpose and limits of the survey.

Housekeeping surveys tend to be somewhat subjective in nature. In order to avoid possible conflict between the survey team and plant personnel, it should be clearly established that the team is not seeking to uncover poor housekeeping but rather to uncover practices which, whether good or bad, may affect effluent toxicity. A clear understanding should be established with plant management and operations prior to the survey, including:

- the organizational channels which must be followed to obtain authorization to make the necessary changes;
- the resources available from the plant to investigate, define and implement an operational or procedural change; and
- the extent of justification required prior to implementation, including the effect that a particular action (or inaction) may have on overall plant operations;
- the cost and ease of implementation, and the level of benefit expected.

The justification criteria should be general enough that they may be applied to any plant area, yet specific enough that they yield useful information to the facility.

Survey team members should review plant procedures, documented and otherwise, to assess the level of importance placed on housekeeping. This will include documentation review as well as

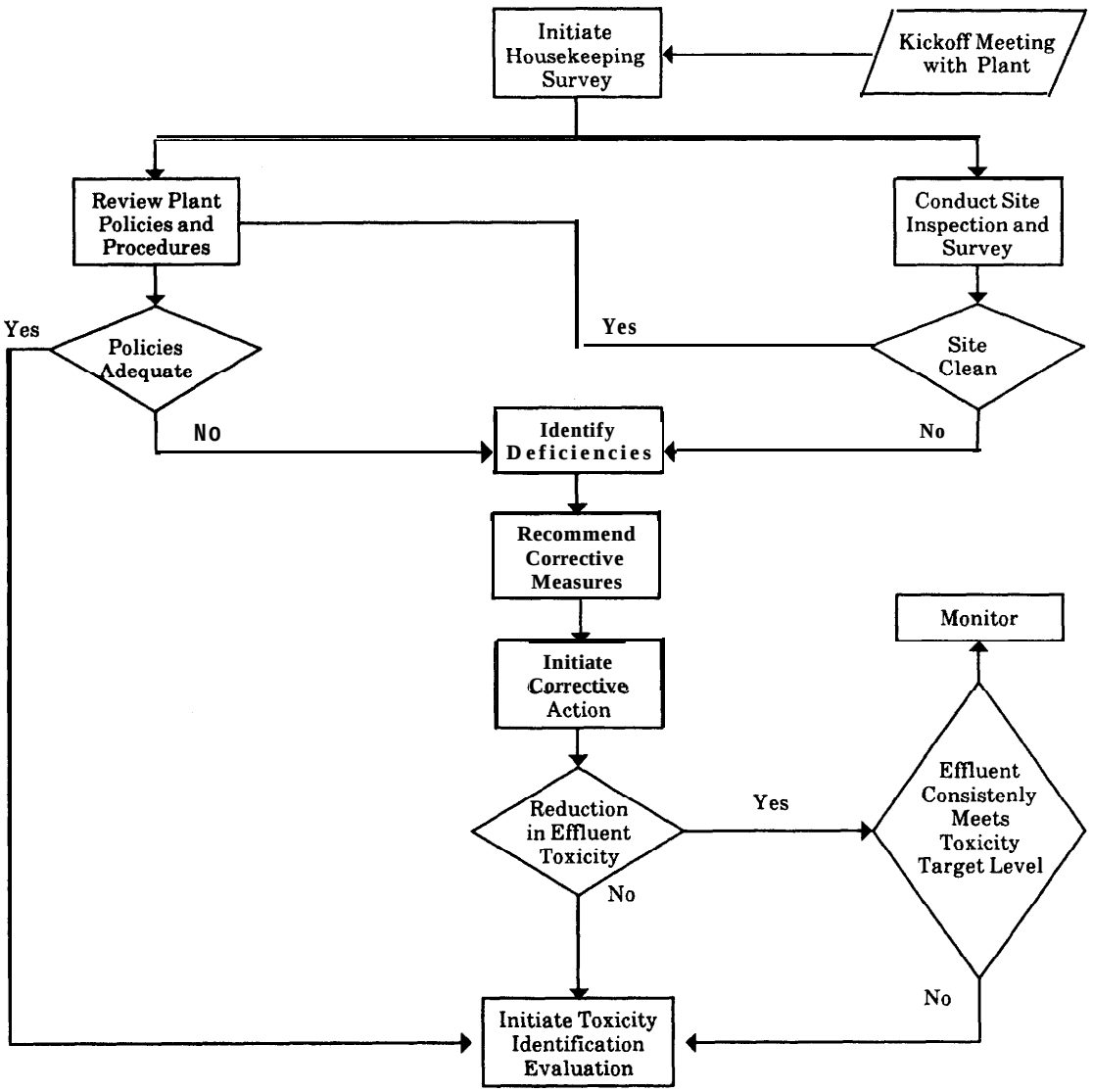

Figure 3.1. Good housekeeping logic flow diagram.

interviews with various plant personnel. Suggested sources of information include:

- Spill prevention and control plans developed to meet various regulatory requirements [CWA, Resource Conservation and Recovery Act (RCRA)];
- RCRA facility documentation, including waste handling and storage plans;
- OSHA training documentation, which may contain information on material handling operations and procedures;
- DOT related information, including any developed specifically for the loading, unloading, and transportation of materials and products to and from the facility;
- Plant blueprints, maps, etc. showing areas of various plant operation, drainage systems, waste collection, material storage and disposal facilities, and,
- Other information available at the plant which may be relevant to the survey.

In addition to this information review, specific individuals at the plant, who may, through years of experience, have valuable insights into plant operations affecting housekeeping, should be identified. These individuals may include plant foreman and supervisors, operations and maintenance personnel, truck operators, material handlers, etc. During the subsequent survey, these individuals should be sought out and briefly interviewed for both a capsule summary of current

operations, and a historical perspective of plant operations.

Evaluation of Housekeeping Practices

Once subject areas have been identified and relevant information gathered, the actual survey can begin. The survey approach presented below will be two-phased; one being a review of plant policies and procedures, the other being a "walk-through" inspection. Areas included in the review and inspection are:

- Vehicle loading and unloading areas;
- Diked Storage Areas;
- Waste accumulation and handling areas;
- Waste storage areas;
- Raw materials storage and handling areas;
- Process area and reactor cleaning/washdown practices;
- Laboratory areas, including laboratory waste handling practices;
- Above and below ground piping systems, including vents, drains, cleanouts, valves, etc.;
- Atmospheric venting practices and scrubber operation;
- Non-point source flow contributions, including runoff, springs, and seeps;
- Previously used waste disposal sites;
- Process equipment and piping salvage area runoff;
- Controlled/permitted stack emissions; and
- Routine maintenance practices.

The list developed for a particular facility will be specific to that facility, and may include other factors not listed above. Close coordination with site personnel will assure that all major subject areas are addressed.

Notice should be taken of areas subject to obvious or previous release or spill instances. Raw materials, intermediates, final products and wastestreams are all included in this survey. Proximity of these areas to overland flow paths, drainage channels, manholes, etc., should be carefully noted. If necessary, runoff patterns for the facility should be developed as an aid in assessing potential impacts.

The release of accumulated water from diked bulk storage areas presents another area for assessment. Often, the criteria for release of accumulated material is by visual inspection (coloration, floating oil/debris, etc.). These criteria may not be appropriate where the potentially toxic substances cannot be visually detected.

Laboratory practices should also be examined, especially where they may involve the disposal of small quantities of materials on a routine or regular basis. Both analytical and research laboratories should be examined. Laboratories can often be the source of small quantities of highly toxic materials, which if improperly disposed, could have a major impact on effluent quality.

Regular maintenance, process modifications, and new process development should also be included in the survey. Timely detection of leaking valves,loose fittings, and deteriorated piping systems could have a major impact on the overall cleanliness of the facility. Corrected in a timely fashion, the impact of these areas on the final discharge from the facility should be negligible. On the other hand, if problems are not detected and corrected quickly, significant impacts are possible.

Atmospheric venting in process or material delivery lines may release toxic substances to the atmosphere. These may have opportunity to impact the effluent through atmospheric deposition on building surfaces and roadways, and subsequent wash-out during rainfall events. Accumulation of small quantities of substances over time may result in measurable releases during and subsequent to rainfall events.

Probably the largest and most noticeable area of concern involves waste and materials handling and storage. These locations are often subject to other permitting and administrative controls, such as RCRA and NPDES requirements. Therefore, housekeeping should generally be good. There is, however, a possibility that certain areas (such as final product loading) may slip through these controls. An example would be the pumping of stormwater from the tank containment area, which has been slightly contaminated by a highly toxic, nonbiodegradable substance. If such is the case, there may be a need to address these areas during the housekeeping survey.

When observed conditions are matched against the established criteria, a decision must be made whether to initiate housekeeping changes or not. To aid in this decision, it may be advantageous for the team to develop a grading checklist. The grading,

like the survey, will be subjective. It should, however, provide a basis upon which a decision to proceed with certain activities can be made, and determine how these activities may be prioritized with regard to their effect upon meeting effluent discharge limits.

Identification of Potential Problem Areas

After completing the preliminary evaluation, potential problem area identification should begin. Potential problem areas may be identified by examination of the following:

- Probability of release of a toxic material;
- Type and frequency of release which may occur;
- Quantity of toxic substances involved;
- Toxicity of substances released;
- Potential downstream impact of the substances released; and
- Effect of release on final effluent quality.

These and other factors that may be identified in the problem area should be weighed. This weighting may contain both subjective and objective elements. For instance, the likelihood of a release may be based on an operator's perception of how often tanks are overfilled (if no records are available), while the toxic effect (in weight of toxicant per mass spilled) may well be known. For example, the release of 1 unit of a highly toxic material may be more crucial than the release of 10 units of a mildly toxic material.

Included in this weighting should be some consideration of the probable effect that a release from a specific area may have on final effluent toxicity. It may be that an area identified during the survey in need of housekeeping improvements. may not have any impact on final effluent toxicity. If probable impact areas can be isolated from non-impact areas, the completion of further studies can be expedited.

Once the weighting process is complete, a relative worth may be assigned to each problem area. This may be accomplished by considering loss of productor material, perceived harm to the environment, effort needed for cleanup efforts, or other factors as may be deemed appropriate. Factoring this relative worth with the likelihood of a release will derive a relationship by which to gauge the necessity of a housekeeping improvement. Sites subject to the housekeeping study may be ranked, with those requiring immediate attention ranked above those of lesser concern. After this ranking is completed, the identification and selection of corrective measures may begin.

If the housekeeping survey identifies no deficiencies, the TRE should proceed on to the TIE component.

Identification of Corrective Measures

After potential problem areas have been identified, appropriate corrective measures for these areas must be examined. Probable corrective measures may include:

- Area cleanup; paving or containment;
- Process or operational changes;
- Material loss collection and recovery (see Appendix Section A-5);
- Chemical and biological testing of contained waters prior to release from diked storage areas;
- Increased storage capacity for contained waters to avoid toxic "slugs" to the effluent during storm events and washdowns of fire water system usage; and
- Equipment modifications or changes (see Appendix Section A-3 and A-8).

Each corrective measure identified should be capable of resolving a potential trouble spot without creating an undue burden on plant operations. Cost effectiveness and continuity of effectiveness should also be of primary consideration. For example, an initial cleanup of a product loading area may provide immediate results. However, without changing the loading procedures which resulted in the untidiness in the first place, problems would recur. In this case, the final solution would require a second stage - that being a procedural change in the way material loading occurs, or a material loss collection and recovery system.

Housekeeping practices are normally acquired or learned. They may suffer from the "tradition syndrome" - operations which have always been conducted in a particular manner, and which plant personnel are unwilling or reluctant to change. Retraining, refocusing, or re-emphasizing may be necessary to reach the individuals involved. Other times, housekeeping can be improved by initiating new methods or procedures, where established conduct has never been formalized. The process of formalization may be sufficient to generate a positive change.

Obviously, corrective measures would not be required for areas with little or no potential for affecting final effluent toxicity, although, once

identified, the measures might be implemented for other reasons. The probability of affecting a positive change by the implementation of corrective measures, as well as the willingness of plant personnel to follow through with the required changes once they have been identified should be considered.

Selection of Corrective Measures

After appropriate corrective measures have been identified, a solution must be selected from them. The basis of the selection will include level of benefit, consideration of cost, ease of implementation, and timeliness of solution.

Most housekeeping solutions will carry a relatively small price tag. This is because they will largely involve procedural changes rather than physical or equipment changes. Where physical changes are involved the cost should be balanced against the perceived benefit.

Ease of implementation should be considered in selecting an appropriate solution. Obviously, solutions which involve minimal procedural changes and require little adjustment on the part of plant personnel will generally be better received than those which require substantial changes in the way a job is conducted.

Timeliness of solution is another important consideration. Those solutions which may be initiated quickly and with a minimum of plant interruption, will create a higher level of acceptance from within the plant, and, therefore, a higher probability of success.

Implementation of Corrective Measures

Once the appropriate measure has been identified, the implementation phase should begin. This phase should be carefully planned so as to maximize the use of plant personnel and expertise, thereby positively influencing acceptance of the program. As most housekeeping improvements will include procedural (Best Management Practices) rather than physical changes, acceptance and involvement by plant personnel is imperative for the continued success of the program.

As much control as possible over the implementation of the corrective measures should be placed in the hands of plant personnel. This is important, since the continued success of the correction will not be measured by the first activity, but rather by maintaining the positive correction.

In order to confirm adequately the effectiveness of the corrective measure, toxicity tests and Phase I characterization procedures should be conducted before and after implementation. The results of these tests will be useful for comparison with the follow-up evaluation of effects.

Follow-Up and Confirmation

Once the solution has been implemented, follow-up studies should be initiated (see Section 9). In summary, follow-up on housekeeping studies would include:

- Continuation of implementation;
- Evaluation and confirmation of effectiveness on toxic releases (toxicity tests and Phase I characterization);
- Solution impact on affected operations; and
- Rigidity of continued implementation.

The goal of the follow-up is to determine 1) whether the solution as envisioned has had the planned positive effect on the toxicity of the final effluent and the management of this toxicity reduction; 2) whether the solutions were well received and easily implemented by the plant personnel; and 3) whether operations would continue to have a positive impact on toxicity reductions in the plant effluent. Follow-up studies may also help to identify additional areas of improvement which were not seen in the original study.

If follow-up studies indicate that housekeeping improvements have not resulted in the desired toxicity reductions, then alternative solutions must be developed. This may require a more detailed identification of contributing factors (Section 6), and investigation of source contributions (Section 7).

Section 4

Treatment Plant Optimization

A critical element in reducing toxicity in an industrial facility's effluent is the evaluation and optimization of the facility wastewater treatment plant. A well maintained plant, operating under design conditions, may be capable of providing an acceptable level of treatment for conventional or design parameters, and still allow toxic compounds to be released to the environment. On the other hand, the same plant may be able to handle the majority of toxics it encounters if adjustments are made which allow operation of the treatment processes at other than design conditions. The objective of this optimization is to assure that the treatment plant is operating in optimal fashion with respect to removal of its design parameters. This will maximize the probability that toxicity will also be removed.

The process of operational optimization begins with the recognition that an effluent's toxicity exceeds limits established by rule or permit. Plant operations optimization runs simultaneous with housekeeping improvements (Section 3) and chemical optimization (Section 5). The plant optimization process is depicted schematically in Figure 4.1, and its components are described in detail in the remainder of this section.

As the optimization process begins, it may be helpful to develop a checklist of parameters which bear examination. This will be specific to the plant under consideration and will be highly dependent upon the information gained from various sources at the plant. Sources of information might include plant personnel (both active and retired), design, and construction documents, and operating records (including influent and effluent monitoring information).

This section discusses the steps required to critically assess and optimize a treatment facility's operations. This discussion is general in nature, providing an overview of the operational parameters to be considered and analytical techniques which might be used. A program for the evaluation of a facility will need to be based upon conditions specific to that particular facility.

Case summaries presented in Appendix Sections A-3, A-4, and A-8 all contain some aspects of treatment plant optimization. In Appendix Section A-3, it was determined that fluctuations in *Nitrobacter* bacteria correlated with effluent toxicity, whereas, in Appendix A-4, increased retention of wastewater in the activated sludge basin would reduce effluent toxicity. In case summary A-8, the use of activated sludge from municipal treatment plants was evaluated.

Identification of Available Information

Information of interest in this evaluation will deal with the design and performance of the treatment system. Plant design information includes a description of the specific treatment units and how they are linked, design capacity and loading rates, and what the plant was intended to treat. In addition, identification of design performance criteria will prove useful in evaluating current operational performance. This information may be available from a number of sources, including system design documentation, system modification documentation, facility blueprints, plant operating and maintenance procedures and protocols, and discussions with plant personnel.

Performance information may be available for both the overall treatment process and for each of the component units. Of particular value are data on the quality of all influent and effluent streams. This may be available from monitoring reports and studies or operational logs. Some facilities even have their data in computer data bases.

After this information gathering is complete, the optimization sequence may begin. This sequence will include evaluation of the influent wastestreams, description and evaluation of the treatment system, and optimization of treatment operations. These steps are described in the following sections.

Identification and Evaluation of Influent Wastestreams

Changes in plant processes at a facility are likely to result in changes in the influent to the treatment plant. Consequently, the final wastestream may contain components which were not in the original

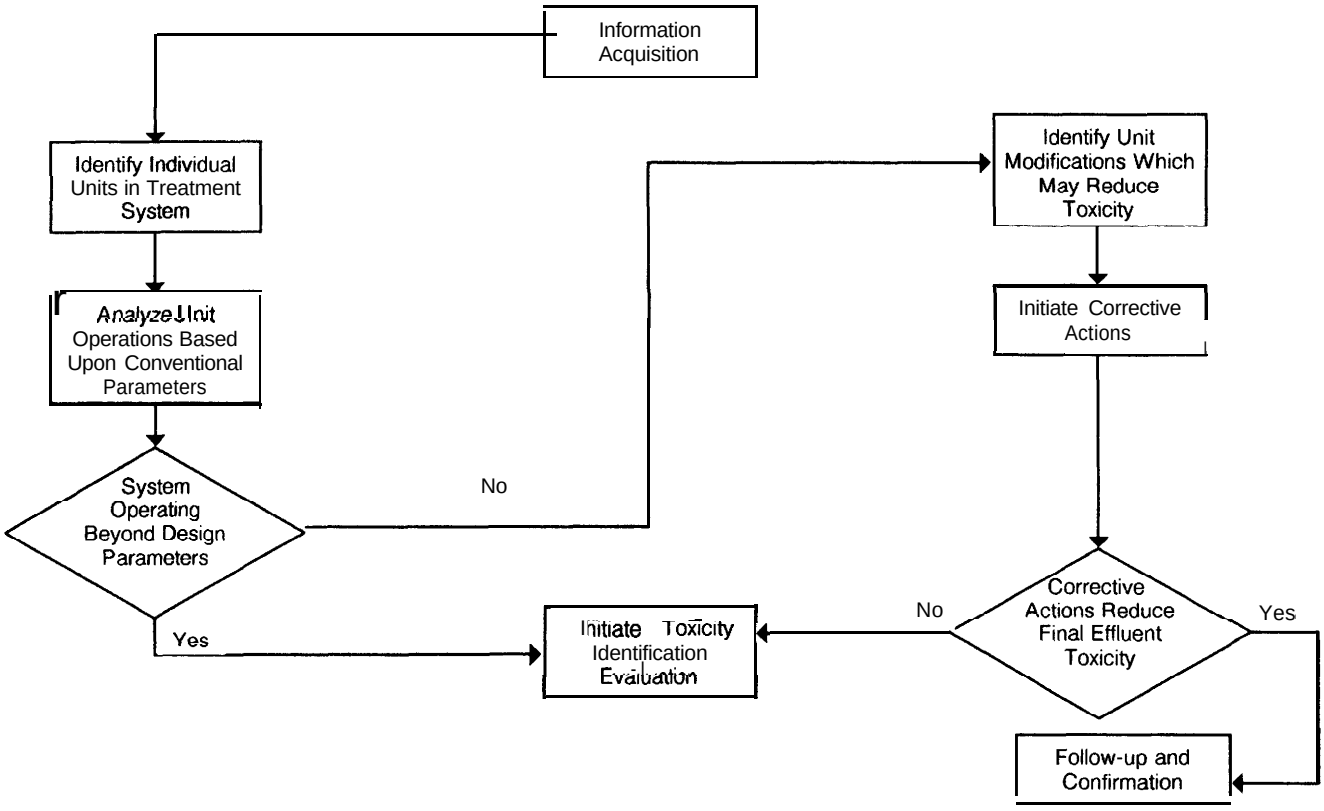

Figure 4.1. Treatment plant optimization logic flow diagram.

wastestreams at the time of treatment plant design, and which receive only partial treatment through the plant. Some components of the influent may even simply pass through the treatment system. Therefore, when evaluating current performance against design criteria, it is necessary to understand possible changes in influent quality and factor them in.

Several areas to be considered when evaluating influents and how they might have changed since treatment system design include:

- Raw chemicals or materials used in the process;
- Byproducts or reaction products produced during the process;
- Reaction vessels, valves, piping systems, overflow points, and other mechanical aspects of the system;
- Wastestreams produced, volumes, and routing paths; and
- Non-point sources.

At this stage there may be a great deal of overlap between this study and the chemical optimization and good housekeeping surveys. The survey team must be aware of this and sensitive to it. The goal at this step is to identify, define, and understand the various contributors to the individual wastestreams, without conducting detailed chemical analyses.

It also should be recognized that the pollutants causing effluent toxicity may not have been of concern when the treatment system was designed. Alternatively, the treatment system designer may have been unaware of the toxic pollutants in the influent. Possible contaminants in the raw materials should also be considered when evaluating influents (see Section 5).

Another consideration is variability in the flow and loading of influent streams. Variability in the influent may be attributed to a variety of circumstances, including changes in processes, plant or process start ups or shut downs, and production rates. Any changes from design criteria must be defined, if possible from the existing information.

Finally, the frequency at which various activities take place at the plant must be gauged. Recurring

activities, such as annual plant shutdowns, may have a significant impact on operations of the treatment facility. One would expect to find reduced loading from normal process flows during this period. However, unique wastes generated during the cleaning and maintenance of various plant components may have a significant impact on treatment plant operations. Similarly, recurring but non-continuous activities, such as boiler and cooling tower blowdowns, may add toxicity to the influent which may not be detected under some types of surveillance.

Description of Treatment System

The description of the treatment system begins by examination of the design documents and subsequent modifications. The objective at this stage is to define what types of pollutants the plant was designed to accommodate, both qualitatively and quantitatively. Parameters of interest include:

- design basis for each constituent, including variability in flow conditions and concentrations;
- treatment sequence;
- performance projections by constituents;
- operational flexibility of each process; and
- treatment objectives and projected effluent standards.

Design parameters which deserve special attention at this stage include design flow and mass loading rates. Most plants are designed to handle specific flow and mass loadings. These are usually based on loading projections, performance estimates, and permit requirements at the time the treatment system was designed. To account for uncertainty in production or design, factors of safety are usually incorporated. Many times design capacities will be exceeded in actual operations; sometimes resulting in plant upsets or pollutant pass-through. Understanding the actual capacity of the system is necessary in this analysis.

A flow schematic of the present system should be developed which indicates sources of influent waste streams, treatment steps in the process, sequencing of flows, losses within the treatment system, treatment by-products and final effluent disposition. The flow schematic should be simple, yet detailed enough to help determine whether the system, as designed, is being subjected to abnormal, unanticipated, or irregular flow and loading conditions. A tabular summary should be prepared of design capacities of each component.

Each process within the treatment system should be examined and its impact on the final effluent quality estimated. This evaluation should be made with both the actual and design considerations of the system in mind. Specific parameters of investigation include whether the unit is functioning according to design parameters and its ability to reduce non-design constituents, such as toxics. Overall plant performance will be judged through assessment of both operating and design information.

Available data on by-products of the treatment process should also be examined during this phase. Of specific interest will be solid waste (sludge) and air emissions from the facility. Information on the characterization of these by-products will aid in determining whether toxics removal is taking place in the present system. Special disposal problems resulting from these emissions should be noted as they may be affected either positively or negatively by treatment process alterations.

In addition to the design parameters, the treatment system should be evaluated as to its removal efficiency of other "non-design" parameters. For instance although activated sludge is typically designed to remove BOD, many metals and non-polar organics, potentially toxic compounds, are also removed. Removal of non-design parameters which may be toxic should be evaluated and the impact of process optimization or modification on their removal considered.

After examination of the treatment plant operations, the analyst should be able to suggest conditions under which the plant would operate most efficiently. The analyst should also be able to determine, based upon knowledge and examination of the system, where treatment failure is likely to occur, and why. This knowledge will guide further analysis into actual treatment systems operations, and ways to optimize the performance.

Analysis of Treatment System Operation

After reviewing plant loading and design information, review of actual treatment plant operation should begin. This is the step where the analyst accumulates information on actual plant operations and compares this to design, or theoretical operations to see how well the two compare. A tabular summary of system performance should be prepared as a comparison to design capacity for each component.

Two important parameters for this review are flow and mass loading. Either over or underloading may be found to be significant in subsequent evaluations. Both impact plant operations and affect the quality of effluent from the treatment works. Overloading in the plant can lead to poor treatment due to pass-

through of certain quantities of the constituent to be treated. Underloading indicates either overdesign or under-utilization of capacity. An under-utilized plant has the capacity available to treat waste streams not presently subject to treatment. Additionally underloading of BOD, a dilute waste stream for instance, may reduce treatment efficiency. Information on plant loading is normally available through records maintained at the treatment plant.

Plant bypassing **also** bears critical examination. Plant operators are often a good source of information, as it is often the operator's decision to bypass flow. Frequent bypassing may be indicative of a plant operating at or near design capacity. In addition, bypassing may be a major source of toxicity in the final effluent. Bypassing during and after heavy rainfall may allow toxic components in the runoff to be released to the receiving water without treatment. A thorough effort should be made to correlate bypass events with effluent toxicity.

Shock loads may be released during normal cleaning and maintenance activities, or may occur as a result of a spill, process upset, etc. The frequency and impact of shock loads on the treatment plant should be evaluated through review of plant records (Berthovek and Fan 1986). Each occurrence will have a unique impact on the treatment process. These may show little or no effect on the process, may result in collapse of the treatment performance, or may be some middle ground. The frequency and duration of such loadings, and the time required for complete treatment recovery, should be determined. Again, a thorough effort should be made to correlate shock loading and process upsets with toxicity data.

Plant operations should be critically reviewed. Operating procedures which differ significantly from the original design may result in effluent quality different than anticipated. Variations between shifts may also show significant fluctuations in effluent quality. Operations may have been altered, out of necessity, due to changes in process or influent wastestreams. Other times, plant operators may have initiated changes out of convenience which unintentionally impact treatment effectiveness. These changes or alterations should be documented, and their impact on final effluent quality assessed.

Operation and performance of the intermediate stages in the treatment process should be as closely scrutinized as the overall system effectiveness. For example, toxicity reduction through a primary clarifier, which is presumably a function of solids removal, will continue only as long as solids are removed on a regular or continuous basis. However, if solids are allowed to accumulate in the clarifier, toxicity may worsen, due to ineffective solids removal or release of toxics into the water phase.

It is important to recognize that the quality of the final effluent is not always attributable to influents. Some treatment processes may result in higher toxicities rather than lower toxicities. Some examples of this phenomenon are the generation of toxic biological endproducts, the addition of toxic chemicals as treatment aids (e.g., cationic polymers), and the production of toxic chlorinated organics during the disinfection process. Chemistry within each process should be examined, especially those which are subject to chemical additions and enhancements.

Implementation of Corrective Action

The objective of system optimization is to identify changes in plant operations which will result in a higher effluent quality without significant modification of the facility (physical) or the chemical/biological processes.

During the definition and evaluation phases, areas which may not be operating at an optimal or design level, and those which may be improved through minor modification and adjustments in plant operations will have been identified. Corrective measures must now be defined and implemented, such that at the completion of the process, plant operations are as good as they can be, given present plant makeup and operations.

One area to examine is mass and flow loading rates. These can be adjusted by water conservation, retention, inflow controls, and waste stream mixing. Overloaded plants may be made to operate more efficiently by "bleeding" certain contaminants into the headworks of the plant. This may be possible through taking advantage of existing system holding capacities, or through rerouting of streams to provide holding.

Modification of the flow sequence through the treatment plant can sometimes significantly affect overall treatment. If piping systems, pumps, etc. are already in place, such that only minor redirection is needed to effect the change, resequencing may be an expedient means to optimize plant performance and improve effluent quality. One example might be to convert two tanks from parallel to series operation.

Redirection of individual flow paths may be another way to optimize plant performance. Certain wastestreams may be treated more effectively by some processes than others. Similarly, the same process may afford different levels of treatment to various waste streams dependent upon such conditions as loading rate, influent concentration, retention times, and chemical feed rates. It may be possible to improve overall effluent quality by adjusting plant operations according to the source and composition of the influent waste stream. An

example of this might be segregation of the influent stream to treat only those streams containing metals in the precipitation process; at lower flows and higher concentrations, metals removal will be more efficient.

Batching or sequencing of flows may be other means to optimize performance. At a facility with a variety of different wastestreams, a singular plant operated continuously may not be capable of providing the desired level of treatment. If, however, waste streams could be held for a scheduled strategic release and plant operations could be adjusted to provide the best level for the individual waste stream(s) involved, effluent quality may be dramatically improved. This would be particularly applicable to the handling of peak loads or non-compatible wastestreams. Sequencing of wastestreams would involve influent control, such that waste from one process passes through the treatment facility separate from wastes from other processes. This would allow adjustments to be made in plant operations to accommodate the individual wastestreams involved. Batching or sequencing may also be useful when mixing of process waste streams may act to mitigate toxicity (e.g., an acid and basic waste stream).

Increasing the residence time of the effluent in the treatment process may facilitate degradation and reduce toxicity. If excess storage space is available on site, residence time could be increased by routing effluents through these areas. In addition, the use of baffles may increase residence time in areas already allocated.

Finally, consistency of plant operation must be maintained. Variations between shifts, over manufacturing and production cycles, etc., must be reduced to a minimal level. This may be extremely difficult at some facilities with widely variable processes and production schedules.

When possible, toxicity testing should be utilized to determine the effect of optimization on determination of the efficiency of toxicity reduction. Both the influent and effluent should be tested and the effectiveness of the various optimization activities determined. Phase I characterization procedures can also be used to gain additional information on the effectiveness and result of implementation.

Optimization steps may be modeled either mathematically or in the laboratory, prior to system adjustments, These steps may help to streamline the optimization process, and reduce or eliminate trial and error activities. Additionally, if modifications are planned for which the outcome is uncertain and which involve some element of risk, modeling may provide the degree of certainty needed to either proceed with the change over, or to investigate other alternatives.

Follow-Up and Confirmation

As with any system change, ***once*** the change has been completed, the effect must be assessed. This will come through follow-up and confirmation studies. Even if changes made in plant operations have the desired effect on effluent quality, periodic follow-up will be required to confirm that the toxicity reduction is maintained.

It is also important to note that changes in treatment operation that result in a reduction of effluent toxicity must not do so at the expense of other limited parameters. For example, a change in treatment operation that results in a reduction in effluent toxicity is not necessarily desirable if it means that the facility's TSS limit will be violated.

Section 5
Chemical Optimization

Chemical optimization, when utilized in a TRE, is a process which occurs simultaneously with housekeeping and treatment plant optimization. The initial steps of the chemical optimization process are as follows:

- Review the use of chemicals in manufacturing process to insure that only the amounts of chemicals needed are used.
- With respect to their concentration in the final effluent, review all available aquatic organism toxicity data for raw materials and process chemicals and their contaminants and by-products (known or potential). Emphasis should be given to data for the species, genera and/or family of aquatic organism used to test the toxicity of the effluent.
- Review biodegradability information (aqueous) for raw materials and process chemicals and their contaminants and by-products (known or potential).
- Determine if less toxic/more degradable alternatives are appropriate, and whether or not they exist.

The goal of the chemical optimization process is to identify simple solutions to the toxicity in the effluent. This process is a first cut at reducing toxicity by removing possible causative agents. In general, no cause and effect relationship will have been established between the chemicals being removed or substituted and final effluent toxicity. However, there may be some evidence these chemicals can cause toxicity and that their removal will help alleviate the problem at the facility. This evidence may come from experience at other facilities of similar type or from reported toxicity in the technical or scientific literature. Figure **5.1** depicts the chemical optimization flow logic. Case summary (Appendix) A-4 provides the only true chemical optimization step found in the case summaries reviewed. Chemicals used in the manufacturing processes were reviewed for potential toxic components and chemical application techniques were implemented to optimize chemical usage. Similar to this case study, the investigators in case summary A-l reviewed data on all possible raw ingredients to determine sources of toxicity.

Information Gathering

There are two important sources of information for the chemical optimization study. These are process design and operating information, and MSDS. Each provides valuable information for the conduct of the study.

Process design and operating information will provide a definition of unit operations, manufacturing processes, and chemical uses and additions. Where possible, this review should include:

- Examination of wastestreams produced by specific production processes;
- Chemicals and raw materials and their contaminants and by-products used in the process;
- Chemicals used in treatment;
- Chemicals and material use rates;
- Percentage of chemical in the final product; and
- Chemical reuse and waste recycling activities.

This information will be useful in defining which processes and attendant wastestreams are most likely to influence toxicity in the effluent. Also during data collection activities, a comprehensive list of MSDS should be assembled. These should be available through the facility health and safety coordinator, or the person alternatively responsible for OSHA compliance.Information contained in the MSDS will aid in the identification of probable sources of toxicity, and will assist in defining the chemical makeup of certain chemicals suspected of adding toxicity to the effluent.

It is important to remember that the chemical concentration of interest is that which is in the

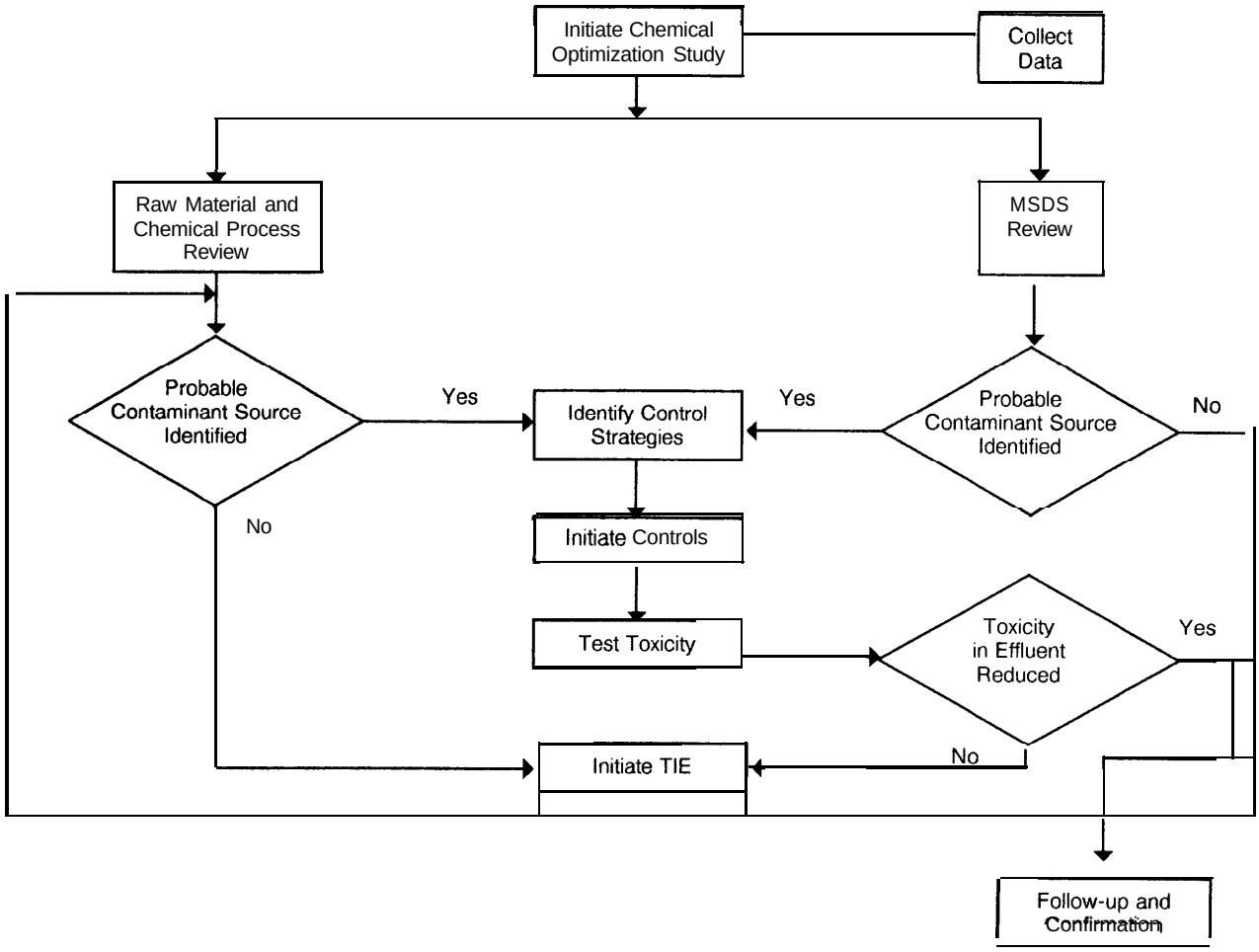

Figure 5.1. Chemical optimization flow chart.

sample tested for toxicity (i.e. the final effluent). Influent concentrations are only of use when the compound is treated to a level below analytical detection but remains present at a level toxic to the test organism (in this case the chemical's presence in the influent acts as a marker).

Process Chemical Review

In this review the role of each chemical and the amounts used in the industrial process are examined. Many compounds are used in manufacturing processes in an non-optimized manner. The reasons for using the amounts chosen are many times based on application, not science. Each process chemical usage amount should be questioned and suppliers called in to consult on the application amounts. If the material is not in the process effluent, it cannot contribute to the toxicity of the WWTP effluent.

The steps in the chemical process optimization include:

- Making a list of all chemicals used;
- listing the quantities used (e.g. per month);
- determining the pounds used per unit of production; and
- determining the pounds used per gallon of water discharged.

For each chemical identified, the questions that must be asked include:

- What purpose does this chemical serve?
- Can the amount used be reduced?
- Can the chemical be reused?
- Does it have to be discharged?

At the completion of the review process, the analyst will have developed a clear picture of how the plant operates and how these operations may impact final effluent toxicity.

Review MSDS Information

In this process the MSDS information is reviewed and any aquatic toxicological information is noted. Suppliers should be asked for the aquatic toxicity information if the MSDS does not list it.

The steps of the MSDS review include:

- Obtain an MSDS for all process chemicals discharged.
- MSDS sections providing information on aquatic organism toxicity should be highlighted
- Examine the Hazardous Ingredient section and note the "hazardous substances" listed.
- Look at the disposal section of the MSDS and note whether or not the material is a hazardous waste.
- Look at the environmental section of the MSDS and note if any acute toxicity (e.g. LC_{50}) data for aquatic biota are available.
- If no aquatic data are available, ask the supplier for aquatic toxicology information.
- Obtain and examine biodegradability information for each suspected compound.
- Categorize all chemicals by hazard and irritation potential and use standard references to obtain aquatic toxicity information, if possible.

For example, if the biocide ANYCO 1111 SOME-BIOCIDE, a cooling water treatment additive, is noted as being used by an industry undergoing a TRE, the MSDS for this material would be obtained (ANYco Chemical Company) and reviewed. In this example case, the MSDS has a section (MSDS Section 6) on Toxicological Information. All data presented in this toxicological section of the MSDS are found to be for humans and animals. However, further search of the MSDS would detect the statement that the product is toxic to fish (MSDS Section II, Spill and Disposal Information). Then in the following section on Environmental Information (MSDS Section 12) actual aquatic toxicity data would be found. The data given in this section of the MSDS for ***Daphnia magna*** (an LC50 value of about 0.15 mg/L) and Fathead Minnows (an LC_{50} value of 0.12 mg/l) indicated significant toxicity to aquatic organisms. No biodegradation information is provided in the MSDS. Therefore, this material would become listed as a "suspect" causative agent and targeted for further examination in the TRE process.

After this information is reviewed, the following questions should be asked:

- Are there any less toxic and more degradable products available?
- Can most serious problem chemicals be isolated from the wastestream or treated prior to mixing with the wastestream?
- Were toxic chemicals used in high quantities (i.e., at or above known effect concentration) identified during the Process Chemical Review?

Chemical Composition Screen of Incoming Raw Materials

In this part of the process, the raw materials that are used to make the final product are examined to determine if a chemical is, or could be, removed during the manufacturing process and enter the wastestream, If such a chemical is found, the same information obtained for the processing chemicals outlined above is determined for the raw material intermediate.

The steps in this process are not as direct as those discussed above. This segment is highly individualized to the industry involved.

The questions to be answered include:

- Are there chemicals that are removed?
- What are they?
- How much is removed?
- Are these chemicals degradable or toxic?
- Why are these chemical(s) present?
- Is it necessary to remove them?
- Can less onerous alternates be found?

Outcome of the Chemical Optimization Phase

As a result of this sequential process the following information should now be available:

1. A list of all chemicals used in processing and manufacturing the product. Included will be the

amounts used, why the compounds are used, and if optimization has taken place.

2. MSDS and literature reviews (if needed) will be on file for all process chemicals.

3. A list of all chemicals and raw material purchased on a monthly basis and a record of production volumes during the same time period.

This information may be valuable if a source investigation is conducted. For example: if the characterization/identification tests show that copper is a toxic problem, any chemicals shown to contain copper should be investigated as potential sources of the toxicity.

Experience has shown that once several TREs have been conducted on several industries of the same Standard Industrial Classification (SIC) code, some compounds will become "known" as problematic. These "known" compounds can be categorized and more accurate toxicity/biodegradability determinations made. Once found toxic, the first information the industry conducting the TRE should look for is whether or not these compounds are used. As these "problem" compounds are identified, letters from the discharger to supplier asking that they be reduced or removed from any "Tradename" products should help eliminate some of the toxic compounds known to be used by the industry.

Data Analysis

During the chemical optimization phase, no sophisticated analysis need be performed. However, later in the TRE process, it may be useful to apply regression and cluster analysis techniques in an attempt to correlate chemical usage, water usage, known toxicity, and other numerical factors. This type of detail and sophistication might be done if, after the TRE, no other means of relating chemical usage, flows, and other factors to toxicity exist.

Follow-Up and Confirmation

The information gathered during the chemical optimization step in the TRE can yield a great deal of useful data. Chemicals that should not be excluded include those used in the manufacturing plant that may not be used in the manufacturing process. Water treatment compounds are an example of such a chemical.

The significance of the Chemical Optimization Process is that for many facilities it may represent a useful approach for identifying the source of potentially problematic chemicals, or assist in the confirmation of the suspected causative agent of effluent toxicity. Ignoring this step could result in modification of a WWTP when a simple chemical substitution could convert an unacceptably toxic effluent into a non-toxic one.

Section 6

Toxicity Identification Evaluation (TIE)

The third tier in the generalized methodology for conducting a TRE at an industrial facility is the toxicity identification evaluation (TIE). The overall objective of a TIE is to identify the specific chemical(s) responsible for effluent toxicity. In some cases the results of this evaluation may only allow the investigator to determine the physical/chemical characteristics of the causative agents of effluent toxicity. In either case, valuable information will have been obtained for either the evaluation of treatment methodologies or for the investigation of the source(s) of final effluent toxicity.

In TREs where Tier II evaluations of facility housekeeping, treatment plant optimization, or chemical optimization have indicated potential causes or sources of toxicity, application of the TIE procedures will usually still be needed to provide additional "weight of evidence" and confirmation of these suspected causes or sources. It can be expected that in most TREs at industrial facilities the initial two tiers of the protocol described in this document should take no longer than two to three months or approximately 25-30% of the total time scheduled for the TRE. Effluent sampling and application of the initial Phase I TIE procedures described in this section can in most cases be conducted concurrently with these facility information gathering and operations assessment steps. This will allow for more direct confirmation of any solutions or reductions in effluent toxicity brought about by tier II evaluations and streamline the TRE being conducted at a given facility.

The general strategy for performing a TIE consists of three phases and is presented as a flow chart in Figure **6.1.** The first phase is the performance of toxicity characterization tests which are designed to determine the class or group of the compound or chemical causing effluent toxicity (i.e. the toxic chemical(s) physical/chemical characteristics). The frequency that these characterization procedures are performed must be based on the nature and variability of the effluent toxicity as observed in the results of these tests. It is highly unlikely that it will ever be sufficient to evaluate only a single sample.

The second phase of a TIE is to perform analyses which are designed to identify the specific toxicant(s) in the final effluent. The number and type of chemical analyses performed will be based on the results of the Phase I characterization tests. The third phase of a TIE is the confirmation of the suspected toxicants identified in Phases I and II. In cases where phase II identification was not successful, Phase III confirmation of the physical/chemical characteristics determined by the Phase I tests should still be conducted. This is especially important where treatability studies are to follow the TIE and modifications to, or construction of additional treatment facilities are determined to be necessary based on the results of the TIE and the treatability studies.

Toxicity identification evaluation procedures are described in detail in ***Methods for Aquatic Toxicity Identification Evaluations Phases I-III*** (Mount and Anderson-Carnahan, 1988), and can be summarized here in terms of the application of these methods for an industrial facility TRE. It should be noted that the case studies contained in this document were, for the most part, conducted prior to the completion of these TIE methods and utilize this approach to varying degrees. As more experience is gained and further research is completed modifications and enhancements of these methods will be made and documented.

Phase I - Toxicity Characterization Procedures

The Phase I toxicity characterization procedures involve the use of a battery of bench-top tests coupled with toxicity tests to determine the physical/chemical class or group of the toxic components in the effluent. The purpose of performing these procedures is to focus the search for the causative agents of effluent toxicity to compounds of a known class or group. This information greatly expedites the subsequent Phase II toxicant identification analyses by narrowing the

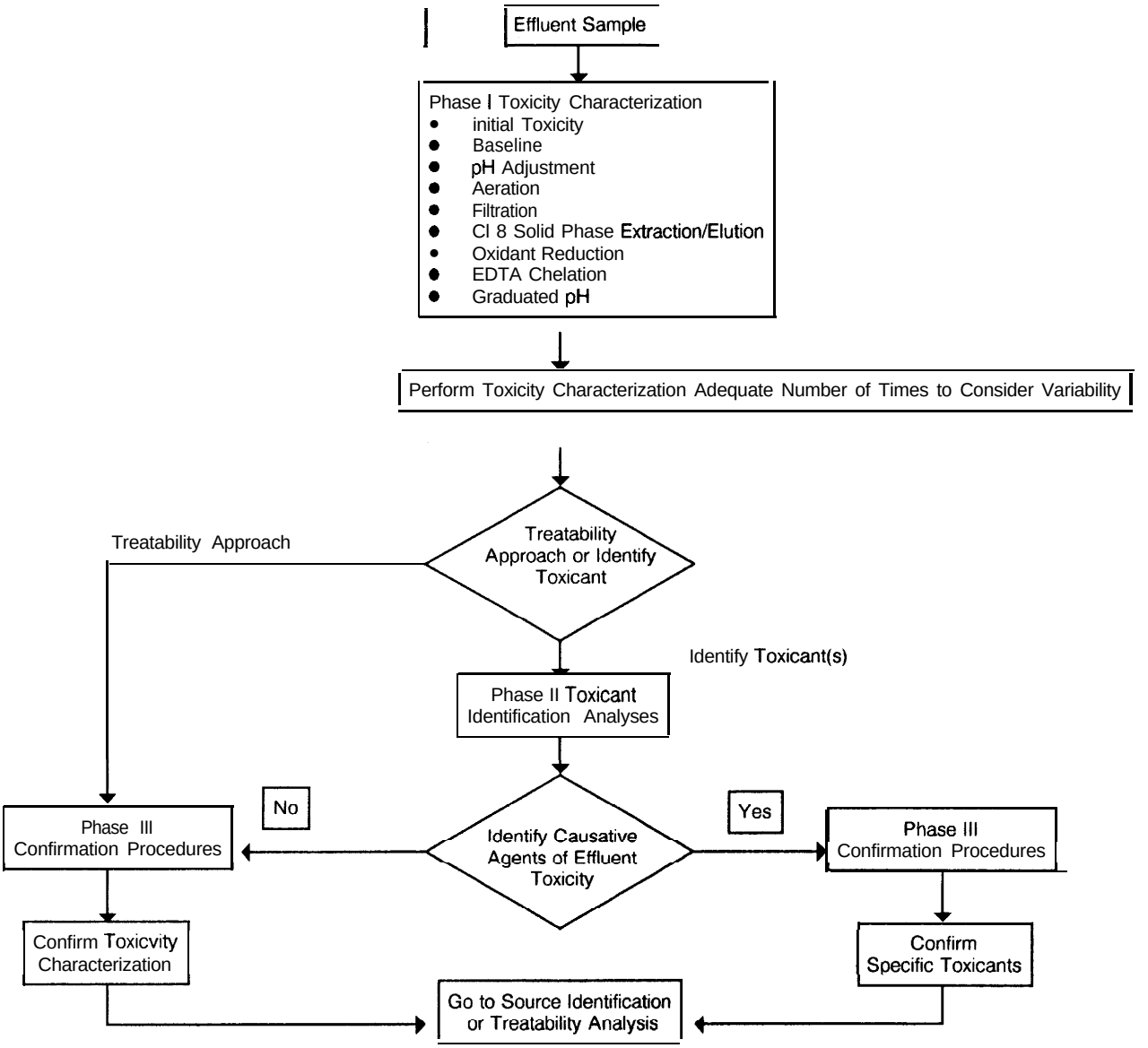

Figure 6-1. Toxicity Identification Evaluation (TIE) strategy flow chart.

range of possible toxicants and is also useful for .the treatability studies discussed in Section 8.

Initially, an aliquot of the whole effluent sample is tested for the baseline toxicity. If the sample is toxic, aliquots of the sample are run through the battery of phase I tests which are designed to remove or render neutral (biologically unavailable) various classes of compounds and the corresponding toxicity of these "treated" aliquots is measured. Presently, these procedures use acute toxicity tests to measure the toxicity of the effluent and the treated aliquots. Methods which utilize chronic toxicity test endpoints to track the toxicity of the effluent sample following characterization tests are being developed.

Toxicity characterization procedures, and chemical specific analyses, produce snapshots of what is causing toxicity in a given sample. Only those toxic chemicals which are present when the samples were collected will be characterized or identified. This would not pose a problem if the cause of the effluent toxicity remains constant over time. In such a situation, one sample, regardless of when it was collected, would **be** adequate for characterization purposes. However, if the cause of an effluent's toxicity varies over time (or, for the purposes of toxicity treatability studies, if the concentration of the toxicants vary over time) the analysis of only one sample will clearly be insufficient to account for this variability. In such a situation, the frequency of sampling and analysis must be designed to ensure that all of the causes of toxicity are detected and characterized. Therefore, it will usually be the case that Phase I effluent characterization procedures will need to be conducted on a number of effluent samples to ensure that the variability in the effluent toxicity is determined.

Components of Variability

The toxicity of an effluent can vary both quantitatively and qualitatively. Quantitative variability is a measure of how the magnitude of the toxicity changes over time (e.g., ranges from 3 to 10 toxic units). Qualitative variability is a measure of how the underlying causes of effluent toxicity change over time (e.g., toxicity caused by high copper concentrations at one time and high pentachlorophenol concentrations at another). Both of these components of variability may be (and frequently are) present in an effluent. Therefore, a toxicity characterization sampling program and subsequent treatability and/or chemical analysis programs must be designed so that both components of variability -the magnitude and the underlying causes - are assessed by the evaluation.

Determining the Number and Timing of Samples

The magnitude, frequency, and type of variability in toxicity exhibited by an effluent will determine the number of samples which must be evaluated by the toxicity characterization procedures. In general, the number and timing of samples must be sufficient to capture both the pattern of variability exhibited by the effluent and all of the toxicants which contribute significantly to effluent toxicity over time. There are at least two methods for assessing the type and pattern of variability in an effluent's toxicity.

Again, the most definitive approach is to repeat the battery of Phase I characterization procedures a number of times on freshly collected samples of effluent until the type and pattern of variability is identified. In this way the variability can be assessed concurrently with the determination of the physical/chemical characteristics of the effluent toxicity. This should be a very accurate approach because the results of the characterizations are used as the point of comparison; if variability is observed, it is real variability. It is necessary to repeat the characterization procedures a sufficient number of times to ensure that both quantitative and qualitative variability are understood prior to preceding to either treatability studies or Phase II toxicant identification analyses.

A second less direct approach for estimating the type and magnitude of the variability in final effluent toxicity is to use the existing data on effluent toxicity which is gathered in Tier I of this protocol. If several species of aquatic organisms were routinely used to test the toxicity of a given effluent the responses recorded from a number of samples could show that the cause of effluent toxicity changes over time. The amount that each species' sensitivity to the effluent changes from one sample to the next provides an indication of the magnitude and frequency of quantitative variability in the effluent toxicity. The manner in which the relative sensitivities of the various species changes over time may provide an indication of the occurrence and frequency of qualitative variability. If the variability in an effluent's toxicity is totally quantitative in nature, the magnitude of each species' response would change over time, but all species tested should maintain the same relative sensitivities. On the other hand, if the species' relative sensitivities also change over time, there is evidence for qualitative effluent variability.

The use of multiple species to assess qualitative variability is based on the observation that different species exhibit different sensitivities to various toxicants in effluents. For instance, for water with the same hardness, the fathead minnow is considerably more sensitive to cadmium (LC_{50} = 30.5 µg/L) than the amphipod, *Gammarus pseudolimnaeus*, (LC_{50} = 55.9 µg/L) (U.S. EPA. 1985b); whereas for copper the situation is reversed with G. *pseudolimnaeus* (LC_{50} = 22.1 µg/L) being more sensitive.than the fathead minnow (LC_{50} = 115.5 µg/L) (U.S. EPA, 1985c).

It should be emphasized that this indirect approach has several potential sources of error which could lead to inaccurate conclusions (e.g., if data from effluent samples with different levels of hardness are compared). Therefore, it is recommended that the data from the Phase I characterization tests be used as the primary basis for determinations of effluent variability and the relative responses of the toxicity test species should be used with caution as secondary, supporting evidence.

Toxicity Testing Procedures

In the performance of a toxicity identification evaluation, it is essential to select a toxicity monitoring tool which is sensitive enough and has similar toxicological responses to the designated TRE target. In general, this criterion will lead to the use of an aquatic organism toxicity test, since the designated target will usually be expressed as a whole effluent toxicity permit limit. The actual selection of the toxicity test organism for the TRE may or may not be specified as an NPDES permit condition or in an administrative order issued by the regulatory authority. This factor, to a certain extent, will drive the choice of the species and the test to be used in the TRE. *In* other cases the guidance may not be specific, and the discharger may have more discretion in the selection of the TRE monitoring tool. However, pertinent information may be available to aid in the selection process. For example, if the TRE was triggered by an effluent toxicity biomonitoring monitoring requirement, the results should prove valuable in identifying a sufficiently sensitive test organism. Normally, several aquatic organisms would be utilized in this monitoring and the most

sensitive of these should be an adequate toxicity indicator in the TIE.

It is important to differentiate the objectives and requirements for toxicity testing in TIEs from those of the overall TRE and the NPDES permit biomonitoring requirements. Usually, the biomonitoring requirements that trigger a TRE will be specified as the toxicity tests to be used in the follow-up monitoring and confirmation of the reduction in effluent toxicity (Tier VI). These permit biomonitoring requirements and the associated water quality-based whole effluent toxicity limits are derived in order to be protective of State water-quality standards. Achievement of the desired effluent toxicity reduction to meet the TRE objective can only be demonstrated by utilizing these same biomonitoring tests and specified toxicity test endpoints (LC_{50} or NOEL). If an effluent exhibits both acute and chronic toxicity the TRE solution or control method must ensure that all limits will be met. For the purposes of TIEs certain modifications of appropriately sensitive toxicity tests can be used in order to achieve the objectives of the particular phase of the TIE being conducted. However, the investigator should never lose sight of the objective of the TRE: to reduce toxicity to acceptable levels for the permit biomonitoring species. Thus, there must be a demonstrated toxicological relationship or correlation between the permitted species and the TIE test species.

In addition to sensitivity comparable to the toxicity test specified for permit monitoring, other criteria in selecting a toxicity test for the TIE should be speed and cost. In most cases conducting characterization procedures will require the performance of a relatively large number of toxicity tests. For this reason, tests species which are easily cultured and relatively inexpensive should be considered first. If a sensitive test species which is also convenient cannot be found, it may be possible to modify a sensitive test so that it becomes more rapid and less expensive. Possible modifications for the purpose of TIEs include the use of shorter exposure times, fewer replicates, fewer organisms per replicate, fewer exposure concentrations, and perhaps timed lethality endpoints. Since modifications of this nature involve concessions to the standard quality assurance and quality control procedures for toxicity testing, special care must be taken to ensure that the tests results are not compromised and are of sufficient accuracy for the specific purpose for which they are used in the TIE. A more detailed discussion of this subject is presented in the EPA Phase I Toxicity Characterization Procedures document.

As stated previously, the procedures described in the TIE methods manual (EPA, 1988) are only designed to utilize acute toxicity tests. However these TIE procedures can be used in situations where either acute or chronic toxicity triggered the TRE. In order for the current TIE methods to be applicable for achieving a chronic toxicity target there must be measurable whole effluent acute toxicity present to enable the characterization of the toxicity and the identification of the toxicants. Use of the more easily performed acute test in situations where chronic toxicity is the most limiting requires the assumption that the acute and chronic toxicity of the effluent are caused by the same compound. This assumption can be validated in the Phase III confirmation step which correlates the concentration of the toxicant (identified in Phase II) with both the acute and chronic toxicity measured in the same sample.

If it is not possible to utilize the current TIE methods with acute toxicity tests, then Tier II evaluations, Tier IV source investigations, and Tier V treatability studies can all still be carried out using EPA procedures for chronic toxicity testing (Horning and Weber, 1985) to achieve the TRE objectives. In cases where measurable acute toxicity is present and the TIE methods are used to identify the toxicant and to select a toxicity control method, chronic toxicity tests would then be used in the Tier VI follow-up monitoring and confirmation of toxicity reduction,

Another concern in the selection of a toxicity test is the presence of qualitative variability. If the causative agents of toxicity change over time, it may be necessary to simultaneously use more than one sensitive monitoring species (i.e., a sufficient number of species to detect all of the expected toxicants). If one species is not sufficiently sensitive to all of the toxicants over the range at which they are present in the effluent, then the use of an additional monitoring species for the TIE would be indicated. While this may be a concern in certain cases, it should be emphasized that variability in the causative toxicant will not always necessitate the use of several monitoring species. As long as a single species of test organism is sensitive to each toxicant at the concentration range found in the effluent, that species can be used.

Description of Characterization Methods

As previously mentioned, the objective of a toxicity characterization procedure is to narrow down the search for feasible treatment methods and/or methods of analysis to identify the causative agents of effluent toxicity. This is accomplished by dividing an effluent into a variety of fractions and then determining which of these fractions is toxic, or by isolating and inactivating a specific class of toxicants. Theoretically, there are a large number of schemes which could be devised based on fundamental principles of chemistry and physics to characterize an effluent. However, the restraints which arise due to the use of toxicity tests as indicators of which characterization tests alter the

toxicity complicate the development of a logical, broadly applicable procedure. For this reason facilities faced with conducting a TRE can benefit from detailed guidance on the methods that can be used for toxicity identification evaluations. While flexibility in the design and selection of characterization procedures is attractive it should be recognized at the outset given a TRE that the information needed to choose the best scheme is not readily apparent. Therefore to avoid each facility having to expend the time and cost to develop methods for conducting TIEs, detailed documentation of a characterization scheme has been prepared. This standardized characterization procedure has proven very useful in many TIEs conducted to date and will be described in the following paragraphs.

Some of the case studies contained in the appendix to this document were conducted prior to the availability of the Phase I methods and relied on other characterization schemes. One of these was first developed by Walsh and Garnas (1983) and uses a sequence of resin adsorptions and chemical extractions to divide the effluent eventually into classes of chemicals. This approach was a forerunner in concept to the EPA recommended procedures. These methods may be useful as subsequent Phase I tests in cases where the experience of the investigator allows for their modification for application to a given effluent. However, for use as an initial approach for characterization of effluent toxicity a great deal of preliminary development of methods and laboratory procedures would need to be conducted by the investigator at a given facility.

In the context of this discussion, the characterization procedures described in the Phase I document are the most germane. In this procedure, individual aliquots of effluent are subjected to seven physical/chemical characterization tests. Each test is designed to remove or neutralize a specific category of toxicants. Following the performance of each test, any change in effluent aliquot toxicity is determined, using short-term, inexpensive acute toxicity tests whenever possible. The toxicity attributable to the removed or neutralized group of compounds is calculated by subtracting the treated aliquot toxicity from the baseline toxicity of the effluent. Therefore, the first characterization test is a determination of baseline (unmanipulated) effluent toxicity. The six remaining characterization tests are as follows:

1. *Degradation Test* – to determine how much toxicity degrades over time (also establishes acceptable sample holding time and conditions).
2. *pH Adjustment Test and Graduated pH Test* – to determine the effect of pH manipulation on effluent toxicants and the effect on causative agent toxicity.
3. *Filtration Test* – to determine toxicity associated with filterable material or toxicants that can be made insoluble through pH change.
4. *Aeration/pH Adjustment Test* – to determine toxicity attributable to oxidizable or volatile compounds or those compounds that can be made volatile or oxidizable through pH change(pH adjustment helps define the acidic, basic, and neutral character or the oxidation state of these toxicants).
5. Solid Phase Extraction/pH Adjustment Test – to determine toxicity attributable to non-polar organic and metal chelate compounds or those compounds that can be made non-polar through pH change (pH adjustments help define the acidic, basic, and neutral character of these non-polar toxicants).
6. *Oxidant Reduction Test* - to determine how much toxicity is attributable to oxidants or certain electrophiles.
7. EDTA Chelation Test – to determine how much toxicity is attributable to certain cationic toxicants such as heavy metals.

It should be noted that in order to accurately characterize an effluent using the Phase I method, all of the tests should be performed. Each test is designed to consider a different question and rigorous conclusions can only be formed when the complete battery of tests is conducted. As discussed previously, the characterization tests should be performed a suffkient number of times to ensure that variability in the cause of effluent toxicity is addressed. In addition, it is recommended that the results of the complete battery of tests be considered together when interpreting the data. Consideration of all results, both positive and negative, will help define the nature of the causative agents.

Quality Assurance/Quality Control

As in all studies, it is imperative that a QA/QC program be implemented for the toxicity characterization procedures. Such a program must address the performance of the chemical and physical separations as well as the toxicity tests. Detailed guidance of QA/QC for effluent toxicity characterizations is presented in the EPA Phase I-III document.

Phase II – Identification of Specific Toxicants

The aforementioned toxicity characterization procedures are designed to identify classes or groups of compounds contributing to effluent toxicity. With that information, a discharger may decide to attempt to identify the specific toxicants in these classes. A

successful identification will facilitate the selection of treatment options and/or the identification of the ultimate source(s) of toxicity.

Identification of specific toxicants has the greatest chance for success and is the most cost-effective if it is based on the findings of the toxicity characterization program. Such a plan would perform only those chemical analyses which could identify specific toxicants of the type expected in the flagged toxic characterization classes. For instance, if the non-polar neutral organic fraction was identified as the most toxic, emphasis should be placed on performing chemical analyses on the neutral non-polar organic compounds in the effluent. In this case, there would be no need to spend time and money on analysis of acidic or basic organics or for inorganics.

The number and timing of specific chemical analyses which need be performed should be geared to the expected qualitative variability in effluent toxicity. Guidance should be available concerning this issue from the results of the previous effluent monitoring and Phase I toxicity characterization data and results. However, it is important to recognize that the fewer the number of samples evaluated, the higher the uncertainty that all of the causes of toxicity have been completely identified. The Phase II methods document provides more detailed guidance on available methods of analysis and interpretation of results.

Phase III – Confirmation of Iden tifica tions

Regardless of whether the identification of toxic causative agents progressed to single chemicals or stopped at classes of chemicals or physically/chemically defined classes of compounds to be used to determine a treatment method, it is desirable to confirm these findings. This can be accomplished in several ways depending upon the specificity of the identification (Personal Communication, L. Anderson Carnahan, April. 1987). The EPA Phase III document addresses this issue in detail.

If single chemicals have been identified as the cause of final effluent toxicity, there are several approaches to confirmation:

1. toxicological literature data, for the toxicity test species which has been used, are available for this chemical, a comparison can be made between the observed concentration in the effluent and its reported toxicity. If the effluent concentration is at a level consistent with the effluent toxicity based on the effect concentration, confirmation is supported.
2. Toxicity tests can be performed with a control water. similar to the effluent in its chemical make-up) spiked with the same concentration of suspect causative toxicant(s) as in the effluent sample. If the results of the spiked control water toxicity test approximate the effluent LC_{50} or NOEL, confirmation is supported.
3. Effluent samples which have been treated to remove toxicity can be spiked with the suspected toxicants at their original concentration in the effluent. If the same degree of toxicity occurs at the concentration originally found in the effluent, confirmation is supported.
4. If a water quality parameter is known to alter the toxicity of a suspected toxicant (e.g., pH on pentachlorophenol), the effect of varying that parameter on the toxicity of an effluent sample can be evaluated. If the toxicity varies in the expected manner, confirmation is supported.
5. A number of species can be simultaneously exposed to the effluent and the resulting species sensitivities ranked. If, for the same species, literature values or results for control water spiked with the suspect causative toxicant(s) indicate the same ranking, confirmation is supported.
6. As the toxicity of the effluent varies over a number of samples, compare the concentrations of the suspected toxicant in those samples with toxicity test results. If a significant correlation is observed, confirmation is supported.
7. Some chemicals produce unique and discernable effects in aquatic organisms. If the observed symptoms match the known effects of the suspected toxicant (as observed in a spiked control water toxicity test), confirmation is supported.
8. Elimination of toxicity upon removal of the suspect toxicant(s) from the wastestream supports the study conclusions.

This is not an exhaustive list of possible confirmation methods. No single method would produce conclusive evidence and, therefore, performance of several is advisable to provide a weight of evidence. If the TIE is halted following Phase I characterization, to pursue a treatability approach confirmation should still be undertaken. This will ensure that the treatment option selected will adequately and consistently remedy the toxicity and will produce an effluent of sufficient quality to meet the TRE objective.

Section 7

Source Identification Evaluation

The results of the toxicity identification evaluation (TIE) should provide the clearest picture possible of what is causing final effluent toxicity. Based on this information, a discharger must decide how to proceed in the TRE process. One option at this point is to evaluate various treatment methods for the removal of the identified toxicants from the final effluent. The other option is to search for the source(s) of the identified toxicants or toxicity. Source controls, such as chemical substitution, spill control or treatment of the source stream, may be technically and economically more attractive than treating the final effluent. For the purpose of this discussion, influent streams are defined as all streams that are tributaries to the wastewater treatment system (e.g., process streams, surface runoff, non-process wastewaters). Source streams are those influent streams which are found to be contributing to effluent toxicity.

There are advantages and disadvantages associated with both the treatability and source investigation options. Proceeding to treatability studies on the final effluent is perhaps the more direct approach and can normally result in successful resolution of the toxicity problem. However, the cost of this success may be high; requiring the construction or modification of a treatment unit with additional operating expenses. On the other hand, identification of the source of toxicity could result in a much more cost-effective solution and minimize the potential for cross-media transfer of toxic pollutants to the air or sludge during wastewater treatment. The search for source streams may be a difficult task in complex facilities with highly variable production schedules and processes. However, if the upstream search is successful and the toxicity of the identified source streams can be easily treated or reduced by other source control methods, a major savings in construction, operation, and maintenance might be realized. It is often the case, that treatment of smaller, more concentrated streams can be performed more efficiently and economically than treatment of large, relatively dilute streams (e.g., the final effluent).

Selection between the treatability studies and source identification options must be made on a site specific basis. Subjects for consideration in this selection include: the results of the TIE and facility operation tiers of the TRE, the ease of treating the final effluent, the number of possible source streams, the ability to modify the associated processes ***or*** substitute process chemicals, and the variability in the causes of toxicity. The purpose of this section is to present some generalized methods to conduct a source identification evaluation. Guidance on treatability studies is discussed in Section 8 - Toxicity Reduction Methods.

For this section, it is assumed that if the decision is made to search for the sources of final effluent toxicity, the following five step approach may prove appropriate:

1. Set a search image for upstream evaluations based on the results of the TIE.

2. Select sampling locations on selected suspect source streams based on the TIE results and facility information from Tiers I and II. If obvious suspect source streams are not evident, use the process of elimination to systematically work upstream and narrow down the number of possible source streams.

3a. If the causative agents of effluent toxicity have been identified in the TIE, use chemical specific analyses for these compounds for tracking to sources.

3b. Where necessary, evaluate the degradation effects of the facility treatment plant on altering the toxicants identified in the effluent. Modify the search image according to the results of this evaluation.

4a. If the TIE did not result in the identification of the specific chemicals causing effluent toxicity use bench scale model to simulate treatment plant degradation and track toxicity.

4b. Where necessary characterize (Phase I of TIE) the bench scale treated samples from suspect source streams to provide a more detailed comparison with the search image.

5. If specific process streams have been clearly identified as the sources of final effluent toxicity, move up through the process stream to identify toxic side- streams.

At the completion of this procedure, upstream sources of final effluent toxicity may be identified. Source streams will only be identified if they are sufficiently toxic and are not detoxified by the treatment system, or if they contain the specific toxicants found in the final effluent or their precursors. Figure 7.1 presents a flowchart illustrating the strategy to conduct a source identification evaluation. This process will be greatly simplified if a specific chemical has been identified as a causative agent of final effluent toxicity. If this chemical is known to be chemically refractory to treatment, it would be possible to simply look for this chemical in the influent streams. However, if there is the likelihood that the causative agent is altered in the treatment process (e.g., rearrangement or reaction/decomposition products), it may be necessary to follow the scheme for evaluating treatment degradation presented in this section. Examples of source investigations are presented in Appendices Al, A2, A3, A6 and A7. These examples vary in complexity from simply identifying the toxic source streams to the final wastestream, to large and complex facilities where the biodegradability of toxicity of numerous process streams was evaluated before and after treatment (A2 and A7).

Setting the Initial Search Image

In most cases, the results of the TIE will identify either the specific chemicals or classes of compounds which are causing final effluent toxicity. In addition, the manner in which these toxicants or the characteristics of the toxicity vary over time will also be assessed. A review of this information should produce an initial search image for the source identification effort. As one moves further upstream, it may be necessary to alter this initial search image based on how the wastewater treatment system or any other process may degrade or alter toxic constituents.

Sample Collection from the Influent Streams or Selected Process Streams

Design of a sample collection scheme for source investigation tracking must be based on site specific circumstances and on the information gathered in the previously conducted Tiers of the TRE. For chemical specific tracking it may be possible to use collected information to determine one or more "suspected" source streams. The sampling scheme would then be designed to confirm which of these suspected source streams is in fact, the source of the identified toxicants. Where there are a large number of influent streams, and/or it is not evident from the available facility information which are the likely source streams, then the sampling design should utilize the process of elimination to work up through the influent streams to the source of the identified toxicants. Procedures for sample collection and handling are described in several EPA documents (USEPA 1982, 1979, 1988a and 1988b).

If the TIE has not resulted in the identification of the specific toxicants, but has successfully characterized the physical/chemical nature of the toxicity, it will usually be difficult to select "suspect" source streams to streamline the source investigation. In this case it would be most effective to design a more systematic sampling scheme which utilizes the process of elimination to track the toxicity up the wastewater stream to the source(s).

The information on the variability of the toxicity gained from the TIE and also from the facility information Tiers of the TRE should be utilized to assist in determining the number and timing of samples. This information should also be useful for deciding whether grab or composite samples should be used. Initially, flow proportional composite samples should be used and scheduled to coincide with facility production schedules. Influent stream flow data must be collected as part of the sample collection in order to determine the relative contributions of each influent stream sampled to the combined wastestream and final effluent.

Chemical Specific Analyses for Tracking to Toxicant Sources

If the TIE has successfully identified and confirmed the causative agents of effluent toxicity, chemical specific analyses for these compounds can be used for the source investigation. This approach involves utilizing the chemical analysis techniques used in Phase II of the TIE to test for these compounds in the samples from the influent streams, In some cases the facility information from Tier II of the TRE may indicate which influent streams are the likely sources of the identified toxicants. However, it will usually be necessary to conduct sampling and analysis to ascertain which influent stream(s) is in fact the source of the toxicants. Methods for chemical analysis can be found in the Standard Methods for the Examination of Water and Wastewater (APHA, 1985) and in American Society for Testing and Materials (ASTM) manuals.

Prior to chemical analysis of influent stream samples, a literature search may be conducted to determine if the toxicant identified could be a degradation product of the wastewater treatment plant. Where there is clear evidence that the toxicant is a treatment by-product, the influent samples should be analyzed for the precursor compounds as well as the identified toxicants. In cases where

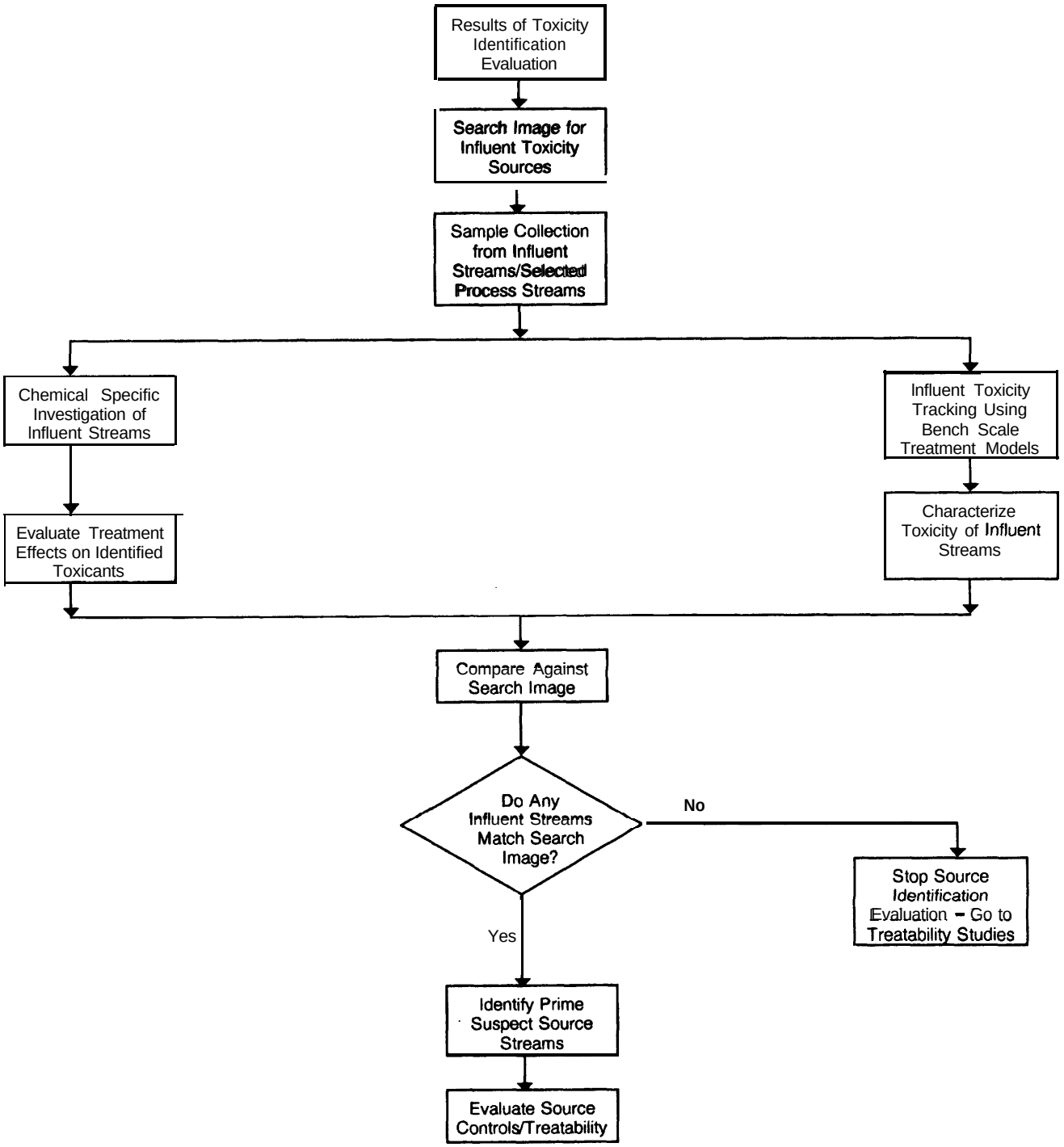

Figure 7.1. Source identification evaluation flow chart.

chemical specific analysis is successful in locating the source of effluent toxicity the TRE can proceed to Tier V Toxicity Control Method Evaluation. If the source stream cannot be located following this approach, the results of the chemical analyses of the influents and of the TIE should be carefully reviewed to determine if errors or unsupported conclusions have been made. Attention should be paid to whether the samples collected were representative of the influent streams and that variability in the production schedules and effluent toxicity have been considered in the sampling design.

If this review determines that the wastewater treatment plant may have an effect on the toxicants that was not apparent from the literature search it may be necessary to evaluate the degradation effects of the treatment plant. This evaluation would determine how the treatment system alters the chemicals of concern. These results would be used to

modify the search image to be used for the source investigation.

Evaluate Treatment Effects on Identified Toxicants

Wastewater treatment systems can affect the magnitude and composition of toxicity in the wastewater stream in a variety of ways. Some influent toxicants may be degraded into non-toxic moieties, others may simply pass unaffected through the system, and still others may be altered or degraded into even more toxic products. In most industrial situations, it is not possible to predict the likely outcome, This lack of predictability is not surprising since wastewater treatment systems are not generally designed to treat toxicity. Most systems are designed to treat conventional pollutants and the fate of toxicity is incidental. Therefore, since the fate of toxicants cannot always be predicted, in some cases it may be necessary to empirically determine how the treatment system at a specific facility affects toxicity. The objective of such an evaluation is to modify the search image formed from the TIE results to include any alterations imposed by the treatment system. This revised search image will then allow for a more comprehensive analysis for the chemicals in the various process streams that are potential sources of final effluent toxicity. Again, in cases in which the specific causative agents of toxicity in the final effluent are refractory to treatment, detailed evaluation of the role played by the treatment plant will not be necessary.

The evaluation of how the wastewater treatment system impacts toxicity can be addressed by performing specific chemical analyses on both its influent and effluent streams (e.g., Appendix Section A2 and A7). If the toxicity in the effluent is variable, samples should be collected in a manner which ensures that the same slug of wastewater is being analyzed in the influent sample and the effluent sample. This will require consideration of transit time through the system and collection of the effluent sample the proper amount of time after the influent sample was collected. Using this approach, comparison of the influent and effluent results should identify how the treatment system affects the magnitude and composition of wastewater toxicity at any particular time.

The number and timing of samples required to adequately evaluate treatment system impacts on toxicity will depend on the type and frequency of variability exhibited by the effluent. If the toxicity in the final effluent has been shown to exhibit little or no qualitative variability over time, it might be sufficient to perform this comparison of treatment plant influent only twice. However, if qualitative variability has been shown to be significant, then samples should be analyzed a sufficient number of times so that the fate of each of the identified toxicants is evaluated. For example, if the toxicity in the effluent is sometimes caused by a cations and at other times by a neutral organic, the treatment plant analyses should be performed at least twice when each situation occurs. Double checking in this analysis is recommended in order to ensure a successful source investigation.

If the concentration of the toxicant in the influent to the treatment plant can be shown to be greater than or equal to the concentration observed in the final effluent, the plant probably does not have an effect and the SIE can proceed to chemical analysis of the process streams. On the other hand, if the specific compound is absent in the influent or markedly increased in the effluent relative to the influent, more specific analysis will be necessary to determine the precursor or parent compounds of the effluent toxicants. Understanding the reactions would help form the proper search image when proceeding into the influent streams. Where this determination proves to be a prodigious task, the investigator may choose to use the alternative approach described in step 4 to track toxicity.

Use Bench Scale Model to Simulate Treatment Plant Degradation and Track Toxicity to Source Streams

If process streams are shown to contain the specific toxicants found in the final effluent or contain precursors to those toxicants, there is little question as to their designation as sources of final effluent toxicity. However, if process streams are only suspected as possible sources of final effluent toxicity because they are known to contain the appropriate physical/chemical classes of toxicants, there still exists some uncertainty. A major reason for this uncertainty is the possibility that even though the process stream contains the proper class of toxicants, the specific chemicals in the stream may degrade or be chemically or physically transformed as they pass through the wastewater treatment system. Just because a class of toxicants has the potential to either pass through the treatment process unaltered or be degraded into another toxic class does not mean that the specific chemicals in any particular process stream will follow this general scenario. Therefore, if generic toxicity is to be used to investigate which influent streams are the sources of final effluent toxicity, it will usually be necessary to evaluate the degradability of each influent stream sample prior to testing for toxicity.

The degradability of the toxicity in a specific influent stream can best be estimated by individually passing that stream through the actual wastewater treatment system and observing the outcome (e.g., Appendix A7). Unfortunately, this type of experiment is not usually possible in an industrial

facility because of the difficulty in segregating streams and the lack of storage for the other sources of wastewater. Therefore, degradability must be estimated using physical models of the treatment system (e.g., Appendix A2).

The first step in the use of physical models is to determine the appropriate bench scale model of the wastewater treatment system. If the system just contains one unit (e.g., an activated sludge unit with no equalization or aerated ponds) then this step is trivial. However, if the system consists of several units (e.g., aerated ponds, followed by activated sludge, followed by carbon adsorption). then it is necessary to either model all of these units or identify which unit is the most important in toxicity control. Such an identification effort may require sampling along the treatment process and determining the effect of each unit on toxicity.

The second step is to design the physical model to mimic the unit under consideration. Possible design criteria would include hydraulic residence time, physical and chemical conditions (e.g., pH, DO, and temperature), and biological composition (e.g., proper bacterial composition and biomass).

The third step would be to validate the accuracy and precision of the physical models predictions. Model accuracy could be evaluated by collecting a sample of the influent to the treatment plant and passing it through the model. If the output of the model is the same as the real unit, accuracy is validated. Model precision could be evaluated by setting up several replicates of the model and passing the same waste stream through each or by splitting a sample and testing each aliquot. If the outputs of all replicates are the same, precision is validated. Since the purpose of this approach is to assess the relative toxicity of the influent streams to determine the source of effluent toxicity, it is not always necessary that the bench scale physical model exactly mimic the quantitative effect of the treatment plant. This concession to the accuracy and precision of the bench scale model should not compromise the models utility to assess the toxicity which is refractory to treatment nor should it prevent the tracking of this refractory toxicity to its source.

The fourth and final step would be to pass each process stream under consideration through the model treatment system and evaluate the degradation in toxicity. When individual process streams are passed through the model system, it is important that consideration be given to whether some predilution may be necessary. One reason for predilution is to prevent killing the bacterial community in the unit by exposure to a very toxic process stream. The resident bacterial flora may not be accustomed to such high levels of toxicity, since it is normally exposed to this process stream only after it has been diluted by other influent streams, A second reason for predilution is to provide an adequate range of nutrients to the bacterial community. The resident bacterial flora may require a variety of nutrients which it would normally receive from a mixture of all influent streams. However, if only one process stream is passed through the model, the bacterial flora may not receive its nutritional requirements and, consequently, not function normally. This potential problem can be overcome by prediluting the suspect process stream with a small amount of the mixed influent which normally enters the treatment unit. This small amount of predilution will not alter the outcome of the experiment as long as a suitable control is used. The EPA protocol for conducting municipal TREs (1988) provides additional discussion on designing these tests.

At the conclusion of the degradability test each sample would be tested for toxicity. The toxicity test used should be the same as was utilized in the TIE. However, it is important to emphasize that either acute or chronic toxicity tests can be used for this evaluation. By following the sampling scheme described above it should be possible to identify those influent streams which are the prime suspect sources of final effluent toxicity. These source streams will have been identified because they are sufficiently toxic and their toxicity is not diluted out by other influent streams nor degraded in the treatment system. At this point the investigator could proceed to Tier V of this methodology, the toxicity reduction method evaluation. If additional information on the toxicity of the source stream(s) is desired prior to Tier V evaluation, additional characterization of the toxicity of the identified source stream can be conducted.

Characterize the Toxicity of Suspect Source Streams

The techniques used to characterize the toxicity in the bench scale treated influent streams should be the same as those used to characterize the final effluent. The characterization would begin by determining the amount of toxicity in the bench scale treated source stream. This must be accomplished by using the same toxicity test organism and endpoint selected in the effluent TIE. These evaluations should be performed often enough to detect any variability in the toxicity of the bench scale treated source stream. The toxic classes of compounds that are characterized in the samples would then be compared against the search image to provide additional certainty that the source streams contain the proper classes of toxic constituents. It may be useful to perform these characterizations often enough to assess any source stream variability that could correlate to variability in effluent toxicity.

Further Upstream Investigations

Once a process stream has been positively identified as a source of final effluent toxicity, it may be desirable to move upstream through the process and identify the specific "side streams" which are the major contributors of toxicity (i.e., Appendix A2). Usually this, more detailed, evaluation would only be necessary at very large, complex facilities. The decision to proceed in this direction should consider the cost effectiveness and technical feasibility of segregating and treating toxic side-streams if they are identified. If the decision is made to proceed, a similar strategy as was pursued to evaluate process streams should be followed.

The first step is to identify the various side-streams which feed into the process stream. This can usually be accomplished by review of plant blueprints and interviews with operations personnel. The second step is to either analyze for specific toxicants (if they have been identified) or determine the magnitude of toxicity in each bench scale treated side-stream. A toxicity evaluation should use the same monitoring tool as used in any previous characterization efforts and would be performed often enough to adequately consider side-stream variability. If the side-stream receives pretreatment before discharge into the process stream, it is essential that pretreatment be completed before bench scale treatment and toxicity measurements are made. If it is not possible to obtain a side-stream sample after pretreatment, it will be necessary to use the bench scale model to simulate the pretreatment units. The guidance provided in the previous section could be followed to design, validate, and use such a model system.

At the conclusion of this evaluation, it may be possible to identify a very concentrated process side-stream which is the ultimate source of final effluent toxicity. If so, source control options might be directed towards modification of the process, substitution of toxic compounds, installation of additional pretreatment methods, modifications to existing pretreatment systems, or segregating the side-stream from the treatment system for recycling.

Section 8
Toxicity Reduction Methodologies

The ultimate goal of the TRE is to reduce toxicity in the final effluent to levels which are not harmful to the aquatic life of the receiving water. In some cases, additional reduction in the effluent toxicity may be necessary for the protection of wildlife and human health, Initially, one looks at direct solutions to accomplish this; housekeeping, chemicals substitution, and treatment plant optimization as described in Sections 3 through 5. Once these steps are completed, if the effluent still exhibits toxicity, then other approaches are indicated. These include:

- Source reduction technologies; and
- Improvement of waste treatment operations.

Methods by which these may be applied to a specific industrial facility are discussed below. In all cases, the evaluation of methods to remove toxicity from wastestreams must consider the ramification of transferring toxicants to other media. Possible problems include the need for disposal and/or treatment of newly contaminated material. Each of the case studies included in Appendix A include some discussion of identified toxicity reduction methodologies which are specific to the identified toxicant(

Source Reduction

Source reduction involves practices and procedures aimed at reducing or eliminating toxic loads in the most practical, cost-effective, and permanent manner available. Source reduction may be accomplished from the most upstream end of the process to the point of influent to the treatment plant. It assumes that a specific source can be identified, and may involve material substitution, process modifications, waste stream commingling, pretreatment, materials recovery or waste recycling.

Before source reduction can be effective, those sources contributing to effluent toxicity must be identified. This will normally take place during the Toxicity Identification Evaluation or Source Identification phase of this study. Once identified, appropriate remedial technologies for these waste streams can then be examined.

Source reduction is not a clear-cut, step-by-step process. The steps taken, criteria examined, procedures followed, and technologies addressed will be highly case specific, and dependent upon such factors as wastestream composition, physical constraints, and flow variability. Therefore, when examining source reduction technologies, the analyst must first start out by identifying those areas most likely to be positively effected, and then identifying the technologies and approaches which are most likely to succeed.

Toxic components are sometimes found to be raw material contaminants, reaction catalysts, or additives. Sometimes even slight changes in the materials used or specification of an alternate, higher purity material can result in a measurable reduction in toxicity of the effluent. Further purification of contaminated raw materials at the plant site would be an alternate means of accomplishing this end.

Modification of the process which generates a particular toxic waste component has been found to be a very practical means of toxicity reduction. These modifications may be primarily aimed at waste reduction, or may be aimed at process efficiency; the end result is the same. Process modification could also consist of materials substitutions. All of these options will involve an intensive evaluation by process engineering with the goal of eliminating certain specific compounds without sacrificing product quality or process efficiency.

Commingling of waste streams prior to treatment may also provide for toxicity reduction in the effluent, The effect of dilution, neutralization, reaction, precipitation or other factors may enable treatment or degradation of toxic components which was not otherwise possible. Care should be taken in combining waste streams, however, so as not to prompt unwanted reactions.

Materials recovery operations and waste recycling are other source reduction options. For example, a small amount of contaminated solvent may be

routinely discharged to the treatment system works, adding to the final toxicity. If this contribution can be diverted, and the material recovered, two benefits are possible; toxicity in the final effluent may be reduced and solvent may be recovered. Metals recovery from metal plating operations is another area where waste recovery may be feasible.

Pretreatment should also be examined as a means of reducing toxicity in the source waste streams. Both physical and chemical methods may be feasible, depending upon the stream. Each identified source stream should be examined to determine the characteristics of the toxic component(s). Knowledge of these characteristics will allow evaluation of alternate means to reduce the source toxicity, thereby reducing final effluent toxicity.

Technologies which may be applicable for source treatment include chemical oxidation; wet air oxidation; resin adsorption; air, steam, or gas stripping; and membrane processes including reverse osmosis and filtration technologies. These processes would be applied to the source stream prior to conventional treatment. The aim is to reduce the levels of toxic contaminants in the source streams which are causing the observed toxicity in the final effluent. The actual technology employed in a particular situation would be dependent upon factors encountered at the site. Selection of an appropriate technology will probably require lab, bench and pilot scale demonstrations of the effectiveness of the technology prior to actual start up on a production scale.

If toxicity in the effluent can be shown to result from a particular source contribution, and this source can be economically reduced, then these techniques should be examined. If, however, toxicity still appears in the effluent which cannot be attributed to a particular source or production process, or if source reduction is not feasible because the source cannot be identified, then end-of-pipe treatment alternatives must be examined.

Waste Treatment Operations Improvements

Plant optimization is the most direct means to improve waste treatment operations. Plant optimization as described in Section 4 would take place before any plant alterations occur. If plant operations are already at an optimal level, and effluent quality still does not meet the desired goal, then further treatment modifications may be required based on the results of the TIE. Areas to be examined include hydraulic and mass loading of the facility, chemical feed rates, biological enhancement, source batching or segregation, effluent polishing, and additional treatment processes.

Hydraulic loading should be examined. It is possible that changes in existing processes or additions of new process lines may be causing serious disruptions in plant operations. If hydraulic loading is considered a problem, alterations such as source sequencing, addition of equalization or buffer tanks, and expansion of the treatment facility, should all be considered.

If contaminant levels in the waste streams are high enough, a plant can be hydraulically underloaded and still be receiving mass loadings in excess of design capacity. High mass loading could result in pass-through of certain toxic contaminants, or reduction of treatment efficiency through shock loading and upsets of plant operations. All of these possibilities could lead to effluent toxicity and can be prevented through appropriate system modifications.

Adjustments and substitutions in the chemical usage in the various treatment processes can also result in a desirable improvement in the effluent water quality. Again, there may be sufficient difference between design and operating conditions that adjustments are needed to optimize plant performance. It may also be possible, through substitution, to remove certain chemical species which are not removed by existing operations, and which may be adding to the toxicity of the final effluent. Chemicals which should be considered include: cooling tower slimicides, ammonia nutrients, lime, some polymers, and oxidizing agents.

Bio-enhancement is another means to improve toxicity reduction through a facility. Not all organisms are equally effective at degrading particular pollutants. If a stable community can be established which is capable of reducing certain toxic contaminants, additional toxicity reduction may result. This may require seeding the system, possibly with genetically engineered organisms, with an attendant period of growth and acclimation prior to operation. The effectiveness and cost of establishing a new biological population should be carefully investigate-d in bench or pilot-scale prior to implementation.

Batching and sequencing of flows may be desirable in order to even out peaks and valleys in the plant loading profiles. This can result in a more consistent level of treatment through the plant, and hence a better quality effluent. This may require the construction of additional influent holding capacity (ponds or tanks).

Influent pretreatment may be required to remove unwanted toxic constituents. This will involve the constructing of additional facilities upstream of the conventional treatment process. An example of where this may be necessary is at a facility subject to high metals in the effluent. It may be necessary to remove these metals prior to conventional treatment.

Effluent polishing may be an appropriate alternative. It is often times possible to reduce toxicants in the effluent by removing them at the end of the pipe. Such may be the case with non-polar organics which may be effectively removed through activated carbon or resin adsorption.

Changing treatment processes, or adding additional steps in the treatment process, may also be a viable reduction technology. Addition of powdered activated carbon to the biological treatment process can reduce organic toxins to acceptable levels. If toxicity is shown to be a function of suspended solids in the effluent, then the addition of a final clarifier or filter may be required.

Because the need for additional treatment is a function of the wastestream involved, the technologies discussed above must be screened for applicability to the situation at hand. Tables 8.1 through 8.4 summarize treatment technologies for various wastestreams. These are not meant as comprehensive summaries for the various technologies listed. Rather, they serve to illustrate the variety of technologies which are available for consideration. Further information may be obtained by consulting the selected references contained in the Bibliography Section of this methodology (Campanella, et al. 1986, Carpenter, et al. 1984, Grosse 1986, Hsu 1986, Kiestra 1986, Noyes 1981, Petrasek 1981, Pitter 1976, Rawlings 1982, Roberts 1984, Siber 1979, Tabak 1978, Weber 1983). In addition, two good sources of information published yearly are the literature review issue of the Journal of Water Pollution Control Federation, and Proceedings of the Industrial Waste Conference sponsored by Purdue University.

Evaluation of Alternative Reduction Methodologies

Changes in treatment methodologies must be carefully evaluated prior to implementation. Factors to consider include:

- cost;
- performance;
- complexity of solution;

Table 8.1. Effluent Levels Achievable in Heavy Metal Removals*

Metal	Achievable Effluent Concentration (mg/L)	Technology
Arsenic	0.06	Sulfide precipitation with filtration
	0.06	Carbon absorption
	0.006	Ferric hydroxide coprecipitation
Barium	0.5	Sulfate precipitation
Cadmium	0.06	Hydroxide precipitation at pH 10 to 11
	0.05	Coprecipitation with ferric hydroxide
	0.008	Sulfide precipitation
Copper	0.02-0.07	Hydroxide precipitation
	0.01-0.02	Sulfide precipitation
Mercury	0.01-0.02	Sulfide precipitation
	0.001-0.01	Alum coprecipitation
	0.0005-0.005	Ferric hydroxide coprecipitation
	0.001-0.005	Ion exchange
Nickel	0.12	Hydroxide precipitation at pH 10
Selenium	0.06	Sulfide precipitation
Zinc	0.1	Hydroxide precipitation at pH 11

*Adapted from: Lankford, et al. 1987. Iriginal reference Patterson 1986.

- ease of implementation;
- expected life of modification;
- flexibility of the modification; and
- application to various wastestreams.

In evaluating the various alternatives available, the relative importance that each of these considerations carries on the final selection must be established. This will be a site specific determination and must be made by the plant.

Costs play an important part in the selection of an appropriate alternative. High cost solutions will generally be regarded less favorably than lower cost, unless other factors outweigh them. When costs are evaluated, care must be taken to include all real costs associated with the alternative. These may include design and construction, maintenance and operation, and additional disposal costs associated with the

Table 8.2. Relative Biodegradability of Certain Organic Compounds*

Biodegradable Organic Compoundsa	Compounds Generally Resistant to Biological Degradation
Acrylic acid	Ethers
Aliphatic acids	Ethylene chlorohydrin
Aliphatic alcohols (normal, iso, secondary)	Isoprene
Aliphatic aldehydes	Methyl vinyl ketone
Aliphatic esters	Morpholine
Alkyl benzene sulfonates with exception of propylene-based benzaldehyde	Oil
Aromatic amines	Polymeric compounds
Dichlorophenols	Polypropylene benzene sulfonates
Ethanolamines	Selected hydrocarbons
Glycols	Aliphatics
Ketones	Aromatics
Methacrylic acid	Alkyl-aryl groups
Methyl methacrylate	Tertiary aliphatic alcohols
Monochlorophenols	Tertiary aliphatic sulfonates
Nitriles	Trichlorophenols
Phenols	
Primary aliphatic amines	
Styrene	
Vinyl acetate	

a Some compounds can be degraded biologically only after extended periods of acclimation.
* Adapted from: Lankford, et al. 1987.

Table 8.3. Activated Carbon Treatment of Selected Compounds*

Compound	Influent (µg/l)	Effluent (µg/l)	% Removal
Carbon tetrachloride	20,450	560	97.3
Hexachloroethane	104	0.2	99.8
2-Chloronaphthalene	18	<3	>83
Chloroform	1,430	27	98.1
Hexachlorobutadiene	266	0.1	99.9
Hexachloro-cyclopentadiene	1,127	0.8	99.9
Naphthalene	529	<3	>99.4
Tetrachloroethylene	34	CO.1	>99.7
Toluene	2,360	<3	>99.9
Aldrin	84	0.1	99.9
Dieldrin	28	0.2	99.3
Chlorodane	217	co.1	>99.9
Endrin	123	0.9	99.3
Heptachlor	40	0.8	98
Heptachlor epoxide	11	co.1	>99.1

*Adapted from: Lankford, et al. 1987. Original reference Patterson 1985.

Table 8.4. Air Stripping of Selected Compounds*

Compound	Solubility (mg/l)	Observed % Removal
Benzene	1,780	90
Carbon tetrachloride (tetrachloromethane)	800	89
Chlorobenzene	448	97
1,1,1-Trichloroethane	4,400	99
Chloroform (trichloromethane)	7,840	99
1,2-Dichlorobenzene	100	93
1,3-Dichlorobenzene	123	95
1,4-Dichlorobenzene	79	97
1,2-Trans-dichloroethylene	6,300	84
1,2-Dichloropropane	2,700	98
Ethylbenzene	152	99+
Methylene chloride (dichloromethane)	16,700	99+
Bromoform (tribromomethane)	3,190	92
Dichlorobromomethane		98
Chlorodibromo-methane	--	97
Naphthalene	30	91
Nitrobenzene	1,900	28
Toluene	515	96
Trichloroethylene	1,000	98

*Adapted from: Lankford, et al. 1987. Original reference Patterson 1985.

generation of any solid waste materials (sludges, etc.) not presently generated.

Performance of the solution must also be examined. Performance is judged on a number of factors, including but not limited to:

- a measurable toxicity reduction;
- the effectiveness of the solution on the expected variety of flows to the plant;
- the ease with which the solution can be modified to handle future changes in the influent process wastestreams; and
- the ability of the modified process to produce an effluent of consistent quality (i.e., consistency in achieving final effluent toxicity limit).

It is probable that more than one effective solution will be identified. Ranking of effective solutions by some pre-established selection criteria will aid in the selection of a “best” solution.

The complexity of the solution and the ease with which the solution may be implemented are important factors to consider. An easily implemented solution is often desirable over one which requires significant investment in time and resources, not only because of resource savings, but also because the reception at the plant level may be better. Complex biological systems require more lengthy start-up and acclimation periods. The smoother the transition process is the more likely changes will succeed in bringing about the desired effects.

All changes will carry with them attendant useful lives dependent upon the type of change made and design criteria. The useful life is associated with cost and must also be viewed in light of possible changes in plant production processes and regulatory requirements.

The flexibility of the reduction methodology and its applicability to a variety of wastestreams also bears examination. A solution may give good results over a short time frame, but may become obsolete through the introduction of new processes and new wastestreams. Process changes, plant expansions, and the like should all be considered. Fluctuations in the present wastestream should also be examined, as these may effect the appropriateness of the evaluated technology.

Selection of Reduction Methodology

After potential reduction methodologies have been identified and evaluated, the selection process takes place. At this point, each methodology has been examined, and certain qualities defined (cost, performance, flexibility). Selection requires that these qualities be ranked according to some established criteria, such that a “best” methodology may be chosen from those identified as potential solutions.

Each alternative is assigned a weighting with regard to the criteria and ranked. Selection of the “best” alternative may then proceed based upon the ranking achieved.

Once the alternative is identified, confirmation begins at the lab, bench and/or pilot scales. This is essential, since in most instances, significant investment in time and resources is required for implementation. Solutions which look good on paper may not work in actual application due to unforeseen or unanticipated factors. It may be necessary to go through testing on several “best“ solutions before one is identified which performs up to expectations.

Implementation of the Solution

When the “best” solution has been selected and confirmed, the implementation process can begin. Implementation may consist of several phases, dependent upon the mechanism selected. If a new treatment facility is built, then this process may include design, construction, and start up. If the change is procedural, then these stages may be concept, planning, and implementation. Whatever the method selected, the final objective is the same -- reduce toxicity in the final effluent to acceptable levels.

Follow-Up and Confirmation

After implementation, follow up and confirmation are essential. A solution which does not function as planned is no solution; likewise, specific procedural changes must be carefully implemented and maintained if they are to continue providing the level of effectiveness anticipated. More is said on the follow up tier in the following chapter.

Section 9
Follow-Up and Confirmation

The final phase of the TRE process, which occurs after the control method has been selected and implemented, is to confirm that final effluent toxicity has been reduced to acceptable levels. This can be accomplished by implementing an appropriate monitoring program to measure final effluent toxicity. The follow-up biomonitoring would also most likely be part of a required permit monitoring program, specified in an NPDES permit and associated with a specific limit. In general, the acceptable endpoint of the evaluation would be the target that the TRE was designed to meet which also would be the permit compliance limits for toxicity. These limits and endpoints could be for either acute or chronic toxicity.

Usually, the applicable conditions for follow-up monitoring will be spelled out by the NPDES permit, administrative order, etc. Chemical analyses for the causative agents of effluent toxicity might also be required in the follow-up monitoring program.

Several of the case studies found in Appendix A have progressed to the point of implementing follow-up and confirmation activities. In Appendix A-l, follow-up testing indicated that acute toxicity had been either eliminated or greatly reduced. Follow-up monitoring in Appendix A-7 was used to confirm that non-biodegradable organic matter was still the source of final effluent toxicity.

Normally, the same biomonitoring test and toxicity endpoint (LC_{50} or NOEL) which initially indicated the effluent toxicity and triggered the TRE will be used to confirm the successful reduction of effluent toxicity. The test conditions and procedures, as well as the number and timing of samples, will be specified by the regulatory authority. Typically, a period of accelerated monitoring to confirm the toxicity reduction will be required prior to resuming regular permit biomonitoring.

Section 10
References

Berg, E. 1982. *Handbook for Sampling and Sample Preservation of Water and Wastewater.* U.S. Environmental Protection Agency, Cincinnati, Ohio. EPA 600/4-82-019.

Berthovek, D.M., and R. Fan. "Evaluation of Treatment Plant Performance: Causes, Frequency, and Duration of Upsets." *J. Water Pollution Control Federation, 58,368* (1986).

Burks, S.L. *Toxicity of Petroleum Refinery Wastewaters Relative to Types of Treatment Systems.* U.S. Environmental Protection Agency, Cincinnati, Ohio (1984).

Campanella, L., E. et al. "Mercury Removal from Petrochemical Wastes," *Water Research, 20,* 1, *63* (1986).

Carpenter, B.H., et al. *Toxicity Treatability of Iron and Steel Plant Wastewaters: A Resource Document.* U.S. Environmental Protection Agency Office of Research and Development, Washington, D.C., June 1984.

Draper N. R., and H. Smith. *Applied Regression Analysis.* John Wiley and Sons, New York, New York (1966) pg. 178.

Eckenfelder, W.W., J. Patoczka, and A. Watkin, *Wastewater Treatment, Chemical Engineering,* September 2, 1985.

Grosse, D.W. "A Review of Alternative Treatment Processes for Metal Bearing Hazardous Waste Streams." *J. Air Pollution Control Federation, 36, 603* (1986).

Hsu, E.H. "Treatment of Petrochemical Wastewaters in Sequencing Batch Reactors." *Environmental Progress,* 5, 2, 71 (1986).

Infometrex, Inc., Arthur, Pattern Recognition Software, Seattle, Washington (1986).

Kiestra, H., and I. Eggers. "Treatment of Industrial Wastewater." *Water Science Technology,* 18, 3 (1986).

Kincannon, D.F., and E.L. Stover. "Determination of Activated Sludge Biokinetic Constants for Chemical and Plastic Industrial Wastewaters." Environmental Protection Agency Draft Report, CR-806843-01-02 (1982).

Lankford, P.W., Y. Argaman, and K.D. Torrens. *Methodology for Toxicity Limitation Compliance Through Source Analysis.* 59th Annual Water Pollution Control Federation Conference, October 1986.

Lankford, P.W., W. W. Edrenfelder, and K. D. Torrens. *Technological Approaches to Toxicity Reduction in Municipal and Industrial Wastewater.* Annual Meeting Virginia Water Pollution Control Association, April 1987.

Mount, D. I., and L. Anderson-Carnahan. "Methods for Toxicity Reduction Evaluations: Phase I - Toxicity Characterization Procedures." Draft dated January 1987.

Noergaard, G., D. Duffy, and S. Vanderboom. "Troubleshooting Conventional Wastewater Pretreatment Systems." *Plating Surface Finishing,* 73, 2, 26 (1986).

De Renzo, D.J. *Pollution Control Technology for Industrial Wastewater.* Noyes Data Corporation, Parkeridge, New Jersey (1981).

Patterson, J.W. *Industrial Wastewater Treatment Technology.* 2nd Edition, Butterworth Publisher, Boston, Mass. **(1985).**

Petrasek, A.C. *Removal and Partitioning of the Volatile Priority Pollutants in Conventional Wastewater Treatment Plants - A Capsule Report.* U.S. Environmental Protection Agency Report, MERL, Cincinnati, OH, October 1981.

Petrasek, A.C., et al. Fate of Toxic Organic Compounds in Wastewater Treatment Plants. *J. Nat. Poll. Cont. Fed.,* V. 55, p. 1286 (1983).

Pielou, E.C. *Cluster Analyses Techniques: The Interpretation of Ecological Data.* Wiley Interscience, New York, New York (1987).

Pitter, P. "Determination of Biological Degradability of Organic Substances," *Water Research*, 10, *231* (1976).

Rawlings, G.D. *Toxicity Reduction Manual for the Textile Manufacturing Industry*. U.S. Environmental Protection Agency, Research Triangle Park, N.C., June 1982.

Roberts, P.V., et al. *Volatization of Organic Pollutants in Wastewater Treatment - Model Studies*. U.S. Environmental Protection Agency NTIS No. PB84-158856 (1984).

SCS Engineers, A *Curex Corporation. Toxicity Reduction Manual for the Organic Chemical Industry*. U.S. Environmental Protection Agency, Cincinnati, Ohio, February 1984.

Siber, S., and W.W. Eckenfelder. "Effluent Quality Variation from Multicomponent Substrates in the Activated Sludge Process." *Water Research*, 13, 8, August 1979.

Tabak, H.H., and E.F.Barth. "Biodegradability of Benzidine in Aerobic Suspended Growth Reactors." *Journal Water Pollution Control Federation, 50,552* (1978).

U.S. Environmental Protection Agency. *Technical Guidance Manual for Performing Wasteload Allocations, Book II. Streams and Rivers*. Office of Waste Regulations and Standards, Washington, D.C. (1983).

U.S. Environmental Protection Agency. *Technical Guidance Manual for Performing Wasteload Allocations, Book III. Estuaries*. Office of Waste Regulations and Standards. Washington, D.C. (1984a).

U.S. Environmental Protection Agency. *Technical Guidance Manual for Performing Wasteload Allocations, Book IV. Lakes, Reservoirs, and Impoundments*. Office of Waste Regulations and Standards, Washington, D.C. (1984b).

U.S. Environmental Protection Agency. "National Policy Statement for the Development of Water Quality-Based Permit Limitations for Toxic Pollutants." *Federal Register* 49:9016-9019 (1984c).

U.S. Environmental Protection Agency. *Technical Support Document for Water Quality - Based Toxics Control*. Office of Water, Washington, D.C. (1985a).

U. S. Environmental Protection Agency. *Ambient Water Quality Criteria for Cadmium - 1984*. Office of Water, Washington, D. C. EPA440/5-84-032, January 1985b.

U. S. Environmental Protection Agency. *Ambient Water Quality Criteria for Copper - 1984*. Office of Water, Washington, D. C. EPA440/5-84-031, January 1985c.

U.S. Environmental Protection Agency. *The National Pretreatment Program*. Environmental Regulations and Technology, EPA/625/10-86/005 (1986a).

U.S. Environmental Protection Agency. Project Summary: *Evaluation of Emerging Technologies for the Destruction of Hazardous Wastes*. EPA/600/52-85/069, January 1986b.

U.S. Environmental Protection Agency. *Report to Congress on the discharge of Hazardous Wastes to Publicly Owned Treatment Works (The Domestic Sewage Study)*. Office of Water Regulations and Standards. February 1986.

U S. Environmental Protection Agency. *Permit Writer's Guide to Water Quality-Based Permitting for Toxic Pollutants*. Office of Water, Washington, D.C. (1987a).

U.S. Environmental Protection Agency. "Toxicity Reduction Evaluation Protocol for Municipal Waste Treatment Plants." Draft dated September 1987b.

U.S. Environmental Protection Agency. 1979. *Methods for Chemical Analysis of Water and Waste*. Cincinnati, Ohio. EPA 600/4-79-020

U.S. Environmental Protection Agency. *Methods for Aquatic Toxicity Identification Evaluations: Phase I - Toxicity Characterization Procedures*. September 1988.

U.S. Environmental Protection Agency. "Methods for Aquatic Toxicity Identification Evaluations: Phase II - Toxicity Identification Procedures." In press.

US. Environmental Protection Agency. "Methods for Aquatic Toxicity Identification Evaluations: Phase III - Toxicity Confirmation Procedures." In press.

Walsh, C. E., and R. L. Garnas. "Determination of Bioactivity of Chemical Fractions of Liquid Wastes Using Freshwater and Saltwater Algae and Crustaceans." *Environmental Science and Technology*, 17:180-182 (1983).

Weber, W.J., and B. Jones. "Toxic Substance Removal in Activated Sludge and PAC Treatment Systems." U.S. *Environmental Protection Agency* NTIS No. PB86-182425/AS (1983).

Appendix A
TRE Case Summaries

Introduction

Appendix A presents case studies which provide examples of TREs conducted at 10 different industrial facilities whose final effluents had been found to be toxic to aquatic organisms. The 10 examples given represent a variety of industrial processes and illustrate a variety of approaches to TREs using the guidelines described in this protocol. Each case study is organized to present information in five categories:

1. Initial Data and Information Acquisition
2. Toxicity Identification Evaluation (TIE)
3. Toxicity Reduction Approaches
4. Follow-up and Confirmation
5. Problems Encountered.

As demonstrated by these case studies, there is considerable latitude within each of the categories listed above with respect to an approach of the TRE. This illustrates that the design of any TRE is unique and should be approached with deductive reasoning aimed at the particular situation (however, some general principles will apply in every case). Case studies A-5 and A-9 are more representative of the approach to conducting a TIE that is described in this protocol than are the other less recent case studies.

Section A-1

Case History: A Multipurpose Specialty Chemical Plant (MSCP) in Virginia

Introduction

The Chemicals and Chemical Products Branch (CCPB) of the Water Engineering Research Laboratory (WERL) of the U.S. EPA, working with the Battelle Columbus Division (BCD), has been developing, testing, and refining a protocol for conducting TREs to provide guidance for permit writers and permittees. Developing the protocol involves several case studies by Battelle whereby TREs are conducted at specific industrial sites. The results of these case studies and others will be documented and will be used to develop the final protocol.

U.S. EPA-WERL selected a multipurpose specialty chemical plant in Virginia as the first site (Site No.1) for conducting a TRE base on the recommendations of the Virginia State Water Quality Control Board. Historical toxicity data collected in January 1985 by U.S. EPA indicated that the final effluent at Site No. 1 was highly toxic to ***D. magna*** (24-hr. $LC_{50} < 1$ percent effluent) and moderately toxic to fathead minnows (24-hr. $LC_{50} = 21$ percent effluent). (U.S. EPA unpublished data). The on-site activities of the TRE at Site No. 1 started in May 1985 and were completed in June 1986.

Initial Data and Information Acquisition

In May, 1985, an initial visit to Site No. 1 was conducted to interview plant personnel, tour the facility, identify and establish sampling locations, and also visually inspect the wastewater treatment system and the various waste streams and unit operations of the system and plant. Operations reports, such as NPDES monitoring reports and a list of chemicals utilized by the MSCP, were obtained.

During this initial work, a plant flow diagram was developed of the unit operations and waste treatment system at the MSCP plant (Figure Al-l). Amines from Unit No. 1 [Ala = 29,000 gallons per day (GPD)] and Unit No. 4 (Alb = 5,000 GPD) are discharged into an aerated biological treatment tank (evaporation = 4,000 GPD; 20 to 30 day retention) and then into the main treatment sump (Al = 9,000 GPD). Effluents from the cooling towers (A3 = 43,000 GPD), boiler (A4 = 173,000 GPD) and metabisulfite unit (A5 = 87,000 GPD) are also discharged into the main treatment sump (Influent A = 341,000 GPD). The main treatment sump serves mainly as a pH adjustment unit. Amine effluents are basic (pH 11 to 12) whereas the metabisulfite effluent is acidic (pH 5). Liming is done in the main treatment sump (1 hour) and the contact time extended to 8 hours in the aeration tank. The aeration tank (evaporation = 3,000 GPD) also receives effluent from the collection sump (Influent B = 180,000 GPD). The collection sump receives the effluent from the specialty chemicals (B1= 144,000 GPD), and from the aerosol pesticides (B2a), research (B2b) and laboratory (B2c) unit operations (B2 = 36,000 GPD).

Effluent from the aeration tank (518,000 GPD) discharges to the first settling pond (total volume of 800,000) where the mean residence time is approximately 40 hours. Once or twice a year bottom sediment (principally $CaSO_4$ sludge) from this pond is removed and placed in a small drying pond prior to disposal at a landfill. Effluent from the first settling pond was then discharged into the second settling pond (total volume of 1.3 million gallons) where the mean residence time is 60 hours, then finally to a polishing pond (total volume of 2.4 million gallons) where the mean residence time is approximately 110 hours before being discharged to the receiving water. North pond also discharges into the aeration tank and first settling pond. This was an older waste holding pond and has an intermittent discharge.

Because of the proprietary nature of much of the chemical production at Site No. 1, very little information on production processes was obtained.

Toxicologists also reviewed a list provided by the Bureau of Toxic Substances Information of the State of Virginia, which itemized all commercial compounds utilized at Site No. 1. Historical toxicity data collected in January 1985 by U.S. EPA indicated that the final effluent at MSCP was highly toxic to ***D. magna*** (24-hr. $LC_{50} < 1$ percent effluent) and moderately toxic to fathead minnows (24-hr. $LC_{50} = 21$ percent effluent). Because the final effluent exhibited high acute toxicity to ***Duphnia*** but only moderate acute toxicity to fathead minnows,

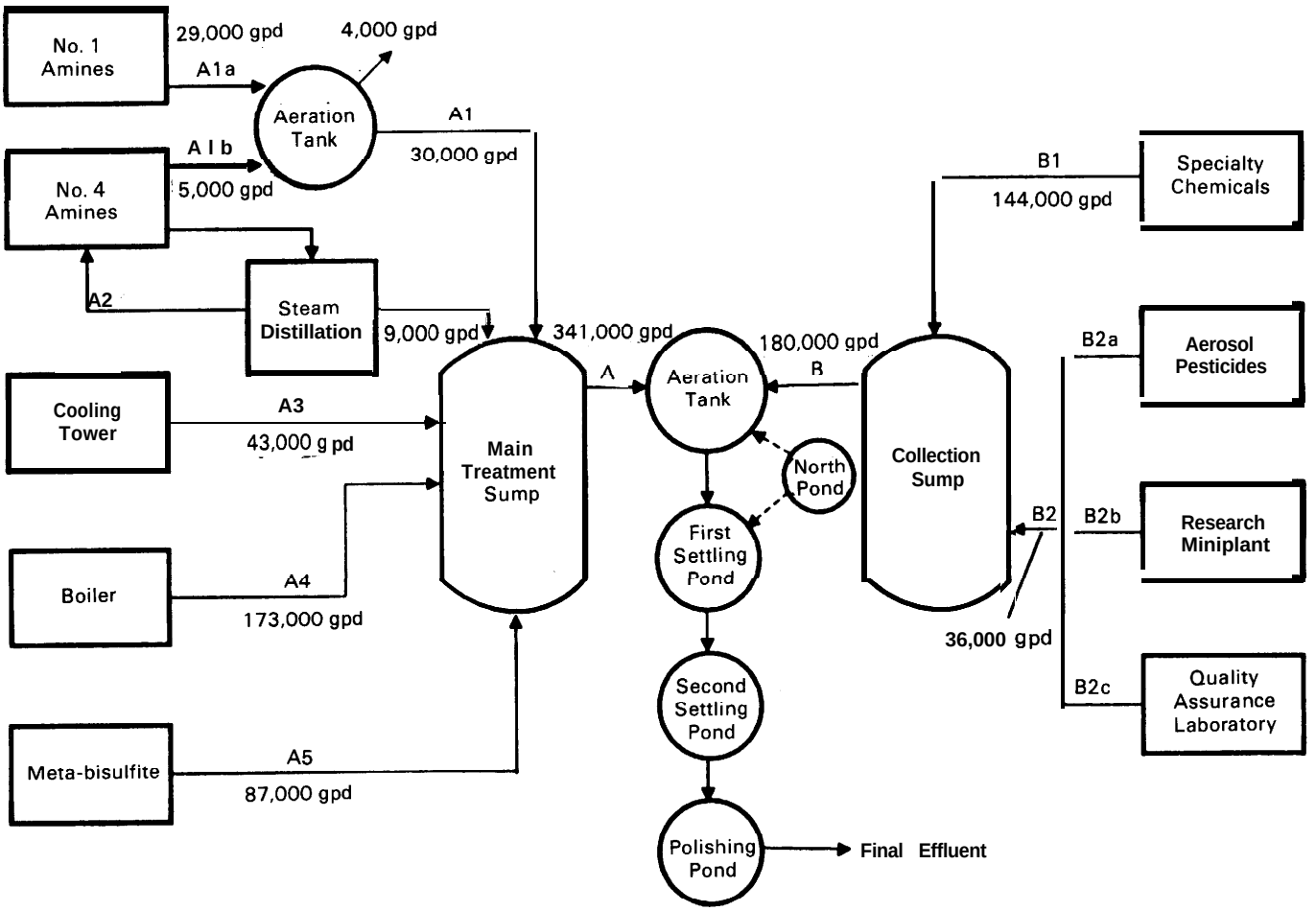

Figure AI-I. Multi-purpose specialty chemical waste flow diagram.

chemicals whose toxicity was arthropod-specific were of particular interest. The review of this list revealed several compounds and associated synergists packaged at Site No. 1, including, but certainly not limited to, the insect fumigants pyrethrin, allethrin, and dichlorvos, and the insecticide synergist, piperonyl butoxide (PBO).

Toxicity Identification Evaluation (TIE)

Eff luent Toxicity

To confirm that the final effluent at Site No. 1 consistently exhibited acute toxicity (all toxicity units, TUs, in this Case History are acute TUs which are values calculated by dividing 100 by the toxicity test LC_{50} value) and to determine which biological test species was most sensitive, a series of acute toxicity tests was conducted in May and August 1985 using *D. magna,* fathead minnows and MicrotoxR. The results of these toxicity tests indicated that the final effluent samples collected in May and August 1985 were highly toxic to *D. magna* (LC_{50} = 0.09 percent effluent) but not acutely toxic to fathead minnows (LC_{50} > 100% effluent) or Microtox (EC_{50} > 100 percent effluent). These results were similar to the January 1985 U.S. EPA data for *D. magna* (24-hr LC_{50} < 1 percent effluent).

Characterization and Fractionation - Causative Agent Identification

After identifying *D. magna* as the test organism, the next step in the TIE was to systematically isolate and identify the causative agent(s) in the final effluent. A fractionation of the August 1985 final effluent using the Walsh and Garnas (1983) method, into inorganic and organic fractions was performed and each fraction was evaluated for acute toxicity. Although the inorganic fraction exhibited some acute toxicity in the initial screening test (100 percent mortality in 25 percent effluent), two subsequent tests on the same sample with the inorganic fraction showed no acute toxicity at the concentrations tested (100 percent survival in 50 percent effluent; therefore, the LC_{50} for the inorganic fraction was > 50 percent or

< 2 TUs after storage of one day). The toxicity originally observed in the inorganic fraction was not persistent.

The organic fraction of the August 1985 final effluent sample, however, was highly toxic (LC_{50} = 0.14 percent effluent or 714 TUs). Therefore, the organic fraction was further separated into acid, base/neutral and residual subfractions and each subfraction was evaluated for acute toxicity. All three organic subfractions exhibited acute toxicity, but the acid subfraction (LC_{50} = 1.64 percent or 61 TUs) and the base/neutral subfraction (LC_{50} = 0.41 percent or 244 TUs) were significantly more toxic than levels of the solvent, methylene chloride, added during fractionation (LC_{50} > 10 percent or < 10 TUs). Thus, the acid and base/neutral subfractions were analyzed by GC/MS in an attempt to identify potentially toxic chemical constituents.

When the acute toxicity of the final effluent was evaluated in terms of Toxicity Units (TUs), the final effluent sample initially contained 1,111 TUs. The inorganic fraction contained < 2 TUs while the organic fraction contained 714 TUs. There was an apparent loss of some toxicity in the fractionation (1,111 TUs in the effluent versus 716 TUs in the combined fractions), but it appeared that the principal source of toxicity in this sample was organic in nature and may have resided in the base/neutral subfraction (244 TUs in the base/neutral subfraction versus 61 TUs in the acid subfraction and < 10 TUs in the residual subfraction).

The GC/MS analysis of the base/neutral subfraction showed dichlorvos present in the final effluent at a concentration of 10 µg/L. High levels of two amines produced at Site No. 1, an alkyl diamine and dicyclohexylamine, also were found along with other organic components in this sample. Screening toxicity tests with the two amines found in high concentrations indicated that neither the diamine (LC_{50} = 6 mg/L) nor the dicyclohexylamine (LC_{50} = 16 mg/L) alone or together could have caused the acute toxicity observed in the August 1985 effluent sample. However, historical toxicity data on dichlorvos showed that it was acutely toxic to invertebrates with an LC_{50} of 0.07 µg/L for *Daphnia pulex*, an invertebrate closely related to *D. magna*, the test organism used in this TRE.

Source Investigation

Site No. 1 had an aerosol pesticide packaging operation in which empty containers (formerly containing pesticides including dichlorvos) were washed and the rinse water was discharged into the sewer and subsequently into the wastewater treatment system through the collection sump. In mid-November 1985, the pesticide-packaging operation at Site No. 1 (the presumed source of the dichlorvos) was permanently closed down and moved off-site. Therefore, if dichlorvos (or some other component of the packaging operation) was responsible for the toxicity of the final effluent, then the acute toxicity of the effluent should have decreased in samples collected after the closure of the packaging operation.

Following the closure of the packaging operation, the final effluent was screened three times for acute toxicity, once in November 1985 and twice in January 1986. The LC_{50} values resulting from these tests were 0.6, 81, and 79 percent effluent with TUs of 167, 1, and 1, respectively. Compared with the August 1985 effluent sample which contained 1,111 TUs, the three effluent samples collected after the closure of the packaging operation were much reduced in acute toxicity to *D. magna* indicating that dichlorvos from the packaging operation may have been principally responsible for the toxicity observed previously.

Confirmation of Source or Agent

To confirm that the acute toxicity originally observed in the Site No. 1 final effluent was no longer present, a second effluent fractionation was performed on a final effluent sample collected on February 24/25, 1986 High bisulfite concentrations were present in the effluent sample due to poor operation of the waste treatment system (286 to 290 mg/L SO_3^{2-}) and the sample had to be aerated to oxidize the bisulfite and the pH had to be readjusted to 7 before toxicity testing. After aeration and pH adjustment, the LC_{50} was < 3 percent effluent (>33 TUs), which was a greater than six-fold increase in toxicity compared with the toxicity of the unaerated effluent (LC_{50} = 18 percent effluent or 6 TUs) (Table Al-l).Some of the acute toxicity observed in the unaerated effluent sample may have been due to the low dissolved oxygen caused by the high concentrations of bisulfite present in the effluent sample.

The fractionation and subsequent toxicity testing of the February 1986 effluent sample revealed that the organic fraction was no longer toxic with an LC_{50} > 100 percent (95 to 100 percent survival in 100 percent effluent fraction; effluent fractionated twice). The inorganic fraction, however, exhibited the same toxic behavior as the final effluent with the LC_{50} < 3 percent for the aerated inorganic fraction an LC_{50} of 42 percent (2 TUs) for the unaerated fraction. Some of the acute toxicity of the unaerated inorganic fraction may have been caused by the low dissolved oxygen in the test solutions due to the high bisulfite concentrations in the effluent sample (resulting from inefficient destruction of the bisulfite in the waste treatment process). This behavior indicated that the aeration and/or pH adjustment treatments added toxicity to the sample by altering the effluent components in some as yet unknown manner. In two

Table AI-I. Summary of Toxicity Data on Final Effluent Samples Collected at Site No. 1 from May 1985 to June 1986

Test Species	Date	Test Type	LC_{50} (% Effluent)	Sample Aeration
Fathead minnows	May 1985	24-hr. screen	>50	No
Fathead minnows	August 1985	48-hr. definitive	>100	No
Microtox	August 1985	20 min. definitive	>100	No
D. magna	May 1985	24-hr. screen	>1.0, <6.25	No
D. magna	August 1985	48-hr. definitive	0.09	No
D. magna	November 1985	48-hr. definitive	0.6	No
D. magna	January 1986	48-hr. definitive	81	No
D. magna	January 1986	48-hr. definitive	18 (79)†	No (Yes)
D. magna	February 1986	48-hr. definitive	18 (<3)†	No (Yes)
D. magna	June 1986	48-hr. definitive	>100	No

* EC50

† Number outside of parentheses represents the LC_{50} of the effluent sample before aeration; number within parentheses represents the LC_{50} of the same effluent sample after aeration to remove bisulfite.

subsequent toxicity tests with the inorganic fraction, the acute toxicity decreased (LC_{50} values of 14 and > 50 percent), indicating that toxicity in the inorganic fraction was not persistent.

Although the organic fraction was nontoxic, it was further separated into acid, base/neutral, and residual subfractions and each subfraction evaluated for acute toxicity to confirm that organic components were no longer responsible for the toxicity observed in the Site No. 1 final effluent and to compare GC/MS profiles of the base/neutral subfraction with those of the toxic August 1985 sample. All three organic subfractions were nontoxic (<2 TUs) with LC_{50} values of > 100, > 100, and 80 percent for the acid, base/neutral, and residual subfractions, respectively confirming the elimination of toxicity in the organic fraction. GC/MS analysis of the base/neutral subfraction showed a much "cleaner" sample (i.e. most of the major peaks present in the August 1985 RIC were either absent or greatly reduced in concentration in the February 1986 GC/MS scan) with the absence of dichlorvos and the two amines previously observed in high quantities in the GC/MS analysis of the August base/neutral subfraction.

The unaerated whole effluent sample collected in February 1986 contained 6 TUs with 2 TUs in the inorganic fraction and < 1 TUs in the organic fraction, compared with 1,111 TUs contained in the August 1985 final effluent sample, a 185-fold reduction in toxicity. The acute toxicity observed in the February 1986 sample was isolated in the inorganic fraction whereas the toxicity in the August 1985 sample was isolated in the organic fraction. Toxic organic component(s) were no longer present in the final effluent, but inorganic components were now responsible for the remaining toxicity. A part of the acute toxicity of the final effluent and the inorganic fractions was apparently caused by the high bisulfite concentration which reduced the dissolved oxygen in the test chambers and stressed the test organisms.

To determine the relative toxicity of *D. magna*, the February 1986 final effluent sample (in which no dichlorvos was detected by GC/MS) was subsequently spiked with dichlorvos and evaluated for acute toxicity. The theoretical LC_{50} for dichlorvos in the spiked effluent sample was 0.2 µg/L compared with the calculated dichlorvos LC_{50} for the August 1985 effluent sample of 0.1 µg/L. Thus, dichlorvos could have been responsible for about one-half of the acute toxicity observed in the August 1985 final effluent sample when the pesticide-packaging facility was still operating. These test results provide strong circumstantial evidence that the pesticide-packaging operation (dichlorvos, in particular) was, in large part, responsible for the acute toxicity originally observed in the final effluent at Site No. 1. This is not to say that dichlorvos alone was responsible for the toxicity of the effluent since other changes in the plant operation such as a reduction in amine production were occurring concurrently with the closure of the packaging operation.

Toxicity Reduction Approaches

The pesticide-packaging operation at Site No. 1, the source of the dichlorvos, was permanently closed down and moved off-site, and this in effect provided the method of toxicity control and reduction. Had the packaging operation remained, the following toxicity reduction approaches at the source would have been examined.

Treatability Evaluations

- Carbon and/or resin adsorption of effluent B2a (Figure Al- 1).
- Hydrolytic destruction of the pesticide(s) in effluent B2a.
- Biological removal of the causative toxicant(s) in effluent B2a. This perhaps could have been accomplished by routing effluent B2a through the 20 to 30 day aerated biological treatment tank (Al).

Other Methods Examined

- Inplant controls. Limit the volume of discharge of B2a using recycle procedures.
- Process modifications, Alter rinsing solution and method of cleaning so that a more effective rinse would result, one with less volume of effluent and with better destruction of residual pesticide(s).

Basis for Selection of Method

Not applicable to this case history.

Follow-Up and Confirmation

Effectiveness of Solution

The final sample from Site No. 1 was collected on June 2/3, 1986, fractionated into an inorganic and organic fraction, and the final effluent and each fraction were evaluated for acute toxicity to *D. magna.* The test results showed that neither the final effluent nor the two effluent fraction were acutely toxic (< 2 TUs) to *D. magna* with LC_{50} values > 100 percent for all three tests. The two most comparable data sets were from August 1985 and June 1986 when the wastewater treatment plant was properly operating. These results showed that acute toxicity present in the organic fraction of the August 1985 sample had been eliminated resulting in a nontoxic final effluent at Site No. 1 in June 1986.

The TRE performed at Site No. 1 succeeded in its primary objective in isolating and identifying a causative toxic agent and then determining if the toxicity of the final effluent was eliminated after the identified toxic agent was removed. The original fractionation of the August 1985 final effluent with subsequent toxicity testing and GC/MS analysis of the toxic subfractions showed that dichlorvos, an invertebrate-specific pesticide, may have been responsible for much of the observed toxicity. Independent of this work, the management at Site No. 1 permanently closed down the aerosol pesticide-packaging operation and moved it off-site. After closure, the toxicity of the final effluent was then monitored in the absence of any inputs from the packaging operation. The biomonitoring results showed that in the five final effluent samples collected after the closure of the packaging plant, the acute toxicity in the TUs was 167, 1, 1, 6 and 1 compared with the 1,111 TUs contained in the August 1985 effluent sample.

Final Comments, Recommendations, and Conclusions

A TRE was found to be a useful process to isolate, identify, characterize, and reduce or control toxic components in this particular industrial effluent. The fractionation procedure as designed by Walsh and Garnas (1983) and modified during this study for Site No. 1, was useful in the isolation and identification of the principal toxic component (dichlorvos) in a specific organic fraction (i.e., the base/neutral subfraction). Although variability in toxicity of the final effluent at Site No. 1 occurred during the study period, caused, in part, by an improperly operating wastewater treatment plant, the variability resulted in different effluent components than those originally identified as being the cause of the toxicity. In situations where such variability exists, it would be useful to perform additional toxicity tests when the wastewater treatment plant is operating properly to confirm the results and success of the TRE.

Problems Encountered

The wastewater treatment plant was operating properly during the August 1985 and June 1986 sampling period, in contrast to the two sampling trips in January and February 1986 where high bisulfite concentrations were present in the effluent samples. The high bisulfite concentration resulted in low dissolved oxygen in the test solutions which stressed the test organisms and confounded the interpretation of the test results. The inorganic toxicity observed in February 1986 was not persistent and may have been related to the high bisulfite concentrations present in the effluent because of the improperly operating wastewater treatment plant.

References

Cooney, S.D., W.H. Clement, and R. Clark. *Multi-Purpose Specialty Chemical Plant Toxicity Reduction Evaluation (TRE) Site No.1* .U.S. Environmental Protection Agency, Cincinnati, OH May 1987.

Peltier, W.H., and C.I. Weber (eds.). *Methods for Measuring the Acute Toxicity of Effluent to Freshwater and Marine Organisms.* EPA-600/4-85-013, 3rd ed., U.S. Environmental Protection

Agency, Environmental Monitoring and support Laboratory, Cincinnati, OH (1985).

U S. Environmental Protection Agency. Methods *for Organic Analysis of Municipal and Industrial Wastewater.* EPA-600/4-82-057, Environmental Monitoring and Support Laboratory, Cincinnati, OH (1982).

U S. Environmental Protection Agency. "Development of Water Quality-Based Permit Limitations for Toxic Pollutants, National Policy." *Federal Register,* Vol. 49, No. 48, pp. 9016-9019 (1984).

U.S. Environmental Protection Agency. *Technical Support Document for Water Quality-Based Toxics Control.* U.S. Environmental Protection Agency, Office of Water, Washington, D.C. (1985).

Wall, T.M., and R.W. Hanmer. "Biological Testing to Control Toxic Water Pollutants." *JWPCF,* 59(1):7-12 (1987).

Walsh, C.E., and R.L. Garnas. "Determination of Bioactivity of Chemical Fractions of Liquid Wastes Using Freshwater and Saltwater Algae and Crustaceans." *Environmental Science and Technology,* 17:180-182 (1983).

Section A-2

Case History: Tosco Corporation's Avon Refinery, Martinez, California

Initial Data and Information Acquisition

At the beginning of the study, facility-specific information was obtained regarding the type of facility, regulatory target limits, the design of the existing wastewater treatment system, and existing chemical and toxicological monitoring data for final and internal effluent streams. As an introduction to this case study, the following information is provided.

The Tosco Corporation's Avon Refinery produces refined petroleum products, primarily gasoline and diesel fuel, from domestic crude oils. During the time EA Engineering, Science, and Technology, Inc. conducted this TRE, the Avon refinery had an average crude throughput of 103,100 barrels per day and generated an average of 3.1 million gallons per day (mgd) of process wastes, cooling tower blowdown, sanitary wastes, stormwater runoff, and other wastes from a sulfuric acid plant which is also operated on the site. These wastewaters were treated by the refinery's wastewater treatment system and then discharged into Suisun Bay through a deep-water diffuser which provides at least 10:1 nearfield dilution.

When the project was begun, the regulatory target for the TRE was an end-of-pipe 96-hour LC_{50} value of ≥ 50 percent effluent for the three-spine stickleback. In August 1986, this limit became more stringent (96-hour $LC_{50} \geq 100$ percent effluent).

The refinery's wastewater collection network is served by four sewer systems: the oily sewers, the chemical sewers, the sanitary sewers, and the clean sewers. The oily sewer system conveys oily process waters from all process areas of the refinery to the API Separator/Dissolved Air Flotation (DAF) Unit. The DAF Unit discharges to the primary canal. The chemical sewer system carries foul water stripper bottoms to near the head of the primary canal where it is joined with the sanitary sewer system and the acidic effluent from the chemical plant. This combined stream is commingled with the effluent from the DAF in the primary canal. The effluent from the ammonia recovery unit also enters the head of the primary canal in the same vicinity via a dedicated, above-ground pipeline. These combined streams constitute the feed water for the refinery's wastewater treatment plant.

The wastewater treatment system and its major influent process streams are diagrammed in Figure A2-1. After the two aeration ponds, wastewater is pumped to the 12 RBCs which are situated in four parallel trains of three units in series. Flow is normally split equally among all four trains. Chemical feed facilities exist for feeding powdered activated carbon (PAC) for adsorption of toxicants. Ferric chloride ($FeCl_3$) and polymer are injected as flocculent aids to enhance settling in the downstream clarifiers.

Flow from the RBCs is split and sent to two 75-ft-diameter clarifiers for solids removal by sedimentation. Clarified water is sent to a multimedia filter for final removal of colloidal and particulate matter prior to discharge to the clean canal. In the clean canal, the treated water joins the effluent from the clean sewer system for discharge via a deep-water diffuser.

Toxicity Identification Evaluation (TIE)

The TIE for this program consisted of four elements:

- Selection of a cost effective toxicity monitoring tool, and routine screening of the final effluent,
- Chemical fractionation studies to identify classes of toxic constituents in the final effluent,
- Specific chemical analyses to identify specific toxic elements and/or compounds in the final effluent, and
- A source investigation study to identify the ultimate source(s) of toxicity within the facility.

Each of these TIE components is discussed below.

Selection of a Monitoring Tool

As a first step, three commonly measured chemical parameters (i.e., COD, BOD, and TOC) were

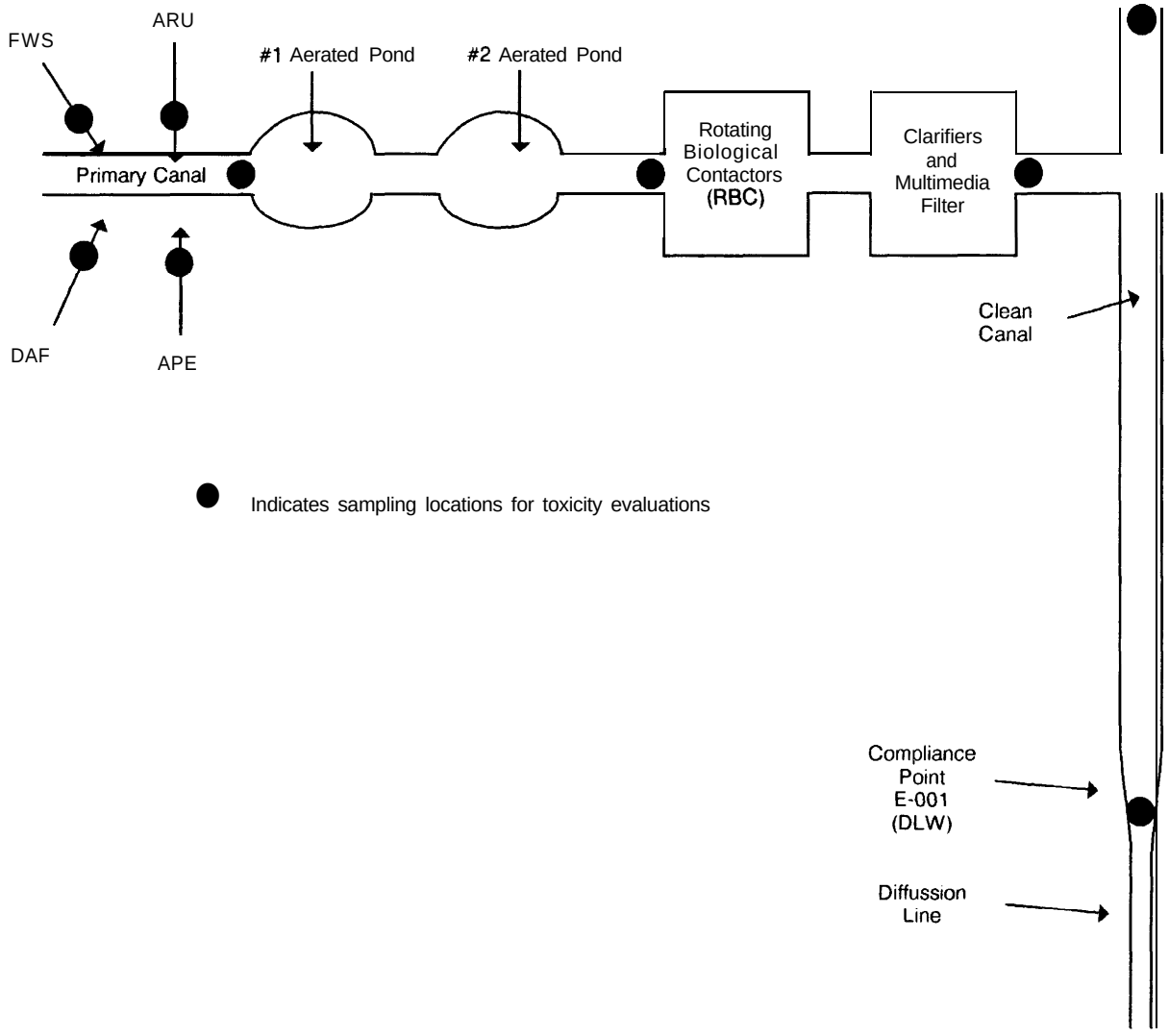

Figure A2-1. Conceptual diagram of Tosco's wastewater treatment system with designation of sites sampled during various elements of this study. In this figure, the four process streams which enter the primary canal are the effluent from the foul water strippers (FWS), Ammonia Recovery Unit (ARU), the Dissolved air flotation Unit (OAF), and the Acid Plant Effluent (APE).

evaluated as cost-effective surrogates for the fish bioassay using an existing facility-specific database. However, correlation coefficients were low, ranging from -0.04 to -0.27, which eliminated consideration of these parameters as viable surrogate indicators of fish toxicity.

Next, the use of a short-term biological monitoring system (i.e., Microtox) was evaluated. Although this test system yields quantitative results in approximately one hour, and has been shown to respond in a sensitive manner to refinery effluents, it was deemed necessary to clearly demonstrate that the Microtox system would yield results which were similar to the three-spine stickleback test. This correlation, obtained by performing side-by-side Microtox and stickleback bioassays on a number of waste stream samples, indicated that the Microtox bioassay test serves as an adequate screening tool for determining the relative toxicities of process and treatment waste streams from this facility. Although the Microtox test endpoint (20-minute EC_{50}) was not an exact predictor of the fish bioassay endpoint (96-hour LC_{50}), it was felt that Microtox was adequate for cost-effectively ***screening*** effluent toxicity for the following reasons:

- In all cases tested, if toxicity was identified by the fish bioassay, the Microtox also identified toxicity.
- Microtox always indicated at least as much toxicity as the fish bioassay, and often more--eliminating the possibility of a false negative result.

Based on the results of the aforementioned evaluation, Microtox was selected for characterizing

the magnitude and variability of final effluent toxicity. This was accomplished by analyzing 24-hour composite final effluent samples 34 times over a 4-month period (April-August 1985). A statistical evaluation of the results indicated a mean toxicity (as a 20-minute Microtox EC_{50}) of 29.0 percent effluent with an associated standard deviation of 11.7 percent. During the monitoring period, the maximum and minimum EC_{50} values were 100 percent and 1.1 percent effluent, respectively. These Microtox 20-minute EC_{50} results can be expressed in terms of three-spine stickleback 96"hour LC_{50} results by using an adjustment factor that is based on the correlation study discussed above. Based on this relationship, the Avon Refinery effluent was estimated to have a mean 96-hour stickleback LC_{50} of 59 percent effluent with a standard deviation of 30 percent effluent. This extrapolated toxicity value was sufficient to pass the old effluent toxicity limit (LC_{50} = 50 percent), but was considerably below the revised limit (LC_{50} = 100 percent) which became applicable in August 1986.

Chemical Fractionation

In order to provide more information about the final effluent, a fractionation procedure (Walsh and Garnas 1983) was implemented in an attempt to identify the number and types of chemical classes responsible for final effluent toxicity. In this procedure the effluent was separated into organic and inorganic fractions and each tested for toxicity. If the organic fraction proved toxic, it was further separated into neutral, base, and acid fractions and each of these was tested for toxicity. If the inorganic fraction proved toxic, it was separated into cationic and anionic fractions and each of these tested for toxicity.

The specifics of the fractionation procedure are as follows. On a weekly basis, from 3 June to 12 August 1985, composite samples of final effluent were collected. Each whole effluent sample was analyzed for toxicity via Microtox and then 50 ml was passed through a 10-ml column packed with 5 ml of XAD-4 polystyrene resin. The water elutriate, which contained the inorganic chemicals in the wastewater sample, was then analyzed for toxicity via Microtox. The XAD-4 column was then eluted with 10 ml of acetone. The acetone elutriate, which contained the organic chemicals in the wastewater sample, was evaporated to less than 0.5 ml on a hot water bath, resuspended in 50 ml of distilled water, and analyzed for toxicity via Microtox.

If the inorganic fraction exhibited toxicity, it was further separated using anionic (1-x8) and cationic (50w-x8) exchange resins. The resulting subfractions were assayed for toxicity via Microtox, indicating whether anions and/or cations were responsible for inorganic toxicity. If the organic fraction exhibited toxicity, it was sequentially extracted with a mixture of methylene chloride and water under basic and acidic conditions. The resulting subfractions were assayed for toxicity via Microtox, indicating whether neutral, basic, and/or acidic compounds were responsible for organic toxicity.

The results of this fractionation effort indicated that final effluent toxicity was almost always (11 out of 12 times) attributable to organic constituents. In addition, the most toxicologically active organics appeared to be the neutral and, to a lesser extent, the acidic classes. During this June-August sampling period, the refinery and the wastewater treatment system were operating normally and the toxicity observed was expected to be typical.

Single Chemical Analyses

Two approaches were used in an attempt to identify specific chemicals which might be responsible for final effluent toxicity. The first was a comparison of GC/MS results with maximum no-observable effect levels (NOELs) reported in the toxicological literature. The second was a computerized file of routine effluent monitoring data collected over the years by refinery personnel. These data were analyzed for significant positive correlations between toxicity and any of the commonly measured chemical parameters.

GC/MS Data

As described above, the fractionation process indicated that final effluent toxicity was routinely associated with the organic fraction. Therefore, on three occasions final effluent samples were analyzed for volatile and semivolatile organic compounds using U.S. EPA Methods 624 and 625. These analyses were designed to identify all priority pollutants as well as any major non-priority pollutant organic compounds which were detected and could be identified with the data system used for quantitation.

Through the three analyses, a number of organic compounds were identified in the final effluent (E001) samples. There was considerable variability between samples with regard to which compounds were identified and their concentrations. No organic compounds were identified in the March sample; 10 organic compounds were quantified in the April sample (ranging in concentration from 2 µg/L for toluene to 120 µg/L for 2,3,4-trimethyl-3-cyclopenten-l-one); and six organic compounds were quantified in the December sample (ranging from 9 µg/L dibenzofuran to 130 µg/L for 2-cyclopenten- l-one, 3 methyl).

A comparison of these concentrations with values reported in the toxicological literature failed to

identify any of the detected constituents as the probable cause of final effluent toxicity. For several of these compounds (e.g., most of the ketones), virtually no data could be found concerning their aquatic toxicities. For those compounds for which significant toxicological data do exist (e.g., isophorone, acetone, toluene) the measured concentrations were well below known effect concentrations.

Routine Monitoring Data

Tosco maintains a computerized database of the results of analyses performed on process and wastewater streams. Included in this database are chemical, physical, and toxicological properties of the final effluent. Consequently, it was possible to directly compare concentrations of several chemical constituents found in the final effluent with the corresponding fish toxicity results and evaluate for positive correlations. Included in this evaluation were pH, TSS, phenols, ammonia, oil and grease, chromium, zinc, sulfur, chlorine, DO, temperature, and flow. Review of these results indicated no significant correlations between final effluent toxicity and any of the chemical and physical parameters considered. Correlation coefficients ranged from -0.31 for TSS to 0.20 for pH.

Source Investigation Study for Toxicity

The source investigation study was designed to identify the proximal and ultimate source(s) of final effluent toxicity. Through a combination of sampling and experimental manipulation, two issues were addressed:

1. What role does the wastewater treatment system play in final effluent toxicity--does it reduce, increase, **or** alter the toxicity of influent process streams? and

2. Which process streams are the ultimate sources of final effluent toxicity?

Both issues are discussed below.

Toxicity Reduction Through the Existing Treatment System

At five locations (Figure A2-1) along the treatment process, samples were analyzed for total toxicity, fractionated chemical class toxicity, and specific chemical composition. These results were synthesized to indicate how well the treatment system functions and how it alters toxic constituents during each stage of treatment.

Whole-Effluent Toxicity

The Microtox data indicate that the overall reduction in toxicity from the inlet to the #1 aerated pond to the final effluent compliance point was approximately 83 percent. Of this total, approximately 90 percent of it occurs in the aerated ponds, 7 percent in the RBCs, and 3 percent in the clean canal (Figure A2-1).

Chemical Class Toxicity

Samples from each of the five sampling points were fractionated to examine the chemical characteristics of the toxicity. The results indicated that toxicity reduction involved the differential elimination of various classes of toxic constituents. The influent to the #1 aerated pond was quite toxic, with inorganic constituents making the greatest constitution. The generally lower toxicity of the organic fraction was apparently due about equally to neutral and acidic compounds.

After passing through the aerated ponds, the approximately 75 percent reduction in toxicity was generally associated with the total loss of the toxic inorganic fraction and a moderate decrease in organic toxicity. Transit through the RBCs and down the clean canal resulted in minimal toxicity reduction due to the removal of some organic constituents (principally acidic compounds).

Process Stream Evaluation

By monitoring the toxicity of major process streams influent to the treatment system and experimentally determining the degradability of each process stream's toxicity, the ultimate sources of toxicity were investigated. The following four major process streams are influent to the wastewater treatment system:

- Ammonia recovery unit effluent (ARU)
- Foul water strippers bottoms (FWS)
- Dissolved air flotation effluent (DAF)
- Acid Plant effluent (APE)

Each process stream was analyzed for whole stream toxicity, fractionated chemical class toxicity, and individual chemical composition. Degradation studies were performed using bench-top models of the treatment system and evaluating the reduction in toxicity experienced by individual process streams. Synthesis of these two sets of results identified which process streams were the ultimate source of the toxic constituents which were found in the effluent from the wastewater treatment system.

Acute Toxicity Monitoring

From the resulting data, it was apparent that the wastewater from the ammonia recovery unit (ARU) and foul water strippers (FWS) were the most toxic (172 and 83 acute toxicity units (TUs), respectively). These streams make up approximately 14 and 24 percent, respectively, of the total wastewater flow entering the #1 aerated pond. On the other hand, the effluent from the dissolved air flotation unit (8.8 TUs) which contributes 62 percent of the total flow, was considerably less toxic. The acid plant effluent was nontoxic.

Chemical Class Toxicity

By fractionating 24-hour composite samples, it was determined that the toxicity in both the ARU and FWS wastewaters was due to a combination of organic and inorganic constituents. In addition, the relative contribution made by each group was highly variable. When inorganic toxicity was present, it was primarily anionic in nature and organic toxicity was due to a mixture of neutral and acidic compounds. The toxicity in the DAF wastewater, on the other hand, had no inorganic component and was due almost exclusively to neutral and acidic organic compounds.

Specific chemical analyses of the process streams were limited to the identification of toxic organic constituents. In general, the data were fairly consistent with the fractionation results. The DAF effluent contains mostly neutral organics, some acidics, and no basic compounds. The FWS effluent showed a somewhat different pattern with much higher concentrations of acidic organics, considerably lower concentrations of neutrals, and again no basics. The ARU, on the other hand, was much different from either of the other two processes streams in that high concentrations of phenols were found along with substantial concentrations of amines. Neutral organics were not prevalent in the ARU effluent.

Biodegradability of Process Stream Toxicity

This study element was designed to address the issue of the degradability of the toxicity of each process stream as it passes through the treatment system. Due to operational constraints, this issue could not be evaluated directly because the system could not be manipulated to receive only one process stream at a time. Therefore, it was necessary to use bench-top models (i.e., microcosms) as surrogates for the treatment system and predict actual process stream degradability from the model results.

The results of the microcosm degradability tests indicated that the toxicity in the three major process streams was readily (and approximately equally) degradable. There was some loss of biodegradability when high (>50 percent) concentrations of a particular process stream were used. However, except for the DAF, this was of no concern since these elevated concentrations did not occur in the wastewater treatment system.

Toxicity Reduction Approaches

The results of the final effluents and process stream characterization indicated that neutral organic chemicals were the primary cause of toxicity and that their ultimate source(s) were probably the wastewaters produced in the ammonia recovery unit (ARU) and foul water strippers (FWS). Therefore, various treatment options were considered which might be successful at removing neutral organics from either the final effluent or the ARU and FWS process streams. To date, this study at the Avon Refinery has only partially gone through the toxicity reduction feasibility phase. Several treatment options are currently under consideration by Tosco Corporation. Included among these are the use of activated carbon and increased residence time in surface impoundments. In-depth evaluations are planned for all promising options to assess their chances for success from the technical, economic, and regulatory perspectives. Tosco Corporation is still in the early phases of these evaluations and the data are insufficient to allow selection of a final treatment option.

Bench-top feasibility-level studies were performed to ascertain whether one option, activated carbon, could reduce toxicity in the final effluent and the ARU process stream to levels which would ensure compliance with the mandated effluent toxicity limit. This was accomplished by the performance of batch experiments using seven different brands of activated carbon and analyzing the treated effluents via Microtox.

The results obtained from these batch equilibrium studies indicated that all six carbons tested could effectively treat the final effluent to the acute toxicity criterion level. However, the concentration of carbon required varied considerably between brands (between 100 and 700 ppm).

Similarly, all seven carbons tested could effectively treat the ARU process stream such that the final effluent will be in compliance. As before, the concentration of carbon required to meet this criterion varied considerably between brands (between 1,000 and 2,000 ppm). Based on the experiences gained during this project, the following insights concerning the evaluation of treatment options are made:

1. Technical feasibility can be screened at the bench scale level, but can only be verified through pilot

through pilot scale plants operating under actual field conditions.

2. Economic evaluations must consider both the capital and operating costs of the project, with special emphasis on future trends in the availability and cost of disposal for any waste generated.

3. The evaluation of a treatment option must consider its capacity to cost-effectively meet potentially more stringent regulations.

4. Caution must be exercised when solving a water quality toxicity problem by transferring it to another medium (e.g., solid waste as with carbon). Environmental concerns are likely to diminish or eliminate the attractiveness of such a solution over time.

These items are not intended as a definitive list of concerns which must be addressed in evaluating treatment options. However, they should provide a starting point for the design of the evaluation program.

Follow-Up and Confirmation

As stated above, a final toxicity reduction solution has not been selected although preliminary bench scale testing has indicated that activated carbon will reduce final effluent toxicity to acceptable levels.

Problems Encountered

During this study, a number of methods and techniques were used in the course of identifying the causes and sources of toxicity. Some of these (e.g., the use of microcosms in degradation studies) were primarily research tools adapted to a real world situation. These did not have standard protocols and required some innovation in their design and interpretation. Planned process unit turnarounds, and unplanned upsets occurred occasionally, resulting in abnormal effluent quality. These events provided insight into possible effluent variability, but at the same time made performance of planned evaluations difficult.

References

ÈA Engineering, Science, and Technology, Inc. *Toxicity* Reduction. *Evaluation* at the Tosco *Corporation Avon Refinery, Martinez, California.* Summary prepared for U.S. Environmental Protection Agency Office of Water Enforcement and Permits, Washington (1987).

Fluor Daniels and EA Engineering, Science, and Technology, Inc. Tosco *Avon Refinery - Wastewater Treating Studies.* Prepared for Tosco Corporation, Martinez, California (1987).

Walsh, G.E., and R.L Garnas. "Determination of Bioavailability of Chemical Fractions of Liquid Wastes Using Freshwater and Saltwater Algae and Crustaceans." *Environ. Sci. Technol.*, **17:180-182 (1983).**

Section A-3

Case History: Martinez Manufacturing Complex, Shell Oil Company

Introduction

The California Regional Water Quality Control Board (CRWQCB) regulates the quality of effluent discharged from Shell Oil Company's refinery in Martinez, California, via an NPDES permit. Since the early 1970's the facility's whole effluent acute toxicity limit has become more stringent, increasing from a static acute LC_{50} value of > 40 percent effluent, to a newly revised limit (effective 20 August 1986) which required LC_{50} values > 100 percent effluent based on flow-through acute testing using the three-spine stickleback (*Gasterosteius aculeatus*).

In the early 1970s, extensive chemical and toxicological research was conducted by Shell to investigate the facility's effluent. Supplemental studies (conducted in 1976 and 1980) (Hanson 1976, 1980) examined the causes of the observed whole effluent toxicity. Constituents implicated in these studies included oil and grease, polymers and ammonia.

The information presented in this case study is the result of the above requirement and is derived from several research efforts conducted from 1976 to 1985. These studies resulted in specific recommendations for the plant which included improved treatment system operation, changes in the polymer addition, and more aggressive in-plant source controls.

Initial Data and Information Acquisition

Plant Description

Shell Oil Company's Martinez Manufacturing Complex (MMC) produces refined petroleum products, primarily gasoline, diesel fuel, lube oils, and greases. As with many large industrial complexes, plant operations may vary over time. Process wastes are treated in a central wastewater treatment facility which includes oil/water separation, biological oxidation, secondary clarification, and tertiary filtration. MMC discharges through a single deep water diffuser into an estuarine environment at a rate of approximately 4 million gallons per day (MGD).

Toxicity Identification Evaluation (TIE)

Characterization and Fractionation

To meet anticipated toxicity limits, a program was initiated to investigate the toxicants present in the final effluent. Based on plant operations experience, ammonia and oil and grease *were* among the potential candidates. Therefore, an investigative procedure was developed to determine if these (or other chemicals) were the primary toxic agents.

In 1976, effluent was obtained from a point just prior to discharge for use in the analyses. The fractionation/characterization procedure involved freon extraction of acidified wastewater to remove oil and grease, followed by nitrogen stripping at alkaline pH to remove ammonia. Oil and grease and ammonia were also added back to the "stripped" sample to determine if these components were the only toxic agents removed during the extraction and stripping procedures.

Toxicity tests and chemical analysis for a specific group of parameters were conducted on the complete effluent and at each stage of the extraction process. However, after collecting and analyzing four samples, the unadulterated whole effluent apparently became (acutely) nontoxic and the testing program was suspended. Analysis of the collected data revealed some information. The toxicity of the effluent decreased after the removal of the oil and grease fraction and toxicity increased after the oil and grease was added back in. However, there were not enough data to make a precise estimation of the toxicity of the oil and grease fraction. Analysis of the oil and grease extract using infrared and ultraviolet absorbance procedures indicated the presence of naphthenic acid compounds with minor amounts of amines and aromatic hydrocarbons. The simplest naphthenic acid (cyclohexane carboxylic acid) is also reported to be toxic at concentrations of 5-7 mg/L, levels approaching those observed in the wastewater. The major source of naphthenic acids in MMC wastewater was identified as the wash water used during crude oil desalting. Naphthenic acid was

shown to be most toxic at low pH (Shell Oil Company 1986).

Ammonia levels were consistently low because of nitrification in the biological treatment system during the earlier studies, and this was believed to be one of the major reasons why the effluent remained essentially non-acutely toxic.

Recognizing that the acute toxicity of the waste discharge had for all practical purposes disappeared, a program was initiated to investigate what caused the disappearance. Daily toxicity tests were begun on final effluent, and various refinery processes and in-plant waste streams were monitored to identify relationships between toxicity and potential sources of toxic wastes whenever the waste stream exhibited acute toxicity. In addition to daily acute toxicity tests, various waste streams were monitored for ammonia, nitrate and nitrite nitrogen, organic nitrogen, TSS, oil and grease, COD, and TOC.

Of the 37 different manufacturing processes, there appeared to be a strong cause/effect relationship between the chemical manufacturing process which produces diallylamine (DAAM plant), concentrations of ammonia in the effluent, and effluent toxicity. Amine compounds identified in the effluent were ethylenediamine, monoallylamine, diallylamine, triallylamine, dimethylaminopropylamine, and polyethyleneimine, a polymer used during the flocculation phase of waste treatment. It was not clear how amines reacted during effluent treatment to cause toxicity and there is some evidence that: (1) amines may be converted to ammonia during biotreatment; (2) some amines may pass through biotreatment at high concentrations which may be toxic; and (3) amines may inhibit nitrification of ammonia. All three methods of actions are possible depending on circumstances.

A third study (Shell Oil Company 1986) was conducted in 1984 and 1985 to identify the sources of toxicity in the biotreater effluent. Through the review of the above studies, naphthenic acids, ammonia, vanadium, and a polyethyleneimine polymer used for coagulation in the secondary dissolved air flotation clarifier were selected as the most significant contributors to effluent toxicity for which dose-response data should be developed. Although earlier studies identified organic nitrogen compounds (amines) as potential sources of toxicity, control measures implemented between 1976 and 1979 sufficiently reduced concentrations of amines in the final effluent.

The objective of this study was to determine a dose-response relationship for each constituent in the effluent. Toxicity tests were performed using non-acutely toxic biotreater effluent and spiking with the component of interest.

For oil and grease, the residue was toxic to fish when added to a non-toxic effluent at a concentration of 12 to 25 mg/L. Because the oil and grease fraction was observed to consist primarily of naphthenic acids, toxicity tests were also performed using refined naphthenic acid and showed a 96-hour LC_{50} in the range of 5 mg/L which is consistent with published data. However, it is difficult to relate the toxicity of naphthenic acids to oil and grease because of the complex nature of oil and grease.

The acute threshold effect concentration (concentration in the effluent which results in an $LC_{50} < 100\%$ effluent) for ammonia in the Martinez Refinery biotreater effluent was between 0.9 and 1.0 mg-N/L un-ionized ammonia. Within the pH range of the biotreater effluent, the acutely toxic threshold concentration was expected to be above 20 mg/L as total ammonia nitrogen.

Although vanadium produced toxicity in the effluent in the 6 to 16 mg/L range, concentrations of approximately 5 mg/L were designated as concentrations of concern.

For polymer toxicity, the bioassay was not as simple. Because the concentration of the polymeric flocculent in the effluent is a function of its adsorption behavior on activated sludge, toxicity tests to determine the toxicity of free polymer were conducted with synthetic seawater. The resulting 96-hour LC_{50} for polyethyleneimine (PEI) and DMAEM/AM were determined to be in the range of 5-15 mg/L and 30-50 mg/L, respectively. Because these concentrations represent free flocculent in solution and not applied dosage during waste treatment, adsorption isotherms were developed for biomass generated in the activated sludge pilot units treating the MMC wastewater. Both the PEI and the DMAEM/AM polymers were used as adsorbates. Isotherms were determined by adding known amounts of flocculent to 1-L samples of biomass, mixing, settling the biomass, and analyzing the supernatant for residual flocculent concentration. The amount of flocculent adsorbed to the biomass was calculated by performing a material balance on the liquid phase. This allowed for the estimation of flocculent in solution given a specific amount of biomass in the wastewater flow, flocculent dosage rate, and the adsorptive capacity of the given flocculent (either PEI or DMAEM/AM).

This study showed that not only did free PEI cause toxicity to fish, but it also inhibited both the biodegradation of oil and grease (specifically naphthenic acids) and the nitrification process which further contributed to toxicity because of the

resulting high residual effluent concentrations of naphthenic acid and ammonia.

Confirmation of Toxic Agents

Once potential toxic agents were identified, their toxicity in the effluent had to be confirmed. This was done using several methods. Through fractionation procedures described above, the toxicity of the effluent was shown to decrease once the oil and grease fraction had been removed. Furthermore, the individual addition of oil and grease, ammonia, vanadium, and amines to a nontoxic effluent increased the toxicity of that effluent to that expected in a similar toxic effluent.

In order to quantify the extent to which each toxicant contributed to the total toxicity, weekly acute toxicity tests were conducted for approximately one year using three-spined stickleback fish. In addition to the toxicity test, each sample was analyzed for an extensive list of potential pollutants. For each of these pollutants, their toxicity was determined through a literature search. Because the fractional acute toxicities of waste constituents are generally additive, it was hypothesized that overall toxieity should be equal to the sum of each individual constituent's toxicity. This is mathematically expressed as $TC_t = C_a/TL50_a + C_b/TL50_b$ --- $C_n/TL50_n$

where

TC_t = total effluent toxicity in toxic units

$C_{a...n}$ = concentration of each individual waste constituent

$TL50_{a-n}$ = concentration of waste constituent which causes 50 percent mortality

Using this equation, a multiple linear regression equation was derived and the statistical significance of each constituent in reference to the overall toxicity could be determined. A correlation coefficient (R^2) of 0.59 was derived. The regression explains approximately 62 percent of the toxicity. Based on this additive approach, significant contributors of toxicity were identified as ammonia (18 percent), naphthenic acids (32 percent), and suspended solids (12 percent). The balance of 38 percent unexplained toxicity was attributed to the variability of the toxicity tests or the polymer, PEI, which was later identified.

Toxicity Reduction Approaches

At this point, oil and grease (naphthenic acids), ammonia, amines (organic nitrogen), flocculation polymers (PEI), and suspended solids had been identified in at least one of the studies performed as contaminants of concern. Toxicity reduction approaches for each of these contaminants are discussed below.

Oil and Grease

The major source of naphthenic acids (oil and grease) in MMC effluent was identified as wash water from the crude oil desalter and the toxicity from this source was attributed to partitioning of water soluble naphthenic acids from the crude oil into the water phase. A Brine Deoiling Unit (BDU) was subsequently installed to reduce the concentration of naphthenic acids discharged to the aqueous effluent treatment facilities. Since the naphthenic acids are water soluble, they still partition into the water phase to some degree and subsequently continue to be present in the aqueous effluent.

Bench scale tests indicated that powdered activated carbon (PACT) addition to activated sludge can reduce effluent toxicity (Shell Oil Company 1986). In subsequent pilot scale slip-stream studies onsite, 50 mg/L (basis feed flow) of powdered activated carbon completely removed acute toxicity to stickleback after addition of 20 mg/L naphthenic acid to the biotreater feed. In contrast, a conventional biotreater fed the same spiked feed yielded an effluent with an L& of about 60 percent. Emergency PACT addition to the MMC biotreater for toxicity reduction following upsets or spills may be possible. Potential adverse effects or PACT (clarification, corrosion, equipment wear) should be considered before full scale use is implemented. However, recent biotreater operating performance shows that when the proposed 10 mg/L oil and grease NPDES limitation is met, the concentration of oil and grease (i.e., naphthenic acids) is kept below the effect concentration and a nontoxic effluent is produced.

Ammonia

The most effective method of controlling effluent ammonia levels is to sustain nitrification in the activated sludge basin. Since February 1985, the Martinez refinery biotreater has sustained nitrification, thereby reducing the effluent total ammonia concentration to less than 1 mg-N/L. Proper control of sludge age, pH, and inhibitory spills (i.e., source control) in addition to avoiding inhibitory additives such as the polyethyleneimine type water clarification polymers should allow for continued nitrification and eliminate ammonia as a contributor to fish toxicity.

Amines (Organic Nitrogen)

Ethylenediamine is produced as a waste gas in one of the chemical manufacturing processes. Prior to May 1976, this gas was discharged in series through a water scrubber and an incinerator, and the alkaline

scrubber water was periodically drained to the sewer. When it was realized that this waste was aggravating effluent ammonia and toxicity, the water scrubber was bypassed and the gas incinerated directly. By this relatively simple modification, this source of effluent toxicity was eliminated.

In the Diallylamine (DAAM) plant, wastewater is discharged after distillation of amines in alkaline solution. A specific ion electrode instrument, sensitive to the total of ammonia and amines, was installed to continuously monitor this wastewater which is diverted to a storage tank and rerun whenever ammonia or amine levels are high. The ability to control amine losses and the impact of this process on effluent quality was monitored closely after the plant started operation in March 1977. However, studies in 1979 showed that organic nitrogen compounds were probably negligible contributors to toxicity and the efforts to control the toxic amines described above were apparently successful.

Flocculation Polymers (PEI and DMAEM/AM)

Utilizing the adsorption equations developed to estimate free (dissolved) flocculent, it was estimated that free PEI flocculent would be present in the effluent whenever the applied flocculent dosage exceeds 40 mg/L. During TSS excursions, flocculent doses in excess of 80 mg/L have been used at MMC. Estimates on the PEI concentration in the final effluent would be subject to a large degree of uncertainty. However, there is a strong possibility for PEI in the effluent and potential for toxicity due to PEI. Therefore, use of this flocculent was discontinued. In contrast, the DMAEM/AM flocculent currently in use would have to be applied at a dosage in excess of 150 mg/L before effluent toxicity due to flocculent would be expected. This is due to the stronger adsorption characteristics of DMAEM/AM.

Suspended Solids

Suspended solids are in part biodegradable, and thus are probably at least partially nonpersistent. The quantity of suspended solids in the wastewater discharge is very minor compared to naturally occurring silt suspensions in the tidal estuary. Therefore, the minor discharge of suspended solids probably is of little consequence as related to persistence of acute toxicity.

Follow-Up and Confirmation

As noted in the introduction, the three studies described in this case study spanned over eight years, and although oil and grease and ammonia were identified as toxicity contributors in each study, amines, specific flocculent polymers, and suspended solids were identified in only one study.

Problems Encountered

Conducting a toxicity reduction evaluation on an essentially non-acutely toxic effluent is difficult. However, the investigators in this study took an innovative approach. By correlating observed effluent toxicity to manufacturing processes, changes in processes could be related to periods when the effluent became non-acutely toxic. Without testing each process waste stream, the investigators could narrow their work scope and focus on those processes which were correlated with effluent toxicity.

Water Quality-Based Toxicity Limit

After confirming sources of toxicity and the non-persistent nature of toxicants, MMC applied for an exception to the CRWQCB toxicity limit of a 100 percent effluent LC_{50} using the three-spine stickleback. The exception was proposed based on meeting three California criteria: (1) effluent dilution is rapid and greater than 10 to 1 on discharge, (2) effluent toxicants are non-persistent and (3) beneficial uses of the receiving water are protected.

Shell used U.S. EPA's water quality-based approach as outlined in the Agency's Technical Support Document (U.S. EPA 1985), to develop a protective water quality-based toxicity limit.

Acute toxicity tests using six species, and chronic toxicity tests using three species, were conducted over a 12 month period to determine sensitive species and acute to chronic ratios. Additionally, these data were used to relate effluent toxicity to the three-spine stickleback to the organisms used in this study. Furthermore, dye and effluent modeling studies were performed to determine plume dilution. This demonstration supported a dilution of 33:1 and a protective water quality-based effluent limit of $LC_{50} \geq 54$ percent effluent.

References

Hanson, J.R. "Progress Report on Wastewater Discharge Toxicity Study Program. Shell Oil Company Martinez Manufacturing Complex." Submitted to California Regional Water Quality Control Board, December 1, 1976.

Hanson, J.R. "Technical Report on Toxicity of Waste Discharge. Shell Oil Company Martinez Manufacturing Complex." Submitted to California Regional Water Quality Control Board, June 26, 1980.

Shell Oil Company. "Derivation of Water Quality-Based Toxicity Effluent Limits for the Shell Oil Martinez Manufacturing Complex." Prepared by EA Engineering, Science and Technology, Inc. Lafayette, California. (1986). 48 pp.

U.S. Environmental Protection Agency. ***Technical Support Document for Water Quality-Based Toxics*** Control. EPA 440/4-85-032 Office of Water, Washington, D.C. (1985).

vanCompernolle, R, et al. ***Potential Contributors to Fish Toxicity in the Martinez Manufacturing Complex Biotreater Effluent.*** August 9, 1985.

Section A-4
Case History: A North Carolina Textile Mill

Introduction

Glen Raven Mills, Inc., Consumer Products Division, produces ladies hosiery at its mill in Alamance County, Altamahaw, NC. Treated process and domestic wastewater from the mill is discharged into the Haw River and comprises 0.8 percent of the river volume under 7Q10 flow conditions (seven consecutive day flow with a recurrence interval of ten years). Having determined that WWTP effluent was toxic, The North Carolina Department of Environmental Management required Glen Raven to implement an aquatic toxicity monitoring program in early 1985, establishing a 48-hour acute static *Daphnia pulex* LC_{50} of >90.0 percent as a toxicity reduction goal.

Effluent bioassay testing began in February 1985. The following month, Glen Raven Mills enlisted Burlington Research, Inc. (BRI) to conduct Toxicity Identification and Reduction Evaluations. The final phase of the study was completed in March 1986.

Initial Data and Information Acquisition

Process Description

Glen Raven Mills dyes pantyhose (Nylon 6 and 6.6) with acid and disperse dyes in rotary dyeing machines. Prior to the TRE, liquor ratios of 30:1 (30 pounds of water per pound of goods dyed) were typical for the dyeing machines being used. Among the major process chemicals used in addition to dyestuffs are surfactants, chelating agents and fabric softeners, which serve as fabric processing aids prior to dye applications.

The raw process water being utilized in the dyeing systems is obtained from the Haw River, upstream of the plant. Water is flocculated with alum and clarified prior to use.

Wastewater Treatment Plant Description

Glen Raven maintains an activated sludge WWTP for the treatment of process and domestic wastewaters. The plant consists of upright fiberglass equalization tanks, an 80,000 gallon capacity concrete activated sludge basin, and concrete rectangular clarifier and chlorine contact chambers. Permit flow for the WWTP is 0.045 MGD but flows prior to the TRE averaged 0.027 MGD, with frequent hydraulic overflows appearing during production peaks.

Wastestreams treated by Glen Raven's WWTP are primarily composed of discharges from dye processes and discharge of proprietary yarn spinning applications. Over 90 percent of the process flow comes from dyeing operations but there is some contribution of domestic wastes even though septic tank treatment is applied to most domestic waters.

Characteristics of Influent and Effluent

Glen Raven is required to measure selected effluent chemical parameters twice monthly. A review of composite effluent measurements prior to the initiation of the TRE indicates average parameter levels of 43.5 and 365.8 mg/L for BOD5 and COD, respectively; 33.9 mg/L for TSS, <0.01 mg/L for sulfide, < 0.01 mg/L for phenols and < 0.05 mg/L for total chromium. Metal analyses conducted in May and June reflect average copper levels of 0.446 mg/L and average zinc levels of 0.498 mg/L. Generally, the effluent can be characterized as having a high COD pass-through and potentially toxic concentrations of total metals.

A review of monthly 48-hour acute static *D. pulex* LC_{50} values for tests conducted on composite effluents during the early months of toxicity monitoring indicates that values ranged from a low of 38.1 percent to a high of > 90.0 percent, and averaged 63.6 percent. Though the LC_{50} goal of > 90.0 percent was met in March, June and July 1985, the effluent has a history of dramatic fluctuations in LC_{50} values (Figure A4-1).

Toxicity *Reduction Evaluation (TRE)*

Effluent Toxicity

The water flea *D. pulex* was used as the test species prior to and during the TIE acute static toxicity monitoring program of Glen Raven's effluent. Test organisms were obtained from cultures maintained

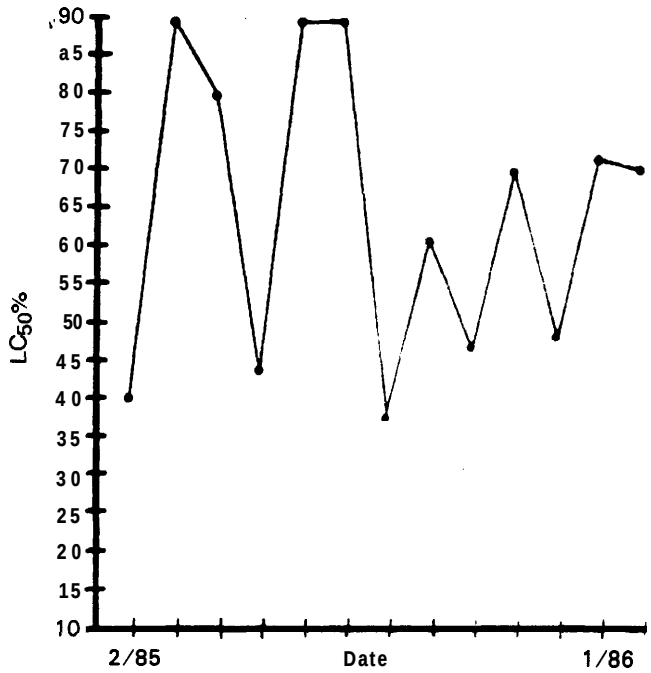

Figure A4-1. Early **TRE 48-hour *D. pulex* acute static bioassay history, Glen** Raven Mills.

by BRI and bioassay procedures adhered to EPA protocol (Peltier and Weber **1985).**

Glen Raven began bioassay monitoring of its **effluent** in February of 1985. Concurrently, Glen Raven asked BRI to screen its chemical usage list so that compounds with known toxicities and minimal biodegradability could be eliminated/minimized in production processes. Chemical compounds for which **dyehouse** products were screened included alkyl phenol ethoxylates (APE), biocides, quaternary ammonium compounds and organic solvents. In addition to chemical use recommendations, BRI suggested means by which chemical products could be more accurately measured and dispensed during dyeing operations. Prior to this review, **dippers** and buckets were used to measure the **dyehouse** process chemicals. During this phase of the TIE (Tier I), personnel in the **dyehouse** began to use measuring cups and weighing devices to more accurately apportion the amounts of chemicals required in dyeing formulae. Despite the implementation of chemical compound optimization by July, 1985, effluent bioassay results continued to fluctuate well below the LC_{50} goal of **>90.0** percent (Figure **A4-1).**

During the chemical usage review period, BRI also studied WWTP operational practices and data (TRE, Tier II). Because of the regularity of **influent** overloads, it was suggested that Glen Raven consider additional equalization to supplement present capacity. In addition, it was suggested that Glen Raven consider the use of dyeing machines that would reduce liquor ratios from 30: **1** to less than 10: **1.** Such machines would help to minimize the volume of process wastewaters entering the WWTP.

Characterization and Fractionation

Because effluent toxicity levels did not improve after the Phase I chemical optimization step, and because the feasibility of increased equalization and **low-**liquor dyeing was undecided (Tier II), BRI undertook a Tier III TIE to further characterize Glen Raven's effluent. Due to **BRI's** familiarity with Glen Raven's textile operation and chemical use, initial wastestream analyses focused on effluent metal and surfactant measurements.

A 24-hour composite effluent sample was collected prior to chlorination beginning December **17, 1985** and used for chemical and toxicity characterization. In addition to BOD5 and COD determinations, metals and surfactant (MBAS and CTAS) determinations were conducted. Of particular interest in this characterization was the identification of unbiodegraded surfactant compounds in Glen Raven's effluent, particularly nonionics. To this end, a sublimation/extraction procedure, developed by the Soap and Detergent Association for use in biodegradation and environmental studies, was applied to an effluent aliquot. This method, as well as those for all NPDES analyses conducted during the TIE and TRE, is referenced in ***Standard Methods*** (APHA 1985).

Results of the December effluent characterization indicated that the sample was representative of that typically obtained for Glen Raven. Analyses showed that toxic concentrations of copper, nickel, and zinc (total and dissolved) were present. Furthermore, the CTAS (nonionic surfactant) concentration of 20.7 **mg/L** indicated that nonbiodegraded **nonionic** surfactants were a very likely source of the **effluent** toxicity indicated by the 48-hour ***D. pulex*** static acute LC_{50} value of 48.7 percent effluent. In addition, the 1.6 **mg/L** concentration of MBAS surfactant was considered high enough to be potentially toxic, pending identification of structural conformation. Table **A4-1** summarizes pertinent data from the December analyses along with U.S. EPA Criteria Document literature toxicity values for daphnids and expected **instream** waste concentrations during projected **7Q10** flow conditions.

Effluent metals could be directly linked to dyestuffs used in the hosiery dyeing process but it appeared unlikely that additional source reductions could be effected since chemical optimization had already been implemented. And to what extent metals were contributing to the effluent toxicity was unclear as metal determinations were conducted as 'total recoverable' (standard procedure for effluent metal

Table A4-1. Effluent Characterization, Glen Raven Mills TRE, Prechlorination Composite of December 17-18, 1985.

Test	Result (mg/L) Total (Dissolved)	Daphnid Toxicity Criteria (mg/L) Acute	Daphnid Toxicity Criteria (mg/L) Chronic	Effluent 7Q10 IWC at 0.8%
* Acute LC_{50}	48.7%		- -	
Copper	0.443 (0.447)	0.017	0.010	0.004
Nickel	0.110 (0.100)	1.102	0.015	0.001
Zinc	0.537 (0.480)	0.076	-	0.004
CTAS	20.7	5.360	>1.0 (a)	0.166
MBAS	1.6	19.870	>4.0 (b)	0.013

(a) Linear Alcohol Ethoxylate (LAE)
(b) Sodium Dodecylbenzenesulfonate (DDBSA) as MBAS
* Value is in percent effluent

analyses) rather than 'acid soluble,' the latter which is thought to be more indicative of a concentration which is toxic (U.S. EPA 1985).

As with other chemical compounds, surfactant usage had been optimized to eliminate those containing highly toxic and nonbiodegradable APEs. It was apparent from the December effluent characterization that the linear alcohol ethoxylate (LAE) compounds being used by Glen Raven were not being adequately treated to non-toxic levels.

Toxicity Reduction Approaches

In order to evaluate the contribution of metals and non-biodegraded surfactants to Glen Raven's effluent toxicity, BRI proposed a Tier V study which addressed metals removal and extended biotreatment as a means of reducing effluent toxicity. Both laboratory treatments were conducted on prechlorination composite effluent samples collected daily from January 14-18, 1986. Baseline measurements of acute toxicity (LC_{50} values), BOD, COD, metals, and CTAS surfactants were conducted on the December 14-15 composite, which was used for the metals reduction experiment and the initiation of the extended biological treatment experiment.

Metals Reduction Experiment

For this treatment experiment, an aliquot of untreated effluent was passed through a prepared column packed with a cationic exchange resin (Biorad AG50W-X4, 50-100 mesh, hydrogen form). Portions of treated effluent were then used for bioassay analyses and measurements of total recoverable metals. Results of pre- and post-treatment analyses indicated substantial reductions of copper (from 0.244 to 0.078 mg/L) and zinc (0.598 to 0.024 mg/L). The pre-treatment iron concentration of 1.061 mg/L was minimally reduced to 0.930 mg/L, while cadmium, chromium, lead and nickel concentrations were <0.05 mg/L in both pre- and post-treatment samples. A post-treatment LC_{50} value of 80.7 percent effluent reflected some improvement from the baseline LC_{50} value of 71.9 percent.

Extended Biological Treatment Experiment

For this treatment experiment, activated sludge from Glen Raven's WWTP was used to further treat aliquots of cornposited effluents. Prior to the actual renewal/treatment phase of the experiment, activated sludge was acclimated in BRI's temperature controlled laboratory, a period which included daily feeding with untreated wastewater from Glen Raven's treatment facility.

On Day 1 of the Treatability Study (January 15, 1986), background values for activated sludge parameters were measured on sludge culture supernatant, including total suspended solids, settleable solids and 48-hour static acute LC_{50} values (the latter determined on culture supernatant). In addition, a respiration rate was obtained for the sludge culture to check for an endogenous respiration level (5-20 mg/L/hr). Subsequent to this background check, a daily renewal of sludge supernatant was initiated at a 20 percent by volume rate over a 5-day period, beginning with the January 14-15 composite. A freshly cornposited effluent sample was used each day thereafter during the renewal period. After the fifth and final 20 percent renewal, at which point the total volume of sludge supernatant had been replenished with cornposited effluent, activated sludge treatment was extended for a period of 24 hours. At the end of this 24-hour period, aliquots of sludge supernatant were collected and metal, BOD5, COD, CTAS, and acute and mini-chronic (N.C. DNRCD 1987) static toxicity tests conducted.

Post-treatment metal determinations indicated that 0.287 mg/L copper, 0.065 mg/L chromium, 1.071 mg/L iron and 1.14 mg/L zinc were present. Of these, only zinc reflected a substantial increase over the pre-treatment concentration of 0.598 mg/L. Post-treatment values of 17.8 mg/L for BOD5, 231.2 mg/L for COD, and 0.85 mg/L for nonionic surfactants (CTAS) reflected substantial reductions from pre-treatment concentrations of 79.5, 500.2 and 10.4 mg/L for BOD5, COD and nonionics, respectively. The post- treatment 48-hour acute static LC_{50} value of >90.0 value also reflected reduction in toxicity from the baseline LC_{50} of 71.9 percent. Results of the mini-chronic *Ceriodaphnia* reproduction bioassay indicated that the treated effluent had no effect at Glen Raven's 7Q10 instream effluent concentration of 0.8 percent.

Conclusions: Toxicity Reduction Experiments

Based on preliminary BOD5, COD, metal and acute static LC_{50} values, the composite effluent samples of December 17-18 and January 14-15 were representative of effluent samples typically obtained from Glen Raven's Altamahaw facility.

Metal removal experiments on Glen Raven effluent showed that metals did not appear to be major contributors to effluent toxicity. Compared to published metal toxicity criteria, the December effluent metal concentrations of copper at 0.443 mg/L, nickel at 1.110 mg/L and zinc at 0.537 mg/L would appear to support the 48.7 percent static acute test LC_{50} value obtained for the composite. However, similarly toxic concentrations of copper and zinc (0.244 mg/L and 0.598 mg/L, respectively) were present in the January 15 composite and the LC_{50} value was considerably higher (71.9 percent). Likewise, toxic concentrations of copper (0.278 mg/L) and zinc (1.14 mg/L) were present in the treatability experiment supernatant which had a measured LC_{50} value of >90.0 percent. In explaining this discrepancy, it must be kept in mind that flame atomic absorption determinations represent metals in their free and complexed states. Textile process water such as Glen Raven's may contain metals that have complexed with chelating agents such as EDTA and, therefore, are not as toxic as metals in their free ionic state.

Unbiodegraded nonionic surfactants were present in Glen Raven effluent at concentrations reported as toxic to aquatic organisms. Because Glen Raven removed alkyl phenolic surfactants (such as NP-10) from the production process as a result of the Tier I chemical optimization, it was surmised that the nonionic surfactant concentrated from the effluent represented unbiodegraded linear alcohol ethoxylates (LAEs) which are known to be highly biodegradable and non-toxic when completely treated. A BRI in-house study, funded by the North Carolina DEM Pollution Prevention Pays Program, indicated that nonbiodegraded LAE is toxic to *Dccphnia pulex* at concentrations of 2.4 mg/L (Moore, et al. 1987). Infrared scans of surfactant residue from both the December 18 and January 15 composites confirmed that the LAEs present in the effluent were incompletely biodegraded, as evidenced by reduced terminal hydroxyl peaks at 3387 nm and reduced ethylene oxide peaks at 1220-1280 nm.

That the level of toxicity in Glen Raven's effluent could be reduced with extended biological treatment was indicated by the acute static LC_{50} value of >90.0 percent obtained with supernatant from the Biological Treatment experiment. In addition, results of the *Ceriodaphnia* mini-chronic bioassay indicated that effluent receiving extended biological treatment did not impair organism reproduction at the 0.8 percent 7Q1.O instream concentration.

Based on the findings of the laboratory Toxicity Reduction experiments, the following conclusions were made:

1. Glen Raven effluent can be rendered acutely non-toxic upon receiving adequate biological treatment.

2. Additional biological treatment will biodegrade surfactants and other organics to non-toxic levels and reduce COD loading on receiving stream waters.

3. Based on present WWTP design and the installation of two low-liquor dye machines, the maximum flow of wastewaters into the WWTP should be no greater than 20 percent of the treatment facility capacity. Alternatively, the WWTP could be expanded to allow for 20 percent more contact time with the activated sludge.

4. Though concentrations of total recoverable metals in the effluent exceed concentrations reported to be acutely toxic to aquatic organisms, present levels do not appear to be contributing significantly to effluent toxicity.

Based on findings of the TRE, the most logical and least expensive approach to toxicity reduction at the Glen Raven Mill was to increase process waste equalization to accommodate continual WWTP operation on a 24-hours per day, 7 days per week, 52 weeks per year schedule. Because the mill had no second and third shift or weekend operations, these periods could be used for waste treatment. Additional equalization would allow for a much slower addition of influent to the WWTP, thereby giving the facility the time necessary to adequately treat process wastes.

Implementation of Toxicity Reduction Recommendations

By August 1986, Glen Raven Mills had incorporated significant changes at its Altamahaw facility. First, low-liquor ratio dyeing machines were installed in its dyeing process, reducing by 50 percent water usage per pound of hosiery produced. Secondly, additional equalization was incorporated into the design of the WWTP, thus eliminating peak influent surges. These changes increased the retention time of process wastes in the activated sludge contact chamber from an average of 2.5 days to 4.5 days.

Follow-Up and Confirmation

Aquatic toxicity testing of Glen Raven's effluent continued on a monthly basis for the remainder of 1986. After several months of >90.0 percent LC_{50} values in early summer, attributed to a warm weather trend similar to that seen in 1985, Glen Raven's effluent consistently maintained its LC_{50} goal well into the colder winter months. Beginning in 1987, Glen Raven's permit was modified to a quarterly toxicity testing schedule and its effluent has continued to test non-toxic. As Figure A4-2 depicts, the maintenance of a toxic effluent status is closely correlated to the reduction in the average monthly WWTP effluent flow rate.

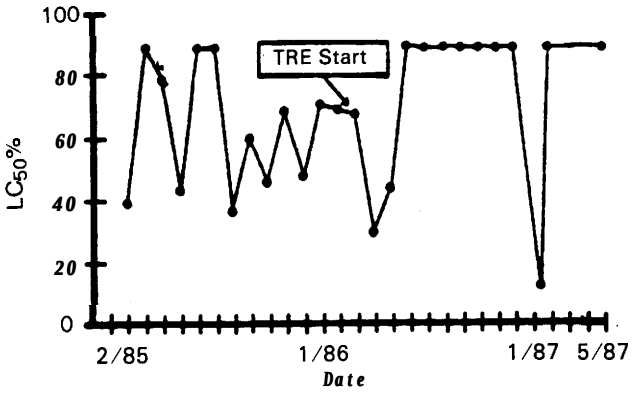

Figure A4-2a. Pre- and post- TRE 48-hour *D. pulex* acute static bioassay history, Glen Raven Mills.

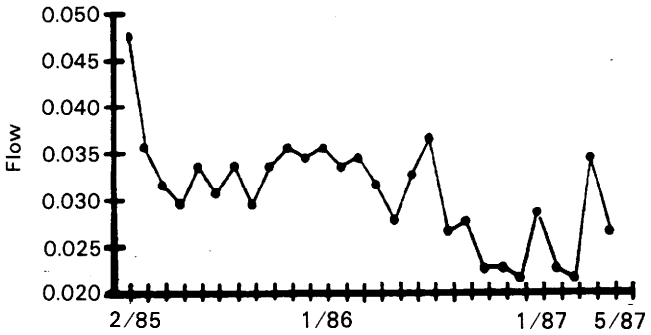

Figure A4-2b. Pre- and post- TRE monthly average effluent flow (MGD), Glen Raven Mills.

The incorporation of additional WWTP sludge contact time and the substitution of LAEs for APEs as process chemicals were both critical to the success of Glen Raven's TRE. Because of the literature reported evidence of APE toxicity and limited degradation, it is unlikely that Glen Raven would have realized its toxicity reduction goal with extended treatment alone. To date, Glen Raven has continued to use process-related detergents which are non-toxic when completely biodegraded. There is every indication that this practice in conjunction with expanded WWTP operations will ensure the continued discharge of process effluent with minimal toxic impact.

Problems Encountered

No specific hurdles were encountered during the TIE and TRE phases of the study. Paramount to the success of the project was Glen Raven Mills' willingness to investigate all aspects of the toxicity problem. Management acted quickly in assessing study findings and implemented changes in chemical optimization, process changes and WWTP modifications in timely manner.

References

APHA. *Standard Methods for the Examination of Water and Wastewater.* 16th Edition, American Public Health Association, Washington, DC (1985).

Moore, S. B., et al. "Aquatic Toxicities of Textile Surfactants." *Textile Chemist and Colorist* 19(5):29-32 (1987).

North Carolina Department of Natural Resources and Community Development, Division of Environmental Management, Water Quality Section. "North Carolina *Ceriodaphnia* Chronic Effluent Bioassay Procedure." North Carolina Department of Natural Resources of Community Development, Raleigh, NC (1987).

Peltier, W. H. and C. I. Weber. *Methods for Measuring the Acute Toxicity of Effluents to Freshwater and Marine Organisms. 3rd Edition,* EPA-600/4-85/013, Environmental Monitoring and Support Laboratory, U. S. Environmental Protection Agency, Cincinnati, OH., March 1985.

U.S. Environmental Protection Agency. *Ambient Water Quality Criteria for Copper - 1984.* EPA-440/5-84/027, Environmental Protection Agency, Criteria and Standards Division, Washington, DC., January 1985.

Section A-5

Case History: A North Carolina Metal Product Manufacturer

Introduction

Halstead Metal Products, located in Stokes County, NC, produces copper piping through an extrusion process. Halstead operates a 0.025 MGD activated sludge WWTP which has a monthly average effluent discharge of 0.0054 MGD. Incoming wastewater is primarily domestic in nature, with no actual contribution from industrial processes. Halstead's effluent is discharged into an unnamed tributary of the Dan River and has a 7Q10 IWC of 32.6 percent.

The North Carolina Division of Environmental Management (NCDEM) conducted 48-hour acute static *Daphnia pulex* bioassays on effluent samples in June 1985 and January 1986. LC_{50} values of 37, 28, 24 and 7 percent showed that effluent was toxic to the test organism and indicated that instream impact would be expected under 7Q10 design stream conditions. As a result of these preliminary bioassays, the NCDEM required Halstead Metal Products to begin a monthly program of 48-hour acute static bioassay monitoring of its effluent. Burlington Research, Inc. (BRI) began the monthly testing in March 1986 and LC_{50} values ranged from <5.0 - 11.9 percent through October 1986. At Halstead's request, BRI initiated a Toxicity Reduction Evaluation (TRE) the following month.

Initial Data and Information Acquisition

Process Description

Halstead melts copper scrap and cathodes to form billets (copper logs) which are then used for the extrusion of tubes and cold-drawing of pipes/tubing of various lengths and diameters. Monthly production of finished product averages 5 million pounds.

Wastewater Treatment Plant Description

Halstead operates a package activated sludge WWTP consisting of a 25,000 gallon aeration basin, 4,000 gallon clarifier and a 525 gallon chlorine contact chamber. Permitted discharge for the WWTP is 0.025 MGD but a 0.0058 MGD monthly average is produced.

Housekeeping

Prior to the initiation of the TRE, Halstead conducted a review of housekeeping practices. A possible contributing source of toxic copper flakes through floor drains was corrected by the installation of drain traps. Except for the introduction of copper dust via frequent hand washing by production personnel, no additional source of contamination was identified.

Characteristics of Influent and Eff luent

Halstead's NPDES permit requires both influent and effluent analyses on a variable daily/weekly/monthly schedule. A review of 16 months of NPDES data, summarized in Table A5-1, indicates substantial reductions of BOD_5, ammonia nitrogen and total suspended solids through the WWTP.

Table AS-I. Influent and Effluent Data Summary, Halstead Metal Products, August 1985 - November 1988

Parameter	Concentration (mg/L) Influent	Effluent	% Reduction
Flow (MGD)	-	0.0058	-
pH	7.51	6.48	
BOD_5	2179	96	
COD		66	
Oil and Grease		58	
Ammonia Nitrogen	6.8	0.8	89
Residual Chlorine, Total		0.6	
Solids, Total	581	422	28
Solids, Total Suspended	77	31	60

Chemical Usage Review

Except for two hand cleaning products, Halstead uses no chemical products in conjunction with its copper pipe production. It was noted that personnel involved in the manufacturing process washed their hands frequently to clean them of machinery oils and grease. Whether soap product use at Halstead was high enough to be contributing to the effluent toxicity was questioned in absence of aquatic toxicity

information for the cleaners. It is well documented that detergents/surfactants in their unbiodegraded state can be toxic to aquatic organisms at levels < 1.0 mg/L. Another concern regarding soap was its characteristic 'wetting' property and how it might be enhancing the toxicity of substances such as copper dust by acting as a mode for migration to the respiratory structures of toxicity test organisms.

On-site Visit

In late October 1986, an on-site tour of Halstead's production and WWTP facilities was conducted. A tour of the manufacturing facility did not highlight any disposal problems. Except for the frequent hand washing by employees, which contributes greases and copper into the waste lines, no contaminating point sources were identified that would account for the copper, grease, or other unidentified pollutants which could be responsible for the severe effluent toxicity. Operation of the WWTP appeared to be optimal though oil and grease surface film in the separator suggested an area that might require addressing. An accumulation of copper bits at the point of influent discharge to the activated sludge basin suggested the distinct likelihood of an accumulation of copper particles in the treatment basin, especially since the basin had not been completely cleaned out during the previous 6-7 years.

During the on-site visit, a preliminary check on water from Halstead's source wells indicated that incoming water had a pH of 6.27 and a very low background copper concentration. Furthermore, though copper piping was used throughout Halstead's facility when it was built, it was unlikely that any significant leaching from copper pipes was occurring at that pH level. A more thorough history of pH and total metal levels was recommended due to the rotating nature of pumping from the 5 wells which serve as the incoming water source for Halstead. It was also suggested that metal levels be monitored at various taps and fountains throughout the facility.

Toxicity Identification Evaluation (TIE)

Eff luent Toxicity

Logically, copper was suspected as the primary toxicant in Halstead's effluent. Therefore, when monthly bioassay monitoring was initiated in March 1986, total recoverable copper determinations were conducted on all effluent composites collected for bioassay testing. EPA guidelines (Peltier and Weber 1985) and Standard Methods (APHA 1985) were followed for all analyses.
During the eight month period of bioassay and copper monitoring prior to the TRE, 48-hour acute static *Duphnia pulex* LC_{50} determinations consistently ranged from < 5.0 - 11.9 percent and averaged 6.5 percent. Total recoverable copper concentrations for the same period ranged from 0.436 - 1.931 mg/L and averaged 0.566 mg/L. EPA criteria documentation indicates that copper is toxic to freshwater organisms at levels as low as 0.007 mg/L (U.S. EPA 1985).

Based on available NPDES data, copper was suspected as the primary cause of effluent toxicity in Halstead's discharge, with copper dust and filings from manufacturing processes entering the WWTP considered as the source. Oils and greases and detergents were suspected to be contributing to the overall effluent toxicity but confirmation through additional chemical testing was needed. Because of the domestic nature of the WWTP influent, other sources of toxicity were not suspected.

Characterization and Fractionation

A multi-phase approach was taken during this aspect of the Toxicity Identification Evaluation. Based on findings and suspicions of the Background Review, a 3-week Phase I study was designed to further characterize Halstead's wastestream. Objectives include:

1. The daily monitoring of the incoming water supply over a period of several weeks in order to identify any background metal contamination from well aquifers.

2. Because of questions regarding the contribution of detergents to the toxic nature of the effluent, a request for manufacturer's information on hand cleaners was made.

3. Monitoring of WWTP influent and effluent for a period of 3 weeks to establish incoming and outgoing levels of metals, surfactants, and oils and greases. Data would help establish:

   a. Whether or not effluent copper levels were due to accumulated solids in the treatment basin.

   b. The extent to which surfactants and oils and greases were components of the influent and how well they were being biotreated.

4. Determination of whether metals toxicity, primarily copper, was due to particulate or dissolved forms.

5. After the establishment of the above outlined database, a series of laboratory experiments would be designed for the removal of identified toxins from Halstead's effluent wastestream. Effluent samples would be checked for toxicity before and after laboratory treatments.

Beginning with the initiation of Phase I in November 1986, the water flea *Cerioduphnia dubia/affinis* was used for all 48-hour acute static bioassays; those required by the NCDEM as monthly tests as well as those conducted as part of Halstead's Toxicity Reduction Evaluation. It has been the practice of the NCDEM to implement a chronic static bioassay after a discharger meets its acute static LC_{50} goal. By utilizing *Cerioduphnia* for all future acute static bioassay testing, differences in species sensitivity to toxicants could be avoided as the chronic static bioassay is incorporated as an effluent monitoring tool.

In summary, Phase I influent and effluent *Ceriodctphnia* 4&-hour acute static bioassay data indicated consistent levels of toxicity at both wastestream point sources during the 3 weeks of testing. Chemical data indicated:

1. Total copper effluent levels were high enough to account for the mortality observed in acute static bioassays.

2. Effluent zinc levels were high enough to be contributing to effluent toxicity.

3. Solids in the aeration basin were contributing to effluent copper and zinc levels.

4. Copper levels in water from Well #& were high enough to be acutely toxic.

5. Influent levels of surfactants, oils and greases, and other organics measured as COD, were adequately treated so that effluent concentrations were not considered significant contributors of toxicity.

Based on results of the Phase I study, a Toxicity Reduction method evaluation was initiated in February 1987. The primary goal was the experimental reduction/removal of effluent copper to non-toxic levels through laboratory-scale application of industrial metal reduction technologies. Success of metal reduction treatments was gauged by the extent to which treated effluent samples met the 48-hour acute static LC_{50} goal of 90 percent or better. Another goal of this work was the confirmation and further identification of effluent toxicants through the application of the newly drafted EPA Toxicity Characterization bioassays (Mount and Anderson-Carnahan 1988).

Three metal reduction experiments were conducted, with the design of Experiments 2 and 3 based on results of the previous experiment. Experiment 1 consisted of metal reduction through application of lime, 50 percent liquid caustic, two cationic polymers, and combinations thereof. Experiment 2 expanded on Experiment 1 which indicated that lime-treated effluent aliquots had the greatest copper reduction. Lime addition also represented the least expensive and easiest of the metal reduction treatments with post-treatment bioassays. Each experiment was conducted during consecutive months so that data from regular monthly bioassay and copper determinations (zinc measurements were added in May 1987) could be applied as Experiment pretreatment baseline data.

Metal and Toxicity Reduction Experiments

Data from Experiment 1 indicated that the best reduction of effluent total copper was obtained by the addition of lime to a pH level of 12.0, resulting in a treated effluent copper concentration of 0.05 mg/L. In Experiment 2, post-treatment total recoverable copper levels of 0.04 mg/L for the pH 12 treatment and 0.14 mg/L for the pH 11 treatment were measured and in Experiment 3, concentrations of 0.12 and 0.04 mg/L measured for pH treatments 10 and 12, respectively. These values closely approached reported 48-hour acute static copper LC_{50} values of 0.017 mg/L for *Ceriodaphnia* and 0.053 mg/L for *Daphnia pulex* (U.S. EPA 1985). When compared to aquatic toxicity literature values, the lowest of the Experiment 1 and 2 post-treatment copper levels equaled or surpassed reported LC_{50} concentrations. Results of Experiment 3 post-treatment toxicity tests indicated, however, that effluent values of > 90.0 percent could be obtained despite post-treatment total copper levels of 0.04 and 0.12 mg/L. (Post-neutralization sulfate concentrations of 73.0 and 289.0 mg/L after pH adjustment were much lower than the 48-hour acute static LC_{50} concentration of 1,637.6 mg/L obtained for *D. pulex* during BRI in-house studies.) This apparent contradiction brings to focus two points regarding the contribution of copper (as well as zinc and other low-level metals) to Halstead's effluent toxicity.

First, it is not clearly understood what portion of an effluent metal concentration is biologically available to an aquatic organism and consequently capable of producing toxic affects. It is apparent from the results of Experiment 3 that not all of the copper present in the treated effluent samples was bioavailable because literature-cited toxic concentrations were measured in effluent which passed the acute static test. Further confirmation of this phenomenon is evidenced by the bioassay conducted on the March 25 effluent composite. An LC_{50} of > 90.0 percent was obtained on effluent with total recoverable copper concentration of 0.57 mg/L. Recently drafted EPA Toxicity Characterization procedures assisted in answering the question regarding bioavailability of toxicants such as metals to aquatic organisms. (Results of Characterization toxicity tests conducted on Halstead's effluent are discussed below.) Another factor hindering accurate correlation of metal levels and toxicity is the methodology by which metal

concentrations are routinely measured. NPDES permitees are required to measure effluent metals as 'total recoverable' concentrations, the same method applied by BRI during Halstead's TRE. In its most recent criteria documentation, the EPA suggests that effluent metals measured as 'acid soluble' concentrations provide a better indication of the amount of a metal which is potentially toxic to aquatic organisms (U.S. EPA 1985).

BRI conducted both 'total recoverable' and 'acid soluble' copper and zinc determinations on Halstead's June 1987 effluent composite to see if there was a measurable difference between detection methods. Data indicated little difference in copper concentrations between methods, with values of 0.85 mg/L 'total recoverable' copper and 0.89 mg/L 'acid soluble' copper measured. Zinc levels, on the other hand, were substantially different, with 0.246 mg/L 'total recoverable' versus 0.169 mg/L 'acid soluble' concentrations measured. As with any experimental procedure, a single set of data is inadequate for drawing firm conclusions but this single comparison of metal determination of methodology suggested differences in effluent metal bioavailability.

The North Carolina freshwater standards for copper and zinc are 0.015 and 0.050 mg/L, respectively. Based on measurements of copper in lime-treated effluents from laboratory and field samples, the 0.015 mg/L standard would not be met under 7Q10 conditions even though acute static LC_{50} values of >90.0 percent were measured. These metal standards are considered Action Levels, however, and can be waived if it is demonstrated that instream levels are not toxic to aquatic life.

Field Application of Laboratory Procedures

The use of lime as a means by which metal levels can be lowered with a subsequent reduction in effluent toxicity was demonstrated in the laboratory. An application of the same chemical technique was demonstrated in March 1987 during a routine WWTP operation. On March 6,100 pounds of lime was added to the WWTP aeration basin and clarifier, and on March 11 solids were pumped from the basin. Another 50 pounds was added to the aeration basin and clarifier on March 12. At month's end, the 24-hour composite effluent sample collected for Halstead's monthly acute bioassay had an LC_{50} of >90.0 percent (Figure A5-1a). The following month, an LC_{50} value of 73.4 percent was obtained for effluent collected over a 24-hour period beginning April 7. These dramatic reductions in effluent toxicity were obtained despite effluent total recoverable copper concentrations of 0.57 and 0.16 mg/L (Figure A5-1b).

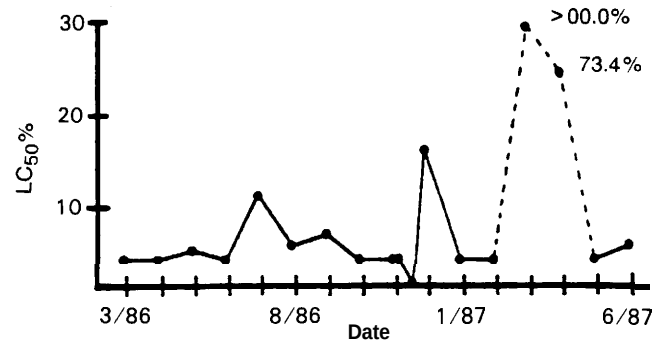

Figure AS-1 a. 48-hour daphnid acute static bioassay history, Halstead Metal Products.

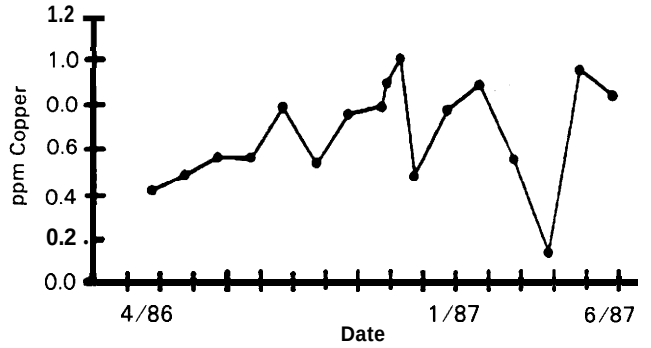

Figure AS-1 b. Total recoverable copper concentrations, corresponding composite effluents.

Toxicity Characterization Procedures

Results of timed-lethality procedures confirmed the contribution of metals and an oxidant to Halstead's effluent toxicity. ET_{50} values of <48.0 hours obtained during the chelation procedure indicate that metals in the effluent complexed with EDTA to form non-toxic compounds that were not biologically available to test organisms. ET_{50} values during the air-stripping and solid phase extraction procedures (Mount and Anderson-Carnahan 1988) for treatments basified by the addition of sodium hydroxide also showed significant reductions in toxicity. The addition of sodium hydroxide to pHs of 11 and 9 during the air-stripping and solid phase extraction procedures, respectively, undoubtedly caused the formation of copper hydroxide salts which were not available to the *Ceriodaphnia*. ET_{50}s of 23.7 and 19.8 hours obtained during the oxidation/reduction procedure (Mount and Anderson-Carnahan 1988) indicated that an oxidizing agent was a significant contributor to the toxicity of the tested effluent. The minimal chemical usage at Halstead pointed to chlorine as the likely oxidant. Effluent chemistry data indicated that 0.32 mg/L

residual chlorine was present in wastewater used in the Characterization tests, a concentration several times greater than the reported 48-hour acute static LC_{50} of 0.028 mg/L and a chronic concentration of 0.007 mg/L for *D.magna* (5).

Beginning in February 1987, the NCDEM required that effluent samples for aquatic bioassay testing be collected after points of chlorination and that dechlorination not be conducted prior to toxicity test set-ups. Effluent residual chlorine levels since the change in collection points have been high enough to account for mortalities in acute static toxicity tests. It should be noted that effluent LC_{50}s were similarly low when composites were collected prior to chlorination; that is, before February 1987 (Figure A5-1a). Similarly, WWTP influent was identified to be equally toxic during the Phase I study.

Receiving Stream Effluent Concentrations

Based on effluent values for the current year, projected 7Q10 concentrations of total recoverable copper and residual chlorine in Halstead's effluent surpass toxicity limits reported in the scientific literature. Though it has been demonstrated that reported copper criteria limits do not necessarily correlate with LC_{50} and copper values obtained in this TRE, literature values can serve as valuable guidelines in the removal/reduction of effluent contaminants.

Conclusions and Recommendations for Toxicity Reduction

Data collected during Halstead's Toxicity Reduction Evaluation confirmed copper as the primary compound responsible for effluent toxicity, and zinc and chlorine as secondary contributors. Results of acute static toxicity tests and Toxicity Characterization procedures indicated that effluent toxicity was reduced when these compounds were complexed or removed through chemical treatment. Furthermore, data indicated that the LC_{50} goal of 90.0 percent or better could be met even though effluent total recoverable copper and residual chlorine concentrations exceeded aquatic toxicity criteria. The following recommendations were submitted to Halstead for consideration:

1. More frequent solids wasting in the WWTP aeration basin should be practiced.

2. Halstead's WWTP should be modified to incorporate a metal reduction treatment system. The use of industrial grade lime appears to be a practical and inexpensive approach.

3. Effluent residual chlorine levels should be reduced below current levels either by additional aeration, cascading or chemical treatment.

It was BRI's opinion that minor engineering modifications to Halstead's present WWTP facility would accomplish the effluent metal and chlorine reduction needed to produce a wastestream that is neither acutely nor chronically toxic to receiving stream organisms.

Follow-Up and Confirmation

Halstead Metal Products is presently conferring with a civil and environmental engineering firm to address TRE study findings and recommendations.

References

APHA. *Standard Methods for the Examination of Water and Wastewater. 16th Edition,* American Public Health Association, Washington, DC (1985).

Mount, D. I. and L. Anderson-Carnahan." Methods for Toxicity Reduction Evaluations: Phase I - Toxicity Characterization Procedures." Second Draft June 1988.

Peltier, W. H. and C. I. Weber. *Methods for Measuring the Acute Toxicity of Effluents' to Freshwater and Marine Organisms. 3rd Edition,* EPA-600/4-87/013, Environmental Monitoring and Support Laboratory, U. S. Environmental Protection Agency, Cincinnati, OH., March 1985.

U S. Environmental Protection Agency. *Ambient Water Quality Criteria for Copper - 1984.* EPA-440/5-84/027, Environmental Protection Agency, Criteria and Standards Division, Washington, DC, January 1985.

Section A-6

Case *History: Texas* Instruments Facility *in Attleboro, Massachusetts*

Introduction

In 1982, when Texas Instruments' (TI) Attleboro, Massachusetts facility submitted a renewal application for its National Pollutant Discharge Elimination System (NPDES) permit, water quality criteria were used to determine permit limits. The draft NPDES permit, issued to TI in 1984, reflected these water quality-based permit limits.

The Attleboro facility was unable to meet the new limits with existing technology. After much deliberation, TI chose to conduct a toxicity reduction evaluation (TRE) using aquatic toxicity testing to determine source of toxicity, and identify a means to reduce the source. The following sections document the work of the TRE. The TRE identified insoluble sulfide precipitation as the method for treatment of TI's effluents to achieve acceptable levels of aquatic toxicity in the facilities' surface water outfall.

Initial Data and Information Acquisition

Initially, Springborn Bionomics Inc., a consultant to TI, inspected the wastestreams and identified six sampling sites for acute toxicity studies to evaluate the effect of TI's direct discharges to surface receiving waters (Figure A6-1). There were three ouffalls (003, 004, 005) which carried process water flows from TI to Coopers Pond via a brook. After examining the effluent from these outfalls, it was apparent that the major contribution to toxicity in the receiving stream was outfall 003. Most of the work focused on outfall 003 because the runoff from the metal finishing processes were discharged into outfall 003. The other outfalls received boiler blowdown, storm water runoff, which had nothing to do with the product. Dissolved metals appeared to be the major cause of the observed toxicity. Table A6-1 summarizes toxicity results from the various sampling locations.

Studies conducted at outfall 003 indicated that the seven consecutive day flow with a recurrence interval of 10 years (7Q10) was approximately 0.15 cubic feet per second (cfs) or 0.0042 cubic meters per second (cms) while the thirty-day average flow with a recurrence interval of 2 years (30Q2) was estimated to be .45 cfs or 0.013 cms. EPA Region I required these historic low flows to be used in conjunction with the sensitive species criteria to assess the impacts of discharges on surface waters.

TI's process and cooling water flows were estimated to contribute 93 percent of the stream flow during acute toxicity conditions (periods of 7Q10 flow and maximum plant flow) and 73 percent of the total flow during chronic toxicity conditions (periods of 30Q2 flow and average plant flow).

Toxicity Identification Evaluation (TIE)

Eff luent Toxicity

Two studies conducted on *Daphnia pulex* by Springborn Bionomics Inc. indicated that the process water discharge from 003 exhibited No Observed Acute Effect Levels (NOAEL) of 5.6 and 14 percent effluent. Similar studies conducted on fathead minnows yielded NOAELs of 56 and 100 percent effluent. These results indicated that *D. pulex* was the most sensitive species and that based upon this species, effluent from 003 was toxic and subject to reduction.

Because the final effluent exhibited high acute toxicity to *D. pulex* TI decided to conduct a second round of toxicity testing using acute toxicity testing and instream evaluation with *D. pulex* and chronic toxicity testing with ceriodaphnia affinis/dubia. *D. pulex* was the test species of choice because it exhibited a greater degree of sensitivity in the first round of testing. The second round of testing confirmed the acute toxicity in the effluent from outfall 003.

Characterization of the Eff luent

Enviro-Systems, another TI consultant, and TI's MAPA Lab carried out similar analysis of the effluent based on EPA's guidelines. Metals were suspected to be a cause of toxicity in the effluent, and a correlation between metals and toxicity was established. Analyses for metals were conducted using Atomic Absorption Spectrometry and Spectrophotometry, and using inductivity coupled

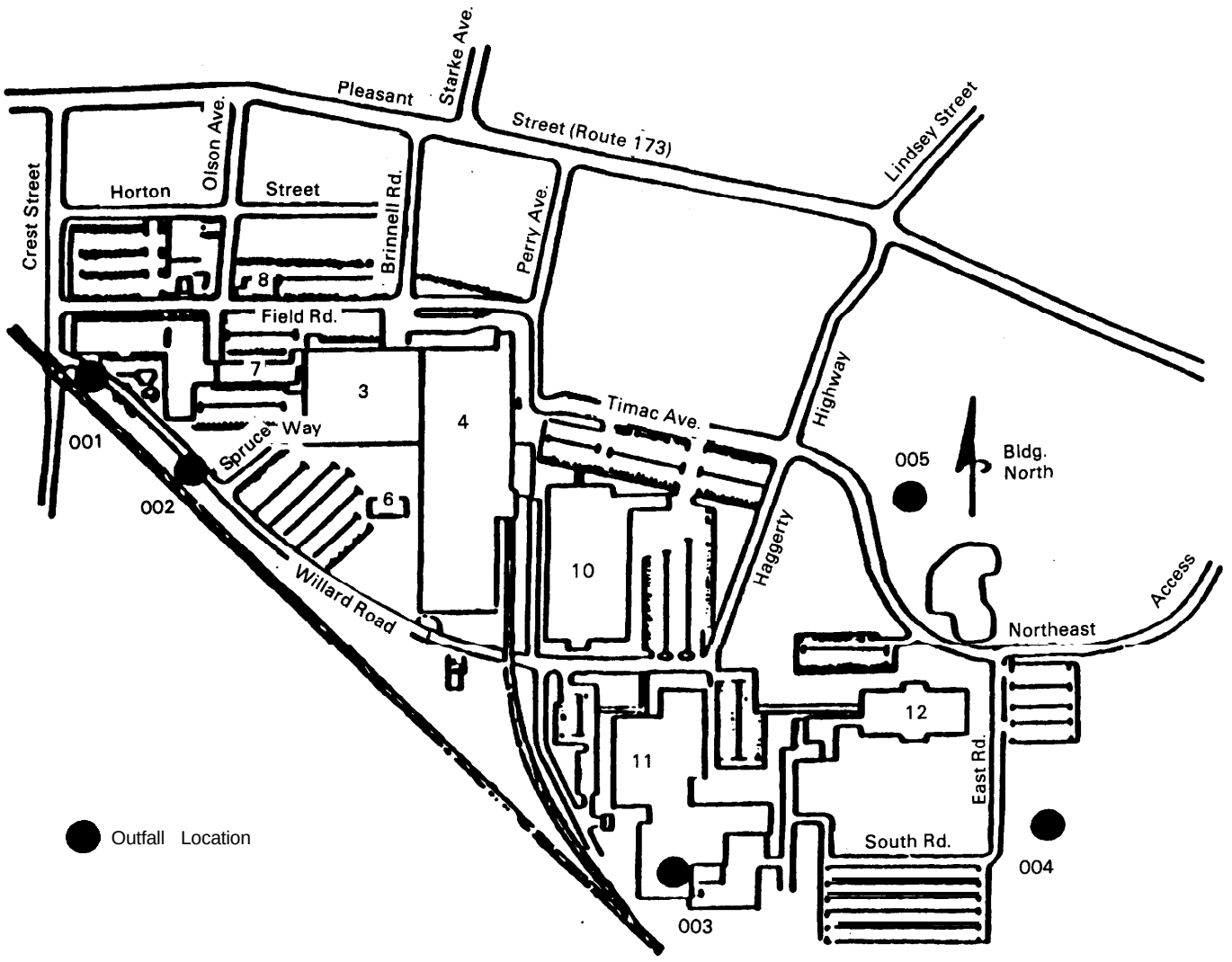

Figure A6-1. Texas Instruments Attleboro outfall locations.

Table A6-1. Range of *Daphnia pulex* LC50's and NOAEL*

Sample Location	Range of LC50's (% Effluent)	Range of NOAEL (% Effluent)
a. Outfall 003	0.1-2.5	0.1-l
b. Outfall 005	35	25
c. Cooling Tower Blowdown	41	1
d. Unnamed Brood down-stream of outfall 003 and 004 discharge	1.69-5	1.1-1
e. Coopers Pond Influent	1.91	1
f. Coopers Pond Outfall under railroad embankment	1.55-l 00	1 .o-100

* Table taken from Veale and Elliot (1987)

plasma spectrometry. The team correlated the concentration of various parameters to acute LC_{50}, acute NOAEL, and chronic NOAEL. In order to illustrate this correlation, acute bioassays were conducted using *D. pulex* and chronic bioassays were conducted using C. *affinisldubia* under stable laboratory conditions. Five sets of effluent samples were analyzed to determine acute LC_{50}, acute NOAEL and chronic NOAEL and the corresponding metal concentrations in each of the five sets were determined. Results from these tests are summarized in Table A6-2.

The 48 hr. LC_{50} values for *D. pulex* ranged from 73.29 percent to 100 percent, while acute NOAELs ranged from 50 percent to 100 percent. The results of the chronic toxicity studies revealed no effect from the effluent on production of neonates by adult *Ceriodaphnia* (which survive the test), at

Table A6-2. Summary of Results From Representative Acute and Chronic Effluent Toxicity Tests, Texas Instruments Toxicity Reduction Evaluation, August 1985

Parameter	Test Series I	II	III	IV	V
Acute LC50**	100%	73.29%	100%	100%	100%
Acute NOAEL**	100%	60%	50%	100%	100%
Chronic NOAEL***	12.5%	6.25%	20%	60%	80%
Hardness (mg/L)	76	0	48	51	66
Alkalinity (mg/L)	81	73	56	71	74
Ammonia (mg/L)	0.01	0.02	0.01	0.7	0.9
Residual Cl (mg/L)	0	0	0	0	0
pH (S.U.)	7.66	11.12	7.80	7.94	7.70
Ag (mg/L)	0.005	0.068	0.025	0.0008	0.0005
Al (mg/L)	0.52	0.12	0.52	0.71	0.32
Cd (mg/L)	0.004	0.006	0.006	0.002	0.008
Cr (total) (mg/L)	0.0005	0.020	0.035	0.0005	0.0005
Cu (mg/L)	0.009	0.046	0.041	0.014	0.005
Fe (mg/L)	0.064	0.098	0.23	0.29	0.055
Ni (mg/L)	0.12	0.25	0.20	0.12	0.09
Pb (mg/L)	0.001	0.001	0.043	0.002	0.023
Se (mg/L)	.01	0.01	0.01	0.01	0.01
Sn (mg/L)	0.01	0.01	0.045	0.01	0.01
Zn (mg/L)	0.008	0.013	0.028	0.004	0.005
Cr (+6) (mg/L)	0.0005	0.020	0.035	0.0005	0.0005
CN (mg/L)	0.06	0.07	0.21	0.09	0.06
F (mg/L)	4.7	5.4	1.8	1.1	1.1
P (mg/L)	0.69	1.2	1.8	1.1	0.48
Pd (mg/L)	0.005	0.005	0.005	0.005	0.005
B (mg/L)	0.6	0.58	0.5	0.5	0.27

* Table taken from Veale and Elliot (1987)
** Acute test species was *Daphnia pulex*
*** Chronic test species was *Ceriodaphnia affinis/dubia*

concentrations from 6.25 to 80 percent effluent. No direct correlation between any single compound and effluent toxicity could be found. However, when silver, copper and lead levels were simultaneously low, there was a correlating reduction in toxicity even when the levels of other metals were high.

Toxicity Reduction Approaches

To reach the goal of no toxic materials in toxic amounts, TI elected to evaluate advanced treatment technologies to determine if acceptable effluent quality could be attained. Selected state-of-the-art technologies which were tested included the following:

- Insoluble (iron) sulfide precipitation process.
- Membrane microfiltration.
- Chelating resin ion exchange.
- Soluble (sodium) sulfide precipitation and filtration.

The treatment evaluation program required several months of data collection, from June through October, 1985. As noted previously, effluent samples from each pilot unit were subjected to toxicity testing, in addition to analyses, for the constituents listed in

the new discharge permit. This in-depth testing, data collection and data analyses eventually determined:

- The feasibility of advanced treatment to produce an effluent meeting the TRE objective.
- Estimations of full-scale chemical consumption rates and chemical costs.
- Operational and maintenance advantages and disadvantages of each process.
- Process turndown capabilities and operational flexibility.
- Full-scale design parameters.

For this specific project, the pilot testing favored the selection of the insoluble sulfide precipitation process for advanced treatment and polishing of the effluent from TI's existing hydroxide precipitation treatment system.

Pilot Testing

In order to establish baseline toxicity, design and operating data for the advanced treatment processes required to meet TI's new permit limits, a comprehensive pilot testing program was developed. During this pilot testing program, a series of acute and chronic toxicity tests were conducted using treated effluent from the pilot units.

Conclusions, Comments, and Recommendations

In May 1985, TI contracted with United Engineers and Constructors Inc. (UE&C) of Boston for the design upgrade of the existing industrial wastewater treatment system for their Attleboro facility. Improvements to the existing wastewater treatment system were to include advanced treatment technologies.

UE&C developed a cost-effective application of an Insoluble Sulfide Precipitation Process during the pilot studies. This method was successful in meeting the discharge limits and the toxicity requirements in the NPDES permit. This new unit has not yet been put into normal operation at the TI plant.

References

Bazza, R.V., C.M. Kelleeher, and M. B. Yeligar. "Metal and Finishing Wastewater Treatment Upgrade with Insoluble Sulfide Precipitation Process," Paper presented at Eighth Conference Pollution Control for the Metal Finishing Industry, San Diego, CA, Feb. 9-l 1, 1987.

Veale, F.I., and M. J. Elliot. "Meeting the Water Quality Criteria for the Metal Finishing Industries." Environmental *Progress,* 6(2), May 1987.

Section A-7
Case History: Chemical Plant I

Introduction

This case study presents information and data gathered during a toxicity reduction evaluation conducted in 1985 and 1986. The facility under study is located in an eastern coastal state with discharge to the Atlantic Ocean. The investigation was performed by AWARE Incorporated. A permit effective July 1, 1985 required the plant to conduct toxicity tests on ***Mysidopsis bahia,*** a saltwater shrimp, to comply with a 96 hr LC_{50} value > 50 percent effluent toxicity limit. This permit requirement was to be attained in no more than three years from the effective date of the permit, with interim improvement levels specified as well. The permit also required that the TRE identify technologies capable of attaining the interim and final toxicity limits within one year (July 1986). Quarterly reports on the technological progress to reduce toxicity were also required.

Initial Data and Information Acquisition

Products manufactured at the facility included organic dyes and intermediates, epoxy resins, and fine chemicals used for textile, paper and plastic industries. Figures A7-1 shows a process flow diagram for the waste treatment system. As of June 1985, the biologically treated wastewater at the plant was highly toxic to ***M. bahia*** (LC_{50} = *5* percent).

Toxicity Identification Evaluation (TIE)

Toxicity Screening

Ammonia

Ammonia was suspected as a causative agent due to levels of 20 to 30 mg/L in the treated effluent. Ammonia stripping was tested to determine if ammonia could be the major cause of the toxicity.

Biodegradability

Extended aeration biodegradation testing was performed with a seven day retention time following activated sludge treatment. A non-biodegradable fraction of 70 mg/L remained and no significant reduction in toxicity was observed. However, this method succeeded in removing the chloro-compounds revealed during the GC/MS analysis.

Priority Pollutants

Methylene chloride and methyl isobutylketone were used in extraction tests to determine whether organic priority pollutants in the effluent were causing the toxicity. Both tests failed to achieve the objective of eliminating toxicity.

Metals

In order to determine the role metals were playing in the effluent toxicity, precipitation/filtration tests were performed using sulfide, hydroxide, and alum. Metals removal resulted in insignificant toxicity reduction.

Non-biodegradable/non-polar Organics

In order to determine the significance of non-biodegradable, non-polar organics, the biologically treated effluent was exposed to further, complete biological treatment followed by contacting with pulverized activated carbon. This resulted in nearly complete removal of TOC and toxicity.

GC/MS Analysis

GC/MS analysis revealed that benzanthracene, a large multiple-ring aromatic compound was the most probable potential toxicant. However, there was no known source of the compound within the plant. This compound was detected in the final effluent sample which had the lowest LC_{50} value. Other potentially toxic compounds which were occasionally detected included chloroform, tetrachloroethylene, 1,1,1-trichloroethane, napthalene, dibutylphthalate and azo compounds. However, all of these compounds were found in both non-toxic and toxic samples in similar concentrations.

Toxicity Characterization and Source *Identification*

A preliminary screening program investigated sources of toxicity from seven areas in the plant.

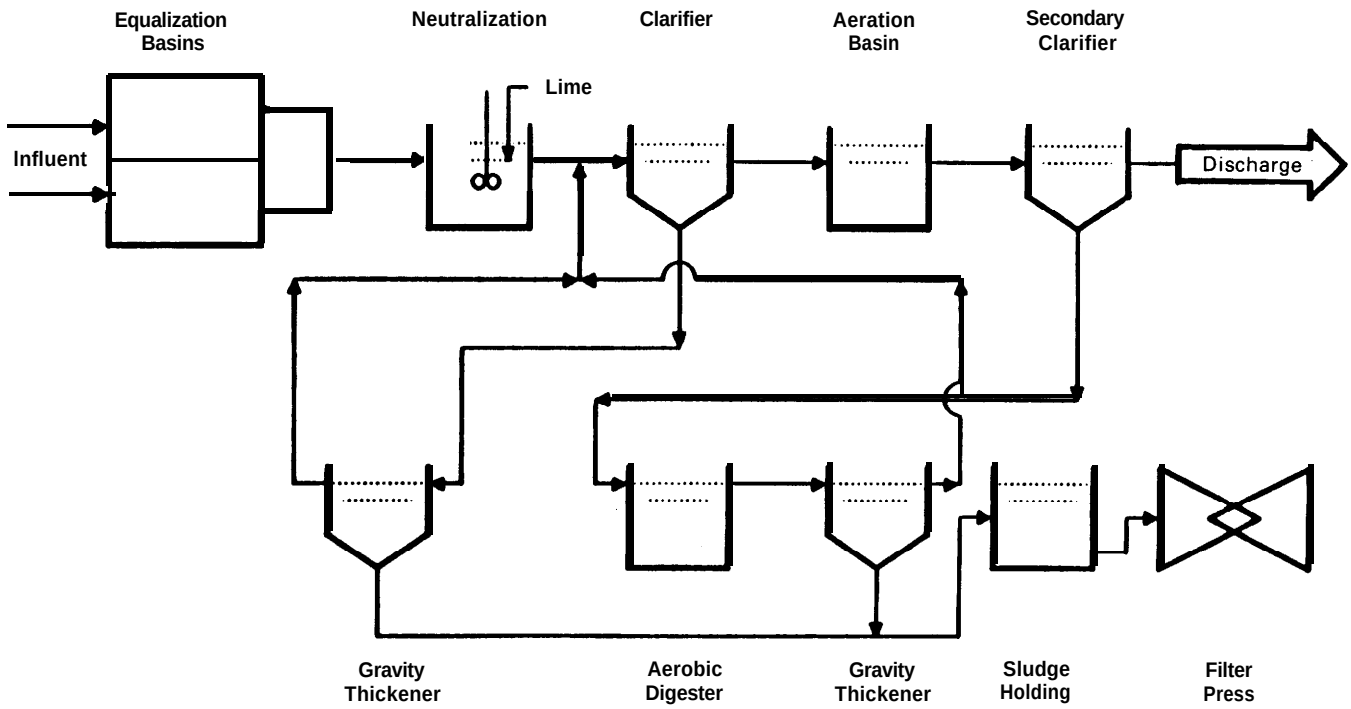

Figure A7-1. Waste treatment plant process flow diagram.

Relative toxicity of suspected organic and inorganic compounds were determined and an initial data base on end-of-pipe toxicity reduction was developed. Samples of the effluents from each of the seven production units were collected and analyzed before and after passing through the existing treatment system in order to determine the relative toxicity of suspected organic and inorganic compounds. Based on 48 hour LC_{50} tests, it was observed that the effluent from every production unit was toxic because the sample failed to produce an LC_{50} value $\geq$ 50 percent for the effluent when diluted to the level found in the discharge.

Source Classification

Studies were begun to classify and identify wastewaters which proved toxic to M. *bahia.* This study was aimed at identifying those wastestreams which had the highest probability of causing toxicity to M. *bahia,* after passing through the biological treatment. The rate of biodegradation and biotoxicity (to M. *bahia*) for each wastestream was determined using the Fed Batch Reactor test method (Watkin 1986).

Classification of the wastestreams was done in terms of relative biodegradation rates and potential for causing toxicity to *M. buhiu.* Based upon the evaluation, wastestreams were placed into one of four separate wastestream classes, as described below.

Class A wastestreams are toxic and non-biodegradable. These may require treatment at the source to reduce toxicity. Class B wastestreams are toxic and biodegradable, and can normally be treated with conventional treatment processes. Class C wastestreams are non-toxic, but may contribute to final effluent toxicity through synergism and inplant reaction. Class D wastestreams are non-toxic and are unlikely to contribute to toxicity in the final wastestream.

Table A7-1 summarizes typical classification results from the grading of the wastestreams for selected wastestreams.

In total, 126 wastestreams were classified, of which 14 wastestreams fell in Category Class A, 24 wastestreams fell in Category Class B, 29 wastestreams fell in Category Class C, while 54 wastestreams were classified as Class D. Based upon those results, source reduction or treatment projects were defined for Class A and B streams (Table A7-2). The results of these projects are summarized in a later section.

Table A7-1. Typical Classification Results of Wastewater Sources

	Biological Treatability Q Max (mg TOC/gm-hr)	Bioassay Toxicity 48 hr LC_{50}[a] (TOC, mg/L)	Maximum Plant Loading[b] (TOC, mg/L)
Class A Wastestreams (nondegradable with suspected toxicity)			
A	<1	<8	1
B	<1	0.5	0.4
C	<1	16	5.5
D	<1	2.4	1.7
Class B Wastestreams (biodegradable with suspected toxicity)			
E	22.4	16	4
F	30.0	14	8
G	7.9	26	10
H	5.5	7.2	3.1
Class C Wastestreams (unlikely to induce toxicity)			
I	26.5	104	14
J	5.3	319	36
K	5.4	111	11.7
	14.1	375	56

[a] *Mysidopsis bahia*
[b] Contribution of the source to the combined effluent expressed in mg source TOC per liter combined effluent.

Source of Toxicity

A distinct relationship existed between the total organic carbon (TOC) and toxicity before and after biological and carbon treatment. However, no correlation was detected between the influent TOC and the effluent toxicity level. Data strongly indicated that non-biodegradable organic material was the source of toxicity in the effluent.

Toxicity Reduction Approaches

Source Reduction

This program was aimed at eliminating or reducing the discharge of raw materials, metals, inorganic and organic compounds. Waste profiles were established for each of the production units. This included process water description sheets and material balance sheets accounting for approximately 90 percent of production volume. This proved to be an excellent tool for wasteload reduction and process improvement. The discharge of certain toxic materials was reduced, if not eliminated, with the aid of process modification. In addition, the following treatment technologies were examined.

Metal Precipitation

Metal concentrations were significantly lowered in some wastestreams by carrying out metal precipitation at the source.

Reverse Osmosis

This technology proved to be partially effective in reducing toxicity and TOC in waste liquor discharged

Table A7-2. Treatability and Toxicity Factors from Identified Wastestreams

Production Units	Beodegradabiiity	Organic Removal	BOD Removal	Responsible Toxicants
A	Negligible	Low	Negligible	—
B	High	Low	Moderate	Organic Compounds
C	Negligible	High	Moderate	Copper and Chromium
D	Very High	High	High	-----
E	High	Very High	High	—
F	High	Very High	High	Copper
G	Very High	Very High	High	-----

from some production units. However, there were several drawbacks associated with reverse osmosis technology. Some of the problems included disposal of the concentrate, limitation of available membranes and formation of a heavy, tarry material due to caustic soda addition during neutralization.

Peroxide Treatment

This method gave mixed results. Although it needs to be studied further, no attempt to investigate this technology was made until November 1986.

Carbon Adsorption

Based on the identification of Class A streams in the classification system described previously, carbon pretreatment tests on Class A wastestreams were completed by September 1985. Activated carbon (adsorption) dosages as high as *200,000* mg/L were required to reduce TOC to acceptable levels. The carbon dosage required to obtain an LC_{50} value of 50 percent or greater effluent in a batch reactor ranged from 10,000 to 50,000 mg/L. Investigations were performed on **12** Class A streams and significant reduction in effluent toxicity by carbon contact was observed.

Wet *Air Oxidation*

Wet air oxidation also was examined. Significant reductions in toxicity improved biodegradability and a 98 percent TOC removal were observed in some waste streams. A *40* fold improvement in biodegradability was observed in some cases.

Powdered Activated Carbon Treatment (PACT)

Based on bench, pilot and full scale end-of-pipe treatment studies, it was determined that the PACT technology was a technically and economically feasible alternative. A carbon dosage of 100 mg/L was required (in the bench-scale units) to consistently meet an interim toxicity requirement (LC_{50} value $\geq$ 20 percent effluent) while a dosage of 250 mg/L was necessary to comply with the final toxicity requirement (LC_{50} value $\geq$ 50 percent effluent). Bench scale results also indicated that a carbon dosage of up to 500 mg/L may be required under certain extreme influent conditions.

Winter conditions did not significantly affect toxicity reduction performance, but did decrease the organic removal efficiency.

The effect of hydraulic retention time (HRT) did not seem to impact treatment performance significantly. The system was operated at HRT's of 2.1 days and 1.1 days during optimization studies to evaluate the effect of operating only one of the two existing aeration basins.

The investigation demonstrated the success of flocculent addition to remove color, and the success of PAC addition to remove metals, chromium in particular.

The toxicity reduction potential of the system seemed to be impaired when operated at solids retention times of **15** days or less. Solids retention times (SRT) of between 30 days and 50 days achieved optimum toxicity reduction. Operating the system at an SRT outside this range was found to increase effluent toxicity. Addition of ferrous ion to the activated sludge reactor was not found to reduce toxicity. Regeneration of powdered activated carbon was not found to be attractive due to loss of adsorptive capacity and loss of carbon in the process. For equivalent results approximately twice as much regenerated carbon was required than virgin carbon, Carbon losses of 20 to 25 percent were experienced in the regeneration process under conditions required for good quality carbon.

Granular Activated Carbon (GAC) Adsorption

Initially, carbon isotherms were constructed on four alternate carbons: Calgon F-300, Calgon F-400, ICI HD-3000 and ICI HD-4000. Calgon F-300 was selected for the GAC column operation based upon much superior toxicity reduction in the isotherm testing.

Initial column studies (up to September 1985) indicated that GAC was very effective in toxicity reduction and in removing soluble organic compounds from the wastewater, particularly the high molecular weight and non-polar compounds. Moderately high adsorption capacities were observed from the operation of three GAC columns in series utilizing an LC_{50} of 50 percent as the breakthrough criterion. Carbon usage rates were found to be within acceptable ranges (1 gram carbon per 0.09 to 0.12 g TOC removed). Thermal regeneration of Calgon F-300 did not appreciably alter its effectiveness.

Ozonation

Ozonation of the secondary effluent was also studied during the end-of-pipe treatment evaluation. It initially demonstrated some effectiveness but additional testing revealed that it was not as effective in reducing toxicity as other methods examined. Therefore, ozonation was abandoned as a feasible treatment alternative.

Basis for Selection of Method

Based on success with bench, pilot and full-scale studies, conversion of the existing biological system

to PACT using virgin carbon was the system of choice. The selection criteria of most significance were in the cases of installation, performance flexibility, and cost.

Follow-Up and Confirmation

Source reduction, source treatment and treatment system optimization efforts were completed between September 1984 and June 1986. The new treatment modifications were designed by June 1986 and installed by November 1986. Follow-up studies are presently underway at the facility.

Problems Encountered

Although there appeared to be a relationship between residual TOC and toxicity after biological and carbon treatment, it was not consistent from day to day. Some days an LC_{50} of 50 percent appeared to correspond to a TOC of 20 mg/L. Other days, it might be 10 mg/L or 40 mg/L.

During pilot plant studies for the PACT and biological treatment systems it was observed (in carbon regeneration) that the best condition for TOC removal was found to be the worst for carbon losses.

Results of toxicity testing for 22 Class D streams following biological treatment indicated that a synergistic effect may have existed which resulted in elevated toxicity.

Recommendations, Comments and Conclusions

As a result of conducting the TRE, the TOC loading in the treatment plant discharge was reduced by 23 percent in **1985** as compared to 1984. This was largely due to source treatment methods, process modifications, wastestream treatment, and improved housekeeping. By **1985,** as many as 27 Class A streams were treated, of which eight were treated at the source; five were precipitated to eliminate copper and chromium and **14** sulfide containing streams were air oxidized to generate a less toxic effluent. The discharge in six wastestreams was entirely eliminated during the same time.

A PACT system with a carbon dose of 250 mg/L would enable the company to comply with all discharge criteria.

The final results of the TRE indicated that if wet air regeneration of powdered carbon was used, the dosage could well increase to as much as double the virgin dose. Although ash accumulation is associated with it, it is believed it would be manageable, but carbon loss would be excessive.

Reference

Watkin, A. Evaluation of Biological Rate Parameters and Inhibitory Effects in Activated Sludge. Ph.D. Thesis, Vanderbilt University (1986).

Section A-8

Case History: Chemical Plant II

Introduction

Treatment alternatives to reduce the effluent toxicity of a chemical manufacturing plant were investigated. The facility was issued a new wastewater discharge permit which included an effluent toxicity limit based on toxicity tests with *Mysidopsis bahia* (mysids). An end-of-pipe 96 hour LC_{50} value of *50* percent to be achieved within 3 years, was required by the compliance schedule specified in the permit.

Initial Data and Information Acquisition

The chemical manufacturing facility is involved in the production of surfactants (alkylphenol, alcohol ethoxylates) and their derivatives and intermediates, and synthetic organic compounds such as aromatic hydrocarbon bases and tetrahydrofuran (THF). Effluent from the plant's process wastewater was a complex mixture, including "fresh water" discharges from chemical reactors, storage tanks, tank wagons, a drumming station, and equipment cleaning operations; "saltwater" discharges from cooling towers, fume scrubbing, and vacuum jets; and sanitary wastewaters, surface runoff and groundwater (carrying landfill leachate) also enter the wastewater system. Figure A8-1 depicts the plant wastestream schematic and the influent sources to it.

Plant or Process Description

The Waste Water Treatment Facility (WWTF) consisted of coarse screening, oil skimming, equalization, neutralization, activated sludge treatment and chlorination (Figure A8-1). The system was equipped with gravity thickening and pressure filter dewatering to enhance sludge handling.

Effluent Toxicity

The new permit required the WWTF to achieve an end-of-pipe 96 hr, static, daily replacement LC_{50} value of 50 percent effluent based on toxicity tests with *M. bahia* (mysid shrimp). Data indicated the effluent 96 hr LC_{50} was 3 percent. Influent toxicity ranged from 2.1 to 3.1 percent.

Existing performance data was not conclusive on the ability of the WWTF to reduce effluent toxicity. Therefore a toxicity reduction evaluation was conducted in three steps. System upgrade was required to comply with the new permit limits.

Evaluation of Treatment Process Optimization

Step one included the preliminary investigation and was aimed at assessing the feasibility of using the activated sludge process to reduce the toxicity of the effluent. Operating procedures, reseeding, ultimate toxicity reduction potential, and influent wastewater characterization were all examined.

The preliminary investigation indicated that at laboratory-scale, activated sludge system significantly reduced the effluent toxicity to *M. buhiu.* Effluent from two reactors (one seeded with municipal seed and the other seeded with industrial seeds) were tested. The source of the seed in the municipal sludge reactor was from a local POTW. The source of the seed in the industrial sludge reactor was from a sister-facility in another state. The period of acclimatization for the seed ranged from 4 to 8 weeks.

Results of these tests indicated that the reactor seeded with municipal sludge was in compliance with the toxicity limit (50 percent effluent LC_{50} value) half the time, while the reactor seeded with industrial sludge did so only 25 percent of the time, Variation was attributed to operational parameters of the reactor and not the seed characteristics. Unsynchronized operation of the reactors, different feed characteristics, and higher effluent TSS were among the factors responsible for these variations.

Attributes of the two reactors are summarized in Table AS-l. The average BOD_5 removal efficiency for the reactor seeded with municipal sludge was 88 percent while that seeded with industrial sludge was 83 percent. The unit seeded with municipal sludge exhibited 56 percent TOC removal efficiency,

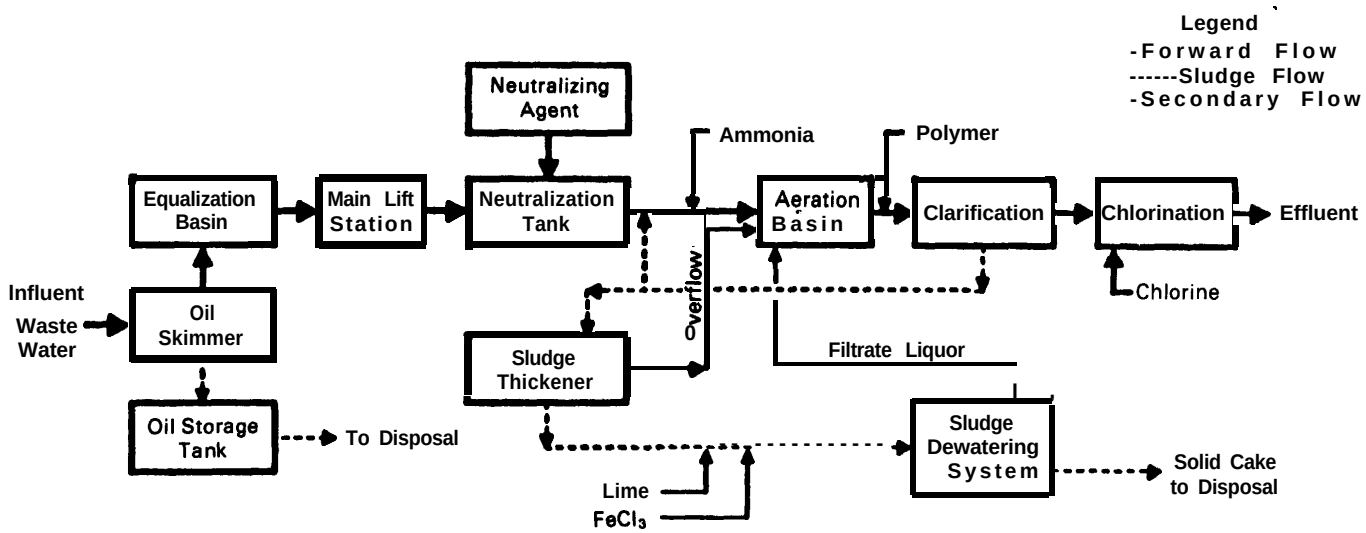

Figure A8-1. Wastewater flow and treatment schematic.

whereas the TOC removal efficiency for the unit seeded with industrial sludge was 51 percent.

Table A8-1. Comparison of Reactor Performance

	Municipal Sludge Reactor	Industrial Sludge Reactor
BOD_5 Removal Efficiency	88%	83%
TOC Removal Efficiency	56%	51%
Stable Mixed Liquor Volatile Suspended Solids	2000 mg/L	2000 mg/L
Zone Settling Velocity	11 ft/hr	15 ft/hr
Oxygen Uptake Rates	15 mg/hr	15 mg/hr

Both the reactors exhibited stable mixed liquor volatile suspended solids at a design concentration of about 2000 mg/L with consistently good sludge settling characteristics. The zone settling velocity for the municipal sludge reactor was 11 ft/hr while that for the industrial sludge reactor was 15 ft/hr. Consistent oxygen uptake rates (approximately 15 mg/hr) were observed for both the reactors.

From bench scale results it was concluded that plant optimization may result in near compliance with toxicity requirements. Based upon this, all efforts were directed towards making necessary improvements to the treatment plant and confirming the bench scale results in a pilot scale system. Unfortunately, the pilot scale results deteriorated over a three month period with no apparent change in conventional parameters.

Toxicity Identification Evaluation (TIE)

The second step of the TRE was aimed at identifying the specific causes for effluent toxicity, investigating the effectiveness of end-of-pipe treatment alternatives, testing certain plant product groups for their biodegradability/toxicity reduction, and observing the effectiveness of several physical-chemical processes to treat the plant's products. It included onsite, pilot plant investigations during which the activated sludge process was tested under a range of organic loadings and hydraulic retention times.

Laboratory tests were conducted to determine whether the activated sludge process could be used to reduce toxicity in segregated (concentrated) process wastewaters without inclusion of cooling waters, boiler blowdowns or surface runoff. A secondary objective of this investigation was to assess the impact of "rare" wastewater discharges on the performance of the activated sludge process.

Causative Agent Identification

During the second and third steps of the study, the identification of effluent components responsible for the toxicity of the wastestream was investigated. Mysid toxicity tests were conducted with pilot plant reactors continuously fed from the equalization basin effluent. The results did not indicate any correlation between the plant production profile and effluent LC_{50} values.

Results of paired LC_{50} tests indicated that toxicity increased with organic loading and the lowering of operating temperature. Filtered effluent samples were less toxic than those of the corresponding unfiltered samples. Analysis of the effluent using HPLC technology showed a positive correlation between effluent toxicity and nonylphenol (NP) concentration in the effluent.

Continuous flow reactors were fed with aliphatic based compounds. Reactors #1 and #3 had TOC removal efficiencies of 89 percent and 86 percent respectively. Reactors #2, #4, and #5, which were fed with aromatic based products achieved approximately 80 percent TOC removal efficiency. However, reactor #6, which was fed with linear nonylphenol ethoxylate (NPEO) had TOC removal efficiency of only 74 percent. The results indicated that reactors fed with NP exhibited higher toxicity based on TOC removal than other reactors.

A comprehensive analysis of the TOC, NP and NPEO and ammonium (NH_4-N) concentrations in the effluent was then conducted. It established a correlation between the LC_{50} and effluent concentrations of NP and NPEO.

Batch test results from the end-of-pipe investigations also established a positive correlation between NPEO concentrations and effluent toxicity. An LC_{50} value of 100 percent effluent could be reached at concentrations of NPEO below 0.07 mg/L. Even though NPEOs may not have been the sole cause of toxicity in the effluent, they were a good indicator of the presence of a larger class of toxic constituents.

Confirmation of Source or Agent

End-of-pipe and at-source treatment investigations concluded that NPEO was the principle toxic component in the WWTF effluent samples.

Treatability Evaluations

The last step of the toxicity reduction evaluation was carried out to test the effectiveness of proposed source and end-of-pipe treatment systems at both bench- and pilot-scale. It was aimed at screening the at-source and end-of-pipe treatment options. It included several additional tasks which were aimed at evaluating specific causes of effluent toxicity.

Based on the results of the plant studies during Steps II and III, it was determined that effluent from the existing biological treatment unit could not meet the levels proposed by the new permit. To comply with a whole effluent toxicity limit of an $LC_{50} \geq 50$ percent effluent, at-source treatment and end-of-pipe treatment options were identified. These are described below.

Source Treatment

This was a technically and an economically feasible alternative. It involved separation of highly concentrated, low-flow process wastewaters from the non-contact cooling water and some lightly contaminated flows (fume scrubbings, vacuum jet streams, etc.). Following pretreatment, the wastewater was combined with other plant flows for conventional treatment prior to discharge.

Seven individual products of the company were batch treated with activated carbon, activated alumina, alum, Fuller's Earth and ion exchange resin. Activated carbon was identified as a feasible alternative as it consistently eliminated 90 percent of the seven products tested. The other treatment methods failed to demonstrate consistency in reducing toxicity.

End-of-Pipe Treatment

Various tertiary treatment processes were evaluated which included adsorption using selective agents (activated carbon, Fuller's Earth, activated alumina and ion exchange resin), alum treatment, and chemical oxidation using hydrogen peroxide. The feasibility of operating the Powdered Activated Carbon Treatment (PACT) and Granular Activated Carbon (GAC) treatments were also assessed. The PACT treatment was very efficient (approximately 100 percent removal) in removing the NPEO at dosages of 200 mg/L. Treatment with alum, activated alumina and ion exchange resin resulted in NPEO removal just over 50% at dosages of 200 mg/L.

Activated carbon treatment was determined most effective based upon removal of the toxicity causing agents. The cost of both the PACT and GAC technologies were similar. However, the PACT process did not require facility modification while the GAC treatment process required another facility for its operations. End-of-pipe treatment with alum was not seriously considered because of the limited data available on its capabilities.

Final Comments, Recommendations and Conclusions

This TRE proved to be of great benefit in identifying the cause of the effluent toxicity. The TRE also helped identify the feasible treatment alternatives. The end-of-pipe PACT treatment system was a viable alternative because it achieved effluent LC_{50} values of ≥ 50 percent effluent as required by the permit, and could be implemented without facility modification.

The biological source treatment was another attractive option which appeared technically and economically feasible. End-of-pipe alum treatment and the use of GAC (following biological treatment) were not viable processes to introduce due to limited data and high capital and operating costs.

Pilot plant (activated sludge) studies indicated that addition of polymer to the wastestream was effective in controlling effluent suspended solids. The BODs

and the TOC in each of the 6 reactors were in compliance with the new permit limits. The concentrations of phenol, surfactants (MBAS), oil and grease also achieved permit limits.

Section A-9

Case History: TRE of I.T.T. Effluent

Introduction

The following is a description of the toxicity reduction evaluation (TRE) conducted at the I.T.T. Rayonier plant (Mount and Anderson-Carnahan, 1986). I.T.T. Rayonier, Inc., located on the Amelia River at Fernandina Beach, is one of Florida's major industrial facilities. Figure A9-1 presents a schematic diagram of the processes in the I.T.T. Rayonier wastewater treatment system. In order to resolve outstanding NPDES permit issues associated with I.T.T.'s effluent discharge, and to implement a site-specific application of EPA's "Policy for the Development of Water Quality-based Permit Limitations for Toxic Pollutants", a number of issues were studied at the I.T.T. plant. Toxicity identification and reduction was an important segment of the study.

Initial Data and Information Acquisition

Plant Description

The I.T.T. plant manufactures chemical cellulose (pulp) from Southern pine by the sulfite process. Effluent control consists of red liquor evaporation and burning, primary, and secondary treatment *(standard in the industry).*

Characteristics of Effluent

Wastewater characteristics of the treated effluent during May 14-21, 1986 are presented in Table A9-1.

Toxicity Identification Evaluation (TIE)

A preliminary effluent characterization was performed with effluent samples collected during July 1985 and March 1986. An on-site study of the effluent using two mobile toxicity test laboratories was performed during May 13-26, 1986.

Data Collection and Methods

For the on-site study, grab and 24-hour time cornposited samples were collected from the aeration lagoon near the point of discharge. Table A9-2 shows a listing of the samples. These samples were coded according to the date of collection (month/day) and the number of the sample collected that day (I, II, III,..). Phased testing was conducted with the collected effluent.

The physical and chemical properties of the effluent toxicant(s) were first isolated and characterized using a parallel series of tests. Each test was designed to remove or render biologically unavailable a specific group of toxicants, such as oxidants, organics, metals, etc. Timed lethality tests using *Ceriodaphnia* were performed before and after the test treatment to indicate the effectiveness of the test, and hence the nature of the toxicant(s). A series of blanks and controls were used with each test to insure that no toxic artifacts had been created during sample manipulation. The variability of the compounds causing toxicity was assessed by repeating the toxicity characterization test series using samples collected over a period of time. Both the 48-hour LC_{50} value and average time it took to cause 50 percent lethality in *Cerioduphnia* were used to measure the relative toxicity of the baseline effluent. Other tests employed only timed lethality tests to assess the change in toxicity. Five toxicant characterization tests were used in parallel during the study.

Filtration – This procedure is used to indicate whether toxicants were associated with filterable materials. Also, since the filtered effluent was used in another characterization test, it was necessary to assess the effect of filtration on effluent toxicity.

Air-stripping – This is used to characterize the volatility and oxidizability of causative toxicants. By adjusting the pH of the effluent prior to stripping, the acidic or basic nature of the toxic compounds can also be assessed.

EDTA chelation – By adding increasing doses of EDTA to aliquots of effluent, toxic cationic elements, like lead, copper, cadmium, nickel, zinc, etc. are complexed with an organic ligand to produce a nontoxic form of the cation. The time to mortality should increase as the EDTA dose increases (provided that toxic levels of EDTA are avoided).

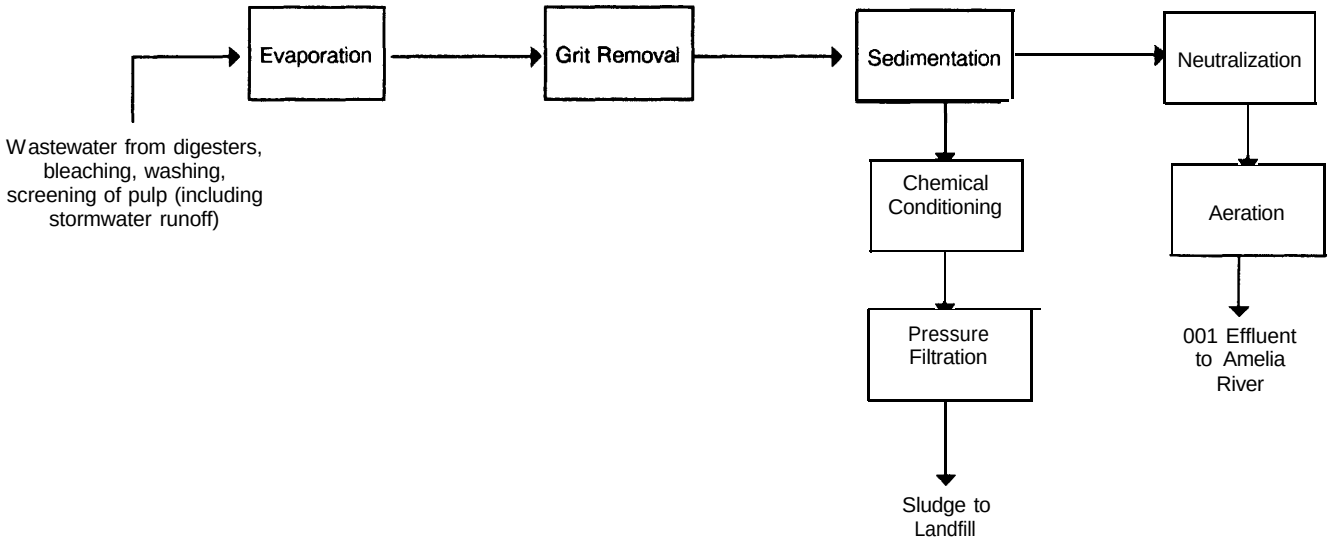

Figure A9-1. A schematic diagram of the processes in the I.T.T. Rayonier wastewater treatment system.

Table A9-1. Additional Wastewater Characteristics During May 14-21, 1988

Effluent Characteristics	Average Value	Range
Dissolved Oxygen (mg/L)	0.80	0.5-l .2
pH (Std. Units)	7.6	7.5-7.6
Alkalinity (mg/L)	269	218-334
Hardness (mg/L)	648	540-746
Conductivity (umhos)	2616	1674-3165

Table A9-2. Description of I.T.T. Rayonier On-Site Samples[a]

Sample (month/date/code)	Description
5/14/I	Composite Sample[b] 5/13 - 5/14/86
5/15/I	Composite Sample 5/14/86 - 5/15/86
5/15/II	Grab Sample 5/15/86 - 4:30 pm
5/16/I	Composite Sample 5/15 - 5/16/86
5/16/III	5/16/I Composite spiked with NH_4SO_4 (as 100 mg/L NH_4)
5/17/I	Composite Sample 5/16 - 5/17/86
5/16/II	Grab Sample 5/17/86 - 9:00 am
5/18/I	Composite Sample 5/17 - 5/18/86
5/18/II	Grab Sample 5/18/86 - 9:30 am
5/18/III	Grab Sample 5/18/86 - 12:30 pm
5/18/IIIA	5/18/III Sample spiked with NH_4SO_4 (as 100 mg/L NH_4)
5/18/IIIB	5/18/III Sample raised to pH 11, aerated for 2.25 hours and returned at pH 7.5
5/18/IIIC	5/18/III Grab Sample (unaltered)
5/18/IIID	5/18/III Sample spiked with NH_4SO_4 (as 100 mg/L NH_4) and aerated

[a] All samples collected in the aeration lagoon near the point of discharge.
[b] 24 hour composite sampling from 9:00 am to 9:00 am.

Oxidant reduction – This is similar to the EDTA test, except that EDTA is replaced by sodium thiosulfate (a reducing agent) The test indicates whether toxic levels of inorganic oxidants such as chlorine, chloramines, or electrophilic organics are present.

C_{18} solid phase extraction – This column removes nonpolar organics and chelated metal complexes from the effluent. By adjusting the pH of the effluent, information on the acidity or basicity of the causative toxicants can also be gained.

Other Toxicity Tests

Short-term chronic toxicity tests were performed using *Ceriodaphnia reticulata* and *Pimephales promelas* (fathead minnow). Acute and chronic toxicity tests were conducted with the marine organisms *Arbacia punctulata* (sea urchin), *Champia parvula* (red algae), *Mysidopsis bahia* (mysid shrimp), *Menidia beryllina* (silverside minnow), and *Cyprinodon uariegatus* (sheepshead minnow). The recently developed *Lemna minor* (duckweed) chronic toxicity test was also used. The *Cerioduphnia* species was chosen for the timed lethality tests because of its sensitivity and convenience of use.

Effbent Toxicity

Prior to the May 1986 on-site study, several samples of I.T.T. effluent were subjected to a preliminary analysis. The first sample (July 1985) produced rapid lethality to *Cerioduphnia*. Subsequent characterization tests indicated that toxicity could be reduced by adding EDTA. Chemical analysis data for the effluent sample were compared to metal toxicity data from the literature. Copper and zinc appeared to be the toxic agents in this sample. This sample also had a very high level of suspended solids. This

sample was considered by I.T.T. to be very atypical of their effluent.

To confirm these early results and to assess toxicant variability, a second sample of I.T.T. effluent was collected in March 1986. This sample appeared to be lower in suspended solids, zinc, and lead, and had an acute toxicity that was much lower than the July 1985 sample. EDTA addition did not affect the acute toxicity. The acceptable effluent concentration of the sample in a chronic *Cerioduphnia* test was between 6 (NOEC) and 12 (LOEC) percent.

Previous effluent studies by the I.T.T. staff indicated a potential for ammonia toxicity. Hence, this possibility was investigated for the March 1986 effluent. When the effluent pH was raised (effectively increasing the concentration of the toxic un-ionized form of total ammonia), it was found that the acute toxicity of the sample to *Cerioduphnia* increased. Lowering the pH prevented acute toxicity in *Ceriodaphnia*. Similar additions of acid and base to control water did not cause lethality in *Cerioduphnia*. However, when control water was spiked with ammonia at concentrations equivalent to the effluent, organism lethality occurred at similar times to the effluent at the same pH.

Characterization and Fractionation

Because of the apparent difference in causative toxicants in the two preliminary samples (metals versus ammonia), a more in-depth characterization study using a number of samples collected over a period of time was conducted (May 13-26, 1986). A Phase I battery of tests was run on the samples.

Except for the air-stripping test, the toxicity of the 5/13/I effluent remained essentially unchanged. Raising the pH of the effluent sample to 11, moderately aerating for 255 minutes, and readjusting it to the initial pH (7.4) prevented acute toxicity in C. *dubicz*. Aeration in general appeared to prolong the time to mortality in the neutral. and acidified effluent samples. These results indicated that the causative toxicant was volatile and basic in nature. Ammonia (one of the production raw materials) fits into this category.

The decision was made to focus subsequent characterization tests primarily on ammonia (air stripping and pH adjustment tests) and, to a lesser extent, on metals (EDTA chelation test).

To further validate ammonia as the causative toxicant, a series of samples were split for chemical analysis and toxicity testing. EDTA addition to a portion of the samples did not reduce toxicity. It was also found that the sample toxicity decreased with decreasing pH. Had cationic metals been the cause of effluent toxicity, toxicity should have decreased with decreased pH due to the increasing concentration of biologically available metal cations. A chemical analysis of the metal content of various samples showed that the levels of copper, zinc, and lead in the May 1986 samples were much lower than the July 1985 levels (when EDTA chelation decreased toxicity, probably due to copper). Again, the data indicated that ammonia was the primary toxicant.

Confirmation of Causative Agent

The main objective of this phase of the study was to correlate effluent sample toxicity and the NH_3 concentration (taking into account the differences in effluent pH). In order to prove that such a correlation exists, it is necessary that sample toxicity and NH_3 concentration vary. To insure that there would be some variability, several samples were spiked to increase the range of NH_3 concentrations encountered. One of these samples was also aerated with the intent of reducing the concentration of unionized ammonia. Following 2.25 hours of aeration at a relatively constant pH of 11, the total ammonia concentration was reduced from 90 to 67 mg/L as N. The results of the toxicity tests and ammonia analyses are presented in Table A9-3. The pHs of the effluent sample/dilution water mixture producing the lowest observed effect level (LOEL) and no observed effect level (NOEL) were recorded at 24 and 48 hours. The initial pH of the solutions drifted from 7.2 - 7.4 to slightly higher values with time. The final pH values for each solution were used in the calculations for unionized ammonia concentrations. In most instances, the pH of the solution producing the LOEL was 0.05 units higher than the pH of the solution producing the NOEL. This information was used to estimate the pH in several LOEL mixtures.

In order to calculate the unionized ammonia concentration in the effluent mixture producing the sample LC_{50}, the concentration of unionized ammonia producing LOEL and NOEL was first calculated using the pH and total ammonia concentration in each and a test temperature of 25°C. For the purpose of mass balance, it was assumed that the dilution water had a negligible concentration of total ammonia. Graphing the results and using linear extrapolation, the approximate pH and concentration of unionized ammonia in the effluent mixture producing an LC_{50} was determined.

A plot of the sample LC_{50} (as % effluent) versus the NH_3 concentration in effluent sample/dilution water mixture producing the LC_{50} yielded a significant regression at $P < 0.01$. Thus effluent toxicity correlated with NH_3 concentration.

The effect of pH and temperature, both on the percent of total ammonia present in the unionized form and on the toxicity of the unionized form, must

Table A9-3. Toxicity and Ammonia for I.T.T. Rayonier Effluent Samples

Sample[a]	LC_{50} (% Effluent)	Total Ammonia 100% Effluent mg/L	pH[b] LOEL	pH[b] NOEL	NH_3-N(mg/L) LOEL	NH_3-N(mg/L) NOEL	NH_3 Conc. in Effluent/Dilution Water Mixture Producing LC_{50}
5/14/I	56	62	7.9	7.85	2.68	1.20	1.35
5/15/I	32	72[c]	7.7	7.65	1.0	0.45	0.62
5/15/II	39	80	7.65	7.65	0.99	0.5	0.78
5/16/I	41	76	7.8	7.8	1.31	0.66	1.08
5/16/II	58	79	7.85	7.75	2.28	1.25	1.68
5/16/III	Ia	120	7.8	7.75	1.04	0.47	0.69
5/17/I	53	92[c]	7.85	7.8	2.67	1.59	1.73
5/17/II	58	89	7.85	7.8	2.59	1.56	1.59
5/18/I	61	104	7.35	7.55	0.98	1.03	1.0
5/18/II	53	94[c]	7.7	7.65	1.95	1.13	1.26
5/18/IIIA	35	144	7.55	7.55	1.43	0.71	1.02
5/18/IIIB	43	67	7.65	7.65	0.84	0.40	0.73
5/18/IIIC	38	90	7.55	7.6	0.89	0.51	0.72
5/18/IIID	35	156	7.6	7.5	1.72	0.69	1.08

[a] for a description of the sample and sample code, see Table A9-2.
[b] pH of effluent/dilution water mixture producing the LOEL and NOEL was recorded at 24 or 48 hours, depending on when organism mortality occurred.
[c] Estimated based on the pH data from other effluent/dilution water mixtures producing the LOEL.

be recognized. This information was pivotal in correlating the concentration of ammonia in samples with their LC_{50}s and also allowed testing equitoxic concentrations of NH_3 at different pHs in the effluent and spiked control water. For additional information on this subject, the reader is referred to EPA's report ITT Rayonier Toxicity Reduction Evaluation (Mount and Anderson-Carnahan 1986) and to EPA's TIE Phase I Document (U.S. EPA 1988).

A final sample of the I.T.T. effluent was taken in June 1986 for use in a pH adjustment test. The total ammonia concentration in the June 1986 effluent sample was 83 mg/L. Control water was spiked with NH_4Cl to produce a solution with 80 mg/L NH_3. Aliquots of the effluent and of control water were adjusted to pH 7.5, 8.0, and 8.5. The symptoms exhibited by the test organisms (*Ceriodaphnia*) during the first six hours (the time during which an equally toxic concentration of NH_3 was present in each sample, and before pH started drifting) gave strong evidence of ammonia toxicity.

The effect of the I.T.T. effluent on *Champia parvula* reproduction (as measured by the number of cystocarps produced) is shown in Figure A9-2. Also plotted is the effect of NH_4Cl on C. *parvula* reproduction. As the effluent and NH_4Cl solutions are diluted with control water, the effect is nearly identical. The similarity of the two curves is significant for ammonia as the likely causative toxicant.

A comparison of the I.T.T. effluent toxicity data for three marine species (*C. parvula, M. bahia,* and *Menidia beryllina*) and the fathead minnow, with ammonia toxicity data in the literature at corresponding pH and temperature values was also conducted. The I.T.T. effluent NH_3 toxicity data fell within the range of NH_3 sensitivity values in the literature.

The case for confirmation of ammonia as the cause of effluent toxicity is thus based on four areas of evidence.

(1) The effect of pH on the toxicity of the effluent.

(2) Symptoms exhibited by test organisms exposed to the effluent and to standard ammonia solutions.

(3) The relative sensitivity of four aquatic species to ammonia.

(4) Good agreement with ammonia toxicity data in the literature.

Also, causative toxicant tests for cationic metals, electrophiles, neutral and acidic volatile compounds, adsorbed toxicants, nonpolar organics, and metal chelates failed to indicate alternate sources of toxicity. The toxicity of the atypical July 1985 sample, however, was obviously not caused by ammonia.

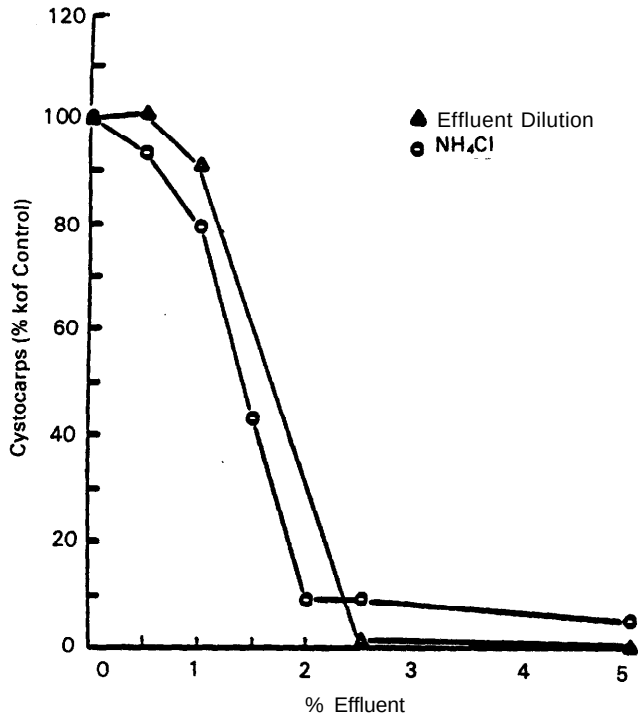

Figure A9-2. Number ot cystocarps tor *Champia parvula* (as % ot control) plotted against % ettluent.

Note: The effluent data are averages from May *17* and 18. The ammonia chloride data are based on *70* mg NH, - N/L in the effluent. A stock solution of 26.7 mg NH_4Cl/100 ml was used.

Toxicity Reduction Approaches

Treatability Evaluation

The TRE study conducted during May, 1986 suggested strongly that ammonia was the major chemical causing toxicity in the wastewater. Removal of ammonia may be achieved by chemical, physical or biological methods. Some commonly used ammonia removal processes are presented in this section. Each technique is briefly described with special features or requirements noted.

Air Stripping

Ammonia in water is in equilibrium with the ammonium ion.

$$NH_3 + H_2O \leftrightarrows NH_4^+ + OH^-$$

When the pH is raised above 7, equilibrium shifts to the left to form more unionized ammonia which may be removed by agitating the aqueous sample in the presence of air. In wastewater treatment practice, ammonia removal is accomplished by increasing pH to the range 9-11 and allowing wastewater to flow through a packed tower equipped with an air blower. As the temperature of the operation falls, more air is required to strip ammonia. Cold temperatures can also cause freezing and $CaCO_3$ scaling. For the I.T.T. effluent, raising pH up to 11 and moderately aerating for 255 minutes were effective in removing ammonia. After stripping ammonia, pH can be readjusted to desired levels.

Nitrification - Denitrification

Ammonia can be biologically oxidized to nitrite, and then to nitrate by nitrifying bacteria under aerobic conditions. Removal of the nitrates is accomplished by treating wastewater with dentrifying bacteria which reduce nitrate to nitrogen in an anaerobic environment. The advantages associated with nitrification - dentrification processes are (a) high potential removal efficiency, (b) process stability and reliability, (c) easy process control, and (d) moderate cost. The optimum pH range for nitrif'ication is from 8.2 to 8.6. For dentrification, the optimum pH is between 6.5 and 7.5. Another significant factor in this process is temperature. Effluent quality may deteriorate at lower temperatures, though the solids in the system could be increased to accommodate cold temperature operation.

In addition to these processes, ammonia can also be removed by electrochemical treatment, chlorination, ion-exchange or bacterial assimilation. But these latter options may not be suitable in this case.

Problems Encountered

One problem encountered was that in the small volumes (5 ml aliquots) of effluents used for the tests, many of the air stripping and pH adjustment tests were frustrated by shifts in pH adjusted and unadjusted samples exposed to air. Larger volumes could not be used however, due to poor visibility in the highly colored effluent. Because of this problem, alternate strategies were also used to confirm the extent of toxicity caused by ammonia. Since invertebrates are generally more tolerant of un-ionized ammonia than fish, toxicity tests were performed using both C. ***dubia*** and ***Pimephales promelas*** (fathead minnow). The 5/15/I sample was observably more toxic to the minnow as were control water samples spiked at 100 and 200 mg/L as NH_4^+ (Ammonium Sulfate).

References

Mount, D.I. and L. Anderson-Carnahan. "ITT Rayonier Toxicity Reduction Evaluation." U.S. Environmental Protection Agency Internal ORD Report, October 1986.

U.S. Environmental Protection Agency. "Methods for Aquatic Toxicity Identification Evaluations: Phase I - Toxicity Characterization Procedures," Second Draft dated June 1988.

Section A-1 0

Case History: Monsanto Chemical Manufacturing Facility

Introduction

Monsanto's Environmental Science Center (ESC) has developed, tested and refined a Toxicity Identification Evaluation (TIE) protocol which has been used successfully to identify toxic compounds in several wastestreams (Doi and Grothe 1987). In general the procedure uses both chemical (cation and anion resins) and physical (helium sparging filtration) separation to divide an effluent into inorganic and organic fractions. The procedure is followed by toxicity testing of each fraction in order to identify and eventually abate the source of toxicity. Once toxic constituents are known, remedial activities can be planned.

Effluents from three chemical manufacturing plant sites were used to evaluate the utility of the protocol. Three effluents were selected based on the results of acute toxicity tests conducted on ***Duphnia magna,*** which indicated an EC_{50} of less than 100 percent. Each effluent came from an individual site (dubbed sites 1, 2, and 3 in this study).

Initial Data and Information Acquisition

Site *1*

The wastewater at this site was a relatively complex mixture which contained a number of organic and inorganic constituents. The team was also aware of the fact that the wastewater had a relatively high total ammonia content (100 - 300 mg/L). Although it had been speculated that ammonia may be responsible for the wastewater toxicity to ***D. magna,*** earlier investigations failed to show that ammonia was responsible for the toxicity of this wastewater.

Site 2

The wastestream at Site 2 was comprised of four stormwater and/or cooling water inputs. The effluent being investigated was known to contain hexavalent chromium, chlorine, and biocide, which were used to prevent corrosion and growth of algae and microbes in the piping system.

Historical toxicity data collected in 1985 indicated that the final effluent was toxic to ***D. magna.*** It was speculated that hexavalent chromium could be responsible for the effluent's toxicity since the concentrations of hexavalent chromium in the wastewater (100 - 200 ppb) were comparable to acute effect levels (20 - 212 ppb) reported in the literature for ***D. magna. No*** information was available on the acute toxicity of the biocide.

Site *3*

The effluent at Site No. 3 was a complex chemical mixture containing a number of inorganic and organic substances. Operation reports showed the effluent to have a very high conductivity (10,000 to 25,000 micro mhos/cm). The existing levels of calcium (300 mg/L), sodium (1020 mg/L) and chloride (7310 mg/L) ions were associated with the high conductivity.

Toxicity tests have been performed on the effluent with the fathead minnow since the mid-1970's for inhouse and regulatory compliance purposes. The results of these tests indicated that the 96 hour LC_{50} was typically between 45 percent and 80 percent. The toxicity of the effluent was speculated by a number of investigators to be associated with the high salinity of the wastewater.

Toxicity /den tifica tion Evaluation (Tl E)

The main objective was to isolate and identify the factors contributing to effluent toxicity. In order to achieve this, ESC employed the testing scheme illustrated in Figure A10-1 (based on concepts of Walsh and Garnas (1983)) which utilized the ion-exchange resin technology to fractionate the effluent mixture into organic and inorganic constituents. Once the effluent mixture was separated into fractions, their potential toxicity was determined by subjection to selected aquatic species. Additional fractionation of the organic and inorganic constituents would be necessary if either fraction was found toxic to the test species.

Besides conducting toxicity tests on each of the fractions, TOC (total organic carbon) and ICP

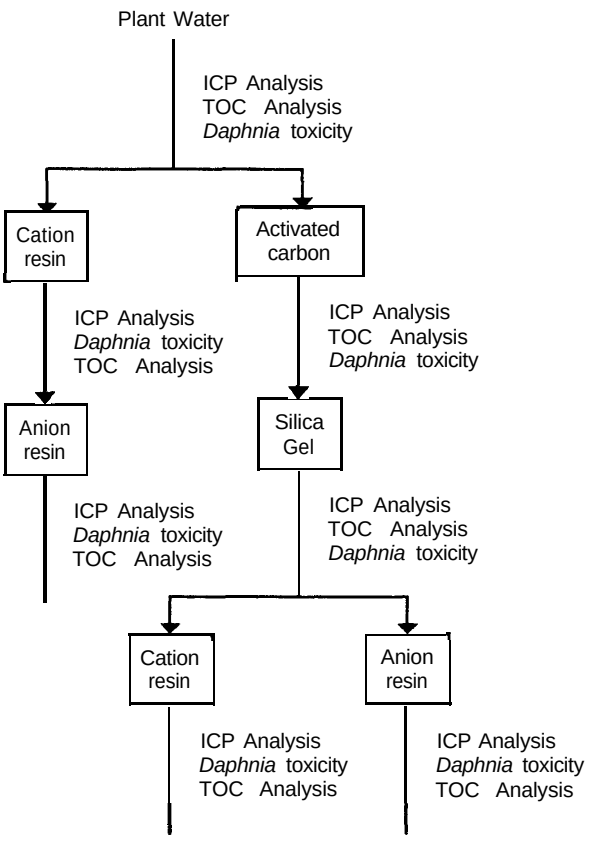

Figure Al O-l. ESC effluent fractionation and testing scheme.

(inductively coupled plasma) measurements were performed on the organic and inorganic fractions (see Figure A10-1) to determine if a correlation existed between toxicity and a specific chemical constituent. Synthetic effluent (which contained a suspected compound in control water at the same concentration as in the natural effluent) tests were also performed to gain additional insight about the source of toxicity. Toxicity of the plant effluent was compared to the synthetic effluent and in an event where toxicity tests showed similar results, the suspected compound(s) would be implicated as the source of the toxicity.

Site 1

The fractionation scheme utilized five treatments of activated carbon, cation and/or anion exchange resins and one treatment with zeolite (which is composed of hydrous silicates). Site 1 effluent was subjected to each of these separation processes, and concurrent acute toxicity tests were conducted in duplicate with each fraction using 100 ml of the test solution and *D. magna* as the test species (ten first instar daphnids), based on the guidelines recommended by the U.S. EPA's Methods for Acute Toxicity Tests with Aquatic Organisms.

Of the six treatments evaluated, only a sequential treatment with activated carbon, cation and anion exchange resins and zeolite was effective in eliminating the toxicity of the effluent. All other treatments had no effect in reducing effluent toxicity. Examination of the TOC, ICP and ammonia analyses indicated no apparent correlation between toxicity and organic or inorganic constituents.

Because only limited information existed in the literature regarding the acute toxicity of ammonia to *D. magna*, the ESC team conducted toxicity tests using ammonium chloride in a synthetic effluent. Six effluent concentrations were tested using well water (pH = 8.5; hardness = 160 mg/L) from eastern Missouri as dilution water and a control. The 48 hr EC_{50} values and their 95% confidence limits for total ammonia and un-ionized ammonia were found to be 32 mg/L (18.1 to 36.2 mg/L) and 0.35 mg/L (0.2 to 0.4 mg/L), respectively. Based on these acute effect levels and the results of the toxicity tests with the effluent and treatment fractions, the concentration of un-ionized ammonia in the untreated effluent, activated carbon, and anion treatments were determined to be well above the acute effect concentration for ammonia. However, un-ionized ammonia concentrations in the cation resin treatments were below the acute effect concentrations, even though this treatment exhibited toxicity to *D. magna*.

On further investigation, it was found that when the stock solution of 300 mg/L NH_4Cl was passed through the cation exchange resin, toxicity to *D. magna* persisted even though ammonia levels were reduced to <1 mg/L. It was hypothesized that an unknown toxic component was being released from the resin during the exchange process.

Site 2

A series of on-site acute toxicity tests using *D. magna* revealed that the final undiluted effluent at Site 2 was consistently toxic to *D. magna*.

An investigation was initiated, using *D. magna* as the test organism, to determine if the specific toxic agents could be isolated. ESC initially attempted to determine if metals could be responsible for the toxicity by adding a chelator (1 mg/L sodium NTA), which would bind with the metals (does not bind the hexavalent chromium) and prevent their uptake by the test species. The addition of NTA, however, had no effect in reducing effluent toxicity. Sodium thiosulfate (1.0 mg/L) and sodium sulfite (4.2 mg/L) were added to the wastewater to neutralize any chlorine and biocide which may have been present. These compounds also failed to reduce effluent toxicity.

D. magna toxicity tests, ICP, TOC and hexavalent chromium analyses were also conducted at various locations along the wastewater drainage system in an attempt to determine if a source of toxic agent could be identified. Although no correlation was found between toxicity and the TOC and ICP results, a correlation was found between hexavalent chromium levels and toxicity. The results illustrated that the most upstream sample (sampling point A) had the lowest concentration of hexavalent chromium (29 ppb) and exhibited the least acute toxicity to *D. magna* (48 EC_{50} = 80 percent effluent). On the other hand, samples collected at sampling point B and other locations along the wastestream exhibited increases in both effluent toxicity and hexavalent chromium levels. Final untreated effluent (containing 241 ppb of hexavalent chromium) produced 100 percent mortality within 48 hours.

Once this relationship was observed, the ESC team fractioned the wastewater by passing 200 ml subsamples of the effluent through granular activated carbon, cation and anion exchange resins. They then evaluated the wastewater for acute toxicity to ***D. magna.*** The team also monitored the hexavalent chromium concentrations prior to and after each treatment to establish a correlation between toxicity and hexavalent chromium. The results of these studies indicated that there was a direct correlation between hexavalent chromium and toxicity to ***D. magna.***

Treatment of the wastewater with anion exchange resin and activated carbon, resulted in no mortality to ***D. magna.*** The concentrations of hexavalent chromium in these treatments were 10 ppb (anion resins) and 20 ppb (activated carbon resin), which are below or near the lowest reported acute level for ***Daphnia.*** The cation resin failed to lower the concentration of hexavalent chromium (210 ppb). This treatment provides further evidence that hexavalent chromium was likely responsible for wastewater toxicity.

To confirm whether the acute toxicity originally observed in the final effluent at Site No. 2 was due to hexavalent chromium, ESC plotted and analyzed dose-response curves for effluent and hexavalent chromium (synthetic effluent) toxicity tests. The 48 hour EC_{50} for hexavalent chromium concentrations in the effluent (35 ppb) was compared to the 48 hour EC_{50} (41 ppb) for the hexavalent chromium in the synthetic effluent. The similarities between these two concentrations supported the hypothesis that hexavalent chromium was likely responsible for the observed toxicity. Further confirmation of chromium as the toxic component was supported by the fact that when the plant stopped using hexavalent chromium, the wastewater became nontoxic.

Site 3

To determine if salinity could be responsible for Site No. 3 effluent's toxicity ESC conducted a comparative acute toxicity study by subjecting fathead minnows to the final effluent (from the plant discharge) and a synthetic effluent (a solution of sodium chloride, calcium chloride and well water). The concentrations of Na, Ca and chloride were similar to those occurring in the natural effluent (Na = 1020 mg/L, Ca = 3000 mg/L, Cl = 7310 mg/L). The results of this comparative study indicated that salinity could be responsible for the toxicity of the effluent since essentially identical 96 hr LC_{50} values were observed for the natural effluent (LC_{50} = 79 percent) and synthetic effluent (LC_{50} = 70 percent).

ESC then conducted fractionation tests on effluent samples to verify the causative agents by passing effluent over four separate resins (granular activated carbon, cation exchange resin, anion exchange resin and cation followed by anion exchange resin). ***D. magna*** acute toxicity tests conducted before and after resin treatment indicated that neither the activated carbon, nor cation/anion exchange resins could eliminate effluent toxicity. No correlation existed between toxicity and TOC. However, a correlation did exist between toxicity and calcium and/or chloride ion concentrations since the concentrations of calcium and chloride in the final effluent, activated carbon, and anion exchange resin treatments were well above the acute toxicity concentrations for ***D. magna.***

The fact that calcium was one of the toxic components in the effluent was further verified by a comparison of the calcium concentration in the effluent and corresponding dose response curve to reported effect levels (Rodgers, et al. 1987) for calcium in fathead minnows (96 hr LC_{50} values = 2766 mg/L). Based on the test data, the 96 hour LC_{50} for the natural effluent was 79 percent. The calcium concentration in the 100 percent effluent was 3000 mg/L with a predicted nominal calcium content in the 79 percent effluent of 2400 mg/L indicating a correlation between calcium concentration and toxicity.

Additional synthetic and natural effluent toxicity tests were conducted to verify calcium and chloride ions as the toxic components. Approximately one-half of these tests showed a strong correlation between the synthetic and final effluents. The fact that no correlation was observed between some of the tests indicated that another factor(s) may at times be responsible for the toxicity of the effluent.

ESC confirmed that calcium and chloride ions were the sources of toxicity to ***D. magna*** in the effluent by preparing a synthetic effluent which contained (only) calcium, sodium and chloride ions and compared the

dose response curves of the tests with dose response curves using the final effluent which contained the same concentrations of calcium, chloride and sodium ions. A distinct relationship was observed in these test results and this in effect established and confirmed that calcium and chloride ions were principally responsible for the effluent toxicity.

Toxicity Reduction Approaches

Site 1

The final effluent from Site **1** was evaluated for acute toxicity to ***D. magna*** after passing the effluent through granular activated carbon, cation and anion resin, combination treatment and the zeolite treatment. The absence of mortality in the treated final effluent showed that the concentration of ammonia was reduced to below the acute toxicity threshold.

Site 2

The toxicity of the original effluent to ***D. magna*** was eliminated through treatment of the effluent with activated carbon and anion exchange resin. These techniques in effect reduced the concentration of hexavalent chromium which was responsible for the effluent toxicity. ESC also examined other treatment methods such as cation exchange resin. However, this technique failed to reduce toxicity.

Site 3

The TIE study indicated that a combination of anion and cation exchange resins eliminated toxicity in the final effluent.

Follow-Up and Confirmation

Site 2

ESC reevaluated the effluent for acute toxicity after the management at Site 2 permanently eliminated the use of hexavalent chromium. On doing so, the toxicity of the final effluent was then monitored and found to be nontoxic to ***D. magna.*** The results demonstrated a useful modification in the water treatment practices at Site 2.

Problems Encountered

Site 1

The hypothesis that an unknown toxic component was coming off the cation exchange resin was confirmed when a 300 mg/L NH_4Cl stock solution in well water was passed through the cation column. Toxicity persisted after treatment even though ammonia levels had been reduced to < 1 mg/L, which was well below 32 mg/L (48 hr EC_{50}). No toxicity was observed when well water alone was passed through the resin.

ESC was unable to reduce ammonia below effect levels in the wastewater using air stripping methods. The use of zeolite resins was the only effective means for removing ammonia.

References

Doi, J. and P.R. Grothe. "Use of Fractionation/ Chemical Analysis Schemes for Plant Effluent Toxicity Evaluations." Aquatic Toxicology and Hazard Assessment; Eleventh Symposium, American Society for Testing and Materials, Philadelphia **(1987).**

Rodgers, J.H.,et al. "Toxicity of Calcium to Bioassay Species." Submitted for publication to ***Bulletin of Environmental Contamination and Toxicology*** (1987).

Walsh, G.E. and R.L. Garnas. "Determination of Bioavailability of Chemical Fractions of Liquid Wastes Using Freshwater and Saltwater Algae and Crustaceans." ***Environmental Science Technology,*** 17:180-182 (1983).

☆ U.S. GOVERNMENT PRINTING OFFICE. 1989— 648-163/00310