United States
Environmental Protection
Agency

Environmental Research
Laboratory
Athens GA 30613

EPA/600/3-87/007
May 1987

Research and Development

The Enhanced Stream Water Quality Models QUAL2E and QUAL2E-UNCAS:

Documentation and User Model

EPA/600/3-87/007
May 1987

THE ENHANCED STREAM WATER QUALITY MODELS QUAL2E AND QUAL2E-UNCAS: DOCUMENTATION AND USER MANUAL

by

Linfield C. Brown* and Thomas O. Barnwell, Jr.**

*Department of Civil Engineering
Tufts University
Medford, MA 02155

**Environmental Research Laboratory
U.S. Environmental Protection Agency
Athens, GA 30613

Cooperative Agreement No. 811883

Printed on Recycled Paper

ENVIRONMENTAL RESEARCH LABORATORY
OFFICE OF RESEARCH AND DEVELOPMENT
U.S. ENVIRONMENTAL PROTECTION AGENCY
ATHENS, GEORGIA

DISCLAIMER

The information in this document has been funded wholly or in part by the United States Environmental Protection Agency. It has been subject to the Agency's peer and administrative review, and it has been approved for publication as an EPA document. Mention of trade names or commercial products does not constitute endorsement or recommendation for use by the U.S. Environmental Protection Agency.

FOREWORD

As environmental controls become more costly to implement and the penalties of judgment errors become more severe, environmental quality management requires more efficient management tools based on greater knowledge of the environmental phenomena to be managed. As part of this Laboratory's research on the occurrence, movement, transformation, impact and control of environmental contaminants, the Assessment Branch develops management or engineering tools to help pollution control officials achieve water quality goals.

The stream water quality model QUAL2E is widely used for waste load allocations, discharge permit determinations, and other conventional pollutant evaluations in the United States. Since the introduction of QUAL-II in 1970, several different versions of the model have evolved. This manual presents the most recent modifications in the form of enhanced state-of-the-art models called QUAL2E and QUAL2E-UNCAS. Both models have been developed over the past three years through cooperative agreements between the National Council for Air and Stream Improvement (NCASI), the Department of Civil Engineering at Tufts University, and EPA. Distribution and maintenance of the QUAL2E and QUAL2E-UNCAS computer programs, and training and assistance to model users, will be provided by EPA's Center for Water Quality Modeling at this Laboratory.

Rosemarie C. Russo, Ph.D.
Director
Environmental Research Laboratory
Athens, Georgia

ABSTRACT

This manual is a major revision to the original QUAL2E Program Documentation (EPA/600/3-85/065) released in 1985. It includes a description of the recent modifications and improvements to the widely used water quality models QUAL-II and QUAL2E. The enhancements to QUAL-II that led to QUAL2E incorporated improvements in eight areas: (1) algal, nitrogen, phosphorus, and dissolved oxygen interactions; (2) algal growth rate; (3) temperature; (4) dissolved oxygen; (5) arbitrary non-conservative constituents; (6) hydraulics; (7) downstream boundary concentrations; and (8) input/output modifications. These are fully documented in this manual. The enhancements to QUAL2E, described for the first time in this report, include (1) an extensive capability for uncertainty analysis with the model QUAL2E-UNCAS, (2) an option for reach-variable climatology input for steady state temperature simulation, and (3) an option for plotting observed dissolved oxygen data on the line printer plots of predicted dissolved oxygen concentrations.

QUAL2E, which can be operated either as a steady-state or as a dynamic model, is intended for use as a water quality planning tool. The model can be used, for example, to study the impact of waste loads on instream water quality or to identify the magnitude and quality characteristics of nonpoint waste loads as part of a field sampling program. The user also can model effects of diurnal variations in meteorological data on water quality (primarily dissolved oxygen and temperature) or examine diurnal dissolved oxygen variations caused by algal growth and respiration.

QUAL2E-UNCAS is an enhancement to QUAL2E that allows the user to perform uncertainty analysis. Three uncertainty options are available: sensitivity analysis, first order error analysis, and monte carlo simulation. With this capability, the user can assess the effect of model sensitivities and of uncertain input data on model forecasts.

This report was submitted in partial fulfillment of Cooperative Agreement No. 811883 by Tufts University under the partial sponsorship of the U.S. Environmental Protection Agency. This report covers a period from June 1985 to January 1987, and work was completed as of January 1987.

CONTENTS

	Page
FOREWORD	iii
ABSTRACT	iv
1. INTRODUCTION	1
1.1 QUAL2E Development	2
1.1.1 Current Release	2
1.1.2 History	2
1.1.3 Enhancements to QUAL2E	4
1.1.4 Information Sources	5
1.1.5 Organization of this Report	6
1.2 QUAL2E Computer Model	6
1.2.1 Prototype Representation	6
1.2.2 Model Limitations	7
1.2.3 Model Structure and Subroutines	7
1.2.4 Program Language and Operating Requirements	9
2. GENERAL MODEL FORMULATION	10
2.1 Introduction	10
2.2 Conceptual Representation	11
2.3 Functional Representation	11
2.3.1 Mass Transport Equation	11
2.4 Hydraulic Characteristics	15
2.4.1 Discharge Coefficients	15
2.4.2 Trapezoidal Cross Sections	16
2.4.3 Longitudinal Dispersion	16
2.5 Flow Augmentation	19
3. CONSTITUENT REACTIONS AND INTERRELATIONSHIPS	22
3.1 General Considerations	22
3.2 Chlorophyll a (Phytoplanktonic Algae)	22
3.2.1 Algal Respiration Rate	24
3.2.2 Algal Specific Growth Rate	24
3.2.3 Algal-Light Relationships	26
3.2.4 Algal-Nutrient Relationships	34
3.2.5 Temperature Dependence in Algae Simulation	35
3.3 Nitrogen Cycle	35
3.3.1 Organic Nitrogen	35
3.3.2 Ammonia Nitrogen	36
3.3.3 Nitrite Nitrogen	36
3.3.4 Nitrate Nitrogen	37
3.3.5 Inhibition of Nitrification at Low DO	37

CONTENTS (Cont'd)

Page

3.4 Phosphorus Cycle 38
3.4.1 Organic Phosphorus 38
3.4.2 Dissolved Phosphorus 39
3.5 Carbonaceous BOD 39
3.6 Dissolved Oxygen 40
3.6.1 Dissolved Oxygen Saturation Coefficient 41
3.6.2 Atmospheric Reaeration Coefficient Estimation . . . 42
3.6.3 Ice Cover 48
3.6.4 K_2 Default Values 48
3.6.5 Dam Reaeration 49
3.7 Coliforms 49
3.8 Arbitrary Nonconservative Constituent 50
3.9 Temperature 50
3.10 Temperature Dependence of Rate Coefficients 51
3.11 Reaction Rates and Physical Constants 52

4. FUNCTIONAL REPRESENTATION OF TEMPERATURE 57
4.1 Basic Temperature Equation 57
4.2 Definition of H_N 58
4.3 Net Short-Wave Solar Radiation 60
4.3.1 Extraterrestrial Radiation 61
4.3.2 Radiation Scattering and Absorption 63
4.3.3 Cloudiness 65
4.3.4 Reflectivity 65
4.4 Long-Wave Atmospheric Radiation 66
4.5 Water Surface Back Radiation 66
4.6 Evaporation 67
4.7 Conduction 69
4.8 QUAL2E Modifications for Reach Variable Local Climatology and Temperature 69

5. COMPUTATIONAL REPRESENTATION 71
5.1 Prototype Representation 71
5.2 Forcing Functions 72
5.3 Model Limitations 73
5.4 Numeric Solution Technique 74
5.4.1 Formulation of the Finite Difference Scheme 74
5.4.2 Method of Solution 77
5.4.3 Boundary Conditions 79

CONTENTS (Cont'd)

Page

6. UNCERTAINTY ANALYSIS WITH QUAL2E 81
6.1 Introduction 81
6.2 QUAL2E-UNCAS 81
6.2.1 Sensitivity Analysis 82
6.2.2 First Order Error Analysis 83
6.2.3 Monte Carlo Simulation 84
6.3 Input Variable Variances 85
6.4 Programming Strategy in QUAL2E-UNCAS 87
6.4.1 UNCAS Subroutines 87
6.4.2 Internal UNCAS Data Files 91
6.4.3 User Supplied UNCAS Data Files 91
6.5 Limitations and Constraints for QUAL2E-UNCAS 91

APPENDIX A. QUAL2E USER MANUAL 93
APPENDIX B. QUAL2E-UNCAS USER MANUAL 159
APPENDIX C. QUAL2E-UNCAS EXAMPLE APPLICATION 172
REFERENCES 184

LIST OF FIGURES

No.		Page
I-1	General Structure of QUAL2E	8
II-1	Discretized Stream System	12
II-2	Stream Network of Computational Elements and Reaches	13
III-1	Major Constituent Interactions in QUAL2E	23
III-2	QUAL2E Light Functions	29
IV-1	Heat Transfer Terms Associated with Interfacial Heat Transfer	59
V-1	Classical Implicit Nodal Scheme	74
VI-1	UNCAS Flow Diagram and Program Structure	88

LIST OF TABLES

No.		Page
II-1	Values of Manning's "n" Roughness Coefficient	18
II-2	Experimental Measurements of Longitudinal Dispersion in Open Channels	20
III-1	Comparison of Dissolved Oxygen Saturation Concentrations	43
III-2	Default Temperature Correction Values for QUAL2E	53
III-3	Typical Ranges for QUAL2E Reaction Coefficients	54
IV-1	Definition of Heat Transfer Terms Illustrated in Figure IV-1	60
IV-2	Empirical Coefficients for Determining R_s	65
VI-1	Summary of QUAL2E Input Variable Uncertainties	86

ACKNOWLEDGMENT

Over the years, many investigators have contributed to the development of what has become QUAL2E. The foundation upon which the model has been built was laid by the Texas Water Development Board in the late 1960s in the QUAL-I model. Many versions of the model emerged in the 1970s. The lineage of QUAL2E can be traced to work done for the Southeast Michigan Council of Governments (SEMCOG) by Water Resources Engineers, Inc. (now Camp, Dresser, McKee Inc.). QUAL-II/SEMCOG was chosen for distribution by the Center for Water Quality Modeling (CWQM) in the late 1970s and began to receive wide use in water quality modeling and wasteload allocation programs.

QUAL-II/SEMCOG was throughly reviewed, tested, and documented by the National Council of the Paper Industry for Air and Stream Improvement, Inc. (NCASI), as discussed in NCASI Technical Bulletin No. 391. Changes arising from this review were incorporated in a model called QUAL-II/NCASI, which was adopted for distribution by the Center for Water Quality Modeling. Because of a mutual interest in the program, CWQM partially sponsored an NCASI review of other versions of the QUAL-II computer program and incorporated useful features of these versions in the program called QUAL2E.

Appendix A of this documentation report, the QUAL2E users manual, is modeled after NCASI Technical Bulletin No. 457, "Modifications to the QUAL-2 Water Quality Model and User Manual for QUAL2E Version 2.2." We express our appreciation to NCASI for permission to use and modify this material in this report.

The QUAL2E program also has been made available for IBM PC-compatible microcomputer. The microcomputer installation of this program was performed by Mr. Bruce Bartell and Mr. David Disney of Computer Sciences Corporation, Inc. and was made possible through the support of Mr. King Boynton of the U.S. EPA's Office of Water and through an agreement with the US-Spain Joint Committee for Scientific and Technical Cooperation.

The current release of the program incorporates modifications to the 1985 release to accommodate large elevation differences along a river funded through an agreement with the US-Spain Joint Committee for Scientific and Technical Cooperation. The major extension to the program documented herein, the uncertainty analysis capability, was begun by the first author while on a sabbatical year (1984) from Tufts University at the Athens Environmental Research Laboratory and completed on his return to academic work.

1. INTRODUCTION

QUAL2E is a comprehensive and versatile stream water quality model. It can simulate up to 15 water quality constituents in any combination desired by the user. Constituents which can be simulated are:

1. Dissolved Oxygen
2. Biochemical Oxygen Demand
3. Temperature
4. Algae as Chlorophyll a
5. Organic Nitrogen as N
6. Ammonia as N
7. Nitrite as N
8. Nitrate as N
9. Organic Phosphorus as P
10. Dissolved Phosphorus as P
11. Coliforms
12. Arbitrary Nonconservative Constituent
13. Three Conservative Constituents

The model is applicable to dendritic streams that are well mixed. It assumes that the major transport mechanisms, advection and dispersion, are significant only along the main direction of flow (longitudinal axis of the stream or canal). It allows for multiple waste discharges, withdrawals, tributary flows, and incremental inflow and outflow. It also has the capability to compute required dilution flows for flow augmentation to meet any prespecified dissolved oxygen level.

Hydraulically, QUAL2E is limited to the simulation of time periods during which both the stream flow in river basins and input waste loads are essentially constant. QUAL2E can operate either as a steady-state or as a dynamic model, making it a very helpful water quality planning tool. When operated as a steady-state model, it can be used to study the impact of

waste loads (magnitude, quality and location) on instream water quality and also can be used in conjunction with a field sampling program to identify the magnitude and quality chracteristics of nonpoint source waste loads. By operating the model dynamically, the user can study the effects of diurnal variations in meteorological data on water quality (primarily dissolved oxygen and temperature) and also can study diurnal dissolved oxygen variations due to algal growth and respiration. However, the effects of dynamic forcing functions, such as headwater flows or point loads, cannot be modeled in QUAL2E.

QUAL2E-UNCAS is a recent enhancement to QUAL2E which allows the modeler to perform uncertainty analysis on the steady state water quality simulations. Three uncertainty options are available: sensitivity analysis, first order error analysis, and monte carlo simulations. With this capability, the user can assess the effect of model sensitivities and of uncertain input data on model forecasts. Quantifications of the uncertainty in model forecasts will allow assessment of the risk (probability) of a water quality variable being above or below an acceptable level. The uncertainty methodologies provide the means whereby variance estimates and uncertainty prediction can become as much a part of water quality modeling as estimating expected values is today. An evaluation of the input factors that contribute most to the level of uncertainty will lead modelers in the direction of most efficient data gathering and research. In this manner the modeler can assess the risk of imprecise forecasts, and recommend measures for reducing the magnitude of that imprecision.

1.1 QUAL2E DEVELOPMENT

1.1.1 Current Release

The current release of QUAL2E (Version 3.0) was developed under a cooperative agreement between Tufts University, Department of Civil Engineering and the EPA Center for Water Quality Modeling (CWQM), Environmental Research Laboratory, Athens, GA. It includes modifications to prior releases of QUAL2E (Version 2.2, Brown and Barnwell, 1985) as well as an extensive capability for uncertainty analysis (UNCAS) of its steady state simulation output. This release of QUAL2E and its companion program for uncertainty analysis, QUAL2E-UNCAS, is intended to supercede all prior releases of QUAL2E and QUAL-II.

1.1.2 History

The original QUAL-II model was an extension of the stream water quality model QUAL-I developed by F. D. Masch and Associates and the Texas Water Development Board (1971) and the Texas Water Development Board (1970). In 1972, Water Resources Engineers, Inc. (WRE) under contract to the U.S. Environmental Protection Agency, modified and extended QUAL-I to produce the first version of QUAL-II. Over the next 3 years, several different versions of the model evolved in response to specific user needs. In March 1976, the Southeast Michigan Council of Governments (SEMCOG) contracted with WRE to make further modifications and to combine the best features of the existing

versions of QUAL-II into a single model. The significant modifications made in the SEMCOG version by WRE (Roesner et al., 1981a and b) were:

- Option of English or metric units on input data
- Option for English or metric output--choice is independent of input units
- Option to specify channel hydraulic properties in terms of trapezoidal channels or stage-discharge and velocity-discharge curves
- Option to use Tsivoglou's computational method for stream reaeration
- Improvement in output display routines
- Improvement in steady-state temperature computation routines

The SEMCOG version of QUAL-II was later reviewed, documented, and revised (NCASI, 1982). The revised SEMCOG version has since been maintained and supported by the EPA Center for Water Quality Modeling (CWQM). In 1983, EPA, through the CWQM, contracted with NCASI to continue the process of modifying QUAL-II to reflect state-of-the-art water quality modeling. Extensive use of QUAL-II/SEMCOG had uncovered difficulties that required corrections in the algal-nutrient-light interactions. In addition, a number of modifications to the program input and output had been suggested by users. The enhanced QUAL-II model was renamed QUAL2E (Brown and Barnwell, 1985) and incorporated improvements in eight areas. These enhancements are fully documented in this report and summarized as follows:

1. Algal, nitrogen, phosphorus, dissolved oxygen interactions
   - Organic nitrogen state variable
   - Organic phosphorus state variable
   - Nitrification inhibition at low DO
   - Algal preference factor for NH_3
2. Algal growth rate
   - Growth rate dependent upon both NH_3 and NO_3 concentrations
   - Algal self-shading
   - Three light functions for growth rate attenuation
   - Three growth rate attenuation options
   - Four diurnal averaging options for light
3. Temperature
   - Link to algal growth via solar radiation
   - Default temperature correction factors
4. Dissolved Oxygen (DO)
   - 16th Edition Standard Methods DO saturation function

- Traditional SOD units (g/m^2-day or g/ft^2-day)
- Dam reaeration option

5. Arbitrary non-conservative constituent

   - First order decay
   - Removal (settling) term
   - Benthal source term

6. Hydraulics

   - Input factor for longitudinal dispersion
   - Test for negative flow (i.e., withdrawal greater than flow)
   - Capability for incremental outflow along reach

7. Downstream boundary

   - Option for specifying downstream boundary water quality constituent concentrations

8. Input/output modifications

   - Detailed summary of hydraulic calculations
   - New coding forms
   - Local climatological data echo printed
   - Enhanced steady-state convergence
   - Five part final summary including components of DO deficit and plot of DO and BOD

1.1.3 Enhancements to QUAL2E

Since the first release of QUAL2E in 1985, enhancements to the model have continued. The modifications, listed below, are designed to improve the computational efficiency of the code, as well as to assist the user in model calibration and verification. The reach variable climatology modifications were added in response to applications of QUAL2E to the river network in Madrid, Spain. In that system, large changes in elevation presented difficulties in calibrating QUAL2E for temperature and dissolved oxygen. The major addition to the current release of QUAL2E is the uncertainty analysis capability. Inclusion of this feature resulted from a project which investigated various methodologies for incorporating uncertainty analysis as an integral part of the water quality modeling process. The QUAL2E model was chosen for this application because it is a general purpose computer code, widely used by consultants and state regulatory agencies in waste load allocation and other planning activities.

Enhancements to QUAL2E in the current release include:

1. Option for reach variable climatology input for steady state temperature simulation.

2. Option for including observed dissolved oxygen data on the line printer plots of predicted dissolved oxygen concentrations.

3. Changing the steady state convergence criterion for algal, nitrification, and dissolved oxygen simulations from an absolute error to a relative error.

4. Updating the formulation for estimating reaeration effects of water flowing over a dam.

Capabilities of the uncertainty analysis model, QUAL2E-UNCAS, include the following:

1. Sensitivity analysis--with an option for factorially designed combinations of input variable perturbations.

2. First order error analysis--with output consisting of a normalized sensitivity coefficient matrix, and a components of variance matrix.

3. Monte carlo simulation--with summary statistics and frequency distributions of the output variables.

1.1.4 Information Sources

Major sources of information for this revised documentation are:

1. Roesner, L. A., Giguere, P. R. and Evenson, D. E. Computer Program Documentation for Stream Quality Modeling (QUAL-II). U.S. Environmental Protection Athens, GA. EPA-600/9-81-014, February 1981.

2. JRB Associates. Users Manual for Vermont QUAL-II Model. Prepared for U.S. Environmental Protection Agency, Washington, DC. June 1983.

3. National Council for Air and Stream Improvement. A Review of the Mathematical Water Quality Model QUAL-II and Guidance for its Use, NCASI, New York, NY, Technical Bulletin No. 391, December 1982.

4. Brown, L. C. and T. O. Barnwell, Jr., Computer Program Documentation for the Enhanced Stream Water Quality Model QUAL2E, U.S. Environmental Protection Agency, Environmental Research Laboratory, Athens, GA, EPA/600-3-85/065, August 1985.

This documentation of QUAL2E updates the report distributed with the prior version of the model (Brown and Barnwell, 1985) and consolidates material from these and other sources into a single volume. The basic

theory and mechanics behind the development of QUAL2E are described in this volume. The two appendices contain user manuals for QUAL2E and QUAL2E-UNCAS and provide a detailed description of input data requirements, as well as sample input coding forms. This report, a copy of the QUAL2E and QUAL2E-UNCAS computer code, and sample input/output data files are available from the Center for Water Quality Modeling, U.S. Environmental Protection Agency, Environmental Research Laboratory, Athens, GA 30613.

1.1.5 Organization of this Report

The general program structure, specifications, and limitations of QUAL2E are discussed in the remainder of this chapter. Chapter 2 describes the conceptual and functional representation of QUAL2E as well as the hydraulic characteristics of the model. The mathematical basis of the water quality constituent formulations is presented in Chapter 3. Chapter 4 presents the framework for modeling temperature. With the exception of Section 4.8, it is extracted essentially verbatim from Roesner et al., 1981. Chapter 5 describes the computational representation of the model and the numerical solution algorithm.

The uncertainty analysis capabilities of QUAL2E-UNCAS are documented in Chapter 6.

Appendix A contains a user manual complete with revised input coding forms for the current release (Version 3.0) of QUAL2E. Appendix B is the user manual for QUAL2E-UNCAS. Appendix C describes an example application of QUAL2E-UNCAS.

For the convenience of the majority of users, all of the units specifications are given in the English system of measurement. QUAL2E, however, will recognize either English or metric units.

1.2 QUAL2E COMPUTER MODEL

1.2.1 Prototype Representation

QUAL2E permits simulation of any branching, one-dimensional stream system. The first step in modeling a system is to subdivide the stream system into reaches, which are stretches of stream that have uniform hydraulic characteristics. Each reach is then divided into computational elements of equal length. Thus, all reaches must consist of an integer number of computational elements.

There are seven different types of computational elements:

1. Headwater element
2. Standard element
3. Element just upstream from a junction

4. Junction element

5. Last element in system

6. Input element

7. Withdrawal element

Headwater elements begin every tributary as well as the main river system, and as such, they must always be the first element in a headwater reach. A standard element is one that does not qualify as one of the remaining six element types. Because incremental flow is permitted in all element types, the only input permitted in a standard element is incremental flow. A type 3 element is used to designate an element on the main stem just upstream of a junction. A junction element (type 4) has a simulated tributary entering it. Element type 5 identifies the last computational element in the river system; there should be only one type 5 element. Element types 6 and 7 represent inputs (waste loads and unsimulated tributaries) and water withdrawals, respectively. River reaches, which are aggregates of computational elements, are the basis of most data input. Hydraulic data, reaction rate coefficients, initial conditions, and incremental flows data are constant for all computational elements within a reach.

1.2.2 Model Limitations

QUAL2E has been designed to be a relatively general program; however, certain dimensional limitations have been imposed during program development. These limitations are:

- Reaches: a maximum of 25
- Computational elements: no more than 20 per reach or a total of 250
- Headwater elements: a maximum of 7
- Junction elements: a maximum of 6
- Input and withdrawal elements: a maximum of 25

QUAL2E incorporates features of ANSI FORTRAN 77 that allow these limitations to be easily changed.

1.2.3 Model Structure and Subroutines

QUAL2E is structured as one main program supported by 51 different subroutines. Figure I-1 illustrates the functional relationships between the main program and the subroutines. New state variables can be added or modifications to existing relationships can be made with a minimum of model restructuring through the simple addition of appropriate subroutines.

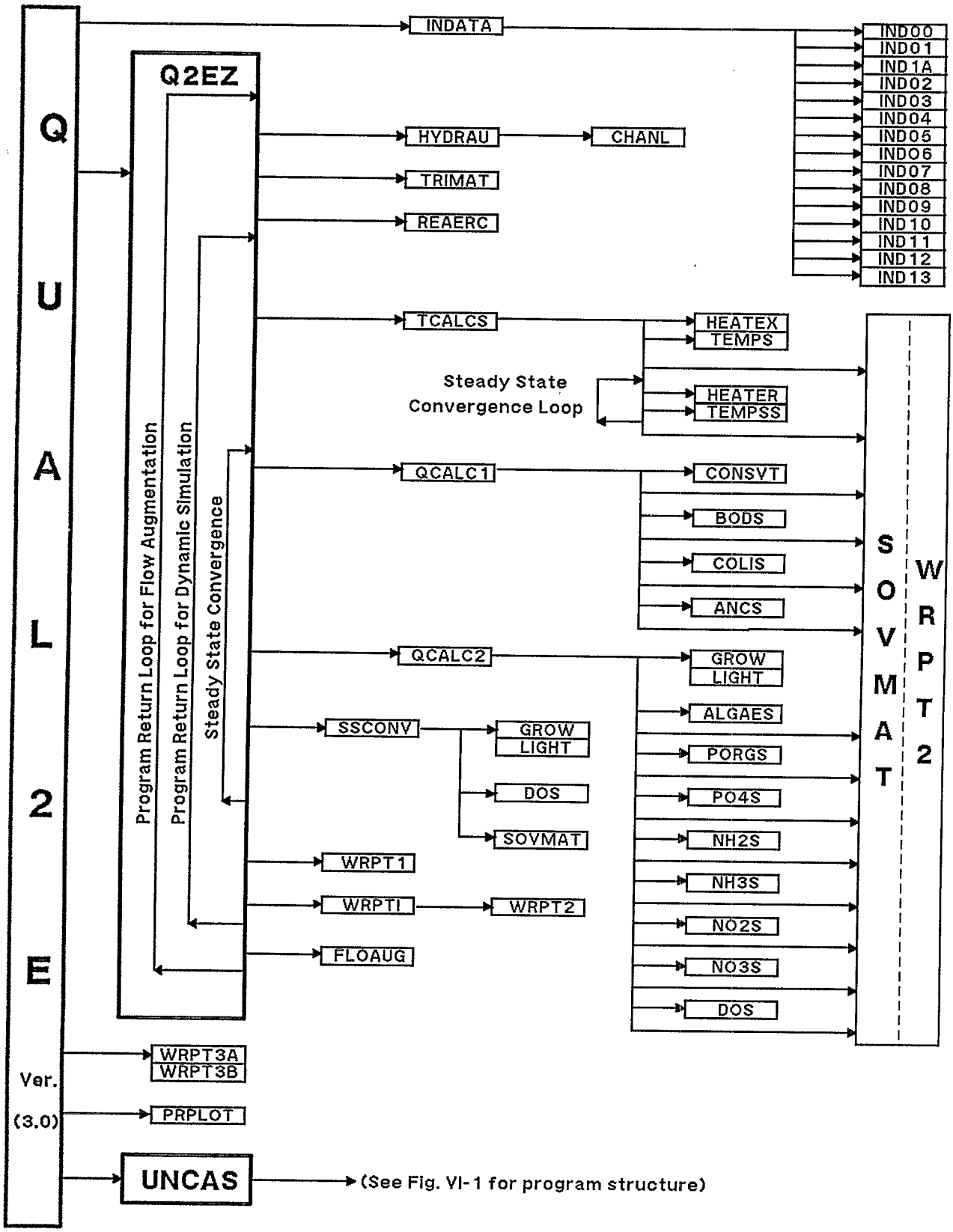

Figure I-1 General Structure of QUAL2E

The structural framework of QUAL2E has been modified from prior versions of QUAL-II. The large MAIN program and subroutine INDATA have been divided into smaller groups of subroutines, each with a more narrowly defined task. The new subroutines in QUAL2E include the algal light functions (GROW/LIGHT), the steady state algal output summary (WRPT1), the organic nitrogen and phosphorus state variables (NH2S, PORG), and the line printer plot routine (PRPLOT). This reorganization of QUAL2E into smaller programmatic units is the first step in adapting the model to micro and minicomputers that have limited memory.

QUAL2E Version 3.0 retains this modular program structure. QUAL2E may be obtained with or without the UNCAS capability. The program structure and subroutine descriptions for UNCAS are described in Chapter 6 of this report.

1.2.4 Program Language and Operating Requirements

QUAL2E is written in ANSI FORTRAN 77 and is compatible with mainframe and personal computer systems that support this language. QUAL2E typically requires 256K bytes of memory and uses a single system input device (cards or disk file) and the system's line printer (or disk file) as the output device.

If the system's normal FORTRAN input device unit is not unit 1 or the output unit is not unit 7, then the variables "NI" and "NJ" in the main program (files Q2E3PØ or Q2U3PØ) should be changed to reflect the system's I/O unit identifiers.

2. GENERAL MODEL FORMULATION

2.1 INTRODUCTION

The primary objective of any stream water quality model development is to produce a tool that has the capability for simulating the behavior of the hydrologic and water quality components of a stream system. The development of this tool to simulate prototype behavior by applying a mathematical model on a digital computer proceeds through three general phases (Water Resources Engineers, Inc., 1967):

1. Conceptual representation
2. Functional representation
3. Computational representation

Conceptual representation involves a graphic idealization of the prototype by description of the geometric properties that are to be modeled and by identification of boundary conditions and interrelationships between various parts of the prototype. Usually, this process entails dividing the prototype into discrete "elements" of a size compatible with the objectives that the model must serve, defining these elements according to some simple geometric rules, and designating the mode by which they are connected, either physically or functionally, as integral parts of the whole. A part of this conceptual structuring is the designation of those boundary conditions to be considered in the simulation.

Functional representation entails formulation of the physical features, processes, and boundary conditions into sets of algebraic equations. It involves precise definition of each variable and its relationship to all other parameters that characterize the model or its input-output relationships.

Computational representation is the process whereby the functional model is translated into the mathematical forms and computational procedures required for solution of the problem over the desired time and space continuum. It is concerned with development of a specific solution technique that can be accommodated by the computer and with codification of the technique in computer language.

In the remainder of this section the Conceptual Representation of QUAL2E will be described together with its general functional representation for mass transport, hydraulic characteristics, and longitudinal dispersion.

Chapter 3 will discuss specific constituent reactions and interactions. Chapter 4 will develop the functional representation of stream temperature as simulated in QUAL2E.

2.2 CONCEPTUAL REPRESENTATION

Figure II-1 shows a stream reach (n) that has been divided into a number of subreaches or computational elements, each of length Δx. For each of these computational elements, the hydrologic balance can be written in terms of flows into the upstream face of the element (Q_{i-1}), external sources or withdrawals (Qx_i), and the outflow (Q_i) through the downstream face of the element. Similarly, a materials balance for any constituent C can be written for the element. In the materials balance, we consider both transport ($Q \cdot C$) and dispersion ($A \frac{D_L}{\Delta x} \frac{\partial C}{\partial x}$) as the movers of mass along the stream axis. Mass can be added to or removed from the system via external sources and withdrawals $(QxCx)_i$ and added or removed via internal sources or sinks (S_i) such as benthic sources and biological transformation. Each computational element is considered to be completely mixed.

Thus, the stream can be conceptualized as a string of completely mixed reactors--computational elements--that are linked sequentially to one another via the mechanisms of transport and dispersion. Sequential groups of these reactors can be defined as reaches in which the computational elements have the same hydrogeometric properties--stream slope, channel cross section, roughness, etc.--and biological rate constants--BOD decay rate, benthic source rates, algae settling rates, etc.--so that the stream shown at the left of Figure II-2 can be conceptually represented by the grouping of reaches and computational elements shown on the right of Figure II-2.

2.3 FUNCTIONAL REPRESENTATION

2.3.1 Mass Transport Equation

The basic equation solved by QUAL2E is the one dimensional advection-dispersion mass transport equation, which is numerically integrated over space and time for each water quality constituent. This equation includes the effects of advection, dispersion, dilution, constituent reactions and interactions, and sources and sinks. For any constituent, C, this equation can be written as:

$$\frac{\partial M}{\partial t} = \frac{\partial (A_x D_L \frac{\partial C}{\partial x})}{\partial x} dx - \frac{\partial (A_x \bar{u} C)}{\partial x} dx + (A_x dx) \frac{dC}{dt} + s \qquad \text{II-1}$$

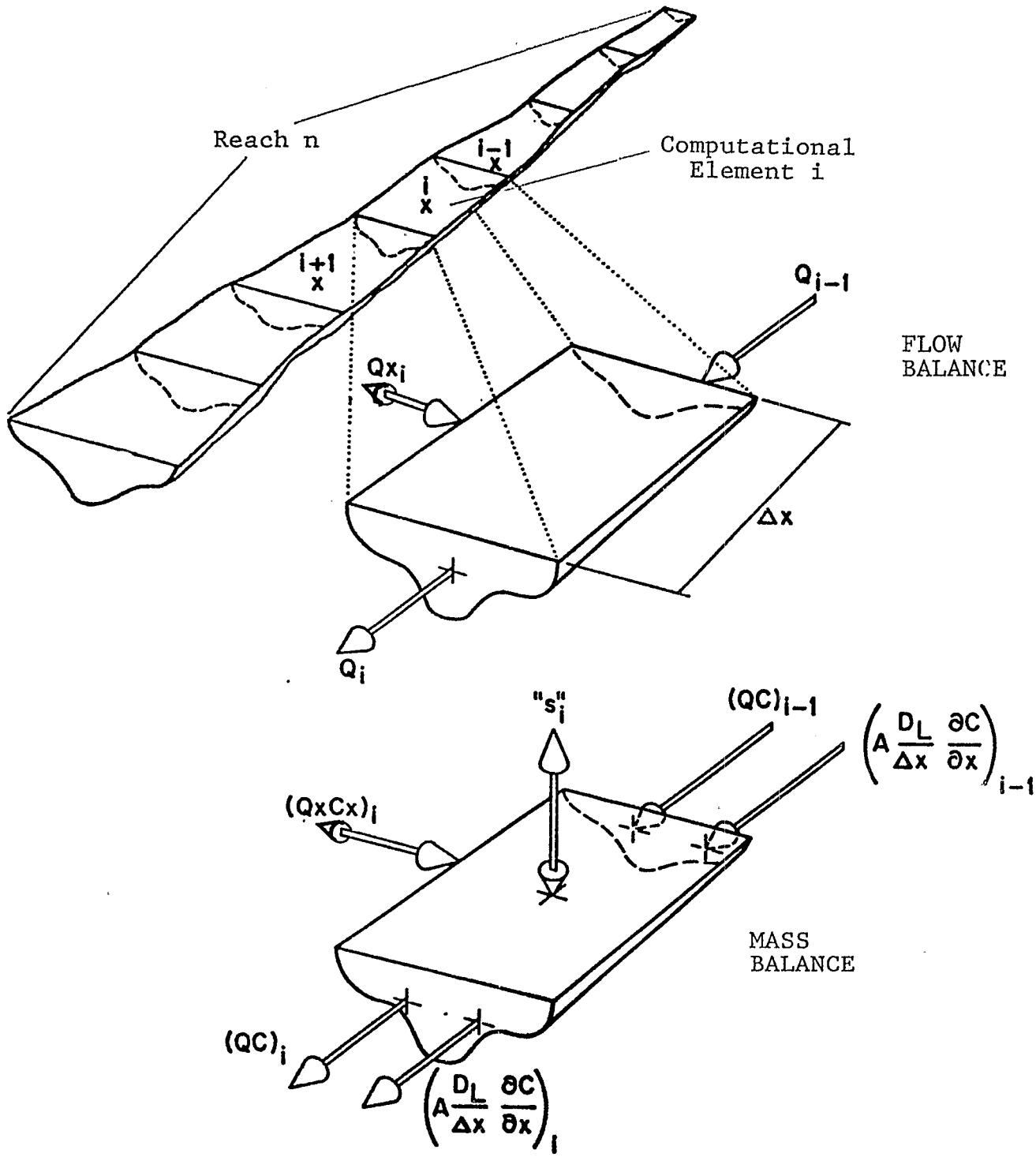

Figure II-1. Discretized Stream System

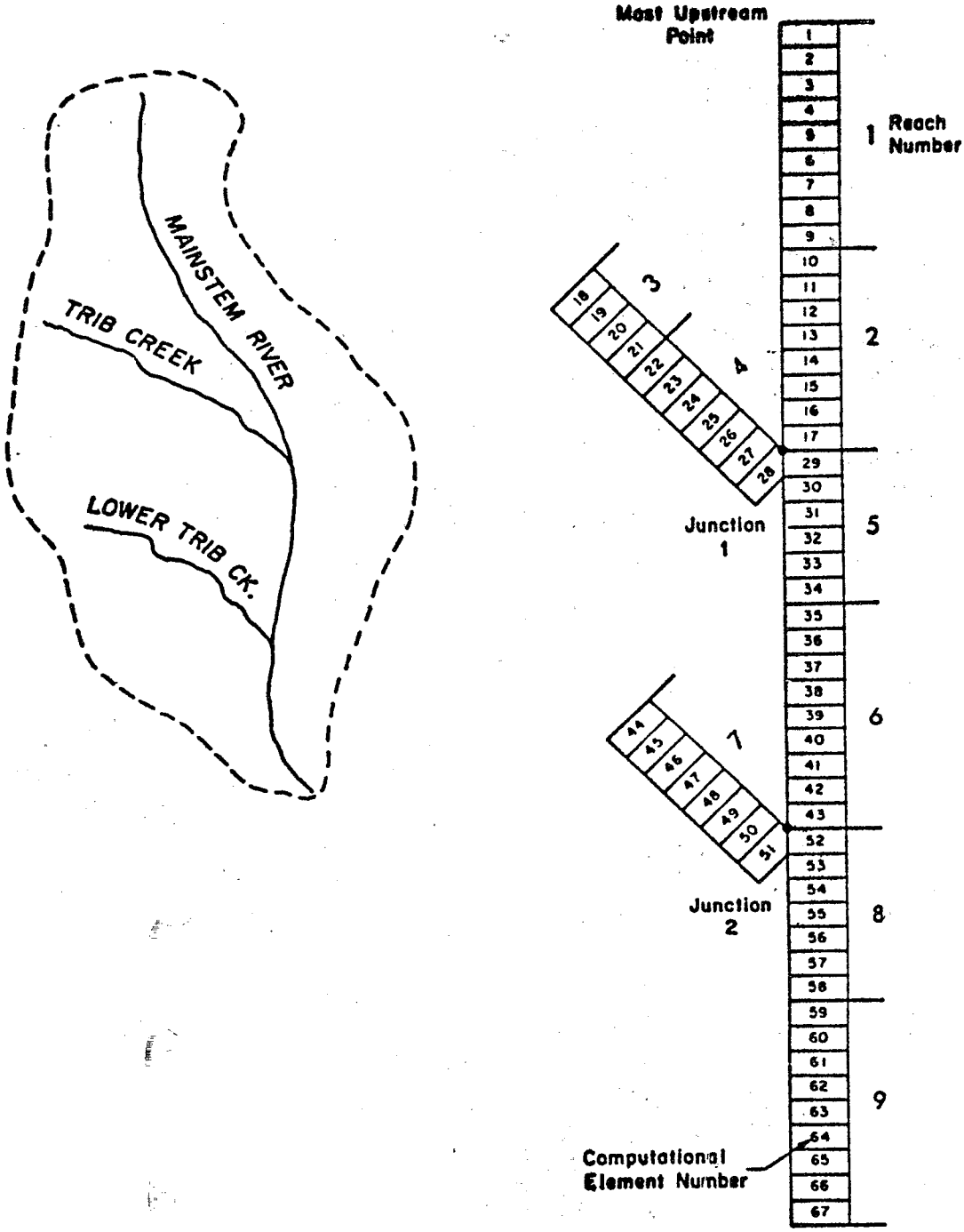

Figure II-2. Stream Network of Computational Elements and Reaches

where

M = mass (M)

x = distance (L)

t = time (T)

C = concentration ($M\ L^{-3}$)

A_x = cross-sectional area (L^2)

D_L = dispersion coefficient ($L^2\ T^{-1}$)

$\overline{u}$ = mean velocity ($L\ T^{-1}$)

s = external source or sinks ($M\ T^{-1}$)

Because $M = VC$, we can write

$$\frac{\partial M}{\partial t} = \frac{\partial (VC)}{\partial t} = V \frac{\partial C}{\partial t} + C \frac{\partial V}{\partial t} \qquad \text{II-2a}$$

where

$V = A_x\ dx$ = incremental volume (L^3)

If we assume that the flow in the stream is steady, i.e., $\partial Q/\partial t = 0$, then the term $\partial V/\partial t = 0$ and equation II-2a becomes

$$\frac{\partial M}{\partial t} = V \frac{\partial C}{\partial t} \qquad \text{II-2b}$$

Combining equations II-1 and II-2b and rearranging,

$$\frac{\partial C}{\partial t} = \frac{\partial (A_x D_L \frac{\partial C}{\partial x})}{A_x\ \partial x} - \frac{\partial (A_x\ \overline{u}\ C)}{A_x\ \partial x} \frac{dC}{dt} + \frac{s}{V} \qquad \text{II-3}$$

The terms on the right-hand side of the equation represent, respectively, dispersion, advection, constituent changes, external sources/sinks, and dilution. The $\frac{dC}{dt}$ term refers only to constituent changes such as growth and decay, and should not be confused with the term $\frac{\partial C}{\partial t}$, the local concentration gradient. The latter term includes the effect of constituent changes as well as dispersion, advection, sources/sinks, and dilutions.

Under steady-state conditions, the local derivative becomes equal to zero; in other words:

$$\frac{\partial C}{\partial t} = 0 \qquad \text{II-4}$$

Changes that occur to individual constituents or particles independent of advection, dispersion, and waste inputs are defined by the term

$$\frac{dC}{dt} = \text{individual constituents changes} \qquad \text{II-5}$$

These changes include the physical, chemical, and biological reactions and interactions that occur in the stream. Examples of these changes are reaeration, algal respiration and photosynthesis, and coliform die-off.

2.4 HYDRAULIC CHARACTERISTICS

QUAL2E assumes that the stream hydraulic regime is steady-state; i.e., $\partial Q/\partial t = 0$, therefore, the hydrologic balance for a computational element can be written simply as (see Figure II-1):

$$\left(\frac{\partial Q}{\partial x}\right)_i = (Q_x)_i \qquad \text{II-6}$$

where $(Q_x)_i$ is the sum of the external inflows and/or withdrawals to that element.

2.4.1 Discharge Coefficients

Once equation II-6 has been solved for Q, the other hydraulic characteristics of the stream segments can be determined by equations of the form:

$$\overline{u} = aQ^b \qquad \text{II-7}$$

$$A_x = Q/\overline{u} \qquad \text{II-8}$$

and

$$d = \alpha Q^\beta \qquad \text{II-9}$$

where a, b, α and β are empirical constants, and d is the stream depth. These constants usually can be determined from stage-discharge rating curves.

2.4.2 Trapezoidal Cross Sections

Alternatively, if the cross-sectional properties of the stream segment are available as a function of the depth d, u can be obtained as a function of discharge by the trial and error solution of Mannings equation:

$$Q = \frac{1.486}{n} A_x R_x^{2/3} S_e^{1/2} \qquad \text{II-10}$$

where

A_x = cross-section area of the channel or canal, ft^2

R_x = mean effective hydraulic radius, ft

n = Manning roughness factor (usual range 0.010 to 0.10)

S_e = slope of the energy grade line (dimensionless)

Q = discharge, ft^3/sec

The value for $\overline{u}$ is then determined from equation II-8.

2.4.3 Longitudinal Dispersion

Dispersion is basically a convective transport mechanism. The term "dispersion" is generally used for transport associated with spatially averaged velocity variation, as opposed to "diffusion," which is reserved for transport that is associated primarily with time-averaged velocity fluctuations.

Taylor (1956) derived a predictive equation for the longitudinal dispersion coefficient, D_L, in long straight pipes, as

$$D_L = 10\, r_o\, u^*, \quad ft^2/sec \qquad \text{II-11}$$

where r_o is the pipe radius and u* is the average shear velocity defined as

$$u^* = \sqrt{\tau_o/\rho}, \quad ft/sec \qquad \text{II-12}$$

where

τ_o = boundary shear stress, lb/ft^2, and

ρ = mass fluid density, $lb\text{-}sec^2/ft^4$

Some investigators have attempted to apply Taylor's expression to streamflow. Such applications are only approximate, however, because of the difference between the geometry or velocity distributions in streamflow and those in a pipe.

Elder (1959) assumed that only the vertical velocity gradient was important in streamflow and developed an expression analogous to Taylor's expression:

$$D_L = Kdu^* \qquad \text{II-13}$$

where d is the mean depth in feet of the stream. Elder used a value of 5.93 for K in this equation.

Other investigators have derived similar expressions for D_L and found it to be extremely sensitive to lateral velocity profiles. Elder's expression, however, seems adequate in one-dimensional situations where the channel is not too wide. For very wide channels, Fisher (1964) has shown that half-width rather than depth is the dominant scale and therefore is important to the definition of the longitudinal dispersion coefficient. Equations II-11 and II-13 can be written in terms of the Manning Equation and other variables characteristic of stream channels.

As an example, for steady-state open-channel flow.

$$u^* = C\sqrt{RS_e} \qquad \text{II-14}$$

where

C = Chezy's coefficient

R = the hydraulic radius

S_e = the slope of the energy grade line

Chezy's coefficient is given by:

$$C = \frac{R^{1/6}}{n} \qquad \text{II-15}$$

where n is the Manning roughness coefficient tabulated for different types of channels in Table II-1.

S_e, the slope of the energy gradient, is given by

$$S_e = \left(\frac{\bar{u}\, n}{1.486\, R^{2/3}}\right)^2 \qquad \text{II-16}$$

where $\bar{u}$ is the mean velocity. Substituting equations II-14, II-15 and II-16 into equation II-13 and letting R = d for a wide channel yields the expression

$$D_L = 3.82\, K\, n\, \bar{u}\, d^{5/6} \qquad \text{II-17}$$

TABLE II-1

VALUES OF MANNING'S "n" ROUGHNESS COEFFICIENT

After Henderson (1966)

Artificial Channels	n
Glass, plastic, machined metal	0.010
Dressed timber, joints flush	0.011
Sawn timber, joints uneven	0.014
Cement plaster	0.011
Concrete, steel troweled	0.012
Concrete, timber forms, unfinished	0.014
Untreated gunite	0.015-0.017
Brickwork or dressed masonry	0.014
Rubble set in cement	0.017
Earth, smooth, no weeds	0.020
Earth, some stones, and weeds	0.025
Natural River Channels	**n**
Clean and straight	0.025-0.030
Winding with pools and shoals	0.033-0.040
Very weedy, winding and overgrown	0.075-0.150
Clean straight alluvial channels	$0.031\ d^{1/6}$ (d = D-75 size in ft. = diameter that 75 percent of particles are smaller than)

where

D_L = longitudinal dispersion coefficient, ft^2/sec

K = dispersion constant (dimensionless)

n = Manning's roughness coefficient (dimensionless)

$\overline{u}$ = mean velocity, ft/sec

d = mean depth, ft

Typical values for dispersion coefficients, D_L, and values of the dispersion constant, K, cited by Fisher et al. (1979), are given in Table II-2. Note that the dispersion constant, K, shown in this table is one to three orders of magnitude greater than that used by Elder.

2.5 Flow Augmentation

When the DO concentration in a stream drops below some required target level, such as the state water quality standard for DO, it may be desirable to raise this DO concentration by augmenting the flow of the stream. According to the originators of the flow augmentation routine in QUAL2E, Frank D. Masch and Associates and the Texas Water Development Board (1971), the amount of flow necessary to bring the DO concentrations up to required standards cannot be calculated by an exact functional relationship. A good approximation of the relationship is used in QUAL2E and has the following quadratic form:

$$DO_R = DO_T - DO_{min} \qquad \text{II-18}$$

and

$$Q_R = Q_C\left[\frac{DO_R}{DO_T} + 0.15\left(\frac{DO_R}{DO_T}\right)^2\right] \qquad \text{II-19}$$

where,

DO_R = dissolved xoygen concentration required to meet target conditions, mg/L

DO_T = required target level of DO, mg/L

DO_{min} = minimum DO concentration (critical level) in the oxygen sag curve, mg/L

Q_R = amount of flow augmentation required, ft^3/sec

Q_C = flow at the critical point in the oxygen sag curve, ft^3/sec

TABLE II-2

EXPERIMENTAL MEASUREMENTS OF LONGITUDINAL DISPERSION IN OPEN CHANNELS

(After Table 5.3, Fisher et al., 1979)

Channel	Depth d (ft)	Width W (ft)	Mean Velocity $\bar{u}$ (ft/sec)	Shear Velocity u* (ft/sec)	Dispersion Coefficient D_L (ft^2/sec)	Dispersion Constant K
Chicago Ship Channel	26.5	160	0.89	0.063	32	20
Sacramento River	13.1	--	1.74	0.17	161	74
River Derwent	0.82	--	1.25	0.46	50	131
South Platte River	1.5	--	2.17	0.23	174	510
Yuma Mesa A Canal	11.3	--	2.23	1.13	8.2	8.6
Trapezoidal Laboratory Channel with roughened sides	0.115	1.31	0.82	0.066	1.3	174
	0.154	1.41	1.48	0.118	2.7	150
	0.115	1.31	1.48	0.115	4.5	338
	0.115	1.12	1.44	0.114	0.8	205
	0.069	1.08	1.48	0.108	4.3	392
	0.069	0.62	1.51	0.127	2.4	270
Green-Duwamish River	3.61	66	--	0.16	70-92	120-160
Missouri River	8.86	660	5.09	0.24	16,000	7500
Copper Creek (below gage)	1.61	52	0.89	0.26	215	500
	2.79	59	1.97	0.33	226	250
	1.61	52	0.85	0.26	102	245
Clinch River	2.79	154	1.05	022	151	235
	6.89	197	3.08	034	581	245
	6.89	174	2.62	0.35	506	210
Copper Creek (above gage)	1.31	62	0.52	0.38	97	220
Powell River	2.79	112	0.49	0.18	102	200
Clinch River	1.90	118	0.69	0.16	87	280
Coachella Canal	5.12	79	2.33	0.14	103	140
Bayon Anacoco	3.08	85	1.12	0.22	355	524
	2.98	121	1.31	0.22	420	640
Nooksack River	2.49	210	2.20	0.89	377	170
Wind/Bighorn Rivers	3.61	194	2.89	0.39	452	318
	7.09	226	5.09	0.56	1722	436
John Day River	1.90	82	3.31	0.46	151	172
	8.10	112	2.69	0.59	700	146

TABLE II-2

EXPERIMENTAL MEASUREMENTS OF LONGITUDINAL DISPERSION IN OPEN CHANNELS

(After Table 5.3, Fisher et al., 1979) (Continued)

Channel	Depth d (ft)	Width W (ft)	Mean Velocity $\bar{u}$ (ft/sec)	Shear Velocity u* (ft/sec)	Dispersion Coefficient D_L (ft^2/sec)	Dispersion Constant K
Comite River	1.41	52	1.21	0.16	151	650
Sabine River	6.69	341	1.90	0.16	3390	3100
	15.6	417	2.10	0.26	7200	1800
Yadkin River	7.71	230	1.41	0.33	1200	470
	12.6	236	2.49	0.43	2800	520

The model augments the stream flow by first comparing, after steady-state conditions have been reached, the simulated DO concentration with the prespecified target level of DO in each reach. If the calculated DO is below the target level, the program finds those upstream sources that the user has specified for dilution purposes, and adds water equally from all these sources. The DO calculations are then repeated. This process continues until the DO target level is satisfied. (NOTE: The flow augmentation subroutine can be used for DO only.)

3. CONSTITUENT REACTIONS AND INTERRELATIONSHIPS

3.1 GENERAL CONSIDERATIONS

One of the most important considerations in determining the waste-assimilative capacity of a stream is its ability to maintain an adequate dissolved oxygen concentration. Dissolved oxygen concentrations in streams are controlled by atmospheric reaeration, photosynthesis, plant and animal respiration, benthal demand, biochemical oxygen demand, nitrification, salinity, and temperature, among other factors.

The most accurate oxygen balance would consider all significant factors. The QUAL2E model includes the major interactions of the nutrient cycles, algae production, benthic oxygen demand, carbonaceous oxygen uptake, atmospheric aeration and their effect on the behavior of dissolved oxygen. Figure III-1 illustrates the conceptualization of these interactions. The arrows on the figure indicate the direction of normal system progression in a moderately polluted environment; the directions may be reversed in some circumstances for some constituents. For example, under conditions of oxygen supersaturation, which might occur as a result of algal photosynthesis, oxygen might be driven from solution, opposite to the indicated direction of the flow path.

Coliforms and the arbitrary nonconservative constituent are modeled as nonconservative decaying constituents and do not interact with other constituents. The conservative constituents, of course, neither decay nor interact in any way with other constituents.

The mathematical relationships that describe the individual reactions and interactions are presented in the following paragraphs.

3.2 CHLOROPHYLL a (PHYTOPLANKTONIC ALGAE)

Chlorophyll a is considered to be directly proportional to the concentration of phytoplanktonic algal biomass. For the purposes of this model algal biomass is converted to chlorophyll a by the simple relationship:

$$\text{Chl}\underline{a} = \alpha_0 A \qquad \text{III-1}$$

where

Chl<u>a</u> = chlorophyll <u>a</u> concentration, ug-Chl<u>a</u>/L

A = algal biomass concentration, mg-A/L

α_0 = a conversion factor, ug Chl<u>a</u>/mg A

The differential equation that governs the growth and production of algae (chlorophyll <u>a</u>) is formulated according to the following relationship.

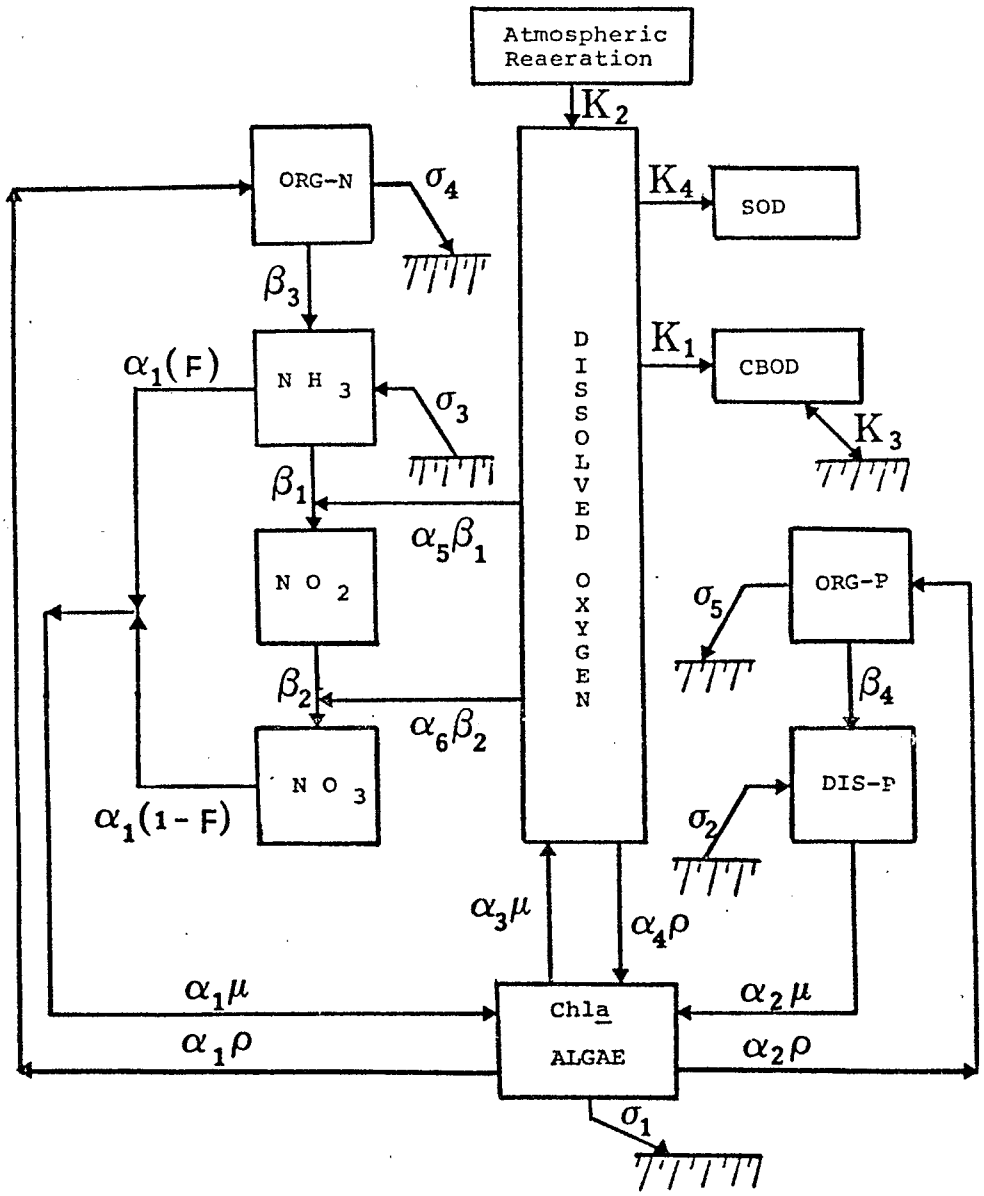

Figure III-1. Major Constituent Interactions in QUAL2E

$$\frac{dA}{dt} = \mu A - \rho A - \frac{\sigma_1}{d} A \qquad \text{III-2}$$

where

A = algal biomass concentration, mg-A/L

t = time, day

μ = the local specific growth rate of algae as defined below, which is temperature dependent, day^{-1}

ρ = the local respiration rate of algae, which is temperature dependent, day^{-1}

σ_1 = the local settling rate for algae, which is temperature dependent, ft/day

d = average depth, ft

3.2.1 Algal Respiration Rate

In QUAL2E, the single respiration rate parameter, ρ, is used to approximate three processes: (a) the endogenous respiration of algae, (b) the conversion of algal phosphorus to organic phosphorus, and (C) the conversion of algal nitrogen to organic nitrogen. No attempt is made to use separate rate coefficients for these three processes, as is done in the State of Vermont, revised Meta Systems version of QUAL-II (JRB Associates, 1983; and Walker, 1981).

3.2.2 Algal Specific Growth Rate

The local specific growth rate of algae, μ, is known to be coupled to the availability of required nutrients (nitrogen and phosphorus) and light. A variety of mathematical expressions for expressing multiple nutrient-light limitations on algal growth rate have been reported (De Groot, 1983; Scavia and Park, 1976; and Swartzman and Bentley, 1979). QUAL2E has the capability of modeling the interaction among these limiting factors in three different ways.

Growth Rate Option 1. Multiplicative. The kinetic expressions used to represent the effects of nitrogen, phosphorus, and light are multiplied together to determine their net effect on the local algal growth rate. This option has as its biological basis the multiplicative effects of enzymatic processes involved in photosynthesis:

$$\mu = \mu_{max} \, (FL) \, (FN) \, (FP) \qquad \text{III-3a}$$

where

μ_{max} = maximum specific algal growth rate, day^{-1}

FL = algal growth limitation factor for light

FN = algal growth limitation factor for nitrogen

FP = algal growth limitation factor for phosphorus

This formulation is used in the SEMCOG version of QUAL-II.

Growth Rate Option 2. Limiting Nutrient. This option represents the local algal growth rate as limited by light and either nitrogen or phosphorus, but not both. Thus, the nutrient/light effects are multiplicative, but the nutrient/nutrient effects are alternate. This formulation mimics Liebig's law of the minimum:

$$\mu = \mu_{max} \text{ (FL) Min (FN,FP)} \qquad \text{III-3b}$$

Thus, the algal growth rate is controlled by the nutrient (N or P) with the smaller growth limitation factor. This option is used in the State of Vermont version of QUAL-II.

Growth Rate Option 3. Harmonic Mean. This option, a compromise between options 1 and 2, is a modification of an intuitive form suggested by Scavia and Park (1976) and is mathematically analogous to the total resistance of two resistors in parallel. In this option, an effective nutrient limitation factor is computed as the average of the inverse reciprocals of the individual nitrogen and phosphorus growth limitation factors, i.e.,

$$\mu = \mu_{max} \text{ (FL)} \left[\frac{2}{1/FN + 1/FP}\right] \qquad \text{III-3c}$$

Thus, the algal growth rate is controlled by a multiplicative relation between light and nutrients, but the nutrient/nutrient interactions are represented by a harmonic mean. This option has been used by Water Resources Engineers in the application of a QUAL-II-like model, WREDUN, to Lake Dunlap (Brandes and Stein, no date; see also Bowie et al., 1985).

Walker (1983) has cautioned against using the harmonic mean option in systems where one nutrient is in excess (say nitrogen, so that $FN \rightarrow 1.0$) and the other is extremely limiting (say phosphorus, so that $FP \rightarrow 0.0$). In this case the value of the nutrient attenuation factor approaches 2 FP, rather than FP, as expected.

3.2.3 Algal-Light Relationships

3.2.3.1 Light Functions

A variety of mathematical relationships between photosynthesis and light have been reported in the literature (Jassby and Platt, 1976; Field and Effler, 1982). Although they differ in mathematical form, the relationships exhibit similar characteristics. All show an increasing rate of photosynthesis with increasing light intensity up to a maximum or saturation value. At high light intensities, some of the expressions exhibit photoinhibition, whereas others show photosynthetic activity remaining at the maximum rate.

QUAL2E recognizes three options for computing the algal growth limitation factor for light, FL in Equations III-3a,b,c. Light attenuation effects on the algal growth rate may be simulated using a Monod half-saturation method, Smith's function (Smith, 1936), or Steele's equation (Steele, 1962).

Light Function Option 1. Half Saturation. In this option, the algal growth limitation factor for light is defined by a Monod expression:

$$FL_z = \frac{I_z}{K_L + I_z} \qquad \text{III-4a}$$

where

FL_z = algal growth attenuation factor for light at intensity I_z

I_z = light intensity at a given depth (z), Btu/ft^2-hr

K_L = half saturation coefficient for light, Btu/ft^2-hr

z = depth variable, ft

Light Function Option 2. Smith's Function. In this option, the algal growth limitation factor for light is formulated to include second order effects of light intensity:

$$FL_z = \frac{I_z}{(K_L{}^2 + I_z{}^2)^{1/2}} \qquad \text{III-4b}$$

where

K_L = light intensity corresponding to 71% of the maximum growth rate, Btu/ft^2-hr

with the other terms as defined in Equation III-4a.

Light Function Option 3. Steel's Equation. This option incorporates an exponential function to model the effect of photoinhibition on the algal growth rate:

$$FL_z = \left(\frac{I_z}{K_L}\right) \exp\left(1 - \frac{I_z}{K_L}\right) \qquad \text{III-4c}$$

where

K_L = saturation light intensity at which the algal growth rate is a maximum, Btu/ft^2-hr

with the other terms as defined in Equation III-4a.

Note: The parameter K_L, which appears in all three light function equations is defined differently in each.

All of the light functions in Equations III-4a,b,c express the value of FL for an optically thin layer. In QUAL2E photosynthesis occurs throughout the depth of the water column. Light intensity varies with depth according to Beer's law:

$$I_z = I \exp(-\lambda z) \qquad \text{III-5}$$

where

I_z = light intensity at a given depth (z), Btu/ft^2-hr

I = surface light intensity, Btu/ft^2-hr

λ = light extinction coefficient, ft^{-1}

z = depth variable, ft

When Equation III-5 is substituted into Equations III-4a,b,c and integrated over the depth of flow, the depth-averaged light attenuation factor is obtained. The resulting expressions for the three options are:

Option 1: Half Saturation

$$FL = (1/\lambda d) \ln \left[\frac{K_L + I}{K_L + Ie^{-\lambda d}}\right] \qquad \text{III-6a}$$

K_L = light intensity at which growth rate is 50% of the maximum growth rate.

Option 2: Smith's Function

$$FL = (1/\lambda d)\ \ln\left[\frac{I/K_L + (1 + (I/K_L)^2)^{1/2}}{(I/K_L)e^{-\lambda d} + (1 + ([I/K_L]e^{-\lambda d})^2)^{1/2}}\right] \qquad \text{III-6b}$$

K_L = light intensity at which growth rate is 71% of the maximum growth rate.

Option 3: Steel's Equation

$$FL = \frac{2.718}{\lambda d}\ [e-(e^{-\lambda d(I/K_L)}) - e^{-I/K_L}] \qquad \text{III-6c}$$

K_L = light intensity at which growth rate is equal to the maximum growth rate.

where

FL = depth-averaged algal growth attenuation factor for light

K_L = light saturation coefficient, Btu/ft^2-hr

λ = light extinction coefficient, ft^{-1}

d = depth of flow, ft

I = surface light intensity, Btu/ft^2-hr

The relative merits of these light functions are discussed by various authors (Bannister, 1974; Platt et al., 1981; Swartzmann and Bentley, 1979; and Field and Effler, 1982). The half saturation method is the form used in the SEMCOG version of QUAL-II. Evidence shows that the use of Smith's function is preferrable over the half saturation method if photoinhibition effects are unimportant (Jassby and Platt, 1976). The mathematical forms of Equations III-4a,b,c are compared graphically in Figure III-2. All three equations have a single parameter, K_L; however, it is defined differently in each equation. In Figure III-2 the values of K_L are selected so that each curve passes through a common point, namely FL = 0.5 at I = 5 intensity units (i.e., a half saturation rate equal to 5 light intensity units).

3.2.3.2 Light Averaging Options

Steady state algal simulations require computation of an average value of FL, the growth attenuation factor for light, over the diurnal cycle.

There are four options in QUAL2E for computing this average. The options arise from combinations of situations regarding two factors:

- The source of the solar radiation data used in the computation, i.e., whether it is supplied externally by the user or calculated internally in the temperature heat balance.

- The nature of the averaging process, i.e., whether hourly values of FL are averaged, or a single daylight average value of solar radiation is used to estimate the mean value of FL.

The four daily light averaging options are defined below. In each case, the half saturation light function is used as an example; in practice any of the three light functions may be employed.

Option 1: FL is computed from one daylight average solar radiation value calculated in the steady state temperature heat balance:

$$FL = AFACT * f * FL_1 \qquad \text{III-7a}$$

$$FL_1 = \frac{1}{\lambda d} \ln \left[\frac{K_L + \overline{I}_{alg}}{K_L + \overline{I}_{alg} e^{-\lambda d}} \right] \qquad \text{III-7b}$$

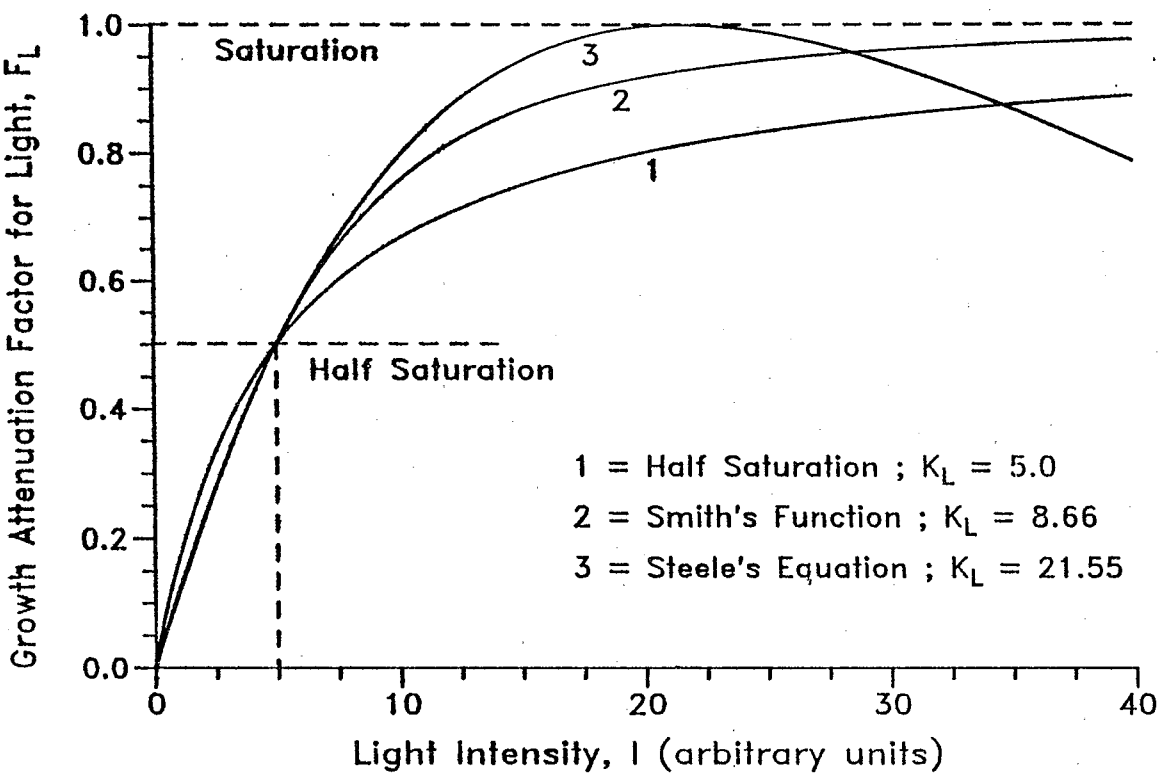

Figure III-2. QUAL2E Light Functions

$$\bar{I}_{alg} = TFACT * \bar{I}_{temp} \qquad \text{III-7c}$$

where

FL = algae growth attenuation factor for light, adjusted for daylight hours and averaging method

AFACT = a light averaging factor, used to provide similarity between calculations using a single average value of solar radiation and computations using the average of hourly values of FL

f = fraction of daylight hours

FL_1 = growth attenuation factor for light, based on daylight average light intensity ($\bar{I}_{alg}$)

λ = light extinction coefficient, ft^{-1}

d = mean depth of stream, ft

K_L = half saturation coefficient for light, Btu/ft^2-hr

$\bar{I}_{alg}$ = daylight average, photosynthetically active, light intensity, Btu/ft^2-hr

TFACT = fraction of solar radiation computed in the temperature heat balance that is photosynthetically active

$\bar{I}_{temp}$ = daylight average light intensity as computed in the temperature heat balance, Btu/ft^2-hr

Option 2: FL is computed from one daylight average solar radiation value supplied externally by the user. The calculations required to obtain FL in option 2 are the same as those for option 1, except that the value of $\bar{I}_{alg}$ is computed directly from user input of photosynthetically active solar radiation:

$$\bar{I}_{alg} = I_{tot}/N \qquad \text{III-8}$$

where

I_{tot} = total daily photosynthetically active solar radiation, Btu/ft^2

N = number of daylight hours per day, hr

Both I_{tot} and N are supplied by the user as input information. Equations III-8, III-7b, and III-7a are used to compute the value of FL. Because the user input value of I_{tot} is assumed to be the photosynthetically active radiation, the factor TFACT is not used in option 2.

Option 3: FL is obtained by averaging the hourly daylight values of FL that are computed from the hourly daylight values of solar radiation calculated in the steady state temperature heat balance:

$$FL = f * FL_2 \qquad \text{III-9a}$$

$$FL_2 = \frac{1}{N} \sum_{i=1}^{N} \frac{1}{\lambda d} \left[\frac{K_L + I_{alg,i}}{K_L + I_{alg,i} e^{-\lambda d}} \right] \qquad \text{III-9b}$$

$$I_{alg,i} = TFACT * I_{temp,i} \qquad \text{III-9c}$$

where

FL_2 = average of N hourly values of FL, based on hourly values of light intensity ($I_{alg,i}$)

$I_{alg,i}$ = hourly value of photosynthetically active light intensity, Btu/ft^2-hr

$I_{temp,i}$ = hourly value of light intensity as computed in the steady state temperature heat balance, Btu/ft^2-hr

with other terms are defined in Equations III-7a,b,c, and III-8.

Because the average FL computed in option 3 (and 4) is an average of diurnally varying values of FL, the factor AFACT is not used in the calculations.

Option 4: FL is obtained by averaging the hourly daylight values of FL that are computed from the hourly daylight values of solar radiation calculated from a single value of total daily, photosynthetically active, solar radiation and an assumed cosine function. The calculations required to obtain FL are the same as those for option 3, except that the values of $I_{alg,i}$ are computed from an internally specified cosine function:

$$I_{alg,i} = I_{tot}/N \left(1 - \frac{\cos 2\pi i}{N+1}\right), \quad i = 1,N \qquad \text{III-10}$$

As in the case of option 2, both I_{tot} and N are supplied by the user. Equations III-10, III-9b, and III-9a are then used to compute the value of FL. Because the user specified value of I_{tot} is assumed to be photosynthetically active, the factor TFACT is not used with option 4.

Three empirical factors--diurnal cosine function, AFACT, and TFACT--are used in the formulations of the four light averaging options.

Two diurnal cosine functions were evaluated for use in QUAL2E: (1) a modified form of the one in the SEMCOG version of QUAL-II, and (2) the form used in QUAL-TX (Texas Water Development Board, 1984). The function in SEMCOG was modified to produce non-zero solar radiation values for each daylight hour, as given in Equation III-10. The form used in QUAL-TX is:

$$I_{alg,i} = \frac{I_{tot}}{2N} \left[\cos\left(\frac{\pi(i-1)}{N}\right) - \cos\left(\frac{\pi i}{N}\right)\right], \quad i=1,N \qquad \text{III-11}$$

Equations III-10 and III-11 were evaluated by comparing simulated values of FL from modeling options 2 and 4 (i.e., in effect computing values of AFACT). Simulations were performed over a range of values of K_L, λ, d, I_{tot}, and N, as well as for each of the three light functions. The values of AFACT averaged 0.92 and 0.94 for the SEMCOG and Texas equations, respectively. There was no compelling reason to include both functions (with the user specifying the one to be used). The diurnal cosine function used in QUAL2E, therefore, is the modified SEMCOG version given in Equation III-10.

AFACT is the adjustment factor accounting for the nonlinear averaging inherent in computing a daily average value of FL. From the simulations just described, a resonable value of AFACT is 0.92, with a range from 0.85 to 0.98. Bowie et al. (1985) report an implied value of 1.0 (Eq. 3.33), and Walker (1983) suggests using a value of 0.85.

TFACT is the photosynthetically active fraction of total solar radiation. When performing algae simulations, it is important that the value of light intensity and light saturation coefficient, K_L, be in units of photosynthetically active radiation, PAR (Bannister, 1974; Field and Effler, 1983; and Stefan et al., 1983). Because the temperature heat balance computes total radiation over a wide spectrum, this value must be adjusted to PAR if it is to be used in the algae simulation. The ratio of energy in the visible band (PAR) to energy in the complete (standard) spectrum is approximately 0.43 to 0.45 (Bannister, 1974 and Stefan et al., 1983). TFACT is a user input variable; thus a value to meet site specific conditions may be used.

Summary of Daily Averaging Options: The selection of a light averaging option depends largely on the extent to which the user wishes to account for the diurnal variation in light intensity. Options 1 and 2 use a single calculation of FL based on an "average" daily solar radiation value. Options 3 and 4 calculate hourly values of FL from hourly values of solar radiation and then average the hourly FL values to obtain the daily average value. Options 1 and 3 use the solar radiation from the temperature heat balance routines. (Thus both algae and temperature simulations draw on the same source for solar radiation.) Options 2 and 4 use the solar radiation value provided by the user for algae simulation. Thus, either option 2 or 4 must be selected when algae are simulated and temperature is not. The light

averaging factor (AFACT) is used to provide similarity in FL calculations between options 1 and 2 versus options 3 and 4. The solar radiation factor (TFACT) specifies the fraction of the solar radiation computed in the heat balance, which is photosynthetically active. It is used only with options 1 or 3.

In dynamic algae simulations, photosynthetically active radiation is computed hourly using Equation III-9c unless temperature is not simulated, in which case photosynthetically active solar radiation data must be supplied with the local climatology data.

3.2.3.3 Algal Self Shading

The light extinction coefficient, λ, in Equations III-6a,b,c is coupled to the algal density using the nonlinear equation

$$\lambda = \lambda_0 + \lambda_1 \alpha_0 A + \lambda_2 (\alpha_0 A)^{2/3} \qquad \text{III-12}$$

where

λ_0 = non-algal portion of the light extinction coefficient, ft^{-1}

λ_1 = linear algal self shading coefficient, ft^{-1} (ug-Chl<u>a</u>/L)$^{-1}$

λ_2 = nonlinear algal self shading coefficient, ft^{-1} (ug-Chl<u>a</u>/L)$^{-2/3}$

α_0 = conversion factor, ug-Chl<u>a</u> /mg A

A = algal biomass concentration, mg-A/L

Appropriate selection of the values of λ_1 and λ_2 allows modeling of a variety of algal self-shading, light-extinction relationships:

- No algal self shading (QUAL-II SEMCOG)

  $\lambda_1 = \lambda_2 = 0$

- Linear algal self shading (JRB Associates, 1983)

  $\lambda_1 \neq 0 \quad , \quad \lambda_2 = 0$

- Nonlinear algal self shading (Riley Eq., in Bowie <u>et al</u>., 1985)

  $\lambda_1 = 0.00268$, ft^{-1} (ug-Chl<u>a</u>/L)$^{-1}$

  $\lambda_2 = 0.0165$, ft^{-1} (ug-Chl<u>a</u>/L)$^{-2/3}$

or

$$\lambda_1 = 0.0088,\ m^{-1}\ (ug\text{-}Chl\underline{a}/L)^{-1}$$

$$\lambda_2 = 0.054,\ m^{-1}\ (ug\text{-}Chl\underline{a}/L)^{-2/3}$$

3.2.4 Algal Nutrient Relationships

The algal growth limitation factors for nitrogen (FN) and for phosphorus (FP) are defined by the Monod expressions:

$$FN = \frac{N_e}{N_e + K_N} \qquad \text{III-13}$$

and

$$FP = \frac{P_2}{P_2 + K_P} \qquad \text{III-14}$$

where

N_e = the effective local concentration of available inorganic nitrogen, mg-N/L

K_N = the Michaelis-Menton half-saturation constant for nitrogen, mg-N/L

P_2 = the local concentration of dissolved phosphorus, mg-P/L

K_P = the Michaelis-Menton half-saturation constant for phosphorus, mg-P/L

Algae are assumed to use ammonia and/or nitrate as a source of inorganic nitrogen. The effective concentration of available nitrogen is given by:

$$N_e = N_1 + N_3 \qquad \text{III-15}$$

where

N_1 = concentration of ammonia nitrogen, mg-N/L

N_3 = concentration of nitrate nitrogen, mg-N/L

The empirical half-saturation constants for nitrogen, K_N, and phosphorus, K_P, are used to adjust the algal growth rate to account for those

factors that can potentially limit algal growth. Each constant is actually the level at which that particular factor limits algal growth to half the maximal or "saturated" rate (Bowie et al., 1985). Table III-3 at the end of this chapter lists typical values of the half-saturation constants for nitrogen and phosphorus. If algal concentrations are simulated and either nitrogen, phorphorus, or both are not simulated, the program assumes that the parameter not simulated is not limiting.

3.2.5 Temperature Dependence in Algae Simulation

The algal growth rate and death rates are temperature dependent. They are corrected within the model, as are all other temperature dependent systems variables, according to the procedure explained in Section 3.10.

3.3 NITROGEN CYCLE

In natural aerobic waters, there is a stepwise transformation from organic nitrogen to ammonia, to nitrite, and finally to nitrate. The nitrogen cycle in QUAL2E contains all four of these components, as shown in Figure III-1. The incorporation of organic nitrogen as a state variable, an organic nitrogen settling term, and an algal nitrogen uptake preference factor are the primary enhancements to the nitrogen cycle in QUAL2E compared to the SEMCOG version of QUAL-II. The differential equations governing transformations of nitrogen from one form to another are shown below.

3.3.1 Organic Nitrogen

$$\frac{dN_4}{dt} = \alpha_1 \rho A - \beta_3 N_4 - \sigma_4 N_4 \qquad \text{III-16}$$

where

N_4 = concentration of organic nitrogen, mg-N/L

β_3 = rate constant for hydrolysis of organic nitrogen to ammonia nitrogen, temperature dependent, day^{-1}

α_1 = fraction of algal biomass that is nitrogen, mg-N/mg-A

ρ = Algal respiration rate, day^{-1}

A = algal biomass concentration, mg-A/L

σ_4 = rate coefficient for organic nitrogen settling, temperature dependent, day^{-1}

3.3.2 Ammonia Nitrogen

$$\frac{dN_1}{dt} = \beta_3 N_4 - \beta_1 N_1 + \sigma_3/d - F_1 \alpha_1 \mu A \qquad \text{III-17}$$

where

$$F_1 = P_N N_1/(P_N N_1 + (1 - P_N)N_3) \qquad \text{III-18}$$

N_1 = the concentration of ammonia nitrogen, mg-N/L

N_3 = the concentration of nitrate nitrogen, mg-N/L

N_4 = the concentration of organic nitrogen, mg-N/L

β_1 = rate constant for the biological oxidation of ammonia nitrogen, temperature dependent, day^{-1}

β_3 = organic nitrogen hydrolysis rate, day^{-1}

α_1 = fraction of algal biomass which is nitrogen, mg-N/mg-A

σ_3 = the benthos source rate for ammonia nitrogen, mg-N/ft^2-day

d = mean depth of flow, ft

F_1 = fraction of algal nitrogen uptake from ammonia pool

μ = the local specific growth rate of algae, day^{-1}

A = algal biomass concentration, mg-A/L

P_N = preference factor for ammonia nitrogen (0 to 1.0)

The QUAL2E model includes an algal preference factor for ammonia, P_N (Bowie et al., 1985; JRB Associates, 1983). The ammonia preference factor is equivalent to the fraction of algal nitrogen uptake from the ammonia pool when the concentrations of ammonia and nitrate nitrogen are equal.

3.3.3 Nitrite Nitrogen

$$\frac{dN_2}{dt} = \beta_1 N_1 - \beta_2 N_2 \qquad \text{III-19}$$

where

N_1 = the concentration of ammonia nitrogen, mg-N/L

N_2 = the concentration of nitrite nitrogen, mg-N/L

β_1 = rate constant for the oxidation of ammonia nitrogen, temperature dependent, day^{-1}

β_2 = rate constant for the oxidation of nitrite nitrogen, temperature dependent, day^{-1}

3.3.4 Nitrate Nitrogen

$$\frac{dN_3}{dt} = \beta_2 N_2 - (1 - F)\alpha_1 \mu A \qquad \text{III-20}$$

where

F = fraction of algal nitrogen taken from ammonia pool, as defined in Section 3.3.2

α_1 = fraction of algal biomass that is nitrogen, mg-N/mg-A

μ = local specific growth rate of algae, day^{-1}

3.3.5 Inhibition of Nitrification at Low Dissolved Oxygen

QUAL2E has the capability of inhibiting (retarding) the rate of nitrification at low values of dissolved oxygen. This inhibition effect has been reported by others (Department of Scientific and Industrial Research, 1964; Texas Water Development Board, 1984).

Nitrification rates are modified in QUAL2E by computing an inhibition correction factor (having a value between zero and one) and then applying this factor to the values of the nitrification rate coefficients, β_1, and β_2. The nitrification rate correction factor is computed according to a first order equation:

$$CORDO = 1.0 - \exp(-KNITRF * DO) \qquad \text{III-21}$$

where

CORDO = nitrification rate correction factor

exp = exponential function

KNITRF = first order nitrification inhibition coefficient, mg/L^{-1}

DO = dissolved oxygen concentration, mg/L

The correction factor is applied to the ammonia and nitrite oxidation rates by:

Ammonia: $(\beta_1)_{inhib.} = CORDO * (\beta_1)_{input}$ III-22

Nitrite: $(\beta_2)_{inhib.} = CORDO * (\beta_2)_{input}$ III-23

A value of 0.6 for KNITRF closely matches the inhibition formulation in QUAL-TX, the Texas Water Development Board version of QUAL-II, whereas, a value of 0.7 closely simulates the data for the Thames Estuary (DSIR, 1964).

3.4 PHOSPHORUS CYCLE

The phosphorus cycle operates like the nitrogen cycle in many respects. Organic forms of phosphorus are generated by the death of algae, which then convert to the dissolved inorganic state, where it is available to algae for primary production. Phosphorus discharged from sewage treatment plants is generally in the dissolved inorganic form and is readily taken up by algae (Bowie et al., 1985). QUAL2E revises the SEMCOG version of QUAL-II, which included only dissolved phosphorus, to simulate the interactions between organic and dissolved phosphorus. Below are the differential equations governing transformations of phosphorus from one form to another.

3.4.1 Organic Phosphorus

$$\frac{dP_1}{dt} = \alpha_2 \rho A - \beta_4 P_1 - \sigma_5 P_1 \qquad \text{III-24}$$

where

P_1 = the concentration of organic phosphorus, mg-P/L

α_2 = phosphorus content of algae, mg P/mg-A

ρ = algal respiration rate, day^{-1}

A = algal biomass concentration, mg-A/L

β_4 = organic phosphorus decay rate, temperature dependent, day^{-1}

σ_5 = organic phorphorus settling rate, temperature dependent, day^{-1}

3.4.2 Dissolved Phosphorus

$$\frac{dP_2}{dt} = \beta_4 P_1 + \sigma_2/d - \alpha_2 \mu A \qquad \text{III-25}$$

where

P_2 = concentration of inorganic or dissolved phosphorus, mg-P/L

σ_2 = benthos source rate for dissolved phosphorus, temperature dependent, mg-P/ft^2-day

d = mean stream depth, ft

μ = algal growth rate, day^{-1}

A = algal biomass concentration, mg-A/L

3.5 CARBONACEOUS BOD

The QUAL2E model assumes a first order reaction to describe deoxygenation of ultimate carbonaceous BOD in the stream. The BOD function as expressed in the model also takes into account additional BOD removal due to sedimentation, scour and flocculation, which do not exert an oxygen demand (Thomas, 1948):

$$\frac{dL}{dt} = - K_1 L - K_3 L \qquad \text{III-26}$$

where

L = the concentration of ultimate carbonaceous BOD, mg/L

K_1 = deoxygenation rate coefficient, temperature dependent, day^{-1}

K_3 = the rate of loss of carbonaceous BOD due to settling, temperature dependent, day^{-1}

QUAL2E simulates ultimate BOD in the general case; however, the user may choose to use 5-day BOD values for input and output. In this case, the model will make the necessary coversions from 5-day to ultimate BOD. The conversion equation is:

$$BOD_5 = BOD_u \, (1.0 - \exp(5 * KBOD)) \qquad \text{III-27}$$

where

BOD_5 = 5-day BOD, mg/L

BOD_u = ultimate BOD, mg/L

KBOD = BOD conversion rate coefficient, day^{-1}

The SEMCOG version of QUAL-II uses a value of 0.23 day^{-1} for KBOD. With QUAL2E, the user may specify the appropriate value for this conversion. Note: when modeling 5-day BOD, the same conversion coefficient is applied to all input BOD_5 forcing functions (headwaters, incremental flows, point loads, and the downstream boundary condition).

3.6 DISSOLVED OXYGEN

The oxygen balance in a stream system depends on the capacity of the stream to reaerate itself. This capacity is a function of the advection and diffusion processes occurring within the system and the internal sources and sinks of oxygen. The major sources of oxygen, in addition to atmospheric reaeration, are the oxygen produced by photosynthesis and the oxygen contained in the incoming flow. The sinks of dissolved oxygen include biochemical oxidation of carbonaceous and nitrogenous organic matter, benthic oxygen demand and the oxygen utilized by algae respiration (Bowie et al., 1985).

The differential equation used in QUAL2E to describe the rate of change of oxygen is shown below. Each term represents a major source or sink of oxygen.

$$\frac{dO}{dt} = K_2(O^*-O) + (\alpha_3 \mu - \alpha_4 \rho) A - K_1 L - K_4/d - \alpha_5 \beta_1 N_1 - \alpha_6 \beta_2 N_2 \qquad \text{III-28}$$

where

O = the concentration of dissolved oxygen, mg/L

O* = the saturation concentration of dissolved oxygen at the local temperature and pressure, mg/L

α_3 = the rate of oxygen production per unit of algal photosynthesis, mg-O/mg-A

α_4 = the rate of oxygen uptake per unit of algae respired, mg-O/mg-A

α_5 = the rate of oxygen uptake per unit of ammonia nitrogen oxidation, mg-O/mg-N

α_6 = the rate of oxygen uptake per unit of nitrite nitrogen oxidation, mg-O/mg-N

μ = algal growth rate, temperature dependent, day^{-1}

ρ = algal respiration rate, temperature dependent, day^{-1}

A = algal biomass concentration, mg-A/L

L = concentration of ultimate carbonaceous BOD, mg/L

d = mean stream depth, ft

K_1 = carbonaceous BOD deoxygenation rate, temperature dependent, day^{-1}

K_2 = the reaeration rate in accordance with the Fickian diffusion analogy, temperature dependent, day^{-1}

K_4 = sediment oxygen demand rate, temperature dependent, g/ft^2-day

β_1 = ammonia oxidation rate coefficient, temperature dependent, day^{-1}

β_2 = nitrite oxidation rate coefficient, temperature dependent, day^{-1}

N_1 = ammonia nitrogen concentration, mg-N/L

N_2 = nitrite nitrogen concentration, mg-N/L

3.6.1 Dissolved Oxygen Saturation Concentration

The solubility of dissolved oxygen in water decreases with increasing temperature, increasing dissolved solids concentration, and decreasing atmospheric pressure (Bowie et al., 1985). QUAL2E uses a predictive equation for the saturation (equilibrium) concentration of dissolved oxygen (APHA, 1985).

$$\ln O^* = -139.34410 + (1.575701 \times 10^5/T) - (6.642308 \times 10^7/T^2) + (1.243800 \times 10^{10}/T^3) - (8.621949 \times 10^{11}/T^4) \qquad \text{III-29}$$

where:

O^* = equilibrium oxygen concentration at 1.000 atm, mg/L

T = temperature (°K) = (°C+273.150) and °C is within the range 0.0 to 40.0°C

For non-standard conditions of pressure, the equilibrium concentration of dissolved oxygen is corrected by the equation III-30:

$$Op = O^*P \left[\frac{(1-P_{WV}/P)\ (1-\phi P)}{(1-P_{WV})\ (1-\phi)}\right] \qquad \text{III-30}$$

where

Op = equilibrium oxygen concentration at non-standard pressure, mg/L

O* = equilibrium oxygen concentration at 1.000 atm, mg/L

P = pressure (atm) and is within 0.000 to 2.000 atm

P_{WV} = partial pressure of water vapor (atm), which may be computed from:

$$\ln P_{WV} = 11.8571 - (3840.70/T) - 216961/T^2) \qquad \text{III-31}$$

and

$$\phi = 0.000975 - (1.426 \times 10^{-5}t) + (6.436 \times 10^{-8}t^2) \qquad \text{III-32}$$

where

t = temperature, °C

The equations in Standard Methods (1985) for computing dissolved oxygen saturation concentrations also include corrections for salinity and chloride. Because neither salinity nor chloride is explicitly modeled, QUAL2E does not correct O* for chloride or salinity. Furthermore, the pressure correction to O* (Equation III-30) is made only when temperature is modeled, because barometric pressure data are a primary requirement of the heat balance equations.

The dissolved oxygen saturation concentrations computed from the Texas and SEMCOG versions of QUAL-II are compared to those from the Standard Methods formulations of QUAL2E in Table III-1.

3.6.2 Atmospheric Reaeration Coefficient Estimation

The reaeration coefficient (K_2) is most often expressed as a function of stream depth and velocity. QUAL2E provides eight options for estimating or reading in K_2 values, which are discussed in the sections below. A comparative study of reaeration prediction equation performance has been reported by St. John et al. (1984).

TABLE III-1
COMPARISON OF DISSOLVED OXYGEN SATURATION CONCENTRATIONS
(Barometric Pressure = 1 atm, Chloride = 0.0mg/L,
Equilibrium with Air Saturated with Water Vapor)

Temperature, °C	QUAL-II SEMCOG	QUAL-TX Texas	QUAL2E Std. Meth.
0.	14.631	14.584	14.621
1.	14.227	14.187	14.217
2.	13.837	13.806	13.830
3.	13.461	13.441	13.461
4.	13.100	13.091	13.108
5.	12.752	12.755	12.771
6.	12.418	12.433	12.448
7.	12.096	12.124	12.139
8.	11.787	11.828	11.843
9.	11.489	11.544	11.560
10.	11.203	11.271	11.288
11.	10.927	11.009	11.027
12.	10.661	10.758	10.777
13.	10.406	10.517	10.537
14.	10.159	10.285	10.306
15.	9.922	10.062	10.084
16.	9.692	9.848	9.870
17.	9.471	9.642	9.665
18.	9.257	9.444	9.467
19.	9.050	9.253	9.276
20.	8.849	9.069	9.093
21.	8.655	8.891	8.915
22.	8.465	8.720	8.744
23.	8.281	8.555	8.578
24.	8.101	8.396	8.418
25.	7.925	8.241	8.264
26.	7.753	8.092	8.114
27.	7.584	7.948	7.969
28.	7.417	7.807	7.828
29.	7.252	7.672	7.691
30.	7.089	7.540	7.559
31.	6.927	7.412	7.430
32.	6.765	7.288	7.305
33.	6.604	7.167	7.183
34.	6.442	7.049	7.065
35.	6.280	6.935	6.949
36.	6.116	6.823	6.837
37.	5.950	6.715	6.727
38.	5.782	6.609	6.620
39.	5.612	6.506	6.515
40.	5.438	6.406	6.413

K_2 Option 1

Option 1 allows the user to read in K_2 values that have been previously selected by the modeler. This option is useful in modeling unusual situations such as ice cover (see Section 3.6.3).

K_2 Option 2

Using data collected in field measurements of stream reaeration, Churchill, Elmore, and Buckingham (1962) developed the following expression for K_2 at 20°C.

$$K_2^{20} = 5.026\ \bar{u}^{\,0.969}\ d^{-1.673} \times 2.31 \qquad \text{III-33}$$

where

$\bar{u}$ = average velocity in the stream, ft/sec.

d = average depth of the stream, ft

K_2 = reaeration coefficient, day^{-1}

K_2 Option 3

O'Connor and Dobbins (1958) proposed equations based on the turbulence characteristics of a stream. For streams displaying low velocities and isotropic conditions, Equation III-34 was developed:

$$K_2^{20} = \frac{(D_m\ \bar{u})^{0.5}}{d^{1.50}} \qquad \text{III-34}$$

For streams with high velocities and nonisotropic conditions, the relationship is:

$$K_2^{20} = \frac{480 D_m^{0.5}\ S_o^{0.25}}{d^{1.25}} \times 2.31 \qquad \text{III-35}$$

where

S_o = slope of the streambed, ft/ft

d = mean stream depth, ft

$\bar{u}$ = mean velocity, ft/day

K_2 = reaeration coefficient, day^{-1}

and D_m is the molecular diffusion coefficient (ft^2/day), which is given by:

$$D_m = 1.91 \times 10^3 \ (1.037)^{T-20} \qquad \text{III-36}$$

Equation III-34 has been found to be generally applicable for most cases and is the equation used in QUAL2E for Option 3. Equation III-35 can be used to calculate K_2 outside the model and input it directly under Option 1.

K_2 Option 4

Based on the monitoring of six streams in England, Owens et al. (1964) obtained reaeration estimates for shallow, fast moving streams. Combining their data with that of Churchill et al., they developed an euation for streams exhibiting depths of 0.4 to 11.0 feet and velocities of 0.1 to 5.0 ft/sec:

$$K_2^{20} = 9.4 \ \bar{u}^{0.67}/d^{1.85} \times 2.31 \qquad \text{III-37}$$

where

$\bar{u}$ = mean velocity, ft/sec

d = mean depth, ft

K_2 Option 5

Thackston and Krenkel (1966) proposed the following equation based on their investigation of several rivers in the Tennessee Valley Authority system.

$$K_2^{20} = 10.8 \ (1 + F^{0.5}) \ \frac{u^*}{d} \times 2.31 \qquad \text{III-38}$$

where F is the Froude number, which is given by:

$$F = \frac{u^*}{\sqrt{g\ d}} \qquad \text{III-39}$$

and u* is the shear velocity, ft/sec.:

$$u^* = \sqrt{d\ S_e g} = \frac{\bar{u}\ n\ \sqrt{g}}{1.49\ d^{1.167}} \qquad \text{III-40}$$

where

d = mean depth, ft

g = acceleration of gravity, ft/sec^2

S_e = slope of the energy gradient

$\overline{u}$ = mean velocity, ft/sec

n = Manning's coefficient

K_2 Option 6

Langbien and Durum (1967) developed a formula for K_2 at 20°C:

$$K_2^{20} = 3.3\ \overline{u}/d^{1.33} \times 2.31 \qquad \text{III-41}$$

where

$\overline{u}$ = mean velocity, ft/sec

d = mean depth, ft

K_2 Option 7

This option computes the reaeration coefficient from a power function of flow. This empirical relationship is similar to the velocity and depth correlations with flow used in the hydraulics section of QUAL2E, i.e.,

$$K_2 = aQ^b \qquad \text{III-42}$$

where

a = coefficient of flow for K_2

Q = flow, ft^3/sec

b = exponent on flow for K_2

K_2 Option 8

The method of Tsivoglou and Wallace (1972) assumes that the reaeration coefficient for a reach is proportional to the change in elevation of the water surface in the reach and inversely proportional to the flow time through the reach. The equation is:

$$K_2^{20} = c \frac{\Delta h}{t_f} \qquad \text{III-43}$$

where

c = escape coefficient, ft^{-1}

Δh = change in water surface elevation in reach, ft

t_f = flow time within reach, days

Assuming uniform flow, the change in water surface elevation is

$$\Delta h = S_e \, \Delta x \qquad \text{III-44}$$

where

S_e = slope of the energy gradient, ft/ft

Δx = reach length, ft

and the time of passage through a reach is

$$t_f = \frac{\Delta x}{\bar{u}} \qquad \text{III-45}$$

where

$\bar{u}$ = mean velocity in reach, ft/sec

Substituting the above in equation III-43 gives

$$K_2^{20} = (3600 \times 24) \, c S_e \, \bar{u} \qquad \text{III-46}$$

Equation III-46 is the form of Option 8 used in QUAL2E. The constants 3600 and 24 convert velocity to units of feet per day. The slope may be input directly for computing K_2 with this option, or it can be calculated from Manning's equation as follows

$$S_e = \frac{\bar{u}^2 \, n^2}{(1.49)^2 \, d^{4/3}} \qquad \text{III-47}$$

where

d = mean depth, ft

n = Manning's coefficient

The escape coefficient is usually treated as a variable and determined empirically. TenEch (1978) recommends the following guideline in determining c values, analogous to that recommended for uncalibrated stream segments by Tsivoglou and Neal (1976):

$$c = 0.054 \text{ ft}^{-1} \text{ (at 20°C) for } 15 <= Q <= 3000 \text{ ft}^3/\text{sec}$$

$$c = 0.110 \text{ ft}^{-1} \text{ (at 20°C) for } 1 <= Q <= 15 \text{ ft}^3/\text{sec}$$

3.6.3 Ice Cover

Ice cover on streams during winter low flow conditions may significantly affect reaeration. Reaeration rates are decreased because ice cover reduces the surface area of the air-water interface through which reaeration occurs (TenEch, 1978). Approaches recommended by TenEch (1978) for estimating the extent of ice cover include:

- Statistical analyses of past records
- Steady state heat budget analysis (including the U.S. Army Corps of Engineers differential equations)
- Extensive field observations

To adjust the reaeration rate for winter ice cover conditions in the QUAL2E model, the calculated reaeration rate must be multiplied by an "ice cover factor" and input under Option 1. TenEch recommends factors ranging from 0.05 for complete ice cover to 1.0 for no ice cover. Depending on the extent of cover, reaeration values can be greatly reduced.

3.6.4 K_2 Default Values

There are no default K_2 values in QUAL2E. In some versions of QUAL-II, a default value of K_2 is computed, accounting for the influences of wind-induced turbulence and diffusion under low-velocity conditions. In those models, when the calculated values of K_2 are less than two divided by the depth of the reach (2/d), K_2 is set equal to 2/d. This feature has not always proved useful, particularly when simulating the very low reaeration rates; thus it is not included in QUAL2E.

3.6.5 Dam Reaeration

QUAL2E has the capability of modeling oxygen input to the system from reaeration over dams. The following equation described by Butts and Evans (1983) and attributable to Gameson is used to estimate oxygen input from dam reaeration.

$$D_a - D_b = [1 - \frac{1}{1 + 0.116abH(1 - 0.034H)(1 + 046T)}] D_a \quad \text{III-48}$$

where

D_a = oxygen deficit above dam, mg/L

D_b = oxygen deficit below dam, mg/L

T = temperature, °C

H = height through which water falls, ft

a = empirical water quality factor

= 1.80 in clean water

= 1.60 in slightly polluted water

= 1.0 in moderately polluted water

= 0.65 in grossly polluted water

b = empirical dam aeration coefficients

= 0.70 to 0.90 for flat broad crested weir

= 1.05 for sharp crested weir with straight slope face

= 0.80 for sharp crested weir with vertical face

= 0.05 for sluice gates with submerged discharge

The factors H, a and b are input for each dam. The model includes a provision for bypassing some or all of the flow around the dams (e.g., through generators). The fraction of the total flow that spills over the dam is supplied as an input variable.

3.7 COLIFORMS

Coliforms are used as an indicator of pathogen contamination in surface waters. Expressions for estimating coliform concentrations are

usually first order decay functions, which only take into account coliform die-off (Bowie et al., 1985). The QUAL2E model uses such an expression:

$$\frac{dE}{dt} = - K_5 E \qquad \text{III-49}$$

where

E = concentration of coliforms, colonies/100 ml

K_5 = coliform die-off rate, temperature dependent, day^{-1}

3.8 ARBITRARY NONCONSERVATIVE CONSTITUENT

QUAL2E has the provision for modeling an arbitrary nonconservative constituent (ANC). In addition to a first order decay mechanism, there are source and sink terms in the mass balance. The differential equation describing the interactions for an arbitrary nonconservative constituent is:

$$\frac{dR}{dt} = -K_6 R - \sigma_6 R + \sigma_7/d \qquad \text{III-50}$$

where

R = concentration of the nonconservative constituent, mg-ANC/L

K_6 = decay rate for the constituent, temperature dependent, day^{-1}

σ_6 = rate coefficient for constituent settling, temperature dependent, day^{-1}

σ_7 = benthal source for constituent, temperature dependent, mg-ANC/ft^2-day

d = mean stream depth, ft

3.9 TEMPERATURE

Temperature is modeled by performing a heat balance on each computational element in the system. The heat balance accounts for temperature inputs and losses from the forcing functions as well as the heat exchanged between the water surface and the atmosphere. The air-water heat balance terms include long and short wave radiation, convection, and evaporation using:

$$H_n = H_{sn} + H_{an} - H_b - H_c - H_e \qquad \text{III-51}$$

where

H_n = net heat flux passing the air water surface, Btu/ft^2-day

H_{sn} = net short wave solar radiation after losses from absorption and scattering in the atmosphere and by reflection at the interface, Btu/ft^2-day

H_{an} = net long wave atmosphere radiation after reflection, Btu/ft^2-day

H_b = outgoing long wave back radiation, Btu/ft^2-day

H_c = convective heat flux, Btu/ft^2-day

H_e = heat loss by evaporation, excluding sensible heat loss, Btu/ft^2-day

In order for QUAL2E to perform the heat balance computations, the user must supply a variety of data, including the longitude and latitude of the basin, the time of year, evaporation coefficients, and a dust attenuation coefficient. Local climatological information in the form of time of day, wet and dry bulb air temperatures, atmospheric pressure, cloud cover and wind velocity also must be provided.

In the dynamic mode, local climatological data must be supplied at regular (typically 3 hour) intervals. In this manner the source/sink term for the heat balance is updated in time to simulate the diurnal response of the steady hydraulic system to changing temperature conditions.

In the steady state mode, average local climatological data must be supplied by the user. The program uses linear approximations for the long-wave back radiation and evaporation terms for solution of the steady state heat balance. The reader is referred to Chapter 4 of this report for a detailed treatment of the temperature simulation.

In the dynamic mode, local climatology data are applied uniformly over the entire river basin (i.e., there is no spatial variation). In the steady state mode, local climatology data may vary spatially by reach.

3.10 TEMPERATURE DEPENDENCE OF RATE COEFFICIENTS

The temperature values computed in QUAL2E are used to correct the rate coefficients in the source/sink terms for the other water quality variables. These coefficients are input at 20°C and are then corrected to temperature using a Streeter-Phelps type formulation:

$$X_T = X_{20}\ \theta^{(T-20°)} \qquad \text{III-52}$$

where

X_T = the value of the coefficient at the local temperature (T)

X_{20} = the value of the coefficient at the standard temperature (20°C)

θ = an empirical constant for each reaction coefficient

The values of the temperature correction factors, θ, may be specified by the user. In the absence of user specified values, the default values shown in Table III-2 are employed. For comparison purposes, the θ values used in the SEMCOG version of QUAL-II are also listed in Table III-2.

If temperature is not simulated, the temperature value specified for the initial condition is assumed to be the temperature for the simulation.

3.11 REACTION RATES AND PHYSICAL CONSTANTS

The chemical and biological reations that are simulated by QUAL2E are represented by a complex set of equations that contain many system parameters; some are constant, some are spatially variable, and some are temperature dependent. Table III-3 lists these system parameters and gives the usual range of values, units, and types of variation. Kramer (1970), Chen and Orlob (1972), and Bowie et al. (1985) give detailed discussions of the basic sources of data, ranges and reliabilities of each of these parameters. Final selection of the values for many of these system parameters or measurement of sensitive ones should be made during model calibration and verification.

TABLE III-2
DEFAULT TEMPERATURE CORRECTION, θ, VALUES FOR QUAL2E

Rate Coefficient	Symbol	Default Values SEMCOG	Default Values QUAL2E
BOD Decay	K_1	1.047	1.047
BOD Settling	K_3	-	1.024
Reaeration	K_2	1.0159	1.024
SOD Uptake	K_4	-	1.060
Organic N Decay	β_3	-	1.047
Organic N Settling	σ_4	-	1.024
Ammonia Decay	β_1	1.047	1.083
Ammonia Source	σ_3	-	1.074
Nitrite Decay	β_2	1.047	1.047
Organic P Decay	β_4	-	1.047
Organic P Settling	σ_5	-	1.024
Dissolved P Source	σ_2	-	1.074
Algal Growth	μ	1.047	1.047
Algal Respiration	ρ	1.047	1.047
Algal Settling	σ_1	-	1.024
Coliform Decay	K_5	1.047	1.047
ANC	K_6	1.047	1.000
ANC	σ_6	-	1.024
ANC	σ_7	-	1.000

Note: - = not temperature dependent in QUAL-II SEMCOG.

ANC = Arbitrary Nonconservative Constituent

TABLE III-3
TYPICAL RANGES FOR QUAL2E REACTION COEFFICIENTS

Variable	Description	Units	Range of Values	Variable by Reach	Temperature Dependent
α_0	Ratio of chlorophyll-a to algal biomass	$\frac{\text{ug-Chla}}{\text{mg A}}$	10-100	No	No
α_1	Fraction of algal biomass that is Nitrogen	$\frac{\text{mg-N}}{\text{mg A}}$	0.07-0.09	No	No
α_2	Fraction of algal biomass that is Phosphorus	$\frac{\text{mg-P}}{\text{mg A}}$	0.01-0.02	No	No
α_3	O_2 production per unit of algal growth	$\frac{\text{mg-O}}{\text{mg A}}$	1.4-1.8	No	No
α_4	O_2 uptake per unit of algae respired	$\frac{\text{mg-O}}{\text{mg A}}$	1.6-2.3	No	No
α_5	O_2 uptake per unit of NH_3 oxidation	$\frac{\text{mg-O}}{\text{mg N}}$	3.0-4.0	No	No
α_6	O_2 uptake per unit of NO_2 oxidation	$\frac{\text{mg-O}}{\text{mg N}}$	1.0-1.14	No	No
μ_{max}	Maximum algal growth rate	day^{-1}	1.0-3.0	No	No
ρ	Algal respiration rate	day^{-1}	0.05-0.5	No	No
K_L	Michaelis-Menton half-saturation constant for light (Option 1)	Btu/ft^2-min	0.02-0.10	No	No
K_N	Michaelis-Mention half-saturation constant for nitrogen	mg-N/L	0.01-0.30	No	No
K_P	Michaelis-Menton half-saturation constant for phosphorus	mg-P/L	.001-0.05	No	No
λ_0	Non-algal light extinction coefficient	ft^{-1}	Variable	No	No
λ_1	Linear algal self-shading coefficient	$\frac{1/ft}{\text{ug Chl}\underline{a}/L}$	0.002-0.02	No	No

TABLE III-3 (cont'd)
TYPICAL RANGES FOR QUAL2E REACTION COEFFICIENTS

Variable	Description	Units	Range of Values	Variable by Reach	Temperature Dependent
λ_2	Nonlinear algal self-shading coefficient	$\frac{1/ft}{(\lambda g\ Chl\underline{a}/L)^{2/3}}$	0.0165 (Riley)	No	No
P_N	Algal preference factor for ammonia	-	0.0-1.0	No	No
σ_1	Algal settling rate	ft/day	0.5-6.0	Yes	Yes
σ_2	Benthos source rate for dissolved phosphorus	$\frac{mg\text{-}P}{ft^2\text{-}day}$	Variable	Yes	Yes
σ_3	Benthos source rate for ammonia nitrogen	$\frac{mg\text{-}O}{ft^2\text{-}day}$	Variable	Yes	Yes
σ_4	Organic nitrogen settling rate	day^{-1}	0.001-0.1	Yes	Yes
σ_5	Organic phosphorus settling rate	day^{-1}	0.001-0.1	Yes	Yes
σ_6	Arbitrary non-conservative settling rate	day^{-1}	Variable	Yes	Yes
σ_7	Benthal source rate for arbitrary non-conservative settling rate	$\frac{mg\text{-}ANC}{ft^2\text{-}day}$	Variable	Yes	Yes
K_1	Carbonaceous deoxygeneration rate constant	day^{-1}	0.02-3.4	Yes	Yes
K_2	Reaeration rate constant	day^{-1}	0.0-100	Yes	Yes
K_3	Rate of loss of BOD due to settling	day^{-1}	-0.36-0.36	Yes	Yes
K_4	Benthic oxygen uptake	$\frac{mg\text{-}O}{ft^2\text{-}day}$	Variable	Yes	Yes
K_5	Coliform die-off rate	day^{-1}	0.05-4.0	Yes	Yes
K_6	Arbitrary non-conservative decay coefficient	day^{-1}	Variable	Yes	Yes

TABLE III-3 (cont'd)
TYPICAL RANGES FOR QUAL2E REACTION COEFFICIENTS

Variable	Description	Units	Range of Values	Variable by Reach	Temperature Dependent
β_1	Rate constant for the biological oxidation of NH_3 to NO_2	day^{-1}	0.10-1.00	Yes	Yes
β_2	Rate constant for the biological oxidation of NO_2 to NO_3	day^{-1}	0.20-2.0	Yes	Yes
β_3	Rate constant for the hydrolysis of organic-N to ammonia	day^{-1}	0.02-0.4	Yes	Yes
β_4	Rate constant for the decay of organic-P to dissolved-P	day^{-1}	0.01-0.7	Yes	Yes

4. FUNCTIONAL REPRESENTATION OF TEMPERATURE

4.1 BASIC TEMPERATURE EQUATION

The basic mass transport equation for QUAL2E was given in Section II as (see equation II-3):

$$\frac{\partial C}{\partial t} = \frac{\partial (A_x D_L \frac{\partial C}{\partial x})}{A_x \, \partial x} - \frac{\partial (A_x \, \bar{u} \, C)}{A_x \, \partial x} + \frac{dC}{dt} + \frac{s}{V} \qquad \text{IV-1}$$

In temperature modeling, C is taken as the concentration of heat (HL^{-3}) and can be equated to temperature through the relationship

$$C = \rho \, c \, (T - T_o) \qquad \text{IV-2}$$

where

ρ = the density of water ($M \, L^{-3}$)

c = the heat capacity of water ($HM^{-1} \, D^{-1}$)

T = the water temperature

T_o = an arbitrary base temperature

M = mass

H = heat energy flux

D = degrees

The parameters ρ and c can be considered constant for practical purposes. Also, the internal heat generation $\frac{dC}{dt}$, which results from viscous dissipation of energy and boundary friction, is generally small enough to be

considered negligible. Thus setting $\frac{dC}{dt} = 0$ in equation IV-1 and substituting equation IV-2 for C gives us (after some simplification):

$$\frac{\partial T}{\partial t} = \frac{\partial(A_x D_L \frac{\partial T}{\partial x})}{A_x \ \partial x} - \frac{\partial(A_x \ \bar{u} \ T)}{A_x \ \partial x} + \frac{1}{\rho c} \ \frac{s}{V} \qquad \text{IV-3}$$

The source term s/V (with units of $HL^{-3}T^{-1}$) accounts for all heat transferred across the system boundaries, i.e., heat transferred across the air-water interface and heat conducted across mud-water interface. Heat transfer across the mud-water interface is generally insignificant; hence, s/V takes on the identity of the net rate of heat input per unit volume of stream through the air-water interface.

It is most convenient to represent the interfacial heat transfer rate as a flux (H_N) having units of $HL^{-2}T^{-1}$. For a stream element of length dx and mean surface width W, H_N is related to s/V as follows.

The total rate of heat input across the air-water interface is $H_N \ dx \ W$. This heat is distributed uniformly throughout the underlying volume of $\bar{A}_x \ dx$, where $\bar{A}_x$ is the mean cross-sectional area of the element. Thus the rate of heat gain per unit volume of water, s/V, is computed as:

$$\frac{s}{V} = \frac{s}{A_x \ dx} = \frac{H_N \ (Wdx)}{\bar{A}_x \ dx} = \frac{H_N}{d} \qquad \text{IV-4}$$

where $d = \bar{A}_x/W$ is the hydraulic depth of the stream. Substituting equation IV-4 into equation IV-3 gives the generalized form of the temperature equation:

$$\frac{\partial T}{\partial t} = \frac{\partial(A_x D_L \frac{\partial T}{\partial x})}{A_x \ \partial x} - \frac{\partial(A_x \ \bar{u} \ T)}{A_x \ \partial x} + \frac{H_N}{\rho c d} \qquad \text{IV-5}$$

4.2 DEFINITION OF H_N

Heat is transferred across the air-water interface of a surface water body by three difference processes: radiation exchange, evaporation, and conduction. The individual heat terms associated with these processes are shown in Figure IV-1 and are defined in Table IV-1 with the typical ranges of their magnitudes in northern latitudes also listed.

The expression that results from the summation of these various energy fluxes is:

$$H_N = H_{sn} + H_{an} - (H_b \pm H_c + H_e) \qquad \text{IV-6}$$

where

H_N = net energy flux passing the air-water interface, Btu/ft^2-day

H_{sn} = net short-wave solar radiation flux passing through the interface after losses due to absorption and scattering in the atmosphere and by reflection at the interface, Btu/ft^2-day

H_{an} = net long-wave atmospheric radiation flux passing through the interface after reflection, Btu/ft^2-day

H_b = outgoing long-wave back radiation flux, Btu/ft^2-day

H_c = conductive energy flux passing back and forth between the interface and the atmosphere, Btu/ft^2-day

H_e = energy loss by evaporation, Btu/ft^2-day

These mechanisms by which heat is exchanged between the water surface and the atmosphere are fairly well understood and are adequately documented in the literature by Edinger and Geyer (1965). The functional representation of these terms has been defined by Water Resources Engineers, Inc. (1967).

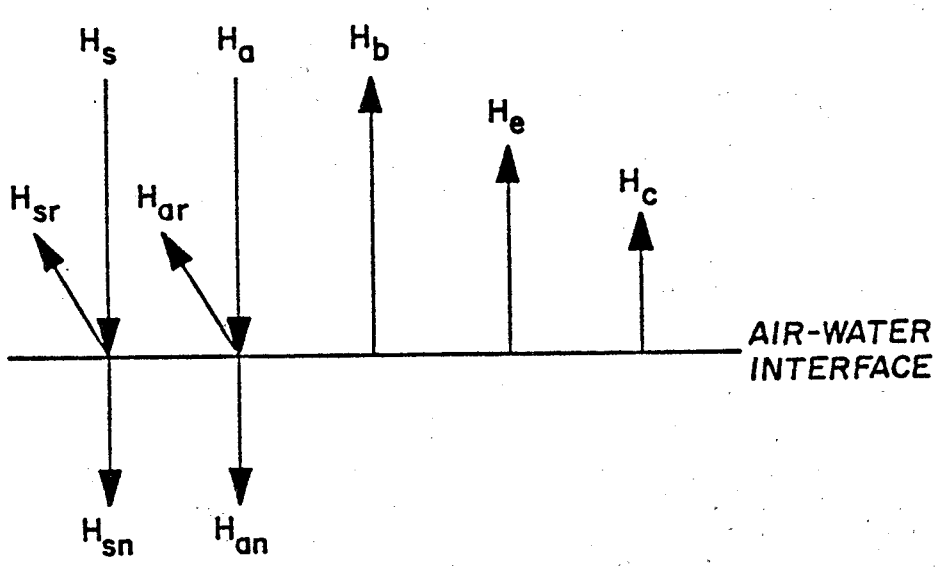

Figure IV-1. Heat Transfer Terms Associated with Interfacial Heat Transfer

TABLE IV-1
DEFINITION OF HEAT TRANSFER TERMS
ILLUSTRATED IN FIGURE 1

		Heat Term	Units	Magnitude (BTU/ft^2-day^1)
H_s	=	total incoming solar or short-wave radiation	$HL^{-2}T^{-1}$	400-2800
H_{sr}	=	reflected short-wave radiation	$HL^{-2}T^{-1}$	40-200
H_a	=	total incoming atmospheric ratiation	$HL^{-2}T^{-1}$	2400-3200
H_{ar}	=	reflected atmospheric radiation	$HL^{-2}T^{-1}$	70-120
H_b	=	back radiation from the water surface	$HL^{-2}T^{-1}$	2400-3600
H_e	=	heat loss by evaporation	$HL^{-2}T^{-1}$	150-3000
H_c	=	heat loss by conduction to atmosphere	$HL^{-2}T^{-1}$	-320 to +400

The formulations reported here were extracted from that more detailed work by Frank D. Masch and Associates and the Texas Water Development Board (1971).

4.3 NET SHORT-WAVE SOLAR RADIATION

The net incoming solar radiation is short-wave radiation which passes directly from the sun to the earth's surface. Its magnitude depends on: the altitude of the sun, which varies daily as well as seasonally for a fixed location on the earth; the dampening effect of scattering and absorption in the atmosphere due to cloud cover, and the reflection from the water surface.

The net amount of solar radiation which reaches the surface of the earth may be represented functionally on an hourly basis by:

$$H_{sn} = \underset{(i)}{H_o} \; \underset{(ii)}{a_t} \; \underset{(iii)}{(1 - R_s)} \; \underset{(iv)}{(1 - 0.65C_L^2)} \qquad \text{IV-7}$$

where

H_{sn} = net short-wave solar radiation flux, Btu/ft^2-hr

H_o = amount of radiation flux reaching the earth's atmosphere, Btu/ft^2-hr

a_t = atmospheric transmission term

R_s = Albedo or reflection coefficient

C_L = cloudiness as a fraction of sky covered

It is appropriate for purposes of this discussion to identify and treat separately the four components in equation IV-7 as (i) extraterrestrial solar radiation, (ii) radiation scattering and absorption, (iii) reflectivity, and (iv) cloudiness.

4.3.1 Extraterrestrial Radiation

The short-wave solar radiation flux that strikes the earth's outer atmosphere over a given period of time is given by Water Resources Engineers, Inc. (1967) as:

$$H_o = \frac{H_{sc}}{r^2} \{ \sin \frac{\pi\phi}{180} \sin \delta \, (t_e - t_b)$$

$$+ \frac{12}{\pi} \cos \frac{\pi\phi}{180} \cos \delta \, [\sin (\frac{\pi t_e}{12}) - \sin (\frac{\pi t_b}{12})]\} \, \Gamma \qquad \text{IV-8}$$

where

H_{sc} = solar constant = 438.0 Btu/ft^2-hr

r = normalized radius of the earth's orbit

ϕ = latitude of the site, degrees

δ = declination of the sun, degrees

t_b, t_e = hour angles corresponding to the beginning and end, respectively, of any time interval between sunrise and sunset

Γ = a correction factor for diurnal exposure to radiation flux

Listed below are several parameters in equation IV-8 requiring further definition as described by Water Resources Engineers, Inc. (1967).

a. Relative Earth-Sun Distance--

$$r = 1.0 + 0.017 \cos \left[\frac{2\pi}{365} (186-Dy)\right] \qquad \text{IV-9}$$

where Dy is the number of the day of the year (beginning January 1)

b. Declination--

$$\delta = \frac{23.45}{180} \pi \cos \left[\frac{2\pi}{365} (173-Dy)\right] \qquad \text{IV-10}$$

c, Hour Angles--

$$t_b = ST_b - \Delta t_s + ET - 12 \qquad \text{IV-11}$$

and

$$t_e = ST_e - \Delta t_s + ET - 12 \qquad \text{IV-12}$$

where ST_b, ST_e are the standard times at the beginning and end of the time interval selected

ET = an expression for time from a solar ephemeris that represents the difference in hours between "true solar time" and that computed on the basis of a yearly average. It is given for each day of the year, Dy, by

$$ET = 0.000121 - 0.12319 \sin \left[\frac{2\pi}{365} (Dy-1) - 0.0714\right]$$

$$= 0.16549 \sin \left[\frac{4\pi}{365} (Dy-1) + 0.3088\right] \qquad \text{IV-13}$$

Δt_s = difference between standard and local civil time in hours as determined from:

$$\Delta t_s = \frac{\varepsilon}{15} (L_{sm} - L_{lm}) \qquad \text{IV-14}$$

where

ε = -1 for west longitude

ε = +1 for east longitude

L_{sm} = longitude of standard meridian, degrees

L_{lm} = longitude of local meridian, degrees

d. Diurnal Exposure--

$$\Gamma = 1 \text{ when } ST_r \leq ST_b \text{ or } ST_e \leq ST_s \qquad \text{IV-15}$$

$$\Gamma = 0 \text{ when } ST_s \leq ST_b \text{ or } ST_e \leq ST_r \qquad \text{IV-16}$$

where ST_r and ST_s are the standard times of sunrise and sunset, respectively, as determined from:

$$ST_r = 12 - \frac{12}{\pi} \text{ arc cos } \left[\tan \left(\frac{\pi\phi}{180}\right) \tan \delta\right] + \Delta t_s \qquad \text{IV-17}$$

and

$$ST_s = 24 - ST_r + 2\Delta t_s \qquad \text{IV-18}$$

4.3.2 Radiation Scattering and Absorption

The atmospheric transmission term, a_t, is given by Water Resources Engineers, Inc. (1967) as:

$$a_t = \frac{a'' + 0.5\ (1 - a' - d)}{1 - 0.5\ R_s\ (1 - a' + d)} \qquad \text{IV-19}$$

in which a" is the mean atmospheric transmission coefficient after scattering and absorption, given by:

$$a'' = \exp \{ - [0.465 + 0.0408\, P_{wc}]$$
$$[0.179 + 0.421 \exp(-0.721\, \theta_{am})]\, \theta_{am}\} \qquad \text{IV-20}$$

where θ_{am} is the optical air mass given by the expression:

$$\theta_{am} = \frac{\exp(-Z/2531)}{\sin\alpha + 0.15\left(\frac{180\alpha}{\pi} + 3.885\right)^{-1.253}} \qquad \text{IV-21}$$

in which

Z = elevation of the site in feet

α = sun's altitude in radians, given by:

$$\alpha = \arcsin\left[\sin\frac{\pi\phi}{180}\sin\delta + \cos\frac{\pi\phi}{180}\cos\delta\cos\frac{\pi t}{12}\right] \qquad \text{IV-22}$$

in which t is the hour angle, described by an equation similar to equation IV-11 and IV-12.

P_{wc} in equation IV-20 is the mean daily precipitable water content in the atmosphere, given by the expression:

$$P_{wc} = 0.00614 \exp(0.0489 T_d) \qquad \text{IV-23}$$

where T_d is the dewpoint in °F, which can be obtained from the expression:

$$T_d = \ln[(e_a + 0.0837)/0.1001]/0.03 \qquad \text{IV-24}$$

where e_a is the water vapor pressure of the air.

The mean atmospheric coefficient, a', can also be represented by an equation of the form of equation IV-20 as:

$$a' = \exp\{-[0.465 + 0.0408\, P_{wc}]\, [0.129 + 0.171 \exp(-0.880\, \theta_{am})]\, \theta_{am}\} \qquad \text{IV-25}$$

Dust attenuation of the solar radiation flux, which is represented in equation IV-19 by the quantity d, varies with optical air mass, season of the year, and geographic location. Water Resources Engineers, Inc. (1967) gives a range of 0-0.13 for several locations.

4.3.3 Cloudiness

The dampening effect on the solar radiation flux is given by Water Resources Engineers, Inc. (1967) as

$$C_s = 1.0 - 0.65\, C_L^2 \qquad \text{IV-26}$$

where C_L is the decimal fraction of the sky covered. Water Resources Engineers, Inc. (1967) reports that equation IV-26 gives satisfactory results except for heavy overcast conditions, i.e., when C_L approaches 1.0.

4.3.4 Reflectivity

The reflection coefficient, R_s, can be approximately computed as a function of the solar altitude, α, by Anderson's (1954) empirical formula:

$$R_s = A\alpha^B \qquad \text{IV-27}$$

where α is in degrees, and A and B are functions of cloudiness, C_L. Values for A and B given by Anderson (1954) are shown in Table IV-2.

TABLE IV-2
EMPIRICAL COEFFICIENTS FOR DETERMINING R_s
After Anderson (1954)

Cloudiness C_L	0 Clear		0.1 - 0.5 Scattered		0.6 - 0.9 Broken		1.0 Overcast	
Coefficients	A	B	A	B	A	B	A	B
	1.18	-0.77	2.20	-0.97	0.95	-0.75	0.35	-0.45

4.4 LONG-WAVE ATMOSPHERIC RADIATION

The long-wave radiation emitted by the atmosphere varies directly with the moisture content of the atmosphere. Although it is primarily dependent on air temperature and humidity, it can also be affected by ozone, carbon dioxide, and possibly other materials in the atmosphere. Anderson (1954) indicated that the amount of atmospheric radiation is also significantly affected by cloud height. The amount of long-wave atmospheric radiation that is reflected is approximately a constant fraction of the incoming radiation, found by Anderson (1954) to be approximately 0.03.

The net atmospheric radiation flux can be expressed as:

$$H_{an} = [2.89 \times 10^{-6}]\ \sigma\ (T_a + 460)^6\ (1.0 + 0.17C_L^2)(1-R_L) \qquad \text{IV-28}$$

where

H_{an} = net long-wave atmospheric radiation flux, Btu/ft^2-hr

σ = Stefan-Boltzman constant, 1.73×10^{-9} Btu/ft^2/hr/°Rankine^4

T_a = air temperature at a level 6 feet above the water surface, °F

R_L = reflectivity of the water surface for atmospheric radiation = 0.03

C_L = cloudiness, fraction of cloud cover

4.5 WATER SURFACE BACK RADIATION

The third source of radiation transfer through the air-water interface is long-wave back radiation from the water surface, H_b, which represents a loss of heat from the water. It can be seen from Table IV-1 that back radiation accounts for a substantial portion of the heat loss from a body of water. This loss is expressed by the Stefan-Boltzman Fourth Power Radiation Law for a blackbody as:

$$H_b = 0.97\ \sigma\ (T_s + 460)^4 \qquad \text{IV-29}$$

where

H_b = water surface back radiation flux, Btu/ft^2-hr

T_s = water surface temperature, °F

Equation IV-29 can be linearized over a given temperature range as

$$H_b = \alpha_2 + \beta_2 T_s \qquad \text{IV-30}$$

where

α_2, β_2 = constants defined over the range 35 to 135 °F

In the steady-state temperature solution, this linearized version of the back radiation equation is used to allow the temperature dependent terms to be separated out of the equation. Sets of α_2, β_2 are specified for 21 5°F temperature intervals between 35°F and 135°F. For dynamic simulations the heat flux term calculations are based on the temperature at the beginning of the time step.

4.6 EVAPORATION

A water body also loses heat to the atmosphere by evaporation. Each pound of water that leaves as water vapor carries its latent heat of vaporization (approximately 1050 BTU at 60°F) plus its sensible heat. This significant heat loss due to evaporation can be expressed as:

$$H_e = \gamma H_L E + H_v \qquad \text{IV-31}$$

where

γ = specific weight of the water being evaporated, lb/ft^3

H_L = latent heat of vaporization, Btu/lb, given by

H_L = $1084 - 0.5\ T_s$

E = evaporation rate, ft/hr

H_v = sensible heat loss Btu/ft^2-hr

The evaporation rate, E, is most often expressed as

$$E = (a + bW)\ (e_s - e_a) \qquad \text{IV-32}$$

where

a,b = constants

W = wind speed, in mph, measured 6 feet above the water surface

e_s = saturation vapor pressure of the air, in. of Hg, at the temperature of the water surface, as given by

$$e_s = 0.1001 \exp (0.03\ T_s) - 0.0837$$

and

e_a = water vapor pressure, in. of Hg, at a height of 6 feet above the water surface, given as

$$e_a = e_{wb} - 0.000367\ P_a\ (T_a - T_{wb}) \left(1.0 + \frac{T_{wb} - 32}{1571}\right) \qquad \text{IV-34}$$

where

e_{wb} = saturation vapor pressure, in. of Hg, at the wet bulb temperature from the expression

$$e_{wb} = 0.1001 \exp (0.03\ T_{wb}) - 0.0837 \qquad \text{IV-35}$$

P_a = local barometric pressure, in. of Hg

T_{wb} = wet bulb air temperature, °F

T_a = dry bulb air temperature, °F

The literature contains a wide range of values for the evaporation constants a and b. Roesner (1969) reports that a good average value of a would be 6.8 x 10^{-4} ft/hr-in. of Hg, while b would best be represented by 2.7 x 10^{-4} ft/hr-in. of Hg.-mph.

To linearize the variation of evaporation rate with surface water temperature T_s, equation IV-34 is approximated over 5°F intervals as:

$$e_s = \alpha_1 + \beta_1\ T_s \qquad \text{IV-36}$$

Sets of α_1, β_1 are specified for twenty-one 5°F intervals between 35°F and 135°F. The linearized evaporation expression is used in the steady-state temperature solution.

The sensible evaporative heat loss can be expressed simply as:

$$H_V = c \gamma E (T_S - T_O) \qquad \text{IV-37}$$

where

c = heat capacity of water = 1 Btu/lb-°F

T_O = reference temperature, °F

Sensible heat loss is very small compared to the other heat loss components in the energy budget and thus is not included in the QUAL2E temperature computation.

4.7 CONDUCTION

Heat that is transferred between the water and the atmosphere due to a temperature difference between the two phases and not related to water vapor exchange is normally called conduction. Using the fact that transfer by conduction is a function of the same variables as evaporation, it is possible to arrive at a proportionality between heat conduction and heat loss by evaporation. This proportionality, known as Bowen's ratio, is expressed as:

$$B = \frac{H_C}{H_e} = C_B \left[\frac{T_S - T_a}{e_S - e_a}\right] \frac{P_a}{29.92} \qquad \text{IV-38}$$

where C_B is a coefficient $\cong$ 0.01.

By using Bowen's ratio, the rate of heat loss to the atmosphere by heat conduction, H_C, can be defined as:

$$H_C = \gamma H_L (a+bW) \left(0.01 \frac{P_a}{29.92}\right) (T_S - T_a) \qquad \text{IV-39}$$

For practical purposes, the ratio (P_a/29.92) can be taken as unity.

4.8 QUAL2E MODIFICATIONS FOR REACH VARIABLE LOCAL CLIMATOLOGY AND TEMPERATURE

Prior versions of QUAL-II and QUAL2E have assumed that the input variables for temperature simulation were uniform over the entire river basin (global inputs). These input variables consist of climatological, geographical, and heat balance information as follows: basin elevation, dust attenuation

coefficient, evaporation coefficients, dry and wet bulb air temperatures, atmospheric pressure, cloud cover, and wind speed. In the current version of QUAL2E most of these inputs, with the exception of the evaporation coefficients are reach variable. Thus, for systems in which variable ambient temperature and climatology may be important, for example in modeling rivers with large changes in elevation, different values for these factors may be supplied for each reach in the river. The overall heat balance computations are performed as described in Sections 4.1-4.7 of this chapter, using the reach specific values of each input variable. When reach variable temperature simulation inputs are used, a detailed temperature and heat balance summary is provided with the QUAL2E final output.

The user has a number of options in specifying the input variables for temperature simulation. Global values may be used (all reaches having the same values for each of the temperature simulation inputs), or different input values may be explicitly specified for each reach in the system. In the case where reach specific values of atmospheric pressure are not known or available, QUAL2E has the capability of estimating the value of atmospheric pressure for each reach from its elevation and air temperature. These estimates are computed from the ideal gas law integrated over the change in elevation relative to a datum (Plate, 1982).

$$P = P_o \, e^{[-(g/RT)(z - z_o)]} \qquad \text{IV-40}$$

Where:

P = atmospheric pressure at elevation z (in Hg),

g = gravitational constant (32.2 ft/sec^2),

R = gas law constant (1715 ft^2/sec^2-^{o}R),

T = dry bulb air temperature (^{o}R),

z = elevation of reach (ft),

z_o, P_o = datum elevation and pressure, respectively,

The principal assumptions used in deriving Eq. IV-40 are that air temperature and specific humidity are constant. Thus, the value of the gas constant, R, is that for dry air and the value of dry bulb air temperature, T, is the average of the dry bulb temperatures at elevations z and z_o. Although refinements to this methodology are possible, they were deemed premature until more experience with this option is obtained. If the reach variable values of atmospheric pressure are computed from Eq. IV-40, they are echo-printed with the QUAL2E output.

5. COMPUTATIONAL REPRESENTATION

5.1 PROTOTYPE REPRESENTATION

To expand upon the basic conceptual representation presented in Sections 1 and 2, QUAL2E permits any branching, one-dimensional stream system to be simulated. The first step involved in approximating the prototype is to subdivide the stream system into reaches, which are stretches of stream that have uniform hydraulic characteristics. Each reach is then divided into computational elements of equal length so that all computational elements in all reaches are the same length. Thus, all reaches must consist of an integer number of computational elements.

There are seven different types of computational elements:

1. Headwater element
2. Standard element
3. Element just upstream from a junction
4. Junction element
5. Last element in system
6. Input element
7. Withdrawal element

Headwater elements begin every tributary as well as the main river system, and as such, they must always be the first element in a headwater reach. A standard element is one that does not qualify as one of the remaining six element types. Because incremental flow is permitted in all element types, the only input permitted in a standard element is incremental flow. A type 3 element is used to designate an element on the mainstem that is just upstream of a junction. A junction element (type 4), has a simulated tributary entering it. Element type 5 identifies the last computational element in the river system (downstream boundary); there should be only one element type 5. Element types 6 and 7 represent elements which have inputs (waste loads and unsimulated tributaries) and water withdrawals, respectively.

River reaches, which are aggregates of computational elements, are the basis of most data input. Hydraulic data, reaction rate coefficients, initial conditions, and incremental flow data are constant for all computational elements within a reach.

5.2 FORCING FUNCTIONS

Forcing functions are the user specified inputs that drive the system being modeled. These inputs are specified in terms of flow, water quality characteristics, and local climatology. QUAL2E accommodates four types of hydraulic and mass load forcing functions in addition to local climatological factors--headwater inputs, point sources or withdrawals, incremental inflow/outflow along a reach, and the (optional) downstream boundary concentration.

1. Headwater Inputs - Headwater inputs are typically the upstream boundary conditions at the beginning of the system. They are the conditions required to generate the solution of the mass balance equations for the first computational element in each headwater reach. Headwaters are also the source of water for flow augmentation.

2. Point Sources and/or Withdrawals - These loads are used to represent point source discharges into the system (i.e., sewage and industrial waste, or storm water runoff) and losses from the system resulting from diversions. In QUAL2E point source discharges may represent either raw or treated waste loads. If raw waste loads are used, the effect of treatment can be simulated by applying a specific fractional removal for carbonaceous BOD to each point source load.

3. Incremental Inflow - QUAL2E has the capability to handle flow uniformly added or removed along a reach. The total flow increment along a reach is apportioned equally to all computational elements in the reach. This feature can be used to simulate the effects of non-point source inputs to the system, or the effect of loss of stream flow to the groundwater.

4. Downstream Boundary Concentration (optional) - QUAL2E has the capability of incorporating known downstream boundary concentrations of the water quality constituents into the solution algorithm. This feature is useful in modeling systems with large dispersion in the lower reaches (e.g., estuaries). When downstream boundary concentrations are supplied, the solution generated by QUAL2E will be constrained by this boundary condition. If the concentrations are not provided, the constituent concentrations in the most downstream element will be computed in the normal fashion using the zero gradient assumption (see Section 5.4.3).

Local climatological data are required for the simulation of algae and temperature. The temperature simulation uses a heat balance across the air-water interface and thus requires values of wet and dry bulb air temperatures, atmospheric pressure, wind velocity, and cloud cover. The algal simulation requires values of net solar radiation. For dynamic simulations, these climatological data must be input at regular time intervals over the

course of the simulation and are applied uniformly over the entire river basin. For modeling steady-state temperature and algae, average daily local climatological data are required and may vary spatially over the basin by reach.

5.3 MODEL LIMITATIONS

QUAL2E has been developed to be a relatively general program; however, certain dimensional limitations have been imposed upon it during program development. These limitations are as follows:

Reaches: a maximum of 25

Computational elements: no more than 20 per reach or 250 in total

Headwater elements: a maximum of 7

Junction elements: a maximum of 6

Input and withdrawal elements: a maximum of 25 in total

(Note: These limitations may be modified, if necessary, by the user by altering the PARAMETER statement specifications in file MAIN.VAR of the program and recompiling.

QUAL2E can be used to simulate any combination of the following parameters or groups of parameters.

1. Conservative minerals (up to three at a time)
2. Temperature
3. BOD
4. Chlorophyll a
5. Phosphorus cycle (organic and dissolved)
6. Nitrogen cycle (organic, ammonia, nitrite, and nitrate)
7. Dissolved oxygen
8. Coliforms
9. An arbitrary nonconservative constituent

All parameters can be simulated under either steady-state or dynamic conditions. If either the phosphorus cycle or the nitrogen cycle are not being simulated, the model presumes they will not limit algal growth.

5.4 Numerical Solution Technique

At each time step and for each constituent, Equation II-3 can be written I times, once for each of the I computational elements in the network. Because it is not possible to obtain analytical solutions to these equations under most prototype situations, a finite difference method is used--more specifically, the classical implicit backward difference method (Arden and Astill, 1970; Smith, 1966; and Stone and Brian, 1963).

The general basis of a finite difference scheme is to find the value of a variable (e.g., constituent concentration) as a function of space at a time step n+1 when its spatial distribution at the nth time step is known. Time step zero corresponds to the initial condition. Backward difference or implicit schemes are characterized by the fact that all spatial derivatives ($\partial/\partial x$) are approximated in difference form at time step n+1.

5.4.1 Formulation of the Finite Difference Scheme

The finite difference scheme is formulated by considering the constituent concentration, C, at four points in the mnemonic scheme as shown in Figure V-1.

Three points are required at time n+1 to approximate the spatial derivatives. The temporal derivative is approximated at distance step i.

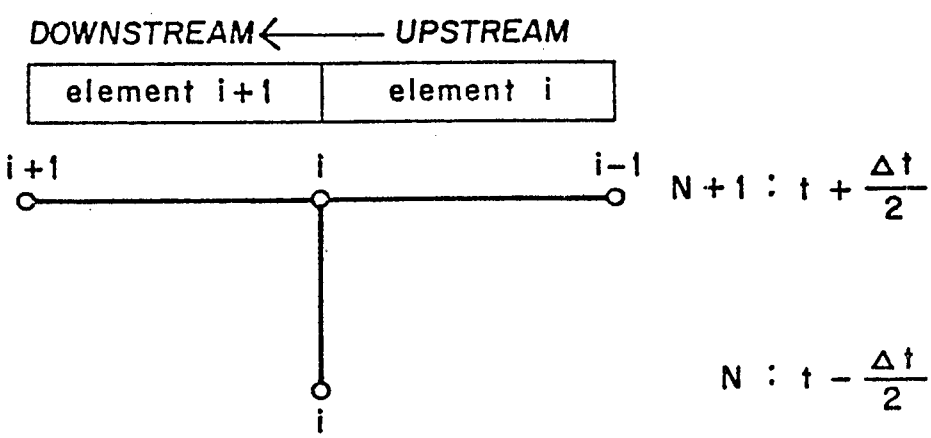

Figure V-1. Classical Implicit Nodal Scheme

Equation II-3 can be written in finite difference form in two steps. First, the advection and diffusion terms are differentiated once with respect to x, giving:

$$\frac{\partial C_i}{\partial t} = \frac{(AD_L \frac{\partial C}{\partial x})_i - (AD_L \frac{\partial C}{\partial x})_{i-1}}{V_i} - \frac{(A\,\bar{u}\,C)_i - (A\,\bar{u}\,C)_{i-1}}{V_i}$$

$$+ \frac{dC_i}{dt} + \frac{s_i}{V_i} \qquad \text{V-1}$$

where

$$V_i = A_i \,\Delta\, x_i$$

Secondly, expressing the spatial derivative of the diffusion terms in finite difference and thence the time derivative of C in finite difference, there results:

$$\frac{C_i^{n+1} - C_1^{n}}{\Delta t} = \left(\frac{[(AD_L)_i]\, C_{i+1}^{n+1} - [(AD_L)_i]\, C_i^{n+1}}{V_i \,\Delta\, x_i}\right.$$

$$\left. - \frac{[(AD_L)_{i-1}]\, C_i^{n+1} - [(AD_L)_{i-1}]\, C_{i+1}^{n+1}}{V_i \,\Delta\, x_i}\right)$$

$$- \left(\frac{Q_i\, C_i^{n+1} - Q_{i-1}\, C_{i+1}^{n+1}}{V_i}\right) + r_i\, C_i^{n+1} + p_i + \frac{s_i}{V_i} \qquad \text{V-2}$$

In equation V-2, the term dC/dt is expressed as:

$$\frac{dC_i}{dt} = r_i\, C_i^{n+1} + p_i$$

where

r_i = first order rate constant

p_i = internal constituent sources and sinks (e.g., nutrient loss from algal growth, benthos sources, etc.)

Note that the dC/dt for every constituent modeled by QUAL2E can be expressed in this form.

If equation V-2 is rearranged in terms of the coefficients of C_{i-1}^{n+1}, C_i^{n+1}, and C_{i+1}^{n+1}, we obtain the equation:

$$a_i \; C_{i-1}^{n+1} + b_i \; C_i^{n+1} + c_i \; C_{i+1}^{n+1} = Z_i \qquad \text{V-3}$$

where

$$a_i = - \left[(AD_L)_{i-1} \frac{\Delta t}{V_i \; \Delta x_i} + \frac{Q_{i-1} \; \Delta t}{V_i}\right]$$

$$b_i = 1.0 + \left[(AD_L)_i + (AD_L)_{i-1}\right] \frac{\Delta t}{V_i \; \Delta x_i} + Q_i \frac{\Delta t}{V_i} - r_i \; \Delta t$$

$$c_i = -\left[(AD_L)_i \frac{\Delta t}{V_i \; \Delta x_i}\right]$$

$$Z_i = C_i^n + \frac{s_i \; \Delta t}{V_i} + p_i \; \Delta t$$

The values of a_i, b_i, c_i, and Z_i are all known at time n, and the C_i^{n+1} terms are the unknowns at time step n+1.

In the case of a junction element with a tributary upstream element, the basic equation becomes:

$$a_i \; C_{i-1}^{n+1} + b_i \; C_i^{n+1} + c_i \; C_{i+1}^{n+1} + d_j \; C_j^{n+1} = Z_i \qquad \text{V-4}$$

where

$$d_j = - \left[(AD)_j \frac{\Delta t}{V_i \; \Delta x_i} + \frac{Q_j \; \Delta t}{V_i}\right]$$

j = the element upstream of junction element i

C_j^{n+1} = concentration of constituent in element j at time n+1

It can be seen that the d_j term is analogous to the a_i term. Both terms account for mass inputs from upstream due to dispersion and advection.

Under steady-state conditions, $\frac{\partial C_i}{\partial t} = 0$ in equation V-1. Working through the finite difference approximations and rearranging terms as before, the steady-state version of equation V-3 is derived:

$$a_i \, C_{i-1}^{n+1} + b_i \, C_i^{n+1} + c_i \, C_{i+1}^{n+1} = Z_i \qquad \text{V-5}$$

where

$$a_i = -\left[\frac{(AD_L)_{i-1}}{V_i \Delta x_i} + \frac{Q_{i-1}}{V_i}\right]$$

$$b_i = \left[\frac{(AD_L)_i}{V_i \Delta x_i} + \frac{(AD_L)_{i-1}}{V_i \Delta x_i} + \frac{Q_i}{V_i} - r_i\right]$$

$$c_i = \left[\frac{(AD_L)_i}{V_i \Delta x_i}\right]$$

$$Z_i = \frac{S_i}{V_i} + P_i$$

Note that equation V-5 is the same as equation V-3, with three changes:

- o $\Delta t = 1.0$
- o the constant 1.0 in $b_i = 0.0$
- o the initial concentration C_i^n in $Z_i = 0.0$

5.4.2 Method of Solution

Equations V-3 and V-5 each represent a set of simultaneous linear equations whose solution provides the values of C_i^{n+1} for all i's. Expressed in matrix form, this set of equations appears as:

$$
\begin{bmatrix}
b_1 & c_1 & & & & & \\
a_2 & b_2 & c_2 & & & & \\
 & a_3 & b_3 & c_3 & & & \\
 & & \cdots & & & & \\
 & & & a_i & b_i & c_i & \\
 & & & & \cdots & & \\
 & & & & & a_{I-1} & b_{I-1} & c_{I-1} \\
 & & & & & & a_I & b_I
\end{bmatrix}
\times
\begin{bmatrix}
C_1^{n+1} \\ C_2^{n+1} \\ C_3^{n+1} \\ \vdots \\ C_i^{n+1} \\ \vdots \\ C_{I-1}^{n+1} \\ C_I^{n+1}
\end{bmatrix}
=
\begin{bmatrix}
Z_1 \\ Z_2 \\ Z_3 \\ \vdots \\ Z_i \\ \vdots \\ Z_{I-1} \\ Z_I
\end{bmatrix}
\qquad \text{V-6}
$$

The left matrix is a tri-diagonal matrix. An efficient method that readily lends itself to a computer solution of such a set of equations is:

Divide through the first equation in V-6 by b_1 to obtain:

$$C_1^{n+1} + W_1 \, C_2^{n+1} = G_1 \qquad \text{V-7}$$

where

$$W_1 = c_1/b_1 \text{ and } G_1 = Z_1/b_1.$$

Combine the expression for b_i (see V-3) and the second equation in V-6 to eliminate a_2 and the result is:

$$C_2^{n+1} + W_2 \, C_3^{n+1} = G_2 \qquad \text{V-8}$$

where

$$W_2 = \frac{c_2}{b_2 - a_2 \, W_1} \text{ and } G_2 = \frac{Z_2 - a_2 \, G_1}{b_2 - a_2 \, W_1}$$

Combine equation V-8 and the third equation in V-6 to eliminate a_3 and the result is:

$$C_3^{n+1} + W_3\, C_4^{n+1} = G_3 \qquad \text{V-9}$$

where

$$W_3 = \frac{c_3}{b_3 - a_3\, W_2} \quad \text{and } G_3 = \frac{Z_3 - a_3\, G_2}{b_3 - a_3\, W_2}$$

Proceed through the equations, eliminating a_i and storing the values of W_i and G_i given by:

$$W_i = \frac{c_i}{b_i - a_i\, W_{i-1}}, \; i = 2, 3, \ldots, I \qquad \text{V-10}$$

and

$$G_i = \frac{Z_i - a_i\, G_{i-1}}{b_i - a_i\, W_{i-1}}, \; i = 2, 3, \ldots, I \qquad \text{V-11}$$

The last equation is solved for C_I^{n+1} by

$$C_I^{n+1} = G_I \qquad \text{V-12}$$

Solve for C_{i-1}^{n+1}, C_{i-2}^{n+1}, . . . , C_1^{n+1} by back substitution.

$$C_i^{n+1} = G_i - W_i\, C_{i-1}^{n+1}, \; i = I-1, I-2, \ldots, 1 \qquad \text{V-13}$$

5.4.3 Boundary Conditions

In most situations of interest, transport is unidirectional in nature, i.e., there is no significant transport upstream. Therefore, the concentration at some point just upstream from the beginning or end of the stream reach of interest can be used as the boundary condition.

5.4.3.1 Upstream Boundary (Headwater Elements)

For headwater elements there is no upstream, i-1, element. Thus, the headwater driving force is substituted in Equation V-3 for the upstream concentration C_{i-1}. Because the headwater concentrations are fixed, they are incorporated on the right hand side of Equation V-3 in the known term Z_i, for headwater elements as follows.

$$Z_1 = C_1^n + \frac{s_1 \Delta t}{V_1} + p_1\, \Delta t - a_1\, C_o \qquad \text{V-14}$$

where C_0 is the upstream boundary condition (headwater concentration).

5.4.3.2 Downstream Boundary (Last Element in the System)

QUAL2E has two options for modeling the downstream boundary. One uses a zero gradient assumption; the other incorporates fixed downstream constituent concentrations into the solution algorithm.

Zero Gradient Assumption (Arden and Astill, 1970)--For the last computational element in the system, there is no downstream, i+1, element. At this boundary, a zero gradient assumption is made that replaces C_{i+1} with C_{i-1}. In this manner, the downstream boundary acts as a mirror to produce a zero gradient for the concentration of the constituent variable. The coefficient a_i, therefore, is modified to include the dispersion effect normally found in the coefficient c_i for the last element in the system. Thus, the equation for a_i in V-3 becomes:

$$a_I = -[((AD_L)_{I-1} + (AD_L)_I) \frac{\Delta t}{V_I \Delta x_I} + \frac{Q_{I-1}\Delta t}{V_I}] \qquad \text{V-15}$$

and

$$c_I = 0 \qquad \text{V-16}$$

where I = index of the downstream boundary element

Fixed Downstream Constituent Concentrations--For this boundary option, the user supplies known downstream boundary concentrations C_{LB} for each water quality constituent. Thus, the value of C_{i+1} in Equation V-3 becomes

$$C_{I+1} = C_{LB} \qquad \text{V-17}$$

Because the boundary concentrations are known in this option, they are incorporated on the right hand side of Equation V-3 in the known term Z_i for the downstream boundary element then results as

$$Z_I = C_I^n + \frac{s_I \Delta t}{V_I} + p_I \Delta t - c_I C_{LB} \qquad \text{V-18}$$

6. UNCERTAINTY ANALYSIS WITH QUAL2E

6.1 INTRODUCTION

Uncertainty analysis for model simulations is assuming a growing importance in the field of water quality management. The impetus for this concern is provided by recent public awareness over health risks from improper disposal of toxic wastes as well as by the continuing emphasis within EPA on risk assessment. One of the first steps in the chain of risk assessment is the quantification of the error in predicting water quality. Unfortunately, uncertainty analysis of water quality model forecasts has not received as much attention in practice as has the prediction of expected (average) values.

Uncertainty analysis has been the subject of much discussion in the ecosystem modeling literature (Rose and Swartzman, 1981 and O'Neill and Gardner, 1979). In the water resources literature, lake eutrophication models have been used to compare various methods of uncertainty analysis (Reckhow, 1979; Scavia et al., 1981; and Malone et al., 1983). The methodologies described in this chapter represent a systematic approach to uncertainty analysis for the general purpose stream water quality model QUAL2E. The objective is to provide some of the tools for incorporating uncertainty analysis as an integral part of the water quality modeling process. The QUAL2E model was chosen for this application because it is a general purpose computer code, widely used by consultants and state regulatory agencies in waste load allocation and other planning activities. The resulting uncertainty model is named QUAL2E-UNCAS.

6.2 QUAL2E-UNCAS

Three uncertainty analysis techniques can be employed in QUAL2E-UNCAS--sensitivity analysis, first order error analysis, or monte carlo simulation. The user is provided this array of options for flexibility, because the methods differ in their assumptions and will not always agree with each other. Discrepancies may be explained by errors in the first order approximation or by errors due to biased variance calculations. Monte carlo simulation has the advantage of output frequency distributions, but it carries a high computational burden. First order error propagation provides a direct estimate of model sensitivity, but that variability is usually more indicative of the variance of model components than of the dynamics of the model structure.

The methodology provided in QUAL2E-UNCAS allows the model user to perform uncertainty analysis with relative ease and efficiently manages the output from the analysis. Although the application is specific to the QUAL2E model, the methodology is general. The preprocessing and postprocessing algorithms used are, in principle, applicable to many water quality models. The preprocessor allows the user to select the variables and/or parameters to be altered, without having to manually restructure the input data set. This task is performed automatically by the preprocessor for as many uncertainty conditions as the user wishes to simulate. The postprocessor stores and manipulates only the output of interest, thus reducing potential voluminous output. The user must select the important variables and locations in the stream network where uncertainty effects are desired for analysis.

6.2.1 Sensitivity Analysis

In normal usage sensitivity analysis is accomplished using a one-variable-at-a-time approach (Duke, 1976). Sensitizing more than one input variable at a time is an attractive method for assessing their interaction effects on the output variable. When many input parameters and variables are altered, however, the number of combinations to be investigated becomes large, thus complicating interpretation of the results. Experimental design strategies can be efficiently applied in this situation to elicit main and interaction effects of input variables.

With the sensitivity analysis option in QUAL2E-UNCAS, the user may vary the inputs singly, in groups, or using factorial design strategies. The input requirements for sensitivity analysis consist of identifying the input variables to be perturbed and specifying the magnitude of the perturbation. The output for each sensitivity simulation consists of the changes (i.e., the sensitivities) in the value(s) of each output variable (ΔY) resulting from the changes in the value(s) of the input variables (ΔX). This output is provided in tabular format, similar to the QUAL2E final summary, except that the table entries are sensitivities rather than the values of the output variables.

QUAL2E-UNCAS also has the capability of assessing the main and interaction effects of input variables on various output variables by sensitizing the inputs according to 2-level factorial design strategies. Currently QUAL2E-UNCAS accommodates only 2-variable (i.e., 2^2) and 3-variable (i.e., 2^3) factorial designs. As in normal sensitivity analysis, the user specifies the names of the input variables to be perturbed and the magnitude of the perturbation. The factorial design computations for main and interaction effects are performed using standard statistical procedures (Box *et al.*, 1978; and Davies, 1967).

Because QUAL2E computes values of each output variable for every computational element in the system, the factorial design output would be voluminous if performed for each element. Thus, the user must specify particular locations (maximum of 5) in the basin where this analysis is to be performed. The critical locations, such as the dissolved oxygen sag point, or the location below the mixing zone of a tributary junction or

point discharge, are usually included among those chosen for analysis.

6.2.2 First Order Error Analysis

First order error analysis utilizes the first order approximation to the relationship for computing variances in multivariate situations. The input variables are assumed to act independently (covariances are ignored) and the model to be linear (the higher order terms of the Taylor expansion are omitted). The first order approximations to the components of output variance is often good (Walker, 1982).

The QUAL2E-UNCAS output for first order error analysis consists of two parts--(a) a tabulation of normalized sensitivity coefficients and (b) a listing of the components of variance. The normalized sensitivity coefficients represent the percentage change in the output variable resulting from a 1 percent change in each input variable, and are computed as follows.

$$S_{ij} = (\Delta Y_j/Y_j)/(\Delta X_i/X_i) \qquad \text{VI-1}$$

where:

S_{ij} = normalized sensitivity coefficient for output Y_j to input X_i,

X_i = base value of input variable,

ΔX_i = magnitude of input perturbation,

Y_j = base value of output variable,

ΔY_j = sensitivity of output variable.

The components of variance for each output variable Y are the percentages of output variance attributable to each input variable X, computed in the following manner.

$$Var(Y_j) = \sum_i Var(X_i)(\Delta Y_j/\Delta X_i)^2 \qquad \text{VI-2}$$

where:

$Var(Y_j)$ = variance of output variable Y_j,

$Var(X_i)$ = variance of input variable X_i,

Y_j and X_i are as defined in Eq. VI-1.

As can be seen from Eq. VI-2, each term in the summation is a component of the variance of the output variable, Y_j, contributed by the input variable, X_i. The components of the output variance, $Var(Y_j)$, represent a weighting of the input variances, $Var(X_i)$, by the square of the sensitivity of model output to input, $(\Delta Y_j/\Delta X_i)$. Thus, a particular input variable may be a large (small) contributor to the output variance if it has either a large (small) input variance or a large (small) sensitivity coefficient, or both. Performing multiple first order error analyses with differing values of X_i will provide an estimate of the strength of model nonlinearities. Outputs that are linear in X_i will have unchanging sensitivity coefficients, $(\Delta Y_j/\Delta X_i)$, as ΔX_i changes.

In normal applications of first order error analysis, all of the input variables are perturbed. In this manner, the contributions to output variance from all input variables are computed. QUAL2E-UNCAS has the capability, however, of constraining the number of input variables to be included in a first order analysis. This limitation is achieved by allowing the user to specify the generic group of inputs (i.e., "hydraulic variables," "reaction coefficients," "point load forcing functions," etc.) that are to be perturbed in the analysis.

The input requirements for first order error analysis consist of (a) the magnitude of the input perturbation, ΔX_i, and (b) the value of the variance of the input variable, $Var(X_i)$. The value of ΔX_i (default value is 5%, i.e., $\Delta X_i/X_i = 0.05$) is specified by the user and applied uniformly over all inputs for the purpose of computing sensitivities. Default values for the input variances are provided with the QUAL2E-UNCAS model (see Section 6.3); however, users are cautioned to use values appropriate to their modeling application. Finally, as in the factorial design option, the user must choose the locations (maximum of 5) in the basin at which the first order error analysis for the output variables is to be performed.

6.2.3 Monte Carlo Simulation

Monte carlo simulation is a method for numerically operating a complex system that has random components. Input variables are sampled at random from pre-determined probability distributions (with or without correlation) and the distribution of output values from repeated simulations is analyzed statistically. The validity of this method is not affected by nonlinearities in the water quality model.

The monte carlo simulation computations in QUAL2E-UNCAS provide summary statistics and frequency distributions for the state variables at specific locations in the system. The summary statistics include: mean (base and simulated), bias, minimum, maximum, range, standard deviation, coefficient of variation, and skew coefficient. Frequency and cumulative frequency distributions are tabulated in increments of one-half a standard deviation. Comparison of the standard deviation estimates from monte carlo simulations with those from first order error analysis provide an indication of the extent of model nonlinearities. Cumulative frequency distributions are useful in evaluating overall dispersion in the model predictions and in assessing the likelihood of violating a water quality standard.

The input requirements for the monte carlo simulation option in QUAL2E-UNCAS consist of (a) the variance of the input variable, $Var(X_i)$, (b) the probability density function of the input variable, and (c) the number of simulations to be performed. Specification of input variances is done in the same manner as that for first order error analysis. Currently there are two options for the input probability density functions: normal and log-normal. The distribution for each input variable can be specified from either of these options. The default option is the normal distribution. The number of monte carlo simulations must be large enough to avoid large errors in the estimated values of output variance, yet small enough to avoid unduly long computation times. Preliminary experience with UNCAS indicates that about 2000 simulations are required to achieve estimates of output standard deviations with 95% confidence intervals of 5%.

QUAL2E-UNCAS assumes that all inputs act independently. Thus, each input is randomized independently from the others. In normal usage, all input variables are randomized in monte carlo simulation. As in the case of first order error analysis, however, the user may constrain the number of inputs to be varied by specifying that only certain generic groups of inputs be randomized. Lastly, the user must specify the locations (maximum of five) in the basin at which monte carlo simulation results are to be tabulated.

6.3 Input Variable Variances

One of the fundamental requirements for performing uncertainty analyses in water quality modeling is a knowledge of the uncertainty characteristics of the model inputs. Information on model input uncertainty is not widely available in the literature, although recent articles show an increasing tendency to publish such information (Kennedy and Bell, 1986). Three reports (Koenig, 1986; NCASI, 1982; and McCutcheon, 1985) have been examined to compile an uncertainty data base for use with QUAL2E-UNCAS. A summary of this information is shown in Table VI-1. These values represent ranges in the uncertainty of model inputs caused by such factors as spatial variation, temporal variation, sampling error, analytical error, and bias in measurement or estimation technique.

In QUAL2E-UNCAS, uncertainty information is provided in two forms: (a) the value of the variance of the input variables and (b) the specification of a probability density function for each input. The model reads this information, as required, from a data file named "INVAR.DAT." An example of this file, containing a set of default values for all QUAL2E inputs, is provided with the QUAL2E-UNCAS model. These data are consistent with the typical ranges of uncertainty shown in Table VI-1 and are provided <u>only</u> as a guide for <u>beginning</u> the process of estimating the uncertainty associated with QUAL2E input variables. All users are <u>CAUTIONED</u> not to assume that these values are appropriate to all modeling situations. The burden of verifying and confirming input variance estimates for a particular application lies with the user. Efforts to develop a better understanding of input variable uncertainties are continuing.

TABLE VI-1
SUMMARY OF QUAL2E INPUT VARIABLE UNCERTAINTIES

Input Variable or Parameter	QUAL2E Data Type	Relative Standard Deviation, % Low	Typical	High
Algae, Nutrient, Light Coefficients	1A	5	10-20	50
Temperature Coefficients	1B	1	2-5	10
Hydraulic Data	5	1	5-15	50
Temperature/LCD	5A	1	2-10	20
Reaction Coefficients	6	5	10-25	100
Constituent Concentrations	8,10,11			
Temperature		1	2-3	5
DO		2	5-10	15
CBOD		5	10-20	40
N Forms		10	15-30	75
P Forms		10	15-40	75
Algae		5	10-25	50
Coliform		20	25-50	100
Conservative Minerals		1	5-10	15

Summary of data compiled from APHA, 1985; Koenig, 1986; McCutcheon, 1985; and NCASI, 1982a.

In the general case, QUAL2E-UNCAS accepts input variability information in relative rather than absolute units. Thus, the input perturbations for first order error analysis and input variances for first order analysis and monte carlo simulation are supplied as percent perturbation and coefficient of variation, respectively. The transformation equations between relative and absolute units are:

$$\Delta X_i = RP * X_i \qquad \text{VI-3}$$

$$Var(X_i) = (CV_i * X_i)^2 \qquad \text{VI-4}$$

where:

RP = relative perturbation for input variable X_i

CV = coefficient of variation for input variable X_i

X_i = value of input variable used in base case simulation

The specific manner in which the input data requirements are supplied to QUAL2E-UNCAS, including the data file "INVAR.DAT," are described in Appendix B-User Manual for QUAL2E-UNCAS.

6.4 PROGRAMMING STRATEGY IN QUAL2E-UNCAS

QUAL2E-UNCAS has been structured in a manner to minimize the tedious requirements for user adjustments to the QUAL2E input data file used in the base case simulation. The UNCAS portion of QUAL2E-UNCAS consists of two parts: (a) a package of 16 subroutines that perform the necessary book-keeping and computations as well as printing the uncertainty results and (b) one data file to decode and link UNCAS requests with QUAL2E. The user must supply two input data files--the first provides the general specifications for the uncertainty analysis to be performed, and the second contains the input variance information. In addition, during execution, UNCAS creates two disk files for storing and retrieving the simulation information used in computing the uncertainty analysis results. The flow chart for UNCAS in Figure VI-1 shows the relationships among the subroutines and data files. Each component of the UNCAS package and its function is described in the following sections.

6.4.1 UNCAS Subroutines

a. Subroutine UNCAS. Subroutine UNCAS manages the execution of the uncertainty analysis simulations, computations, and output reports for QUAL2E-UNCAS. It calls the appropriate subroutines for reading the uncertainty data files, for screening the input and output variables for consistency and compatibility with the QUAL2E model options selected in

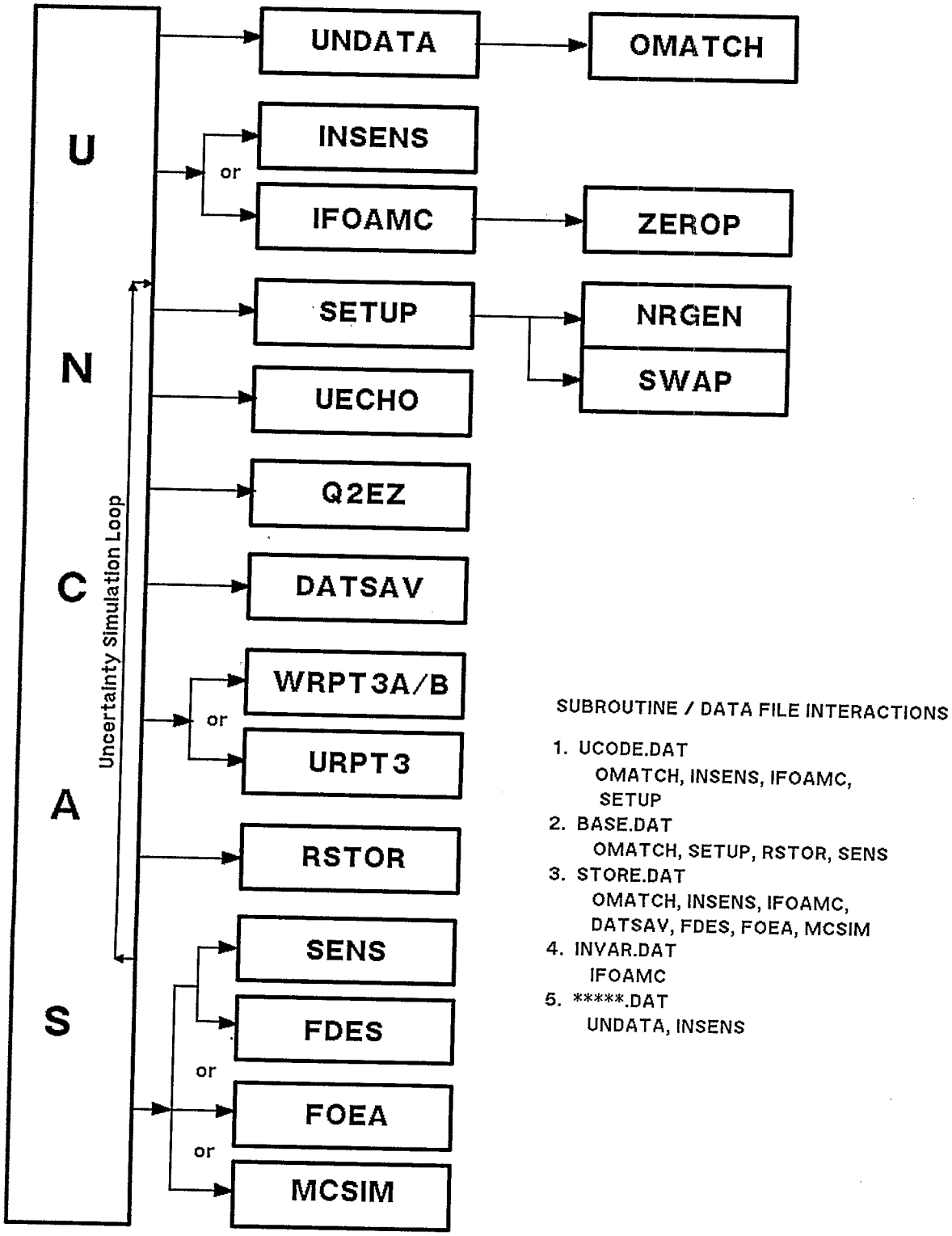

Figure VI-1 UNCAS Flow Diagram and Program Structure

the base case simulation, for performing the uncertainty simulations, and for computing and printing the appropriate uncertainty results.

b. Subroutine UNDATA. This subroutine reads the user-supplied input data file, *****.DAT, which contains the general specifications required for uncertainty analysis. It sets the appropriate flags and conditions for the type of uncertainty analysis to be performed.

c. Subroutine OMATCH. Subroutine OMATCH retrieves, purges, and stores (on disk file) the values of the appropriate output variables from the base case simulation. For sensitivity analysis, it saves the complete output from the base case simulation in the file BASE.DAT. For first order error analysis and monte carlo simulation it stores only the values of the output variables at the locations (maximum of five) in the basin where uncertainty results are desired and only for those that were modeled in the base case simulation (STORE.DAT). These data are subsequently used by subroutines FDES, FOEA, and MCSIM for their respective uncertainty analysis computations.

d. Subroutine INSENS. This subroutine controls the input specifications for sensitivity analysis. It reads the user-supplied input data file, *****.DAT, for the input variables that are to be perturbed for sensitivity analysis. It determines the total number of sensitivity simulations to be performed as well as the levels of all variables to be perturbed in each simulation.

e. Subroutine IFOAMC. Subroutine IFOAMC controls the input specifications for first order error analysis and for monte carlo simulation. It searches through a list of all input variables and purges (a) those variables that are not requested to be perturbed and (b) those input or model options that were not used in the base case simulation.

f. Subroutine ZEROP. This subroutine examines the numerical value of each input variable. If the value is such that the variable is not used in the base simulation (i.e., zero, or 1.0 for a temperature coefficient), the input variable is purged from the uncertainty analysis simulations.

g. Subroutine SETUP. Subroutine SETUP sets up the input condition for the current uncertainty simulation. Using the list of relevant inputs developed in either INSENS or IFOAMC, each input variable is perturbed or randomized as specified. It then calls subroutine SWAP to replace the base case value with the new value of the input variable.

h. Subroutine SWAP. This subroutine swaps the newly perturbed or randomized value of the input variable(s) for the base value(s). Swapping is done in memory by input data type and EQUIVALENCED arrays. Base case values are either saved in memory (sensitivity or first order options) or stored in the disk file BASE.DAT (monte carlo).

i. Subroutine NRGEN. This subroutine generates either normally or log-normally distributed random numbers for each input variable to be randomized in a monte carlo simulation. It uses a machine-specific random number generator.

j. Subroutine UECHO. Subroutine UECHO prints, as intermediate output, the input conditions of the current uncertainty simulation. This output includes the name of the input variable being altered and its base and perturbed value. This output is optional.

k. Subroutine Q2EZ. This subroutine is not new to UNCAS. It is that portion of the QUAL2E model that performs the simulation computations (see Figure I-1).

l. Subroutine DATSAV. This subroutine stores the appropriate output variables from each uncertainty simulation on the disk file STORE.DAT, for later processing by FDES, FOEA, or MCSIM.

m. Subroutines WRPT3A and WRPT3B. These subroutines are from the QUAL2E model, and write the final output summary for an UNCAS simulation. This output is optional and is not available in the monte carlo option.

n. Subroutine URPT3. Subroutine URPT3 writes a limited intermediate output summary of each uncertainty simulation. The summary consists of a comparison of (a) the steady state convergence characteristics for temperature and algae and (b) the base and new values of the output variables at the locations specified. This output is optional and is available only for the sensitivity analysis using factorial design and first order error analysis.

o. Subroutine RSTOR. This subroutine restores the value of the perturbed input to its base case value after completion of an uncertainty simulation. Thus, it prepares the input data for the next UNCAS simulation.

p. Subroutine SENS. Subroutine SENS writes the UNCAS final report for the sensitivity analysis option. It is similar in format to the QUAL2E output produced by subroutines WRPT3A/B, but consists of the change in output variable (sensitivity) resulting from the input perturbations of the sensitivity analysis.

q. Subroutine FDES. This subroutine performs the analysis of a factorially designed set of sensitivity analysis simulations. It writes the UNCAS final report for the factorial design, including the main and interaction effects of the sensitized input variables on each output variable at the user specified locations in the basin.

r. Subroutine FOEA. Subroutine FOEA performs the computations and writes the UNCAS final report for the first order error analysis option. The output consists of the normalized sensitivity coefficient matrix and the components of variance analysis for all inputs affecting each output variable at the user-specified locations in the basin.

s. Subroutine MCSIM. This subroutine performs the computations and writes the UNCAS final report for the monte carlo simulation option. The output consists of summary statistics, including base and simulated mean, bias, minimum, maximum, range, standard deviation, coefficient of variation, and skew coefficient as well as the frequency distribution (in one-half standard deviation steps) for each output variable at the user-specified locations in the basin.

6.4.2 Internal UNCAS DATA Files

a. File UCODE.DAT. This internal data file is supplied with the UNCAS package. It is a master file that contains information for identifying, matching, and screening the inputs to be modified in an UNCAS simulation. It also serves as the primary information source for linking UNCAS requests to the QUAL2E input data file.

b. File BASE.DAT. This internal data file stores information for the base case simulation. In the sensitivity analysis option, it stores the values of all the output variables for the QUAL2E base simulation. In the monte carlo simulation option, it stores the base values of the input variables that have been randomized. This data file is not used with the first order error analysis option.

c. File STORE.DAT. This internal data file stores the values of output variables at the user-specified locations for the base simulation and for each uncertainty simulation. When all uncertainty simulations are completed, these data are then used for the appropriate uncertainty output computations, i.e., factorial design for the sensitivity analysis option, or normalized sensitivity coefficients and components of variance for the first order error analysis option, or summary statistics and frequency distributions for the monte carlo option.

6.4.3 User-Supplied UNCAS Data Files

a. File INVAR.DAT. This data file contains the uncertainty information for each input varable in QUAL2E. These data consist of the variable name, its coefficient of variation, and its probability density function. An example of this file, containing a set of default data, is provided with the UNCAS package. Instructions for adjusting the uncertainty inputs to user specifications are provided in Appendix B--User Manual for QUAL2E-UNCAS.

b. File*****.DAT. This data file, named and prepared by the user, contains the general requirements for performing a QUAL2E-UNCAS simulation. This information consists, in part, of specifying the uncertainty analysis option, the type of intermediate output, any constraints on input variables to be modified, the output variables and locations for computing and printing uncertainty results, the number of monte carlo simulations, and the magnitude of the input variable perturbation. Instructions for assembling this data file are provided in Appendix B--User Manual for QUAL2E-UNCAS.

6.5 LIMITATIONS AND CONSTRAINTS FOR QUAL2E-UNCAS

Because of the general purpose nature of the QUAL2E and UNCAS computer codes, there are a few constraints in using the models that arise from the program structure and bookkeeping strategies used. These limitations are related to the level of detail the modeler may use in perturbing specific input variables.

1. Reach or Source Variable Inputs and Forcing Functions. In QUAL2E-UNCAS, input variables are treated in the general case rather than individually. For example, if the user wishes to perform uncertainty analysis on the CBOD rate coefficient, or the point load flows, then all input values (over the entire basin) of the rate coefficient and flows are perturbed. UNCAS does not have the capability of perturbing only one (or a few) of these inputs; i.e., the value of the CBOD rate coefficient in reach 3 or the flows for the second and fourth point loads. In short, the user specifies the name of the variable to be perturbed and the magnitude of the perturbation, then all values of that input variable are modified by the amount specified.

2. First Order Error Analysis. In first order error analysis, the user specifies the magnitude of the input perturbation, ΔX, for computing sensitivity coefficients. UNCAS applies this value of ΔX uniformly to all input variables. The modeler is not allowed to use one value of ΔX for one group of inputs and another value for a different group of inputs. (Note: The variance of each input variable can be specified uniquely, but as stated in subsection 1, that variance applies equally to all values of the variable in the basin.)

3. Input Variables Having a Numerical Value of Zero. Input variables whose values are determined by QUAL2E-UNCAS to be zero (either blanks in the input data file or an actual input value of zero) are assumed to be non-modeled inputs. Those variables will not be perturbed in any UNCAS simulation, and thus will not contribute to the uncertainty of the modeled output.

APPENDIX A

QUAL2E User Manual*,**

The following sections illustrate the coding of input data forms for the QUAL2E model.

A. Title Data

All 16 cards are required in the order shown. The first two are title cards, and columns 22 through 80 may be used to describe the basin, date of simulation, etc. Title cards 3 through 15 require either a "YES" or "NO" in columns 10 through 12 and are right justified. Note that each of the nitrogen and phosphorus series must be simulated as a group.

For each conservative substance (up to three) and the arbitrary non-conservative, the constituent name must be entered in columns 49 through 52. Corresponding input data units are entered in columns 57 through 60 (e.g., mg/L).

QUAL2E simulates ultimate BOD in the general case. If the user wishes to use 5-day BOD for input and output, the program will internally make the conversions to ultimate BOD. This conversion is based upon first order kinetics and a decay rate that can be specified by the user (Type 1 Data, line 8). If no value is specified, the program uses a default value of 0.23 per day, base e. It is recommended that users work only with ultimate BOD unless they have detailed knowledge of the river water and point source BOD kinetics. To use the 5-day BOD input/output option, write "5-DAY BIOCHEMICAL OXYGEN DEMAND" on the title 7 card beginning in column 22.

Card 16 must read ENDTITLE beginning in column 1.

---

*From: Modifications to the QUAL-2 Water Quality Model and User Manual for QUAL-2E Version 2.2. National Council of the Paper Industry for Air and Stream Improvement, Inc., New York, NY. NCASI Tech. Bulletin No. 457. April 1985. Used by permission.

**Further modified to include enhancements to QUAL2E resulting in Version 3.0 of the model, January 1987.

B. Data Type 1 - Program Control

Type 1 Data define the program control options and the characteristics of the stream system configuration, as well as some of the geographical/meteorological conditions for modeling temperature. There are a maximum of 17 Data 1 cards. The first 13 are required; the last four are necessary only if temperature is being simulated.

The QUAL2E program recognizes Type 1 Data by comparing the first four characters (columns 1-4) of each data card with a set of internally fixed codes. If a match between the code and characters occurs, then the data are accepted as supplied on the card by the user. If a match does not occur, then the program control options will revert to default values and the system variables for the unmatched codes will be assigned a value of zero (0.0).

The first seven cards control program options. If any characteristics other than those shown below are inserted in the columns 1 through 4, the actions described will not occur.

LIST - Card 1, list the input data.

WRIT - Card 2, write the intermediate output report, WRPT2 (see SUBROUTINE WRPT2 in the QUAL-II documentation report (Roesner et al., 1981), or NCASI Technical Bulletin No. 391).

FLOW - Card 3, use the flow augmentation option.

STEA - Card 4 shows this is a steady-state simulation. If it is not to be a steady-state, write DYNAMIC SIMULATION or NO STEADY STATE, and it is automatically a dynamic simulation.

TRAP - Card 5, cross-sectional data will be specified for each reach. If discharge coefficients are to be used for velocity and depth computations, write DISCHARGE COEFFICIENTS, or NO TRAPEZOIDAL CHANNELS, beginning in column 1.

PRIN - Card 6, local climatological data specified for the basin simulation will appear in the final output listing.

PLOT - Card 7, dissolved oxygen and BOD will be plotted in final output listing.

The next two cards provide further program flags and coefficients. This information is supplied in two data fields per card; columns 26-35, and 71-80. Note that the character codes in columns 1-4 must occur as shown in order for the data to be accepted by the program.

FIXE - Card 8, specifies: (a) whether the downstream boundary water quality constituent concentrations are fixed (user specified), and (b) the value of the rate coefficient for converting input 5-day BOD to ultimate BOD. A value of 1.0 (or larger) in columns 26-35 specifies that the downstream boundary water quality constituent concentrations will be supplied in Data Types 13 and 13A. A value less than 1.0 (usually 0.0 or blank) in these columns means that the downstream boundary concentrations are not user specified. In this case, the concentrations in the most downstream element (Type 5) will be computed in the normal fashion using the zero gradient assumption (Section 5.4.3.2). The second value on this card, columns 71-80, is the rate coefficient for converting 5-day to ultimate BOD. It is used only when 5-day BOD is being modeled (Title Card 7). If the columns are left blank, the model uses a default value of 0.23 per day, base e. Note that this conversion factor is applied to all input BOD_5 forcing functions (headwaters, incremental flows, point loads, and the downstream boundary condition).

INPU - Card 9, specifies whether the input and/or output will be in metric or English units. The value of 1.0 (or larger) in card columns 26-35 specifies metric input. The value of 1.0 (or larger) in card column 71-80 specifies metric units for output. Any value less than 1.0 (usually 0.0 or blank) will specify English units.

The next four cards describe the stream system. There are two data fields per card, columns 26-35 and 71-80. The program restrictions on the maximum number of headwaters, junctions, point loads, and reaches are defined by PARAMETER statements in the Fortran code. These statements may be modified by the user to accommodate a particular computer system or QUAL2E simulation application. The values of the constraints in the code as distributed by EPA are:

Maximum number of headwaters	7
Maximum number of junctions	6
Maximum number of point loads	25
Maximum number of reaches	25
Maximum number of computational elements	250

NUMB - Card 10, defines the number of reaches into which the stream is segmented and the number of stream junctions (confluences) within the system.

NUM_ - Card 11 shows the number of headwater sources and the number of inputs or withdrawals within the system. The inputs can be small streams, wasteloads, etc. Withdrawals can be municipal water supplies, canals, etc. NOTE: Withdrawals must have a minus sign ahead of the flow in Data Type 11 and must be specified as withdrawals in Data Type 4 by setting IFLAG = 7 for that element. Note, the code for Card 11 is 'NUM_ ' (read: NUM space) to distinguish it from the code for Card 10, NUMB.

TIME - Card 12 contains the time step interval in hours and the length of the computational element in miles (kilometers). The time step interval is used only for a dynamic simulation, thus it may be omitted if the simulation is steady-state.

MAXI - Card 13 provides information with different meanings depending on whether a dynamic or a steady-state simulation is being performed. For a dynamic simulation, the maximum route time is specified in columns 26-35. This value represents the approximate time in hours required for a particle of water to travel from the most upstream point in the system to the most downstream point. The time increment in hours for intermediate summary reports of concentration profiles is specified in columns 71-80. For a steady-state simulation, the maximum number of iterations allowed for solution convergence is entered in columns 26-35. The value in columns 71-80 may be left blank because it is not required in the steady-state solution.

The next four cards provide geographical and meteorological information and are required only if temperature is being simulated. There are two data fields per card, columns 26-35 and 71-80. Note: the character codes in columns 1-4 must occur as shown in order for the data to be accepted by the program.

LATI - Card 14 contains the basin latitude and longitude and represent mean values in degrees for the basin.

STAN - Card 15 shows the standard meridian in degrees, and the day of the year the (Julian date) simulation is to begin.

EVAP - Card 16, specifies the evaporation coefficients. Typical values are AE = 6.8×10^{-4} ft/hr-in Hg and BE = 2.7×10^{-4}ft/hr-in Hg-mph of wind for English units input, or AE = 6.2×10^{-6} m/hr-mbar and BE = 5.5×10^{-6} m/hr-mbar-m/sec of wind for metric units input.

ELEV - Card 17 contains the mean basin elevation in feet (meters) above mean sea level, and the dust attenuation coefficient (unitless) for solar radiation. The dust attenuation coefficient generally ranges between zero and 0.13. Users may want to consult with local meteorologists for more appropriate values.

Note: If the reach variable climatology option (steady-state simulations only) is used, the elevation data and dust attentuation coefficient for each reach are supplied in Data Type 5A and the value supplied in Data Type 1A are overridden.

Data Type 1 must end with an ENDATA1 card.

C. Data Type 1A - Global Algal, Nitrogen, Phosphorus, and Light Parameters

These parameters and constants apply to the entire simulation and represent the kinetics of the algal, nutrient, and light interactions. It is important to note that proper use of all options in QUAL2E requires detailed knowledge of the algal growth kinetics appropriate for the water body being simulated.

These data cards are required only if algae, the nitrogen series (organic, ammonia, nitrite, and nitrate), or the phosphorus series (organic and dissolved) are to be simulated. Otherwise they may be omitted, except for the ENDATA1A card. Information is supplied in two data fields per card, columns 33-39 and 74-80. As with Type 1 Data, QUAL2E recognizes Type 1A Data by comparing the first characters (columns 1-4) of each card with a set of internally fixed codes. If a match between the codes and the characters occurs, then data are accepted as supplied on the card by the user. If a match does not occur, then the system variables for the unmatched codes will be assigned the value zero (0.0). Note: the spaces (under bars) are an integral (necessary) part of the four character code.

O_UP - Card 1 specifies the oxygen uptake per unit of ammonia oxidation, and oxygen uptake per unit of nitrite oxidation.

O_PR - Card 2 contains data on oxygen production per unit of algae growth, usually 1.6 mg O/mg A, with a range of 1.4 to 1.8. It also contains data on oxygen uptake per unit of algae respiration, usually 2.0mg O/mg A respired, with a range of 1.6 to 2.3.

N_CO - Card 3 concerns the nitrogen content and phosphorus content of algae in mg N or P per mg of algae. The fraction of algae biomass that is nitrogen is about 0.08 to 0.09, and the fraction of algae biomass that is phosphorus is about 0.012 to 0.015.

ALG_ - Card 4 specifies the growth and respiration rates of algae. The maximum specific growth rate has a range of 1.0 to 3.0 per day. The respiration value of 0.05 is for clean streams, while 0.2 is used where the N_E and P_2 concentrations are greater than twice the half saturation constants.

N_HA - Card 5 contains the nitrogen and phosphorus half saturation coefficients. The range of values for nitrogen is from 0.01 to 0.3 mg/L and for phosphorus the values typically range from 0.001 to 0.05 mg/L.

LIN_ - Card 6 contains the linear and nonlinear algal selfshading light extinction coefficients. The coefficients λ_1 and λ_2 are defined below.

λ_1 = linear algae self-shading coefficient
(1/ft)/(ug chla/L), or (1/m)/(ug chla/L)

λ_2 = nonlinear algae self-shading coefficient
(1/ft)/ug chla/L)$^{2/3}$, or (1/m)/(ug chla/L)$^{2/3}$

These two self-shading coefficients are used with λ_o, the non-algal light extinction coefficient (Type 6B Data) in the general light extinction equation shown below:

$$\lambda = \lambda_0 + \lambda_1 \alpha_o A + \lambda_2 (\alpha_o A)^{2/3}$$

where λ is the total light extinction coefficient and A is the algae biomass concentration in mg A/L and α_o is the chlorophyll a to algae biomass ratio as ug chla/mg A. Appropriate selection of the values of λ_0, λ_1, and λ_2 allows a variety of light extinction relationships to be simulated as follows.

* No self-shading (Roesner et al, SEMCOG)

  $\lambda_1 = \lambda_2 = 0$

* Linear algal self-shading (JRB Assoc. Vermont)

  $\lambda_1 \neq 0 \quad \lambda_2 = 0$

* Nonlinear self-shading (Riley Eq., metric units)

  $\lambda_1 = 0.0088$

  $\lambda_2 = 0.054$

LIGH - Card 7 contains the solar light function option for computing the effects of light attenuation on the algal growth rate, and the light saturation coefficient. QUAL2E recognizes three different solar light function options. The light saturation coefficient is coupled to the selection of a light function, thus care must be exercised in specifying a consistent pair of values.

The depth integrated form of the three light functions and the corresponding definitions of the light saturation coefficient are given in Section 3.2.3.1, Eq. III-6a,b,c and outlined in the following table.

Light Function Option (Columns 33-39)	Light Saturation Coefficient* (Columns 74-80)
1 (Half Saturation)	Half Saturation Coefficient
2 (Smith's Function)	Light intensity corresponding to 71% of maximum growth rate
3 (Steele's Function)	Saturation Light Intensity

* Units of the Light Saturation Coefficient are as follows:
  English: BTU/ft^2-min and Metric: Langleys/min

Light Function Option 1 uses a Michaelis-Menton half saturation formulation for modeling the algal growth limiting effects of light (FL). It is the method used in the SEMCOG version of QUAL-2. Option 2 is similar to Michaelis-Menton, but uses a second order rather than first order light effect. Both options 1 and 2 are monotonically increasing functions of light intensity. Option 3 includes a photo-inhibition effect at high light intensities and has been reported in Bowie et al. (1985).

DAIL - Card 8, contains the light averaging option (columns 33-39) and the light averaging factor (columns 74-80). These values are used only in a steady-state simulation. The light averaging option allows the user to specify the manner in which the light attenuation factor is computed, from the available values of solar radiation. (See Section 3.2.3.2). A summary of these options is given below.

Option	Description
1	FL is computed from one daily average solar radiation value calculated in the steady-state temperature subroutine (HEATER).
2	FL is computed from one daily average solar radiation read from Data Type 1A.
3	FL is obtained by averaging the 24 hourly values of FL, that are computed from the 24 hourly values of solar radiation calculated in the steady-state temperature subroutine (HEATER).
4	FL is obtained by averaging the 24 hourly values of FL, that are computed from the 24 hourly values of solar radiation computed from the total daily solar radiation (Data Type 1A) and an assumed cosine function.

Note: that if options 1 or 3 are selected, temperature must be simulated.

The light averaging factor (columns 74-80) is used to make a single calculation using daylight average solar radiation (Option 1 or 2) agree with average of calculations using hourly solar radiation values (Option 3 or 4). The factor has been reported to vary from 0.85 to 1.00.

The selection of a daily (diurnal) light averaging option depends largely on the detail to which the user wishes to account for the diurnal variation in light intensity. Options 1 and 2 utilize a single calculation of FL based on an average daylight solar radiation value. Options 3 and 4 calculate hourly values of FL from hourly values of solar radiation and then average the hourly FL values to

obtain the average daylight value. Options 1 and 3 use the solar radiation from the temperature heat balance routines (thus both algae and temperature simulations draw on the same source for solar radiation). Options 2 and 4 use the solar radiation value in Data Type 1A for the algae simulation. Thus either option 2 or 4 must be selected when algae are simulated and temperature is not. The light averaging factor is used to provide similarity in FL calculations between options 1 and 2 versus options 3 and 4. The solar radiation factor (Data Type 1A, card 11) specifies the fraction of the solar radiation computed in the heat balance that is photosynthetically active. It is used only with options 1 or 3.

In dynamic algae simulations, option 3 is used (default) unless temperature is not simulated, in which case solar radiation data are read in with the local climatology data.

NUMB - Card 9 contains the number of daylight hours (columns 33-39), and the total daily radiation (BTU/ft^2, or Langleys) (columns 74-80). This information is used if light averaging options 2 or 4 are specified for the simulation.

ALGY - Card 10 contains the light-nutrient option for computing the algae growth rate (columns 33-39), and the algal preference factor for ammonia nitrogen (columns 74-80). The light-nutrient interactions for computing algae growth rate are as follows (see also Section 3.2.2).

Option	Description
1	Multiplicative: (FL) * (FN) * (FP)
2	Limiting Nutrient: FL * [minimum (FN, FP)]
3	Harmonic Mean $\frac{FL * 2}{1/FN + 1/FP}$

Option 1 is the form used in QUAL-II SEMCOG, while option 2 is used in the revised META Systems Version of QUAL-II (JRB Associates, 1983). Option 3 is described by Scavia and Park (1976).

The algal preference factor for ammonia (columns 74-80) defines the relative preference of algae for ammonia and nitrate nitrogen (see also Section 3.3.2). The user defines this preference by specifying a decimal value between 0 and 1.0, for example:

Algal Preference Factor for Ammonia	Interpretation
0.0	Algae will use only nitrate for growth.
0.5	Algae will have equal preference for ammonia and nitrate.
1.0	Algae will use only ammonia for growth.

ALG/ - Card 11 contains the factor for converting the solar radiation value from the heat balance to the solar radiation value appropriate for the algae simulation (columns 33-39) and the value of the first order nitrification inhibition coefficient (columns 74-80).

The solar radiation factor specifies the fraction of the solar radiation computed in the heat balance (subroutine HEATER) that is photosynthetically active (i.e., used by algal cells for growth). It is required only in steady-state simulations when light averaging options 1 or 3 (Data Type 1A, card 8) are selected. A decimal value between 0 and 1.0 specifies the value of this fraction. Typically the value of this fraction is about 0.45 (Bannister, 1974).

The first order nitrification inhibition coefficient is the value of KNITRF in the following equation (see Section 3.3.5).

CORDO = 1.0 - exp (-KNITRF * DO)

where:

DO = dissolved oxygen concentration (mg/L), and
CORDO = correction factor applied to ammonia and nitrite oxidation rate coefficients.

The following table contains values of CORDO as a function of DO (row) and KNITRF (column).

DO	KNITRF					
(mg/L)	0.5	0.7	1.0	2.0	5.0	10.0
0.1	.05	.07	.10	.18	.39	.63
0.2	.10	.13	.18	.33	.63	.86
0.3	.14	.19	.26	.45	.78	.95
0.4	.18	.24	.33	.55	.86	.98
0.5	.22	.30	.39	.63	.92	.99
0.7	.30	.39	.50	.75	.97	1.00
1.0	.39	.50	.63	.86	.99	1.00
1.5	.53	.65	.78	.95	1.00	1.00
2.0	.63	.75	.86	.98	1.00	1.00
3.0	.78	.88	.95	1.00	1.00	1.00
4.0	.86	.94	.98	1.00	1.00	1.00
5.0	.92	.97	.99	1.00	1.00	1.00
7.0	.97	.99	1.00	1.00	1.00	1.00
10.0	.99	1.00	1.00	1.00	1.00	1.00

A value of 0.6 for KNITRF closely matches the inhibition formula tion in QUAL-TX (TWDB, 1984) while a value of 0.7 closely matches the data for the Thames Estuary (DSIR, 1964). The default value of KNITRF is 10.0, i.e., no inhibition of nitrification at low dissolved oxygen.

ENDA - The last card in Data Type 1A must be an ENDATA1A card, regardless of whether algae, nitrogen, or phosphorus are simulated.

D. Data Type 1B - Temperature Correction Factors

Several of the processes represented in QUAL2E are affected by temperature. The user may elect to input specific temperature correction factors. In the absence of such information, default values are used as noted in Table A-1. The user need supply only those values that are to be changed.

Data Type 1B information is supplied as follows:

Alphanumeric code for each temperature coefficient as noted in Table A-1:	Columns 10-17
User specified temperature coefficient	Columns 19-26

The last card in Data Type 1B must be an ENDATA1B card, regardless of whether any of the default values are modified.

TABLE A-1 DEFAULT THETA VALUES FOR QUAL2E

INDEX	RATE COEFFICIENT	DEFAULT VALUES SEMCOG	DEFAULT VALUES QUAL-2E	CODE
1	BOD Decay	1.047	1.047	BOD DECA
2	BOD Settling	-	1.024	BOD SETT
3	Reaeration	1.0159	1.024	OXY TRAN
4	SOD Uptake	-	1.060	SOD RATE
5	Organic N Decay	-	1.047	ORGN DEC
6	Organic N Settling	-	1.024	ORGN SET
7	Ammonia Decay	1.047	1.083	NH3 DECA
8	Ammonia Source	-	1.074	NH3 SRCE
9	Nitrite Decay	1.047	1.047	NO2 DECA
10	Organic P Decay	-	1.047	PORG DEC
11	Organic P Settling	-	1.024	PORG SET
12	Dissolved P Source	-	1.074	DISP SRC
13	Algae Growth	1.047	1.047	ALG GROW
14	Algae Respiration	1.047	1.047	ALG RESP
15	Algae Settling	-	1.024	ALG SETT
16	Coliform Decay	1.047	1.047	COLI DEC
17	Non-cons Decay	1.047	1.000	ANC DECA
18	Non-cons Settling	-	1.024	ANC SETT
19	Non-cons Source	-	1.000	ANC SRCE

E. Data Type 2 - Reach Identification and River Mile/Kilometer Data

The cards of this group identify the stream reach system by name and river mile/kilometer by listing the stream reaches from the most upstream point in the system to the most downstream point. When a junction is reached, the order is continued from the upstream point of the tributary. There is one card per reach. The following information is on each card:

Reach Order or Number	Columns 16-20
Reach Identification or Name	Columns 26-40
River Mile/Kilometer at Head of Reach	Columns 51-60
River Mile/Kilometer at End of Reach	Columns 71-80

A very useful feature of QUAL2E pertaining to modifications of reach identification once the system has been coded is that existing reaches may be subdivided (or new reaches added) without renumbering the reaches for the whole system. If, for example, it is desired to divide the river reach originally designated as REACH 3 into two reaches, the division is made by calling the upstream portion REACH 3 and the "new reach" downstream REACH 3.1. Up to nine such divisions can be made per reach (3.1-3.9); thus REACH 3 (or any other reach) can be divided into as many as 10 reaches numbered 3, 3.1-3.9. This option of dividing a reach is useful particularly when new field data indicate a previously unknown change in geomorphology, or when the addition of a new or proposed load alters the biochemistry in the downstream portion of the reach. If this option is invoked, the number of reaches specified in Data Type 1 must be changed to the new total number of reaches.

Note: It is important to realize that this option cannot be used to subdivide a reach into more (and thus smaller) computational elements, in an attempt to provide greater detail to the simulation. All computational elements must have the same length (as specified in Type 1 Data).

This option also will allow the user to add a new reach to the system; for example, taking a tributary that was initially modeled as a point source and changing it to a modeled reach (or reaches) in the basin. This type of modification adds a junction to the system and thus the junction information in Data Types 1, 4, and 9 must be modified accordingly.

This group of cards must end with ENDATA2.

F. Data Type 3 - Flow Augmentation Data

These cards, except ENDATA3, are required only if flow augmentation is to be used. The cards in this group contain data associated with determining flow augmentation requirements and available sources of flow augmentation. There must be as many cards in this group as in the reach identification group. The following information is on each card.

Reach Order or Number	Columns 26-30
Augmentation Sources (the number of headwater sources which are available for flow augmentation)	Columns 36-40
Target Level (minimum allowable dissolved oxygen concentration (mg/L) in this reach)	Columns 41-50
Order of Sources (order of available headwaters, starting at most upstream points	Columns 51-80

This card group must end with ENDATA3, even if no flow augmentation is desired.

G. Data Type 4 - Computational Elements Flag Field Data

This group of cards identifies each type of computational element in each reach. These data allow the proper form of the routing equations to be used by the program. There are seven element types allowed, they are listed below.

IFLAG	Type
1	Headwater source element.
2	Standard element, incremental inflow/ outflow only.
3	Element on mainstream immediately upstream of a junction.
4	Junction element.
5	Most downstream element.
6	Input (point source) element.
7	Withdrawal element.

Each card in this group (one for each reach), contains the following information:

Reach Order or Number	Columns 16-20
Number of Elements in the Reach	Columns 26-30
Element Type (these are the numbers, (IFLAG above), which identify each element by type).	Columns 41-80

Remember that once a system has been coded, reaches can be divided or new ones added without necessitating the renumbering of the entire system (see Data Type 2 - Reach Identification and River Mile/Kilometer Data for application and constraints). When this option is invoked, the element types and number of elements per reach for the affected reaches must be adjusted in Data Type 4 to reflect the changes.

This card group must end with ENDATA4.

H. Data Type 5 - Hydraulics Data

Two options are available to describe the hydraulic characteristics of the system. The first option utilizes a functional representation, whereas the second option utilizes a geometric representation. The option desired is specified in Data Type 1, card 5. The code "TRAPEZOIDAL" specifically denotes the geometric representation. Any other code, such as "NO TRAPEZOIDAL," or "DISCHARGE COEFFICIENTS," specifies the functional representation.

Note: With either option, the effect is global (for the entire system). This option is not reach variable.

If the first option is selected, velocity is calculated as $V = aQ^b$ and depth is found by $D = cQ^d$. Each card represents one reach and contains the values of a, b, c, and d, as described below.

Reach Order or Number	Columns 16-20
Dispersion Constant	Columns 23-30
a, coefficient for velocity	Columns 31-40
b, exponent for velocity	Columns 41-50
c, coefficient for depth	Columns 51-60
d, exponent for depth	Columns 61-70
Mannings "n" for reach (if not specified, the program default value is 0.02)	Columns 71-80

The dispersion constant is the value of K in the general expression relating the longitudinal dispersion coefficient to the depth of flow and shear velocity (See Section 2.4.3).

$$D_L = Kdu^*$$

where:

D_L = longitudinal dispersion coefficient, (ft^2/sec, m^2/day)

K = dispersion constant, dimensionless

d = mean depth of flow, (ft,m)

u^* = shear velocity, (ft/sec, m/sec) = $(gdS)^{1/2}$

g = gravitational constant (ft/sec^2, m/sec^2)

S = slope of the energy grade line (ft/ft, m/m)

Substitution of the Manning equation for S leads to the following expression for the longitudinal dispersion coefficient, D_L.

$$D_L = 3.82 \text{ Knud}^{5/6}$$

where:

n = Mannings roughness coefficient, and

V = Mean stream velocity (ft/sec, m/sec).

Typical values of K range from 6 to 6000. A value of 5.93 leads to the Elder equation for longitudinal dispersion, which is the one used in the SEMCOG version of QUAL-II.

The coefficients a, b, c, and d should be expressed to relate velocity depth and discharge units as follows.

System	Q	V	D
Metric	m^3/sec	m/sec	m
English	ft^3/sec	ft/sec	ft

If the second option is selected, each reach is represented as a trapezoidal channel. These data are also used to specify the trapezoidal cross-section (bottom width and side slope), the channel slope, and the Manning's "n" corresponding to the reach. The program computes the velocity and depth from these data using Manning's Equation and the Newton-Raphson (iteration) method.

One card must be prepared for each reach:

Reach Order or Number	Columns 16-20
Dispersion Constant, K	Columns 23-30
Side Slope 1 (run/rise; ft/ft, m/m)	Columns 31-40
Side Slope 2 (run/rise; ft/ft, m/m)	Columns 41-50
Bottom Width of Channel, (feet, meters)	Columns 51-60
Channel Slope (ft/ft, m/m)	Columns 61-70
Mannings "n" (Default - 0.020)	Columns 71-80

This group of data cards must end with an ENDATA5 card.

HA. Data Type 5A - Temperature and Local Climatology Data

This group of data supplies the reach variable air temperature and climatological information for steady-state water temperature simulation. If QUAL2E is to be used in the dynamic/diurnal mode, the air temperature and climatological inputs must be global constants and are supplied in a separate data file according to the format described in Section X.- Climatological Data. The data in this group consist of geographical and meteorological data required for performing the energy balance for heat transfer across the air-water interface.

There are three options in QUAL2E for providing the input variables for steady state temperature simulation.

Option 1: Reach Variable Temperature Inputs. In this option the user specifies explicitly the values of the temperature simulation inputs for all reaches in the system. One card (line of data) is necessary for each reach and contains the following information.

Reach Order or Number	Columns 16-20
Reach Elevation (ft,m)	Columns 25-31
Dust Attenuation Coefficient	Columns 32-38
Cloudiness, fraction in tenths of cloud cover	Columns 39-45
Dry Bulb Air Temperature (F, C)	Columns 46-52
Wet Bulb Temperature (F, C)	Columns 53-59
Barometric (atmospheric) Pressure (inches Hg, millibars)	Columns 60-66
Wind Speed (ft/sec, m/sec)	Columns 67-73

Option 2a: Global Values - Current Version of QUAL2E. With this option the user may specify a single value for each of the temperature simulation inputs and QUAL2E will assume that these values apply to all reaches in the system being modeled. The required input data for this option is the same as that for option 1, with the exception that only one line of data is necessary.

Option 2b: Global Values - Prior QUAL2E Versions. The current version of QUAL2E will accept without modification input data files for steady-state temperature simulations from prior versions of QUAL2E. Because prior versions treated the temperature simulation inputs as global constants, so also will the current version. In this option the required temperature simulation inputs are supplied according to the specifications in Section X - Climatological Data.

Option 3: Reach Variable Temperature Inputs with Estimation of Pressure Variation with Elevation. In the case where reach variable temperature simulation inputs are desired, but atmospheric pressure values are either unknown or unavailable, QUAL2E has the capability of estimating the value of atmospheric pressure for each reach from its elevation and temperature. These estimates are computed from the ideal gas law integrated, at constant temperature and specific humidity, over the change in elevation relative to a datum (see Section 4.8). The input requirements for this option are the same as for option 1, with the exception that the value of atmospheric pressure is supplied for only one reach. This value serves as the datum or reference from which atmospheric pressures for the other reaches are estimated. If this option is used, the computed values of reach atmospheric pressure will appear in the QUAL2E echo-print of the input data.

Notes:

1. It is important to realize that the user does not explicitly specify whether options 1,2, or 3 for steady-state reach variable temperature simulation are to be used. Rather, QUAL2E examines the format in which the temperature/climatology input information are provided in the input data file, matches it with one of the options described above, and then proceeds with the appropriate computational strategy.

2. This data group (Data Type 5A) must end with ENDATA5A. If option 2b is to be used (input data files from prior versions of QUAL2E), this data type is eliminated entirely. Data Type 5A is also not allowed for dynamic/diurnal QUAL2E simulations.

3. Values for elevation and dust attenuation coefficient appear in two places, here in Data Type 5A and also in Data Type 1. The values in Data Type 5A are used with options 1, 2a, and 3 and always override those in Data Type 1. The values in Data Type 1 are used only in option 2b - input data files from prior versions of QUAL2E.

I. Type 6 - BOD and DO Reaction Rate Constants Data

This group of cards includes reach information on the BOD decay rate coefficient and settling rate, sediment oxygen demand, as well as the method of computing the reaeration coefficient. Eight options for reaeration coefficient calculation are available (see Section 3.6.2) and are listed below.

K2 OPT	Method
1	Read in values of K2.
2	Churchill.
3	O'Connor and Dobbins.
4	Owens, Edwards, and Gibbs.
5	Thackston and Krenkel.
6	Langbien and Durum.
7	Use equation $K2 = aQ^b$
8	Tsivoglou-Wallace.

One card is necessary for each reach, and contains the following information:

Reach Order or Number	Columns 16-20
BOD Decay Rate Coefficient (1/day)	Columns 21-28
BOD Removal Rate by Settling (1/day)	Columns 29-36
Sediment Oxygen Demand (g/ft^2-day, g/m^2-day)	Columns 37-44
Option for K2 (1-8, as above)	Columns 45-48
K2 (Option 1 only) Reaeration Coefficient, per day, base e, 20C	Columns 49-56
a, Coefficient for K2 (Option 7) or Coefficient for Tsivoglou (Option 8)	Columns 57-64
b, Exponent for K2 (Option 7) or Slope of the Energy Gradient, S_e, (Option 8)	Columns 65-72

The units of a and b vary depending on whether option 7 or 8 is used and on whether the input data are in English or Metric units, as follows:

Units of a:	English	Metric
Option 7 (Coefficient)	Consistent with flow in cfs	Consistent with flow in cms
Option 8 (Coefficient)	1/ft	1/m
Units of b:	**English**	**Metric**
Option 7 (Exponent)	Consistent with flow in cfs	Consistent with flow in cms
Option 8 (S_e)	Dimensionless	Dimensionless

For option 8 (Tsivoglou's option), the energy gradient, S_e need not be specified if a Manning "n" value was assigned under Hydraulic Data Type 5. S_e will be calculated from Manning's Equation using the wide channel approximation for hydraulic radius.

This group of cards must end with ENDATA6.

J. Data Type 6A - N and P Coefficients

This group of cards is required if algae, the nitrogen series (organic nitrogen, ammonia, nitrite, and nitrate), or the phosphorus series (organic and dissolved) are to be simulated. Otherwise, they may be omitted. Each card of this group, one for each reach, contains the following information:

Reach Order or Number	Columns 20-24
Rate Coefficient for Organic-N Hydrolysis (1/day)	Columns 25-31
Rate Coefficient for Organic-N Settling (1/day)	Columns 32-38
Rate Coefficient for Ammonia Oxidation (1/day)	Columns 39-45
Benthos Source Rate for Ammonia (mg/ft^2-day, mg/m^2-day)	Columns 46-52
Rate Coefficient for Nitrite Oxidation (1/day)	Columns 53-59
Rate Coefficient for Organic Phosphorus Decay (1/day)	Columns 60-66
Rate Coefficient for Organic Phosphorus Settling (1/day)	Columns 67-73
Benthos Source Rate for Dissolved Phosphorus (as P, mg/ft^2-day, mg/m^2-day)	Columns 74-80

Note that the benthos source rates are expressed per unit of bottom area. Other versions of QUAL-II use values per length of stream. To convert to the areal rate, divide the length value by the appropriate stream width.

This group of cards must end with ENDATA6A, even if algae, nitrogen, or phosphorus are not simulated.

K. Data Type 6B - Algae/Other Coefficients

This group of cards is required if algae, the nitrogen series, the phosphorus series, coliform, or the arbitrary non-conservative is to be simulated. Otherwise, they may be omitted. Each card of the group, one per reach, contains the following information:

Reach Order or Number	Columns 20-24
Chlorophyll a to Algae Ratio* (ug chla/mg algae)	Columns 25-31
Algal Settling Rate (ft/day, m/day)	Columns 32-38
Non-Algal Light Extinction** Coefficient (1/ft, 1/m)	Columns 39-45
Coliform Decay Coefficient (1/day)	Columns 46-52
Arbitrary Non-Conservative Decay Coefficient (1/day)	Columns 53-59
Arbitrary Non-Conservative Settling Coefficient (1/day)	Columns 60-66
Benthos Source Rate for Arbitrary Non-Conservative (mg/ft^2-day, mg/m^2-day)	Columns 67-73

* If not specified, the QUAL2E default value is 50 ug Chl-a/mg algae.

** If not specified, the QUAL2E default value is 0.01 ft^{-1} which corresponds approximately to the extinction coefficient for distilled water.

This group of cards must end with ENDATA6B, even if algae, nitrogen, phosphorus, coliform, or the arbitrary, non-conservative are not simulated.

L. Data Type 7 - Initial Conditions - 1

This card group, one card per reach, establishes the initial conditions of the system, with respect to temperature, dissolved oxygen concentration, BOD concentration, and conservative minerals. Initial conditions for temperature must always be specified whether it is simulated or not. The reasons for this requirement are: (a) when temperature is not simulated, the initial condition values are used to set the value of the temperature dependent rate constants; (b) for dynamic simulations the initial condition for temperature, and every other quality constituent to be simulated, defines the state of the system at time zero; and (c) for steady state simulations of temperature, an initial estimate of the temperature between 35 F and 135 F is required to properly initiate the heat balance computations. Specifying 68F or 20C for all reaches is a sufficient initial condition for the steady-state temperature simulation case. The information contained is as follows.

Reach Order or Number	Columns 20-24
Temperature (F or C)**	Columns 25-31
Dissolved Oxygen (mg/L)	Columns 32-38
BOD (mg/L)	Columns 39-45
Conservative Mineral I*	Columns 46-52
Conservative Mineral II*	Columns 53-59
Conservative Mineral III*	Columns 60-66
Arbitrary Non-Conservative*	Columns 67-73
Coliform (No./100 ml)	Columns 74-80

* - Units are those specified on the Title Card.

** - If not specified, the QUAL2E default value is 68 F, 20 C.

This group of cards must end with ENDATA7.

M. Data Type 7A - Initial Conditions - 2

This group of cards is required if algae, the nitrogen series, or the phosphorus series are to be simulated. The information is coded as follows:

Reach Order or Number	Columns 20-24
Chlorophyll a (ug/L)	Columns 25-31
Organic Nitrogen as N (mg/L)	Columns 32-38
Ammonia as N (mg/L)	Columns 39-45
Nitrite as N (mg/L)	Columns 46-52
Nitrate as N (mg/L)	Columns 53-59
Organic Phosphorus as P (mg/L)	Columns 60-66
Dissolved Phosphorus as P (mg/L)	Columns 67-73

This group of cards must end with ENDATA7A, even if algae, nitrogen, or phosphorus are not simulated.

N. Data Type 8 - Incremental Inflow - 1

This group of cards, one per reach, accounts for the additional flows into the system not represented by point source inflows or headwaters. These inflows, which are assumed to be uniformly distributed over the reach, are basically groundwater inflows and/or distributed surface runoff that can be assumed to be approximately constant through time.

An important new feature to QUAL2E is that incremental outflow along a reach may be modeled. This option is useful when field data show a decreasing flow rate in the downstream direction indicating a surface flow contribution to groundwater.

Each card, one for each reach, contains the following information:

Reach Order or Number	Columns 20-24
Incremental Inflow (cfs, m^3/sec) outflows are indicated with a minus "-" sign.	Columns 25-31
Temperature (F, C)	Columns 32-38
Dissolved Oxygen (mg/L)	Columns 39-44
BOD (mg/L)	Columns 45-50
Conservative Mineral I	Columns 51-56
Conservative Mineral II	Columns 57-62
Conservative Mineral III	Columns 63-68
Arbitrary Non-Conservative	Columns 69-74
Coliform (No./100 ml)	Columns 75-80

This group of cards must end with ENDATA8.

O. Data Type 8A - Incremental Inflow - 2

This group of cards is a continuation of Data Type 8 and is required only if algae, the nitrogen series or the phosphorus series are to be simulated. Each card, one per reach, contains the following information.

Reach Order or Number	Columns 20-24
Chlorophyll a Concentration (ug/L)	Columns 25-31
Organic Nitrogen as N (mg/L)	Columns 32-38
Ammonia as N (mg/L)	Columns 39-45
Nitrite as N (mg/L)	Columns 46-52
Nitrate as N (mg/L)	Columns 53-59
Organic Phosphorus as P (mg/L)	Columns 60-66
Dissolved Phosphorus as P (mg/L)	Columns 67-73

This group of cards must end with ENDATA8A, even if algae, nitrogen, or phosphorus are not simulated.

P. Data Type 9 - Stream Junction Data

This group of cards is required if there are junctions or confluences in the stream being simulated. Otherwise, they may be omitted. The junctions are ordered starting with the most upstream junction. For systems containing a junction(s) on a tributary, the junctions must be ordered in the manner indicated in Figure A-1; that is, the junctions must be ordered so that the element numbers just downstream of the junction are specified in ascending order. In Figure A-1, the downstream element numbers for Junction 1, 2 and 3 are 29, 56, and 64, respectively. There is one card per junction, and the following information is on each card:

Junction Order or Number	Columns 21-25
Junction Names or Identification	Columns 35-50
Order Number of the Last Element in the reach immediately upstream of the junction (see Figure A-1). In the example, for Junction 1, the order number of the last element immediately upstream of the junction is number 17. For Junction 2, it is number 49. For Junction 3, it is number 43.	Columns 56-60
Order Number of the First Element in the reach immediately downstream from the junction. It is these numbers that must be arranged in ascending order. Thus, for Figure A-1 these order numbers for Junctions 1, 2, and 3 are 29,56, and 64 respectively.	Columns 66-70
Order Number of the Last Element in the last reach of the tributary entering the junction. For Figure A-1 these order numbers for Junctions 1, 2, and 3 are 28, 55, and 63, respectively.	Columns 76-80

This group of cards must end with ENDATA9, even if there are no junctions in the system.

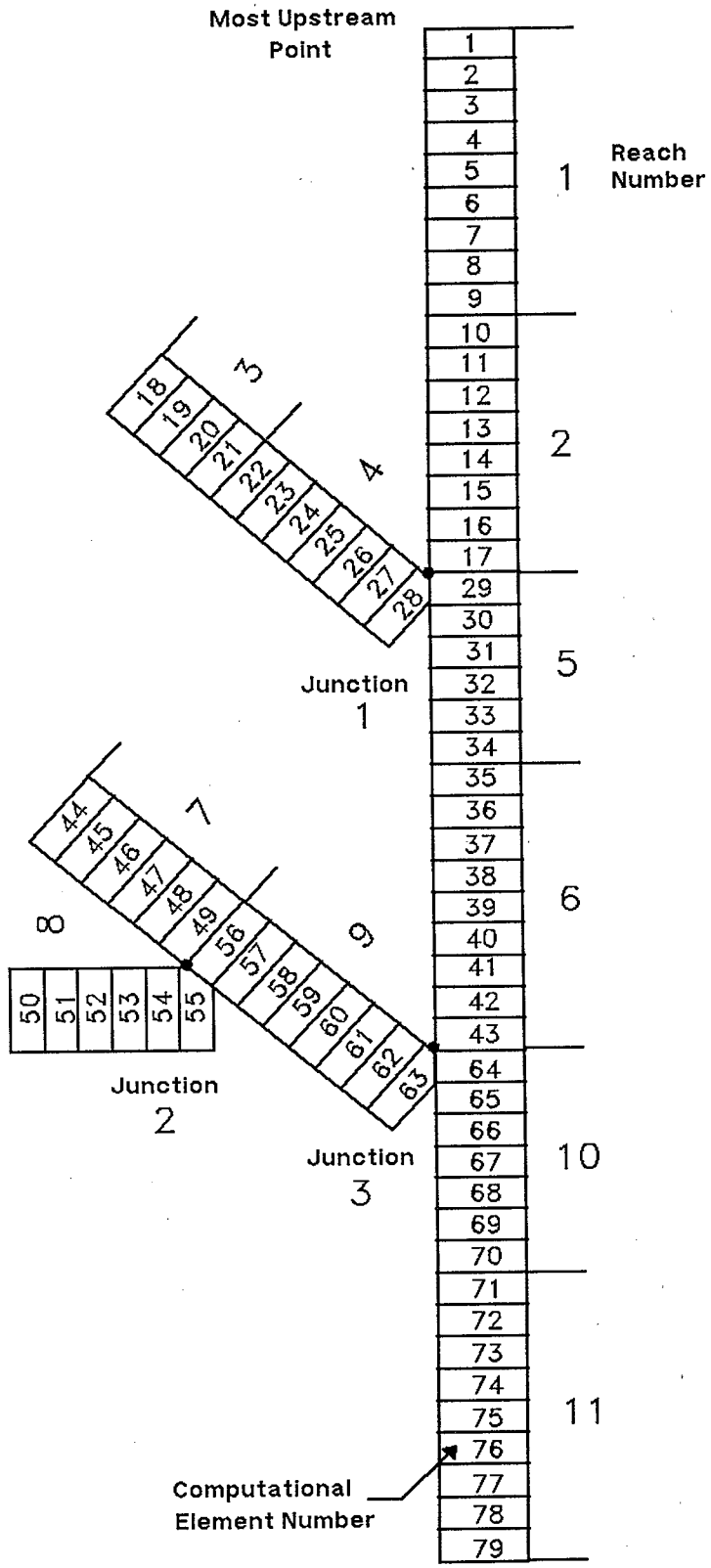

FIGURE A-1 STREAM NETWORK EXAMPLE TO ILLUSTRATE DATA INPUT

Q. Data Type 10 - Headwater Sources Data - 1

This group of cards, one per headwater, defines the flow, temperature, dissolved oxygen, BOD, and conservative mineral, concentrations of the headwater. The following information is on each card.

Headwater Order or Number Starting at Most Upstream Point	Columns 15-19
Headwater Name or Identification	Columns 20-35
Flow (cfs, m^3/sec)	Columns 36-44
Temperature (F, C)	Columns 45-50
Dissolved Oxygen Concentration (mg/L)	Columns 51-56
BOD Concentration (mg/L)	Columns 57-62
Conservative Mineral I	Columns 63-68
Conservative Mineral II	Columns 69-74
Conservative Mineral III	Columns 75-80

This group of cards must end with ENDATA10.

R. Data Type 10A - Headwater Sources Data - 2

This group of cards supplements the information in Data Type 10 and is required if algae, the nitrogen series, the phosphorus series, coliform, or arbitrary non-conservative are to be simulated. Each card, one per headwater, contains the following data.

Headwater Order or Number	Columns 16-20
Arbitrary Non-Conservative	Columns 21-26
Coliform, (No./100 ml)	Columns 27-32
Chlorophyll a (ug/L)	Columns 33-38
Organic Nitrogen as N (mg/L)	Columns 39-44
Ammonia as N (mg/L)	Columns 45-50
Nitrite as N (mg/L)	Columns 51-56
Nitrate as N (mg/L)	Columns 57-62
Organic Phosphorus as P (mg/L)	Columns 63-68
Dissolved Phosphorus as P (mg/L)	Columns 69-74

This group of cards must end with ENDATA10A, even if algae, nitrogen, phosphorus, coliform, or arbitrary non-conservative are not simulated.

S. Data Type 11 - Point Load - 1

This group of cards is used to define point source inputs and point withdrawals from the stream system. Point sources include both wasteloads and unsimulated tributary inflows. One card is required per inflow or withdrawal. Each card describes the percent of treatment (for wastewater treatment), inflow or withdrawal, temperature, and dissolved oxygen, BOD, and conservative mineral concentrations. They must be ordered starting at the most upstream point. The following information is on each card.

Point Load Order or Number	Columns 15-19
Point Load Identification or Name	Columns 20-31
Percent Treatment (applies only to influent BOD values)	Columns 32-36
Point Load Inflow or Withdrawal (cfs, m^3/sec) (a withdrawal must have a minus ("-") sign	Columns 37-44
Temperature (F, C)	Columns 45-50
Dissolved Oxygen Concentration (mg/L)	Columns 51-56
BOD Concentration (mg/L)	Columns 57-62
Conservative Mineral I	Columns 63-68
Conservative Mineral II	Columns 69-74
Conservative Mineral III	Columns 75-80

This group of cards must end with ENDATA11.

T. Data Type 11A - Point Load - 2

This group of cards supplements Data Type 11 and contains the algal, nutrient, coliform, and arbitrary non-conservative concentrations of the point source loads. This information is necessary only if algae, the nitrogen series, the phosphorus series, coliform, or the arbitrary non-conservative are to be simulated. Each card, one per waste load (withdrawal), contains the following information.

Point Load Order or Number	Columns 16-20
Arbitrary Non-Conservative	Columns 21-26
Coliform (No./100 ml)	Columns 27-32
Chlorophyll a (ug/L)	Columns 33-38
Organic Nitrate as N (mg/L)	Columns 39-44
Ammonia as N (mg/L)	Columns 45-50
Nitrite as N (mg/L)	Columns 51-56
Nitrate as N (mg/L)	Columns 57-62
Organic Phosphorus as P (mg/L)	Columns 63-68
Dissolved Phosphorus as P (mg/L)	Columns 69-74

This group of cards must end with ENDATA11A, even if algae, nitrogen, phosphorus, coliform, or arbitrary non-conservative are not simulated.

U. Data Type 12 - Dam Reaeration

This group of cards is required if oxygen input from reaeration over dams is to be modeled as a component of the dissolved oxygen simulation. Dam reaeration effects are estimated from the empirical equation attributed to Gameson as reported by Butts and Evans, 1983 (see Section 3.6.5). The following inputs are required.

Dam Order or Number	Columns 20-24
Reach Number of Dam	Columns 25-30
Element Number Below Dam	Columns 31-36
ADAM Coefficient:	Columns 37-42

ADAM = 1.80 for clean water
= 1.60 for slightly polluted water
= 1.00 for moderately polluted water
= 0.65 for grossly polluted water

BDAM Coefficient:	Columns 43-48

BDAM = 0.70 to 0.90 for flat broad crested weir.
= 1.05 for sharp crested weir with straight slope face.
= 0.80 for sharp crested weir with vertical face.
= 0.05 for sluice gates with submerged dishcarge.

Percent of Flow Over Dam (as a fraction 0.0-1.0)	Columns 49-54
Height of Dam (ft, m)	Columns 55-60

This group of cards must end with ENDATA12, even if oxygen input from dam reaeration is not to be modeled.

V. Data Type 13 - Downstream Boundary - 1

This data card supplies the constituent concentrations at the downstream boundary of the system. It is required only if specified in Data Type 1, card 8. This feature of QUAL2E is useful in modeling systems with large dispersion in the lower reaches (e.g., estuaries). When downstream boundary concentrations are supplied, the solution generated by QUAL2E will be constrained by this boundary condition. If the concentrations are not provided, the constituent concentrations in the most downstream element will be computed in the normal fashion using the zero gradient assumption (see Section 5.4.3.2).

Downstream boundary values for temperature, dissolved oxygen, BOD, conservative mineral, coliform, and arbitrary non-conservative are required as follows.

Temperature (F, C)	Columns 25-31
Dissolved Oxygen (mg/L)	Columns 32-38
BOD Concentration (mg/L)	Columns 39-45
Conservative Mineral I	Columns 46-52
Conservative Mineral II	Columns 53-59
Conservative Mineral III	Columns 60-66
Arbitrary Non-Conservative	Columns 67-73
Coliform (No./100 ml)	Columns 74-80

This data group must end with an ENDATA13 card, even if the fixed downstream boundary concentration option is not used in the simulation.

W. Data Type 13A - Downstream Boundary - 2

This group of data (one card) is a continuation of Data Type 13. It is required only if the fixed downstream boundary condition is used and if algae, the nitrogen series, and the phosphorus series are to be simulated. This card contains the downstream boundary concentrations for algae, nitrogen, and phosphorus as follows.

Chlorophyll a (ug/L)	Columns 25-31
Organic Nitrogen as N (mg/L)	Columns 32-38
Ammonia as N (mg/L)	Columns 39-45
Nitrite as N (mg/L)	Columns 46-52
Nitrate as N (mg/L)	Columns 53-59
Organic Phosphorus as P (mg/L)	Columns 60-66
Dissolved Phosphorus as P (mg/L)	Columns 67-73

This data group must end with an ENDATA13A card, even if the fixed downstream boundary condition is not used, and if algae, nitrogen, or phosphorus are not simulated.

X. Climatological Data

Climatological data are required for:

1. Temperature simulations, both steady-state and dynamic,
2. Dynamic simulations where algae is being simulated, and temperature is not.

If neither temperature nor dynamic algae are being simulated, these cards may be omitted.

For steady-state temperature simulations, these data may be supplied here (as in prior versions of QUAL2E) or in Data Type 5A, but not both. If the data are provided at this point in the input file, QUAL2E assumes that the climatological inputs are global constants. Only one card (line of data) is required, which gives the basin average values of climatological data, as follows.

Month	Columns 18-19
Day	Columns 21-22
Year (last two digits)	Columns 24-25
Hour of Day	Columns 26-30
Net Solar Radiation* (BTU/ft^2-hr, Langleys/hour)	Columns 31-40
Cloudiness**, fraction in tenths of cloud cover	Columns 41-48
Dry Bulb Temperature** (F, C)	Columns 49-56
Wet Bulb Temperature** (F, C)	Columns 57-64
Barometric pressure** (inches Hg, millibars)	Columns 65-72
Wind speed** (ft/sec, m/sec)	Columns 73-80

* Required only if dynamic algae is simulated and temperature is not.

** Required if temperature is simulated.

For dynamic/diurnal simulations, the climatological input data must be read from a separate input file (FORTRAN Unit Number 2). This input procedure is different from that used with prior versions of QUAL-II and QUAL2E and is designed to assist user interaction with QUAL2E by modularizing the variety of input data QUAL2E may require. The time variable climatology input data file is structured in the following manner. The first line consists of a descriptive title (80 alphanumeric characters) that identifies the data contained in the file. Subsequent lines provide the time variable basin average climatology data, chronologically ordered at 3-hour intervals. There must be a sufficient number of lines of data to cover the time period specified for the simulation (Data Type 1, card 13, MAXIMUM ROUTE TIME). The format for these data is the same as that described above for steady state temperature simulations.

There is no ENDATA line required for the climatological data.

Y. Plot Reach Data

This data type is required if the plotting option for DO/BOD is selected (Data Type 1, card 7, PLOT DO/BOD). The following information is required for QUAL2E to produce a line printer plot.

1. Card 1 - BEGIN RCH
   Reach number at which plot is to begin — Columns 11-15

2. Card 2 - PLOT RCH

   a. Reach numbers in their input order (1, 2, 3..NREACH) — Columns 11-15, Columns 16-20, 21-26, etc., 76-80

   b. If a reach is not to be plotted, (i.e., a tributary) replace the reach number with a zero.

   c. Use additional PLOT RCH cards if there are more than 14 reaches in the system.

3. Additional plots can be obtained by repeating the sequence of BEGIN RCH and PLOT RCH cards.

As an example of the plotting option, suppose that for the river system shown in Figure A-1, one wishes to obtain two DO/BOD plots: one for the main stream (Reaches 1, 2, 5, 6, 10, and 11) and one for the second tributary (Reaches 7 and 9). The plot data would appear in the following order.

```
BEGIN RCH 1
PLOT RCH 1  2  0  0  5  6  0  0  0  10  11
BEGIN RCH 7
PLOT RCH 0  0  0  0  0  0  7  0  9  0  0
```

No ENDATA card is required for the PLOT information.

YA. Plot Observed Dissolved Oxygen Data. The current version of QUAL2E has the capability to plot observed values of dissolved oxygen concentrations on the line printer plots produced for the computed values from the model. This feature is useful in assisting the user in model calibration. The observed DO data are read from a separate input data file (FORTRAN unit number 2) structured in a manner to be compatible with the Plot Reach Data (Section Y).

The first line, "DO TITLE:", consists of a descriptive title (70 alphanumeric characters) that identifies the data contained in the file. The second line, "NUM LOCS:", specifies the number of locations (n_1) for the first plot for which observed DO data are available. The next n_1 lines, "DO DATA", provide the observed DO data plotting information. One line is required for each location and contains the following data.

River location (mi, km)	Columns 11-20
Minimum DO (mg/L)	Columns 21-30
Average DO (mg/L)	Columns 31-40
Maximum DO (mg/L)	Columns 41-50

If only a single value of DO is available at a given location, it may be entered in either the minimum or average data position. Then by default, QUAL2E will set the minimum, maximum, and average values all equal to the value entered. When more than one line printer plot is specified in the Plot Reach Data, the observed DO values for these plots are provided on the lines following that for the first plot. The information is entered by repeating the sequence of "NUM LOCS:" and "DO DATA" lines for the data in the current plot.

Z. Summary

Constructing a consistent and correct input data set for a QUAL2E simulation must be done with care. This user's guide is designed to assist the user in this process. It has been NCASI's and EPA's experience that two of the most frequently made errors in constructing a QUAL2E input data set are:

(a) Usinga numerical value that is inconsistent with the input units option selected, and

(b) Notadheringto the 4-character input codes forData Types 1 and 1A.

As an aid to the units problem, Table A-2 is included in this report. It provides a complete summary of all the input variables whose dimensions are dependent on whether English or metric units are selected. Finally, the user is encouraged to check and recheck the input codes in Data Types 1 and 1A for accuracy, especially the codes for cards 10 and 11 of Data Type 1 (i.e., "NUMB" and "NUM_").

TABLE A-2. LIST OF QUAL2E INPUT VARIABLES THAT ARE ENGLISH/METRIC UNIT DEPENDENT

Data Type	Card or Line	Variable Description	FORTRAN Code Name	Units English	Units Metric
1	8	Input Units Specification	METRIC	0	1
	8	Output Units Specification	METOUT	0	1
1	11	Length of Computational Element	DELX	mile	kilometer
1	15	Evaporation Coefficient	AE	ft/hr-in Hg	m/hr-mbar
	15	Evaporation Coefficient	BE	ft/hr-in Hg-mph	m/hr-mbar-m/sec
1	16	Basin Elevation	ELEV	ft	meters
1A	6	Linear Algal Extinction Coeff	EXALG1	1/ft-ug-Chla/L	1/m-ug-Chla/L
	6	Non-linear Algal Extinction Coefficient	EXALG2	$1/ft\text{-}(ug\text{-}Chla/L)^{2/3}$	$1/m\text{-}(ug\text{-}Chla/L)^{2/3}$
1A	7	Light Saturation Coefficient	CKL	$BTu/ft^2\text{-}min$	langley/min
1A	9	Total Daily Solar Radiation	SONET	Btu/ft^2	langleys
2	all	River Mile/km to Head of Reach	RMTHOR	mile	kilometer
	all	River Mile/km to End of Reach	RMTEOR	mile	kilometer
5 (Discharge Coefficient)	all	Coefficient on Flow for Velocity	COEFQV	Consistent with flow, velocity and depth in cfs, fps, ft respectively	Consistent with flow, velocity, and depth in cms, mps, m respectively
		Exponent on Flow for Velocity	EXPOQV		
		Coefficient on Flow for Depth	COEFQH		
		Exponent on Flow for Depth	EXPOQH		
5 (Trapezoidal)	all	Bottom Width of Channel	WIDTH	ft	meters
5A	all	Reach Elevation	RCHELV	ft	meters
		Dry Bulb Temperature	RCHTDB	F	C
		Wet Bulb Temperature	RCHTWB	F	C
		Barometric Pressure	RCHATM	in Hg	mbar
		Wind Speed	RCHWND	ft/sec	m/sec
6	all	SOD Rate	CK4	$gm/ft^2\text{-}day$	$gm/m^2\text{-}day$
6	all	Option 7 for k_2			
		Coefficient on flow for k_2	COEQK2	Consistent with flow in cfs	Consistent with flow in cms
		Exponent on flow for k_2	EXPQK2		
6	all	Option 8 for K_2			
		Coefficient for Tsivoglou Eq.	COEQK2	1/ft	1/meter
		Slope of Energy Gradient	EXPQK2	ft/ft	meter/meter
6A	all	Benthal Source Rate for Ammonia-N	SNH3	$mg/ft^2\text{-}day$	$mg/m^2\text{-}day$
		Benthal Source Rate for Phosphorus	SPHOS	$mg/ft^2\text{-}day$	$mg/m^2\text{-}day$
6B	all	Algal Settling Rate	ALGSET	ft/day	m/day
		Non-algal Extinction Coefficient	EXCOEF	1/ft	1/meter
		Arbitrary Nonconservative Benthal Source Rate	SRCANC	$mg/ft^2\text{-}day$	$mg/m^2\text{-}day$
7	all	Initial Condition - Temperature	TINIT	F	C
8	all	Incremental Inflow			
		Flow Rate	QI	cfs	cms
		Temperature	TI	F	C
10	all	Headwater Conditions			
		Flow Rate	HWFLOW	cfs	cms
		Temperature	HWTEMP	F	C
11	all	Point Source/Withdrawal			
		Flow Rate	WSFLOW	cfs	cms
		Temperature	WFTEMP	F	C
12	all	Height of Dam	HDAM	ft	meters
13	1	Downstream Boundary-Temperature	LBTEMP	F	C
LCD	all	Solar Radiation	SOLHR	$BTu/ft^2\text{-}hr$	langleys/hr
		Dry Bulb Temperature	DRYBLB	F	C
		Wet Bulb Temperature	WETBLB	F	C
		Barometric Pressure	ATMPR	in Hg	mbar
		Wind Speed	WIND	ft/sec	m/sec

EPA/NCASI STREAM QUALITY ROUTING MODEL - QUAL2E INPUT DATA CODING FORMS

FORM 1 of 24

TITLE DATA

CARD TYPE	SIMULATE YES/NO	ALPHANUMERIC NAME	PARAMETER NAME	UNITS
TITLE01		TITLE OF RUN		
TITLE02		NAME OF BASIN		
TITLE03		CONSERVATIVE MINERAL I		
TITLE04		CONSERVATIVE MINERAL II		
TITLE05		CONSERVATIVE MINERAL III		
TITLE06		TEMPERATURE		
TITLE07		BIOCHEMICAL OXYGEN DEMAND		
TITLE08		ALGAE AS CHL-A IN UG/L		
TITLE09		PHOSPHORUS CYCLE AS P IN MG/L		
TITLE10		(ORGANIC-P; DISSOLVED-P)		
TITLE11		NITROGEN CYCLE AS N IN MG/L		
TITLE12		(ORGANIC-N; AMMONIA-N; NITRITE-N; NITRITE-N)		
TITLE13		DISSOLVED OXYGEN IN MG/L		
TITLE14		FECAL COLIFORMS IN NO./100	ML	
TITLE15		ARBITRARY NON-CONSERVATIVE		
ENDTITLE				

FORMAT (20 A4)

NOTE: The nitrogen cycle variables and the phosphorus cycle variables must each be simulated as a group.

EPA/NCASI STREAM QUALITY ROUTING MODEL - QUAL2E INPUT DATA CODING FORMS

FORM 2 of 24

DATA TYPE I PROGRAM CONTROL DATA

PROGRAM CONTROL PARAMETER	VALUE	PROGRAM CONTROL PARAMETER	VALUE
LIST DATA INPUT			
WRITE OPTIONAL SUMMARY			
NO FLOW AUGMENTATION			
STEADY STATE			
NO TRAPEZOIDAL X-SECTIONS			
PRINT SOLAR/LCD DATA			
PLOT DO AND BOD			
FIXED DNSTM CONC (YES=1)	=		
INPUT METRIC (YES=1)	=	5D-ULT BOD CONV K COEF	=
NUMBER OF REACHES	=	OUTPUT METRIC (YES=1)	=
NUM OF HEADWATERS	=	NUMBER OF JUNCTIONS	=
TIME STEP (HOURS)	=	NUMBER OF POINT LOADS	=
MAXIMUM ITERATIONS	=	LNTH COMP ELEMENT (DX)	=
* LATITUDE OF BASIN (DEG)	=	TIME INC. FOR RPT2 (HRS)	=
* STANDARD MERIDIAN (DEG)	=	LONGITUDE OF BASIN (DEG)	=
* EVAP. COEFF. (AE)	=	DAY OF YEAR START TIME	=
* ELEV. OF BASIN (ELEV)	=	EVAP. COEF. (BE)	=
ENDATAI		DUST ATTENUATION COEF.	=

FORMAT (6A4, A1, F10.0, 10X, 6A4, A1, F10.0)

* These lines may be omitted if temperature is not simulated.

PARAMETER	ENGLISH UNITS	METRIC UNITS
Length of Computational Element	miles	kilometers
Evaporation Coef. AE	(ft/hr)/(in-Hg)	(m/hr)/millibar
Evaporation Coef. BE	(ft/hr)/(in-Hg-mi/hr)	(m/hr)/(mbar-m/sec)
Elevation of Basin	feet	meters

EPA/NCASI STREAM QUALITY ROUTING MODEL - QUAL2E INPUT DATA CODING FORMS

FORM 3 of 24

DATA TYPE IA GLOBAL A, N, AND P PARAMETERS*

PARAMETER	VALUE	PARAMETER	VALUE
O UPTAKE BY NH3 OXID(MG O/MG N)	=	O UPTAKE BY NO2 OXID(MG O/MG N)	=
O PROD BY ALGAE (MG O/MG A)	=	O UPTAKE BY ALGAE (MG O/MG A)	=
N CONTENT OF ALGAE (MG N/MG A)	=	P CONTENT OF ALGAE (MG P/MG A)	=
ALG MAX SPEC GROWTH RATE (I/DAY)	=	ALGAE RESPIRATION RATE (I/DAY)	=
N HALF SATURATION CONST (MG/L)	=	P HALF SATURATION CONST (MG/L)	=
LIN ALG SHADE CO (I/H-UGCHA/L)	=	NLIN SHADE (I/H-(UGCHA/L)**2/3)	=
LIGHT FUNCTION OPTION (LFNOPT)	=	LIGHT SATURATION COEF (INT/MIN)	=
DAILY AVERAGING OPTION (LAVOPT)	=	LIGHT AVERAGING FACTOR (AFACT)	=
NUMBER OF DAYLIGHT HOURS (DLH)	=	TOTAL DAILY SOLAR RADTN (INT)	=
ALGY GROWTH CALC OPTION (LGROPT)	=	ALGAL PREF FOR NH3-N (PREFN)	=
ALG/TEMP SOLR RAD FACTOR (TFACT)	=	NITRIFICATION INHIBITION COEF	=
ENDATAIA			

FORMAT (8A4, F7.0, 2X, 8A4, F7.0)

*Data Type IA information, except the ENDATAIA may be omitted unless algae, nitrogen, or phosphorus are to be simulated.

Units Notation: H = depth, INT = light intensity

PARAMETER	ENGLISH UNITS	METRIC UNITS
Linear Algae Self Shade Coef.	l/ft-ugChla/L	l/m-ugChla/L
Nonlinear Algae Self Shade Coef.	$l/ft-(ugChla/L)^{2/3}$	l/m-(ugChla/L)
Light Saturation Coefficient (PAR)	Btu/ft^2-min	Langleys/min
Total Daily Solar Radiation (PAR)	Btu/ft^2	Langleys

EPA/NCASI STREAM QUALITY ROUTING MODEL - QUAL2E INPUT DATA CODING FORMS

FORM 4 of 24

DATA TYPE IB THETA VALUES

DATA TYPE	CODE	VALUE
THETA		
THETA		
ENDATAIB		

FORMAT (2A4, IX, 2A4, IX, F8.0)

EPA/NCASI STREAM QUALITY ROUTING MODEL - QUAL2E INPUT DATA CODING FORMS

FORM (5) of (24)

DATA TYPE 2 REACH IDENTIFICATION DATA

DATA TYPE	REACH IDENTIFICATION			RIVER MI/KM AT HEAD OF REACH		RIVER MI/KM AT END OF REACH
	ORDER	ALPHANUMERIC NAME				
STREAM REACH		RCH=	FROM		TO	
STREAM REACH		RCH=	FROM		TO	
ENDATA2						

FORMAT (3A4,3X,F5.0,5A4,3X,A4,3X,F10.0,4X,A2,4X,F10.0)

NOTE: Once data has been coded, reaches may be subdivided without having to renumber the whole system - see text for intructions.

EPA/NCASI STREAM QUALITY ROUTING MODEL - QUAL2E INPUT DATA CODING FORMS

FORM 6 of 24

DATA TYPE 3 FLOW AUGMENTATION DATA

DATA TYPE	ORDER OF REACH		NO. OF AUGMENT SOURCES AVAIL.	TARGET LEVEL DISSOLVED OXYGEN (MG/L)	ORDER OF AVAILABLE AUGMENTATION SOURCES					
					1st	2nd	3rd	4th	5th	6th
FLOW AUGMT SOURCES RCH=										
FLOW AUGMT SOURCES RCH=										
ENDATA3										

FORMAT (5A4, 5X, F5.0, 5X, F5.0, F10.0, 6F5.0)

These cards (except ENDATA3) may be deleted if flow augmentation is not used.

EPA/NCASI STREAM QUALITY ROUTING MODEL - QUAL2E INPUT DATA CODING FORMS

FORM 7 of 24

DATA TYPE 4 COMPUTATIONAL ELEMENT FLAG FIELD DATA

DATA TYPE	ORDER OF REACH		NO. OF COMP. ELEM.		COMPUTATIONAL ELEMENT FLAGS
1 2 3 4 5 6 7 8 9 10 11 12 13 14 15	16 17 18 19 20	21 22 23 24 25	26 27 28 29 30	31 32 33 34 35 36 37 38 39 40	1 2 3 4 5 6 7 8 9 10 11 12 13 14 15 16 17 18 19 20
F L A G F I E L D R C H =					41 42 43 44 45 46 47 48 49 50 51 52 53 54 55 56 57 58 59 60 61 62 63 64 65 66 67 68 69 70 71 72 73 74 75 76 77 78 79 80
F L A G F I E L D R C H =					
E N D A T A 4					

FORMAT (2A4, A2,5X,F5.0,5X, F5.0, 10X, 20F 2.0)

NOTE: If subdivision of reaches is necessary after initial system has been coded, it can be done without renumbering the entire system - see text under REACH INDENTIFICATION AND RIVER MI/KM DATA.

EPA/NCASI STREAM QUALITY ROUTING MODEL - QUAL2E INPUT DATA CODING FORMS

FORM 8 of 24

DATA TYPE 5 HYDRAULIC DATA

TRAPAZOIDAL CHANNELS	ORDER OF REACH		DISPN CONST	SIDE SLOPE 1	SIDE SLOPE 2	WIDTH (FEET, METERS)	SLOPE	MANNING'S N
DISCHARGE COEFFICIENTS	ORDER OF REACH		DISPN CONST	COEF ON Q FOR VELOCITY	EXPO ON Q FOR VELOCITY	COEF ON Q FOR DEPTH	EXPO ON Q FOR DEPTH	MANNING'S N
1 2 3 4 5 6 7 8 9 10 11 12 13 14 15	16 17 18 19 20	21 22	23 24 25 26 27 28 29 30	31 32 33 34 35 36 37 38 39 40	41 42 43 44 45 46 47 48 49 50	51 52 53 54 55 56 57 58 59 60	61 62 63 64 65 66 67 68 69 70	71 72 73 74 75 76 77 78 79 80
H Y D R A U L I C S	R C H =							
H Y D R A U L I C S	R C H =							
E N D A T A 5								
1 2 3 4 5 6 7 8 9 10 11 12 13 14 15	16 17 18 19 20	21 22	23 24 25 26 27 28 29 30	31 32 33 34 35 36 37 38 39 40	41 42 43 44 45 46 47 48 49 50	51 52 53 54 55 56 57 58 59 60	61 62 63 64 65 66 67 68 69 70	71 72 73 74 75 76 77 78 79 80

FORMAT (2A4, A2, 5X, F5.0, 2X, F8.0, 5F10.0)

NOTE: The discharge coefficients must be expressed to relate flow, velocity, and depth units as follows:

VARIABLE	ENGLISH UNITS	METRIC UNITS
Flow	ft^3/sec	m^3/sec
Velocity	ft/sec	m/sec
Depth	ft	m

EPA/NCASI STREAM QUALITY ROUTING MODEL - QUAL2E INPUT DATA CODING FORMS

DATA TYPE 5A TEMPERATURE AND LOCAL CLIMATOLOGY DATA

FORM 8a of 24

DATA TYPE	ORDER OF REACH		ELEVATION	DUST ATT'N COEF	CLOUDINESS	DRY BULB TEMP	WET BULB TEMP	BAROMETRIC PRESSURE	WIND SPEED	(not used)
1 2 3 4 5 6 7 8 9 10 11 12 13 14 15	16 17 18 19 20	21 22 23 24	25 26 27 28 29 30 31	32 33 34 35 36 37 38	39 40 41 42 43 44 45	46 47 48 49 50 51 52	53 54 55 56 57 58 59	60 61 62 63 64 65 66	67 68 69 70 71 72 73	74 75 76 77 78 79 80
TEMP/LCD RCH=										
TEMP/LCD RCH=										
ENDATA5A										
1 2 3 4 5 6 7 8 9 10 11 12 13 14 15	16 17 18 19 20	21 22 23 24	25 26 27 28 29 30 31	32 33 34 35 36 37 38	39 40 41 42 43 44 45	46 47 48 49 50 51 52	53 54 55 56 57 58 59	60 61 62 63 64 65 66	67 68 69 70 71 72 73	74 75 76 77 78 79 80

FORMAT (2A4, A2, 5X, F5.0, 4X, 8F7.0)

VARIABLE	ENGLISH UNITS	METRIC UNITS
Elevation	ft	m
Drybulb, Wetbulb Temps	F	C
Barometric Pressure	in Hg	millibars
Wind Speed	ft/sec	m/sec

EPA/NCASI STREAM QUALITY ROUTING MODEL - QUAL2E INPUT DATA CODING FORMS

FORM 9 of 24

DATA TYPE 6 BOD/DO COEFFICIENTS

DATA TYPE (1–15)	ORDER OF REACH (16–20)	BOD DEOX COEF (1/DAY) (21–28)	BOD SETT COEF (1/DAY) (29–36)	SOD * RATE (37–44)	K2 OPT (45–48)	REAERATION COEF (1/DAY) (49–56)	*COEQK2 or TSIVG COEF FOR OPT 8 (57–64)	*EXPQK2 or SLOPE FOR OPT 8 (65–72)	(not used) (73–80)
REACT COEF RCH=									
REACT COEF RCH=									
ENDATA6									

FORMAT (2A4, A2, 5X, F5.0, 3F8.0, F4.0, 3F8.0)

VARIABLE *	ENGLISH UNITS	METRIC UNITS
SOD Rate	gm/ft^2-day	gm/m^2-day
COEQK2, EXPQK2 (Opt. 7)	consistent with flow in ft^3/sec	consistent with flow in m^3/sec
TSIVG COEF (Opt. 8)	1/ft	1/m
SLOPE (Opt. 8)	ft/ft	m/m

EPA/NCASI STREAM QUALITY ROUTING MODEL — QUAL2E INPUT DATA CODING FORMS

FORM (10) of (24)

DATA TYPE 6A N AND P COEFFICIENTS

DATA TYPE	ORDER OF REACH	ORG-N HYDROLYSIS (1/DAY)	ORG-N SETT COEF (1/DAY)	NH-3 OXIDATION (1/DAY)	BENTHAL * SOURCE NH-3	NO-2 OXIDATION (1/DAY)	ORG-P DECAY (1/DAY)	ORG-P SETT COEF (1/DAY)	BENTHAL * SOURCE DIS-P
1 2 3 4 5 6 7 8 9 10 11 12 13 14 15 16 17 18 19	20 21 22 23 24	25 26 27 28 29 30 31	32 33 34 35 36 37 38	39 40 41 42 43 44 45	46 47 48 49 50 51 52	53 54 55 56 57 58 59	60 61 62 63 64 65 66	67 68 69 70 71 72 73	74 75 76 77 78 79 80
N AND P COEF RCH=									
N AND P COEF RCH=									
END ATA6A									
1 2 3 4 5 6 7 8 9 10 11 12 13 14 15 16 17 18 19	20 21 22 23 24	25 26 27 28 29 30 31	32 33 34 35 36 37 38	39 40 41 42 43 44 45	46 47 48 49 50 51 52	53 54 55 56 57 58 59	60 61 62 63 64 65 66	67 68 69 70 71 72 73	74 75 76 77 78 79 80

FORMAT (3A4,A2,5X,F5.0,8F7.0)

VARIABLE *	ENGLISH UNITS	METRIC UNITS
Benthal Source for NH3-N	mg/ft^2 -day	mg/m^2 -day
Benthal Source for DIS-P	mg/ft^2 -day	mg/m^2 -day

EPA/NCASI STREAM QUALITY ROUTING MODEL — QUAL2E INPUT DATA CODING FORMS

FORM (11) of (24)

DATA TYPE 6B ALGAE/OTHER COEFFICIENTS

DATA TYPE (1–19)	ORDER OF REACH (20–24)	CHLA TO ALGAE RATIO (25–31)	*ALGY SETT RATE (32–38)	*NON ALGAL LIGHT EXT COEF. (39–45)	COLI DECAY (I/DAY) (46–52)	ANC DECAY (I/DAY) (53–59)	ANC-SETT COEF (I/DAY) (60–66)	* BENTHAL SOURCE ANC (67–73)	(not used) (74–80)
ALG/OTHER COEF RCH=									
ALG/OTHER COEF RCH=									
ENDATA6B									

FORMAT (3A4, A2, 5X, F5.0, 7F7.0)

* VARIABLE	ENGLISH UNITS	METRIC UNITS
Algal Settling Rate	ft/day	m/day
Non-algal Light Extinction Coef.	1/ft	1/m
Benthal Source for Arbitrary Non Cons.	mg-Anc/ft^2-day	mg-Anc/ft^2-day

EPA/NCASI STREAM QUALITY ROUTING MODEL - QUAL2E INPUT DATA CODING FORMS

FORM 12 of 24

DATA TYPE 7 INITIAL CONDITIONS-1

DATA TYPE (1-19)	ORDER OF REACH (20-24)	TEMP (F, C) (25-31)	DISOLVED OXYGEN (MG/L) (32-38)	BOD (MG/L) (39-45)	CONS 1 (46-52)	CONS 2 (53-59)	CONS 3 (60-66)	ANC (67-73)	COLIFORM (NO./100ML) (74-80)
INITIAL COND-I RCH=									
INITIAL COND-I RCH=									
ENDATA7									

FORMAT(3A4, A2, 5X, F5.0, 8F7.0)

EPA/NCASI STREAM QUALITY ROUTING MODEL - QUAL2E INPUT DATA CODING FORMS

FORM 13 of 24

DATA TYPE 7A INITIAL CONDITIONS-2

DATA TYPE (1-19)	ORDER OF REACH (20-24)	CHL-A (μG/L) (25-31)	ORG-N (MG/L) (32-38)	NH_3-N (MG/L) (39-45)	NO_2-N (MG/L) (46-52)	NO_3-N (MG/L) (53-59)	ORG-P (MG/L) (60-66)	DIS-P (MG/L) (67-73)	(not used) (74-80)
INITIAL COND-2 RCH=									
INITIAL COND-2 RCH=									
ENDATA7A									

FORMAT (3A4, A2, 5X, F5.0, 7F7.0)

EPA/NCASI STREAM QUALITY ROUTING MODEL — QUAL2E INPUT DATA CODING FORMS

FORM (14) of (24)

DATA TYPE 8 INCREMENTAL FLOW 1

DATA TYPE (1–19)	ORDER OF REACH (20–24)	*INCREM. FLOW (25–31)	*TEMP (32–38)	DISSOLVED OXYGEN (MG/L) (39–44)	BOD (MG/L) (45–50)	CONS 1 (51–56)	CONS 2 (57–62)	CONS 3 (63–68)	ANC (69–74)	COLIFORM (NO./100ML) (75–80)
INCR INFLOW-I RCH=										
INCR INFLOW-I RCH=										
ENDATA8										

FORMAT (3A4, A2, 5X, F5.0, 2F7.0, 7F6.0)

*VARIABLE	ENGLISH UNITS	METRIC UNITS
Incremental Flow	ft^3/sec	m^3/sec
Temperature	F	C

EPA/NCASI STREAM QUALITY ROUTING MODEL - QUAL2E INPUT DATA CODING FORMS

FORM (15) of (24)

DATA TYPE 8A INCREMENTAL FLOW-2

DATA TYPE (1–19)	ORDER OF REACH (20–24)	CHL-A (μG/L) (25–31)	ORG-N (MG/L) (32–38)	NH3-N (MG/L) (39–45)	NO2-N (MG/L) (46–52)	NO3-N (MG/L) (53–59)	ORG-P (MG/L) (60–66)	DIS-P (MG/L) (67–73)	(not used) (74–80)
INCR INFLOW-2 RCH=									
INCR INFLOW-2 RCH=									
ENDATA8A									

FORMAT (3A4, A2, 5X, F5.0, 7F7.0)

EPA/NCASI STREAM QUALITY ROUTING MODEL - QUAL2E INPUT DATA CODING FORMS

DATA TYPE 9 STREAM JUNCTION DATA

FORM (16) of (24)

DATA TYPE	ORDER OF JUNCTION		JUNCTION IDENTIFICATION		ELEMENT TYPE: TYPE 3 NO. OF ELEMENT UPSTRM OF JUNC		ELEMENT TYPE: TYPE 4 NO. OF ELEMENT DNSTRM OF JUNC		ELEMENT TYPE: TYPE 2 NO. OF ELEMENT ON TRIB.
1–20	21–25	26–30	31–50	51–55	56–60	61–65	66–70	71–75	76–80
STREAM JUNCTION			JNC=						
STREAM JUNCTION			JNC=						
ENDATA9									

FORMAT (3A4, A3, 5X, F5.0, 5X, 5A4, 3(5X, F5.0)

EPA/NCASI STREAM QUALITY ROUTING MODEL - QUAL2E INPUT DATA CODING FORMS

FORM 17 of 24

DATA TYPE 10 HEADWATER-1

DATA TYPE (1-14)	ORDER OF HDW (15-19)	ALPHANUMERIC NAME (20-35)	HEADWATER FLOW* (36-44)	TEMP* (45-50)	DISSOLVED OXYGEN (MG/L) (51-56)	BOD (MG/L) (57-62)	CONS1 (63-68)	CONS2 (69-74)	CONS3 (75-80)
HEADWTR-1	HDW=								
HEADWTR-1	HDW=								
ENDATA10									

FORMAT (2A4, A2, 4X, F5.0, 4A4, F9.0, 6F6.0)

*VARIABLE	ENGLISH UNITS	METRIC UNITS
Headwater Flow	ft^3/sec	m^3/sec
Temperature	F	C

EPA/NCASI STREAM QUALITY ROUTING MODEL - QUAL2E INPUT DATA CODING FORMS

FORM (18) of (24)

DATA TYPE 10A HEADWATER-2

DATA TYPE	ORDER OF HDW	ANC	COLI (NO./100 ML)	CHL-A (μG/L)	ORG-N (MG/L)	NH3-N (MG/L)	NO2-N (MG/L)	NO3-N (MG/L)	ORG-P (MG/L)	DIS-P (MG/L)	(not used)
1 2 3 4 5 6 7 8 9 10 11 12 13 14 15	16 17 18 19 20	21 22 23 24 25 26	27 28 29 30 31 32	33 34 35 36 37 38	39 40 41 42 43 44	45 46 47 48 49 50	51 52 53 54 55 56	57 58 59 60 61 62	63 64 65 66 67 68	69 70 71 72 73 74	75 76 77 78 79 80
HEADWTR-2 HDW=											
HEADWTR-2 HDW=											
ENDATA10A											
1 2 3 4 5 6 7 8 9 10 11 12 13 14 15	16 17 18 19 20	21 22 23 24 25 26	27 28 29 30 31 32	33 34 35 36 37 38	39 40 41 42 43 44	45 46 47 48 49 50	51 52 53 54 55 56	57 58 59 60 61 62	63 64 65 66 67 68	69 70 71 72 73 74	75 76 77 78 79 80

FORMAT (2A4, A2, 5X, F5.0, 9F6.0)

EPA/NCASI STREAM QUALITY ROUTING MODEL — QUAL2E INPUT DATA CODING FORMS

FORM 19 of 24

DATA TYPE 11 POINT LOAD AND WITHDRAWAL-1

DATA TYPE (1–14)	ORDER OF LOAD (15–19)	ALPHANUMERIC NAME (20–31)	% TREAT-MENT (32–36)	INFLOW or WITHDRAWAL * (37–44)	TEMP * (45–50)	DISSOLVED OXYGEN (MG/L) (51–56)	BOD (MG/L) (57–62)	CONS 1 (63–68)	CONS 2 (69–74)	CONS 3 (75–80)
POINTLD-1 PTL=										
POINTLD-1 PTL=										
ENDATA11										

FORMAT (2A4, A1, 5X, F5.0, 3A4, F5.0, F8.0, 6F6.0)

* VARIABLE	ENGLISH UNITS	METRIC UNITS
Inflow or withdrawal	ft^3/sec	m^3/sec
Temperature	F	C

EPA/NCASI STREAM QUALITY ROUTING MODEL — QUAL2E INPUT DATA CODING FORMS

FORM 20 of 24

DATA TYPE 11A POINT LOAD AND WITHDRAWAL - 2

DATA TYPE	ORDER OF LOAD	ANC	COLI (NO./100 ML)	CHL-A (μG/L)	ORG-N (MG/L)	NH3-N (MG/L)	NO2-N (MG/L)	NO3-N (MG/L)	ORG-P (MG/L)	DIS-P (MG/L)	(not used)
POINTLD-2 PTL=											
POINTLD-2 PTL=											
ENDATA11A											

FORMAT (2A4, A2, 5X, F5.0, 9F6.0)

EPA/NCASI STREAM QUALITY ROUTING MODEL - QUAL2E INPUT DATA CODING FORMS

FORM (21) of (24)

DATA TYPE 12 DAM REAERATION COEFFICIENTS

DATA TYPE	DAM NO.	RCH. NO. OF DAM	ELE. NO. BELOW DAM	ADAM	BDAM	FRACTION FLOW OVER DAM FDAM	HEIGHT OF DAM HDAM (FT, M)
1 2 3 4 5 6 7 8 9 10 11 12 13 14 15 16 17 18 19	20 21 22 23 24	25 26 27 28 29 30	31 32 33 34 35 36	37 38 39 40 41 42	43 44 45 46 47 48	49 50 51 52 53 54	55 56 57 58 59 60
DAM DATA DAM=							
DAM DATA DAM=							
ENDATA12							
1 2 3 4 5 6 7 8 9 10 11 12 13 14 15 16 17 18 19	20 21 22 23 24	25 26 27 28 29 30	31 32 33 34 35 36	37 38 39 40 41 42	43 44 45 46 47 48	49 50 51 52 53 54	55 56 57 58 59 60

FORMAT (3A4, A2, 5X, F5.0, bF6.0)

EPA/NCASI STREAM QUALITY ROUTING MODEL - QUAL2E INPUT DATA CODING FORMS

FORM 22 of 24

DATA TYPE 13 DOWNSTREAM BOUNDARY - 1

DATA TYPE	TEMP (F, C)	DISSOLVED OXYGEN (MG/L)	BOD (MG/L)	CONS 1	CONS 2	CONS 3	ANC	COLIFORM (NO./100 ML)
DOWNSTREAM BOUNDARY-1								
ENDATA13								

DATA TYPE 13A DOWNSTREAM BOUNDARY - 2

DATA TYPE	CHL-A (μG/L)	ORG-N (MG/L)	NH3-N (MG/L)	NO2-N (MG/L)	NO3-N (MG/L)	ORG-P (MG/L)	DIS-P (MG/L)	(not used)
DOWNSTREAM BOUNDARY-2								
ENDATA13A								

FORMAT (6A4, 8F7.0)

EPA/NCASI STREAM QUALITY ROUTING MODEL – QUAL2E INPUT DATA CODING FORMS

FORM 23 of 24

LOCAL CLIMATOLOGICAL DATA

DATA TYPE (1–17)	MONTH, DAY AND YEAR (18–25)	HOUR OF DAY (26–30)	NET SOLAR RADIATION (31–40)	CLOUDINESS (41–48)	DRY BULB TEMP (49–56)	WET BULB TEMP (57–64)	BAROMETRIC PRESSURE (65–72)	WIND SPEED (73–80)
LOCAL CLIMATOLOGY								
LOCAL CLIMATOLOGY								

*Must be chronologically ordered. FORMAT (30X, F10.0, 5F8.0)

Net solar radiation is not required if temperature is simulated, but is only required for dynamic algae simulation when temperature is not simulated.

VARIABLE	ENGLISH UNITS	METRIC UNITS
Net Solar Radiation (PAR)	BTU/ft^2-hr	Langleys/hr
Wetbulb, Drybulb Temps	F	C
Barometric Pressure	in Hg	millibars
Wind Speed	ft/sec	m/sec

NOTE: These data must appear in a separate input data file (FORTRAN unit number 2) if dynamic/diurnal temperature simulations are being performed. See Section X - Climatological Data.

EPA/NCASI STREAM QUALITY ROUTING MODEL - QUAL2E INPUT DATA CODING FORMS

FORM 24 of 24

DO AND BOD REACH PLOT DATA

DATA TYPE	REACH NUMBERS IN ORDER FOR PLOTTING
	1 2 3 4 5 6 7 8 9 10 11 12 13 14
BEGIN	RCH
PLOT	RCH
BEGIN	RCH
PLOT	RCH

FORMAT (A4, 6X, I5); FORMAT (10X, 14I5)

BEGIN RCH = Id number of first reach in the plot.

PLOT RCH = Reach numbers in the proper order for plotting.

NOTE: Multiple plots are obtained by repeating the sequence of BEGIN RCH and PLOT RCH information (see User's Manual for example).

EPA/NCASI STREAM QUALITY ROUTING MODEL - QUAL2E INPUT CODING FORMS

Form 24A

PLOT OBSERVED DISSOLVED OXYGEN DATA

DATA TYPE	RIVER LOCATION (MI/KM)	MINIMUM DO (MG/L)	AVERAGE DO (MG/L)	MAXIMUM DO (MG/L)
DO TITLE:				
NUM LOCS:				
DO DATA				
DO DATA				
DO DATA				
DO DATA				
DO DATA				
DO DATA				
DO DATA				
DO DATA				
DO DATA				
DO DATA				
DO DATA				
DO DATA				
DO DATA				
NUM LOCS:				
DO DATA				
DO DATA				
DO DATA				
DO DATA				
DO DATA				
DO DATA				
DO DATA				
DO DATA				
DO DATA				

FORMATS: DO TITLE: (20A4)
NUM LOCS: (10X,I4)
DO DATA: (10X,4F10.0)

Notes: Observed DO DATA for multiple plots are input by repeating the sequence of NUM LOCS: and DO DATA information. These data must appear in a separate data file (FORTRAN unit number 2) from the QUAL2E input data file.

APPENDIX B
USER MANUAL FOR QUAL2E-UNCAS

I. Introduction

The following sections provide instructions for assembling the two application-specific input data files for an UNCAS simulation. The first provides the general specifications for the uncertainty analysis to be performed, and the second contains the input uncertainty information for each input variable.

II. General Specification File; ****.DAT

This data file, named and prepared by the user, contains the general requirements for performing a QUAL2E-UNCAS simulation. This input data file consists of nine data types, as follows.

UNCAS Data Type	Description
1	Heading
2	System Title
3	Uncertainty Option
4	Input Condition
5	Intermediate Output
6	Output Variables
7	Output Locations
8	Input Variables
9	Ending

Data Types 1 through 7 are read by subroutine UNDATA, whereas Types 8 and 9 are read by subroutines INSENS or IFOAMC as necessary. In all UNCAS data types, the first 30 columns contain default data type descriptive information (see UNCAS Input Coding Form).

A. UNCAS Data Type 1 - Heading.

This data type is a default header line for the beginning of the UNCAS general specification file. It consists of one line and is prepared in the following format.

Entry - Text	Position
"UNCAS1___*HEADING_____*"	Columns 1-30
"QUAL2E UNCERTAINTY ANALYSIS"	Columns 31-57

Note: The underscore, "_" indicates a space.

B. UNCAS Data Type 2 - System Title.

This data type contains a user-supplied descriptive title (50 alphanumeric characters) for the uncertainty simulations. It consists of one line and is formatted as follows.

Entry	Position
"UNCAS2___*SYSTEM_TITLE_____*"	Columns 1-30
User Title	Columns 31-80

C. UNCAS Data Type 3 - Uncertainty Option

Data type 3 is where the user specifies the particular type of uncertainty analysis to be performed. The descriptive text for this data type appears in the first 30 columns as follows.

"UNCAS3___*UNCERTAINTY_OPTION-*"

There are three uncertainty options--sensitivity analysis, first order error analysis, and monte carlo simulation. Also, if first order or monte carlo are selected, the user must supply the magnitude of the input pertubation, or number of monte carlo simulations, respectively. Data type 3 consists of one line prepared with the descriptive text described above, followed by one of these three options.

Entry	Position
"SENSITIVITY ANALYSIS"	Columns 31-50
or	
"FIRST ORDER ERROR ANALYSIS;"	Columns 31-57
Magnitude of input perturbation, %*	Columns 59-64
" % PERTURBATION"	Columns 66-79
or	
"MONTE CARLO SIMULATION:"	Columns 31-53
Number of monte carlo simulations	Columns 59-64
"SIMULATIONS"	Columns 66-76

(* Enter as a percent. If not specified, a default value of 5% is used.)

Note: UNCAS tests the four alphanumeric characters in columns 31-34 (i.e. "SENS", "FIRS", or "MONT") to determine the uncertainty analysis option desired.

D. UNCAS Data Type 4 - Input Condition.

This data type provides UNCAS with information concerning the particulars of the inputs to be modified. The 30 column descriptive text for this line of data is:

"UNCAS4___*INPUT_CONDITION____*"

If the sensitivity analysis option is being exercised, data type 4 conveys to UNCAS whether the inputs (specified in Data Type 8) are to be perturbed (a) singly or in groups or (b) using a factorial design strategy. For the factorial design option, the user must specify the number of input variables in the design. Currently UNCAS accommodates only 2 or 3 variable factorial designs. For sensitivity analysis, UNCAS data type 4 is completed with one of the following two selections.

Entry	Position
"SINGLE/MULTIPLE PERTURBATIONS"	Columns 31-59
or	
"2-LEVEL FACTORIAL DESIGN"	Columns 31-54
Number of input variables (2 or 3)	Column 63
"VARIABLES"	Columns 64-73

If the first order error analysis or the monte carlo simulation option is selected, data type 4 is used to specify which of the generic groups of input variables are to be varied. These groupings are defined according to the QUAL2E input data types and are specified using the following alphanumeric code.

QUAL2E Input Variables	QUAL2E Data Types	UNCAS Alphanumeric Code
Global	1, 1A, 1B	GLBL
Hydraulic/Climatology	5, 5A	HYDR
Reaction Coefficient	6, 6A, 6B	RXNC
Incremental Flow	8, 8A	FFIF
Headwater Conditions	10, 10A	FFHW
Point Loads	11, 11A	FFPL
Dams	12	FFDM

For the first order and monte carlo options, data type 4 is completed with one of the following two selections.

Entry	Position
"ALL INPUTS"	Columns 31-40
or	
"GENERIC GROUPS"	Columns 31-44
1st alphanumeric code	Columns 47-50
2nd alphanumeric code	Columns 52-55
3rd alphanumeric code	Columns 57-60
4th alphanumeric code	Columns 62-65
5th alphanumeric code	Columns 67-70
6th alphanumeric code	Columns 72-75
7th alphanumeric code	Columns 77-80

Any number (from 1-7) of groups may be specified and only the QUAL2E inputs in that (those) group(s) will be perturbed in the uncertainty analysis. Note: UNCAS tests the four alphanumeric characters in columns 31-34 (i.e. "SING," "2-LE," "ALL_" or "GENE") to determine the input condition desired.

E. UNCAS Data Type 5 - Intermediate Output

With data type 5, the user can specify whether any intermediate output is desired. Intermediate output is defined as line printer output for each uncertainty simulation. The 30 column descriptive text for this line of data is:

"UNCAS5___*INTERMED_OUTPUT____*"

UNCAS recognizes three options for intermediate output: none, a complete QUAL2E final summary, and a limited output summary. The limited intermediate output summary consists of an echo print of the inputs that have been perturbed for the uncertainty simulation, a summary of the steady-state temperature and algae convergence computations, and a tabulation of the base and new values of the ouptut variables at the locations specified (UNCAS Data Type 7). Entries for data type 5 are completed with one of the following 3 selections.

Entry	Position
"NONE"	Columns 31-34
or	
"COMPLETE QUAL2E FINAL SUMMARY"	Columns 31-59
or	
"LIMITED"	Columns 31-37

Note: because of the potential for voluminous output, the second and third options are not available for monte carlo simulation. UNCAS tests the four alphanumeric characters in columns 31-34 (i.e. "NONE", "COMP", or "LIMI") to determine the intermediate output desired.

F. UNCAS Data Type 6 - Output Variables.

Data type 6 is used to constrain the list of output variables for which uncertainty results will be computed. These constraints are applied in a manner analogous to the input variable constraints in data type 4. The user simply specifies the generic groups of output variables for which uncertainty results are desired. The 30 column descriptive text for this line of data is:

"UNCAS5___*OUTPUT_VARIABLES___*"

The generic output groups are named "HYDRAULIC," "QUALITY," AND "INTERNAL." The hydraulic group consists of 10 output variables (flow, depth, velocity, dispersion,etc.) associated with the hydraulic output from QUAL2E. The quality group consists of the values of the 17 state variables simulated by QUAL2E. The internal group is made up of 9 diagnostic or internal variables associated with the algal, nutrient, light interactions in QUAL2E (i.e. algal growth rate p minus r and p/r ratio, light and nutrient factors in the growth rate computation, nitrification inhibition factor, etc.). This data type is completed by adding the names of the generic output variable groups to the data type 6 line as follows.

Entry	Position
Generic Output Group 1	Columns 31-40
Generic Output Group 2	Columns 46-55
Generic Output Group 3	Columns 61-70

Note: UNCAS tests the four alphanumeric characters in columns 31-34, 46-49, and 61-64 (i.e., "HYDR," "QUAL," or "INTE") to determine the generic group of output variables to be analyzed. They may be placed in any order in the appropriate positions.

G. UNCAS Data Type 7 - Output Locations.

This data type is used to define the locations in the basin where the output variables are to be examined for uncertainty analysis. The 30 column descriptive text for UNCAS data type 7 is:

"UNCAS7___*OUTPUT_LOCATIONS___*"

UNCAS will accept a maximum of 5 locations in the basin for output analysis. They are supplied as a single line in the form of reach and element number as follows.

Entry	Position
Location 1 (Reach and Element Number)	Columns 33-35, 36-38
Location 2 (Reach and Element Number)	Columns 41-43, 44-46
Location 3 (Reach and Element Number)	Columns 49-51, 52-54
Location 4 (Reach and Element Number)	Columns 57-59, 60-62
Location 5 (Reach and Element Number)	Columns 65-67, 68-70

Note: Reach and element numbers must be right-justified in their appropriate column fields.

H. UNCAS Data Type 8 - Input Variables

This data type is used to supply UNCAS with the input variable specifications for performing sensitivity analysis. It is not required for the first order error analysis and monte carlo simulation options. The 30-column descriptive text for UNCAS data type 8 is:

"UNCAS8___*INPUT_VARIABLES*"

This data type will consist of one or more lines, depending on how many sensitivity simulations are desired and/or on how many variables are to be sensitized in a given simulation.

The information in this data type is designed to handle any of three different input conditions for sensitivity analysis: one variable at a time, variables in groups, or factorially designed. The data on each line consists of specifying the input condition, the number of variables to be sensitized, the name of the input variable, and the magnitude of the perturbation.

For a one variable at a time simulation, one line of input is required as follows.

Entry	Position
"SINGLE"	Columns 31-36
Number of inputs perturbed	Column 45
Input variable code	Columns 48-56
Magnitude of perturbation, %	Columns 58-63

The number of inputs perturbed with this option is always 1. The input variable codes are 8 alphanumeric characters as shown in Table B-1. This line of data may be repeated for one variable at a time sensitivity simulations with other variables or other levels of perturbation.

For sensitivity analyses where more than one variable is perturbed, one line of input is required for each input variable to be altered, as follows.

Entry	Position
"MULTIPLE"	Columns 31-38
Number of inputs perturbed	Column 45
Input variable code	Columns 49-56
Magnitude of perturbation, %	Columns 58-63

UNCAS limits the number of inputs perturbed for this option to be either 2 or 3, thus requiring 2 or 3 lines of UNCAS data type 8, respectively. The input variable codes are shown in Table B-1. As with one variable at a time simulations, groups of multiple variable sensitivity simulations may appear one after the other in this data type.

For sensitivity analysis using variables in a factorically designed configuration, one line of input is required for each input variable as follows.

Entry	Position
"FACTORIAL"	Columns 31-39
Number of Inputs perturbed	Column 45
Input variable code	Columns 49-56
Magnitude of perturbation, %	Columns 58-63

UNCAS limits the number of inputs perturbed in the factorial design option to be either 2 or 3, thus requiring 2 or 3 lines of UNCAS data type 8, respectively. The input variable codes are shown in Table B-1. UNCAS automatically sets up conditions for each of the 4 or 8 factorial design simulations. As with the other sensitivity analysis options, groups of factorial design conditions may appear one after the other in this data type.

Note: UNCAS tests the four alphanumeric characters in column 31-34 (i.e. "SING", "MULT", and "FACT") to determine the sensitivity analysis option desired. UNCAS also allows the user to mix the sensitivity analysis option types in a single execution of the program; however, the maximum number of sensitivity simulations is 120. This data type is not required for the first order error analysis or monte carlo simulation options.

I. UNCAS Data Type 9 - Ending.

This data type is a default ending line that signifies the end of the general specification file. It consists of one line and is prepared in the following format.

Entry - Text	Position
"UNCAS9___*ENDING_____*"	Columns 1-30
"ENDUNCERTAINTY"	Columns 31-44

III. Input Variance Data File; INVAR.DAT.

This data file contains the uncertainty information for each input variable in QUAl2E. An example of this file containing a set of default data is provided with the UNCAS package. However, the user must adjust the default data to values suitable for the particular case being modeled. The data contained in INVAR.DAT consists of the variable code name, its QUAl2E data type, its coefficient of variation, and its probability density function. The first two lines of the file are title and header lines. Subsequent lines contain the variance information, formatted as follows.

Entry	Position
Input Variable Name	Columns 3-30
Input Variable Code	Columns 36-43
QUAL2E Data Type	Columns 49-50
Coefficient of Variation	Columns 56-60
Probability Density Function	Columns 68-69

The input variable codes are shown in Table B-1. The two character codes for probability density function are "NM" for normal distribution and "LN" for log-normal.

TABLE B-1 INPUT VARIABLE NAME CODES

Input variable Name	Input Code	QUAL2E Data Type
Evaporation coef - AE	ECOEF-AE	1
Evaporation coef - BE	ECOEF-BE	1
Oxygen uptake by NH3 oxdtn	NH3OXYUP	1A
Oxygen uptake by NO2 oxdtn	NO2OXYUP	1A
Oxygen prod by algae grwth	AGYOXYPR	1A
Oxygen uptake by algy resp	AGYOXYUP	1A
Nitrogen content of algae	AGYNCON	1A
Phosphorus content of algy	AGYPCON	1A
Algy max spec growth rate	AGYGROMX	1A
Algae respiration rate	AGYRESPR	1A
Nitrogen half sat'n coef	NHALFSAT	1A
Phosphorus half sat'n coef	PHALFSAT	1A
Linear alg self shade coef	AGYEXTLN	1A
Non-lin alg self shade co	AGYEXTNL	1A
Light sat'n coefficient	LSATCOEF	1A
Light averaging factor	LAVGFACT	1A
Number of daylight hours	NUMBDLH	1A
Total daily solar radt'n	TDYSOLAR	1A
Alg pref for ammonia-N	APREFNH3	1A
Alg to temp solar factor	A/TFACT	1A
Nitrification inhib fact	NHIBFACT	1A
5-D to ult BOD conv r-cof	5TOUBODK	1
Temp coef BOD decay	TC/BODDC	1B
Temp coef BOD settling	TC/BODST	1B
Temp coef O2 reaeration	TC/REAER	1B
Temp coef sed O2 demand	TC/SOD	1B
Temp coef organic-N decay	TC/NH2DC	1B
Temp coef organic-N set	TC/NH2ST	1B
Temp coef ammonia decay	TC/NH3DC	1B
Temp coef ammonia srce	TC/NH3SC	1B
Temp coef nitrite decay	TC/NO2DC	1B
Temp coef organic-P decay	TC/PRGDC	1B
Temp coef organic-P set	TC/PRGST	1B
Temp coef diss-P source	TC/PO4SC	1B
Temp coef algy growth	TC/ALGRO	1B
Temp coef algy respr	TC/ALRES	1B
Temp coef algy settling	TC/ALSET	1B
Temp coef coli decay	TC/CLIDC	1B
Temp coef ANC decay	TC/ANCDC	1B
Temp coef ANC settling	TC/ANCST	1B
Temp coef ANC source	TC/ANCSC	1B
Daily averaging option	DIURNOPT	1A
Light function option	LFNOPTN	1A
Algae growth calc option	AGYGROPT	1A

Table B-1 (continued)

Input Variable Name	Input Code	QUAL2E Data Type
Dispersion corr constant	DISPSN-K	5
Coef on flow for velocity	COEFQV-A	5
Expo on flow for velocity	EXPOQV-B	5
Coef on flow for depth	COEFQH-C	5
Expo on flow for depth	EXPOQH-D	5
Manning's roughness n	MANNINGS	5
Side slope 1	TRAP-SS1	5
Side slope 2	TRAP-SS2	5
Bottom width	TRAP-WTH	5
Slope of channel	TRAP-SLP	5
Mean elevation of reach	ELEVATIN	5A
Dust attenuation coef	DUSTATTN	5A
Fraction of cloudiness	CLOUD	5A
Dry bulb air temperature	DRYBULB	5A
Wet bulb air temperature	WETBULB	5A
Barometric pressure	ATMPRES	5A
Wind speed	WINDVEL	5A
CBOD oxidation rate	BOD DECA	6
CBOD settling rate	BOD SETT	6
SOD uptake rate	SOD RATE	6
Reaeration rate option 1	K2-OPT1	6
Coef on flow for K2 opt-7	CQK2-OP7	6
Expo on flow for K2 opt-7	EQK2-OP7	6
Coef for K2 (TSIV) opt-8	K2COEF-8	6
Slope for K2(TSIV) opt-8	K2SLOP-8	6
Organic-N hydrolysis rate	NH2 DECA	6A
Organic-N settling rate	NH2 SETT	6A
Ammonia-N decay rate	NH3 DECA	6A
Ammonia-N bethal source	NH3 SRCE	6A
Nitrite-N decay rate	NO2 DECA	6A
Organic-P hydrolysis rate	PORG DEC	6A
Organic-P settling rate	PORG SET	6A
Dissolved-P Benthal srce	DISP SRC	6A
Chla to algae ratio	CHLA/ART	6B
Algae settling rate	ALG SETT	6B
Light ext coefficient	LTEXTNCO	6B
Coliform decay rate	COLI DEC	6B
ANC decay rate	ANC DECA	6B
ANC settling rate	ANC SETT	6B
Initial temperature	INITTEMP	7A
Reaeration equation opt.	K2OPTION	6
Incremental flow	INCRFLOW	8
Incr-temperature	INCRTEMP	8
Incr-dissolved oxygen	INCRDO	8

Table B-1 (continued)

Input Variable Name	Input Code	QUAL2E Data Type
Incr-BOD	INCRBOD	8
Incr-consv min 1	INCRCM1	8
Incr-consv min 2	INCRCM2	8
Incr-consv min 3	INCRCM3	8
Incr-arbitrary non-cons	INCRANC	8
Incr-coliform	INCRCOLI	8
Incr-algae	INCRCHLA	8A
Incr-organic-N	INCRNH2N	8A
Incr-ammonia-N	INCRNH3N	8A
Incr-nitrite-N	INCRNO2N	8A
Incr-nitrate-N	INCRNO3N	8A
Incr-organic-phos	INCRPORG	8A
Incr-dissolved-phos	INCRDISP	8A
Headwater flow	HWTRFLOW	10
Hwtr-temperature	HWTRTEMP	10
Hwtr-dissolved oxygen	HWTRDO	10
Hwtr-BOD	HWTRBOD	10
Hwtr-consv min 1	HWTRCM1	10
Hwtr-consv min 2	HWTRCM2	10
Hwtr-consv min 3	HWTRCM3	10
Hwtr-arbitrary non-cons	HWTRANC	10A
Hwtr-coliform	HWTRCOLI	10A
Hwtr-algae	HWTRCHLA	10A
Hwtr-organic-N	HWTRNH2N	10A
Hwtr-ammonia-N	HWTRNH3N	10A
Hwtr-nitrite-N	HWTRNO2N	10A
Hwtr-nitrate-N	HWTRNO3N	10A
Hwtr-organic-phos	HWTRPORG	10A
Hwtr-dissolved-phos	HWTRDISP	10A
Ptld-trtmnt factor	PTLDTFCT	11
Point load flow	PTLDFLOW	11
Ptld-temperature	PTLDTEMP	11
Ptld-dissolved oxygen	PTLDDO	11
Ptld-BOD	PTLDBOD	11
Ptld-consv min 1	PTLDCM1	11
Ptld-consv min 2	PTLDCM2	11
Ptld-consv min 3	PTLDCM3	11
Ptld-arbitrary non-cons	PTLDANC	11A
Ptld coliform	PTLDCOLI	11A
Ptld-algae	PTLDCHLA	11A
Ptld-organic-N	PTLDNH2N	11A
Ptld-ammonia-N	PTLDNH3N	11A
Ptld-nitrite-N	PTLDNO2N	11A
Ptld-nitrate-N	PTLDNO3N	11A
Ptld-organic phos	PTLDPORG	11A
Ptld-dissolved-phos	PTLDDISP	11A
Dam coefficient a	DAMSACOF	12
Dam coefficient b	DAMSBCOF	12
Fraction of flow over dam	DAMSFRAC	12

QUAL2E - UNCAS INPUT DATA CODING FORM - GENERAL UNCAS SPECIFICATIONS

UNCAS DATA TYPE	INPUT DATA, SHOWING OPTIONS (or) FOR DATA TYPES 3, 4, 5 AND 8
UNCAS1	*HEADING *QUAL2E UNCERTAINTY ANALYSIS
UNCAS2	*SYSTEM TITLE *
UNCAS3	*UNCERTAINTY OPTION *SENSITIVITY ANALYSIS FIRST ORDER ERROR ANALYSIS: % PERTURBATION MONTE CARLO SIMULATION: SIMULATIONS
UNCAS4	*INPUT CONDITION *SINGLE/MULTIPLE PERTURBATIONS 2-LEVEL FACTORIAL DESIGN -VARIABLES GENERIC GROUPS ALL INPUTS
UNCAS5	*INTERMED OUTPUT *NONE COMPLETE QUAL2E FINAL SUMMARY
UNCAS6	*OUTPUT VARIABLES *
UNCAS7	*OUTPUT *
UNCAS8	*INPUT VARIABLES *SINGLE MULTIPLE FACTORIAL
UNCAS9	*ENDING *END UNCERTAINTY

UNCAS1 : (A4,1X,I1)
UNCAS2 : (A4,1X,I1,24X,12A4,A2)
UNCAS3 : (A4,1X,I1,24X,A4,24X,F6.0)
UNCAS4 : (A4,1X,I1,24X,A4,28X,I1) or (A4,1X,I1,24X,A4,11X,7(1X,A4))
UNCAS5 : (A4,1X,I1,24X,A4)
UNCAS6 : (A4,1X,I1,24X,A4,3(A4,11X))
UNCAS7 : (A4,1X,I1,24X,5(2X,2F3.0))
UNCAS8 : (A4,1X,I1,24X,A4,10X,I1,3X,2A4,IX,F6.0)

Notes:

1. All data types consist of 1 line, except UNCAS8 which may have more than one.
2. Blank lines between data types shown here for clarity. Actual input data file has no blank lines.

APPENDIX C

QUAL2E-UNCAS Example Application

A. Introduction

The material in this appendix provides an example of how the uncertainty methodologies in QUAL2E-UNCAS can be applied to a QUAL2E data set. The sole purpose of this section is to demonstrate the utility of uncertainty analysis rather than to provide a definitive analysis of the river system from which the data were obtained. The example input data files and some of the output data files that were used in this application are provided with the model code distributed by the Center for Water Quality Modeling (CWQM).

B. Withlacoochee River Basin

The data used to demonstrate the capabilities of QUAL2E-UNCAS were obtained from a USEPA survey of the Withlacoochee River during October 1984 (Koenig, 1986). In this study, water quality simulations were examined for portions of the river subjected to both municipal and industrial waste loads. In addition there is a significant accretion of flow from groundwater inputs. The river has a uniform low slope, but is characterized by alternating shoals and pools (often in excess of 25 feet deep). Average depths during the survey periods were 5.2 to 14.8 feet, widths were 90 to 140 feet, and flows varied from 150 cfs at the headwater to 660 cfs at the end of the system. Water quality is affected by algal activity resulting from municipal waste discharges above the section of stream studied. The addition of industrial waste at RM 24, however, dramatically reduces light penetration to the extent that the algal population diminishes in the downstream direction.

A location map of the basin is shown in Figure C-1 and a plot of observed and modeled dissolved oxygen concentrations is presented in Figure C-2. Ten state variables were simulated in this study, temperature, dissolved oxygen, carbonaceous BOD, four nitrogen forms, (organic, ammonia, nitrite, and nitrate), two phosphorus forms, (organic and dissolved), and algae as chlorophyll a. A summary of the calibrated inputs and their variance estimates for the uncertainty analysis is shown in Table C-1. The calibrated values in general were obtained by adjusting field or laboratory measurements of the specific model inputs. The variance estimates were computed from replicate data taken during the survey period and by inference from other published data. (McCutcheon, 1985 and Bowie et al., 1985)

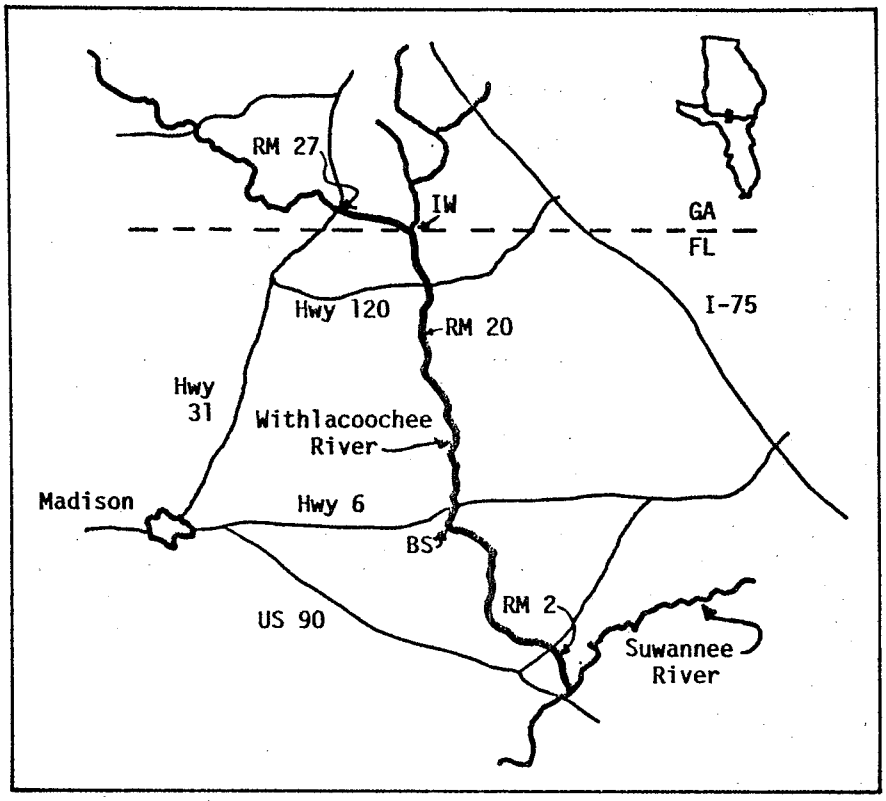

Fig. C-1. Location map of the Withlacoochee River basin.

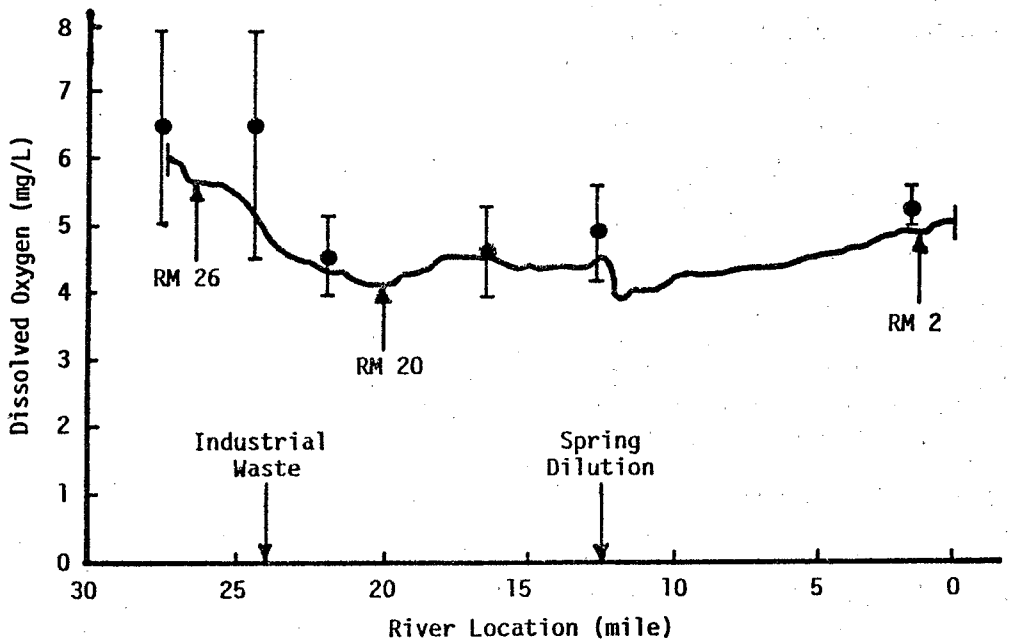

Fig. C-2. Observed and predicted dissolved oxygen concentrations.

C. First Order Error Analysis (FOEA)

Table C-2 shows the first order error analysis (FOEA) results for the output variables of CBOD and DO at three locations in the Withlacoochee system: an upstream location (RM 26), a midpoint near the dissolved oxygen sag (RM 20), and a downstream location (RM 2). For the CBOD sensitivity coefficients in Table C-2a, it is clear that the input forcing functions dominate model sensitivity. In general, point load and headwater flows and CBOD have the largest sensitivity coefficients, however, their effects change with location in the system. Headwater inputs dominate sensitivity in the upper reaches of the river and decrease in importance as one

TABLE C-1 Summary of Input Data for QUAL2E-UNCAS Simulations - Withlacoochee River Survey 1984

Input Parameter or Coefficient	Base Case (Mean) Values	Relative Standard Deviations (%)
Hydraulic Data (7)*		
Flows (cfs)	150 - 660	3%
Depths (ft)	5.2 - 14.8	8%
Velocities (fps)	.12 - .78	8%
Others	a,b	10 - 20%
Reaction Coefficients (8)		
CBOD Decay (1/day)	.04 - .10	15%
Reaeration (1/day)	.08 - .80	13%
SOD (gm/ft^2-day)	.04 - .13	12%
N, P, Algae	a,b	15 - 25%
Algae, Nutrient, Light Coefficients (17)		
Maximum Growth Rate (1/day)	1.3	10%
Respiration Rate (1/day)	.15	10%
Others	a,b	10%
Climatology, Temperature Inputs (23)		
Wet, Dry Bulb Air Temps (^oF)	64.3, 74.5	2%
Temperature Coefficients	1.00 - 1.083	3%
Others	a,b	1 - 15%
Headwater, Incremental, Point Loads (27)		
DO, Temperature	a	1 - 3%
CBOD, N, P, Algae	a	8 - 25%

(a) Basin specific values from Koenig, 1986.
(b) Typical values from Table III-3 of this report.

* Value in parentheses is the number input variables of the type indicated.

TABLE C-2 Summary of First Order Simulations for Withlacoochee River

(a) Simulation Variable: CBOD

Input Variable	Relative Std Dev (%)	Sensitivity Coefficients RM 26	RM 20	RM 2	Components of Variance (%) RM 26	RM 20	RM 2
CBOD Decay	15	-.06 (3)*	-.11	-.22	1	2	8
Incr Flow	3	-.05	-.22	-.37 (3)	1	1	1
HW Flow	3	.05	-.44 (3)	-.05	1	1	1
HW Temp	1	-.11 (2)	-.13	-.16	1	1	1
HW CBOD	15	.98 (1)	.24	.18	99	9	6
Ptld Flow	3	.00	.67 (2)	.43 (2)	0	3	1
Ptld CBOD	15	.00	.74 (1)	.69 (1)	0	84	79
	Standard Deviation of Simulated CBOD (mg/L)				0.35	0.76	0.27
				(%)	15	12	12

(b) Simulation Variable: Dissolved Oxygen

Velocity	8	.03	.05	-.26 (2)	1	2	13
CBOD Decay	15	-.02	-.12	-.03	1	9	1
SOD	5	-.05 (3)	-.23	.09	5	20	3
Reaeration	13	.04	.31 (3)	.40 (1)	4	45	77
Incr Temp	1	-.01	-.15	-.17 (3)	1	1	1
HW Temp	1	-.25 (2)	-.70 (1)	-.13	1	1	1
HW DO	3	.92 (1)	.55 (2)	.04	84	8	1
	Standard Deviation of Simulated DO (mg/L)				0.18	0.27	0.30
				(%)	3	6	6

*( ) = rank with 1 being highest

proceeds downstream. At the downstream location, the sensivity of CBOD to point load and incremental flow inputs is strong. The sensitivity to the biochemical reaction coefficient grows in magnitude in the direction of flow, but is substantially smaller than the values associated with the point load forcing functions.

Table C-2a also presents the components of variance for the modeled CBOD output. These results show a similar, but somewhat modified pattern as the sensitivity coefficients. The headwater CBOD is the dominant contributor (99%) to CBOD variability in the upper reaches of the basin. The point load CBOD values are the primary variance component elsewhere in the river (84% at RM 20 and 79% at RM 2). The variance contribution from the CBOD rate coefficient grows in importance as one proceeds downstream, but is at least an order of magnitude lower than that from the CBOD point loads. In the downstream portion of the basin, the variance contributions from the headwater inputs are small, as one would expect. It is interesting to note that although the hydraulic inputs (incremental, point load, and headwater flow) have sensitivity coefficients that rank high, their contribution to CBOD variance is low because the relative standard deviation of these inputs is low (3%) compared to the CBOD loads (15%). The sensitivity coefficients and components of variance results at the sag point (RM 20) clearly show the upstream to downstream transition of the dominant input components. The total variability in simulated CBOD estimated by the first order analysis, when expressed as a standard deviation, varies from 0.35 mg/L to 0.76 mg/L to 0.27 mg/L as one proceeds through the basin. This prediction error is approximately 15% and is comparable to the magnitude of the error in the CBOD input forcing functions.

The FOEA results for dissolved oxygen are presented in Table C-2b. As contrasted with CBOD, the only forcing functions having large DO sensitivity coefficients are the headwater inputs, not the point load inputs. Furthermore, DO is much more sensitive to temperature inputs than is CBOD. As with CBOD, practically all the DO sensitivity in the upper reaches can be attributed to headwater DO; however as one proceeds downstream, DO loses sensitivity to the headwater condition. Next in importance in terms of DO sensitivity are the reaeration rate coefficient and velocity, both characteristic of system hydraulics. The biochemical factors of sediment oxygen demand and CBOD rate coefficient follow in rank.

Similar patterns of dissolved oxygen sensitivity are apparent from examining the components of variance (Table C-2b). The importance of reaeration and SOD is striking as is the relatively small impact of CBOD decay. The temperature inputs, while having large sensitivity coefficients, provide a minimum contribution to DO variance. Although algae dynamics were simulated in this application, their effect on DO uncertainty was negligible both in terms of sensitivity coefficient and components of variance. The total variability in simulated DO when expressed as a standard deviation increases in the downstream direction varying from 0.18 mg/L to 0.30 mg/L and averaging about 5% of the simulated DO.

D. Effect of Model Non-linearity

First order error analysis uses the linear approximation to compute an estimate of output variance. The validity of that approximation can be assessed by computing the sensitivity coefficients for both large and small values of ΔX, the input perturbation (see Eq. VI-2). Small changes in the normalized sensitivity coefficient indicate near linearity of the state variable over the range of perturbed input values, whereas large changes in sensitivity reflect important nonlinear effects. Table C-3 contains values of the normalized sensitivity coefficients for the state variables DO and chlorophyll a for input pertubations, ΔX, ranging from -20 to +20 percent. The input variables selected for analysis are those having the largest sensitivity coefficients.

For dissolved oxygen (Table C-3a), the reaeration and headwater temperature inputs show the largest relative changes in sensitivity, indicating that these variables have the largest nonlinear effects on DO. The relative changes in sensitivity coefficient for the two inputs, however, are only 9 and 16%, respectively, suggesting that the nonlinear effects are not

TABLE C-3 Normalized Sensitivity Coefficients for Various Sizes of Input Perturbations (Withlacoochee RM 20)

(a) Simulation Variable: Dissolved Oxygen (ug/L)

Input Variable	Magnitude of Input Perturbation % -20%	-1%	+1%	+20%	Relative Change (%)
CBOD Decay	-.12	-.12	-.12	-.12	0
SOD	-.23	-.23	-.22	-.23	0
Reaeration	.33	.31	.31	.30	-9
HW Temp	-.66	-.69	-.70	-.77	+16
HW DO	.55	.55	.55	.55	0
Std. Dev. (mg/L)	.28	.27	.27	.26	-7

(b) Simulation Variable: (Chlorophyll a (ug/L)

Max Growth Rate	.40	.41	.42	.43	+7
Respiration	-.37	-.36	-.35	-.34	-8
Chl a/Agy-B	-1.24	-1.01	-.98	-.83	-33
HW Flow	.28	.24	.25	.21	-25
HW Chl a	.96	.95	.96	.94	-2
Std. Dev. (ug/L)	3.72	3.12	3.06	2.64	-29

strong. The other three variables, CBOD decay, SOD, and headwater DO have normalized sensitivity coefficients that are essentially constant. Thus their impacts are, for practical purposes, linear for the conditions of this simulation. The net effect from all model input nonlinearities is manifest in the FOEA estimate of dissolved oxygen standard deviation, which decreases by 7% as the magnitude of the input perturbation changes fom -20 to +20 percent.

Similar, but more pronounced patterns are observed for the state variable, chlorophyll a (Table C-3b). Two input variables, the ratio of chlorophyll a to algal biomass (Chla/Agy-B) and headwater flow exhibit large nonlinear effects on chlorophyll a. The maximum algal growth rate and the algal respiration rate show modest nonlinearities in sensitivity, while sensitivity to headwater chlorophyll a is essentially constant. The net FOEA estimate of standard deviation of chlorophyll a decreases by 29% over the range of input perturbations. Thus the effects of model nonlinearities appear to be stronger with chlorophyll a than with dissolved oxygen.

Analysis of other state variables showed changes in FOEA estimates of standard deviation of about 7% for algal growth rate, 5% for temperature and less than 5% for all others, including CBOD, the nitrogen forms and the phosphorus forms (see Table C-5). Note that, in all cases, the FOEA estimate of standard deviation decreases as the magnitude of the input perturbation increases over the range of -20 to +20%. It is curious that the large effect of model nonlinearities to chlorophyll a are not reflected in the dissolved oxygen sensitivites. This observation is perhaps explained by the fact that the largest input contributor to nonlinearity effects on chlorophyll a is a units conversion factor--the ratio of chlorophyll a to algal biomass. This factor does not serve as a linkage between the chlorophyll a and dissolved oxygen kinetic expressions in QUAL2E. The algal growth and respiration rates do provide that linkage, however, and the extent of their nonlinearities are comparable with that of dissolved oxygen, about 7%.

E. Monte Carlo Simulations

The monte carlo simulation output in QUAL2E-UNCAS provides summary statistics and frequency distributions for the state variables at specific locations in the basin. Table C-4 contains the mean, minimum, maximuim, range, standard deviation, coefficient of variation, and skew coefficient for simulated dissolved oxygen and chlorophyll a at the upstream, midpoint, and downstream locations in the Withlacoochee basin. All summary statistics are based on 2000 monte carlo simulations using the same input variances that were employed in the first order error analysis. Input probability distributions were assumed to be normal.

There is very good agreement between the calibrated mean and simulated mean for dissolved oxygen. Differences are less than 0.5%. The differences between calibrated and simulated means for chlorophyll a average about 3% and may be attributed in part to the previously described nonlinearities in chlorophyll a. For dissolved oxygen, the standard deviation grows in the

TABLE C-4 Summary Statistics from 2000 Monte Carlo Simulations for Withlacoochee River

Statistic	Dissolved Oxygen (mg/L) RM 26	RM 20	RM 2	Chlorophyll a (ug/L) RM 26	RM 20	RM 2
Calibrated Mean	5.83	4.48	5.06	18.1	14.4	6.6
Simulated Mean	5.82	4.47	5.05	18.9	15.0	6.6
Minimum	5.26	3.47	3.69	10.2	2.8	3.0
Maximum	6.41	5.31	5.89	53.8	41.4	22.2
Range	1.15	1.84	2.20	45.6	33.6	19.2
Std. Deviation	0.18	.28	.31	4.25	3.48	1.87
Coef. Variation	3.0%	6.2%	6.2%	23.5%	24.2%	28.4%
Skew Coef.	.01	-.15	-.20	1.73	1.60	1.46
Std. Deviation from FOEA	0.18	0.27	0.30	3.54	2.94	1.62

downstream direction. This phenomenon is attributable to the fact that dissolved oxygen never recovers to approach saturation (it lies in the 50 to 70% range) and to the cumulative effect of model input uncertainty as it propagates through the system. For chlorophyll a, the standard deviation decreases steadily in the downstream direction principally because the algal biomass concentration is also decreasing. The decrease in algal biomass concentration results from a lower algal growth rate attributable to reduced light penetration caused by color in the industrial waste discharge at RM 24 and to the dilution effects from groundwater inflow. The coefficient of variation for chlorophyll a averages about 25% throughout the basin, whereas that for dissolved oxygen is about 5%. The dissolved oxygen data exhibit little skew, but the chlorophyll a data show marked positive skewness.

Estimates of output variance by monte carlo simulation are not affected by model nonlinearities. Thus a comparison of monte carlo generated standard deviations with those produced by first order error analysis should provide information on the extent of any nonlinearities. As shown in Table C-4, these two estimates differ by less than 5% for DO and by about 20% for chlorophyll a. This comparison indicates weak nonlinearities associated with dissolved oxygen and more substantial ones with chlorophyll a, thus supporting the previous sensitivity coefficient observations in the first order error analysis. As shown in Table C-5, for the output variables of temperature, CBOD, and algal growth rate, the monte carlo estimate of standard deviation differs by less than 5% from the FOEA estimate. These

differences are within the 95% confidence interval for the monte carlo estimates, thus implying negligible nonlinear effects for the conditions of this simulation. The frequency distributions for dissolved oxygen generated by the monte carlo analysis are shown graphically in Figure C-3. These distributions are useful in providing a visual representation of the distribution of model output at different locations in the system. In the case of dissolved oxygen shown in Figure C-3, the distributions appear nearly symmetric and the dispersion in the upper reaches of the basin is substantially smaller than that in the middle and lower reaches. Similar plots (not shown) for chlorophyll a data in Table C-4 clearly show the decreasing dispersion and pronounced positive skew in the simulated data.

F. Number of Monte Carlo Simulations.

A number of experiments were performed with the Withlacoochee data set to determine the number of monte carlo simulations required to achieve a given precision in the computed standard deviation of each output state variable. Twenty replicate sets of 25, 50, 100, 200, and 500 monte carlo simulations were conducted. The approximte 95% confidence interval (based on the assumption of normality) was computed for each replicate set and then plotted versus the total number of simulations performed. The results for dissolved oxygen and CBOD are presented in Figure C-4. The smooth curve represents an envelope for the upper limit of the 95% CI for simulated standard deviation from repeated monte carlo simulations. For both DO and CBOD it can be seen that about 1000 simulations are required to estimate the output standard deviation to within 5% of the mean. With this criterion as a goal, 2000 monte carlo simulations were conservatively and routinely performed for the preceding analyses.

TABLE C-5 Differences in Standard Deviation Estimates for Output Variables - Withlacoochee River Survey - 1984

Output Variables	Between FOEA Input Perturbations from -20 to +20%	Between FOEA (5%) and Monte Carlo Simulations (2000)
Temperature	5.4	1.8 - 4.3
Dissolved Oxygen	7.7	0.6 - 4.5
CBOD	0.8	1.4 - 2.6
Nitrogen Forms	*	*
Phosphorus Forms	*	*
Chlorophyll a	29	16 - 21
Algal Growth Rate	6.9	2 - 4

*Expected values of standard deviations too small to compute meaningful relative differences, although values are certainly less than 10% and likely less than 5%.

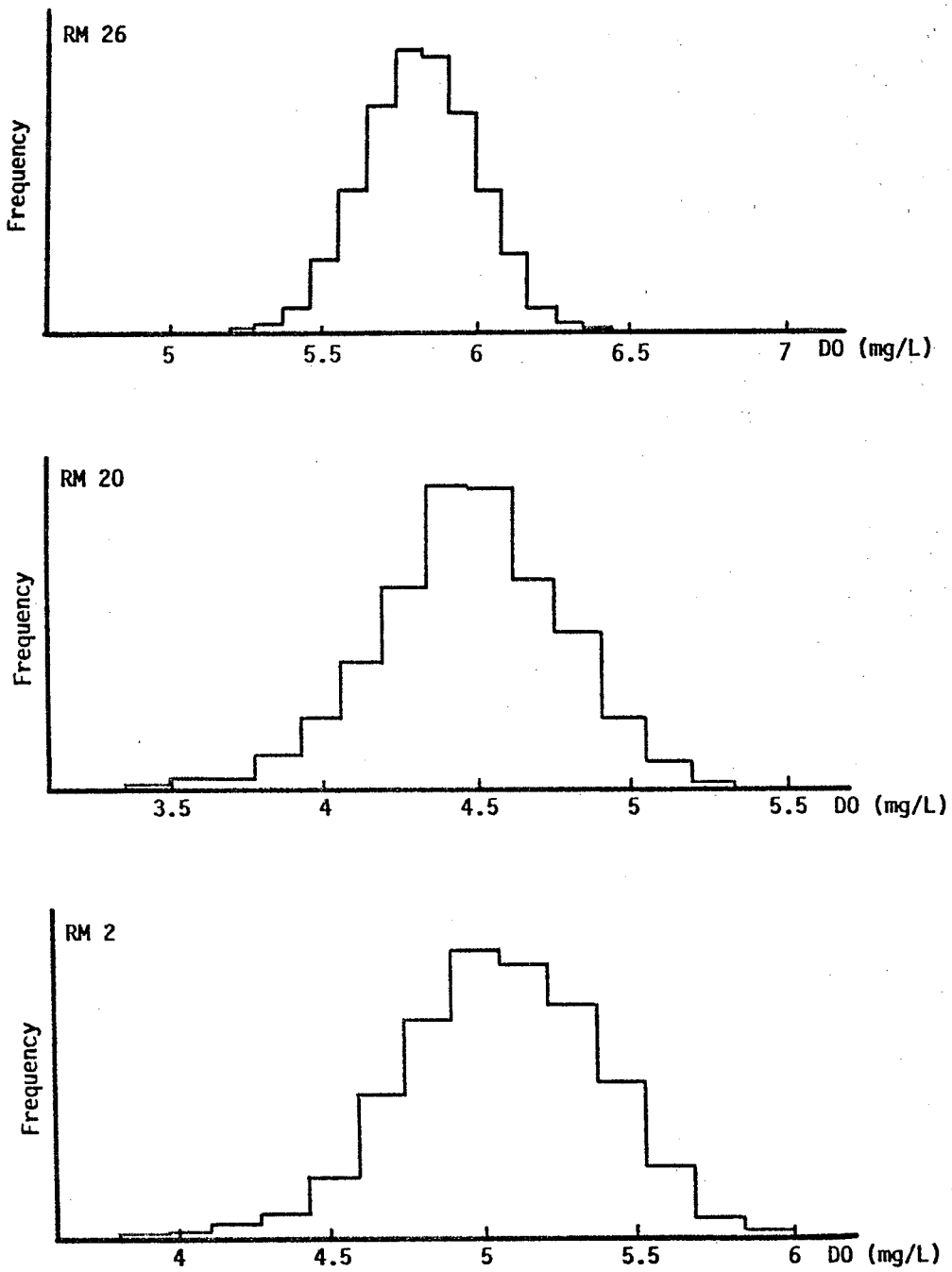

Fig. C-3. Frequency distribution for dissolved oxygen from monte carlo simulations (Withlacoochee River).

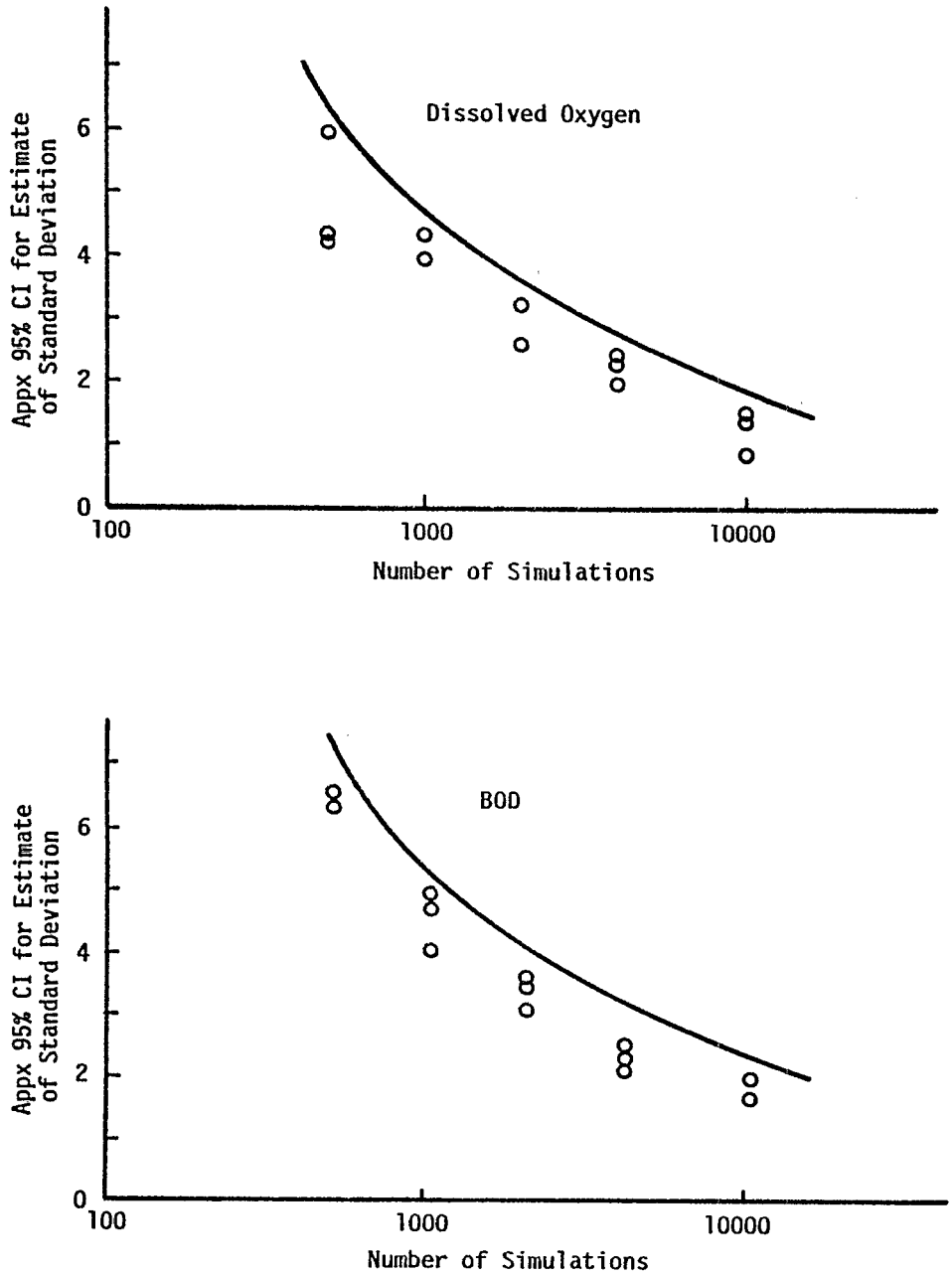

Fig. C-4. Convergence characteristics of monte carlo simulations with QUAL2E-UNCAS (Withlacoochee River).

G. Summary

The following observations summarize experience to date with uncertainty analysis using QUAL2E. QUAL2E-UNCAS has been shown to provide a useful framework for performing uncertainty analysis in steady state water quality modeling. Application of the first order error analysis and monte carlo simulation methodologies to a data set from the Withlacoochee River Basin has highlighted some of the useful features of uncertainty analysis. These include the changing sensitivities and components of variance in different portions of the river basin, the assessment of model nonlinearities, and the convergence characteristics of monte carlo methods. Better understanding of input variance and probability density functions, model nonlinearities and input parameter correlations are needed for more confident application of these techniques. An evaluation of the input factors which contribute the most to the level of uncertainty in an output variable will lead modelers in the direction of most efficient data gathering or research. In this manner the modeler can assess the risk of imprecise forecasts and recommend measures for reducing the magnitude of that imprecision.

H. Acknowledgements

The material presented in this Appendix is taken from a paper entitled "Uncertainty Analysis in Water Quality Modeling Using QUAL2E", written by the first author, for presentation at the WATERMATEX 87 Symposium, London, June 30-July 2, 1987. The author also wishes to acknowledge Barbara Notini, graduate student, for her work in compiling the input variance data base and in performing the many monte carlo simulations.

REFERENCES

American Public Health Association, Inc., Standard Methods for the Examination of Water and Wastewater, American Public Health Association, 1965 (12th edition), 1985 (16th edition).

Anderson, E.R., Energy Budget Studies in Water Loss Investigations--Lake Hefner Studies, Technical Report, U.S. Geological Survey, Washington, DC, Prof. Paper 269, 1954.

Arden, B.W. and K.N. Astill, Numerical Algorithms: Origins and Applications, Addison-Wesley, Reading, MA, 1970.

Bannister, T.T., "Production Equations in Terms of Chlorophyll Concentration, Quantun Yield, and Upper Limit to Production," Limnology and Oceanography, Vol. 19, No. 1, pp 1-12, January 1974.

Bowie, G.L., W.B. Mills, D.B. Porcella, C.L. Campbell, J.R. Pagenkopt, G.L. Rupp, K.M. Johnson, P.W.H. Chan, and S.A. Gherini, Rates, Constants, and Kinetics Formulations in Surface Water Quality Modeling, 2nd ed., EPA/600/3-85/040, U.S. Environmental Protection Agency, Athens, GA, 1985.

Box, G.E.P., W.G. Hunter, and J.S. Hunter, Statistics for Experimenters, Wiley, New York, NY, 1978.

Brandes, R.J. and A.B. Stein, WREDUN Model Documentation Report, Water Resources Engineers, Inc., prepared for Texas Department of Water Resources, Construction Grants and Water Quality Planning Division, no date.

Butts, T.A. and R.L. Evans, "Small Stream Channel Dam Aeration Characteristics", Journal, Environmental Engineering Division, ASCE, Vol. 109, No 3, pp. 555-573, June 1983.

Chen, C.W. and G.T. Orlob, Final Report, Ecologic Simulation of Aquatic Environments, Water Resources Engineers, Inc., prepared for the Office of Water Resources Research, U.S. Department of the Interior, Washington, DC, October 1972.

Churchill, M.A., H.L. Elmore and R.A. Buckingham, "The Prediction of Stream Reaeration Rates," International Journal of Air and Water Pollution, Vol. 6, pp 467-504, 1962.

Davies, O.L. (ed.), The Design and Analysis of Industrial Experiments, Hafner Publishing Company, New York, NY, 1967.

DeGroot, W.T., "Modelling the Multiple Nutrient Limitation of Algal Growth," Ecological Modelling, Vol. 18, pp 99-119, 1983.

Department of Scientific and Industrial Research (DSIR), Effects of Polluting Discharges on the Thames Estuary, Water Pollution Research Technical Paper No. 11, Her Majesty's Stationery Office, London, 1964.

Duke, J.H., Jr., A.E. Johnson, and H.O. Andrews, "Verification and Sensitivity of the Unsteady Flow and Water Quality Model, WRECEV", Contract No. 68-01-2620, U.S. Environmental Protection Agency, by Water Resources Engineers, Inc., Austin, TX, 1976.

Duke, James H., Jr., Provision of a Steady-State Version of the Stream Model, QUAL, Water Resources Engineers, Inc., Austin, TX, prepared for the U.S. Environmental Protection Agency, Washington, DC, November 1973.

Edinger, J.E. and J.C. Geyer, Heat Exchange in the Environment, Johns Hopkins Univ., Baltimore, MD, 1965.

Elder, J.W., "The Dispersion of a Marked Fluid in Turbulent Shear Flow," Jour. Fluid Mech., Vol. 5, Part 4, pp 544-560, May 1959.

Field, S.D. and S.W. Effler, "Photosynthesis-Light Mathematical Formulations," Journal of Environmental Engineering Division, ASCE, Vol. 108, No. EE1, pp 199-203, February 1982.

Field, S.D. and S.W. Effler, "Light-Productivity Model for Onondaga, N.Y.," Journal Environmental Engineering Division, ASCE, Vol. 109, No. EE4, pp 830-844, August 1983.

Fisher, H.B., Discussion to "Time of Travel of Soluble Contaminants in Streams," by T.J. Buchanan, Proc. Sanitary Eng. Div., ASCE, v. 6, 1964.

Fisher, H.B., E.J. List, R.C.Y. Koh, J. Imberger, N.H. Brooks, Mixing in Inland and Coastal Waters, Academic Press, New York, NY, 1979.

Frank D. Masch and Associates and the Texas Water Development Board, Simulation of Water Quality in Streams and Canals, Theory and Description of the QUAL-I Mathematical Modeling System, Report 128, the Texas Water Development Board, Austin, TX, May 1971.

Henderson, F.M., Open Channel Flow, Macmillan Co., New York, NY, 1966.

JRB Associates, "Users Manual for Vermont QUAL-II Model," prepared for U.S. Environmental Protection Agency, Washington, DC, June 1983.

Jassby, A.D., and T. Platt, "Mathematical Formulation of the Relationship Between Photosynthesis and Light for Phytoplankton," Limnology and Oceanography, Vol. 21, No. 4, July 1976, pp 540-547.

Kennedy, M.S. and J.M. Bell, "The Effects of Advanced Wastewater Treatment on River Water Quality", Journal Water Pollution Control Federation, Vol. 58, No. 12, pp 1138-1144, December, 1986.

Koenig, M., Withlacoochee River - QUAL2E model calibration from Clyatville, GA to Ellaville, FL (in preparation), U.S. Environmental Protection Agency, Region IV, Environmental Services Division, Athens, GA, 1986.

Kramer, R.H., A Search of the Literature for Data Pertaining to Bioenergetics and Population Dynamics of Freshwater Fishes, Desert Biome Aquatic Program, Utah State University, Logan, UT, August 1970.

Langbien, W.B. and W.H. Durum, The Aeration Capacity of Streams, U.S. Geological Survey, Washington, DC, Circ. 542, 1967.

Malone, R., D.S. Bowles, M.P. Windham, and W.J. Grenney, "Comparison of Techniques for Assessing Effects of Loading Uncertainty Upon a Long Term Phosphorus Model", Applied Mathematical Modeling, Vol. 7, No. 1, pp 11-18, Feb. 1983.

McCutcheon, S.C., Water quality and streamflow data for the West Fork Trinity River in Fort Worth, TX, U.S. Geological Survey, Water Resources Investigation Report 84-4330, NTSL, MS, 1985.

National Council for Air and Stream Improvement, Inc., A study of the selection, calibration, and verification of mathematical water quality models, NCASI Technical Bulletin No. 367, New York, NY, March 1982.

National Council for Air and Stream Improvement, Inc., A Review of the Mathematical Water Quality Model QUAL-II and Guidance for its Use, NCASI, New York, NY, Technical Bulletin No. 391, December 1982.

National Council for Air and Stream Improvement, Inc., QUAL2E User Manual, NCASI, New York, NY, Technical Bulletin No. 457, February 1985.

O'Connor, D.J. and W.E. Dobbins, "Mechanism of Reaeration in Natural Streams," Trans. ASCE, Vol. 123, pp 641-684, 1958.

O'Neill, R.V., and R.H. Gardner, "Sources of Uncertainty in Ecological Models", In B.P. Zeigler, M.S. Elzas, G.L. Klir, T.I. Oren, eds. Methodology in Systems Modelling and Simulation. North-Holland Publishing Co., New York, pp 447-463, 1979.

Owens, M., R.W. Edwards and J.W. Gibbs, "Some Reaeration Studies in Streams," International Journal of Air and Water Pollution, Vol. 8, No. 8/9, pp 469-486, September 1964.

Plate, E.J. (ed.), Engineering Meteorology, Studies in Wind Engineering and Industrial Aerodynamics, Vol. 1 Fundamentals of Meteorology and Their Application to Problems in Environmental and Civil Engineering, Elsevier Scientific Publishing Company, Amsterdam, 1982.

Platt, T., K.H. Mann, and R.E. Ulanowicz (eds.), Mathematical Models in Biological Oceanography, Unesco Press, Paris, 1981.

Reckhow, K.H., Quantitative Techniques for the Assessment of Lake Quality, U.S. Environmental Protection Agency, Washington, D.C., EPA-440/5-79-015, 1979.

Roesner, L.A., Temperature Modeling in Streams, Lecture notes, water quality workshop, Tennessee Valley Authority, Knoxville, TN, 1969.

Roesner, L.A., P.R. Giguere, and D.E. Evenson, Computer Program Documentation for Stream Quality Modeling (QUAL-II). U.S. Environmental Protection Agency, Athens, GA, EPA-600/9-81-014, February 1981a.

Roesner, L.A., P.R. Giguere, and D.E. Evenson, User's Manual for Stream Quality Model (QUAL-II). U.S. Environmental Protection Agency, Athens, GA, EPA-600/9-81-015, February 1981b.

Rose, K.A., and G.L. Swartzman, "A Review of Parameter Sensitivity Methods Applicable to Ecosystem Models", Report NRC FIN B7018, prepared for the U.S. Nuclear Regulatory Commission, Washington, D.C., May 1981.

Scavia, D. and R.A. Park, "Documentation of Selected Constructs and Parameter Values in the Aquatic Model CLEANER," Ecological Modeling, Vol. 2, pp 33-58, 1976.

Scavia, D., W.F. Powers, R.P. Canale, J.L. Moody, "Comparison of First-Order Error Analysis and Monte Carlo Simulation in Time-Dependent Lake Entrophication Models", Water Resources Research, Vol. 17, No. 4, pp 1051-1059, 1981.

Smith, E.L., "Photosynthesis in Relation to Light and Carbon Dioxide," Proceedings, National Academy of Sciences, Vol. 22, pp 504-510, 1936.

Smith, J.D., Solutions to Partial Differential Equations, Macmillan Co., New York, NY, 1966.

St. John, J.R., T.W. Gallagher, and P.R. Paquin, "The Sensitivity of the Dissolved Oxygen Balance to Predictive Reaeration Equations," in Gas Transfer at Water Surfaces, W. Brutsaert and G. Jirka, eds., D. Reidl Publishing Company, Dordrecht, Holland, 1984.

Steele, J.H., "Environmental Control of Photosynthesis in the Sea," Limnology and Oceanography, Vol. 7, pp 137-150, 1962.

Stefan, H.G., J.J. Cardoni, F.R. Schiebe, and C.M. Cooper, "Model of Light Penetration in a Turbid Lake," Water Resources Research, Vol. 19, No. 1, pp 109-120, February 1983.

Stone, H.L. and P.O.T. Brian, "Numerical Solution of Convective Transport Problems," Journal American Institute of Chemical Engineers, Vol. 9, No. 5, pp 681-688, 1963.

Streeter, H.W. and E.B. Phelps, Study of the Pollution and Natural Purification of the Ohio River, U.S. Public Health Service, Washington, DC, Bulletin No. 146 (reprinted 1958), 1925.

Swartzman, G.L. and R. Bentley, "A Review and Comparison of Phytoplankton Simulation Models," Journal of the International Society for Ecological Modelling, Vol. 1, Nos. 1-2, pp 30-81, 1979.

Taylor, G.I., "The Dispersion of Matter in Turbulent Flow Through a Pipe," Proceedings, Royal Society of London, Vol. 234A, No. 1199, pp 456-475, March 6, 1954.

Texas Water Development Board, Simulation of Water Quality in Streams and Canals, Program Documentation and User's Manual, Austin, TX, September 1970.

Texas Water Development Board, QUAL-TX Users Manual, Version 2.5, Water Quality Management Section, Austin, TX, November 1984.

TenEch Environmental Consultants, Inc. Waste Load Allocation Verification Study: Final Report. Prepared for Iowa Department of Environmental Quality, July 1978.

Thackston, E.L. and P.A. Krenkel, Reaeration Prediction in Natural Streams, Journal of the Sanitary Engineering Division, ASCE, Vol. 95, No. SA1, pp 65-94, February 1969.

Thomas, H.A., Jr., "Pollution Load Capacity of Streams." Water and Sewage Works, Vol. 95, No. 11, pp 409-413, November 1948.

Tsivoglou, E.C. and J.R. Wallace, Characterization of Stream Reaeration Capacity, Prepared for U.S. Environmental Protection Agency, Washington, DC, 1972.

Tsivoglou, E.C. and L.A. Neal, "Tracer Measurement of Reaeration: III. Predicting the Reaeration Capacity of Inland Streams," Jour. WPCF, Vol. 48, No. 12, pp 2669-2689, December 1976.

Walker, W.W., QUAL2 Enhancements and Calibration to the Lower Winooski. Prepared for the Vermont Agency of Environmental Conservation, Montpelier, VT, December 1981.

Walker, W.W., "A Sensitivity and Error Analysis Framework for Lake Entrophication Modeling", Water Resources Bulletin, Vol. 18, No. 1, pp 53-60, Feb. 1982.

Walker, W.W. Personal Communication, 1983.

Water Resources Engineers, Inc., Prediction of Thermal Energy Distribution in Streams and Reservoirs, Prepared for the California Dept. of Fish and Game, 1967.

Water Resources Engineers, Inc. Progress Report on Contract No. 68-01-0713, Upper Mississippi River Basin Model Project, Sponsored by the Environmental Protection Agency, submitted to Environmental Protection Agency, September 21, 1972.

Wunderlich, W.O., The Fully-Mixed Stream Temperature Regime, ASCE Specialty Conf., Utah State Univ., Logan, Utah, 1969.

★U.S. GOVERNMENT PRINTING OFFICE:1992 -648 -003/60036

United States
Environmental Protection
Agency

Center for Environmental Research
Information
Cincinnati OH 45268

Official Business
Penalty for Private Use, $300

Please make all necessary changes on the above label, detach or copy, and return to the address in the upper left-hand corner.

If you do not wish to receive these reports CHECK HERE ☐; detach, or copy this cover, and return to the address in the upper left-hand corner.

EPA/600/3-87/007