United States
Environmental Protection
Agency

Office of Air Quality
Planning and Standards
Research Triangle Park, NC 27711

Emission Standards
Division

EPA

National Air Pollution Control Techniques Advisory Committee

Minutes of Meeting
November 19-21, 1991

Volume 2 of 2

Printed on Recycled Paper

National Air Pollution Control Techniques Advisory Committee

Minutes of Meeting
November 19-21, 1991

U.S. Environmental Protection Agency

Office Of Air and Radiation

Office of Air Quality Planning and Standards

Emission Standards Division

Research Triangle Park, North Carolina 27711

Two Volume Set: Volume 1 (Section I - X)
Volume 2 (Section I, XI - XVIII, and Appendix)

TABLE OF CONTENTS

PAGE

I. INTRODUCTION AND OPENING REMARKS
Bruce C. Jordan, Committee Chairman 1
Director, Emission Standards Division (ESD)
Office of Air Quality Planning and Standards, EPA

II. GENERAL PROVISIONS

A. EPA Presentation
Michele Dubow, ESD 5

B. Industry Presentation

Chemical Manufacturers Association 19

Danny Anderson
Vice President of Environmental Affairs
First Chemical Corporation

a. Supplemental Comments 22

C. Discussion 28

III. HAZARDOUS ORGANIC NATIONAL EMISSION STANDARDS FOR HAZARDOUS AIR POLLUTANTS (NESHAP)

A. EPA Presentation
Daphne McMurrer, ESD 33

B. Industry Presentation

Chemical Manufacturers Association 43
Thomas Robinson
Manager of Regulatory Affairs
Vulcan Chemicals Corporation

C. Discussion 48

IV. COKE OVEN NESHAP

A. EPA Presentation
Amanda Agnew, ESD 53

B. Discussion 66

V. DRY CLEANING NESHAP

A. EPA Presentation
Linda Herring, ESD 67

PAGE

B. Industry Presentation

1. International Fabricare Institute . . . . . *
William Fisher, Vice President

C. Discussion 83

VI. CHROMIUM ELECTROPLATING NESHAP

A. EPA Presentation
Lalit Banker, ESD 87

B. Discussion 99

VII. SECTION 112g

A. EPA Presentation
Tim Smith, ESD 105

B. Industry Presentations

1. Motor Vehicle Manufacturers Association . . 119
Richard Paul
Manager, Environmental Health

2. American Petroleum Institute 125
F. Dan Gealy
Director, Public Relations
Atlantic Richfield Company

3. Pharmaceutical Manufacturers Association . 131
Richard Vetter
Associate Counsel
Burroughs Wellcome

4. Chemical Manufacturers Association 140
Joe Woolbert
Principal Chemical Engineer
Texas Eastman Chemical Company

C. Discussion 145

VIII. SOURCE CATEGORY SCHEDULE FOR STANDARDS

A. EPA Presentation
David Svendsgaard and Chuck French, ESD 155

* Did not provide a copy of presentation for inclusion in the minutes.

PAGE

B. Industry Presentation

1. Institute of Chemical Waste Management . . . 181
Jonathan Kaiser
Manager, Resource Recovery and Combustion Programs
National Solid Wastes Management Association

C. Discussion 190

D. Correspondence

1. Chemical Manufacturers Association 196

2. American Iron and Steel Institute 199
Bruce A. Steiner
Vice President, Environment and Energy

IX. INDUSTRIAL PROCESS COOLING TOWERS

A. EPA Presentation
Phil Mulrine, ESD 201

B. Industry Presentation

1. Superior Manufacturing Company 227
Chuck Sanderson, Engineer

C. Discussion 236

X. MEDICAL WASTE INCINERATORS

A. EPA Presentation
James Eddinger, ESD 241

B. Industry Presentations

1. Cremation Association of North America . . 279
a. Paul Rahill
b. Ed Laux
c. Harvey Lapin

2. Waste Combustion Equipment Institute . . . 332
Stephen Shuler
Chairman

3. American Hospital Association 340
Jim McLarney
Director, Division of Health Facilities Management and Compliance
and
Lawrence G. Doucet
Doucet and Mainka, P.C.

PAGE

4. B.G. Wickberg Company 378
Henry H. Hadley
President

5. Calvert Environmental, Inc 386
Ronald G. Patterson
President

6. Konheim and Ketcham, Inc. 397
Carolyn S. Konheim
President

C. Discussion 435

D. Correspondence

1. Wisconsin Department of Natural Resources . . 457
Donald F. Theiler
Director
Bureau of Air Management

2. Joy Energy Systems, Inc. 459
Steve Shuler
Manager
Sales and Marketing

XI. OVERVIEW OF CONTROL TECHNIQUES GUIDELINES PROGRAM

A. EPA Presentations

1. General Overview
Susan R. Wyatt, ESD 468

2. Transfer Efficiency and Regulatory Guidance for Spray Coating Operations
Dave Salman, ESD 477

B. Discussion 496

XII. PLASTIC PARTS COATING

A. EPA Presentation
Joanie McLean, Radian Corporation 500

B. Industry Presentations

1. National Paint and Coatings Association . . 521
Naomi Suss
PPG Industries, Inc.

PAGE

2. Motor Vehicle Manufacturers Association . . 539
Joe Lennon
Environmental Control Engineer
Ford Motor Company

3. Graco, Inc. 553
Steve Kish
Market Development Manager

4. Mobay Corporation 562
John L. Williams
Director, Technical Marketing

C. Discussion 569

D. Correspondence

1. Navistar International Transportation Corporation 577
Tim W. McDaniel
Environmental Manager

2. Electrostatic Consultants Company 579
Arvid C. Walberg

3. Vantage Products Corporation 608
Dale C. Jones
Finishing Department Manager

4. Motor Vehicle Manufacturers Association . . . 623
Eugene A. Praschan
Manager, Emissions and Control

XIII. OFFSET LITHOGRAPHY

A. EPA Presentation
Donna Jones, Radian Corporation 631

B. Industry Presentations

1. Rosos Research Laboratories 672
Agi Rosos
President

2. C.A. Enterprises, Ltd 676
Paul L. Martin
Vice President, Product Development

3. American Newspaper Publishers Association . . 680
Wilson Cunningham
Vice President, Technical Research

PAGE

4. National Association of Printing Ink Manufacturers 700
James E. Renson
Environmental Affairs Coordinator

5. Environmental Conservation Board 714
a. Gerald Bender
Vice President
Environment, Safety, and Materials Engineering
R.R. Donnelley and Sons, Company

b. William Schaeffer
Consultant, Graphic Arts Technical Foundation

c. William Schneidereith, Jr.
President
Schneidereith and Sons, Inc.

C. Discussion 810

D. Correspondence

1. National Association of Printing Ink Manufacturers 826
James H. Sutphin
Executive Director

XIV. OVERVIEW OF CONTROL TECHNIQUES GUIDELINES PROGRAM
(Repeat of presentations under Section XI.)

XV. WOOD FURNITURE COATING

A. EPA Presentation and Discussion
Mary Jo Caldwell, Midwest Research Institute . . 841

B. Industry Presentations and Discussions

1. Union Carbide 883
Thayer West
Marketing Manager, Unicarb System

2. Classic Systems, Inc. 890
David Brookman
Technical Representative, Finishing Division

3. Graco, Inc. 905
Steve Kish
Market Development Manager

PAGE

4. Mobay Corporation 912
John L. Williams
Director, Technical Marketing

5. American Furniture Manufacturers Association. 921
Business and Institutional Furniture
Manufacturers Association
Kitchen Cabinet Manufacturers Association
National Paint and Coatings Association

a. Robert G. McInnes
Principal Air Quality Engineer
ENSR Consulting and Engineering

b. Mark Berkman
Senior Consultant
National Economic Research Associates

C. Correspondence

1. Thomasville Furniture Industries, Inc. . . . 963
Sherry Stookey
Supervisor
Environmental Compliance

XVI. AUTOBODY REFINISHING

A. EPA Presentation and Discussion
Darcy Campbell, Radian Corporation 965

B. Industry Presentation and Discussions

1. National Paint and Coatings Association . . . 997
Karl Schultz, Chairman, Automotive Refinishing
Coalition

2. BASF Corporation 1012
Bob Inglis
Director, Product Planning

3. Safety-Kleen 1023
John P. Kusz
Manager, Product Development

4. National Auto Dealers Association 1028
Douglas I. Greenhaus
Senior Attorney, Regulatory Affairs

5. PPG Industries, Inc.. 1037
R.T. Hilovsky
Manager, Regulatory Affairs
Automotive, Aircraft, and Fleet Finishes

PAGE

6. The Sherwin-Williams Company 1045
Gregory Ocampo
Product Manager

C. Correspondence

1. Graco, Inc. 1055
Steve Kish
Market Development Manager

2. Herkules Equipment Corporation 1060
Richard A. Robb
President

3. DuPont-Automotive Products 1065
Karl R. Schultz
Environmental Consultant

4. National Paint and Coatings Association, . 1074
Automotive Refinish Coalition
Jim Sell
Senior Counsel

XVII. BATCH PROCESSES

A. EPA Presentation
Randy McDonald, ESD 1115

B. Industry Presentations

1. On-Demand Environmental Systems, Inc. . . . 1148
Richard E. Hamilton
Vice President

2. Chemical Manufacturers Association 1155
Terri Ranganath
E.I. duPont de Nemours and Company

C. Discussion 1159

XVIII. VOLATILE ORGANIC LIQUID STORAGE

A. EPA Presentation
Mark Morris, ESD 1161

B. Industry Presentations

1. Conservatek Industries, Inc. 1189
Rob Ferry
Vice President

PAGE

2. Chemical Manufacturers Association 1199
Terri Ranganath
E.I. duPont de Nemours and Company

C. Discussion 1205

D. Correspondence

1. Petrex, Inc. 1206
W. L. Wagner
President

2. Wisconsin Department of Natural Resources . 1212
Steven M. Jorgensen
Engineer, Bureau of Air Management

3. American Petroleum Institute 1222
James K. Walters
Director, Measurement Coordination

APPENDIX: RECORD OF ATTENDANCE 1239

I. INTRODUCTION AND COMMENTS

Mr. Bruce C. Jordan, Chairperson
National Air Pollution Control Techniques
Advisory Committee

The National Air Pollution Control Techniques Advisory Committee (NAPCTAC) of the U.S. Environmental Protectional Agency (EPA) held a meeting on November 19-21, 1991, at the Sheraton Inn University Center in Durham, North Carolina. Mr. Bruce Jordan called the meeting to order at 9:00 a.m. Committee members in attendance were:

Mr. Donald R. Arkell	Mr. William O'Sullivan
Dr. Patrick R. Atkins	Dr. John E. Pinkerton
Mr. William J. Dennison	Ms. Deborah A. Sheiman
Mr. Ralph E. Hise	Mr. Brian L. Taranto
Ms. Vivian M. McIntire	

Messrs. Paul H. Arbesman and Charles A. Collins were unable to attend the meeting.

The agenda for the meeting was published in the Federal Register on October 22, 1991.

Mr. Jordan opened the meeting by extending a welcome on behalf of EPA and then introduced his colleagues at the speakers table; the EPA and EPA contractor staffs on hand to answer technical, economic, and regulatory questions; and the EPA staff handling the administrative aspects of the meeting. He asked that everyone sign the official register to provide a record of their participation in the meeting (see Appendix). Mr. Jordan noted that minutes of the proceeding would be available as soon as possible after the date of the meeting.

Mr. Jordan briefly outlined the agenda and then introduced the first of several speakers representing EPA and various industries who addressed issues concerning air pollution to the Committee.

AGENDA

U. S. ENVIRONMENTAL PROTECTION AGENCY

NATIONAL AIR POLLUTION CONTROL TECHNIQUES ADVISORY COMMITTEE

Sheraton Inn University Center
Brightleaf Ballroom (Third Floor)
15-501 at Morreene Road
2800 Middleton Avenue
Durham, North Carolina 27705
(919) 383-8575

NOVEMBER 19, 20, AND 21, 1991

November 19 (Tuesday) - 9:00 a.m.

NATIONAL EMISSION STANDARDS FOR HAZARDOUS AIR POLLUTANTS (NESHAP) PROJECTS STATUS REPORTS
(Title III of the Clean Air Act Amendments)

General Provisions

Hazardous Organic NESHAP (HON)

Coke Ovens

Dry Cleaning

Chromium Electroplating

SECTION 112g
Status Report on the Development of Guidance for New, Modified, and Reconstructed Sources
(Title III of the Clean Air Act Amendments)

SOURCE CATEGORY SCHEDULE FOR STANDARDS
Status Report on the Development of a Prioritized Agenda for Source Category Emission Standards Promulgation
(Title III of the Clean Air Act Amendments)

A LUNCH BREAK WILL BE TAKEN FROM 1:00-2:00 P.M. EACH DAY

November 20 (Wednesday) - 9:00 a.m.

CONTINUATION OF NOVEMBER 19--AS REQUIRED

INDUSTRIAL PROCESS COOLING TOWERS
Status Report on the Development of the Proposed NESHAP
(Title III of the Clean Air Act Amendments)

MEDICAL WASTE INCINERATORS
Status Report on the Development of the Proposed Standards and Emission Guidelines
(Section 111 and Title III of the Clean Air Act Amendments)

CONTROL TECHNIQUES GUIDELINES (CTG) PROGRAM
(Title I of the Clean Air Act Amendments)

Overview of Program

Plastic Parts Coating CTG Document

Offset Lithography CTG Document

November 21 (Thursday) - 9:00 a.m.

CONTINUATION OF NOVEMBER 20--AS REQUIRED

CONTROL TECHNIQUES GUIDELINES (CTG) PROGRAM
(Title I of the Clean Air Act Amendments)

Overview of Program

Wood Furniture Coating CTG Document

Autobody Refinishing CTG Document

Batch Processes CTG Document

Volatile Organic Liquid Storage CTG Document

A LUNCH BREAK WILL BE TAKEN FROM 1:00-2:00 P.M. EACH DAY

U.S. ENVIRONMENTAL PROTECTION AGENCY

NATIONAL AIR POLLUTION CONTROL TECHNIQUES ADVISORY COMMITTEE

Chairperson and Designated Federal Official
Mr. Bruce C. Jordan
Director, Emission Standards Division (MD-13)
Office of Air Quality Planning and Standards
U. S. Environmental Protection Agency
Research Triangle Park, North Carolina 27711
(919) 541-5572
FTS: 629-5572

COMMITTEE MEMBERS

Mr. Paul H. Arbesman
Director, Pollution Control
Allied-Signal, Inc.
Columbia Road and Park Avenue
Morristown, New Jersey 07962
(201) 455-4286

Mr. Donald R. Arkell
Director
Lane Regional Air Pollution Authority
225 North 5th Street-Suite 501
Springfield, Oregon 97477
(503) 726-2514

Dr. Patrick R. Atkins
Director, Environmental Control
Aluminum Company of America
1501 Alcoa Building
Pittsburgh, Pennsylvania 15219
(412) 553-3805

Mr. Charles A. Collins
Administrator, Air Quality Division
Wyoming Department of Environmental Quality
122 West 25th Street
Cheyenne, Wyoming 82002
(307) 777-7391

Mr. William J. Dennison
Dennison and Associates
4 Cintilar
Irvine, California 92720
(714) 752-4150 or 51

Mr. Ralph E. Hise
President
Advanced Technologies Management, Inc.
2964 Falmouth Road
Cleveland, Ohio 44122
(216) 751-5135

Ms. Vivian M. McIntire
Environmental Affairs
Eastman Chemicals Company
Post Office Box 511
Kingsport, Tennessee 37662
(615) 229-3045

Mr. William O'Sullivan
Assistant Director
Air Quality Engineering and Technology
N.J. Department of Environmental Protection
401 East State Street, CN027
Trenton, New Jersey 08625
(609) 984-6721

Dr. John E. Pinkerton
Program Director, Air Quality
National Council of the Paper Industry for Air and Stream Improvement, Inc.
260 Madison Avenue
New York, New York 10016
(212) 532-9047

Ms. Deborah A. Sheiman
Resource Specialist
Natural Resources Defense Council
1350 New York Avenue, N.W. - Suite 300
Washington, D. C. 20005
(202) 783-7800

Mr. Brian L. Taranto
Senior Environmental Conservation Associate
Exxon Chemical Americas
13501 Katy Freeway
Houston, Texas 77079
(713) 870-6117

OVERVIEW OF CTG
PROGRAM

Presented by Susan Wyatt
Chemicals and Petroleum Branch
Emission Standards Division
Environmental Protection Agency

Susan Wyatt, Chief of the Chemicals and Petroleum Branch explained that all the remaining agenda items involved Control Techniques Guidelines (CTG's). Therefore, the purpose of her presentation was to provide an overview of the CTG program.

First, she explained that CTG's apply to volatile organic compound (VOC) emissions in nonattainment areas and provide guidance to States in writing VOC rules. Although CTG's contain recommended control levels, States can always adopt more stringent rules. They can also adopt less stringent rules on a case-by-case basis, provided there is adequate justification and the rules are approved by EPA. (Slide 2)

Ms. Wyatt then described the Clean Air Act requirements for CTG's, listed the CTG's EPA is working on, and described that there are various opportunities for public comment on CTG's. EPA is also developing rules and information documents on other VOC sources. These were listed. (Slides 3-6)

Ms. Wyatt then explained that some of the source categories covered by CTG's will also be covered by Title III hazardous air pollutant standards. She described why both are needed for full coverage, and emphasized that EPA is sensitive to the need to make the two programs complementary.(Slide 7) Then she listed the items to be covered for each CTG project at the NAPCTAC meeting.(Slide 8)

OVERVIEW OF VOC

CONTROL TECHNIQUES GUIDELINE (CTG)

PROGRAM

NAPCTAC

NOVEMBER 20-21, 1991

WHAT ARE CTG'S?

- FOR VOC; TITLE I OZONE NONATTAINMENT
- GUIDANCE FOR STATES
- RECOMMENDED RACT[1]
- CASE-BY-CASE RACT
- RACT RULES SUBMITTED TO EPA FOR APPROVAL AS PART OF STATE IMPLEMENTATION PLAN (SIP)

---

[1] RACT = REASONABLY AVAILABLE CONTROL TECHNOLOGY

WHAT DO THE CAAA REQUIRE FOR CTG'S?

- 13 CTG'S BY 11/93
- STATES MUST ADOPT REGULATIONS FOR CTG SOURCE CATEGORIES FOR ALL BUT "MARGINAL" NONATTAINMENT AREAS

PROJECTS & SCHEDULE

CTG / SOURCE		DRAFT	FINAL
1	SOCMI Distillation	12/91	12/92
2	SOCMI Reactors	"	"
3	Wood Furniture	4/92	6/93
4	Plastic Parts: Business Machines	"	"
5	Plastic Parts: Other	"	"
6	Offset Lithography	"	"
7	Industrial Wastewater	"	"
8	Autobody Refinishing	"	"
9	SOCMI Batch Processing	"	"
10	VOL Storage Tanks	"	"
11	Cleanup Solvents	9/92	11/93
12	Aerospace Coatings	TBD	"
13	Ship Building & Repair	"	"

TBD: Schedule to be determined, projects started in FY 92.

OPPORTUNITIES FOR PUBLIC COMMENT?

- NAPCTAC AND PUBLIC REVIEW OF PRELIMINARY DRAFT (NO RECOMMENDATION)
- FR NOTICE - DRAFT FOR PUBLIC COMMENTS
- FR NOTICE - FINAL CTG PUBLISHED
- PROPOSAL OF STATE REGULATIONS

OTHER VOC FEDERAL MEASURES

- MARINE VESSEL LOADING RULE
- CONSUMER/COMMERCIAL PRODUCTS REPORT AND NATIONAL RULES/CTG'S
- INFORMATION DOCUMENTS (ACT'S) FOR PESTICIDE APPLICATION AND BAKERIES
- STAGE II INFORMATION DOCUMENTS

RELATION OF CTG'S TO TITLE III RULES

- NEED FOR BOTH
- CONSIDERATION OF BOTH IN CTG/RULE DEVELOPMENT AND IMPLEMENTATION

WHAT WILL WE COVER TODAY?

- SIX CTG'S
- EMISSION SOURCES
- CONTROLS
- RACT OPTIONS (NO RACT RECOMMENDATIONS)
- EMISSION AND COST IMPACTS OF OPTIONS
  - MODEL (EXAMPLE) PLANTS
  - NATIONWIDE
- IMPLEMENTATION CONSIDERATIONS
- CONSIDERATION OF TRANSFER EFFICIENCY IN CTG'S INVOLVING COATINGS

TRANSFER EFFICIENCY AND REGULATORY GUIDANCE FOR SPRAY COATING OPERATIONS

PRESENTATION BY

David Salman
Chemical Application Section
Chemicals and Petroleum Branch

November 20, 1991

(SLIDE 1) - I will briefly discuss our thoughts on incorporating transfer efficiency in the regulatory guidance we will be providing for spray coating operations.

(SLIDE 2) - To preview our thinking, I have subtitled this presentation "Why we do not plan to recommend quantitative consideration of transfer efficiency in the spray coating CTGs that will be discussed at this meeting."

(SLIDE 3) - To explain the meaning and basis for this plan, in the rest of my talk I will:

Identify the spray coating industries and the types of spray equipment they use.

Discuss transfer efficiency, its definition, its importance and its complexities.

Explain how these complexities often make transfer efficiency difficult to measure because of its frequent variation, and difficult to incorporate quantitatively into regulatory guidance or regulations.

(SLIDE 4) - Our section has worked with coatings and coating industries for over fifteen years. We have worked in the past with at least 6 coating industries that predominantly spray coat, preparing control technique guidelines (CTGs) or new source performance standards (NSPSs). We have tried various ways to deal with transfer efficiency in these guidelines and regulations, with limited success and much difficulty. We have drawn upon this experience in attempting to deal with transfer efficiency in the three predominantly spray coating industries which will be discussed at this meeting; plastic parts, wood furniture and automobile refinishing.

Each of these industries coats a wide range of parts with many different coatings. Individual facilities in each of these

industries typically change the size and shape of parts being coated and/or coatings being sprayed many times each day.

(SLIDE 5) - There are many types of spray equipment available. This slide uses a Chinese restaurant menu approach to describe various types of spray equipment. The different types of spray equipment can be categorized by how they atomize the paint (air, airless, air-assisted-airless, high-volume low-pressure and rotary atomizers such as bells and discs), how the paint is attracted to the part (electrostatic and non-electrostatic), and how the equipment is operated (manual hand-held or automatic equipment ranging from simple reciprocators to complex robots).

Most combinations of atomization/attraction/operation are available. Most are used to some extent in every spray coating industry with the exception of automobile refinishing which uses fewer types of equipment. Each type of equipment may be used alone or in combination with other types of equipment in larger spray booths or in a series of spray booths.

(SLIDE 6) - In order to understand transfer efficiency, it is first necessary to understand a little about coatings. Liquid coatings can most simply be thought of as containing solvents (which are often VOCs) and solids (film forming materials). The solvents evaporate during application and cure of the coating. The remaining solids cover the part and dry or cure into the final film or coating.

When paint is sprayed, some of the solids sprayed adhere to the part and some miss or bounce off the part. The solids that are wasted because they do not adhere to the part are referred to as overspray. Transfer efficiency is a measure of this paint waste. Transfer efficiency is the ratio of the amount of solids deposited on the part(s) to the amount of solids used (sprayed). For a particular job, where the amount of solids deposited is constant (coating a given area to a given dry coating thickness), the amount of solids sprayed varies depending on the transfer efficiency. The lower the transfer efficiency, the more solids need to be sprayed and the greater the amount of waste. The better the transfer efficiency, the less solids need to be sprayed with a corresponding reduction in the amount of waste.

(SLIDE 7) - Why is transfer efficiency important? Transfer efficiency determines the amount of paint used to do a job and the cost of paint for that job. Transfer efficiency is directly related to 1) the quantity of VOC emissions generated and 2) the amount of solid waste resulting from overspray. Transfer efficiency also affects other operating costs such as filters, maintenance, booth clean-up, ventilation requirements and waste disposal.

(SLIDE 8) - This slide gives a graphical description of how, for a particular job, the volume of paint used, VOC emissions and solid waste generated varies with transfer efficiency.

At 100 percent transfer efficiency, this job could be done with 3 gallons of coating. The VOC emissions would equal the amount of VOC in the 3 gallons of coating and there would be no solid waste generated from overspray.

At 60 percent transfer efficiency, 5 gallons of the same coating would be needed to do the same job. The VOC emissions would equal the amount of VOC in the 5 gallons of coating. The amount of solid waste generated from overspray would equal the amount of solids in 2 gallons of coating.

At 30 percent transfer efficiency, 10 gallons of the same coating would be needed to do the same job. The VOC emissions would equal the amount of VOC in the 10 gallons of coating. The amount of solid waste generated from overspray would equal the amount of solids in 7 gallons of coating.

At 15 percent transfer efficiency, 20 gallons of the same coating would be needed to do the same job. The VOC emissions would equal the amount of VOC in the 20 gallons of coating. The amount of solid waste generated from overspray would equal the amount of solids in 17 gallons of coating.

As transfer efficiency goes down, the amount of coating used, the amount of VOC emitted and the amount of solid waste generated all increase.

(SLIDE 9) - What affects transfer efficiency? The short answer to this question is virtually everything. Transfer efficiency is affected by:

The skill, technique and fatigue level of the operator.

The size, shape and complexity of the part.

The paint being sprayed and its amenability to spraying.

The type, method of operation, maintenance history and wear level of the spray equipment.

Numerous operating parameters such as the spray booth ventilation rate, the gun to part distance and the spacing of parts on the conveyor.

All of these potential variables mean that you have to test to determine transfer efficiency. You cannot guess or presume that a particular type of spray gun will achieve a particular

transfer efficiency. The large number of variables which are unrelated to the spray gun itself precludes any direct correlation between transfer efficiency and the type of spray gun. A wide range of transfer efficiencies is found for each type gun, part and paint.

(SLIDE 10) - When can transfer efficiency vary? The short answer to this question is frequently.

At an individual facility, transfer efficiency can vary:

From part to part as the size, shape and complexity of the part changes.

From paint to paint as the amenability of the paint to spraying changes.

From person to person as the skill, technique and fatigue level of the operator changes, and as the level of maintenance and control over automatic equipment changes.

Transfer efficiency also varies from plant to plant. Two plants using the same spray guns and the same paint to coat the same parts can achieve very different transfer efficiencies.

This means that testing must be done frequently or continuously, especially if there are frequent changes in the size and shape of the parts being coated and the coatings being used. As noted earlier, these types of changes occur frequently in each of the 3 spray coating industries that will be discussed at this meeting.

(SLIDE 11) - Another important factor that needs to be accounted for if transfer efficiency is to be quantitatively considered in regulatory guidance is establishing a baseline transfer efficiency for a source category. A baseline transfer efficiency is most simply thought of as the transfer efficiency that can be reasonably expected when reasonably available (RACT) coatings are used.

It is difficult to establish meaningful baseline transfer efficiency values for an industry when many different size and shape parts are coated. An appropriate baseline for a hard-to-coat part may be too low for an easy-to-coat part. An appropriate baseline for an easy to coat part may be impossible to achieve on a hard to coat part.

Similarly it is difficult to establish meaningful baseline transfer efficiency values for an industry where many different types of coatings are used. Each type of coating may be

processed (sprayed) differently, so each type of coating could require a different baseline value.

As noted previously, each of the 3 predominantly spray coating industries we are discussing at this meeting coat many different size and shape parts and use many different coatings.

(SLIDE 12) - Because of the complexities which yield frequent variation in transfer efficiency, require frequent testing to determine transfer efficiency and make setting baseline transfer efficiency values difficult, we do not plan to recommend quantitative consideration of transfer efficiency in the CTGs for these 3 industries. This means we do not plan to recommend separate minimum transfer efficiency requirements such as 50 percent or 65 percent. This also means that we do not plan to recommend coating emission limits which directly incorporate transfer efficiency, for example limits expressed in units of pounds of VOC per gallon of coating solids deposited.

(SLIDE 13) - We are giving some consideration to equipment requirements; for example we could recommend that the use of air spray be restricted or prohibited. We believe this would be directionally correct, but it may be difficult to enforce and certainly it would be difficult to assess the amount of reduction that could be credited to a State's or local area's attainment plan.

(SLIDE 14) - Even if transfer efficiency is not part of our guidance, there are many market and economic incentives for coaters to improve transfer efficiency. There is the potential for cost savings resulting from reduced paint usage, reduced solid waste disposal and easier spray booth clean-up. There could also be lower permit fees since with better transfer efficiency the same work can be done at a lower level of emissions. Similarly, improving transfer efficiency can help to reduce the level of offsets needed for a new facility. Also with regard to permits, improving transfer efficiency can allow for more production under a fixed emission cap since more work can be done with the same amount of paint while maintaining the same level of emissions.

We expect to note in each CTG the various types of spray equipment that are available, their potential to reduce paint usage and other possible advantages of their use.

This concludes my presentation on transfer efficiency. I would be happy to answer any questions.

TRANSFER EFFICIENCY AND REGULATORY GUIDANCE FOR SPRAY COATING OPERATIONS

NAPCTAC

NOVEMBER 20-21, 1991

WHY WE DO NOT PLAN TO RECOMMEND QUANTITATIVE CONSIDERATION OF TRANSFER EFFICIENCY

- IDENTIFY SPRAY COATING
  - INDUSTRIES
  - EQUIPMENT
- DISCUSS TRANSFER EFFICIENCY (TE)
  - DEFINITION
  - IMPORTANCE
  - COMPLEXITIES

CURRENT CTG PROJECTS

- PLASTIC PARTS
- WOOD FURNITURE
- AUTO REFINISHING

TYPES OF SPRAY EQUIPMENT

AIR

AIRLESS

AIR ASSISTED AIRLESS

HIGH-VOLUME LOW-PRESSURE (HVLP)

ROTARY ATOMIZERS

ELECTROSTATIC	MANUAL
NON-ELECTROSTATIC	AUTOMATIC

TRANSFER EFFICIENCY (TE)

COATING =

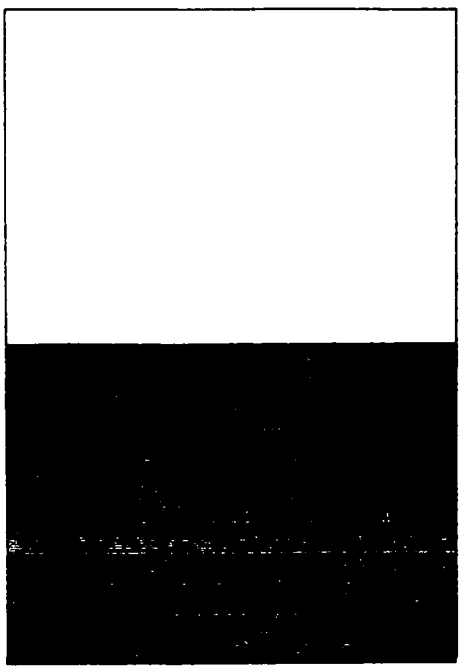

SOLVENT (VOC)

SOLIDS

$$TE = \frac{\text{SOLIDS DEPOSITED}}{\text{SOLIDS USED (SPRAYED)}}$$

WHY IS TE IMPORTANT?

- PAINT USE AND COST
- VOC
- SOLID WASTE
- OTHER OPERATING COSTS

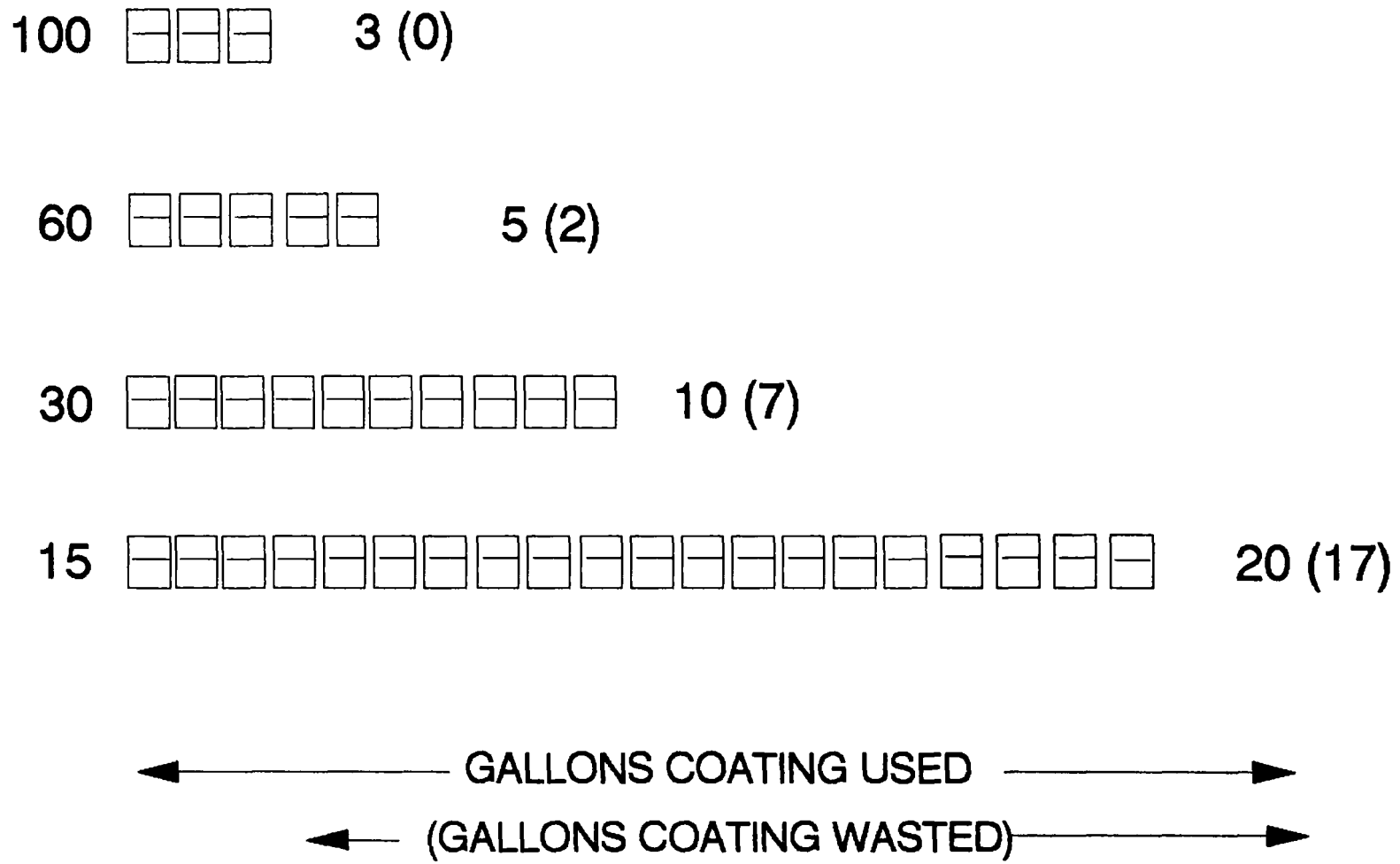
100
3 (0)
60
5 (2)
30
10 (7)
15
20 (17)
TE
GALLONS COATING USED
(GALLONS COATING WASTED)

WHAT AFFECTS TE?

- OPERATOR
- PART
- PAINT
- SPRAY EQUIPMENT
- NUMEROUS OPERATING PARAMETERS
  - SPRAY BOOTH VENTILATION
  - GUN TO PART DISTANCE
  - PART SPACING ON CONVEYOR

WHEN CAN TE VARY?

- PART TO PART
- PAINT TO PAINT
- PERSON TO PERSON
- PLANT TO PLANT

BASELINE TE

- DIFFICULT TO ESTABLISH MEANINGFUL BASELINE VALUES WHEN
  - MANY DIFFERENT SIZE/SHAPE PARTS ARE COATED
  - MANY DIFFERENT TYPES OF COATINGS ARE USED

DO NOT PLAN TO RECOMMEND

- SEPARATE MINIMUM TE REQUIREMENTS
- COATING EMISSION LIMITS WHICH DIRECTLY INCORPORATE TE

EQUIPMENT REQUIREMENTS ARE A POSSIBILITY

- EXAMPLE: PROHIBIT OR RESTRICT USE OF AIR SPRAY

MARKET AND ECONOMIC INCENTIVES TO IMPROVE TE

COST SAVINGS	- PAINT
	- SOLID WASTE DISPOSAL
	- SPRAY BOOTH CLEAN-UP
	- PERMIT FEES
PERMITS	- MAXIMIZE PRODUCTION UNDER EMISSION CAP
	- MINIMIZE LEVEL OF OFFSETS NEEDED

After Ms. Wyatt completed her presentation, NAPCTAC members were provided an opportunity to ask questions.

Mr. Ralph Hise asked why EPA is not developing a CTG for POTW's. Ms. Wyatt explained that control of emissions from POTW's are indirectly reduced through controls applied through the industrial wastewater CTG.

Mr. William J. Dennison asked how marketplace incentive programs interrelate with the CTG's. Mr. Bruce Jordan replied that States have flexibility as long as equivalency to RACT is attained.

Ms. Vivian McIntire expressed concern that sufficient time needs to be provided in the State Implementation Plan process so that people have an opportunity to apply for case-by-case RACT determinations.

DISCUSSION ON TRANSFER EFFICIENCY PRESENTATION

QUESTION (Ms. Sheiman) - Could you provide some perspective on how you have set standards in the past for similar industries? I recall that some state RACT regulations have the transfer efficiency concept in them and I presume that the idea for this came from EPA.

RESPONSE (Mr. Salman) - There is a long history to this going back to the CTGs we did in 1977 and 1978. Some states do have transfer efficiency considered in their regulations. For example, some regulations in California have a minimum transfer efficiency requirement of 65 percent which is deemed to be met if you use certain specified types of equipment. We are concerned about this because there is no guarantee that 65 percent is really achieved. This can lead to two sets of books with differences between actual and calculated emission rates.

Some states have become frustrated with dealing with transfer efficiency. New York, for example, took transfer efficiency out of its regulation a few years ago.

The one area in RACT regulations where there is widespread use of transfer efficiency is for certain operations at automobile assembly plants. We did a lot of work from 1985 to 1988 to establish a specific test procedure and methodology for determining when to retest. The paint shop in an automobile assembly plant is very complex, but they coat the same product every day for a long time. The industries we are dealing with at this meeting change parts and paints much more frequently.

QUESTION (Ms. Sheiman) - Without some kind of numerical standard for transfer efficiency how will we be sure to get some emission reduction?

RESPONSE (Mr. Berry) - We propose to write guidance that ignores transfer efficiency and to get emission reduction in other ways. We feel you cannot measure transfer efficiency. If a rule is written based on transfer efficiency, then the opportunity is created for people to mask real reductions.

QUESTION (from committee) - By regulating solvent content of coatings?

RESPONSE (Mr. Berry) - That's one way.

QUESTION (from committee) - There are other alternatives?

RESPONSE (Mr. Berry) - That is true.

QUESTION (Mr. O'Sullivan) - The chart shoes that transfer efficiency is important. If we ignore it then we may be ignoring something that is a very useful emission reduction technology. My question is if EPA does not set specific numerical transfer efficiency requirements, does EPA expect the states to set them or would equipment standards be acceptable?

RESPONSE (Mr. Berry) - We do not expect the states to do what we have not been able to figure out how to do?

QUESTION (Mr. O'Sullivan) - The states have to develop SIPs and they want emission reductions and credit for those emission reductions. Is there any mechanism by which states can take credit for transfer efficiency improvements in their annual emission reduction projections?

RESPONSE (Mr. Salman) - That is a good question and it has already been asked of us by California. They also wanted to know if there was some way to take credit for improvements in transfer efficiency in their plans on an area or industry basis when there was no specific numerical requirement in the regulation.

(Mr. Berry) - We are not sure how this will play out. It is like trying to measure the soul. It is hard to get your hands on this issue, we have tried for a long time .

QUESTION (audience) - Aren't there methods for measuring transfer efficiency. For example, measuring film build and surface area coated, or the weight gain of coated parts. These must give some approximation of transfer efficiency. Or maybe measuring the amount of paint waste. What methods have been used?

RESPONSE (Mr. Salman) - The first two methods you mentioned have been used to determine how much paint was put on the parts, film build and surface area, and weight gain of coated parts. Short term transfer efficiency tests have been done using one of these methods to determine how much paint was put on the part and measuring paint usage to determine the amount of solids sprayed. The problem is how much and how often to test when the parts coated and coatings used are constantly changing. You could wind up having to test all the time. The concept is simple in the short term. It may be disruptive or expensive to do a short term test, but it has been done. If the parts or coatings change all the time, then you have to test almost constantly and we have never seen this done.

QUESTION (Mr. Dennison) - You also have to factor in the constant turnover in who does the spraying. The person you see one time may not be there next time. This would affect transfer efficiency too.

RESPONSE (Mr. Berry) - True, and the presence of a transfer efficiency testing crew can affect the performance of the sprayers. Sprayers may react to having people with clipboards watching them do their job.

QUESTION (audience) - From a regulatory standpoint you should be able to do something with records. For example, looking at how much paint was used and what was coated in a month or a day.

RESPONSE (Mr. Berry) - We would do that if we thought it would work. The labor and the resources are not there to keep all the necessary records on area coated and film build. The records could be awesome. It could be done, but a lot of sophistication would be needed and it would be very difficult to do continuously.

U.S. ENVIRONMENTAL PROTECTION AGENCY PRESENTATION
ON SURFACE COATING OF PLASTIC PARTS CONTROL
TECHNIQUES GUIDELINE

Slide 1. This presentation covers the development of a CTG for surface coating of plastic parts. These are the topics covered in the presentation.

First, the industry, coating process, and emissions will be described, and then the approach to developing and analyzing control options will be described. This will include separate analysis for each of two different sectors of the plastic parts coating industry--the automotive and the business machine/miscellaneous sectors.

Implementation of the control options will be described, and last, I'll cover particular areas where EPA would like comment.

Slide 2. For the purpose of developing the CTG, the industry was initially divided into three segments, as shown here, automotive, business machines, and miscellaneous--(emissions estimates for the industry segments will be presented in a following slide).

The business machine and miscellaneous segments were eventually combined for analysis, because the substrates and coatings used are similar, and control options could be set for these parts as a single category.

The coating facilities covered by the CTG are either in-house processes at the "end product" manufacturing site, contractors specializing in molding and coating particular parts, or job-shops performing coating only.

Under the automotive sector, the CTG covers interior and exterior plastic components of automobiles, trucks, tractors, lawn mowers, and other mobilized equipment.

The Business Machine segment includes plastic housings for the products listed here--computers and other business machines, thinks like TV's and small appliances, and medical equipment.

Miscellaneous Plastic Parts is a broad category, covering a diverse array of products. The ones listed here are examples of some of the products that fall within this category. An area where EPA is particularly interested in comment concerns miscellaneous plastic parts. We would welcome information on particular products that may have unusual coating specifications, or may otherwise be considered outliers to the miscellaneous category. As I have explained, this category was combined with business machines for developing control options.

Slide 3. These are the general categories of coatings used to coat plastic parts: For automotive parts there are different coatings for interior parts versus exterior parts, and exterior parts are further divided into flexible and non-flexible parts, which also require different coatings.

Examples of specialty coatings are:

- adhesion promoters used on some substrates, or
- glare reducers used on interior parts such as dash boards.

Under Business Machines Coatings these again are general categories; EMI stands for electro magnetic interference; and RFI stands for radio frequency interference.

Shielding coatings act to prevent stray signals from affecting performance of machines.

Slide 4. This is a schematic drawing of a typical coating line, it shows a series of three spray booths with flash-off areas between. Flash-off areas are where initial drying and evaporation of volatiles occur.

There may be ovens between booths, or just at the end of the line; or there may be no oven where air-dry coatings are used in the case of temperature sensitive plastics.

Some lines are conveyorized. On some lines parts are hand carried from one area to the next.

VOC Emissions occur in all three areas -- booths, flash-off, and ovens. Spray booths are clearly where the majority of emissions occur--about 80 percent. Ten percent occurs in the flash-off areas, and the remaining 10 percent in the ovens. If no ovens are present, that 10 percent is emitted during flash-off.

Slide 5. Here we show estimated industry-wide emissions for the two industry segments. These estimates are based on facility counts found in supporting documents for State regulations and the Business Machine NSPS, combined with employment statistics for non-attainment areas.

The emission rates were developed using the model facilities that I'll describe in some following slides. We don't have emission estimates for the miscellaneous sector alone, but it accounts for about 5 percent of the industry, and it's assumed here that the 5500 tpy is representative of both miscellaneous and business machine coating emissions.

These numbers are estimates; there are no inventories available, but they reflect our best judgement as to the current industry emissions.

Slide 6. Demonstrated VOC controls for the industry are shown here: First, under Pollution Prevention technologies, are lower VOC content coatings. Lower VOC content can be achieved using either waterborne coatings, or higher solids content coatings.

Waterborne and higher solids coatings are both currently in use for a variety of applications. For business machine applications, waterborne coatings are less common than solvent

borne coatings; for automotive applications, waterborne coatings have been used more for interior parts than exterior. Again solvent borne coatings are still more commonly used.

Higher solids coatings are reportedly being used to a greater extent than waterborne for both automotive and business machine/miscellaneous applications.

Under Add-on Control Technologies, thermal incineration and carbon adsorption are included, controlling exhaust streams from spray booths and ovens.

Slide 7. I'll describe the control options and model plant analysis separately for two industry segments. First will be the automotive. These are the control options considered for the Automotive Sector. On the left side are the coating categories for which options were developed. There may be reasons to develop additional options for red and black coatings due to the particular needs of some red and black pigments. EPA is currently studying this subject.

Across the top of the table are the baseline and three control options, in lbs of VOC per gallon of coating, less water. Note that while 1 and 2 are coating reformulation options, control option 3 is use of add-on controls. We have listed here, for comparison, the equivalent VOC content that achieves the same emission reductions as incineration.

Options 1 and 2 represent the range of VOC contents reported by coaters and coating manufacturers. The baseline represents a level readily achievable by approximately 90 percent of the coatings reported by coaters and coating manufacturers.

Control Options 1 and 2 reflect levels that would achieve substantial emission reductions. Option 1 is demonstrated by several coatings per category; Option 2 is also demonstrated, but by fewer coatings and fewer coating manufacturers. Generally, the difference between Option 1 and Option 2 is the number of suppliers of coatings meeting the VOC level.

One note on the VOC levels under Option 2: for exterior flexible clearcoats, we have received some comments recently suggesting that the 3.5 lbs of VOC per gallon of coating is not readily available. We expect further input and some further investigation on these coatings.

Slide 8. This table shows the model plants developed for analysis of control options for the automotive segment. Four plant sizes were developed, with various combinations of process lines. We used three plants of each size, one each coating interior parts, exterior flexible parts, and exterior non-flexible parts, for a total of 12 model plants. The model plant parameters are based on responses to questionnaires and several site visits.

Slide 9. The results of the automotive model plant analysis are shown here.

For each control option, the range of emission reductions for all model plants, in TPY and percent, is shown, as are the ranges of annual control costs and the percent increase in annual

paint costs. Additional paint cost figures show the increase in cost over baseline.

I would point out that the broad range of percent emission reductions, in the second column, is due to differences in the coatings types used in each plant, rather than the plant size differences.

And the last column shows the cost effectiveness for each option. Again, these are ranges covering all four sizes of model plant. The cost effectiveness figures for Options 1 and 2 are roughly comparable. Note that, though there is substantial increase in emission reductions using Option 3, incineration, there is a disproportionately large increase in costs as well; this is, of course, reflected in the cost effectiveness figures.

It should be noted that these incineration costs are for facilities using conventional spray booths that have not been engineered to minimize costs of abatement. If for example, the waste stream is recirculated to increase the VOC concentration, the cost effectiveness figures would decrease.

Slide 10. Now, for the business machine/miscellaneous options and analysis: These are the VOC control options developed for the business machine/miscellaneous segment. These options reflect the same level of demonstration as the automotive options; and again, the column for Option 3 shows VOC levels that achieve emission reductions equivalent with incineration.

Slide 11. The model plants for the business machine/ miscellaneous segment include three sizes, again developed based on information collected from questionnaires and site visits. One model plant was developed for each size category, each model plant performing similar coating processes.

These three business machine/miscellaneous model plants, combined with the 12 automotive model plants gives us a total of 15 model plants.

Slide 12. The results of the business machine/miscellaneous model plant analysis are shown here. As for the automotive model plants, we show ranges of emission reductions, annual costs, and additional annual paint costs for each option. Again, the ranges cover the three different model plant size categories.

Cost effectiveness figures for Options 1 and 2 are roughly comparable; while the cost effectiveness of incineration is quite a bit higher. Again, these costs for incineration reflect use of conventional spray booths that have not been engineered to minimize costs of abatement.

Slide 13. The national impacts of the three options for both automotive and business machine/miscellaneous sectors have been estimated -- these impacts are shown here.

For the automotive sector, reductions range from 12,000 tpy under Option 1 to 35,000 tpy under Option 3 with associated costs ranging from $8 million/year for Option 1, to $770 million/year for Option 3.

For business machine/miscellaneous, emission reductions range from 2500 hundred tpy to 5000 tpy and costs range from $1 million/year to $106 million/year.

Slide 14. Compliance with the VOC control technologies would be demonstrated as shown here.

Coaters using lower VOC content coatings would maintain records of Method 24 tests for VOC content of all coatings used, and would also keep records of quantities of coatings used.

Using add-on controls, the coaters would report results of performance tests, and maintain records of control device monitoring.

Slide 15. These are a few issues that are currently undergoing investigation. EPA has solicited comment in the NAPCTAC mailout on these issues in particular.

- First of all, EPA is looking into the availability and costs of waterborne shielding coatings.
- Some initial comments on the control options for business machine color coats and color texture coats suggest that they may be too stringent; EPA is looking into these coatings further, as well.
- Air dry coatings are given less stringent VOC levels in some state regulations. As you have seen, our control options do not recognize air dry coatings as a separate category; so we are investigating temperature sensitivity of certain substrates.
- And last, the miscellaneous plastic parts category, as I have described, is very diverse. We have collected information on products falling into this category, and feel that the proposed options are appropriate for miscellaneous plastic parts; but we would like comments regarding this point.

CONTROL TECHNIQUES GUIDELINE

Control of Volatile Organic Compounds from Surface Coating of Plastic Parts

NAPCTAC Meeting Presentation

November 1991

OUTLINE OF PRESENTATION

- INDUSTRY AND PROCESS DESCRIPTION
- EMISSIONS
- CONTROL OPTIONS AND ANALYSIS
  - AUTOMOTIVE
  - BUSINESS MACHINES/MISCELLANEOUS
- IMPLEMENTATION
- AREAS FOR COMMENT

INDUSTRY DESCRIPTION

1. AUTOMOTIVE AND OTHER TRANSPORTATION PARTS

   - AUTOMOBILE PARTS (FASCIA, BUMPERS, DASHBOARDS)
   - TRACTORS, MOWERS
   - EXCLUDES MARINE COATING

2. BUSINESS MACHINES AND ELECTRONICS

   - COMPUTERS
   - COPY MACHINES
   - MISCELLANEOUS OFFICE EQUIPMENT
   - ENTERTAINMENT EQUIPMENT (RADIOS, RECORDERS, TELEVISIONS)
   - SMALL HOUSEWARE AND PERSONAL APPLIANCES
   - MEDICAL EQUIPMENT

3. MISCELLANEOUS PLASTIC PARTS

   - TOYS
   - WINDOW FRAMES
   - SPORTING GOODS

COATING TYPES

AUTOMOTIVE

- PRIMER
- TOPCOAT
  - BASECOAT/CLEARCOAT, OR
  - STAND-ALONE COLORCOAT
- CLEARCOAT
- SPECIALTY

BUSINESS MACHINE/MISCELLANEOUS

- PRIMER
- COLORCOAT
- COLOR/TEXTURE COAT
- EMI/RFI SHIELDING

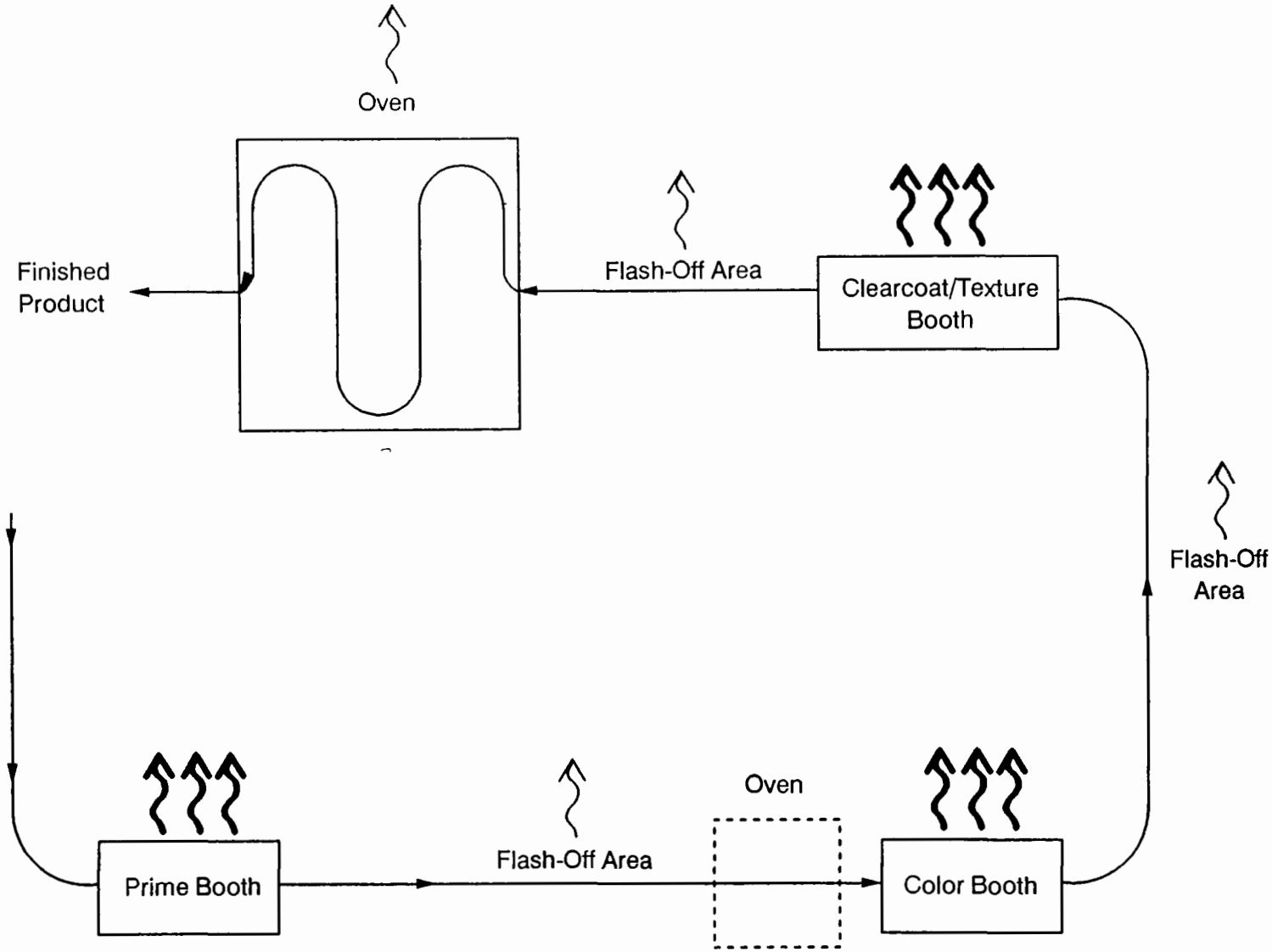

Typical Conveyorized Coating Line for Three-Coat Systems

INDUSTRY VOC EMISSIONS IN NONATTAINMENT AREAS

- AUTOMOTIVE - 38,000 TPY

  340 FACILITIES IN NONATTAINMENT AREAS

- BUSINESS MACHINES/MISCELLANEOUS - 5500 TPY

  250 FACILITIES IN NONATTAINMENT AREAS

VOC CONTROL TECHNOLOGIES

Pollution Prevention

- Lower VOC Content Coatings
  - Waterborne
  - Higher solids

Add-On Control

- Thermal Incineration (98% efficiency)
- Carbon Adsorption (95% efficiency)

VOC CONTROL OPTIONS FOR AUTOMOTIVE SECTOR
(LBS. VOC/GAL. COATING)

	Baseline	Option 1 Lower VOC	Option 2 Lower VOC	Option 3 Incineration
Automotive Interior				
• Colorcoat	6.3	5.0	3.2	0.6
• Primer	5.5	3.5	3.5	1.2
Automotive Exterior				
• Flexible				
- Colorcoat	4.6	4.3	4.1	0.7
- Clearcoat	4.3	3.8	3.5	0.5
- Primer	5.4	5.0	4.5	1.0
• Nonflexible				
- Colorcoat	4.6	4.3	4.1	0.7
- Clearcoat	4.3	3.8	3.5	0.5
- Primer	5.0	4.5	3.5	0.8

PARAMETERS FOR AUTOMOTIVE MODEL PLANTS

Model Plant Size	Capacity (gal. coating/year)	Spray Booths (Conveyor)	Spray Booths (No Conveyor)
1. Small	12,000	0	3
2. Medium	27,000	3	2
3. Large	98,000	6	3
4. Extra Large	300,000	16	4

AUTOMOTIVE MODEL PLANT ANALYSIS

Option	Emission Reduction Range (tons/yr)	Emission Reduction Range (%)	Annual Control Cost (1000$/yr)	% Increase in Annual Paint Cost*	Cost Effectiveness ($/ton reduction)
1	6 to 642	21 to 70	3.6 to 430	2.8 to 4.9	600 to 669
2	10 to 783	35 to 86	6 to 536	4.5 to 6.1	571 to 685
3 (Incineration)	22 to 897	78 to 98	503 to 18,800	68 to 82	7,000 to 28,000

*For Option 3, total annual costs for add-ons are considered the additional coating costs.

VOC CONTROL OPTIONS FOR BUSINESS MACHINES/MISCELLANEOUS SECTOR (LBS. VOC/GAL. COATING)

	Baseline	Option 1 Lower VOC	Option 2 Lower VOC	Option 3 Incineration
• Colorcoat	4.8	3.5	2.3	1.4
• Colorcoat/ Texture Coat	4.8	3.5	2.3	1.4
• Primer	4.5	2.9	1.2	1.2
• EMI/RFI Shielding	4.9	4.0	2.5	1.5

PARAMETERS FOR BUSINESS MACHINES/MISCELLANEOUS MODEL PLANTS

Model Plant Size	Capacity (gal. coating/year)	Spray Booths (Conveyor)	Spray Booths (No Conveyor)
1. Small	5,000	0	2
2. Medium	41,000	3	2
3. Large	103,000	6	3

BUSINESS MACHINES/MISCELLANEOUS MODEL PLANT ANALYSIS

Option	Emission Reduction Range (tons/yr)	Emission Reduction Range (%)	Annual Control Cost (1000$/yr)	% Increase in Annual Paint Cost*	Cost Effectiveness ($/ton reduction)
1	6 to 123	50	2.9 to 58	1.4	470
2	10 to 191	79	5 to 98	2.4	492 to 518
3	11 to 217	89	373 to 1,487	27 to 65	6,800 to 34,000

*For Option 3, total annual costs for add-ons are considered the additional coating cost.

NATIONAL IMPACTS

Control Option	National Emission Reduction (tons/yr)	National Costs (10^6 $/yr)	Cost Effectiveness $/ton
Automotive			
1	12,000	8	660
2	18,500	12	650
3	35,000	770	2200
Business Machines/Miscellaneous			
1	2,500	1	400
2	4,000	2	500
3	5,000	106	2100
Total			
1	14,500	9	620
2	22,500	14	620
3	40,000	876	2200

IMPLEMENTATION

Compliance/Recordkeeping

Control Technology	Compliance
• Lower VOC Coatings	• RM24 Tests for VOC Content • Records of Quantity Used
• Add-On Controls	• Performance Tests • Control Device Monitoring

AREAS FOR COMMENT

- Cost and Availability of Waterborne Shielding Coatings for Business Machines

- Business Machine Colorcoat and Color/Texture Coat Control Options

- Air Dry Coatings for Temperature-Sensitive Automotive Plastics

- Miscellaneous Plastic Parts Category

NAOMI SUSS, PPG INDUSTRIES, REPRESENTING THE NATIONAL PAINT AND COATINGS ASSOCIATION

Summary of Naomi Suss' Presentation

The NPCA presentation began with the qualification that it would only address the Automotive/Transportation portion of the CTG. It continued with a discussion of the driving forces that have led to the increasing use of plastic parts in the automotive industry. The primary reasons for their use were noted to have been reducing vehicle weight to improve fuel economy, the United States' concern over potential loss of chrome-producing materials imported from South Africa and the Soviet Union, and the ease with which frequent design changes could be accommodated by using plastic rather than metal in fabricating panels and other parts.

The NPCA then provided a discussion of figures for high bake and low bake coatings sold in North America in 1990. The total reported volume was 6,475,500 gallons. It was explained that high bake and low bake coatings are distinguished according to whether they cure at temperatures above 194°F (high bake) or at or below the temperature of 194°F (low bake); the distinction of high bake and low bake coatings is required due to the temperature sensitivity of certain plastic substrates. The coatings represented in the 1990 sales data were further categorized according to their functions (primer, clear coat, touch-up, etc.).

The first two concerns expressed by the NPCA were that the CTG did not distinguish between high and low bake coatings, and that specific coating-types that accounted for 41 percent of the 1990 volume were not separately recognized in the study. The lack of consideration for additional breakdowns of coating-types was noted to be inconsistent with Michigan's State Rule No. 632 which NPCA considers to be a well-developed regulation.

As the presentation proceeded, the specific needs of red and black coatings were mentioned. First, the NPCA said that color-matching between plastic and metal parts is important. And second, the NPCA gave technical reasons for the allowance of higher VOC contents in red and black coatings. With the smaller particle size of red and black pigments (solids) and the need for thicker film on some black or red parts, higher molecular weight resins are required for adequate dispersion and the prevention of re-agglomeration of pigment. The viscosity of red and black coatings is therefore higher, and more solvent is required for their use. The NPCA stated that this situation is a critical impasse for VOC reduction and needs to be recognized. The NPCA

also acknowledged that Michigan allows a scaling factor of 1.15 to be used for determining the allowable VOC contents for red and black coatings, as compared to other colors. Also noted was the problem of opacity which occurs when black primer tends to produce a graying effect on the color of the topcoat.

The next point of discussion was the use of Method 24 testing. The NPCA advocated the use of provisions, as in Michigan's rule, which differentiate between theoretical VOC content and the VOC content determined by Method 24. When Method 24 is used to determine the VOC content of high bake coatings, the VOC limit is increased by 0.5 lbs per gallon; for low bake coatings, the VOC limit is increased by 0.1 lbs per gallon.

The importance of plastic part function and density were presented. It was noted that some parts cannot be subjected to oven temperatures for curing the coatings without losing their structural integrity. Higher VOC content coatings must be used for these parts so that adequate cross-linking of the coating may be obtained without the use of heat in the curing process. The national usage of such coatings (e.g., air dry primer, 6.1 lbs/gal) was said to be small.

The NPCA noted that touch-up and repair coatings, used in small quantities when coated parts are damaged during production, currently meet or exceed their applicable specifications in the Michigan regulation.

In an overview of Table 66, from Michigan's State rule, the NPCA made the following statements. The regulation is technology forcing, and coatings meeting all of the levels are not yet in existence. Also, the conditions in the footnotes on the table still apply to red and black coatings and Method 24 test data.

The next portion of NPCA's presentation included projected sales figures for coatings of various VOC contents for 1992 and 1995, with the sales volume held constant at the 1988 level. Also presented were estimated levels of VOC emissions from automotive coating applications in 1988, 1992, and 1995. By instituting Michigan Rule No. 632 on a national basis, NPCA predicted a 15 percent emission reduction by 1992 and a 25 percent reduction by 1995 could be achieved. Because NPCA felt this study was based on conservative data and assumptions, even greater reductions could be anticipated.

Turning the focus of the presentation specifically to the CTG, the NPCA stated the following concerns. Not enough categories of coating-types were present. Categories should be made for monocoats as well as for coated parts which have specifically mandated safety and functional requirements like headlights, air bag covers, etc. Allowances for low-use, specialty coatings, such as for polycarbonates for headlight

lenses, vacuum-metalizing, stenciling, appliques, and adhesion promoters, should be made. The NPCA noted an expected increased usage of adhesion promoters, the highest volume specialty coatings, which are used for thermoplastic olefin (TPO) (polypropylene) bumpers. Also, data on this trend may be made available. The NPCA stated that, due to the low usage of these specialty coatings, the cost of reformulation would be a major concern; thus, it was suggested that these coatings be allowed less stringent VOC content levels. The origin of the baseline VOC content values in Table 5.1 was not evident. Those baseline values were not reflected in the model plants. Option 2 VOC contents are not now available; a more realistic year for their availability may be 1995. The evaluation of surface coatings as systems is complex and was overlooked. No flexible clearcoats that meet the level of 3.5 pounds of VOC per gallon of coating are available.

The NPCA expressed displeasure with generally all of the levels; using Table 65 of Michigan's rule for Option 1 and Michigan's 1992 values for Option 2 was recommended. However, it was suggested that red and black coatings be treated separately rather than providing a scaling factor for them. Also, monocoats were suggested to be evaluated separately.

Finally, the NPCA agreed with the presentation on transfer efficiency, given earlier by Dave Salman of EPA. The NPCA said that although TE is difficult to quantify, coaters will not be able to afford using less efficient equipment due to the costs associated with wasting paint. Because better equipment would conserve paint, NPCA would expect lower VOC emissions. After these remarks, the NPCA concluded its presentation and took questions from the NAPCTAC committee.

SURFACE COATING OF PLASTIC PARTS
CONTROL TECHNIQUES GUIDELINE

National Paint & Coatings Association

COMMENTS

NOVEMBER 20,1991

Automotive Plastic Parts Coatings

Total Volume - 6,475,500 Gallons

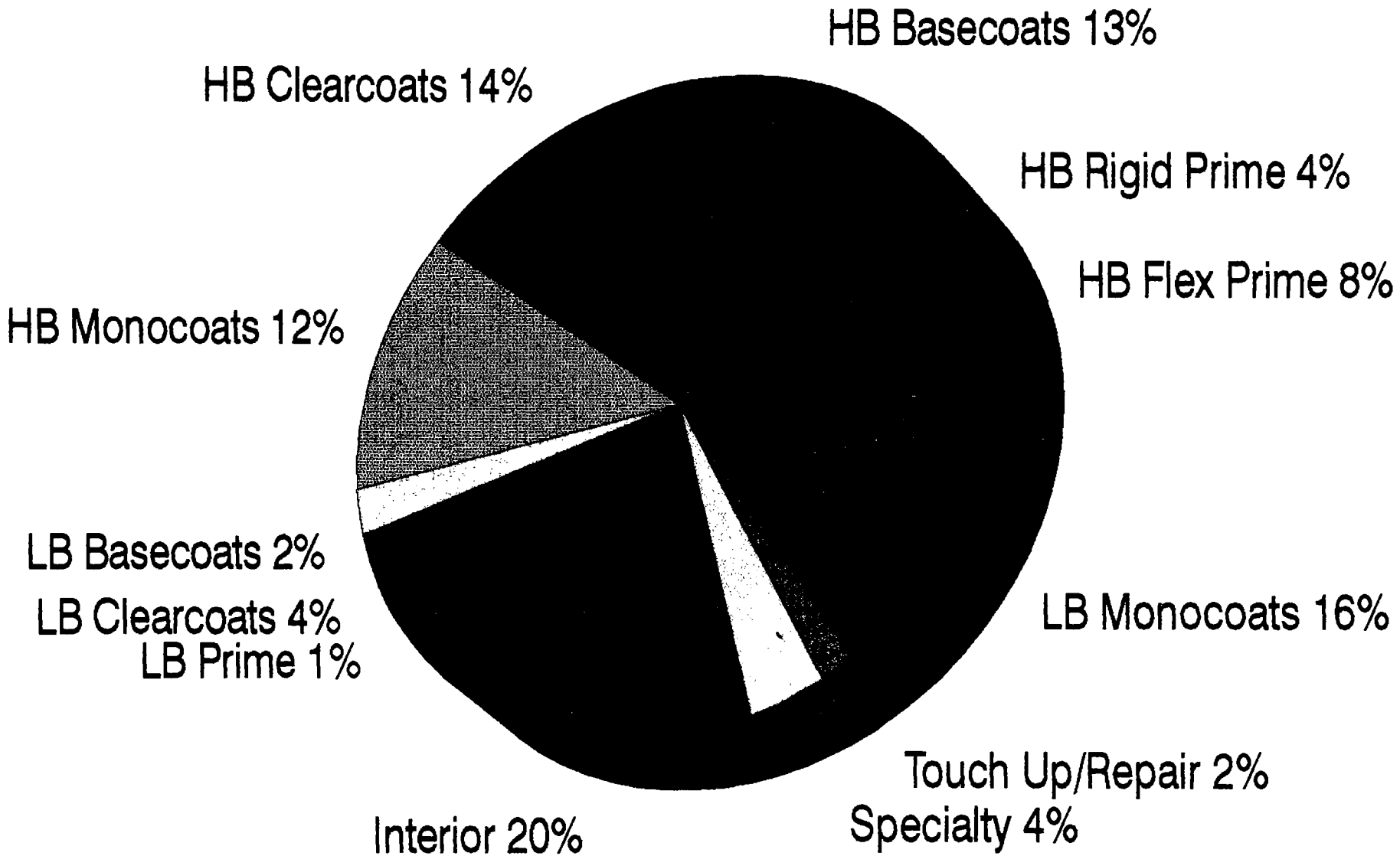

Michigan's Rule 632 Categorization

HB - High Bake
LB - Low Bake

Automotive Plastic Parts Coatings

Total Volume - 6,475,500 Gallons

Category	Value	%
Interior	1309.3	20
Low Bake Prime	45.8	1
High Bake Flex Prime	544.3	8
High Bake Rigid Prime	255.7	4
High Bake Basecoats	816.4	13
High Bake Clearcoats	918.8	14
High Bake Monocoats	812.6	13
Low Bake Basecoats	152.1	2
Low Bake Clearcoats	261.9	4
Low Bake Monocoats	1023.1	16
Touch Up & Repair	105.0	2
Specialty Coatings	230.5	4

In 1000 gallon increments.

Automotive Plastic Parts Coatings

Coatings not Recognized in CTG Draft

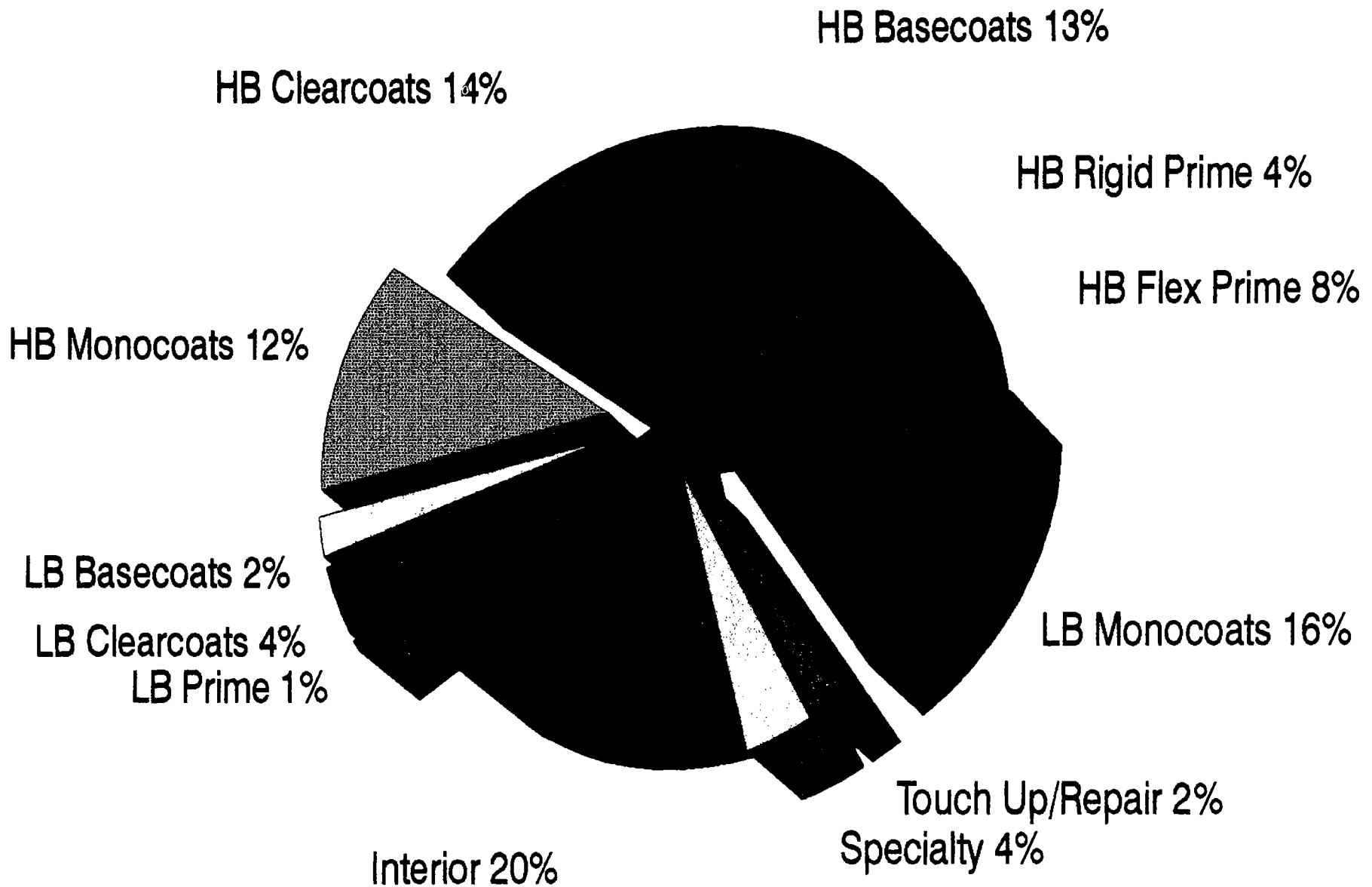

Michigan's Rule 632 Categorization
HB - High Bake
LB - Low Bake

Categories not Recognized in CTG Draft

Category	Volume	% Total Volume
High Bake Monocoats	812.6	12.6
Low Bake Basecoats	152.1	2.0
Low Bake Prime	45.8	0.7
Low Bake ClearcoatS	261.9	4.0
Low Bake Monocoats	1023.1	15.7
Touch Up & Repair	105.0	2.0
Specialty Coats	230.5	4.0
Total Value	2631.0*	41.0

Data From Chart 2 with Data for Above Categories Take Out.

*In 1000 gallon increments.

Red & Black Coatings

As a Percentage of Total Color Coats

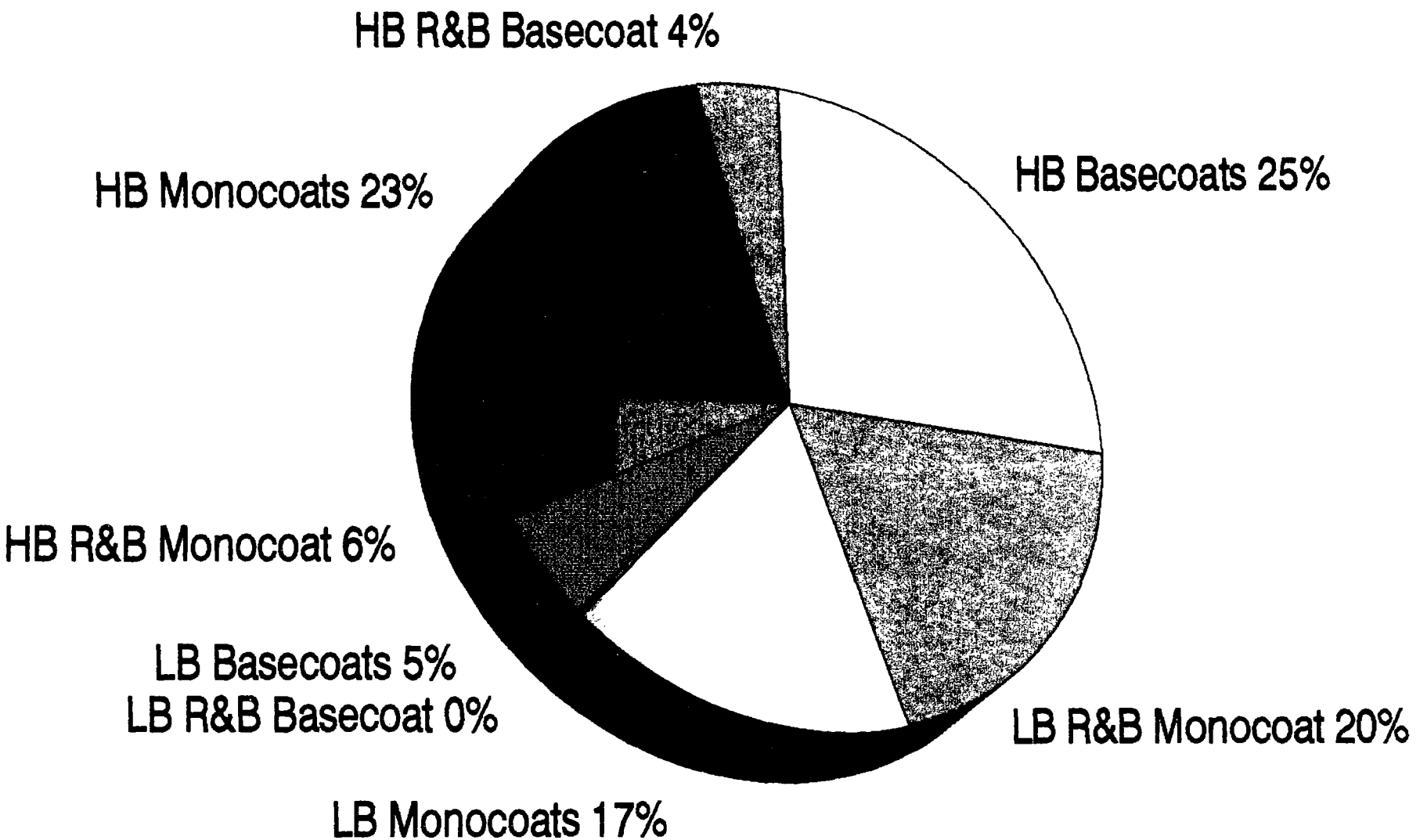

Total Color Coat Volume - 2,804,200 Gallons
Total Red & Black Volume - 856,100 Gallons

Red & Black Coatings

As a Percentage of Total Color Coats

Category	Volume	%
High Bake Basecoats	696.7	25
High Bake Red & Black Basecoats	119.7	4
High Bake Monocoats	634.7	23
High Bake Red & Black Monocoats	117.9	6
Low Bake Basecoats	142.8	5
Low Bake Red & Black Basecoats	9.3	0
Low Bake Monocoats	473.9	17
Low Bake Red & Black Monocoats	549.2	20

Table 65

Volatile organic compound emission limitations for existing automobile and truck plastic parts coating lines after 12/31/89

Operation	Pounds of volatile organic compounds allowed to be emitted per gallon of coating (minus water) as applied
1. High bake coating-exterior and interior parts (1)(2)	
(a) Prime	
(i) Flexible coating	5.0
(ii) Nonflexible coating	4.0
(b) Topcoat	
(i) Basecoat	4.6
(ii) Clearcoat	4.3
(iii) Non-basecoat/clearcoat	4.7
2. Air-dried coating--exterior parts (3)	
(a) Prime (1)	6.1
(b) Topcoat	
(i) Basecoat	5.8
(ii) Clearcoat	5.4
(iii) Non-basecoat/clearcoat	6.3
3. Air-dried coating--interior parts (3)	6.3
4. Touch-up and repair (3)	6.3

FOOTNOTES:

(1) For red and black coatings, the emission limitation shall be determined by multiplying the appropriate limit in this table by 1.15.

(2) When method 24 is used to determine the volatile organic compound content of a coating, the applicable emission limitation shall be determined by adding 0.5 to the appropriate limit in this table.

(3) When method 24 is used to determine the volatile organic compound content of a coating, the applicable emission limitation shall be determined by adding 0.1 to the appropriate limit in this table.

(18) Table 66 reads as follows:

Table 66

Volatile Organic Compound Emission Limitations for Existing Automobile and Truck Plastic Parts Coating Lines After 12/31/92

Operation	Pounds of Volatile Organic Compound Allowed to be Emitted per Gallon of Coating (minus water) as Applied
1. High Bake Coating - Exterior and Interior Parts	
a. Prime	
(i) Flexible Coating	4.5
(ii) Non-Flexible Coating	3.5
b. Topcoat	
(i) Basecoat	4.3
(ii) Clearcoat	4.0
(iii) Non-Basecoat/Clearcoat	4.3
2. Air-Dried Coating--Exterior Parts[1][3]	
a. Prime	4.8
b. Topcoat	
(i) Basecoat	5.0
(ii) Clearcoat	4.5
(iii) Non-Basecoat/Clearcoat	5.0
3. Air-Dried Coating--Interior Parts[1][3]	5.0
4. Touch Up and Repair[3]	5.2

(1) For red and black coatings, the emission limitation shall be determined by multiplying the appropriate limit in this table by 1.15.

(2) When method 24 is used to determine the volatile organic compound content of a coating, the applicable emission shall be determined by adding 0.5 · the appropriate limit in this table.

(3) When method 24 is used to determine the volatile organic compound content of a coating, the applicable emission limitation shall be determined by adding 0.1 to the appropriate limit in this table.

COATINGS FOR AUTOMOTIVE PLASTIC PARTS

Sales

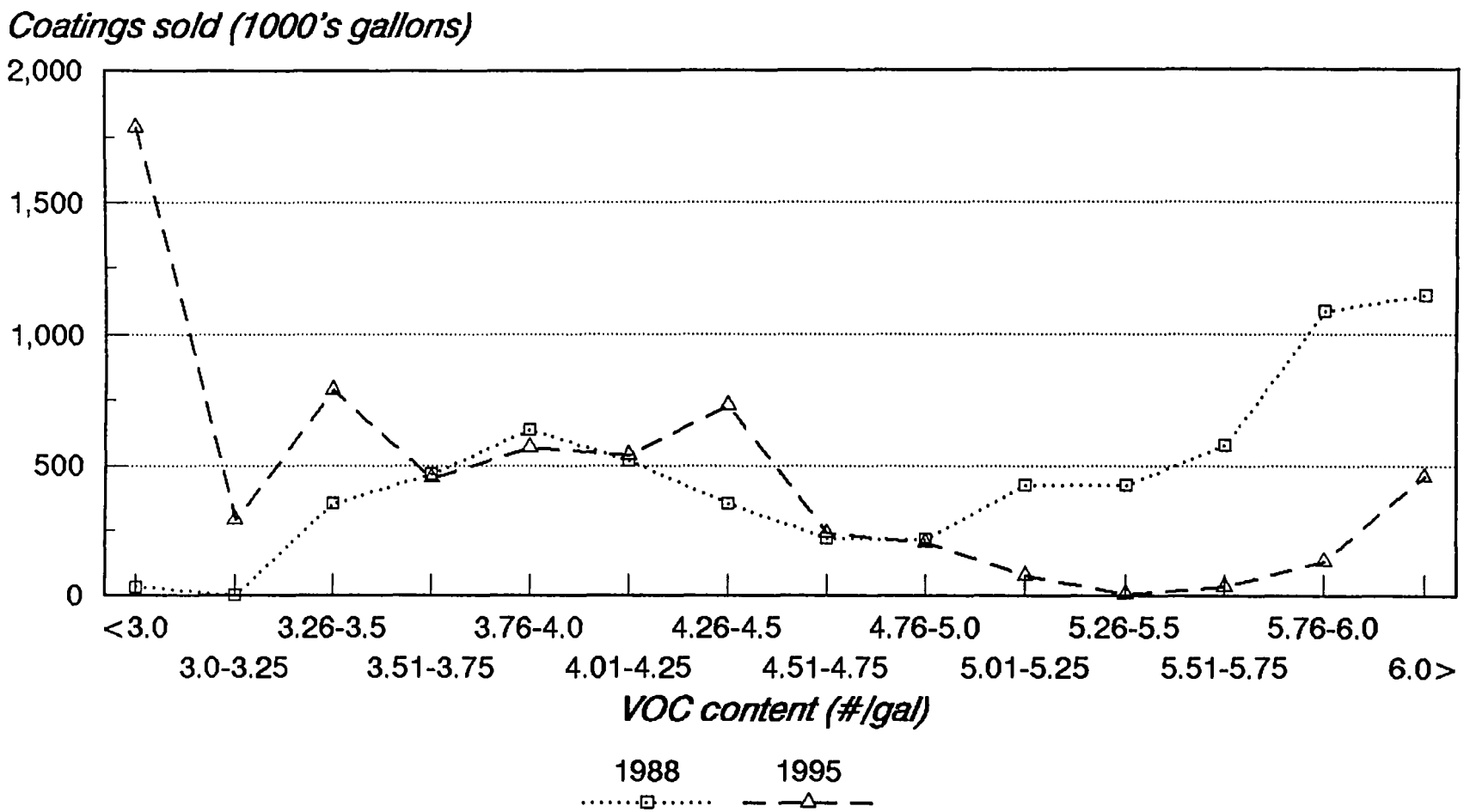

VOC content projections based on constant 1988 sales volume

COATINGS FOR AUTOMOTIVE PLASTIC PARTS

Emission of VOC in 1988, 92 & 95

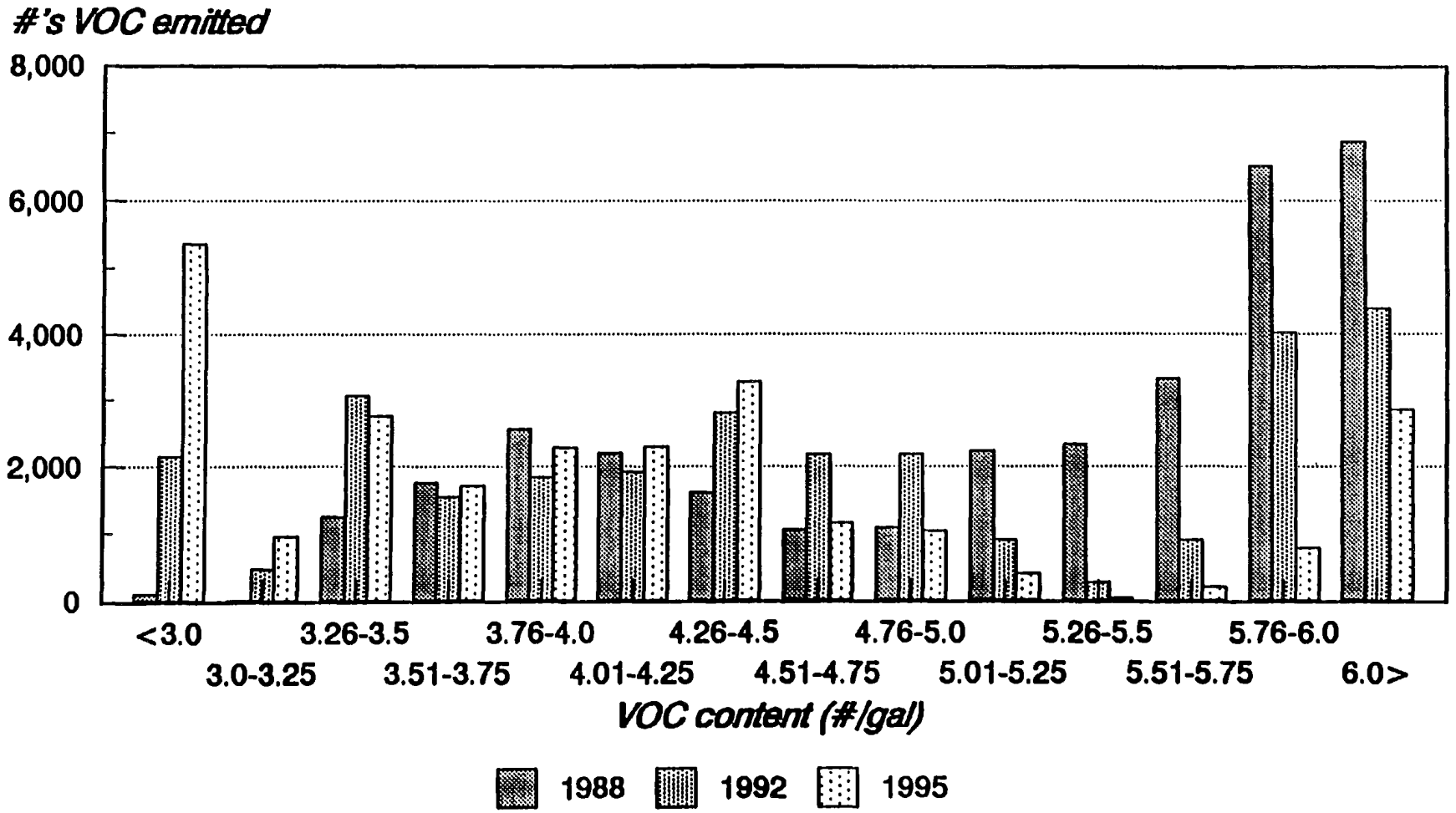

Calculations used high end of VOC for each VOC category

GRAPH III

COATINGS FOR AUTOMOTIVE PLASTIC PARTS

Total Emissions of VOC in 1988, 92 & 95

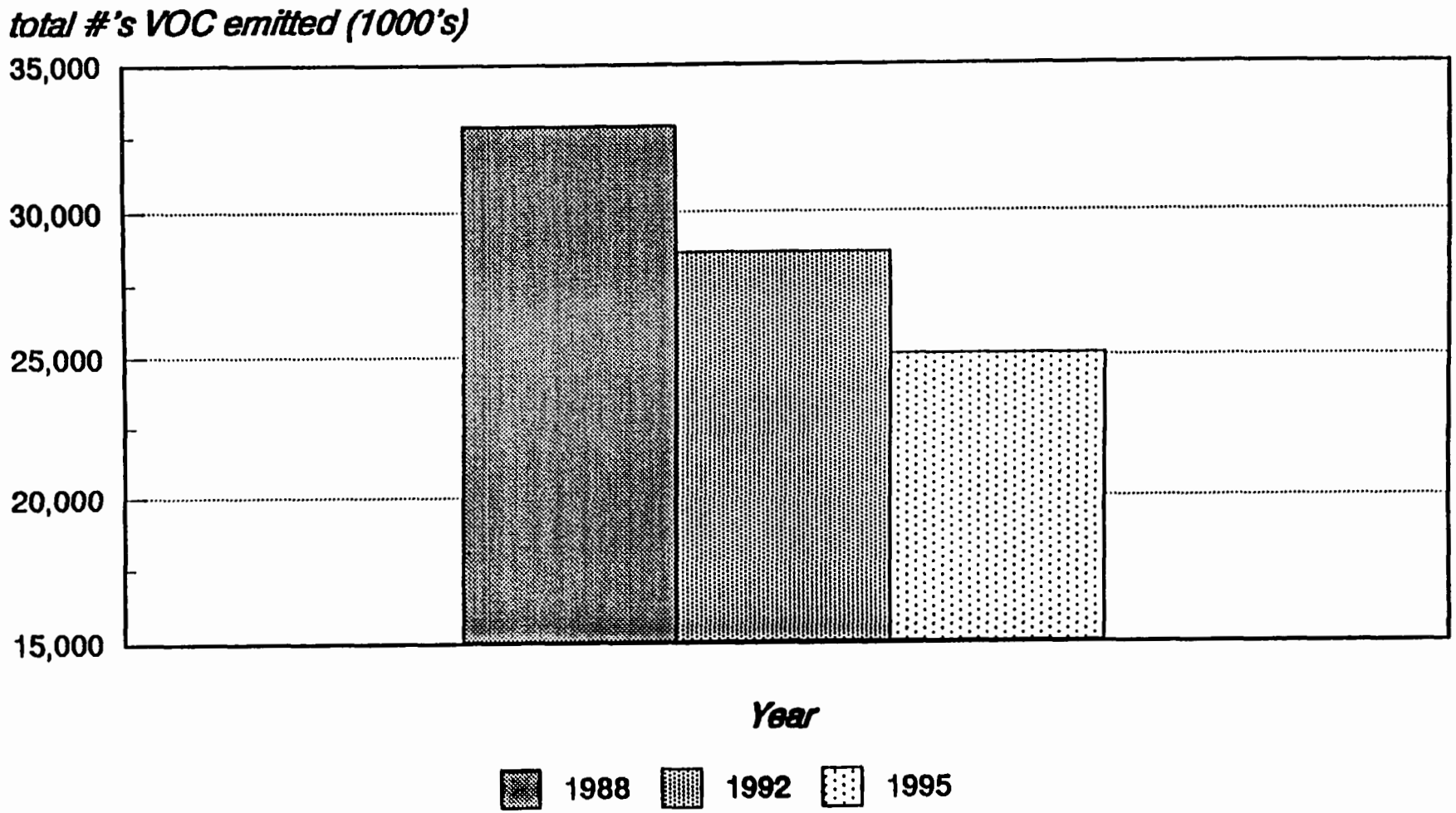

Calculations used high end of VOC for each VOC category

GRAPH II

TABLE 5-1. CONTROL OPTIONS (LOW VOC COATINGS)[a]

		Baseline*1	Control Level 1	Control Level 2	Number of Database Coatings Meeting Control Level 2-A
Automotive Interior					
-	ColorCoat	6.3	5.0	3.2	15
-	Primer	5.5	3.5	3.5	1[b]
Automotive Exterior					
Flexible					
-	Colorcoat	4.6	4.3	4.1	68
-	Clearcoat	4.3	3.8	3.5	7
-	Primer	5.4	5.0	4.5	3[b]
Non-Flexible					
-	Colorcoat	4.6	4.3	4.1	79
-	Clearcoat	4.3	3.8	3.5	10
-	Primer	5.0	4.5	3.5	3[b]

[a] All units are in lb VOC/gal. coating, less water, except for values in parentheses; the values in parentheses are percent solids, by volume.

[b] Telephone calls are being made to assess the availability of these coatings.

*1 What is the origin of these numbers?

TABLE 5-1. CONTROL OPTIONS (LOW VOC COATINGS)*
Revised Using Rule 632 and Values from Table 3-4

Operation	Baseline VOC[1]	Control Level 1[2]	Control Level
1. High Bake Coating - Exterior and Interior parts			
a. Prime			
(i) Flexible	6.6	5.0	4.5[6]
(ii) Non-Flexible	6.4	4.0	3.5[6]
b. Topcoat			
(i) Basecoat	5.8[5]	4.6[5]	4.3[5/6]
(ii) Red & Black Basecoat	6.68	5.3	4.9
(iii) Clearcoat	5.4	4.3	4.0[6]
(iv) Non-Basecoat/Clearcoat	6.0	4.7	4.3
(v) Red & Black Non-Basecoat/Clearcoat	6.9	5.4	4.9

[1] VOC levels as given in Table 3-4 partially and what is missing, based on industry survey data to EPA.
[2] Control levels of VOC as given in MI Rule 632, Table 65 effective after 12/31/89.
[3] Control levels of VOC as given in MI Rule 632, Table 66 effective after 12/31/92.
[4] Not dealt with in Table 3-4 but based on industry survey data to EPA.
[5] Because of technical consideration, as documented to EPA by industry, red and black colors VOC limits should be set by applying a 1.15 factor to the VOC limits given in Table
[6] VOC limits are for technology forcing products for which no Method 24 data is available and therefore are based on theoretical values. For baked coatings, Method 24 testing gives consistently higher values in the range of 0.4 to 0.5 lbs/gal of VOC.
[7] Speciality coatings have unique properties that lower VOC versions can't deliver. However, they are used in low volume and can be restircted to less than 5% of the daily or monthly volume used.

TABLE 5-1. CONTROL OPTIONS (LOW VOC COATINGS)[a]

Revised Using Rule 632 and Values fron Table 3-4

Operation	Baseline VOC[1]	Control Level 1[2]	Control Level 2[3]
2. Air-Dried Coating--Exterior Parts[(1)(3)]			
a. Prime	6.1[4]	6.1	4.8
b. Topcoat			
(i) Basecoat	5.8[4]	5.8	5.0
(ii) Red & Black Basecoat	6.67	6.67	5.75
(iii) Clearcoat	6.1[4]	5.4	4.5
(iv) Non-Basecoat/Clearcoat	6.3	6.3	5.0
(v) Red & Black Non-Basecoat/Clearcoat	7.25	7.25	5.75
3. Air-Dried Coating--Interior Parts	6.8	6.3	5.0
4. Touch Up and Repair[(3)]	6.8[4]	6.3	5.2
5. Specialty Low Volume Coatings	7.0[4/7]	7.0	7.0

1 VOC levels as given in Table 3-4 partially and what is missing, based on industry survey data to EPA.
2 Control levels of VOC as given in MI Rule 632, Table 65 effective after 12/31/89.
3 Control levels of VOC as given in MI Rule 632, Table 66 effective after 12/31/92.
4 Not dealt with in Table 3-4 but based on industry survey data to EPA.
5 Because of technical consideration, as documented to EPA by industry, red and black colors VOC limits should be set by applying a 1.15 factor to the VOC limits given in Table
6 VOC limits are for technology forcing products for which no Method 24 data is available and therefore are based on theoretical values. For baked coatings, Method 24 testing gives consistently higher values in the range of 0.4 to 0.5 lbs/gal of VOC.
7 Speciality coatings have unique properties that lower VOC versions can't deliver. However, they are used in low volume and can be restircted to less than 5% of the daily or monthly volume used.

JOE LENNON, FORD MOTOR COMPANY, REPRESENTING
MOTOR VEHICLE MANUFACTURERS ASSOCIATION

Summary of Joe Lennon's Presentation

Mr. Lennon opened by stating that the Motor Vehicle Manufacturers Association (MVMA) is in agreement with the comments made by NPCA concerning the plastic parts CTG. Mr. Lennon's comments address coating automotive plastic parts only, and, generally speaking, MVMA supports the VOC control levels in Michigan's Rule 632.

Specifically, MVMA recommends that VOC control options be developed for additional coating categories; the additional categories needed are air dry coatings, and red and black coatings. MVMA and NPCA have submitted technical papers to EPA describing the special needs of these coatings.

The MVMA also objects to EPA's method of setting control options based on lowest available VOC contents for each individual coating category. Coatings should be considered as part of a coating system where the specifications of all the coatings used together are considered.

New VOC limits will require reformulation of coatings, which in turn triggers a time consuming product approval process. For example, new coatings must be proven resistant to sun, salt, and weathering. The Michigan rule allows time for development and approval of new coatings by phasing in controls over time in two increments. The options presented by EPA do not appear to leave enough time for the approval process.

Lower VOC coatings can compromise the finish appearance and quality of coating. Since U.S. car manufacturers must compete in a world-wide market, lower VOC content requirements may affect their ability to compete. MVMA feels that the color and appearance of the coating is a primary selling point for automobiles.

Coating durability is also affected by VOC levels. If reformulated coatings are not given adequate durability tests, they may be released on the market prematurely. Resulting durability failures will cause the need for increased refinishing, as well as increased warranty complaints.

Regarding add-on controls, Mr. Lennon stated that Michigan Rule 632 allows for VOC reduction without the use of

VOC levels cannot be achieved through reformulation. Mr. Lennon continued that the Michigan rule deliberately avoids add-on technologies because small coaters would be driven out of business if add-ons become necessary.

The MVMA also questions the capture and control efficiencies (100 percent and 98 percent, respectively) used in the CTG model facilities. Mr. Lennon pointed out that in the CTG the cost effectiveness figures for incineration exceed lowest achievable emission rate (LAER) cost effectiveness figures.

Mr. Lennon next addressed specialty coatings. Specialty coatings are generally high VOC, low usage coatings, and it is not economical to reformulate them. The MVMA recommends that EPA either exempt specialty coatings or set higher VOC limits for them.

Finally, Mr. Lennon commented on four particular sections of the draft CTG. He disagreed with the transfer efficiency in Table 3-4. Based on limited testing on a bumper painting line that used HVLP and electrostatic spray guns, MVMA feels that 32 percent transfer efficiency is more appropriate for HVLP guns than the 50 percent figure used in the model plants. He agreed with the EPA presentation on transfer efficiency and said he was pleased that EPA did not plan to recommend explicit quantitative consideration of transfer efficiency. In Section 5.1.1, the emission points addressed are not adequate; MVMA feels that building vents, water pits, and paint mixing areas also contribute to emissions, so you cannot assume that all VOC is emitted from the spray booth, flash-off area and bake oven. Under Section 7.3.2, MVMA recommends that when plastic and metal parts are coated together, the less restrictive VOC level should apply. In Section 7.8.3, the MVMA feels that quarterly or bi-annual performance testing is unreasonable and too costly. Performance tests should be limited to major breakdowns or equipment replacement.

COMMENTS TO UNITED STATES ENVIRONMENTAL PROTECTION AGENCY'S NATIONAL AIR POLLUTION CONTROL TECHNIQUES ADVISORY COMMITTEE

REVIEW OF OCTOBER 1, 1991 DRAFT SURFACE COATING OF PLASTIC PARTS CONTROL TECHNIQUE GUIDELINE

DURHAM, NORTH CAROLINA
NOVEMBER 20, 1991

Motor Vehicle Manufacturers Association of the United States, Inc.

I. INTRODUCTION

- REPRESENTING MOTOR VEHICLE MANUFACTURERS ASSN. (MVMA)
- SUPPORT OF COMMENTS BY NATIONAL PAINT & COATINGS ASSN. (NPCA)
- MICHIGAN RULE 632 – MODEL

II. CTG SUBJECTS OF CONCERN

- COATING CATEGORIES
- COMPATIBLE PAINT SYSTEMS
- APPROVAL PROCESS TIMING
- QUALITY APPEARANCE
- DURABILITY OF COATINGS
- WARRANTY CONSIDERATIONS
- RACT ADD-ON CONTROL
- SPECIALTY COATINGS

III. CATEGORIES OF COATINGS

- ADDITIONAL CATEGORIES NEEDED
- RULE 632 STUDIES
- CTG CATEGORIES NEEDED
  - AIR DRY COATINGS
  - RED & BLACK COLORS
  - MVMA/NPCA TECHNICAL SUBMISSIONS

IV. COMPATIBLE PAINT SYSTEMS

- TECHNOLOGY LIMITATIONS/ LOWEST VOC
- COMPATIBILITY NEEDS FOR APPEARANCE AND PERFORMANCE
- RACT CONTROL – REASONABLE VOC REFORMULATION

V. APPROVAL PROCESS TIMING

- EXTENSIVE AND TIME-CONSUMING
- COATING SUPPLIERS – CURRENT RESEARCH AND DEVELOPMENT
- IMPACT OF TABLE 5-1 LEVEL 1 CONTROL
- AVAILABILITY OF APPROVED COATINGS

VI. QUALITY APPEARANCE

- WORLDWIDE COMPETITION
- IMPORTANCE OF FINISH APPEARANCE AND QUALITY
- CUSTOMER EXPECTATIONS
- TABLE 5-1 LEVEL 1 VOC CONTENT MAY IMPACT QUALITY

VII. DURABILITY OF COATINGS

- AUTOMOBILE COATINGS MUST LAST IN THE ELEMENTS FOR AT LEAST 7-10 YEARS.

- PLASTIC AND METAL COMPONENTS MUST MATCH.

- PREMATURE DURABILITY FAILURES WILL CAUSE REPAINTING – IMPACT VOC EMISSIONS.

VIII. WARRANTY CONSIDERATIONS

- CUSTOMER LOYALTY
- FINANCIAL CONCERNS
- REFORMULATION MAY ADVERSELY IMPACT WARRANTY AND TIMING

IX. RACT ADD-ON CONTROLS

- RULE 632 STRATEGY/NO ADD-ON CONTROLS
- SMALL BUSINESSES INVOLVED
- DRAFT CTG VALUES IN TABLE 5-1 LEVEL I MAY FORCE ADD-ON CONTROLS
- EXCESSIVE COST OF ADD-ON CONTROLS
- RULE 632 REQUIRES ADVANCED APPLICATION EQUIPMENT

X. SPECIALTY COATINGS

- UNIQUE REQUIREMENTS
- HIGHER VOC CONTENT/LOWER VOLUME
- REFORMULATION LIMITATIONS
- EXEMPTION OR HIGHER VOC LIMITS

XI. ADDITIONAL COMMENTS

- TABLE 3-4 TRANSFER EFFICIENCY
  - HIGH VOLUME LOW PRESSURE (HVLP)
  - ELECTROSTATIC
- SECTION 5.1.1 EMISSION POINTS
  - MISCELLANEOUS VOC EMISSIONS
  - VOC CAPTURE LIMITATIONS
- SECTION 7.3.2 METAL/PLASTIC PARTS
  - LEAST RESTRICTIVE VOC LEVEL SHOULD APPLY
- SECTION 7.8.3 PERFORMANCE TESTS
  - QUARTERLY OR BI-ANNUAL REQUIREMENT IS UNREASONABLE, IMPRACTICAL AND COSTLY
  - SHOULD BE LIMITED TO MAJOR BREAKDOWNS OR EQUIPMENT REPLACEMENT

STEVE KISH, GRACO, INC.

Summary of Steve Kish's Presentation

Mr. Kish represents Graco, Inc., a manufacturer of spray equipment. Mr. Kish stated that the CTG assumed a transfer efficiency of 50 percent for electrostatic spray guns and HVLP guns, and 25 percent for air spray guns. He showed Graco test data which measured the transfer efficiency of electrostatic guns at 50 percent to 90 percent, HVLP guns at 28 percent to 50 percent, and air guns at 25 percent to 40 percent. In each case, the highest transfer efficiency was achieved at the lowest coating flow rate (3 oz./min), and the lowest transfer efficiency occurred at the highest coating flow rate (12 oz./min.). He went on to say that the pay back period for HVLP was 6 to 13 days, and for electrostatics it was 6 to 28 days.

Mr. Kish presented the savings potential for a large plastic parts coating plant using both HVLP and electrostatics, using air spray as a baseline. With HVLP, a 20 percent savings could be realized on coating. The assumption of this estimate is that the number of sprayers is held constant. It was stated that minimal training was required for an operator to switch from an air spray to HVLP. The limitation of HVLP systems is a throughput of 11 to 12 ounces of coating per minute. The HVLP gun was assumed to cost $400, and paint cost was estimated at $40/gallon.

When using electrostatic guns instead of air spray guns, a 42 percent to 50 percent savings could be achieved based on the same number of guns in use. If the number of guns used is reduced, the savings is reduced to 20 percent to 25 percent. There are significant cost considerations which are not included in this scenario. The first is increased primer coating cost due to the need to use a conductive primer coat. The second is the cost of operator training. Last, the electrostatic guns require more maintenance than air spray, about $50 to $70 per gun. The capital cost of the electrostatic gun is assumed to be $4000, and paint cost is $40 per gallon as with HVLP.

Mr. Kish concluded by stating that both HVLP and electrostatic application are cost effective and serve to reduce VOC emissions.

Comments & Observations Of Plastic Parts Coating CTG Document in the "Automotive/Transportation Facilities"

554

GRACO 1991

GRACO INC.
MINNEAPOLIS, MN

What CTG Says About T.E. in Various Operations

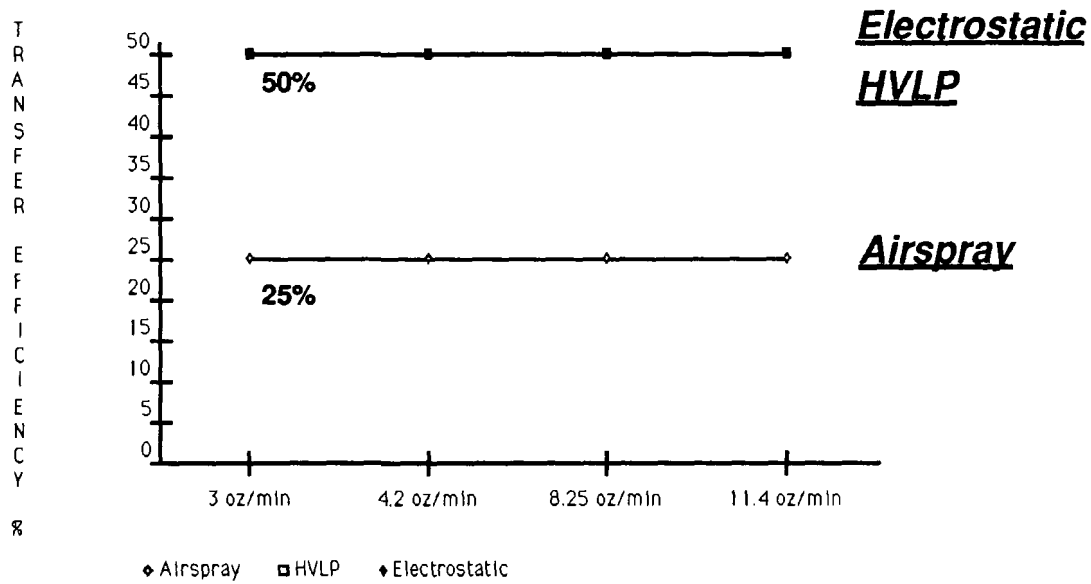

- Assumes 50% transfer efficiency for electrostatic application
- Assumes 50% transfer efficiency for HVLP application
- Assumes 25% transfer efficiency for airspray application

Plastic "automotive/transportation" flowrates based on .70 service factor

GRACO 1991

What Graco's Test Experience Shows About T.E.

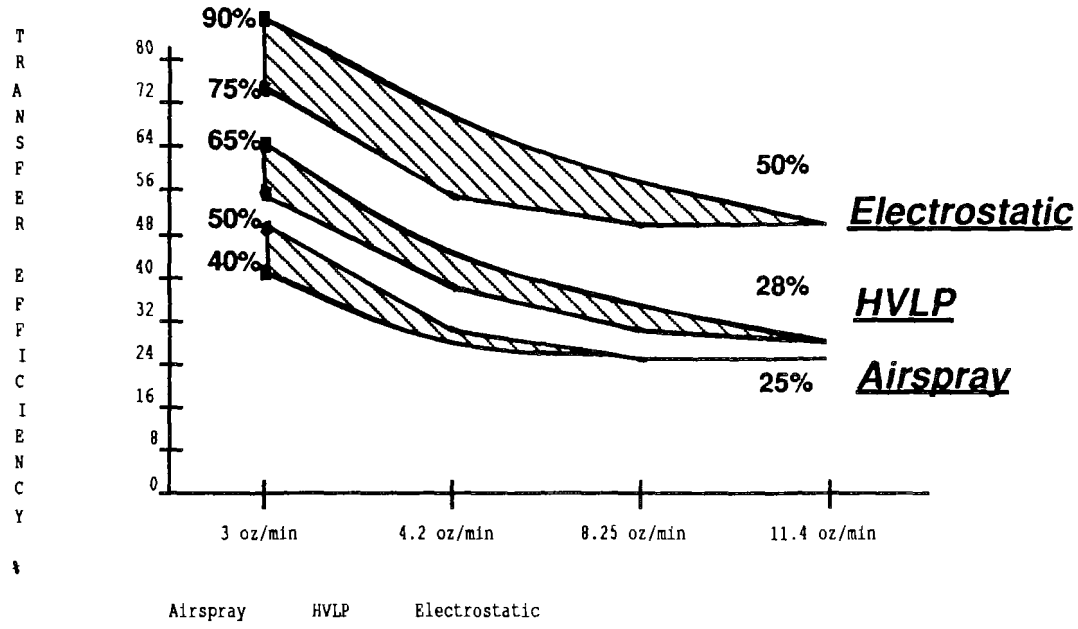

- Shows range of 50-90% transfer efficiency for electrostatic application
- Shows range of 28-65% transfer efficiency for HVLP application
- Shows range of 25-50% transfer efficiency for airspray application

Plastic "automotive/transportation" flowrates based on .70 service factor

GRACO 1991

Payback Period in Days at CTG Theoretical Flowrates

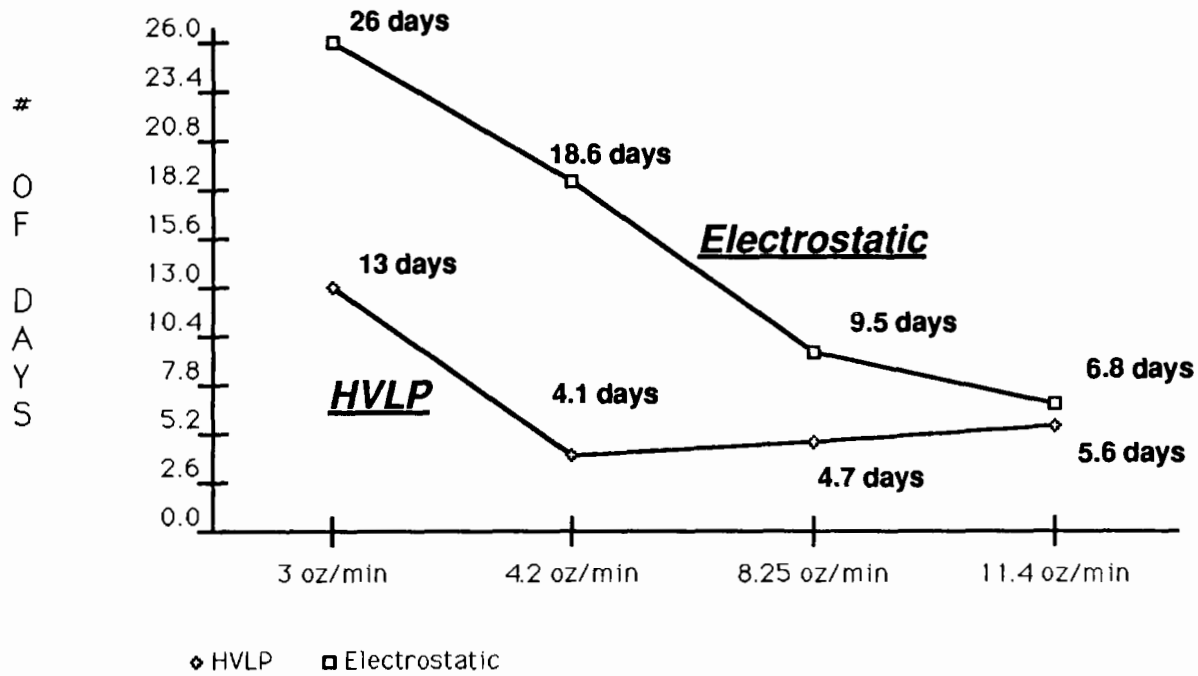

- Airspray transfer efficiency is baseline
- Based on 16-hour production day with $40/gallon paint cost
- HVLP initial cost est. $410
- Electrostatic initial cost est. $4000

GRACO 1991

Payback Period in Dollars at CTG Theoretical Flowrates

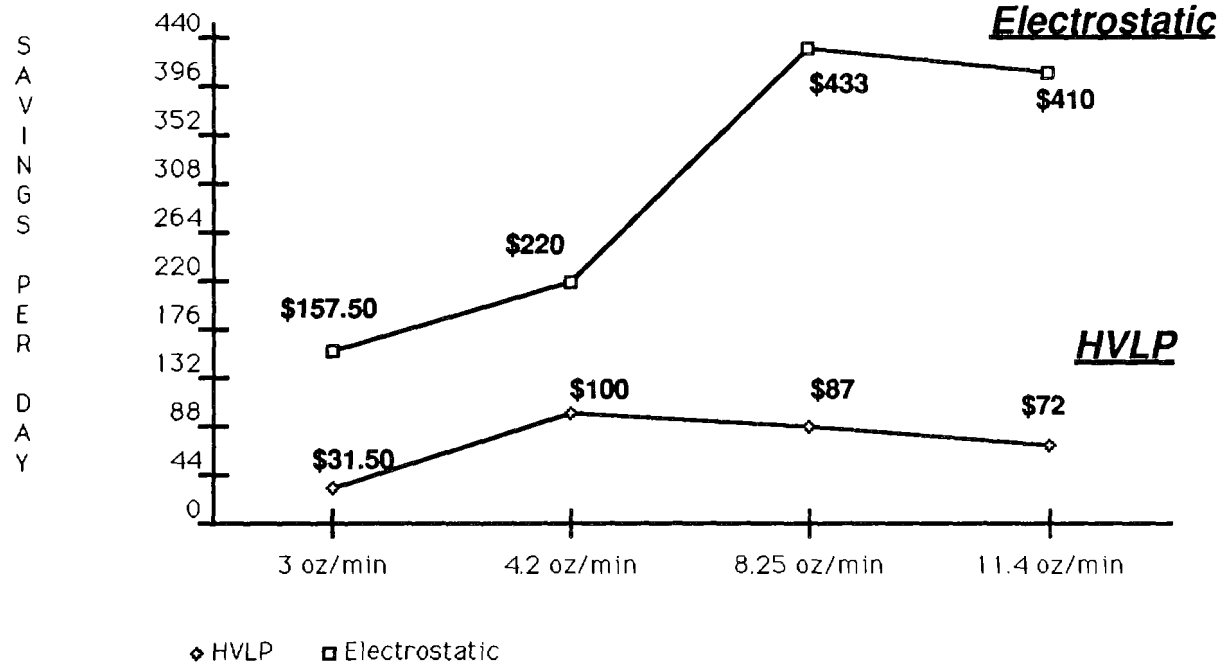

- Airspray transfer efficiency is baseline
- Based on 16-hour production day with $40/gallon paint cost
- HVLP initial cost estimate $410
- Electrostatic initial cost estimate $4000

GRACO 1991

Under CTG Enactment Using HVLP...

A Large Plastic "Automotive/Transportation Facility" Could Realize the Following:

- 20% savings on paint
- Retention of all spray stations
- Minimal adjustment costs associated with operator training
- Restricted ability to change coatings to higher solids or rheology (gun's ability at threshhold at current 11-12 oz/min)

Under CTG Enactment Using Electrostatic...

A Large Plastic "Automotive/Transportation Facility" Could Realize the Following:

- 42-50% savings on paint when retaining all spray stations
- 20-25% savings on paint when retaining half of existing spray stations
- Significant adjustment costs resulting from:
  - ✓ Conductive primer or spray supports
  - ✓ Operator orientation and training
  - ✓ Increased maintenance costs of $50-80/month/gun

GRACO 1991

For Further Documentation

GRACO INC.
P.O. BOX 1441
MINNEAPOLIS, MN 55440-1441

Thank You

GRACO 1991

JOHN L. WILLIAMS, MOBAY CORPORATION

Summary of Presentation of John L. Williams

Mobay is the leading supplier of polyurethane raw materials. This includes aliphatic polyisocyanate resins for polyurethane coatings. It is wholly owned by Bayer/AG of Germany. As of January 1, 1992, it will be known in the U. S. as Miles, Inc.

Mr. Williams stated that two-component flexible polyurethane coatings are the standard for the European automotive industry and have 25 percent of the U.S. market for exterior plastic automotive parts.

Mr. Williams stated that he felt the coatings now meeting the level of 2.3 lb VOC/gal for business machines compromise performance. VOC levels of 2.8 lb VOC/gal solvent-based are currently achievable with two-component polyurethane coatings. He said that Mobay (Miles) has technology to potentially meet VOC levels of 1.0 to 1.5 lb VOC/gal within one to two years with two component waterborne polyurethane coatings. He said this technology has not yet been tested in a large scale application and may be limited by industry acceptance.

One concern noted earlier at this meeting was the potential for health risks from polyurethane coatings. He stated that these types of coatings are the standard in Europe (25 percent of U.S. market), and that they pose no major health hazard with proper handling. Mr. Williams offered to supply health and safety information on polyurethane coatings.

In the area of automotive/transportation coatings, Mobay is developing two component polyisocyanate coatings for exterior clearcoat. The expected VOC levels for these developmental coatings are 2.5 to 2.8 lb VOC/gal. Mobay is also developing a 2.8 waterborne primer. Current limitations of these coatings are that they are not yet Toxic Substance Control Act (TSCA) listed. They have applied for listing and expect them to be available for sale by the 3rd or 4th quarter of 1992. Development of large scale production capacity for these coatings requires a large capital outlay that Mobay is prepared to make. Mobay supports the development of lower VOC coatings, but these new coatings must be performance and economically driven products. Mr. Williams stressed the need for cooperation between raw material suppliers, paint manufacturers, coaters and EPA.

Mobay's Role in Coatings for Plastics

Mobay

- Mobay is the leading North American Supplier of Aliphatic Polyisocyanate resins for use in polyurethane coatings
- Mobay sells resins to manufacturers of coatings for plastics
- Mobay seeks to act as a technical partner to the plastics coatings industry

Mobay Supports

Mobay

- The need for continued cooperation by the EPA with coatings raw materials suppliers, coatings manufacturers, and ~~refinish~~ plastic coatings users in allowing
- VOC compliant products to be optimized
- Lower VOC coatings to earn market acceptance on product merit and economic benefit

Current Status of Polyurethane Coatings for Business Machines

Mobay

Currently Available Technology	VOC (lbs/gal)
Primers	2.8
Colorcoats	2.8
Clearcoats	2.8

Systems can be improved by resin development and formulation changes to lower VOC levels and to optimize performance

Future Developments for PU Coatings for Business Machines

Mobay

VOC reductions possible with waterborne 2K polyurethane primers, color and clearcoats

Potential Benefits

- Reduced VOC color and clearcoats (1.5–1.0 pounds/gallon VOC)
- Reduced VOC water-borne primer (1.5–1.0 pounds/gallon VOC)

Present Limitations

- No large scale production at this point
- Reasonable currently commercially available technology in 1–2 years
- Technology would require
- Cooperative development with and the approval of coatings manufacturer
- Acceptance of business machine coating users

Future Developments for PU Coatings for Automotive Plastics

Mobay

Further VOC Reductions Possible with Higher Solids Two Component Polyurethane Topcoats and Waterborne Primers

Potential Benefits

- Reduced VOC 2K clearcoat and pigmented topcoat systems (2.5-2.8 lbs/gal VOC)
- Reduced VOC waterborne primer systems (2.8 lbs/gal VOC)

Present Limitations:

- All resins used in the system are not TSCA listed
- All resins do not have large-scale manufacturing capacity established
- Technology would require:
  - Cooperative development
  - The acceptance of the plastics coatings users with/and the approval of manufacturers of coatings

Mobay Supports

Mobay

The future development of lower VOC polyurethane coatings systems for plastics in cooperation with coatings manufacturers, coatings users, and the Environmental Protection Agency

U. S. Environmental Protection Agency, November 19–21, 1991

DISCUSSION ON PLASTIC PARTS COATING

QUESTIONS AND COMMENTS FROM THE COMMITTEE ON EPA PRESENTATION

Question: Are aerospace plastic parts covered under this CTG? The question has come up in California whether the plastic parts CTG or the aerospace CTG will cover these parts.

Answer: We do not know yet. We discussed this some with the aerospace industry at a meeting in March or April. The EPA will be meeting with representatives from the aerospace industry next week. Some aerospace parts, for example seat backs and tray tables, that are most likely coated outside of the facility may be best covered by this CTG. Other parts that are most likely coated at aerospace facilities, especially those that are coated as part of a larger assembly or complete aircraft, may be best to cover in the aerospace CTG.

Comment: There is a discrepancy between the cost effectiveness figures for incineration reported for the model plant analyses on slides 9 and 12 and for the national impacts reported on slide 13.

Answer: Yes, the national impact cost effectiveness figures should read $22,000 for automotive, $21,000 for business machines/miscellaneous, and $22,000 for the total. We plan to look at options for reducing air volume and increasing VOC concentration to bring these costs down.

Question: Do you propose that the coater or the coating manufacturer perform Method 24 tests for VOC content?

Answer: We have tried systems where the manufacturer provides Method 24 test information for each batch of coating so that the coater does not have to do the testing. The coater uses the manufacturer's test results and adds in any dilution solvent added to the coatings. We expect to recommend this system in this CTG. It is more economical for the coating manufacturer to run one test on a batch of coating than for many coaters to have to test coating from the same production batch.

Question: Do your emissions estimates include any emissions prior to spraying?

Answer: No, our estimates begin with spraying. We do not include emissions from paint mixing.

Question: Did your evaluation include alternatives such as dipping or molded-in color?

Answer: We tried to show in the CTG that there are alternatives such as dipping and molded-in color, but we are reluctant to tell the industry to dip rather than spray. The appearance of dip coated parts is not the same as spray coated parts. Some plastic parts do have molded in color. Coatings, however, enhance the performance of many plastic parts by improving color, gloss, chemical resistance, scratch resistance and ultra-violet resistance.

Comment: Considerable VOC emissions occur during gun cleaning. Consideration should be give to these emissions.

Answer: More will be said about this subject during the auto refinishing presentation. We will listen in and see if there is something we can apply in this CTG.

Comment: Consideration should be given to controlling different types of booths or subsets of booths.

Answer: We will consider doing so. There are examples today of facilities where automated booths are controlled and manual booths are not controlled.

Question: You have estimated about 40,000 tpy VOC emissions from plastic parts coating. Is this large or small relative to other sources in non-attainment ares? It sounds large.

Answer: In most areas there are many small pieces of the VOC pie, not a single large piece that accounts for the majority of emissions. There are some large plastic parts coating facilities, but as a percentage of total VOC emissions in a single non-attainment area they are probably not very large.

Questions and Comments from the Committee on Naomi Suss' Presentation

Question (Committee): There is a large discrepancy between the estimated VOC emissions from EPA and NPCA. Can you explain the reason?

Answer (NPCA): The NPCA surveyed its members and obtained Method 24 data and quality control data; these values were then multiplied by the amount of coating actually sold. We don't know how to account for the differences; either party could have made an error.

Question (Committee): Is the flexibility afforded by the Method 24 0.5 pound scaling factor in Michigan's rule still needed, or can it be eliminated because of knowledge of coatings currently on the market?

Answer (NPCA): These factors were needed when Rule 632 was developed because the rule was technology forcing. Coatings that met the emission limits were not available. There are some coatings available now, but the scaling factor should not be eliminated yet since there are still applications where it is required.

Question (Committee): A half-pound of VOC per gallon of coating seems like a lot.

Answer (NPCA): Let me give you an example of why a half-pound is appropriate. The typical coating used for automotive plastics is a melamine-polyol type cross linking mechanism. These release by-products, such as methanol and butanol, via a condensation reaction that can vary from batch-to-batch. These VOCs are not part of the original coating formulation. They cannot be calculated until you have substantial production history for the coating to tie the value down.

Question (EPA): Then why not just set higher standards for these combinations?

Answer (NPCA): That is an option.

Question (Committee): How does choosing to disperse pigments in resins rather than in solvents affect the VOC content?

Answer (NPCA): Most pigments are dispersed in resins; but at higher solids contents, solvent may be required to minimize agglomeration. A point of diminishing returns is reached.

Comment (NPCA): Red coatings can cost two or three times as much as other coatings and may reach $120 per gallon. Coaters require more of these coatings to cover their parts. Industry supplies such coatings because they are in demand,

Question (EPA): Were the sales figures just for Michigan?

Answer (NPCA): No, the figures were for North America, including those members in Canada.

Questions and Comment from the Committee on Joe Lennon's Presentation

Question: What is the technical reason for using the less restrictive VOC level when plastic/metal combinations are coated.

Answer: There are relatively few situations where this occurs, and the industry needs flexibility to deal with them. The Michigan rule may instruct you to categorize parts as metal or plastic by the predominant type of material.

Question: Industry spokespersons have stated that there are obstacles to either reformulation or using add-on controls; however, there is a health problem to be addressed. How should it be addressed?

Answer (Naomi Suss, NPCA): The industry has the same health and safety concerns. The automobile industry has worked very hard to reduce emissions and has had many successes. The plastic parts coating industry is pursuing reformulation solutions. Progress has been made. For instance, there has been an increase in weight solids content of 250 percent over the past 10 years; 40 percent of automotive interior coatings VOC level will be down to 2.5 lbs VOC per gallon of coating or less by next year. Powder coatings are being investigated. One use of powder coatings is on an SMC grille opening panel for Chrysler vehicles. Waterborne coatings are being introduced for color coats, one color at a time to match with vehicle bodies coated with waterborne basecoat. Also, two component isocyanate coatings are being evaluated, but there are health concerns and concerns about the ease of handling these coatings in production situations.

Answer (Joe Lennon): Ford will be using waterborne coatings for all interior parts at one of its plants, but we still are not able to meet the Michigan Rule 632 levels at another plant. We have a contingency plan to install add-on controls at that facility.

Question: Would alternative curing processes, such as UV curing, provide a solution?

Answer (Naomi Suss, NPCA): UV curing does not show good performance with high solids coatings; so far for automotive applications it is better with low solids coatings.

Question: What emission reductions do you expect from Rule 632?

Answer: 15 percent by 1992, and 25 percent by 1995.

Comment (Committee): 25 percent is good, but we are looking for 75 percent reduction. Perhaps we need to look at add-ons.

Question: What are other countries doing about coating VOC emissions from plastic parts?

Answer (Naomi Suss): Nothing. They still use low solid lacquer colorcoats, and about 30 percent solids for their clearcoats. Germany is the only other country showing concern; they are using some waterborne coatings.

Question: Would you support an equipment requirement for transfer efficiency (TE)?

Answer (Naomi Suss): There are currently not many plants that use only conventional spray due to cost incentives of using higher efficiency guns. Electrostatic spray and HVLP are commonly used. Air-assisted airless is used for some interior parts, but rarely for exterior parts. Color matching on the third coat for metallic colors and, touch-up of nicks and scratches occurring during assembly requires the use of air atomized (conventional) spray. An equipment requirement would be acceptable if it allowed for these necessary uses of conventional spray equipment.

Comment (Committee): EPA may need to consider providing specific guidance on specialty coatings to avoid problems with implementation at the State level.

Comment (Committee): There are so many different types of parts whose quality may be impacted. It would help if the industry could give EPA information on which parts can meet the control options and which cannot, and a timetable for new coatings.

Comment (Naomi Suss): I have thought of one reason why our estimate and EPA's estimate of coating usage may differ. Our estimate did not include coatings used on plastic parts that are coated in assembly plants such as SMC hoods, fenders and grille opening panels. These coatings are covered by other regulations. We only included data on coatings used outside of assembly plants.

Questions and Comments from the Committee on Steve Kish's Presentation

Question (Committee): Can 90 percent transfer efficiency be achieved with electrostatics?

Answer: Yes, theoretically. That transfer efficiency (90 percent) was achieved at a paint flow rate of 3 oz./min. This is not a practical flow rate in a large plant. A more typical flow rate is about 15oz./min. The transfer efficiency at this flow rate would be about 50 percent for electrostatic spray, 30 percent for HVLP and 25 percent for air spray.

Question (Committee): This looks good. Why aren't electrostatic guns used?

Answer: They are in use in many plants, especially for automotive plastics.

Questions and Comments from the Committee on John L. Williams' Presentation

Question (Dave Salman): Do the stated VOC contents for the waterborne coatings exclude water?

Answer: Yes

Question (Dave Salman): What kinds of basecoats can be used with these new two-component automotive clearcoats?

Answer: We are not working on developing basecoats, but these clearcoats are intended for use with both solvent-borne and waterborne basecoats. More cooperative development work still needs to be done to prove compatability with specific basecoats.

Question (Committee): Would you recommend a regulation based on the VOC contents that you have presented?

Answer: We would recommend a level of 2.8 lb VOC/gal for Business Machine/Miscellaneous. For automotive coatings, we can't say that we definitely can reach the levels in Michigan Rule 632 or the draft CTG, but we are working towards them.

Question (Bruce Jordan): Are the CTG numbers too high?

Answer: I decline to say that they are too high, but that is the inference.

Question (Bruce Jordan): What do you think should determine the VOC content limits?

Answer: Performance and economics should drive the industry. The U.S. needs to stay competitive in the world market. I believe that the technology will soon be available to meet lower VOC levels and it will be polyurethane technology.

Question (Bruce Jordan): What will it take to push industry toward compliant technology?

Answer: EPA is forcing the technology, but a cooperative effort must be made so that performance is maintained.

Question (Bruce Jordan): What is required of EPA to get the cooperation required?

Answer: EPA, manufacturers, coaters, and suppliers must all work together. The market is performance and economics driven. VOC reduction and performance can go together.

Navistar International Transportation Corp.

6125 Urbana Road
P O Box 600
Springfield, OH 45501
513 390 2800

U.S. Environmental Protection Agency
Office of Air Quality Planning and Standards
Research Triangle Park, North Carolina 27711

INTERNATIONAL

November 14, 1991

Bruce Jordan, Director Emission Standards Division

SUBJECT: Plastic Parts Coating Draft CTG

Navistar International Transportation Corp. is a manufacturer of transportation equipment. Two facilities would appear to be potentially affected by the proposed CTG. The first manufactures mold compound (SMC) components for trucks and small boats, applying primer and conductive coatings to the truck components only. The second facility is a truck assembly plant which uses repair primers, acrylic enamels without clearcoat, acrylic enamels with clearcoat, and aftermarket repair coatings. Navistar appreciates the opportunity to provide comments and questions for the Draft CTG.

In Section 3.1 and other sections throughout the CTG, does "other mobilized equipment" include fiberglass boat hulls?

Section 4.4 states that no plastic coating operations have paint spray booth controls. The Navistar assembly plant in Springfield, Ohio, utilizes VOC controls on two paint lines which coat both miscellaneous metal parts and plastic parts using the same coatings.

Section 5.1.1 at the top of p. 5-2 States that coatings never leave the spray booth. However, this does not account for paint particles and soluble solvents entrained in the water of a waterwash booth which has a remote sludge handling system. Later in the document this is acknowledged on p. 5-9 in the first paragraph.

Table 5-2 Control levels should permit in-line volume weighted averaging of allowables when more than one type of coating is applied in the operation (i.e. BC/CC). Thus, if a source uses a clearcoat with a VOC content less than the RACT limit and a basecoat with a VOC content in excess of the RACT limit a daily volume weighted average would be used to determine the RACT allowable. A similar provision is found in the federal model rule

for can coating when sides, ends, etc. are coated in the same line.

Section 7.3.2 has an inconsistent overlap with the miscellaneous metal parts coating CTG and SIPs. Proposed control levels and baselines for plastics indicate color coatings with a higher VOC content than clear coatings, but the miscellaneous metal parts rules permit a greater VOC content for clearcoats and a much lower VOC content for colored material. Navistar finds the baseline VOC content for basecoats closer to the norm than the miscellaneous metal parts rules.

For operations coating both plastic and metal in the same operation, EPA should allow the least restrictive condition for clear and for color coatings to apply for both metal and plastic parts. EPA should not require separate record keeping for quantity of paint applied to metal and plastic or the respective surface areas coated. In addition, EPA must address the miscellaneous metal parts provisions which exempt the coating operations of custom vehicles if production is less than 35 vehicles per day. Many of Navistar s competitors use this provision to avoid regulation of their miscellaneous metal parts coating operations, including two in the state of Ohio.

Section 7.6.1 discusses transfer efficiency. If a transfer efficiency is included in the RACT determination, then EPA must also consider how this affects the miscellaneous metal parts painted in the same operation.

Section 7.7.2 does not recognize Method 25A but then in 7.7.3 calls for continuous emissions monitoring which yield "actual emission" measurements. Presumably this would be an FID calibrated to propane measuring a blend of solvents, like method 25A.

The proposed testing frequencies in Section 7.8.3 are unreasonable when required more frequently than annually.

Sincerely,

Tim W. McDaniel, CIH
Environmental Manager

.cc E. Ardiente
M. Culpepper

L/I 11-56
11/19/91

ELECTROSTATIC CONSULTANTS CO.

ENGINEERING & MANUFACTURING

P.O. BOX 1587 / LISLE, ILLINOIS 60532 / PHONE (708) 668-5027

November 15, 1991

U.S.EPA
Office of Air Quality
Planning and Standards
Research Triangle Park, NC 27711

Attn: Bruce C. Jordan, Dir.
Emission Standards Div.

Dear Mr. Jordan,

I received your notice of the next meeting of NAPCTAC and the draft of the CTG on surface coating of plastic parts. Section 3.3.2 on application coating equipment falls far short of the needs of the coating industry and I would like to explain the shortcomings of the listed spray equipment.

CONVENTIONAL AIR SPRAY

This class of guns has been the standard of the industry for the past 100 years but has been the primary cause of air pollution in the spray painting industry. The transfer efficiency (T.E.) is very poor. This class of guns should be retired as quickly as possible. This, of course, is already being done.

AIRLESS SPRAY

Airless spray equipment combines "engineering extremes" that can cause too many production problems. Extreme pressures are combined with extremely small paint orifices. It wastes paint by building excessive film thickness. This does little to reduce VOCs.

It also lowers quality of finish and falls far short of the flexibility of air guns. The gun was developed to improve on the low efficiency of air atomizing guns but it failed to replace the conventional air atomizing guns.

AIR-ASSISTED AIRLESS SPRAY

This is a variation of the airless gun and was designed to improve the atomization of the airless gun. By improving the atomization, smaller spray particles are produced and this lowers T.E. compared to the airless gun. The quality of finish is still substantially less than that of a conventional air spray gun and it cannot be expected to replace conventional air guns when a high quality of finish is essential. This gun does not offer a solution to high VOC emissions since the atomization is still relatively poor and the larger spray particles tend to waste paint by building excessive film thickness.

HIGH VOLUME LOW PRESSURE SPRAY

The hype generated with the HVLP spray gun seriously overstates it's value to the spray painting industry. The definition of an HVLP gun is not adequate to assure an improvement in T.E. and a reduction in VOCs. Variables that must be pinned down to insure an improvement in T.E. are as follows:

1. Atomizing air pressure, the only current requirement of an HVLP gun. (10 PSI or less).
2. Viscosity of coating material
3. Paint flow-rate (production speed)
4. Range of spray particle size at a given air pressure
5. Air volume
6. Spray velocity
7. Film thickness

Most of the variables indicated above will cause an increase in VOC emissions if they are adjusted in the wrong direction. An increase in air volume also increases spray velocity but this lowers T.E. and increases VOC emissions. Obviously, the definition that calls for high volume (HV) in HVLP is wrong.

A switch-over to an environmental coating is needed to reduce solvent in the coating but this also increases it's viscosity and makes the material more difficult to atomize. Larger spray particles are produced and while this may improve T.E., there is a corresponding increase in film thickness that causes an increase in paint consumption, an increase in VOCs and a lowering of quality. Under these conditions, the HVLP gun becomes unacceptable. It fails to do the job intended.

A reduction in paint flow-rate is in the right direction if it is combined with a corresponding increase in T.E. and may be self-defeating. It also has the effect of reducing production speed and greatly increasing operating costs. Once more, an HVLP gun may become unacceptable to the end user. Most HVLP guns on the market are currently criticized by the end user for lowering quality and cutting production speed. While many thousands of HVLP guns have been sold, they have done very little to reduce VOCs. Placing the emphasis on atomizing air pressure totally overlooks the many other important variables.

Our CFA 740 hand gun is the only so-called HVLP gun that controls <u>all</u> variables and actually achieves the end result of lowering VOCs. It is the only new invention in air atomization that has appeared on the scene in the last century. Unfortunately, it has a lot of unqualified competition that muddies the water and obscures it's merits. Our CFA 740 hand gun uses an entirely different form of air atomization that uses the energy available in compressed air far more efficiently than any other air atomizing spray gun. It is entitled to a separate and distinct classification. It is <u>not</u> a conventional air, airless, air-assisted airless or an HVLP gun with multiple air jets. The average HVLP gun is equivalent

to a downgrade of a conventional air gun.

Our CFA 740 hand gun is the best RACT available for non-electrostatic hand guns. It holds the quality and production speed of a conventional air gun while greatly improving T.E. and reducing VOC emissions. It will fully atomize the higher viscosity environmental coatings while staying under the 10 PSI atomizing air pressure specified for HVLP guns. This is the result of a major change in the mechanics of air atomization. The multiple air jets of a conventional air atomizer and HVLP atomizers are replaced with a single, converging annular air orifice and a diverging conical surface that converts the round stream of paint into a thin film prior to atomization. This concept is known as "Conical Film Atomization" and achieves equivalent atomization with a fraction of the energy required with other atomizers. The CFA 740 hand gun is low in cost and is interchangeable with all conventional air guns in use in the country. Enclosed is a "House Painting Report" that shows the CFA 740 hand gun approaching very close to 100% T.E. As quality standards are increased and the product size is reduced, the T.E. will drop somewhat. It achieved 65.5% T.E. on 8" x 11" panels in tests conducted by the SCAQMD. The 65.5% T.E. still represents a 62% paint savings and VOC reduction compared to a 25% T.E. conventional air gun. Since the gun will also spray higher viscosity, higher solids paint, it can achieve over 90% reduction in VOCs without requiring the need for very expensive add-on controls.

ELECTROSTATIC SPRAY

Electrostatic spray has not been used extensively in coating plastic parts. The first electrostatic system to apply waterborne coatings on plastic shutters is discussed in the enclosed reprint from the November 1982 issue of Industrial Finishing Magazine. It explains our proprietary, patented process for applying waterborne coatings on non-conductive or semi-conductive substrates. We never received permission for publishing the actual production photos because the shutters were a proprietary product manufactured for others.

Photo #1 enclosed shows the first production operation. Seven different colors are applied on this line. The shutters are painted 100% automatically and do not require manual touch-up.

Photo #2 enclosed shows the shutters passing through a baking oven for four minutes at 170°F. You will notice the warping of the shutters. They straighten out once more when cooled to room temperature. A higher baking temperature would destroy the shutters by making the warp permanent.

Photo #3 enclosed shows the isolated paint pressure tank that is charged to high voltage because of the electrical feedback from the charged guns. On new installations designed from scratch, it is possible to operate with the paint source at ground potential.

An entire fiber drum of paint fits inside the pressure tank. It is lifted out and replaced with a drum of paint of another color when changing colors.

The system can paint 7'0" high shutters at a conveyor speed of 15 FPM. The shutters are placed back-to-back about three minutes after leaving the baking oven and covered with clear, heat shrink plastic. They are then placed in cartons for shipment.

Photo #4 enclosed shows the Auto-Static 400 gun that is used to paint shutters. Mounted below the gun is a remote control fluid pressure regulator that is used to control the paint flow-rate. This gun also uses the improved "Conical Film Atomization" that was put on the CFA 740 non-electrostatic hand gun at a later date. This gun will easily apply high viscosity waterborne coatings. The amount of water used in the paint is kept low and the viscosity high. This permits building the desired film thickness without runs and sags. The system when operated with high viscosity waterborne paint is not sensitive to broad changes in relative humidity and avoids the high cost of air conditioning a spray booth.

Also enclosed is a piece of literature on our Aqua-Static 100 electrostatic hand gun for applying waterborne paint. While this gun easily outperforms all other electrostatic hand guns on

waterbornes, we consider it obsolete. We are in the process of replacing it with a new model. The Aqua-Static 100 was first placed on the market in 1971 but our competitors managed to destroy the market for waterborne paint and pushed for high solids paint. The Aqua-Static 100 gun used the conductive waterborne paint to bring the electrostatic charge to the head of the gun. It functioned as a non-electrostatic gun when used with non-conductive solvent base paint but would still atomize the high solids coatings much better than other spray guns. Our competitors controlled the market but failed to solve environmental problems.

With our automatic electrostatic guns equipped with "Conical Film Atomization" and a proper waterborne or high solids environmental coating, the need for installing expensive add-on controls can be avoided and still meet the most stringent environmental codes. The enclosed colored environmental comparison for liquid coating shows a 94% reduction in VOCs. Attached to this chart is a news release that explains the switch-over to a waterborne powder slurry to cut VOC emissions by 100%. The operating costs of this system will be half that of a dry powder system.

Our Auto-Static 400 electrostatic spray system is by far the best RACT available to the plastic industry. With a waterborne coating, it can reduce VOCs by 94% or more.

Electrostatic spray equipment is substantially more costly than HVLP guns but can quickly be justified with heavier production requirements. In order to obtain the many advantages of electrostatic spray combined with "Conical Film Atomization" to achieve superior atomization at still lower air pressure, it is necessary to install our Auto-Static 400 automatic electrostatic equipment. It will pay for itself with paint and labor savings in the first year. Other electrostatic air gun systems are still using conventional air atomization that is severely limited when attempting to apply the higher viscosity environmental coatings. They were designed originally to atomize low viscosity non-compliance paint and cannot properly apply the new high viscosity waterborne and high

solids environmental coatings.

Disk and bell electrostatic systems have serious drawbacks. They do very poorly atomizing conductive waterborne coatings. There is a serious reduction in quality. They also provide very poor "throwing power" into recessed areas and require far too much manual touch-up. The touch-up is normally done with low efficiency touch-up guns that cause a serious drop in overall efficiency. This greatly increases overall paint consumption and VOC emissions.

One of our old customers manufacturing folding chairs gave a talk at a local seminar recently. We replaced two reciprocating disks and three touch-up men with our Auto-Static 400 electrostatic system at his plant. The improvements achieved were as follows:

1. Increased production at least 10%

2. Eliminated two of the three touch-up men

3. Cut overall paint consumption by 30% and reduced VOC emissions a corresponding amount.

4. Reduced annual rejects by $100,000

5. Switched the firm over to waterborne coating to achieve full environmental compliance

6. Eliminated a potential fire hazard

7. Cut costs by 50% over competitive dry powder systems

Our continuous efforts to solve air pollution in the spray painting industry since 1969 are finally starting to pay off.

Sincerely,

Wally

Arvid C. Walberg CMFgE

ACW/mv
Enclosures

ELECTROSTATIC CONSULTANTS CO
P.O. BOX 1587 / LISLE, ILLINOIS 60532
PHONE (708) 668-5027

July 3, 1991

HOUSE PAINTING REPORT

A new sales field has been added to the scope of the CFA 740 air-atomizing non-electrostatic hand spray gun. A wooden frame home with vertical redwood siding was sprayed in Carmichael, Ca. and achieved almost 100% transfer efficiency (T.E.). The gun coated 300 sq.ft./gal with a paint that was rated as follows:

COVERAGE

250 - 350 sq.ft./gal on smooth surfaces
150 - 250 sq.ft./gal on porous, rough or weathered surfaces

Since the description of the wooden surface fit the latter description rather precisely, the actual performance of 300 sq.ft./gal was exceptional. The condition of the surface tended to indicate that two coats might be required to achieve good coverage. The single coat proved to be more than adequate and provided excellent coverage and uniformity. The actual coverage indicated on the paint can as shown above was with a brush or roller. The CFA 740 air atomizing spray gun actually provided even better performance.

PAINT

Sears Weatherbeater, #21455 Navajo Red solid color stain made for Sears by Olympic. Contents:

Water, Vinyl Acrylic Resin, Silicon Dioxide, Ethylene Glycol, Alkyd Resins & Additives

Reduction: 2 Paint, 1 Water
Viscosity 79 Sec. #2 Zahn Viscosity Cup

Max. VOCs: 350 GMS/liter
2.92 Lbs/gal

SPRAY GUN

CFA 740 hand gun (air atomizing with Conical Film Atomization) complete with 1 qt. pressure cup. Fluid orifice 0.120", restrictor orifice 0.40" and 0.052". 25' air hose, 3/8" I.D.

AIR COMPRESSOR

Sears Craftsman 1 HP, 8 Gal. Tank.
4.5 S.C.F.M. at 40 PSI
3.0 S.C.F.M. at 90 PSI

Compressor shut off automatically when 100 PSI was reached and restarted when tank pressure dropped to 80 PSI. A small air pressure regulator on the tank supplied compressed air to the spray gun.

OPERATING CONDITIONS

The paint is normally applied with a brush or roller. The label indicated an airless gun could be used and the paint applied uncut. Conventional air atomizing spray guns are not used for this type of application because of the excessive spray fog and paint waste normally generated. The CFA 740 hand gun was the first air atomizing spray gun to be successfully and economically used to paint a home. The paint waste was negligible and the quality of the final coating was excellent

The attached air pressure curve shows the operating conditions for the spray gun. The gun was operated as follows:

UPSTREAM AIR PRESSURE, P_1	20 PSI
ATOMIZING AIR PRESSURE, P_2	5 PSI*
PAINT PRESSURE	6-9 PSI

* Meets California's SCAQMD environmental requirements (10 PSI is upper limit). Conventional air atomizing guns are currently barred from use in the state.

The 0.040" restrictor orifice was installed in the paint inlet connection of the gun. This provided a relatively slow speed and was replaced with a 0.052" restrictor orifice to increase speed. The spray gun proved to be much faster than a brush or roller and applied a higher quality finish. It was probably slower than an airless gun but by precisely controlling the amount of paint applied to the surface, far less paint is used. The gun could also be operated at much higher speeds if necessary.

In tests last year, DuPont preferred the CFA 740 hand gun for maintenance painting over an airless gun. Their primary complaint was that it did not use enough paint. I advised them that they could raise the price of paint used with the gun but they indicated this could be done over a long period of time but not overnight. DuPont tried the gun for painting storage tanks in refinery tank farms, piping, buildings and even for maintenance painting on an oil platform in the Gulf of Mexico. The gun is an excellent prospect for replacing all airless spray equipment used by painting contractors. It provides very high painting efficiency while retaining all of the flexibility of a conventional air atomizing gun. It also has a major advantage over all other guns used in the wood coating industry.

The primary bottleneck for house painting was the small air compressor used. It had to be operated almost continuously. The compressor was equipped with thermal overload protection that tripped the compressor off occasionally because of the 100°F. weather conditions. It was necessary to allow the thermal overload protection to cool for a while to permit an automatic reset. The compressor was kept in the shade to minimize the overload shut-off problem. An extension cord with larger wire size would also have been helpful

The 1 HP compressor was selected since it could be operated off of a 15 amp, 110 volt household circuit. Most conventional

air atomizing spray guns require a 4 to 5 HP compressor to supply a single spray gun. This is much too large for a 110 volt household circuit and a compressor that large would have to be operated with a gasoline engine. Industrial plants with central air compressors would easily supply sufficient compressed air for continuous operation.

When painting metal gutters and downspouts, it was necessary to reduce the paint flow-rate by reducing the fluid pressure since these smooth surfaces required far less paint. The same thing could be accomplished by moving the spray gun much faster.

LIMITATIONS

Operating with a one quart pressure cup required frequent filling and slowed down production. The cup would also supply air instead of paint when aimed on an upward angle. This prevented spraying of eaves and the ceiling of porches. The pressure cup also added a lot of weight to the gun and made it less manueverable. The extra weight made the gun more tiring.

The above problems could be corrected with a pressure cup supported from the belt of the sprayer. A larger pressure tank could be left on the ground or attached to the air compressor dolly. The paint would be fed through a fluid hose to the spray gun. This would cause a static pressure head reduction of 0.4 to 0.5 PSI for every foot of increase in elevation of the spray gun above the paint pressure tank. When a sprayer operates on a ladder or scaffolding, he will have to increase the paint tank pressure by about 0.4 to 0.5 PSI for every foot he is above the paint tank. This will be needed to deliver the same amount of paint to the gun and maintain production speed. The pressure will have to be reduced by the same amount when the sprayer returns to ground level. A small fluid pressure regulator mounted on the gun would permit the operator to adjust the fluid delivery to suit his needs.

When we ran out of paint with the pressure cup, the spray gun could spit. While this was not a problem in the house painting

project, it would be a problem for automotive refinishing. A siphon cup would not cause a similar problem but it cannot be used with the CFA 740 hand gun. All conventional air guns that operate with a paint pressure tank would have the same problem.

For production maintenance painting, we would recommend a minimum of a 2 gallon paint pressure tank to avoid running out of paint frequently. The paint can be purchased in one gallon cans with an empty spare can purchased simultaneously. By splitting a gallon of paint into two one gallon cans, there is then room for adding water or thinner. The entire one gallon can can be placed into a 2 gallon pressure tank and avoid getting the pressure tank dirty.

A spray gun cannot be used to paint to the edges of windows without coating the window as well. This problem was solved by masking the windows and aluminum frames with newspaper and masking tape.

CONCLUSIONS

The CFA 740 hand spray gun is an excellent maintenance painting tool. It will compete successfully against brushes and rollers by providing greater paint mileage and by operating at higher speeds. It will also apply a higher quality, more uniform finish. The gun complies with all of California's environmental code requirements.

The CFA 740 hand spray gun can handle most of the contract painting work currently done with airless spray equipment. Equipment requirements are greatly simplified. The gun is far more flexible than an airless gun. It permits infinite adjustment of paint flowrate to provide the production speed desired. The spray pattern is fully adjustable. Quality of atomization and applied film thickness can be controlled with precision. Engineering extremes such as extremely small orifices and extremely high pressures are avoided. The CFA 740 hand gun moves spray painting away from a black art and into an exact science category.

ARVID C. WALBERG CMfgE

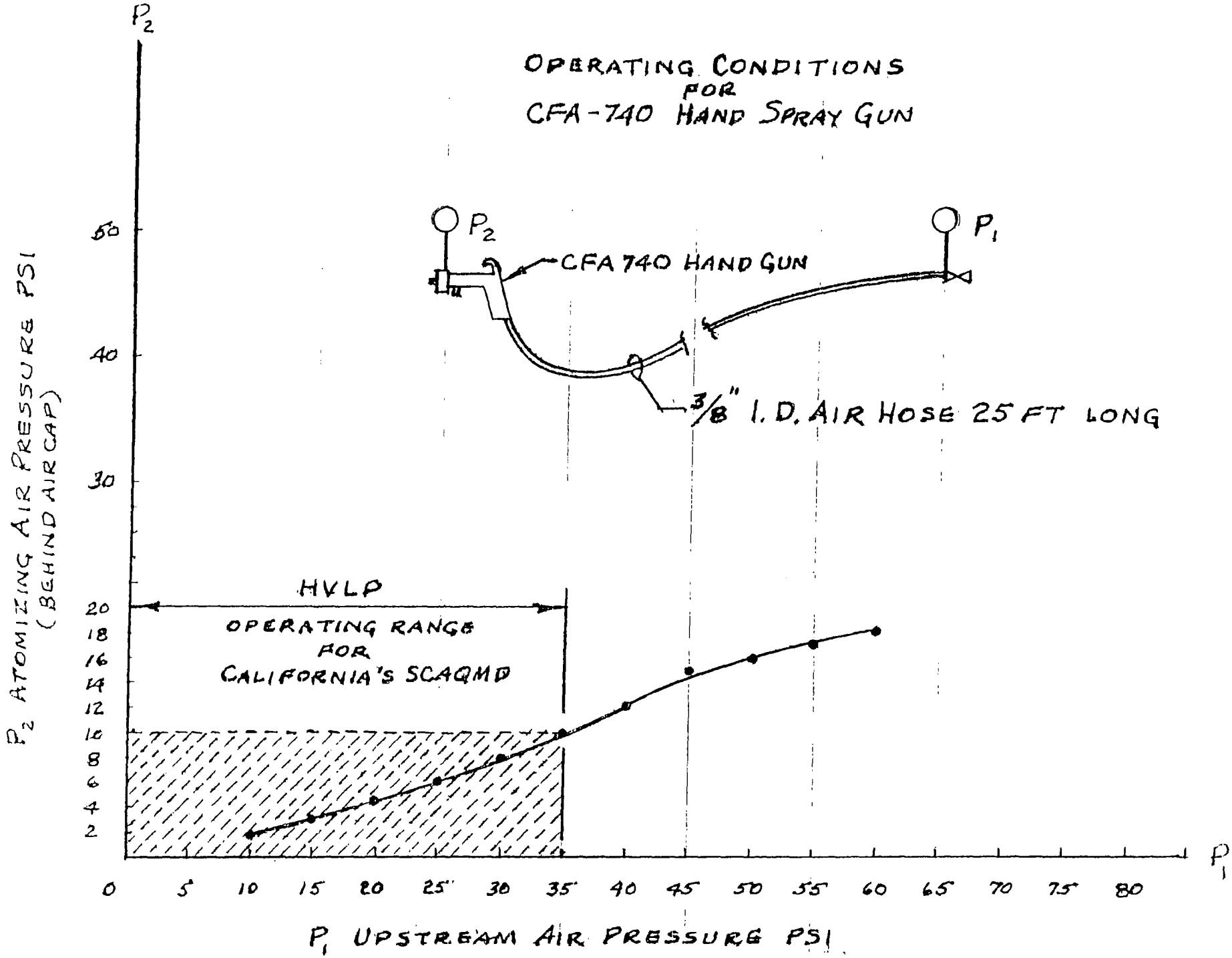
OPERATING CONDITIONS
FOR
CFA-740 HAND SPRAY GUN
P2
P1
CFA 740 HAND GUN
3/8" I.D. AIR HOSE 25 FT LONG
HVLP
OPERATING RANGE
FOR
CALIFORNIA'S SCAQMD
P2 ATOMIZING AIR PRESSURE PSI
(BEHIND AIR CAP)
P1 UPSTREAM AIR PRESSURE PSI
0
5
10
15
20
25
30
35
40
45
50
55
60
65
70
75
80
2
4
6
8
10
12
14
16
18
20
30
40
50

2/26/91

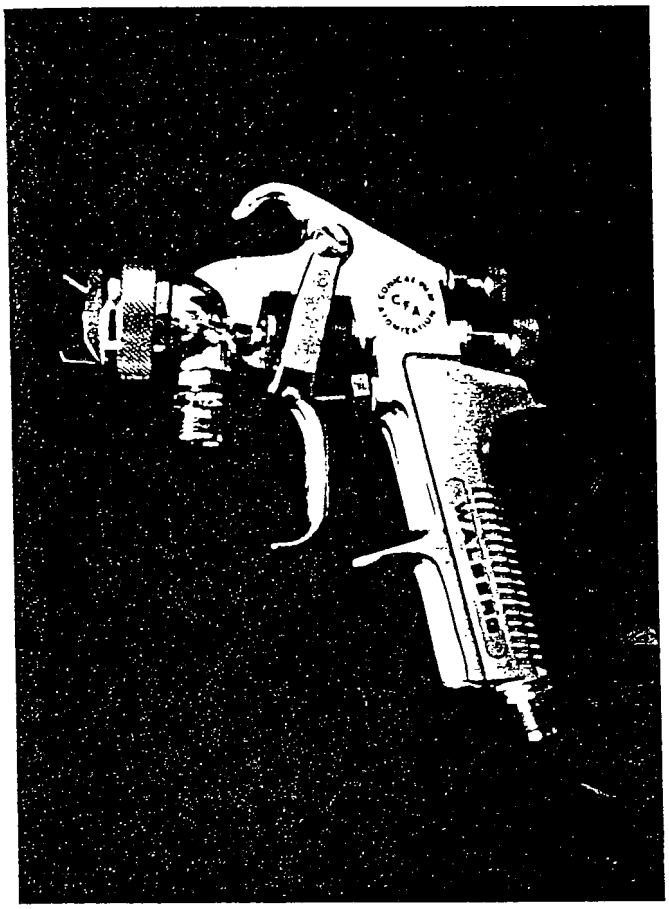

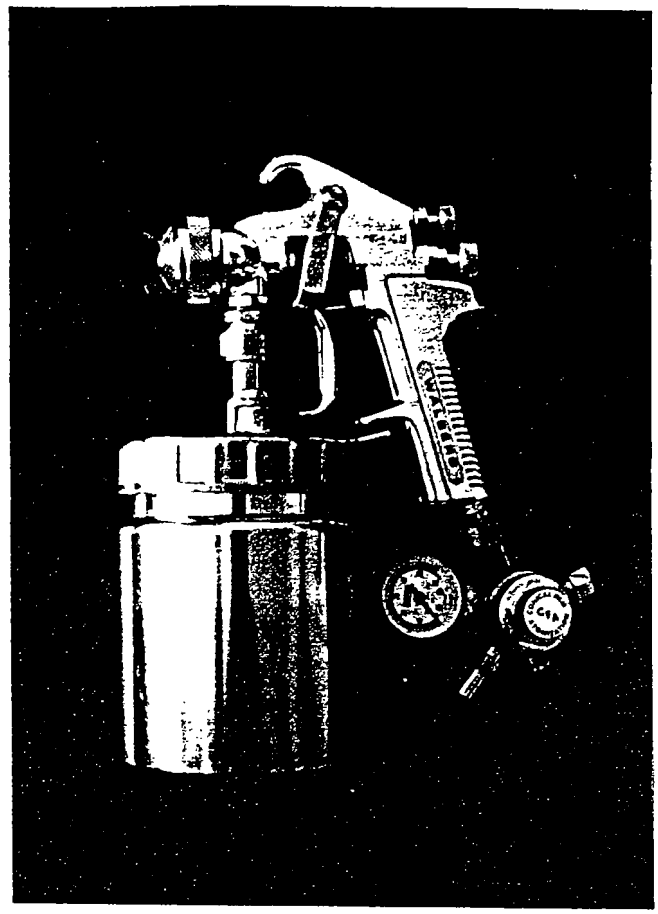

FOR BETTER OR FOR WORSE

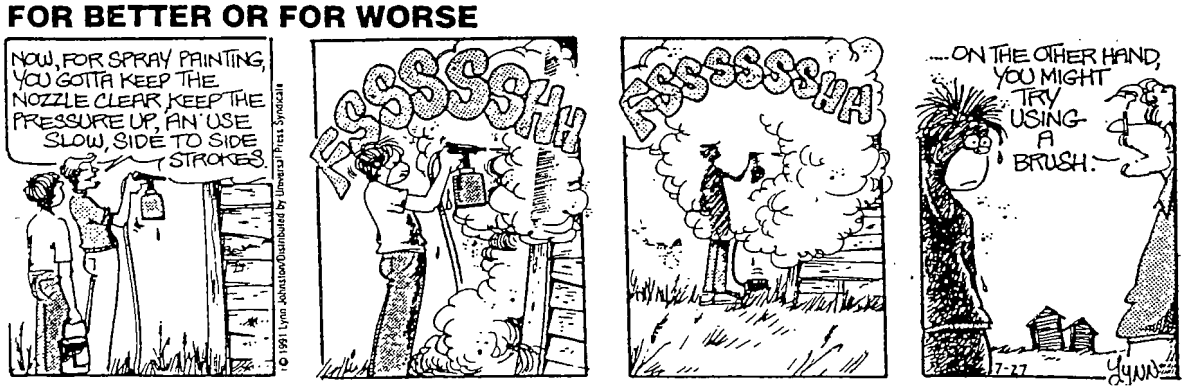

BETTER YET, BUY A CFA 740!

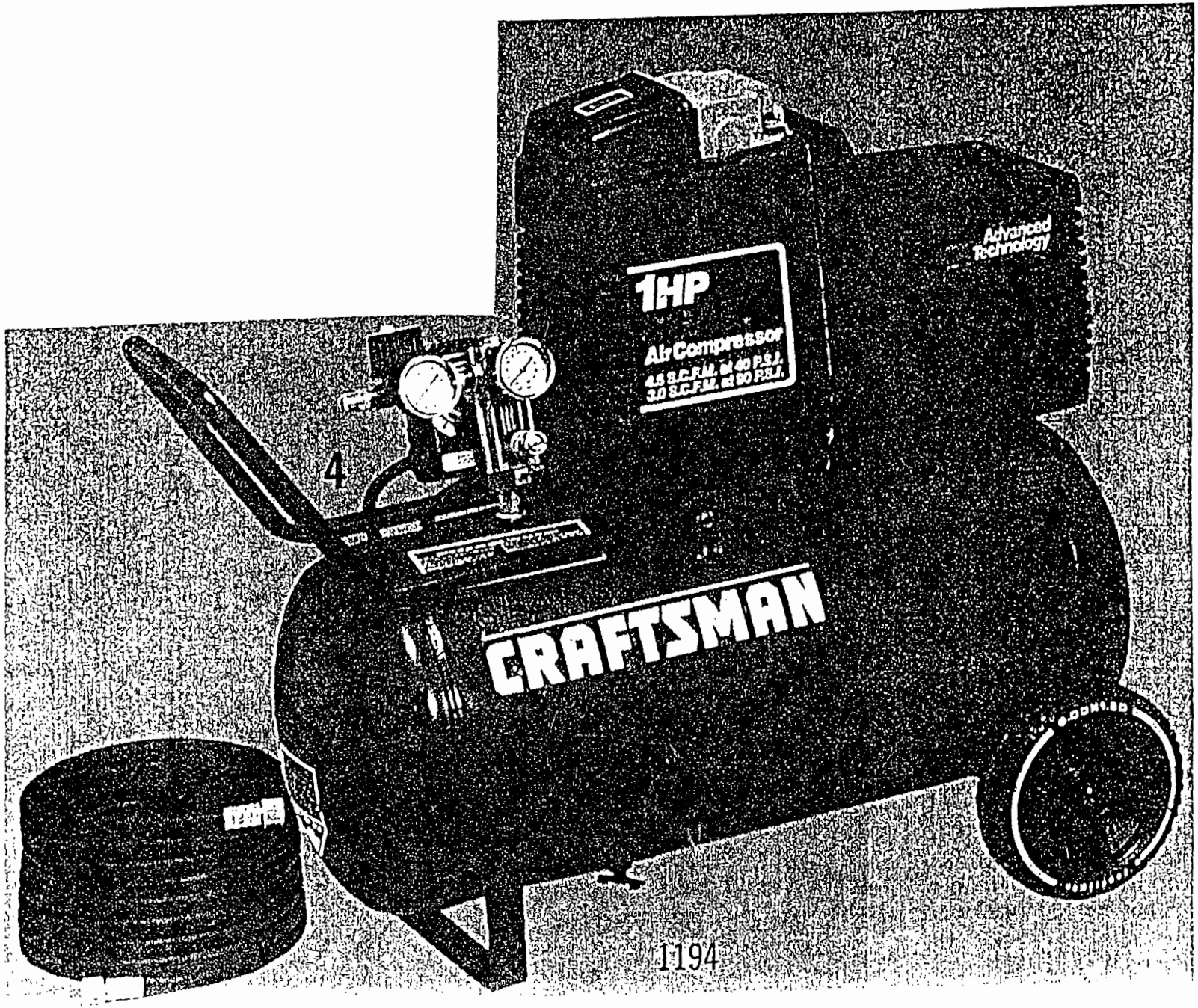
1HP
Air Compressor
4.5 S.C.F.M. at 40 P.S.I.
3.0 S.C.F.M. at 90 P.S.I.
Advanced Technology
CRAFTSMAN
DOWNLOAD

Reprinted from November 1982 issue of INDUSTRIAL FINISHING
© 1982 HITCHCOCK PUBLISHING COMPANY
ALL RIGHTS RESERVED

How to Spray Plastic and Wooden Products Electrostatically

By **Arvid C. Walberg,** President
Arvid C. Walberg & Co., Downers Grove, IL

Nonconductive surfaces can be sprayed electrostatically without the pretreatment normally used to make the surface electrically conductive. The basic law of electrostatic painting requires two electrodes in the system: one to impart a charge (usually negative) to the spray particles and another (usually grounded) to attract the paint particles for deposition. Both electrodes must be electrically conductive to make the system work properly. This basic law cannot be repealed, but it can be bent somewhat to accomplish desirable results.

By spraying nonconductive products electrostatically with waterborne coatings the desired results can be achieved. The charging electrode will be the spray device, preferably an air-atomizing electrostatic spray gun. We suggest air guns because airless guns lack the flexibility needed in automatic systems, and electrostatic atomizing devices such as disk and bell systems do not atomize conductive waterborne coatings as well as similar nonconductive solventborne materials. The paint particles are given a negative charge with the electrostatic gun.

Because the waterborne coatings are electrically conductive, an electrical feedback to the paint source will occur, and it is necessary to isolate the paint source from ground. The system would otherwise short out, eliminate the electrostatic field and make the system spray nonelectrostatically. Isolating the paint source from ground is very safe, and, in fact, the overall safety is greatly improved because waterborne coatings are not a potential fire hazard.

The charging electrode is more or less conventional. The collecting electrode functions in a nonconventional manner, however. Nonconductive products, such as the plastic shutters in the photo, start out essentially at ground potential so there is an initial attraction for negatively charged spray particles. The initial attraction of waterborne coating material makes the surface of the shutter electrically conductive through the paint film itself. A painted path to the grounded metal hanger is quickly completed and provides a direct path to ground. This bleeds off the electrical charge, and the electrostatic coating process continues in approximately the same manner as for a grounded metal product.

Automatic electrostatic spray guns apply waterborne coating to polystyrene window shutters without first applying a conductive pretreatment.

The waterborne coating greatly simplifies the electrostatic spraying of plastic and wooden products by eliminating costly pretreatment. Painting costs are reduced by about 50% compared to conventional nonelectrostatic spray equipment. In a typical installation coating plastic shutters, the viscosity of the waterborne coating is very high—30- to 60-sec range in a Zahn No. 2 cup.

After electrostatic painting, a 2-min flash is provided ahead of the bake oven. The parts are in the bake oven for 4 min with an oven temperature of 71 to 76C (160 to 170F). Higher temperatures would cause permanent warping of the plastic parts.

Three minutes after leaving the bake oven, two shutters are placed back-to-back and covered with clear heat-shrink plastic. The packaged shutters are then placed immediately into cartons for shipment.

***Arvid C. Walberg** is president of two manufacturing businesses: Arvid C. Walberg & Co. and Environmental Finishing Systems Co. Throughout his 32 years in electrostatic engineering he has been responsible for the design of more than 1000 automatic electrostatic systems installed around the world. He holds several dozen patents in the U.S. and foreign countries for his many innovations. An engineering graduate of the Illinois Institute of Technology, he is a member of the Society of Manufacturing Engineers and a certified manufacturing engineer in general finishing processes.*

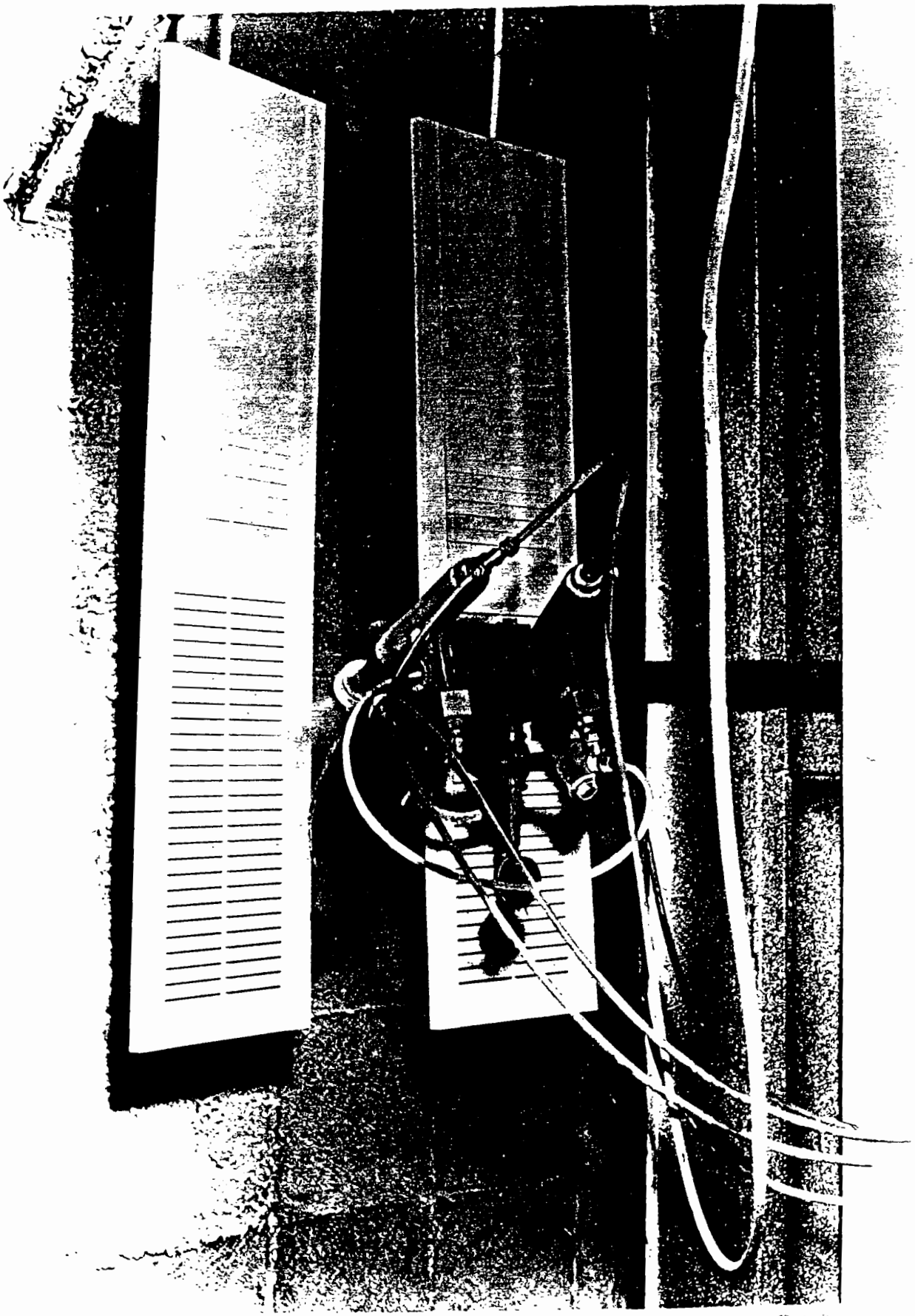

WATERBORNE COATINGS IN ARCTIC

#1

Photo # 2

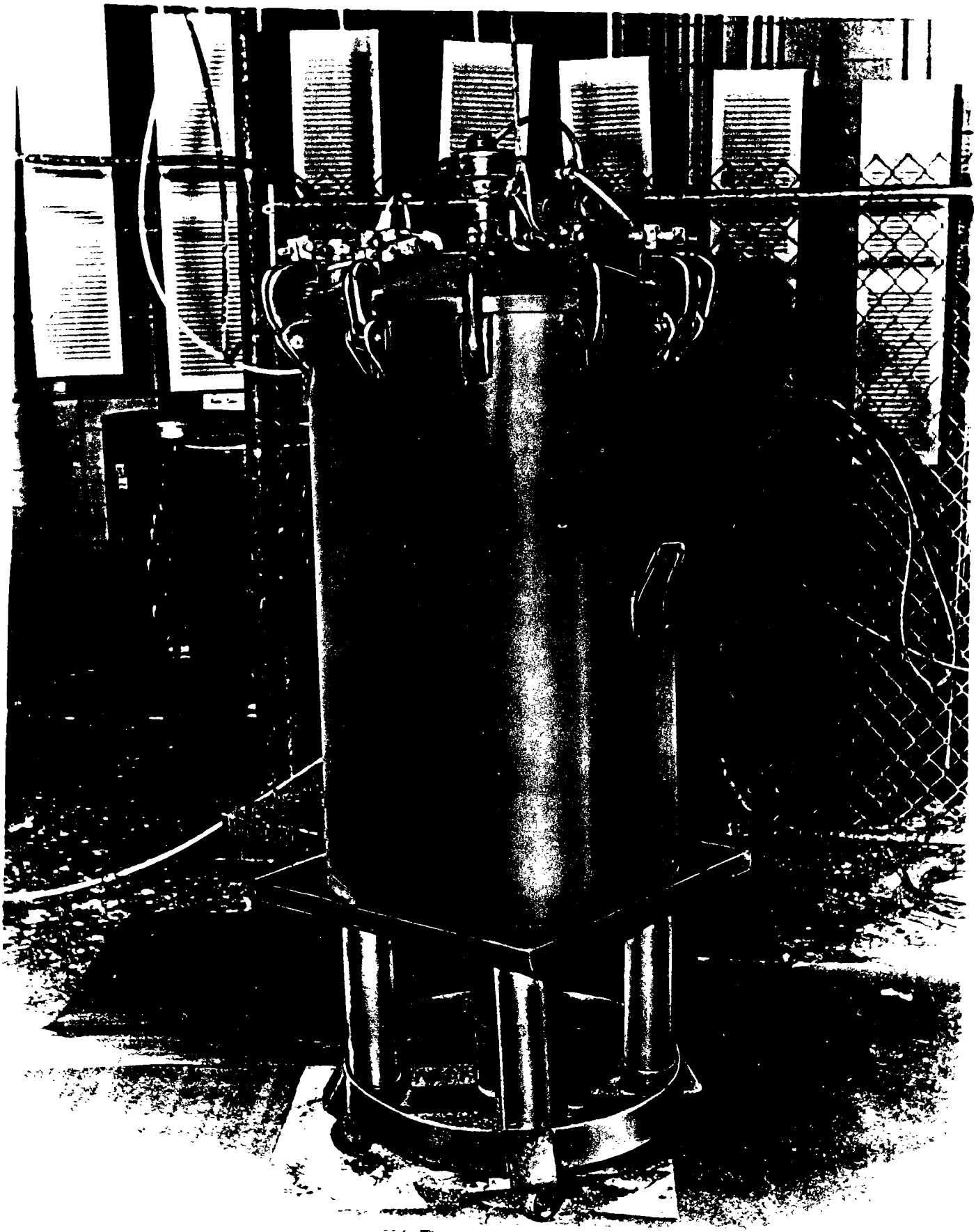

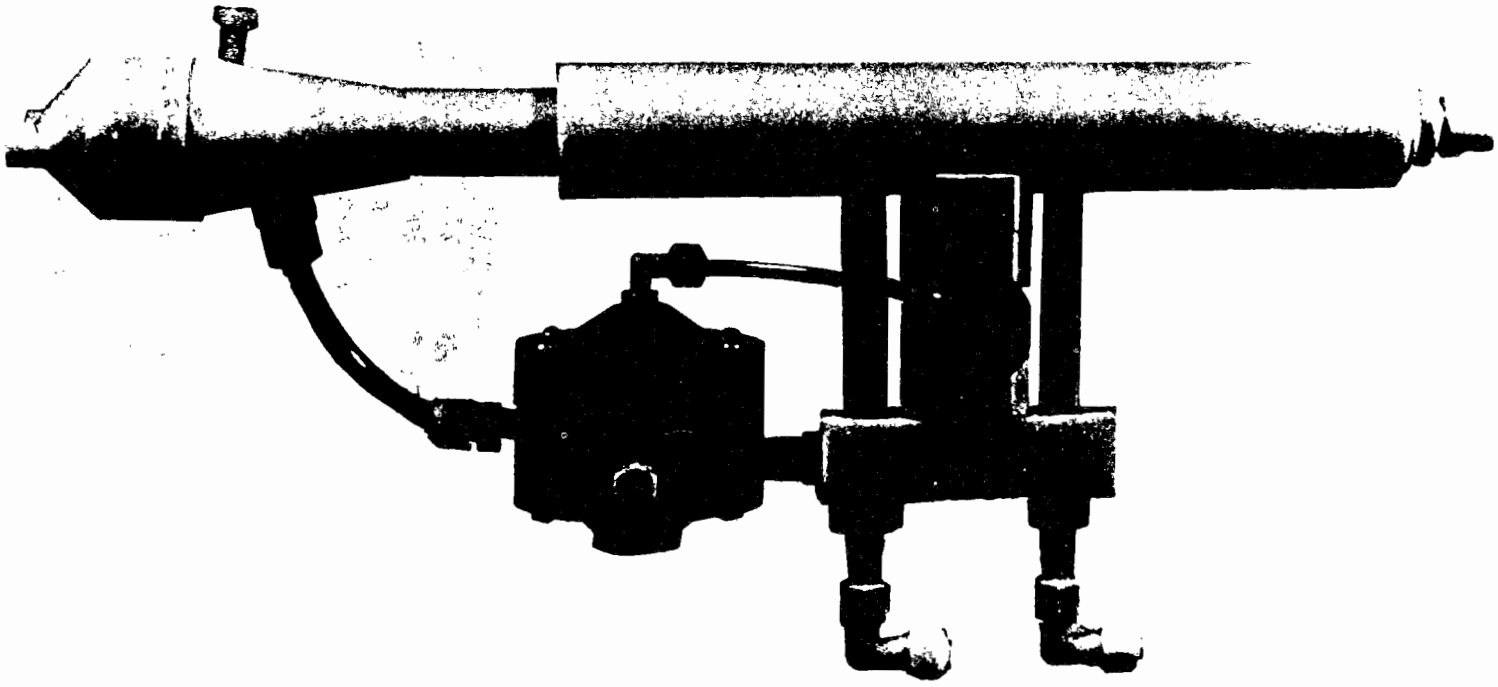

PHOTO #4

WALBERG #475 FLUID REGULATOR

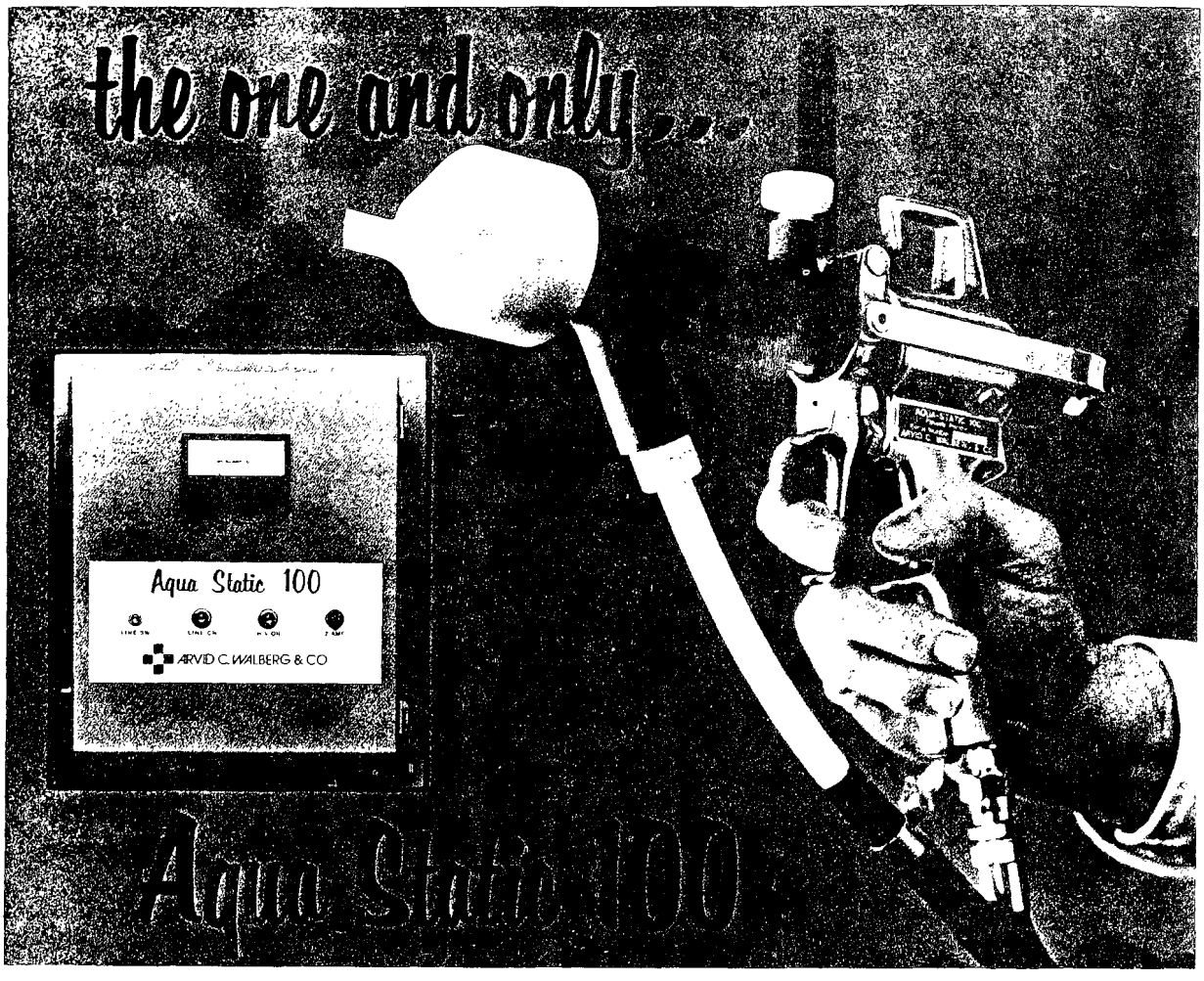

Patented, NEW design of this handgun permits charging of water-base paints in the gun itself and eliminates the awkwardness of heavy high-voltage cables.

The Aqua-Static 100 is **not** a converted or modified version of a solvent-base gun. Designed especially for water-base coatings.

NOW AN ELECTROSTATIC HANDGUN MADE ESPECIALLY FOR WATER-BASE PAINTS

This gun with its superior "conical film atomization" improves electrostatic efficiency.

Savings up to 50% compared to conventional equipment.

Meets all OSHA and EPA standards. Helps to eliminate air pollution and fire hazards.

Patents — 3746253, 3774844, other patents pending.

NEW from:

ARVID C. WALBERG & CO.

2741 CURTISS STREET
DOWNERS GROVE, ILLINOIS 60515
(312) 852-5450

the Aqua-Static 100 the best there is!

ELECTROSTATIC CONSULTANTS CO.
P.O. BOX 1587 / LISLE, ILLINOIS 60532
PHONE (708) 668-5027

ENVIRONMENTAL COMPARISONS
FOR
LIQUID COATINGS

Conventional Solvent Base Paint (6 Gallons per hour, one sprayer)
Conventional Air Gun at 25% Transfer Efficiency

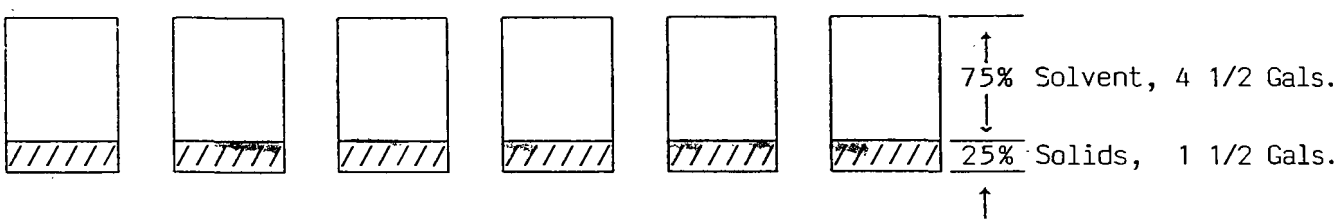

Good Electrostatic Spray System (Cuts Paint Consumption in Half)

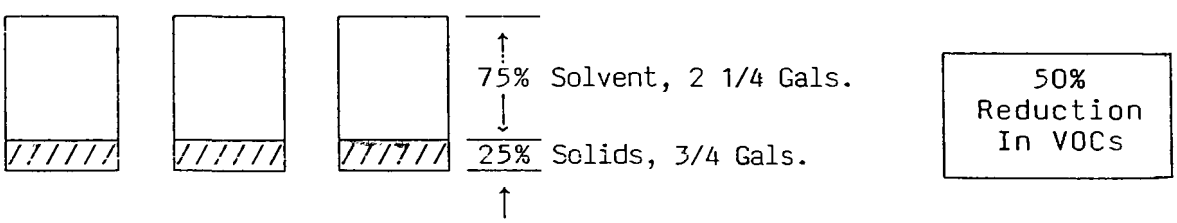

Switch to High Solids or Waterborne Paint (1 Gallon with 75% Volume Solids Less Water) with Auto-Static 400 Electrostatic System (HVLP). Meets all environmental requirements.

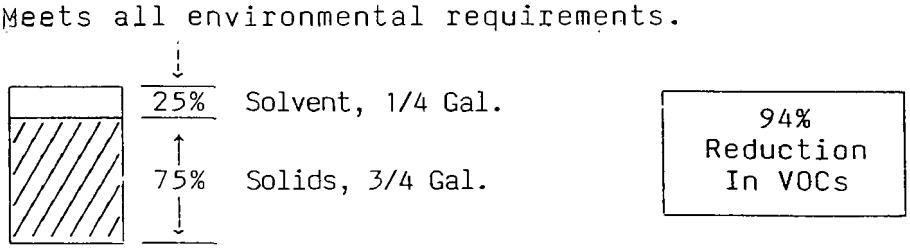

Switching to waterborne powder slurries with Auto-Static 400 system can reduce emissions by 100%.

research
engineer -ing
design

ELECTROSTATIC CONSULTANTS CO.

P.O BOX 1587 / LISLE, ILLINOIS 60532

PHONE (708) 668-5027

NEWS RELEASE

The Electrostatic Consultants Co. announces an enormous improvement in electrostatic powder coatings equipment. By combining its Auto-Static 400 automatic electrostatic spray painting system with powder slurries, its gains the best of both worlds! Here's how it works:

TRANSFER EFFICIENCY

The powder is applied as a liquid in a water slurry form. By greatly boosting the first pass transfer efficiency, the need for reclaiming and reusing the overspray is eliminated. The cost per square foot of surface coated is reduced by 50% or more. The Auto-Static 400 guns operate at a higher output voltage and are the only HVLP air electrostatic guns on the market. The atomizing air at the air cap is well below 10 PSI air pressure and does not sacrifice transfer efficiency, quality of finish or production speed.

QUALITY OF FINISH

A powder can be ground much finer if used in the form of a water slurry. The dry powder particles are quite large and normally ground into a 25 to 40 micron range (1.0 to 1.6 mils). Smaller particles tend to cake and pack in dry form and become very difficult to handle. Since quality of finish is inversely proportional to particle size, powder slurries permit a much finer grind and will provide a much higher quality of finish. Powder can now achieve an

automobile type finish.

APPLIED FILM THICKNESS

The large particle size of dry powder (1.0 to 1.6 mils) causes the application of excessive film thickness. It is obviously impossible to reduce film thickness to 1.0 mils if you apply 1.6 mil particles of 100% solids material. Keep in mind that the powder is applied more than one layer thick. Remember that the cost of a paint film is directly proportional to its thickness. A powder slurry can be applied to half the film thickness and cuts costs by 50% or more.

Applied film thickness can be held within 0.1 mil (0.0001") of the desired thickness over an entire work surface with a liquid coating. This is greater precision than can be held in the average machine shop. Film thickness is built up with multiple thin coats. It is also constant over the full height of the ware with the full-stroke reciprocators. There is no interface problem with adjacent guns coating different areas on the same work piece.

QUICK COLOR CHANGES

By eliminating the need for reclaiming and reusing overspray, the color change time can be reduced to a few seconds. This broadens the market to include those that must make numerous color changes every day. Cost savings are very high over the complicated color change techniques required with dry powder systems.

COMPUTER PROGRAMMERS

The computer programmer used with the Auto-Static 400 electrostatic system uses up to 16 electric eyes scanning the ware ahead of the electrostatic system. It programs itself to suit the configuration of products passing on the conveyor line. Products up to 16 different vertical dimensions and an infinite number of

horizontal dimensions can be mixed together on the line and sprayed to suit.

FIRE SAFETY

Powder slurries eliminate the fire hazard normally associated with either dry powder or solvent base coating systems. The water in the coating prevents ignition with an open flame. The water apparently prevents the temperature from rising to the ignition point. The codes that cover "Spray Application Using Flammable and Combustible Materials" no longer apply. Insurance costs will be greatly reduced. The fire safety of a production plant is greatly improved.

FLEXIBILITY

All of the flexibility of the Auto-Static 400 liquid coating system is retained. Waste caused by spraying at large open areas is avoided. Four spray guns on each of two full-stroke reciprocators are aimed on eight different compound angles to assure more complete coverage on every work piece. This eliminates manual touch-up on most products. The normal Faraday Cage effect expected with other electrostatic equipment is overcome. Paint and labor costs are reduced to a minimum.

The same electrostatic system will apply all three environmental coatings with equal ease. This includes waterbornes, high solids (up to 80% volume solids) and powder. It is unnecessary for a user to make a long term commitment to one type of coating or another.

CLEAR-AIRE SPRAY BOOTHS

Clear-Aire spray booths are normally furnished with the Auto-Static 400 electrostatic coating system as shown in attached Drawing No. 1800. These booths use a roll-up filter material that changes itself automatically as needed about 6" at a time. This

assures uniform ventilation all day long.

The high collection efficiency of the filter material stops all particulate emissions from exhaust stacks. Some of these booths have operated with high solids coatings for 5 to 7 years without requiring cleaning of exhaust plenums, stacks or fans.

The thorough filtering action permits recycling 80% of the exhaust air back into the spray booth. This cuts the heating bill for exhaust air by $5000 for a 10' high booths per year in Northern Illinois. This is with a single shift operation. They also cut the size and cost of make-up units needed on new installations.

As indicated above, the national codes covering "Spray Application Using Flammable and Combustible Materials" no longer apply if waterborne paint or water slurries of powder are applied.

The 80% recycling spray booth is designed to provide sufficient ventilation to stay below 25% of the LFL (Lower Flammable Limit) when conventional solvent base paint is used at the full production capacity of 100 square feet of surface coated per minute. This is also assuming 25% solids and 75% solvent in the paint. The LFL is further reduced by 94% when switching to a 75% volume solids environmental paint. At the same production capacity, the vapor concentration is reduced to 1.5% of the LEL.

Since there is no solvent vapor produced in dry powder, systems safety is computed in a different fashion. Powder concentration shall not exceed 50% of the MEC (Minimum Explosive Concentration). This is defined as a dry powder concentraion below 0.015 oz per cu.ft. of exhaust air. By going to a water slurry, the powder becomes very safe and it is no longer covered by codes regulating "Spray Application Using Flammable and Combustible Materials". This was determined by Factory Mutual Research Corporation, Scientific Circular 804 dated 1977 covering waterborne coatings. The Clear-Aire 80% recycing automatic spray booths meet NFPA #33 code requirements and are approved by OSHA for use with the Auto-

Static 400 automatic electrostatic coating system.

ARVID C. WALBERG CMfgE

ACW/mv

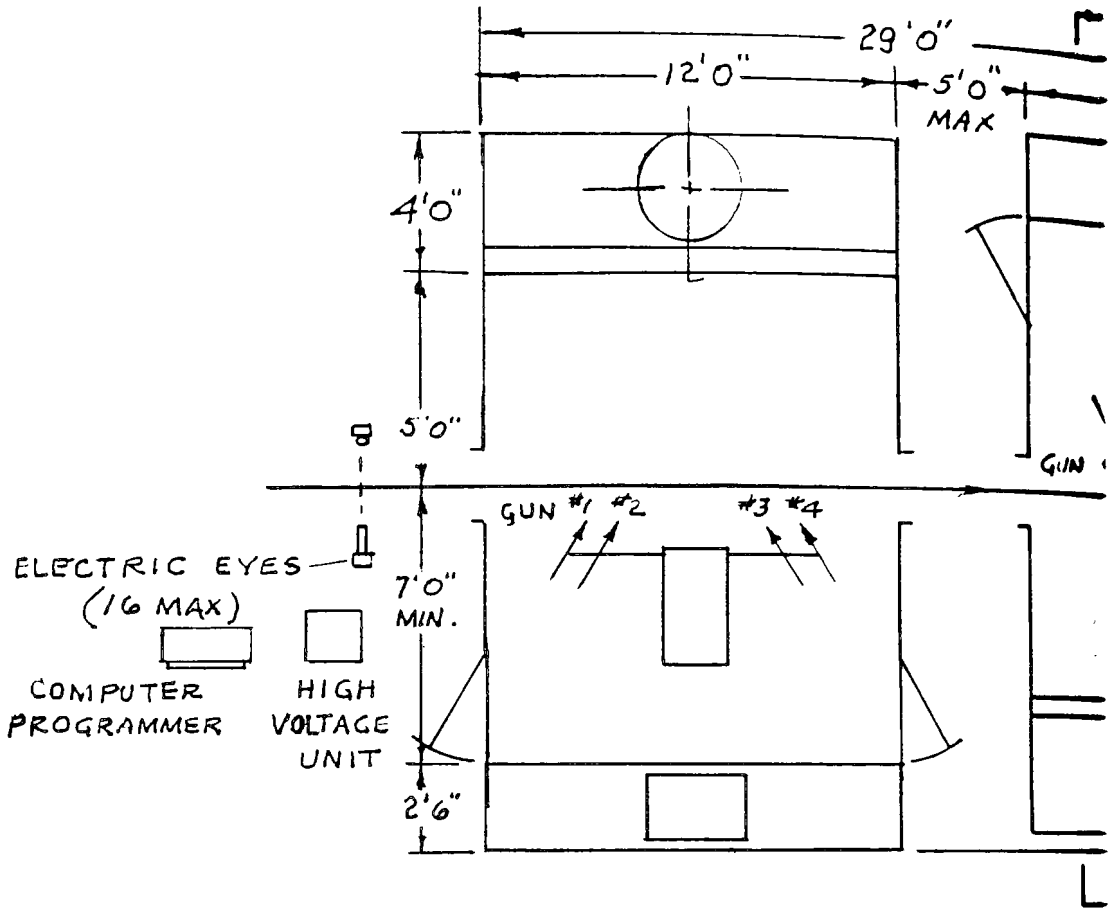

PLAN VIEW

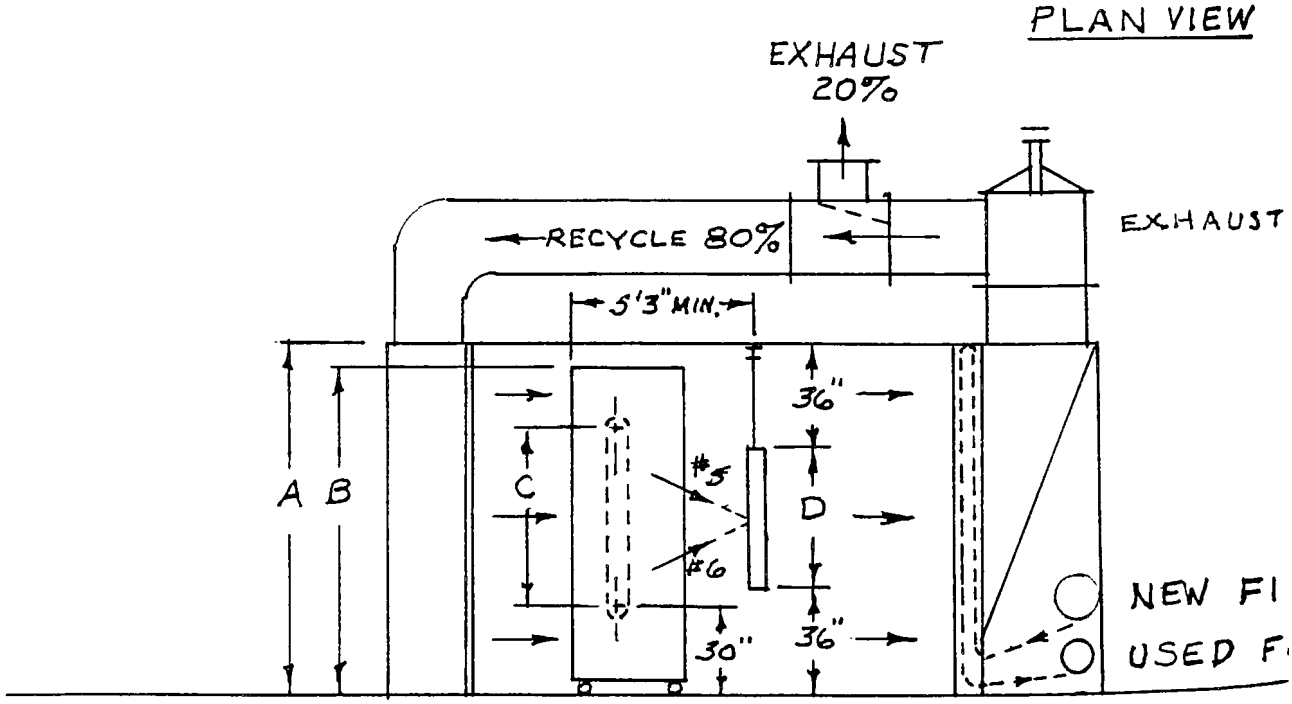

SECTION A-A

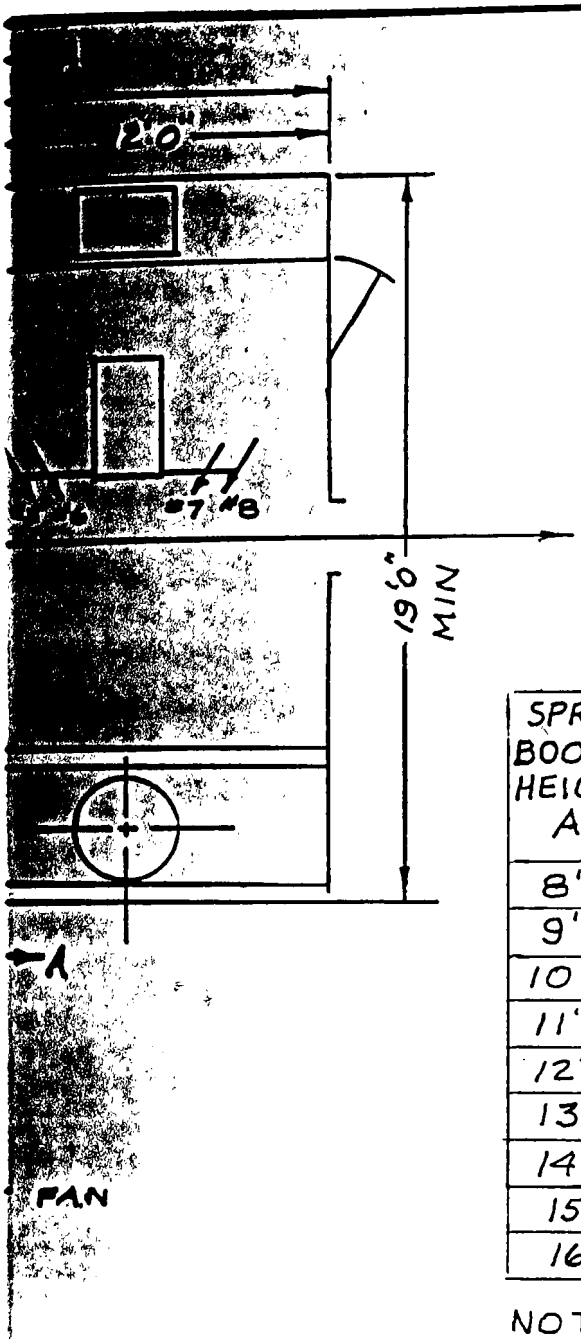

SPRAY BOOTH HEIGHT A	RECIP HEIGHT B	STROKE LENGTH C	MAX PART HEIGHT D	MAX CONVEYOR SPEED FPM	EXHAUST VOLUME 2 BOOTHS CFM
8'0"	7'0"	3'0"	2'0"	33	4800
9'0"	8'0"	4'0"	3'0"	29	5400
10'0"	9'0"	5'0"	4'0"	25	6000
11'0"	10'0"	6'0"	5'0"	20	6600
12'0"	11'0"	7'0"	6'0"	17	7200
13'0"	12'0"	8'0"	7'0"	14	7800
14'0"	13'0"	9'0"	8'0"	13	8400
15'0"	14'0"	10'0"	9'0"	11	9000
16'0"	15'0"	11'0"	10'0"	10	9600

NOTE: ALL BOOTHS 12'0" WIDE
MEETS NFPA 33 CODE AND
OSHA REQUIREMENTS.

LTER ROLL

ILTER ROLL

AUTOSTATIC 400 ELECTROSTATIC SYSTEM / 80% RECYLING AUTOROLL SPRAY BOOTHS

SCALE: NONE	APPROVED BY:	DRAWN BY acw
DATE: 4/19/90		REVISED

ACHIEVE ENVIRONMENTAL COMPLIANCE
CUT VOC EMISSIONS SAVE ENERGY

ELECTROSTATIC CONSULTANTS

DRAWING NUMBER 1800

VANTAGE® Products Corporation
AN INDUCTOTHERM COMPANY

STEEL - FAL PLASTICS 1715 DOGWOOD DR • CONYERS GA 30207 • (404) 483-0915

December 3, 1991

Mr Bruce C. Jordan
Director, Emission Standards Division (MD-13)
Office of Air Quality Planning and Standards
U. S. Environmental Protection Agency
Research Triangle Park, North Carolina 27711

Dear Mr. Jordan:

This is in response to the National Air Pollution Control Techniques Advisory Committee's (NAPCTAC's) request for comment concerning the proposed Control Techniques Guideline (CTG) for the control of volatile organic compounds (vocs) from surface coating of plastic parts. Specifically addressed is one area of the Miscellaneous Plastic Parts Category.

Vantage Products molds and paints decorative window shutters, storm doors, and other building products out of polypropylene. The material used and the conditions that the parts are subjected to do not seem to fall within the scope of the CTG discussed at the recent NAPCTAC meeting in Durham, North Carolina. The enclosed report was prepared for NAPCTAC to help make you aware of some of the unique problems encountered in our process. We hope that you will consider this material when drafting the final version of the CTG. Included in this package is a scale model of one of our louvered shutters to help you to visualize th difficulties involved in painting a shape of this complexity.

Please do not hesitate to contact us if we can provide additional information or sources of information. Thank you for your time and attention.

Sincerely,

Dale C. Jones
Finishing Department Manager
Vantage Products Corporation

(404) 922-6767 (FAX)

cc: NAPCTAC Committee Members

/enclosures

COMMENTS ON THE
CONTROL TECHNIQUES GUIDELINE
FOR THE
CONTROL OF VOLATILE ORGANIC COMPOUNDS
FROM SURFACE COATING OF PLASTIC PARTS

SUBCATEGORY:
MISCELLANEOUS PLASTIC PARTS

prepared by:

Dale C. Jones

FOR

VANTAGE PRODUCTS CORPORATION

TABLE OF CONTENTS

INTRODUCTION	PAGE 1
ADHESION PROMOTING ADDITIVES	PAGE 3
PRIME COAT / TOP COAT	PAGE 3
WATER REDUCIBLE	PAGE 3
HIGH SOLIDS	PAGE 4
RADIATION CURABLE COATINGS	PAGE 4
POWDER COATING	PAGE 4
UNICARB	PAGE 5
1,1,1-TRICHLOROETHANE	PAGE 5
MOLDED-IN COLOR	PAGE 5
CHROMATE SOLUTION TREATMENT	PAGE 7
CORONA DISCHARGE	PAGE 7
PLASMA TREATMENT	PAGE 7
FLAME TREATMENT	PAGE 7
ULTRAVIOLET TREATMENT	PAGE 7
MECHANICAL ABRASION	PAGE 8
SUPPRESSED SPARK TREATMENT	PAGE 8
MECHANICAL SYSTEMS	PAGE 8
CONCLUSION	PAGE 9
INDEX	PAGE 11

Introduction:

It has been recommended that the Control Techniques Guideline (CTG) for the coating of miscellaneous plastic parts be included as a subset of the CTG for Business Machines and Electronics. This document is intended to provide information that may be helpful in formulating the CTG for those who mold and coat polypropylene (PP) and polyethylene (PE). Because of the very low surface energy of these materials, they are extremely difficult to successfully paint. However, they are relatively inexpensive, have good mechanical properties, and are easily recyclable. There are a number of sources of recycled PP and PE, and utilizing them reduces solid waste volumes.

Our industry (the manufacture of plastic window shutters, storm doors, and other miscellaneous building products) primarily uses polypropylene, so that will be the focus of this paper. When it comes to coatings, it is generally true that what holds for polypropylene is also applicable to polyethylene. Since these products are designed for exterior application, the painted finish must have outstanding adhesion to the substrate and must have the durability to last for years without chalking, fading, loss of gloss, or other undesirable characteristics. Polypropylene parts intended for interior use only (some computer housings, office furniture, etc.) are not subjected to the same environmental extremes and so the integrity of the finish is somewhat less critical.

In theory, reducing the emission of Volatile Organic Compounds

(VOCs) can be accomplished by either lowering the VOC content of the coating or by utilizing some mechanical means of removing the VOCs from the exhaust stream. The principle of source reduction holds that it is better not to have the VOCs present to start with, so the coating alternatives will be discussed first.

There are two primary methods by which a paint film is held to a substrate; mechanical bonding and electrical bonding. Mechanical bonding takes place when the surface of the substrate is dissolved very slightly by one of the solvents in the paint. When the solvent evaporates and the surface subsequently resolidifies, the interface zone between the part and the coating is blurred. This is analogous to welding two pieces of metal together; both pieces melt at the joint, the molten metals mingle together, and when they solidify the two pieces have effectively become one. Electrical bonding, on the other hand, takes place on the molecular level. The electrical attraction between polar molecules binds the paint to the substrate. Generally speaking, this is not as effective as mechanical bonding but for some substances it is the only method that works. Polypropylene has excellent resistance to chemicals (automobile batteries and laboratory ware are often made of PP) and is unaffected by most solvents. Mechanical bonding of the paint will not happen. Unfortunately, the surface energy level of PP is very low and electrical bonding does not readily occur either. Various methods have been tried to promote adhesion, with varying degrees of success. Either the paint must contain some element that increases adhesion, or the parts must be pre-treated in some way

to increase the surface energy level.

Adhesion promoting additives:

A Chlorinated Polyolefin (CPO) additive has been used in coatings for PP quite successfully as an adhesion promoter. Eastman Chemical is one manufacturer of CPO, and supplies it in industrial quantities to formulators of coatings. The disadvantage to CPO is that no one has been able to create a stable emulsion of it with water, hence a solvent based paint is necessary. These coatings typically contain 4 1/2 lbs./gal. of VOC and up.

Prime coat/top coat

It is possible to apply a very thin prime coat of solvent based material containing CPO, followed by a topcoat of low VOC water reducible paint. Testing has shown that this system can be made to perform adequately under ideal conditions. Unfortunately, the combined VOC content of the prime coat and the water reducible top coat can be equal to that of one coat of solvent based paint. Also, if any areas of the part are missed by the prime coat the paint will fail to adhere in those areas when exposed to exterior conditions. It would probably be impossible to detect this defect until parts started failing in the field.

Water reducible:

As noted above, a water based paint that combines the necessary attributes of adhesion to PP and durability has not been developed. The market for such a specialty coating is very small, and there is little incentive for the major coatings

manufacturers to spend a great deal of lab time on such a project.

High solids:

High solids paints are subject to roughly the same limitations imposed by CPO as water reducible ones. The solvent (hence VOC) content of the coating must be high enough to maintain a stable solution. Thirty five to forty percent volume solids appears to be the upper limit.

Radiation curable coatings

Radiation curable coatings can often be formulated with no VOC content whatsoever. They rely on the energy supplied by non-ionizing electromagnetic radiation (often ultraviolet light) to promote crosslinking of the polymer chains in the resin system. This method of "drying" does not rely on either solvent evaporation or auto-oxidative chemical reactions. The two problems associated with radiation curable coatings that would affect our industry are the inability of the radiation to penetrate some opaque colors, and the difficulty/impossibility of focusing the radiation on randomly shaped three-dimensional objects.

Powder coating:

Powder coating is another non-VOC finish that is used extensively in the coating of metal parts. The temperatures and time of exposure to such temperatures required to cure the parts makes it unsuited for use with most thermoformed plastics, including PP.

Unicarb:

Still in its experimental stages is the Unicarb system invented by Union Carbide. It relies on the ability of carbon dioxide to become supercritical at moderate temperatures and pressures. A supercritical substance exhibits some of the properties of a liquid and a gas simultaneously, and it can be used to dilute a very viscous coating without the use of additional solvents. The process involves the use of equipment that, for the most part, hasn't been developed yet. There is at least one pilot plant in North Carolina working on coating furniture, but the indications are that this technology is still years away from becoming viable.

1,1,1-trichloroethane:

There have been some solvents that are not considered VOCs, most notably 1,1,1 trichloroethane. It was not thought to initiate smog-causing chemical reactions, and so was exempted from VOC regulations by many states. Recent evidence suggests that it is a large factor in ozone depletion in the upper atmosphere, and its use is being phased out over the next several years. No safe substitute for its use in paint has been developed yet.

Molded-in color:

Finally, there may be products that could be molded in the appropriate color instead of painted. Unfortunately, PP tends to degrade when exposed to the ultraviolet component of sunlight unless protected by a coat of paint. There are additives that will stabilize PP against such degradation, but they are far more expensive than painting. Using such additives in recycled PP is

not recommended by any of the manufacturers, since there is no way of knowing precisely what is in the plastic and what effect these stabilizers might have. In addition, one of the most important benefits of our shutters and storm doors is that the customer can paint over the original coating with any good quality exterior house paint. They would not be able to do this if the part was purchased with the color molded in, as there is no paint that we are aware of available on the retail level that will adhere to PP.

To date, technology has not yielded a coating for polypropylene that provides the necessary performance qualities and also a low VOC content. The closest approach that we are aware of has 3 1/2 lbs./gal. of VOC (after subtracting exempt solvents) and is formulated with 1,1,1-trichloroethane. Since this appears to be an environmentaly unfriendly solution, it will not be available for long. The alternative to including adhesion promoters in the coating is to pretreat the surface of the part in some way to raise energy levels to the point where existing coatings will adhere. The traditional ways of doing this include:

1. Chromate solution treatment
2. Corona discharge
3. Plasma treatment
4. Flame treatment
5. UV treatment
6. Mechanical abrasion
7. Suppressed spark method

Chromate solution treatment:

Chromate solution treatment involves dipping the parts in a solution of 5% potassium dichromate and 95% concentrated sulfuric acid. The mixture must be replaced from time to time, and is inherently environmentaly unfriendly.

Corona discharge:

Corona discharge involves exposing the parts to an electrical halo produced by a high voltage, high frequency generator. Ozone is produced as a by-product. Often used to treat webs of film, it is not suitable for three dimensional objects.

Plasma treatment:

Plasma treatment is similar to corona discharge, but also involves a vacuum chamber and the introduction of gasses, such as argon, tetrafluoromethane, and nitrogen. It is a batch process and is not compatible with a continuous assembly operation due to the slow speeds involved.

Flame treatment:

Flame treatment is the process of passing the part through an oxidizing flame to activate the surface. The main problem is lack of uniformity in treating an awkwardly shaped object. Additives in the plastic can negate the effects of the treatment.

Ultraviolet treatment:

Ultraviolet treatment is accomplished by treating the plastic with benzopherone and then exposing the surface to UV radiation. Again, the problem is treating three dimensional objects, and the

effects of additives in the plastic.

Mechanical abrasion:

Mechanical abrasion is done with sandpaper or abrasive blasting. The reliability factor is low, and the same problems with three dimensional parts and additives are encountered.

Suppressed spark treatment:

Suppressed spark treatment involves conveying the parts to be treated through a dielectric tunnel containing a high energy electric field. The resulting discharge creates a corona effect, and is similar in application to the corona discharge method. Ozone is created as a by-product. The limitations include speed of treatment and the composition of any additives that might be in the plastic. The parts must also be meticulously cleaned.

The systems that might be applicable to our products and processes include flame treatment, mechanical abrasion, and suppressed spark. We have performed extensive testing using these methods in conjunction with a wide variety of low VOC water reducible coatings, and have been unable to produce acceptable results. None of the above reliably or consistently treated all of the required surfaces of the parts, and accelerated weathering tests showed consistent failures. The equipment and paint manufacturers agreed that some of the problem is due to the complex shape of the parts, and some is probably due to unknown (and unpredictable) additives and mold release agents present in the recycled and reprocessed polypropylene materials used.

Mechanical systems:

Since no viable alternatives presently exist for VOC reduction through coatings technology, abatement equipment was studied. A total of sixty four manufacturers of systems designed to remove VOCs from an exhaust stream were contacted and asked to submit proposals for the installation of their systems. Installed purchase price, yearly maintenance costs, and power consumption figures were requested. Quotes were received for carbon adsorption units (both steam and nitrogen stripped), thermal oxidation (recuperative and regenerative), catalytic oxidation, and refrigeration systems (liquid nitrogen, Rankine cycle, and Brayton cycle) to condense VOCs from the exhaust stream. Refrigeration was quickly discounted as an option. Based on 36,000 CFM of exhaust and a loading of 81 lbs./hr. of toluene (for an equivalent vapor partial pressure of 0.132 mm Hg), a temperature of (-140 degrees F.) would be necessary to reduce the volume percent of toluene to approximately 7 ppm. The operating costs alone would be prohibitive. The other systems averaged about $1,000,000 to purchase and install, with operating costs projected to be in excess of $50,000 per year. A capital expense such as this is beyond the ability of many small companies to manage and remain competitive.

Conclusion:

In summary, we have determined the following:

1. The technology does not yet exist to produce a truly low VOC coating for polypropylene that combines the requisite adhesion and durability under naturally occurring conditions of

environmental stress.

2. Pretreatment of the parts to maximize adhesion of existing coatings is not reliable enough or effective enough to be a viable option.

3. Mechanical systems to remove VOCs from the exhaust stream exist, but are priced beyond the reach of smaller companies.

Manufacturers of polypropylene building materials must represent a very small percentage of all of the coaters of plastic parts, but to require the same controls as recommended for manufacturers of computer housings or toys would not be fair; it could in fact have a crippling effects on our industry. We would welcome the opportunity to review the Control Technology Guideline before its final promulgation, and would be happy to supply any additional information that might be of use to the NAPCTAC committee.

Sincerely,

Dale C. Jones
Finishing Department Manager
Vantage Products Corporation

c.c. NAPCTAC Committee Members

INDEX

Abatement, 9
Abrasion, 6, 8
Acid, 7
Additives, 3, 5, 7, 8
Adhesion, 1, 2, 3, 6, 9
Adsorption, 9
Argon, 7
Atmosphere, 5
Auto-oxidative, 4

Benzopherone, 7
Bonding, 2
Brayton, 9
By-product, 7, 8

Carbide, 5
Carbon, 5, 9
Catalytic, 9
Chalking, 1
Chlorinated, 3
Chromate, 6, 7
Coatings, 1, 3, 4, 6, 8, 9, 10
Compounds, 1
Corona, 6, 7, 8
CPO, 3, 4
Crosslinking, 4
CTG, 1

Degradation, 5
Dichromate, 7
Dielectric, 8
Dioxide, 5

Eastman, 3
Emission, 1
Emulsion, 3
Evaporation, 4

Fading, 1
Flame, 6, 7, 8
Furniture, 1, 5

Hg, 9

Manufacturers, 4, 6, 8, 9, 10

NAPCTAC, 10
Nitrogen, 7, 9
Non-ionizing, 4

Oxidation, 9
Oxidizing, 7

Ozone, 5, 7, 8

Plasma, 6, 7
Polar, 2
Potassium, 7
Powder, 4
Pretreatment, 10

Radiation, 4, 7
Rankine, 9
Recuperative, 9
Recyclable, 1
Recycled, 1, 5, 8
Reduction, 2, 9
Refrigeration, 9
Regenerative, 9

Smog-causing, 5
Solvents, 2, 5, 6
Stabilizers, 6
Sulfuric, 7
Summary, 9
Supercritical, 5

Tetrafluoromethane, 7
Toluene, 9
Trichloroethane, 5, 6

Ultraviolet, 4, 5, 7
Unicarb, 5
UV, 6, 7

L/I
12/14/91

MOTOR VEHICLE MANUFACTURERS ASSOCIATION
of the United States, Inc.

7430 SECOND AVENUE, SUITE 300 • DETROIT, MICHIGAN 48202 • AREA 313-872-4311
TLX NO. 1009770 AUTOMAKERS DET. • FAX NO. 313-872-5400

Thomas H. Hanna
President & Chief Executive Officer

December 11, 1991

Mr. Bruce C. Jordan
Director, Emission Standards Division
U.S. Environmental Protection Agency
Office of Air Quality Planning and Standards
Research Triangle Park, North Carolina 27711

Dear Mr. Jordan

The Motor Vehicle Manufacturers Association of the United States, Inc. made a presentation to the National Air Pollution Control Techniques Advisory Committee (NAPCTAC) meeting on November 20, 1991, commenting on the Environmental Protection Agency (EPA) draft Control Technique Guidelines (CTG) on plastic parts painting. We were pleased to find that some of our concerns were already being addressed by EPA and we hope that our comments will be seriously considered.

Enclosed is a copy of the text that is a companion to the presentation which provides much more detail than the outline used in the presentation.

At the suggestion of Mary Jane Clark, we are forwarding a copy of this document directly to each of the members of NAPCTAC.

Sincerely,

Eugene A. Praschan
Manager, Emissions and Control

cc: NAPCTAC Members
James Berry EPA
Robert Nelson NPCA

MEMBERS:

CHRYSLER CORPORATION • FORD MOTOR COMPANY • GENERAL MOTORS CORPORATION • HONDA OF AMERICA MFG., INC.
NAVISTAR INTERNATIONAL TRANSPORTATION CORP. • PACCAR Inc • VOLVO NORTH AMERICA CORPORATION

COMMENTS TO UNITED STATES ENVIRONMENTAL PROTECTION AGENCY'S NATIONAL AIR POLLUTION CONTROL TECHNIQUES ADVISORY COMMITTEE

REVIEW OF OCTOBER 1, 1991 DRAFT SURFACE COATING OF PLASTIC PARTS CONTROL TECHNIQUES GUIDELINE

DURHAM, NORTH CAROLINA
NOVEMBER 20, 1991

mvma
Motor Vehicle Manufacturers Association
of the United States, Inc.

My name is Joseph F. Lennon, Principal Facility Environmental Control Engineer, Environmental Quality Office, Ford Motor Company. I am here to speak in behalf of Motor Vehicle Manufacturers Association of the United States, Inc. (MVMA) to address our industry's concerns with the draft Surface Coating of Plastic Parts Control Technique Guideline (CTG). MVMA is in support of the comments presented by the National Paint and Coating Association (NPCA). MVMA member companies with automobile plastic parts coating facilities located in Michigan worked with NPCA member companies and Michigan Department of Natural Resources in the four year development of Rule 632 and believe that rule represents a model for the plastic parts coating CTG for all the reasons stated in the NPCA presentation.

The MVMA comments will address concerns of importance to users of the painted plastic parts and related to the draft CTG. These concerns include the following:

- Inadequate number of coating categories
- Importance of need for compatible coatings in paint systems
- Sensitivity to time required in coating approval process
- Quality coatings to provide acceptable appearing paint finishes
- Coatings that are durable to avoid customer repainting
- Coatings that will not cause increased warranty costs
- RACT control requiring add-on controls
- Recognition of specialty coatings

Each of these concerns will be briefly addressed below. In addition, several comments specifically related to the draft CTG document will be included.

Categories of Coatings.

NPCA comments have addressed the need for additional categories of coatings for plastic parts. Much time was expended during the development of Rule 632 in an effort to determine how best to regulate the wide range of plastic/coating combinations that exist in plastic parts components for automobiles. After extensive discussion, the categories listed in Rule 632 were determined to be the best way to regulate the automobile plastic parts coating industry.

The draft CTG is significantly different from Rule 632 in that two categories have been eliminated or moved into categories that are more restrictive in VOC content. These categories are air dry coatings and unique colors (such as reds and blacks) that need allowance for higher VOC content due to technical limitations. As appropriately described in Section 3 of the draft CTG, there are a number of plastic substrates (such as acrylonitrile-butadiene-styrene, polycarbonate and polybutylene terephthalate, polycarbonate, acrylic) that limit the coatings to cure at lower temperatures (at or below 194 F). These are referred to as air dried coatings. The draft CTG ignores this important category of coatings and places them in the same category as high bake coatings. The coating formulations designed for these plastic substrates typically require higher quantities of VOC in order to allow the painted parts to retain the required performance characteristics.

The draft CTG should allow for a higher VOC content for certain color coatings such as the reds and blacks. The higher VOC emissions from red and black coatings result from chemical interactions that occur with the resins that are used in these coating colors. These issues have been addressed by the NPCA/MVMA work group which submitted a lengthy document to EPA on September 17, describing the need for the air dried coating category and for VOC content credit for red and black coatings. EPA should consider these documents before deciding on final CTG VOC content emission limits.

The VOC limits in the CTG appear not to recognize cure volatiles generated under Method 24 analysis. As footnoted in Rule 632, when Method 24 is used to determine VOC content of the coating, then the applicable VOC limit is to be increased by 0.5 pounds of VOC per gallon.

Paint Systems.

The coating of a plastic part typically requires two or more paint layers to make up a total paint system for specific plastic materials in order to achieve acceptable performance, considering both initial appearance and functional durability properties. The CTG must recognize that even though suppliers may have lower VOC primers for a given plastic substrate or lower VOC color coatings, the combination may not be compatible.

In other words, one cannot necessarily take the lowest VOC content prep-coat, primer, basecoat, clearcoat and have a paint system that will meet all the performance/appearance requirements that the coated plastic part must meet. The VOC content of the different coating categories may vary in order to design a coating system that is compatible for the needs of the plastic part being coated.

MVMA believes the CTG does not account for the fact that paint coating systems are designed using compatible coating types rather than looking at the lowest VOC content coating in each coating type and expecting them to perform as a functional coating system. MVMA does support reduction of VOC content of coatings by reformulation for RACT level control that is reasonable to achieve.

Approval process.

The automobile companies require a very extensive and time-consuming approval process for acceptable coating usage on automobiles. There are numerous criteria that coatings must meet to be approved for use on the product. Some of the approval tests are very lengthy in time (such as exposure to sun tests, salt tests, etc.).

Rule 632 has already driven coating suppliers to initiate research and development in reformulation of coatings to meet the lower VOC content coating limitations contained in the Rule. Coatings that have been developed as a result of that research are currently in different phases of the approval process. The VOC content values listed in Table 5-1, Level 1 control would require the suppliers to go back and incur additional costs for research and development to reformulate coatings

which are already reaching their limits to achieve the lowest VOC content for an approvable coating. In addition, the approval process would have to begin anew for any new coatings that may result from the reformulation to a lower VOC content.

MVMA believes the VOC content values in Table 5-1, Level 1 would require duplication in time and costs for both the research and development and the approval process efforts that have been underway to meet Rule 632 VOC content limits. This could jeopardize the availability of having approved coatings for production.

Quality.

The automobile industry competes in the world market place. Foreign built automobiles have placed great pressure on the domestic automobile manufacturers to be competitive on initial appearance and quality of the paint finish. One of the major indications of quality that a customer sees when he first views a car in a dealer showroom is the appearance and condition of the paint finish. The paint quality must meet customer expectations! Obviously, it is critical that the appearance of the metal and plastic parts match each other. Coatings that are reformulated to meet RACT values in this country must be developed to avoid inferior quality characteristics. MVMA is concerned that reformulated coatings to achieve the VOC content values included in Table 5-1, Level 1 control may fail to provide adequate perceived quality paint finish on the automobile.

Durability.

The durability of the automobile paint is expected to withstand the washing, waxing, weather elements, etc. for a time period of at least 7-10 years. Paint durability of plastic parts must withstand normal owner maintenance practices while retaining color-match between plastic and metal components and acceptable paint appearance. If the draft CTG were to lead to the premature use of paint that does not meet durability requirements, then repainting may be necessary. Obviously repainting results in more overall VOC emissions than would occur with an initial but durable paint application. The need to repaint the automobile could cause the customer to avoid purchase of that vehicle nameplate in the future. MVMA believes paint durability could be adversely affected as a result of reformulated coatings to a lower VOC content.

Warranty.

Warranty complaints are a major concern to the automobile companies. Warranty issues can be a costly problem in terms of customer loyalty as well as financial considerations. Reformulation of coatings that are already on the cutting edge of technology in order to meet Rule 632 VOC content levels may lead to an increase in warranty complaints and subsequent loss of customers. MVMA believes warranty complaints would increase with reformulated coatings to meet the VOC content limits proposed in Table 5-1, Level 1 control. Further, even if the technology should become available, warranty complaints could increase because new coatings may have to be rushed into production prior to completion of all testing required for full approval.

Add-on Controls.

The VOC content limits in Rule 632 represent RACT for plastic parts painting processes. Rule 632 provides for reformulation of coatings and requires the use of advanced application equipment which, in effect, reduces the actual VOC emission rate and could result in an overall environmental impact to be equivalent to those shown in Table 5-1, Level 1. However, Table 5-1, Level 1 VOC content emission limits for exterior coatings would require add-on control technology resulting in a significant economic impact on all automobile plastic parts coatings facilities.

One of the primary objectives in the development of Rule 632 was to recognize an appropriate RACT VOC content limit for plastic parts coatings that would not require add-on control equipment, but rather a value that would result in forcing technology toward development of reformulated coatings. The reason for this approach was a recognition of the many small job shops conducting plastic parts coating operations for the automobile industry. Retrofitting add-on controls on existing coating facilities is costly and could result in forcing many smaller facilities out of business. The VOC content limits contained in Rule 632 substantially met that objective.

The draft CTG contains VOC values in Table 5-1, Level 1, that do not appear technically achievable through reformulation of the coatings. Therefore add-on controls would be the only method available to achieve these VOC content coating limits. Despite a number of technically questionable assumptions in determining the cost of add-on controls (i.e., all available VOC emissions assumed to be captured for control; assumption that normal VOC destruction efficiency for incinerator is 98%), cost per ton for VOC removal are considered to be very high for RACT control. MVMA is aware of LAER (Lowest Achievable Emission Rate) permit reviews where costs for VOC removal in the $25,000/ton range were considered excessive for the LAER source. The costs for add-on control equipment in the draft CTG (even with technically questionable VOC levels) exceed costs in some LAER permits.

Specialty Coatings.

The automobile plastic parts coating operations include a large number of specialty coatings (such as, adhesive prime, electrostatic prep, resist, stencil, texture, vacuum metalizing, gloss reducer, etc.) that are designed for unique purposes. These coatings usually consist of a high VOC content but generally are not used in large volumes and are not conducive to reformulation to lower VOC content levels. Rule 632 included an exemption for these specialty coatings. MVMA recommends that the CTG include either an exemption for these coatings as was done in Rule 632 or provide specific VOC content values that are reflective of these specialty coatings.

Additional Comments.

The following additional comments are made regarding specific concerns in the draft CTG:

- Table 3-4, pages 3-30 thru 3-41. The transfer efficiency (TE) for high volume, low pressure (HVLP) applicators is assumed to be 50%. MVMA test data shows that this value is too high. Obviously TE is contingent on many factors including part design but test data for coating

bumpers with HVLP's show about a 32% TE. Page 3-42 of the CTG states that HVLP's and electrostatic applicators yield 50% without any basis or explanation for that value. The test data from the same bumper coating operation which combines the use of HVLP's and electrostatic applicators demonstrated an overall TE of about 32%.

- Section 5.1.1. This section states that there are three points of VOC emissions in the coating of plastic parts (spray booth, flash-off areas and curing oven). However, there are other related sources of VOC emissions from automobile coating operations - such as, the water pits, paint supply tanks and building vents. Future tests are expected to lead to a greater knowledge of the VOC emission points encountered during the coating of plastic parts. It is inappropriate for the CTG to use the assumption that 100% of the VOC available in a plastic parts coating operation is captured for control purposes.

- Section 7.3.2. MVMA recommends that in operations where both plastic and metal parts are being coated, the least restrictive coating limitations should apply.

- Section 7.8.3. The last sentence in this section suggests performance tests may be required every "6 months or quarterly". This is unreasonable, impractical and costly. MVMA recommends that performance tests may be conducted after major breakdowns or where significant portions of the control equipment have been replaced.

This concludes the MVMA comments.

1.0 U.S. ENVIRONMENTAL PROTECTION AGENCY'S PRESENTATION ON THE OFFSET LITHOGRAPHIC PRINTING CONTROL TECHNIQUES GUIDELINE

1.1 PRESENTATION

INTRODUCTORY REMARKS

My name is Donna Lee Jones. I am with Radian Corporation, the contractor on the Offset Lithographic Printing Control Techniques Guideline. I would also like to introduce Karen Catlett, the EPA Work Assignment Manager on this project.

INTRODUCTION TO THE CTG

(Slide 1)

In the next few minutes I will present to you a description of the offset lithographic printing industry, the sources of VOC emissions and possible control strategies, and the results of EPA's regulatory analysis.

(Slide 2)

It may be possible to characterize the graphic arts industry into 5 types of printing, of which offset lithographic printing is one. The printing types can be characterized in the following ways:

(1) Rotogravure has recessed images.

(2) Flexography and letterpress have raised letter/images.

(3) Offset lithography has chemically differentiated image and non-image areas.

(4) All printing types use direct printing except offset lithography, which uses indirect printing.

In offset lithography, the letters or images are not raised or depressed surfaces, but are chemically differentiated so that the image area is oil-receptive and accepts the oil-based inks and the non-image area is water-receptive and does not accept the inks.

The CTG and this presentation will only address offset lithographic printing.

There is currently a New Source Performance Standards for publication rotogravure and a CTG for graphic arts (rotogravure and flexography); a National Emissions Standard for Hazardous Air Pollutants for all printing types is under development.

Some example products of offset lithographic printing are items that we use everyday, such as: advertisements, business forms, cereal boxes, greeting cards, telephone directories, and newspapers. However, this list is by no means complete and these products are not limited to the offset lithographic printing process only.

(Slide 3)

There are 16,500 offset lithographic printing facilities in non-attainment areas that contribute 378,000 tons VOC; 1,500 of these facilities have the potential to emit over 100 tons per year.

(Slide 4)

Inks, fountain solution, and cleaning solutions are the major sources of VOC emissions in Offset Lithographic printing.

THE OFFSET LITHOGRAPHY PRINTING PROCESS

(Slide 5)

The following is a schematic of an offset lithographic printing unit, this unit is for illustration only, and is not intended to exactly replicate a true printing unit.

A unit is the smallest complete component of a printing press and can print only one color. Up to 12 units can be used in a row, and multiple colors can be printed. The substrate is usually paper or cardboard; web or sheet.

Fountain solution wets the non-image areas of the printing surfaces so that the ink stays where it is supposed to. Fountain solution is a mixture of water, non-volatile printing chemicals, and an (liquid) additive that reduces the surface tension of water so that it spreads across the printing plate surface. Isopropyl alcohol (a VOC) is the most common additive and is the source of VOC emissions in the fountain.

Heatset inks require the addition of heat, via hot-air dryers, to set. The VOC's emitted are due to the hydrocarbon oils contained in the inks. Non-heatset inks set by oxidation or adsorption without the use of heat. Most of the VOC's in non-heatset inks are retained by the substrate.

One of the issues we considered with non-heatset inks was what ultimately happens to the VOC's in the substrate. Although no VOC's are expected to be emitted in the normal handling of the products, the waste handling methods may regenerate the VOC's. We found that there were three possible outcomes for non-heatset printed material: landfill, municipal waste combustion, or recycling. Most paper goes to a landfill at the moment and only some is recycled. It has been estimated that only 7 percent of paper products go to a municipal waste combustor. We have considered the "ultimate fate" of non-heatset products in these waste handling methods and have concluded that large potential sources of VOC's from these waste handling methods will be controlled and therefore we have not addressed this issue in the CTG.

Cleaners are used to clean printing surfaces, ink, and fountain rollers and press exterior surfaces. Most traditional cleaning products are 100 percent VOC.

MODEL PLANTS

(Slide 6)

Based on these printing characteristics we have divided the industry into four segments (heatset web, non-heatset web (non-newspaper), non-heatset sheet, newspaper (non-heatset web)), according to the distinguishing features that I have just mentioned:

- Whether the press uses dryers (heatset) or not (non-heatset);
- The type of substrate: sheet-fed (sheet feed) or web (web substrate); and
- Newspaper (nonheatset-web) printers were placed in a separate industry segment since the newspaper printing process does not use alcohol.

Emissions of VOC's are from inks (due to hydrocarbon oils), fountain solutions (due to alcohol), and cleaning solutions (due to the solvents).

At least four facility sizes were used for each industry segment for a total of 18 model plants in each of the four industry segments.

EMISSION CONTRIBUTIONS

(Slide 7)

Using the model plants, the relative VOC emissions of each industry segment were calculated to demonstrate the potential emissions of one plant. This analysis does not take into account the number of plants in each segment of the industry.

This table shows the emissions of large uncontrolled model plants in each industry segment relative to each other. Non-heatset sheet ink emissions were set equal to 1, for comparison purposes only.

For instance, the VOC emissions from the fountain solution in the non-heatset sheet model plant are 100 times the ink emissions.

For ink emissions, heatset web, as expected, has the highest potential emissions.

For the fountain solution, the web processes have the highest amount of emissions. The emissions in the web processes are greater than any other source from the fountain solution and are greater than the total emissions of the other two industry segments.

Cleaners are the second largest source of emissions in all but one of the segments (heatset web).

The next slide shows how the distribution facility sizes and number of facilities effects the emissions profile.

(Slide 8)

We used the model plants to estimate the baseline VOC emissions in non-attainment areas. These estimates were obtained by multiplying the emissions of a particular size model plant by the number of facilities of this size estimated to be in non-attainment areas from industry surveys and population data.

In this estimate we have taken into account add-on controls used in the heatset industry and the use of alcohol replacements in all industry segments, including the newspaper industry.

From this we learned that approximately 2/3 of the emissions are from web and less than 1/3 from sheet-fed, with newspaper contributing less than 1 percent of the total.

This slide differs from the previous slide because it takes into account the size distribution of facilities of each industry segment within non-attainment areas.

CONTROL OPTIONS - INKS

(Slide 9)

We looked into the control of VOC emissions from the inks, fountain solutions, and cleaning solutions. First I will talk about the inks. We investigated the methods of controlling VOC emissions from a dryer exhaust where heatset inks are used.

Incinerators (both thermal and catalytic) were one option; these devices are designed to achieved 98 percent control.

Another method of control is condenser filters, which are devices that use room air to cool and condense the hot exhaust vapors into droplets that are filtered from the exhaust stream. This type of control can achieve 90 percent control.

To increase the amount of control from 90 to 95 percent, an activated carbon bed may be added to condenser filters. When activated carbon is used, the residual emissions from the condenser filter are collected in the carbon bed, which can be regenerated with steam or hot air.

Since the ink needs to be water-repellent, water soluble inks were not an option we considered. Reformulation to lower VOC inks does not produce significant VOC reductions, since, as discussed earlier, the majority of the VOC is retained by the substrate.

(Slide 10)

We have estimated the annual costs of these options for the model plants. Shown here are the largest and smallest model plants for the heatset web industry. Reductions range from 22.2 to 24.2 tons per year for very small facilities; 178 to

193.8 tons per year for large. The percentage of VOC's reduced range from 90 to 98 percent. The costs range from $50,000 to $73,000 for very small facilities; and from $230 to 336,000 for large plants. The cost-effectiveness of the controls ranges from a low of $1,300 for every ton of VOC removed per year for large facilities to $3,000 per ton for very small facilities.
(Slide 11)

The EPA staff recommendations for control are 95 percent. All staff recommendations have not been through final review by the EPA. The rationale for choosing 95 percent, is that this level gives a high degree of control while allowing for flexibility in control options (three).

One of the available options that is particularly desirable is a condenser filter with carbon, since these devices do not generate nitrous oxides and the recovered VOC's can be used as a fuel for the dryer.

Add-on controls are already being used by over 60 percent of the heatset facilities (incinerators = 48 percent and condenser filters = 13 percent). This information came from a 1990 web offset survey.

CONTROL OPTIONS - FOUNTAIN SOLUTION
(Slide 12)

The options for control of VOC's from the fountain solution address the issue of alcohol use; the more alcohol that is used, the more VOC's that are emitted into the atmosphere.

Refrigerating the alcohol does help, since colder temperatures reduce the evaporation rate of alcohol.

Alcohol substitutes are available that also reduce the surface tension of water. Alcohol substitutes also have a lower volatility than alcohol and are used in smaller amounts; therefore, VOC emissions are reduced significantly when they are used.

From an uncontrolled baseline estimated to be 17 percent alcohol in the fountain solution, we considered four types of emission reduction techniques to reduce VOC emissions from the fountain solution: reduce alcohol concentration, refrigerate the

fountain solution, a combination of reduction and refrigeration, and the use of alcohol substitutes.

Many printers already have switched to alcohol substitutes to lower the exposure of their employees to the fugitive emissions of alcohol.

Although some printers feel that alcohol substitutes are less forgiving than alcohol in some situations in terms of achieving the same quality product, we have found that many facilities have achieved good quality products with training of employees, management commitment, and good press maintenance.

From surveys of the industry we found that alcohol substitutes are used successfully in all types of printing.

(Slide 13)

The emission reductions with the various options range from 41 to 93 percent for the three categories: reduce alcohol concentration, reduce and refrigerate the fountain solution, and use alcohol substitutes.

Reduction to 10 percent alcohol is estimated to be give a low of 41 percent reduction in VOC emissions from the fountain solution and the use of alcohol substitutes gives 93 percent reduction in VOC emissions, which is the highest.

Moving down the list you will notice that at one level of alcohol, e.g. 3 percent alcohol which is 82 percent control, the same level of control can be achieved with refrigeration (82 percent) but with a higher level of alcohol (6 percent).

Alcohol substitutes achieve at least 93 percent reduction, however, only when the baseline is 17 percent alcohol.

Care must be taken, however, because some, but not all, of the alcohol substitutes or non-alcohol additives contain one of the 190 hazardous air pollutants that are listed in Title I of the new CAAA.

(Slide 14)

Here are the EPA staff recommendations for the reduction of VOC emissions from the fountain solution. The required level of control will be based on whether the facility: is a newspaper facility, uses web as a substrate, is a large sheet-fed facility

(defined to have a total of 24 or more units in the entire facility), or has fewer than 24 sheet-fed units total.

Since the newspaper industry is already using non-alcohol additives, this is the level of control they need to maintain. The 93 percent control doesn't really correspond to the newspaper industry because non-alcohol additives have been used by this segment of the industry for a long time.

The recommendations for the other types of printing were based on the fact that, theoretically, alcohol substitutes can be used by all segments of the industry. But, since alcohol may be needed for some specific jobs, we have allowed the use of a small amount of alcohol for web facilities, equal to 1.6 percent alcohol, 3 percent alcohol with refrigeration or higher (i.e. alcohol substitutes).

Sheet-fed facilities are known to have a unique problem with reducing alcohol due to the fact that this process has many stops and starts and resetting of the presses, which leads to a greater need for alcohol. Therefore, we have allowed the use of more alcohol for sheet-fed facilities, equal to 3 percent alcohol.

Because the smaller sheet-fed facilities are less likely to be able to cope with the changes necessary to significantly reduce alcohol and switch to alcohol substitutes, we have allowed the other sheet-fed facilities (with less than 24 units) an even greater operational flexibility, to use a slightly higher level of alcohol than the large sheet-fed facilities, equal to 6 percent alcohol.

Through surveys of the industry we have found facilities in all these categories that are using little or no alcohol and producing quality products.

(Slide 15)

The VOC emission reductions ranged from 0.8 to 696 tons per year, for small to large model plants, respectively. For each recommendation there was one option that produced a savings due to reduction in alcohol costs.

CONTROL OPTIONS - CLEANING SOLUTION

(Slide 16)

We looked at the options for cleaning solutions and found that the lower VOC cleaners (less than 100 percent) formed two groups: 75 percent and 30 percent VOC. We looked at these two groups of competitive products that reduce the amount of VOC's in cleaners. However, when we compared the ingredients in the cleaning solution to the 190 Hazardous Air Pollutants in the new CAAA, we ruled out the 25 percent reduction level (75 percent VOC) because most of the cleaners appeared to contain one or more of the Hazardous Air Pollutants.

Therefore, the EPA staff recommendation for control of VOC's from cleaning solution is the 70 percent reduction cleaners (30 percent VOC).

(Slide 17)

The VOC emission reductions with this control ranged from 0.8 to 39 tons per year, for small to large model plants respectively. The costs ranged from $550 to $24,000 over the cost of traditional cleaners. The cost-effectiveness was $629 per ton of VOC removed.

NATIONAL IMPACT OF CONTROL RECOMMENDATIONS

(Slide 18)

Using the model plants and the estimated distribution of facilities in ozone non-attainment areas, we again calculated the potential VOC reductions from all three sources of emissions (by multiplying model plant emissions by the number of facilities in non-attainment areas times the percent uncontrolled).

There were 277 thousand tons of VOC removed by the recommended control options. This corresponds to a cost-

effectiveness of control that ranges from $55 to $650 per ton for an overall average of $250 per ton.

These costs do not include the potential savings due to reduction in alcohol costs.

IMPLEMENTATION

(Slide 19)

Implementation of these recommendations would entail compliance testing and more frequent monitoring. For the add-on controls, the compliance tests required are EPA Method 25 or 25A, as well as a record of the product used (heatset or non-heatset ink). Monitoring requirements are temperature and residence time measurements.

The fountain solution compliance requirements are a modified EPA Method 24 test for VOC content and record of the product used (alcohol or substitute). A hydrometer can be used to monitor the fountain solution with alcohol only. If the fountain solution is refrigerated, the only compliance test necessary is a temperature measurement, which can also be used for monitoring.

The cleaning solution compliance requirements are a modified EPA Method 24 test for VOC content. There are no specified measurement techniques for monitoring the cleaning solution.

CONTROL TECHNIQUES GUIDELINE

Control of Volatile Organic Emissions from Offset Lithographic Printing

NAPCTAC Meeting Presentation

November, 1991

OFFSET LITHOGRAPHIC PRINTING

Outline of Presentation

- Definitions and Description of Industry
- Sources of Emissions
- Options Analysis
  - Available Controls
  - Costs of Control for the Model Plants
  - Staff Recommendations
- National Emission Reductions and Costs

GRAPHICS ARTS INDUSTRY

- Offset Lithography
- Flexography
- Rotogravure
- Letterpress
- Screen

CONTRIBUTION OF OFFSET LITHOGRAPHIC PRINTING

- Approximately 16,500 facilities in non-attainment areas
- Approximately 378,000 tons per year of VOC's emitted in non-attainment areas
- More than 1500 facilities have the potential to emit over 100 tons per year emissions

SOURCES OF VOC EMISSIONS IN OFFSET LITHOGRAPHIC PRINTING

- Inks
- Fountain Solutions
- Cleaning Solutions

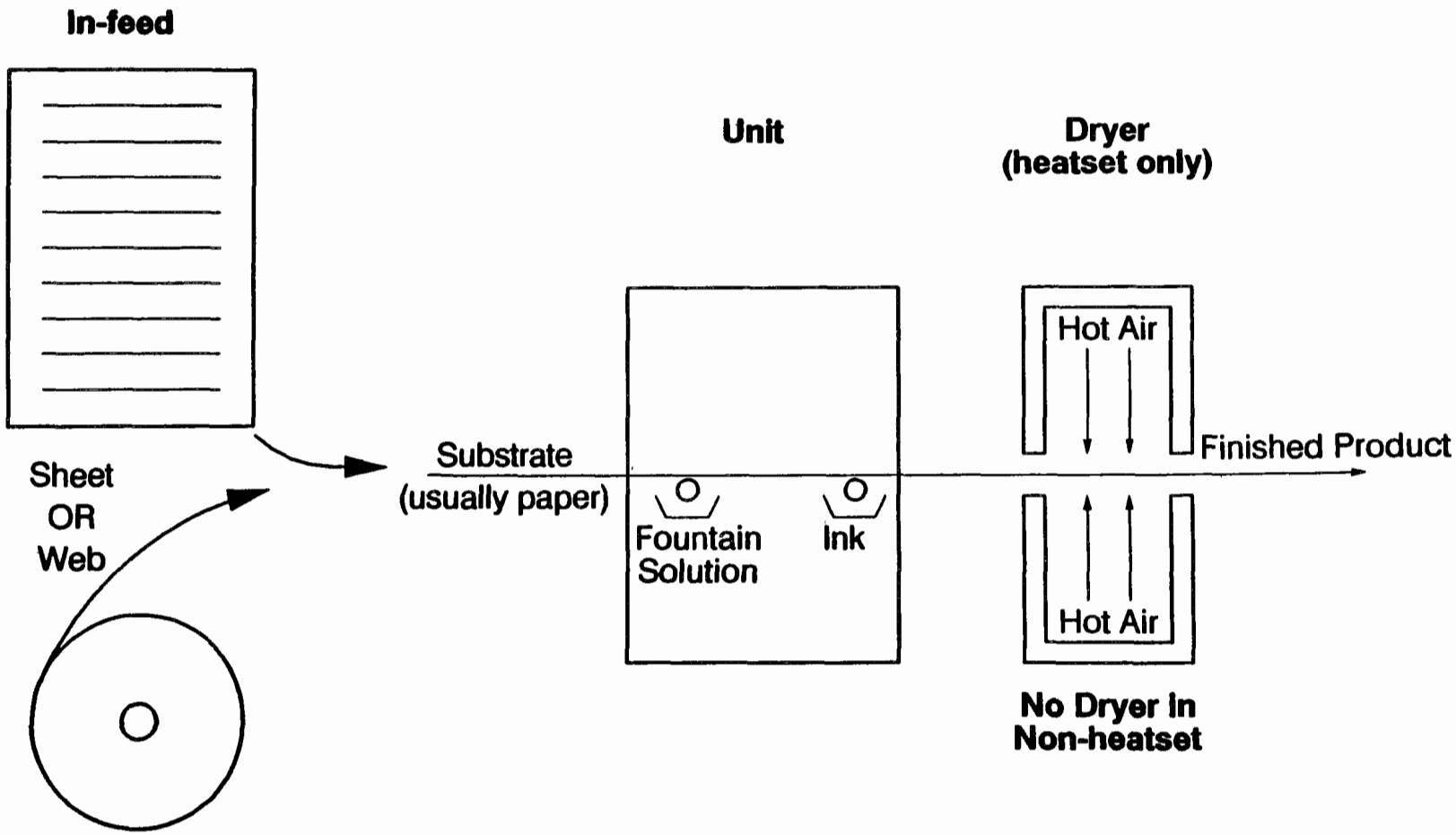

OFFSET LITHOGRAPHIC PRINTING SCHEMATIC

5516425R

OPTIONS ANALYSIS

- Four industry segments
  - Heatset Web
  - Non-heatset Web (non-newspaper)
  - Non-heatset Sheet
  - Newspaper (non-heatset web)
- Each of the three emission sources was analyzed separately
- 18 model plants were used to characterize the industry

RELATIVE VOC EMISSIONS BASED ON LARGE MODEL PLANTS

Industry	Inks	Fountain	Cleaners	Total
Heatset Web	1000	3000	100	4100
Non-heatset Web	50	4000	100	4150
Non-heatset Sheet	1	100	100	200
Newspaper	160	60	300	520

ESTIMATED NATIONAL VOC EMISSIONS IN NON-ATTAINMENT AREAS

Industry Segment	Number of Facilities in Nonattainment Areas	Baseline VOC Emissions (TPY)
Heatset Web	400	142,000
Non-heatset Web	1,000	136,000
Non-heatset Sheet	15,000	97,000
Newspaper	300	2,000
Total	**16,700**	**377,000**

Baseline Emissions = Model Plant Emissions × # Facilities in Non-attainment Areas × % uncontrolled

CONTROL OPTIONS FOR INKS

- Add-on controls to the dryer exhaust

Device	Percent Control
Incinerators (thermal and catalytic)	98
Condenser filters with activated carbon	95
Condenser filters	90

- Waterborne inks are not an option
- Reformulation was not a significant control option

COST OF CONTROL OF VOC EMISSIONS FROM INK

Model Plant	Type of Control Equipment	Reductions Tons/yr	Total Percent Reduced	Estimated Annualized Costs	Cost Effectiveness $/ton
Very Small	Incineration	24	98	$73,000	$3,000
	Condenser/Filter with Carbon	23	95	$69,000	$3,000
	Condenser/Filter	22	90	$50,000	$2,300
Large	Incineration	194	98	$336,000	$1,700
	Condenser/Filter with Carbon	188	95	$290,000	$1,500
	Condenser/Filter	178	90	$230,000	$1,300

STAFF RECOMMEDATIONS FOR INKS

- 95 percent reduction of VOC in the dryer exhaust
    - thermal incinerators
    - catalytic incinerators
    - condenser filters with carbon

OPTIONS FOR THE FOUNTAIN SOLUTION

1. Reduce alcohol concentration from an industry average of 17 percent (by volume)
2. Refrigerate fountain solution containing alcohol to below 60°F
3. Combinations of 1 and 2
4. Replace the alcohol with substitutes

FOUNTAIN SOLUTION OPTIONS

Reduce Alcohol

Alcohol Concentration	Percent VOC Reduction
10%	41
6	67
3	82
1.6	90

Refrigerate Alcohol

Alcohol Concentration	Percent VOC Reduction
17%	44
10	67
6	82
3	90

Use Alcohol Substitutes

Alcohol Concentration	Percent VOC Reduction
0%	93

STAFF RECOMMENDATIONS FOR FOUNTAIN SOLUTION

Newspaper

Use of non-alcohol additives — 93% control

Web

The equivalent of 1.6 percent VOC (by volume)

- 1.6 percent (by volume) alcohol, or
- 3 percent alcohol with refrigeration

90% control

Large Sheet-fed

The equivalent of 3 percent VOC (by volume)

- 3 percent alcohol, or
- 5 percent alcohol and refrigeration

82% control

Other Sheet-fed

The equivalent of 6 percent VOC (by volume)

- 6 percent alcohol, or
- 10 percent alcohol with refrigeration

67% control

EMISSION REDUCTIONS AND COSTS FOR FOUNTAIN SOLUTION

Emission Reductions

- 0.8 to 696 TPY for the model plants

Costs

- Savings

OPTIONS FOR CLEANING SOLUTIONS

- 25 percent VOC reduction
  - 75 Percent VOC (by weight), as used
- 70 percent VOC reduction
  - 30 Percent VOC (by weight), as used

EMISSION REDUCTIONS AND COSTS FOR CLEANING SOLUTION

Emissions Reductions

- 0.8 to 39 TPY

Incremental Costs

- $550 - $24,100 per year
- $629 per ton of VOC removed

NATIONAL IMPACT OF RECOMMENDED OPTIONS

Facility Type	Number of Facilities in Nonattainment Areas	Total VOC Emissions Removed (TPY)	Cost* Effectiveness ($/ton)
Heatset Web	400	125,000	$288
Non-heatset Web	1,000	91,000	$55
Non-heatset Sheet	15,000	60,000	$350
Newspaper	300	700	$650
Total	**16,700**	**277,000**	**$250**

*Excluding the large savings in alcohol costs

IMPLEMENTATION

Control/Emission Reduction Technology	Compliance	Monitoring
Add-on Controls	- EPA Method 25 or 25A test - Records of product used (heatset or nonheatset ink)	- Temperature - Residence time
Fountain Solution	- Modification of EPA Method 24 test for VOC content - Records of product used (alcohol or substitute)	- Hydrometer (alcohol only)
Refrigeration	- Temperature measurement	- Temperature
Cleaners	- Modification of EPA Method 24 test for VOC content	

CONTROL TECHNIQUES GUIDELINE

Control of Volatile Organic Emissions from Offset Lithographic Printing

Appendix

OFFSET LITHOGRAPHIC PRINTING

A process where the image and non-image areas are on the same plane and are chemically differentiated so that the image area is oil receptive and the non-image area is water receptive

A process that transfers the printing image to an intermediary surface, which, in turn, transfers the image to the printing substrate

EXAMPLE INDUSTRY PRODUCTS

- Advertisements
- Books
- Business Forms and Brochures
- Catalogues
- Cereal Boxes
- Greeting Cards
- Labels and Wrappers
- Maps
- Pharmaceutical Instructions
- Telephone Directories
- Newspapers

DEFINITIONS

Unit

The smallest complete component of a printing press; each unit can print only one color

Press

A printing production assembly that can be made up of one or many units to produce a finished product

TWO TYPES OF SUBSTRATES

Web

A continuous roll of paper used as the printing substrate

Sheet-fed

Printing paper that is fed to the press in individual sheets

TWO TYPES OF PRINTING

Heat-set

Printing inks that require the addition of heat to set

Non-heatset

Printing inks that are set by oxidation or adsorption without the use of heat. Most of the VOC's in non-heatset inks are retained by the substrate

ULTIMATE FATE OF NON-HEATSET INKS

- Landfill
- Municipal Waste Combustion
- Recycling

FOUNTAIN SOLUTION

- Fountain solution wets the non-image areas so that ink stays within the hydrophobic image areas
- A mixture of water, non-volatile printing chemicals, and an (liquid) additive that reduces the surface tension of water.
- Isopropyl alcohol (a VOC) is the most common additive
- Alcohol substitutes are available that replace the alcohol and reduce VOC emissions from the fountain solution.

CLEANING SOLUTION

- Used to wash printing surfaces, ink and fountain rollers, and press exterior surfaces

MODEL PLANTS AND ESTIMATED ANNUAL VOC EMISSIONS (tons per year)

Model Plant Code	Size	Total Printing Units	Ink		Fountain Solution Additive		Cleaning Solution		Total Annual VOC Emission
			Use	VOC Emissions	Use	VOC Emissions	Use	VOC Emissions	
A-I	Very Small	4 - 6	77	25	70	70	2	2	97
A-II	Small	6 - 16	170	54	153	153	5	5	213
A-III	Medium	12 - 32	340	109	306	306	11	11	426
A-IV	Large	32-48	618	198	556	556	20	2	774
B-I	Very Small	4 - 6	77	1	97	97	2	2	100
B-II	Small	6 - 16	170	3	212	212	5	5	220
B-III	Medium	12 - 32	340	5	425	425	11	11	441
B-IV	Large	32 - 48	618	9	773	773	2	2	802
C-I	Very Small	1 - 4	1	0.01	1.2	1.2	1	1	2
C-II	Small	2 - 8	2	0.02	2.3	2.3	2	2	4
C-III	Medium	8 - 24	6	0.1	7.5	7.5	8	8	16
C-IV	Large	24 - 48	13	0.2	17	17	17	17	34
D-I	Very Small	6	10	0.2	0.7	0.5	2	2	2
D-II	Small	8 - 10	48	1	3.4	2.5	5	5	9
D-III	Medium	9 - 24	138	2	10	7	8	8	17
D-IV	Medium Large	18 - 48	477	7	33	25	16	16	48
D-V	Large	40 - 96	1088	16	76	57	34	34	107
D-VI	Very Large	100 - 120	2155	32	151	113	55	55	200

NATIONAL IMPACT OF CONTROLS ON VOC EMISSIONS BASED ON MODEL PLANT ANALYSIS

Model Plant Type	Facility Size	Number of Facilities in Nonattainment Areas	Total VOC Emissions (TPY)		
			Baseline	Removed	After Control
A	I	41	2,859	2,500	359
	II	63	9,616	8,408	1,208
	III	153	40,730	40,730	5,602
	IV	152	83,628	73,519	10,109
Subtotal		409	142,435	125,157	17,278
B	I	70	2,010	1,345	666
	II	249	15,841	10,460	5,381
	III	567	71,726	47,741	23,984
	IV	204	46,896	31,226	15,669
Subtotal		1,090	136,473	90,773	45,700
C	I	6,634	14,515	9,840	4,676
	II	5,910	37,673	17,628	20,045
	III	1,301	17,960	12,167	5,793
	IV	858	26,718	19,756	6,962
Subtotal		14,703	96,867	59,391	37,476
D	I	188	427	197	229
	II	42	317	132	184
	III	19	302	109	193
	IV	10	438	115	323
	V	4	385	95	291
	VI	2	358	77	281
Subtotal		265	2,227	725	1,501
Total		**16,467**	**378,001**	**276,046**	**101,955**

TELEPHONE (708)-295-1331
FAX (708)-295-0732

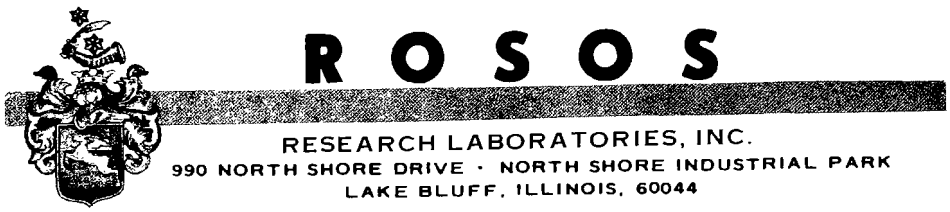

October 22, 1991

Mr. Bruce Jordan
Director
Emission Standards Division
United States Environmental Protection Agency
Office of Air Quality Planning & Standards
Research Triangle Park, NC 27711

Dear Mr. Jordan:

As president of Rosos Research Laboratories, Inc. and manufacturer of the original alcohol replacement, RV 1000, in 1970, I have the benefit of over 21 years of experience in the area of pressroom alcohol elimination. Rosos' motivation in the early 1960's to eliminate isopropyl alcohol stemmed from pressmen's complaints of headaches and nausea caused by fugitive alcohol emissions and variations in color stability and print quality relative to alcohol evaporation fluctuations. We are proud to be the pioneering proponents of alcohol elimination and in that spirit, completely support the premise of the "Offset Lithographic Printing Control Techniques Guidelines". Please permit me to compliment you and the Radian Corporation team for presenting a well researched, definitive CTG. Since public comment is solicited on page 1 2 of the draft, I feel compelled to bring several issues to your attention which unless clarified could create confusion in an industry which is anxious to comply with all federal and state Control Techniques Guidelines.

Since 1950, Rosos has specialized exclusively in fountain solutions and alcohol free dampening technology. Consequently, my remarks will be limited to this area. The first issue is one of semantics. Most printers are familiar with the terms, "alcohol replacement" or "alcohol substitute" with reference to products containing 75 - 78% butyl cellosolve or glycol ether based wetting agent. "Non alcohol additives" is a rather unfamiliar term to most printers, but one which is frequently utilized throughout the draft. This term may tend to confuse some printers who might consider non-alcohol additives to be different in chemical make up than alcohol substitutes or replacements.

On page 2 - 8 and again on page 5 7 the erroneous notion is put forth that "All of the fountain solution, including the water, evaporates after delivery to the printing plate because of the heat and work of the system on the solution; no water or alcohol are disposed of." This is true for alcohol only; water, fountain solution and wetting agents or alcohol substitutes become emulsified in the ink at whatever percent or ratio the ink is designed to pick up water. In addition, some dampening chemistry is transferred beyond the plate to the inking train, or the blanket and eventually the substrate in all offset operations. Emulsion of ink and water <u>is</u> the lithographic process.

TELEPHONE (708)-295-1331
FAX (708)-295-0732

ROSOS
RESEARCH LABORATORIES, INC.
990 NORTH SHORE DRIVE · NORTH SHORE INDUSTRIAL PARK
LAKE BLUFF, ILLINOIS, 60044

The next is the issue of failure to delineate the distinction between two step and one step alcohol elimination. Alcohol replacements or substitutes are mixed at a 0.5 - 3% or 1 - 4 ounces ratio per gallon of water and all require the addition of fountain solution at 1 2% to desensitize non-image areas of the plate. This is commonly known as the two step method of alcohol elimination. On page 3 - 40 a "one step" solution is vaguely mentioned.

As the formulator of the original one step solution and the person who coined the phrase, I would like to offer the following definition. A one step solution is a natural Sudanese Gum Arabic based formulation which incorporates 9% wetting agent (usually a member of the glycol ether group) in the concentrate product as the requisite alcohol replacement. One step solutions are recommended to be run at 3% concentrations or 0.27%, by weight, VOC's of press ready dampening chemistry on brush systems; or 4 5% concentrations on continuous dampening systems, (note the figure illustrated by page 3 - 21 or 3 - 29), or 0.36% 0.45% by weight VOC's of press ready dampening chemistry. One steps eliminate the need for 15 25% alcohol on web and sheetfed presses and are monitored by conductivity to determine concentration of fresh solution.

One step solutions offer the lowest achievable level of VOC's in press ready dampening chemistry with the exception of the latest generation of totally non-hazardous, VOC free "one step" formulations (R.O. #50, R.O. #50 D3) developed by Rosos from 1988 1991.

On page 5 - 7 a formula for calculating alcohol replacements or "non-alcohol additives" is postulated. Since no formula for one step solutions is currently provided, I would like to suggest the following:

VOC emissions from one step solutions = weight of VOC x 0.09 (or % as specified on M.S.D.S.)

On page 5 - 11 the erroneous notion that "one pound of alcohol substitute replaces approximately ten pounds of alcohol" is completely misleading.

One may say that 1% alcohol substitute is the functional equivalent of 10% alcohol in terms of reducing surface tension, but since the weight per pound of alcohol substitute and alcohol are not identical and alcohol is fugitive in the absence of refrigeration, the formula

$$\text{weight of substitute} = \frac{\text{weight of alcohol}}{10}$$

is not accurate. If only a very approximate cost comparison is required, please state that fact.

In addition, the one step solutions are not even considered in a comparison despite their successful performance for over eleven years!

TELEPHONE (708)-295-1331
FAX (708)-295-0732

ROSOS
RESEARCH LABORATORIES, INC.
990 NORTH SHORE DRIVE · NORTH SHORE INDUSTRIAL PARK
LAKE BLUFF, ILLINOIS, 60044

I would like to quote Gary Jones of GATF who approximated that a web offset heatset press could easily exceed 100 tpy VOC's. Based on that, one might estimate the following VOC comparison:

20 25% alcohol	=	71 91,000 pounds VOC's
or		
alcohol free 2 step method	=	11,000 pounds VOC's
or		
alcohol free one step method	=	2,000 pounds VOC's
or		
R.O. #50 D3	=	VOC free

On page 7 - 7, under 7.6.l., fountain solution VOC content cannot and should not be calculated by taking samples from trays or tanks. Only a freshly mixed concentration of either one step or two step solution at it's recommended concentration with printers' tap or treated water should be mixed in a control gallon to determine VOC content by total carbon analysis or gas chromatograph. Tanks and pans contain ink, blanket wash, roller wash, plate cleaner and other VOC related solvent contaminations which could distort fountain solution VOC content. This is reiterated in the appendix of the CTG Model Rule D5.

On page 7 9, 7.7.3 a statement is made that alcohol substitute can be monitored by conductivity. Alcohol substitutes are non conductors and cannot be measured either by pH or conductivity; a refractometer is required to determine concentration. One step solutions however, may be measured as freshly mixed solution by both pH and conductivity before recirculation tank contamination, but only for concentration, not VOC content. VOC content cannot be determined by any method except as percentage by weight as stated in the Material Safety Data Sheet or total carbon analysis. Mr. Gary McAllister concurs with me that Method 24 is not an accurate test for determining VOC content of aqueous solutions.

pH meters are not less sensitive than conductivity meters as stated. Fountain solution buffering may mask concentrations slightly, but again this has no relation to VOC content.

Page D-6 (sub head D.8) requires that a press operator monitor VOC content with a temperature compensated refractometer at least once per eight hour shift. A refractometer is a delicate laboratory instrument, which measures concentrations by BRIX %, not VOC's. This monitoring requirement should be reconsidered. Record keeping of daily alcohol usage or product consumption by weight of VOC's might be better source for monitoring VOC consumption. Again, conductivity cannot be used to monitor VOC content.

TELEPHONE (708)-295-1331
FAX (708)-295-0732

ROSOS
RESEARCH LABORATORIES, INC.
990 NORTH SHORE DRIVE · NORTH SHORE INDUSTRIAL PARK
LAKE BLUFF, ILLINOIS, 60044

In conclusion, the RACT as presented on page 2 - 14 is certainly achievable and will probably result in most web offset printers completely eliminating alcohol by one step or two step method since no proportioning system exists which is capable of monitoring or consistently replenishing between 1.6% - 3% alcohol. Less than 3% alcohol would probably have a negligible affect on reducing surface tension during high speed web offset operation.

Limiting smaller sheetfed operations to 6% alcohol or 10% alcohol with adequate refrigeration will probably encourage refrigeration. Limiting larger sheetfed pressrooms to less than 5% alcohol even with refrigeration will force them to make the necessary mechanical modifications, such as softer durometer dampening form and metering rollers, to facilitate minimizing alcohol consumption and compensate for some of that "forgiveness" which 25% 35% alcohol provided in the past. They too will be motivated to running alcohol free which is readily achievable with management commitment and supplier technical support. A list of sheetfed and web printers who have operated alcohol free has been provided to Heather Brown of Radian. Some of these printers have as much as twenty years experience in alcohol free operation.

Rosos commends E.P.A.'s efforts to establish CTG's which are realistic, attainable, and the only responsible means of preserving our air quality for generations to come. To answer the criticism of alcohol elimination affecting print quality or productivity, National Geographic, a publication which sets standards of excellence, has a 12 year record of alcohol free quality and productivity in its Corinth, Mississippi, web offset pressroom. Eleven million quality impressions are produced monthly to the satisfaction of both publisher and printer. It is also encouraging to note that Heidelberg/Harris, one of the world's largest press manufacturers, is demonstrating its commitment to run alcohol free with a one step solution at 4% at web offset speeds of 2000 FPM at its own Customer Support and Training Center in Nashville, Tennessee.

Rosos will continue its commitment to advancing not only alcohol free technology, but VOC free dampening chemistry for the future. R.O. #50 D3, our latest VOC free formulation, is currently being utilized by such leading printers as Holladay Tyler for Smithsonian Magazine, and divisions of R.R. Donnelley & Sons which indicates VOC free chemistry and outstanding print quality can coexist successfully. In closing, I would like to congratulate you on your CTG, and thank you for your consideration of my comments and suggestions.

Sincerely,

Agi Rosos

Agi Rosos
AR/sa

A REPORT TO

THE NATIONAL AIR POLLUTION CONTROL
TECHNIQUES ADVISORY COMMITTEE

U. S. ENVIRONMENTAL PROTECTION AGENCY

DURHAM, NORTH CAROLINA
NOVEMBER 20, 1991

PAUL L. MARTIN
C. A. ENTERPRISES, LTD.

676

I am Paul Martin, Vice President-Product Development, C. A. Enterprises, Ltd. Sioux City, Iowa.

For several years I have been involved with magnetic treatment of water used for heating and cooling in residential and commercial uses. This multi-pole magnetic treatment is a chemical free system for the control of lime scale and corrosion in all types of water using equipment....from small humidifiers to the largest of boilers, cooling towers and heat exchangers.

While there are many things that are not fully understood, it is a known fact that a properly designed multi-pole magnetic field will provide several desirable effects in water-using vessels that are designed for the transfer of heat.

By altering the configuration of the magnetic fields, by changing their strength and/or spacing, various results can be accomplished. One of these results is to make the water passing through these fields become more soluble.

At the urging of a large manufacturer of printing presses, this technology was applied in developing a non-chemical method that would lower the surface tension of the water in a fountain solution and thereby act as a wetting agent....thus reducing the reliance on isopropyl alcohol (C_3H_8O) in the printing process.

The manufacturer of these magnetic units provided six "off the shelf" units that were installed on a Harris M-1000 press in Des Moines, Iowa. The results were very good. An immediate reduction of 60% of alcohol was accomplished. At the time of this writing, the magnetic units have been installed for a little over 21 months and have saved approximately 8,100 gallons of alcohol normally required to operate that one press. This has also been accomplished without sacrificing quality, which of course, is vitally important in the printing industry.

While these results were very gratifying, I thought we could do better. Two new prototypes were built and, with the cooperation of a large printer of greeting cards in Kansas City, these were installed, one on the fountain station of the magenta unit of a 60" MAN sheet fed press and the other on the blue unit of a 38" Toshiba web press. Both of these presses were, at the time,

operating in the range of 18% to 20% alcohol in their fountain solutions. It was hoped that, with no other changes, the level of alcohol could be reduced to 5% to 7%.

Two days later, it was reported that both fountain stations were operating at "0" alcohol and the only alterations made were minute adjustments to the nip, and a slight increase in the speed of the water roller. Ten more units were ordered to complete the treatment of these two presses. To this day, both presses continue to operate at levels of alcohol from 0% to 3%, except when metallic or "day-glo" inks are used. Under those conditions a slightly higher level is needed. For Monday morning start-up, some additional alcohol is added to improve initial roll-up.

Since that time, all fountain stations for that firm have had units installed and the plant has reduced its alcohol use from approximately 270,000# in 1989, to a projection of less than 20,000# in calendar 1991. This represents over a quarter million pounds of VOC's that are being prevented from entering the atmosphere each year....a reduction of 90%.

Since those first installations, hundreds of units have been installed on various types of presses, both heat-set and non heat-set, on sheet fed and web presses throughout the United States and in Canada, South America, Ireland, the United Kingdom and Japan.

The acceptance level for these units has been very high.

This unit should not be considered to be a "cure-all" for the printing industry, but it can be a very useful tool in the effort to reduce VOC's in the work place. If alcohol is being used to correct a mechanical problem, such as roller durometer or minor wear, it will be of no help. Also, some printers may be very reluctant to give up their alcohol. However, in cases where alcohol is being used merely as a wetting agent, reducing the surface tension of the fountain solution can reduce that use of alcohol by an absolute minimum of 50%, and in many cases much much more. The units are extremely cost effective, often giving complete "return on investment" in less than 90 days.

I realize that while this has long been a known technology in many other applications, it's introduction to the printing industry

is new, therefore at the conclusion of this report I will be happy to answer any questions you might have about our equipment. Many of the results we have achieved are referred to in the "Control Techniques Guidelines" draft report prepared for this meeting, under sections 2, 4, 5 and 6, under "Reasonably Available Control Technology" and "Emission control Techniques".

May I say that, we at C. A. Enterprises are very proud to have taken scale and corrosion control technology and adapted it to develop emission control technology.

I thank this panel for their time and, as I said earlier, I will be happy to answer any questions that you or your guests might have.

AMERICAN NEWSPAPER PUBLISHERS ASSOCIATION

COMMENT TO THE DRAFT

OFFSET LITHOGRAPHIC PRINTING

CONTROL TECHNOLOGY GUIDELINE

NAPCTAC MEETING

NOVEMBER 19-21, 1991

DURHAM, NORTH CAROLINA

The American Newspaper Publishers Association (ANPA) is a trade organization that represents the publishers of about 1,350 newspapers published in North America. ANPA maintains a technical staff of chemists, engineers, industrial hygienists and computer scientists to provide technical expertise on matters of environmental regulations and application of new technology.

ANPA would like to thank the EPA staff and contractor for the opportunity for information input throughout the entire draft preparation process. Overall, the staff and the contractor did a very good job of learning an industrial process in spite of the contradictions and diversity of the lithographic process. However, after distributing portions of the Offset Lithography Control Technology Guideline (CTG) to our members, the industry requested that I provide a brief presentation at this meeting to correct several inaccuracies found in the CTG.

The written presentation has two parts. Part one outlines the inaccuracies and the misconceptions about the newspaper printing process that overestimates the emissions from the industry. The second part, not covered in today's oral presentation, are corrections to the generalized technical information about offset printing and definitions contained in the document.

Figure 3-1

The last bar graph should be labeled greater than 250,000 rather than less than.

Newspaper (Non-Heatset Model Plants) Table 3-4

The model newspaper shown in this table is an extrapolation of material usage from an accurate ink consumption data that ANPA complied from a recognized industrial directory. The projected usage of fountain solution and cleaners were estimated from ideal usage ratios instead of empirical data and as a result overestimates or underestimates have occurred. After seeing the proposed model, ANPA conducted a survey of material usage by a group of newspapers that act as technical advisors to ANPA operations and projects. The results from these 63 newspapers were used to generate a model from actual production situations.

The proposed model (Table 3-4) in the CTG overestimates the fountain solution usage and the amount of cleaning solution does not accurately reflect industrial practices. The similarity between the original ink usage data supplied to the EPA and the survey's ink consumption demonstrates accuracy of the survey data. ANPA strongly urges that actual material usage data be incorporated into the newspaper model instead of extrapolated data.

The column heading "Annual Fountain Solution Alcohol Use Rates" is incongruous with information provided in the text about fountain solution composition. Newspaper printing does not use alcohol in its dampening system. The system uses only alcohol substitutes. The word **alcohol** should be removed from the heading and replaced with the term fountain solution **additive.**

TABLE 3-4. NEWSPAPER (NON-HEATSET WEB) MODEL PLANTS ANNUAL PRODUCT USE

Model Plant Code	Size	Total Units[1]	Annual Ink Use Rates (Tons)	Annual Fountain Solution Alcohol Use Rates (Tons)	Annual Cleaning Solution (Tons)
D-I	Very Small	6	2-19	0.1-1	3
D-II	Small	8-10	15-82	1-6	4-5
D-III	Medium	9-24	67-209	5-15	4-12
D-IV	Medium Large	18-48	125-829	9-58	9-24
D-V	Large	40-96	529-1647	37-115	20-48
D-VI	Extra Large	100-120	1072-3239	75-227	50-59

[1] Double Blanket.

ANNUAL USE OF PRODUCTION MATERIALS BY 63 NEWSPAPERS VALUES EXPRESSED IN TONS

	Ink[a]	Fountain Solution[b]	Cleaning Solvent[c]
Very Small (n=10)[d]	17.4 (8.5-26.3) [e]	0.54 (0.11-0.97)	1.06 (0.29-1.83)
Small (n=9)	45.9 (34.7-57.1)	1.44 (0.81-2.07)	3.08 (1.80-4.36)
Medium (n=15)	63.5 (42.7-84.3)	3.01 (2.38-3.64)	4.64 (3.61-5.67)
Med. Large (n=15)	240.0 (148.1-331.9)	13.4 (6.4-20.4)	18.23 (8.0-28.5)
Large (n=11)	823 (539-1107)	46.2 (17.8-74.6)	53.0 (12.3-93.7)
Extra Large (n=3)	1835 (1250-2330)[f]	85.8 (30.0-119.2)[f]	57.2 (23.8-106.2)[f]

a Combines color and black ink used
b Tons of concentrated fountain solution consumed—calculated using a specific gravity of 8 pounds per gallon
c Tons of cleaning solvents consumed—calculated using a specific gravity of 7.5 pounds per gallons
d Number of newspapers surveyed in each circulation class
e Mean value and numbers within parenthesis represent the statistical 95 percent confidence limit
f Since n < 7, actual range reported

Model Plant Production Use and Baseline (Uncontrolled) Volatile Organic Compound Emissions (average tons per year) Table 5-1

I will address only the values reported for model plant code D (newspaper printing).

Changes made in the Table 3-4 (Newspaper Non-Heatset Model Plants) to reflect actual product usage should also be made in Table 5-1. The use of average consumption rates per hour per unit (Appendix B Section B-1.1) will overestimate the emissions from small newspaper operations utilizing a small press running at slower speeds and underestimate the emissions from large newspapers that use large presses running at 2,200 feet per minute. ANPA supports the simple emissions calculation based on material usage, volatility of product and application of an appropriate emission factor which recognizes that production conditions result in the retention of volatile material within the printed product (Appendix B Section B-2.1). However, the volatility of the average products used to calculate the uncontrolled baseline levels does not reflect the characteristics of the average materials used in commerce. At best they represent the extremes.

INKS

The use of a 30 percent VOC ink as an average news ink is unrealistic. In 1989, ANPA tested 31 black and 21 color news inks under the severe conditions of Method 24A. The black inks had a mean value of 22 percent +/- 3.6 (95 percent confidence limit) and color inks had a mean value of 19 percent +/- 3.0 (95 percent confidence limit). Later that year a test of other offset inks using Method 24 produced a range of VOC values: black 2-20 percent, color 2-13 percent.

In 1990, ANPA requested seven different news ink manufacturers to submit three of their most commercially successful black ink formulation for a printing evaluation project being conducted by ANPA. A portion of the test protocol was to test the VOC content of the ink versus press performance. Of the 19 inks submitted for evaluation, only two inks had VOC content greater than 18 percent (24 and 26 percent respectively) and the median value was nine percent.

These data demonstrate that a 30 percent VOC news ink would represent less than 2.5 percent of the inks used in newspaper printing. The rational for using a 30 percent value is that it falls between the zero to 45 percent limit based on theoretical estimates of emissions from mass balance and some limited empirical test data. The theoretical limit represents a range of how inks can be formulated and not how the "typical" news ink is formulated.

A VOC content of 12 percent would be a more fair estimate of an average news ink. Any value exceeding 22.5 percent (the median value of 0 to 45) can not represent the average theoretical ink. ANPA requests that the values for ink emissions in Table 5-1 be recalculated to reflect a "typical" ink with a volatility of 12 percent. This change should also be made in Appendix B Section B-2.1.

ANPA requests an inclusion of an emission credit for the VOC content of waste ink that is incinerated.

FOUNTAIN SOLUTION

In section 2.5.2, the text refers to a newspaper's fountain solution usage to vary from 1 to 150 tons. It is assumed that material as purchased is 100 percent alcohol substitute. This assumption is erroneous and incongruous with statements made in section 3.5.2.

The newspaper industry purchases from a variety of vendors a "one-step solution" concentrated solution as described on page 3-40. Fountain solution is defined in section 3.5.2 as "...the fountain solution is water-based. The fountain solution contains wetting agents, acids or buffer salts to maintain the pH of the solution, small quantities of gum arabic or synthetic resins, and a dampening aid to enhance the spreadability of the fountain solution across the printing plate." Non-alcohol dampening aids that characterize newspaper fountain solutions (page 3-40) "...are made up of glycols, such as ethylene glycol, glycol ethers or 'cellosolve ethers', or proprietary compounds, and are chemically similar to alcohol." To contain acids and buffer salts to maintain the pH of the solution and solubilize other inorganic compounds requires that the "one-step" fountain solution contains a significant amounts of water. Inorganic compounds are insoluble in pure glycols and glycol ethers.

ANPA contacted three vendors that supply a significant proportion of the fountain solution concentrate used by the newspaper industry. Each vendor provided a label that contained mixing instructions and in some cases an abbreviated listing of contents. I have attached copies for your review. You will note that mixing instructions are similar to those found in the CTG. The materials sold by Rycoline list deionized water as an ingredient and NENSCO provides the same product in a ready-to-dilute concentration and a super concentrated form. To prepare the ready-to-dilute concentration, five gallons of the super concentrate is added to 50 gallons of water. Since there are not instructions to add any additional alcohol substitutes, one can conclude that the ready-to-dilute form contains about 90 percent water and the volatility would be less than ten percent by weight since the MSDS sheets reports the presence of inorganic salts.

Analytical data support the conclusion that most fountain solution additives purchased by newspapers contain significant amounts of water. On March 13, 1991, ANPA shared the Method 24 results of six different fountain solution concentrates with the EPA. The volatility of these products when water was excluded was less than ten percent.

ANPA requests that values in the Table 5-1 and section 2.5.2 be changed to reflect the chemical characteristics of the types of fountain additives used in newspaper printing. ANPA would suggest that the values be lowered by a factor of ten. This factor assumes a ten percent concentration of alcohol substitute in the purchase product instead of the unrealistic 100 percent concentration assumed in the original model.

In Chapter 7 and Appendix D, the CTG advocates the use of conductivity to measure the concentration of VOC in fountain solution. Conductivity, as used by newspapers to maintain the dilution rate of the concentrated fountain solution, is dependent on the inorganic compounds found in the one-step fountain solution additive and is independent of the non-ionic and non-dielectric alcohol substitutes. However, recognition of the proper concentration of alcohol substitutes in the concentrated fountain solution additive would exclude newspapers from the unnecessary expense of monitoring VOC content of fountain solution by use on a hydrometer or refractive index. Starting concentration of ten percent alcohol substitutes and dilutions rate as high as four ounces per gallons assures that the concentration remains below the recommended control level of 2.5 percent. An addition of

an exclusion for newspaper printing would be beneficial and remove confusion about the process.

Chapter 6 outlines costs of applying a magnetic water treatment to reduce alcohol substitute usage by newspapers. This dubious and unproven water treatment process should not be applied to facilities that have invested in proven water treatment equipment such as reverse osmosis or deionization. Chemical removal water treatment technology improves print quality in areas where the chemistry of the incoming water source varies daily. Water treatment has a minimal effect on the annual fountain solution additive usage but has proven beneficial by making daily fountain solution additive consumption consistent. Application of a magnetic water treatment technology that claims print quality improvement with less fountain solution additive is only anecdotical and not supported by empirical data. It does not justify the minimal expense outline in Table 6-8.

CLEANING SOLUTIONS

Press cleaning is a collection of diverse maintenance procedures in the newspaper industry. Application of single type of cleaning solution to every task requires a dependency on technology that is developing and not proven. Many of these products contain water or caustics that may have an unknown long term detrimental effect, like corrosion, on press equipment. The acknowledgement of low-VOC cleaners containing D-limonene in the CTG demonstrates that some of the products being developed contain compounds that have associated health hazards to the workers. D-limonene has a tainted toxicological history and has been proven to cause skin sensitivity in workers after repeated exposure. Since many of the low-VOC products are new, the quantity of a low-VOC cleaning solution required for cleaning operations is not known and the projected reduction in emission may not be realized because it takes more product to clean the same amount of equipment. In other words, a one-for-one quantity substitution may not be a valid assumption in the economic model, Table 6-9.

ANPA disagrees with the finding that low-VOC cleaning solutions would not have a solid waste impact (Section 6.4.3).

Waste ink that may account for as much as two percent of all ink purchased is composed of ink too contaminated with foreign material to be a usable product and cleaning solution-ink mixture that enters a "catch pan" during the press cleaning. Any cleaning material that lowers the BTU content or is detrimental to reclaiming a usable ink product from waste ink creates a significant solid waste dilemma for a newspaper. For smaller newspapers, the only economical means to dispose of waste ink is by incineration. The price of disposal is dependent on the BTU content of the material and an increase in water content caused by water-borne low-VOC cleaners increases the cost and limits the number of vendors willing to handle the waste. Waste minimization by ink reclamation requires that all non-ink materials such as solvents, water and paper fibers be removed from the waste ink. The use of low-VOC detergent cleaners that can not removed by distillation could disrupt the ink-fountain solution interaction and make the reclaimed ink unusable.

In a like fashion, cleaning solutions that become too dirty for reuse would either require a larger energy input to separate them from the water content or higher disposal cost for low BTU aqueous waste. The disposal problems related to non-volatile distillation bottoms are unknown. Disposal options for detergent cleaners would very limited.

ANPA requests that the EPA consider the inclusion of cleaners with lower vapor pressure that are less volatile as an alternative to concentration limit on VOC content. This

would allow the printer the option to use the best products that minimize total waste production and assure that all necessary maintenance operations can be performed.

ANPA requests that the EPA consider a credit for the solvent that leaves the facility on cleaning rags. The laundry service charges an "environmental charge" for the purpose of disposing the materials contained on the rags. In effect, the same material is being regulated twice.

This concludes my oral presentation.

ANPA requests the following technical corrections to text contained in the CTG.

- Section 2.4.1 second paragraph: The offset **Heat-set** lithographic printing industry
- Section 2.4.3.2: D-limonene does not have a lower volatility than products commonly used. The boiling point of D-limonene is similar to decane that is a major component of mineral spirit cleaners
- Section 3.2 first paragraph: When the image plate is made, the image area is rendered **oil receptive** and water-repellant
- Section 3.3.2 second and third paragraph: For a web press the across cylinder dimension determines the width of the product and the around the cylinder dimension determines the length of the product. The text has this concept reversed.

DISTRIBUTION OF METHOD 24 PERCENT VOLATILE CONTENT FOR 19 COMMERCIALLY AVAILABLE BLACK INKS IN 1990

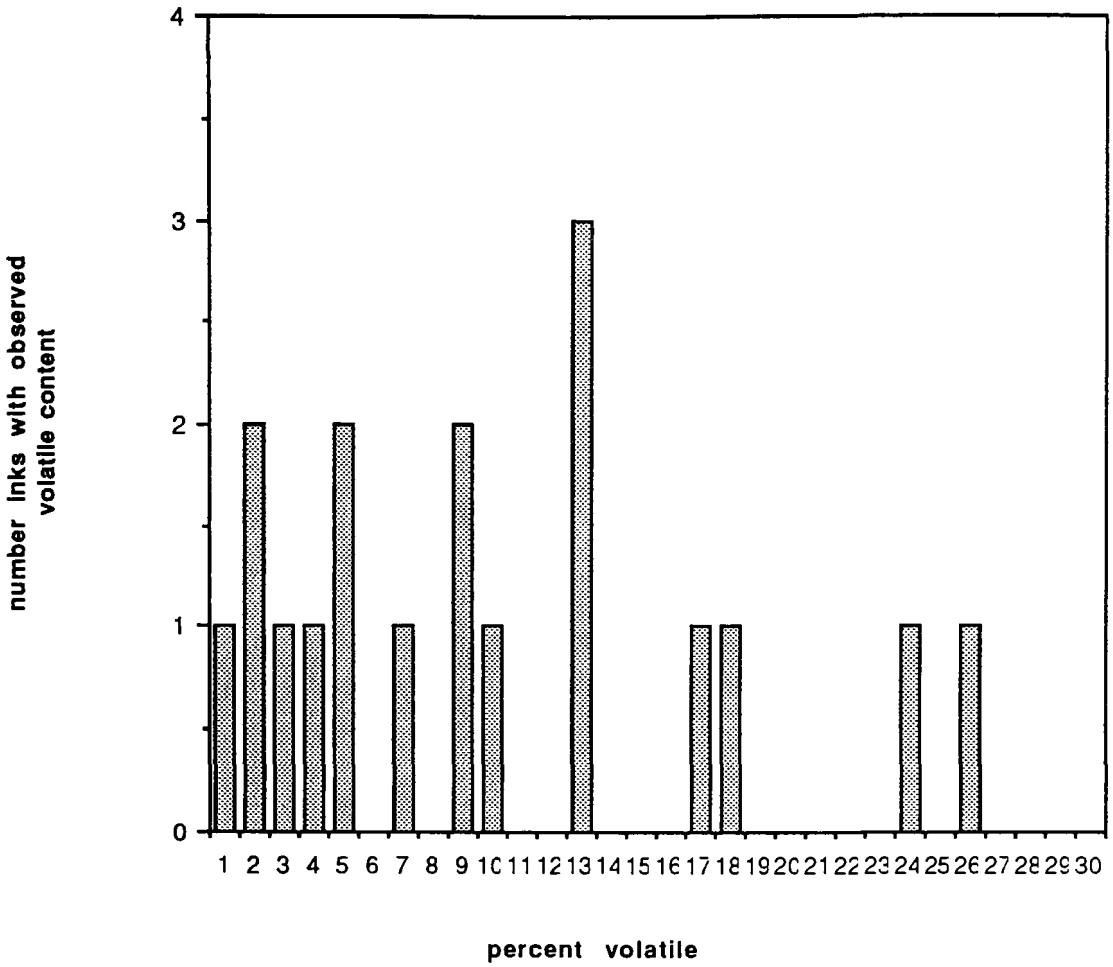

WARNING!

CAUSES IRRITATION

AVOID CONTACT WITH SKIN AND EYES

AVOID PROLONGED OR REPEATED BREATHING OF MIST

PROTECTIVE EQUIPMENT

FOR NORMAL USE WEAR RECOMMENDED PROTECTIVE GLOVES AND SAFETY GLASSES

FIRST AID

EYES IMMEDIATELY FLUSH WITH WATER FOR AT LEAST 15 MINUTES. CONTACT LENSES MUST BE REMOVED GET MEDICAL ATTENTION

SKIN REMOVE ALL CONTAMINATED CLOTHING WASH SKIN WITH SOAP AND WATER

BREATHING

NO ILL EFFECTS EFFECTED FROM INHALING THIS PRODUCT UNLESS WHEN USED IN COMBINATION WITH A SOLVENT ISOPROPYL ALCOHOL

SWALLOWING

DILUTE WITH TWO GLASSES OF WATER AND INDUCE VOMITING GET MEDICAL ATTENTION

EXTINGUISHING MEDIA

IN CASE OF FIRE, USE WATER (FLOOD WITH WATER) DRY CHEMICAL, CO2 OR ALCOHOL FOAM

FOR INDUSTRIAL USE ONLY

KEEP OUT OF THE REACH OF CHILDREN

RYCOLINE

SEVEN DEX FOUNTAIN SOLUTION

PRODUCT NO. 23050

DIRECTIONS FOR USE. USE 1 TO 3 OZ TO ONE GALLON OF WATER FOR DESIRED RESULTS.

CONTAINS: DEIONIZED WATER CAS # 7732-18-5
DIPROPYLENE GLYCOL CAS # 25265-71-8
DIPOTASSIUM PHOSPHATE CAS # 7758-11-4
SODIUM HEXAMETAPHOSPHATE CAS # 68915-31-1
MONOPOTASSIUM PHOSPHATE CAS # 7778-77-0

SPILL RESPONSE PROCEDURE: USE ABSORBENT MATERIAL TO COLLECT AND CONTAIN FOR DISPOSAL. CONTAIN LARGE SPILL AND PUMP TO SUITABLE TANK. WASH AREA WITH SUITABLE DETERGENT AND WATER AND THOROUGHLY RINSE WITH WATER.

FOR CHEMICAL EMERGENCY - SPILL, LEAK, FIRE, EXPOSURE OR ACCIDENT, CALL CHEMTREC 800-424-9300 DAY OR NIGHT.

WASTE DISPOSAL: USE PLASTIC CONTAINERS AND DISPOSE OF IN AN APPROVED LICENSED SITE. DISPOSE OF ALL WASTES IN ACCORDANCE WITH FEDERAL, STATE AND LOCAL REGULATIONS

RYCOLINE

READ M.S.D.S. BEFORE USING PRODUCT

RYCOLINE PRODUCTS, INC.
5540 NORTHWEST HIGHWAY, CHICAGO, IL 60630
PHONE: (312) 775-6755 • FAX (312) 775-9414

RYCOLINE

QA #

HMIS

		HAZARD INDEX
HEALTH	0	0 - Minimal
FLAMMABILITY	0	1 - Slight
REACTIVITY	0	2 - Moderate
PERSONAL PROTECTION	X	3 - Serious
		4 - Severe

STORAGE AND HANDLING

KEEP FROM FREEZING
KEEP OUT OF SUN AND EXCESSIVE HEAT
KEEP CONTAINER CLOSED WHEN NOT IN USE
DO NOT PUNCTURE CONTAINER
NEVER USE PRESSURE TO EMPTY CONTAINER
DO NOT USE CONTAINER AS A DILUTION OR MIXING VESSEL
REMOVE CAP CAREFULLY TO RELIEVE POSSIBLE INTERNAL PRESSURE

DANGER

AFTER THIS CONTAINER HAS BEEN EMPTIED IT MAY CONTAIN EXPLOSIVE AND HARMFUL VAPORS AND RESIDUE. KEEP AWAY FROM HEAT, SPARKS AND FLAMES! DO NOT CUT, PUNCTURE, OR WELD ON OR NEAR THIS CONTAINER DO NOT RE-USE CONTAINER FOR ANY PURPOSE UNTIL COMMERCIALLY CLEANED

RYCOLINE

SEVEN FOUNTAIN SOLUTION TYPE P

PRODUCT NO. 23040

WARNING!

CAUSES IRRITATION

AVOID CONTACT WITH SKIN AND EYES.

AVOID PROLONGED OR REPEATED BREATHING OF MIST.

PROTECTIVE EQUIPMENT

FOR NORMAL USE WEAR RECOMMENDED PROTECTIVE GLOVES AND SAFETY GLASSES

FIRST AID

EYES: IMMEDIATELY FLUSH WITH WATER FOR AT LEAST 15 MINUTES. CONTACT LENSES MUST BE REMOVED. GET MEDICAL ATTENTION.

SKIN: REMOVE ALL CONTAMINATED CLOTHING. WASH SKIN WITH SOAP AND WATER.

BREATHING:

NO ILL EFFECTS EXPECTED FROM INHALING THIS PRODUCT UNLESS WHEN USED IN COMBINATION WITH A SOLVENT: ISOPROPYL ALCOHOL.

SWALLOWING:

DILUTE WITH TWO GLASSES OF WATER AND INDUCE VOMITING. GET MEDICAL ATTENTION.

EXTINGUISHING MEDIA

IN CASE OF FIRE, USE WATER (FLOOD WITH WATER) DRY CHEMICAL, CO2 OR ALCOHOL FOAM.

FOR INDUSTRIAL USE ONLY

KEEP OUT OF THE REACH OF CHILDREN

DIRECTIONS FOR USE: USE 1 TO 3 OZ. TO ONE GALLON OF WATER FOR DESIRED RESULTS.

CONTAINS: DEIONIZED WATER CAS # 7732-18-5
DIPROPYLENE GLYCOL CAS # 25265-71-8
DIPOTASSIUM PHOSPHATE CAS # 7758-11-4
SODIUM HEXAMETAPHOSPHATE CAS # 68915-31-1
MONOPOTASSIUM PHOSPHATE CAS # 7778-77-0

SPILL RESPONSE PROCEDURE: USE ABSORBENT MATERIAL TO COLLECT AND CONTAIN FOR DISPOSAL. CONTAIN LARGE SPILL AND PUMP TO SUITABLE TANK. WASH AREA WITH SUITABLE DETERGENT AND WATER AND THOROUGHLY RINSE WITH WATER.

FOR CHEMICAL EMERGENCY - SPILL, LEAK, FIRE, EXPOSURE OR ACCIDENT, CALL CHEMTREC 800-424-9300 DAY OR NIGHT.

WASTE DISPOSAL: USE PLASTIC CONTAINERS AND DISPOSE OF IN AN APPROVED LICENSED SITE. DISPOSE OF ALL WASTES IN ACCORDANCE WITH FEDERAL, STATE AND LOCAL REGULATIONS.

RYCOLINE

READ M.S.D.S. BEFORE USING PRODUCT
RYCOLINE PRODUCTS, INC.
5540 NORTHWEST HIGHWAY, CHICAGO, IL 60630
PHONE: (312) 775-6755 • FAX (312) 775-9414

RYCOLINE

QA #

HMIS

		HAZARD INDEX
HEALTH	0	0 - Minimal
FLAMMABILITY	0	1 - Slight
REACTIVITY	0	2 - Moderate
PERSONAL PROTECTION	X	3 - Serious
		4 - Severe

STORAGE AND HANDLING

KEEP FROM FREEZING
KEEP OUT OF SUN AND EXCESSIVE HEAT
KEEP CONTAINER CLOSED WHEN NOT IN USE
DO NOT PUNCTURE CONTAINER
NEVER USE PRESSURE TO EMPTY CONTAINER
DO NOT USE CONTAINER AS A DILUTION OR MIXING VESSEL
REMOVE CAP CAREFULLY TO RELIEVE POSSIBLE INTERNAL PRESSURE

DANGER

AFTER THIS CONTAINER HAS BEEN EMPTIED IT MAY CONTAIN EXPLOSIVE AND HARMFUL VAPORS AND RESIDUE KEEP AWAY FROM HEAT, SPARKS AND FLAMES! DO NOT CUT, PUNCTURE, OR WELD ON OR NEAR THIS CONTAINER DO NOT RE USE CONTAINER FOR ANY PURPOSE UNTIL COMMERCIALLY CLEANED

WARNING!

CAUSES IRRITATION

AVOID CONTACT WITH SKIN AND EYES

AVOID PROLONGED OR REPEATED BREATHING OF MIST

PROTECTIVE EQUIPMENT

FOR NORMAL USE WEAR RECOMMENDED PROTECTIVE GLOVES AND SAFETY GLASSES

FIRST AID

EYES IMMEDIATELY FLUSH WITH WATER FOR AT LEAST 15 MINUTES CONTACT LENSES MUST BE REMOVED GET MEDICAL ATTENTION.

SKIN. REMOVE ALL CONTAMINATED CLOTHING WASH SKIN WITH SOAP AND WATER.

BREATHING:

NO ILL EFFECTS EXPECTED FROM INHALING THIS PRODUCT UNLESS WHEN USED IN COMBINATION WITH A SOLVENT: ISOPROPYL ALCOHOL.

SWALLOWING

DILUTE WITH TWO GLASSES OF WATER AND INDUCE VOMITING. GET MEDICAL ATTENTION.

EXTINGUISHING MEDIA

IN CASE OF FIRE, USE WATER (FLOOD WITH WATER) DRY CHEMICAL, CO2 OR ALCOHOL FOAM

FOR INDUSTRIAL USE ONLY

KEEP OUT OF THE REACH OF CHILDREN

RYCOLINE

ALKALINE FOUNTAIN SOLUTION 5-018A

PRODUCT NO 20250

DIRECTIONS FOR USE: USE 1 TO 3 OZ. TO ONE GALLON OF WATER FOR DESIRED RESULTS

CONTAINS: DEIONIZED WATER CAS # 7732-18-5
TETRAPOTASSIUM PYROPHOSPHATE CAS # 7320-34-5
SODIUM HEXAMETAPHOSPHATE CAS # 68915-31-1
SODIUM HYDROXIDE CAS # 1310-73-2
POLYETHEYLENE GLYCOL CAS # 25322-68-3

SPILL RESPONSE PROCEDURE: USE ABSORBENT MATERIAL TO COLLECT AND CONTAIN FOR DISPOSAL. CONTAIN LARGE SPILL AND PUMP TO SUITABLE TANK. WASH AREA WITH SUITABLE DETERGENT AND WATER AND THOROUGHLY RINSE WITH WATER.

FOR CHEMICAL EMERGENCY - SPILL, LEAK, FIRE, EXPOSURE OR ACCIDENT, CALL CHEMTREC 800-424-9300 DAY OR NIGHT.

WASTE DISPOSAL: USE PLASTIC CONTAINERS AND DISPOSE OF IN AN APPROVED LICENSED SITE DISPOSE OF ALL WASTES IN ACCORDANCE WITH FEDERAL, STATE AND LOCAL REGULATIONS.

READ M.S.D.S. BEFORE USING PRODUCT

RYCOLINE PRODUCTS, INC.
5540 NORTHWEST HIGHWAY, CHICAGO, IL 60630
PHONE: (312) 775-6755 • FAX (312) 775-9414

QA #

HMIS

HEALTH	1
FLAMMABILITY	0
REACTIVITY	0
PERSONAL PROTECTION	C

HAZARD INDEX

0 Minimal
1 Slight
2 Moderate
3 - Serious
4 - Severe

STORAGE AND HANDLING

KEEP FROM FREEZING
KEEP OUT OF SUN AND EXCESSIVE HEAT
KEEP CONTAINER CLOSED WHEN NOT IN USE
DO NOT PUNCTURE CONTAINER
NEVER USE PRESSURE TO EMPTY CONTAINER
DO NOT USE CONTAINER AS A DILUTION OR MIXING VESSEL
REMOVE CAP CAREFULLY TO RELIEVE POSSIBLE INTERNAL PRESSURE

DANGER

AFTER THIS CONTAINER HAS BEEN EMPTIED IT MAY CONTAIN EXPLOSIVE AND HARMFUL VAPORS AND RESIDUE KEEP AWAY FROM HEAT, SPARKS AND FLAMES! DO NOT CUT, PUNCTURE, OR WELD ON OR NEAR THIS CONTAINER DO NOT RE-USE CONTAINER FOR ANY PURPOSE UNTIL COMMERCIALLY CLEANED

WARNING!

CAUSES IRRITATION

AVOID CONTACT WITH SKIN AND EYES.

AVOID PROLONGED OR REPEATED BREATHING OF MIST.

PROTECTIVE EQUIPMENT

FOR NORMAL USE WEAR RECOMMENDED PROTECTIVE GLOVES AND SAFETY GLASSES

FIRST AID

EYES: IMMEDIATELY FLUSH WITH WATER FOR AT LEAST 15 MINUTES. CONTACT LENSES MUST BE REMOVED. GET MEDICAL ATTENTION.

SKIN: REMOVE ALL CONTAMINATED CLOTHING. WASH SKIN WITH SOAP AND WATER.

BREATHING:

NO ILL EFFECTS EXPECTED FROM INHALING THIS PRODUCT UNLESS WHEN USED IN COMBINATION WITH A SOLVENT: ISOPROPYL ALCOHOL.

SWALLOWING:

DO NOT INDUCE VOMITING. GET MEDICAL ATTENTION.

EXTINGUISHING MEDIA

IN CASE OF FIRE, USE WATER (FLOOD WITH WATER) DRY CHEMICAL, CO2 OR ALCOHOL FOAM.

FOR INDUSTRIAL USE ONLY

KEEP OUT OF THE REACH OF CHILDREN

RYCOLINE

ALKALINE Y-797 DEX FOUNTAIN SOLUTION

PRODUCT NO. 20030

DIRECTIONS FOR USE: USE 1 TO 3 LIQUID OUNCES PER GALLON OF WATER FOR DESIRED RESULTS.

CONTAINS: DEIONIZED WATER CAS # 7732-18-5
DIPROPYLENE GLYCOL CAS # 25265-71-8
TETRAPOTASSIUM PYROPHOSPHATE CAS # 7320-34-5
SODIUM HEXAMETAPHOSPHATE CAS # 68915-31-1

SPILL RESPONSE PROCEDURE: USE ABSORBENT MATERIAL TO COLLECT AND CONTAIN FOR DISPOSAL. CONTAIN LARGE SPILL AND PUMP TO SUITABLE TANK. WASH AREA WITH SUITABLE DETERGENT AND WATER AND THOROUGHLY RINSE WITH WATER.

FOR CHEMICAL EMERGENCY - SPILL, LEAK, FIRE, EXPOSURE OR ACCIDENT, CALL CHEMTREC 800-424-9300 DAY OR NIGHT.

WASTE DISPOSAL: USE PLASTIC CONTAINERS AND DISPOSE OF IN AN APPROVED LICENSED SITE. DISPOSE OF ALL WASTES IN ACCORDANCE WITH FEDERAL, STATE AND LOCAL REGULATIONS.

RYCOLINE

READ M.S.D.S. BEFORE USING PRODUCT

RYCOLINE PRODUCTS, INC.
5540 NORTHWEST HIGHWAY, CHICAGO, IL 60630
PHONE: (312) 775-6755 • FAX (312) 775-9414

RYCOLINE

UA #

HMIS

HEALTH	1
FLAMMABILITY	0
REACTIVITY	0
PERSONAL PROTECTION	X

HAZARD INDEX

0 - Minimal
1 - Slight
2 - Moderate
3 - Serious
4 - Severe

STORAGE AND HANDLING

KEEP FROM FREEZING
KEEP OUT OF SUN AND EXCESSIVE HEAT
KEEP CONTAINER CLOSED WHEN NOT IN USE
DO NOT PUNCTURE CONTAINER
NEVER USE PRESSURE TO EMPTY CONTAINER
DO NOT USE CONTAINER AS A DILUTION OR MIXING VESSEL
REMOVE CAP CAREFULLY TO RELIEVE POSSIBLE INTERNAL PRESSURE

DANGER

AFTER THIS CONTAINER HAS BEEN EMPTIED IT MAY CONTAIN EXPLOSIVE AND HARMFUL VAPORS AND RESIDUE. KEEP AWAY FROM HEAT SPARKS AND FLAMES. DO NOT CUT PUNCTURE OR WELD ON OR NEAR THIS CONTAINER. DO NOT RE USE CONTAINER FOR ANY PURPOSE UNTIL COMMERCIALLY CLEANED

Nensco

P.O. Box 348
Millbury, MA 01527-0348

liquid gold

Super Concentrate Fountain Solution

Contents: 5 Gallons

MIXING INSTRUCTIONS

Add 30 Gallons of water to mixing tank. With mixer running add the **entire** contents of (2) 5 Gallon containers of Super Concentrate. Then add 15 Gallons of water to make 55 Gallons. Allow to mix for 5 minutes.

** NOTE a 27½ gallon batch may be mixed by adding (1) 5 Gallon container of Super Concentrate to 22½ gallons of water.*

DIRECTIONS: A starting point of 2 oz./gallon or conductivity 1000 over tap water.

CAUTION: Although no health hazard is known, it is advisable to treat this matter with respect: Avoid eye contact. Avoid prolonged or repeated skin contact. DO NOT take internally.

FIRST AID: **Eyes or Skin:** Flush with water. (Eyes only - contact physician) If ingested CONSULT A PHYSICIAN, INDUCE VOMITING. KEEP OUT OF THE REACH OF CHILDREN.

For Professional Use Only.

This product will be replaced if defective in manufacturing, packaging, or labeling. Except for such replacement, this product is sold without warranty, expressed or implied, or liability of any kind.

Boston • Chicago • Los Angeles • Dallas • Atlanta

Nensco

P.O. Box 348
Millbury, MA 01527-0348

liquid gold

News Dot
Fountain Solution

4 - 1 GAL. CONTAINERS

DIRECTIONS: A starting point of 2 oz./gallon or conductivity 1000 over tap water.

CAUTION: Although no health hazard is known, it is advisable to treat this matter with respect: Avoid eye contact. Avoid prolonged or repeated skin contact. DO NOT take internally.

FIRST AID: **Eyes or Skin:** Flush with water. (Eyes only - contact physician) If ingested CONSULT A PHYSICIAN, INDUCE VOMITING. KEEP OUT OF THE REACH OF CHILDREN.

For Professional Use Only.

This product will be replaced if defective in manufacturing, packaging, or labeling. Except for such replacement, this product is sold without warranty, expressed or implied, or liability of any kind.

Boston • Chicago • Los Angeles • Dallas • Atlanta

5 GAL.

Nensco

New England Newspaper Supply Co.

P.O. Box 348
Millbury, MA 01527-0348

ALKA-FOUNT

A1

Fountain Solution

DIRECTIONS:

USE: 1 - 1½ oz./Gallon.

CAUTION!:

Contains Tri Potassium Phosphate Solution. Avoid eye contact. Avoid prolonged or repeated skin contact. DO NOT take internally. The use of protective goggles and chemical resistant gloves is recommendend.

FIRST AID:

Skin - Flush with soap and water. **Eyes** - Flush copiously with water and/or boric acid solution. **IF INGESTED,** administer large volumes of water, milk, soda or other acidic liquids, CONSULT PHYSICIAN. KEEP OUT OF REACH OF CHILDREN.

This product will be replaced if defective in manufacturing, packaging, or labeling. Except for such replacement, this product is sold without warranty, expressed or implied, or liability of any kind.

Millbury, MA • Chicago, IL • Upland, CA • Dallas, TX • Roswell, GA

5 GAL.

Nensco

New England Newspaper Supply Co.

P.O. Box 348
Millbury, MA 01527-0348

ALKA-FOUNT

A2

Super Concentrate Fountain Solution

DIRECTIONS:

Add 30 gallons of water, to mixing vat. With mixer running, add the entire contents of (2) 5 Gallon containers of Super Concentrate. Add remaining 15 gallons of water, to make 55 gallons. Allow to mix for 5 minutes.

** **NOTE** a 27½ gallon batch may be mixed by adding (1) 5 Gallon container of Super Concentrate to 22½ gallons of water.*

LOADING INSTRUCTIONS:

On press load 1 to 1½ oz./gallon or as neccessary.

CAUTION!:

Contains Tri Potassium Phosphate Solution. Avoid eye contact. Avoid prolonged or repeated skin contact. DO NOT take internally. The use of protective goggles and chemical resistant gloves is recommendend.

FIRST AID:

Skin - Flush with soap and water. **Eyes** - Flush copiously with water and or boric acid solution. **IF INGESTED,** administer large volumes of water, milk, soda or other acidic liquids, CONSULT PHYSICIAN. KEEP OUT OF REACH OF CHILDREN.

This product will be replaced if defective in manufacturing, packaging, or labeling. Except for such replacement, this product is sold without warranty, expressed or implied, or liability of any kind.

Millbury, MA • Chicago, IL • Upland, CA • Dallas, TX • Roswell, GA

"The Original Alkaline Fountain Etch"

MIRACLE "V-2020" CONCENTRATE

For Hard Water (up to 200 ppm)

MIRACLE "V-2020" CONCENTRATE

Allows foolproof mixing • Prolongs plate life • Eliminates gumming plates • Is not affected by freezing • Reduces dampener cover changing • Reduces scumming • Gives you sharper printing • Eliminates algae build-up

DIRECTIONS FOR USE:

Add one and half ounce of Miracle "V-2020" Concentrate to each gallon of tap water to make your fountain solution.

Do not mix with other solutions.

NEVER GUM ANOTHER PLATE, NEVER EXPERIENCE STRIPPING AGAIN, AND YOU GET BETTER PRINTING!

Flint Ink CORPORATION

NATIONAL HEADQUARTERS: 25111 GLENDALE AVENUE, DETROIT, MICHIGAN 48239

WARNING

THIS MATERIAL IS AN EYE IRRITANT. EYE PROTECTION SHOULD BE WORN WHEN IT IS HANDLED. IN CASE OF EYE CONTACT, FLUSH EYES WITH PLENTY OF WATER FOR AT LEAST 15 MINUTES AND GET MEDICAL ATTENTION.

PROLONGED OR REPEATED CONTACT WITH SKIN WILL CAUSE IRRITATION. PROTECTIVE GLOVES SHOULD BE WORN WHERE PROLONGED CONTACT MAY OCCUR. IN THE EVENT OF SKIN CONTACT, WASH THOROUGHLY WITH SOAP AND WATER.

Nensco

New England Newspaper Supply Co.

PO Box 348
Millbury MA 01527 0348

Neu·tro·fount
Fountain Solution

DIRECTIONS

A starting point of 2 oz./gallon is suggested.

CAUTION!

Although no health hazard is known, it is advisable to treat this matter with respect: Avoid eye contact. Avoid prolonged or repeated skin contact. DO NOT take internally.

FIRST AID:

Eyes or Skin: Flush with water. (Eyes only - contact physician) If ingested CONSULT A PHYSICIAN, INDUCE VOMITING. KEEP OUT OF THE REACH OF CHILDREN.

For Professional use only. FORM NO N-NFS 5/84 3M

This product will be replaced if defective in manufacturing, packaging, or labeling. Except for such replacement, this product is sold without warranty, expressed or implied, or liability of any kind.

Millbury, MA • Chicago, IL • Upland CA • Dallas, TX • Roswell, GA

ANCHOR™

#2474
PERFECT PINK

ONE-STEP, BUFFERED NEUTRAL FOUNTAIN SOLUTION

DIRECTIONS: PERFECT PINK has been proven effective in producing clean, crisp newspapers and insert work with the "clean oil" and "low rub" inks. Use 2 ounces of PERFECT PINK per gallon of water for a conductivity of approximately 1000 mmhos over the conductivity of the water used. It is recommended that you NOT use over 3 ounces of PERFECT PINK per gallon of water.

ANCHOR/LITHKEMKO, INC.

2535 Ivy Street East
Cumming, Georgia 30130

50 Industrial Loop North
Orange Park, Florida 32073
(904) 264-3500

280 North Ott Street
Corona, California 91720

WARRANTY Neither the seller nor the manufacturer shall be liable for any loss, injury, or damage whatsoever arising from the use of this product, other than replacement or credit for the product itself in case of manufacturing defect only Merchandise contained herein is sold without warranties expressed or implied. These conditions cannot be waived, except in writing by the company.

USE ONLY AS DIRECTED • DO NOT TAKE INTERNALLY • FOR INDUSTRIAL USE ONLY

CAUTION

In case of eye contact, flush with water for 15 minutes and seek medical attention. Wash affected skin areas with soap and water. If swallowed, induce vomiting and seek medical attention. Contains water, Monosodium Phosphate (CAS #7558-80-7), TKPP (CAS #7320-34-5), EDTA (CAS #64-02-8) and Gum (CAS #9000-01-5).

V.O.C. = 0 lbs./gal.

NONPHOTOCHEMICALLY REACTIVE

TARGET ORGAN EFFECTS: None known.

HEALTH	0
FLAMMABILITY	0
REACTIVITY	0
PERSONAL PROTECTION	A

ANCHOR™

#2830
AQUA MAGIC

NEUTRAL FOUNTAIN SOLUTION

DIRECTIONS: Mix fountain solution to yield conductivity of 1000 mmhos over the conductivity of the incoming water. This will normally be obtained by using 2 ounces of fountain solution per gallon of water.

ANCHOR/LITHKEMKO, INC.

2535 Ivy Street East
Cumming, Georgia 30130

50 Industrial Loop North
Orange Park, Florida 32073
(904) 264-3500

280 North Ott Street
Corona, California 91720

WARRANTY. Neither the seller nor the manufacturer shall be liable for any loss, injury, or damage whatsoever arising from the use of this product, other than replacement or credit for the product itself in case of manufacturing defect only. Merchandise contained herein is sold without warranties expressed or implied. These conditions cannot be waived, except in writing by the company.

USE ONLY AS DIRECTED • DO NOT TAKE INTERNALLY • FOR INDUSTRIAL USE ONLY

CAUTION

In case of eye contact, flush with water for 15 minutes and seek medical attention if irritation persists. Wash affected skin areas with soap and water. If swallowed, induce vomiting and seek medical attention. Contains water, Dipotassium Phosphate (CAS #7758-11-4), Monopotassium Phosphate (CAS #7778-77-0), Sodium Hexameta Phosphate (CAS #10124-56-8) and EDTA (CAS #64-02-8).

V.O.C. = 0.1 lbs./gal.

NONPHOTOCHEMICALLY REACTIVE

TARGET ORGAN EFFECTS: None known.

HEALTH	1
FLAMMABILITY	0
REACTIVITY	0
PERSONAL PROTECTION	A

ANCHOR™

#2833
FIRST IMPRESSION

ALKALINE FOUNTAIN SOLUTION

DIRECTIONS: Use 1.5 to 2.5 ounces per gallon of water for desired results. Conductivity should read approximately 1200-1500 mmhos above the conductivity of the water used.

ANCHOR/LITHKEMKO, INC.
50 Industrial Loop North, Orange Park, FL 32073
13505 Marquardt Avenue, Santa Fe Springs, CA 90670
(904) 264-3500

WARRANTY: Neither the seller nor the manufacturer shall be liable for any loss, injury, or damage whatsoever arising from the use of this product, other than replacement or credit for the product itself in case of manufacturing defect only. Merchandise contained herein is sold without warranties expressed or implied. These conditions cannot be waived, except in writing by the company.
USE ONLY AS DIRECTED • DO NOT TAKE INTERNALLY • FOR INDUSTRIAL USE ONLY

CAUTION

In case of eye contact, flush with water for 15 minutes and seek medical attention. Wash affected skin areas with soap and water. May be harmful if swallowed. If swallowed, induce vomiting and seek medical attention immediately. Contains water, Trisodium Phosphate (CAS #10101-89-0), Sodium Hexameta Phosphate (CAS #10124-56-8) and Tetrapotassium Pyrophosphate (CAS #7320-34-5).

V.O.C. = 0.07 lbs./gal.

NONPHOTOCHEMICALLY REACTIVE

TARGET ORGAN EFFECTS: May cause eye irritation.

HEALTH	1
FLAMMABILITY	0
REACTIVITY	0
PERSONAL PROTECTION	A

ANCHOR™

#2606
ALKALINE FOUNTAIN CONCENTRATE

NEWSPAPER AND INSERT ALKALINE FOUNTAIN SOLUTION

DIRECTIONS: Use 2 ounces of concentrate per gallon of water. Conductivity should read approximately 800 mmhos over the conductivity of the water used. The pH of the working solution should be approximately 10.0.

ANCHOR/LITHKEMKO, INC.

2535 Ivy Street East
Cumming, Georgia 30130

50 Industrial Loop North
Orange Park, Florida 32073
(904) 264-3500

280 North Ott Street
Corona, California 91720

WARRANTY: Neither the seller nor the manufacturer shall be liable for any loss, injury, or damage whatsoever arising from the use of this product, other than replacement or credit for the product itself in case of manufacturing defect only. Merchandise contained herein is sold without warranties expressed or implied. These conditions cannot be waived, except in writing by the company.

USE ONLY AS DIRECTED • DO NOT TAKE INTERNALLY • FOR INDUSTRIAL USE ONLY

CAUTION

In case of eye contact, flush with water for 15 minutes and seek medical attention. Wash affected skin areas with soap and water and seek medical attention if irritation persists. Harmful if swallowed. If swallowed, do NOT induce vomiting and seek medical attention immediately. Contains water, Solvent EB (CAS #111-76-2) and Sodium Metasilicate (CAS #6834-92-0).

V.O.C. = 0.3 lbs./gal.

NONPHOTOCHEMICALLY REACTIVE

TARGET ORGAN EFFECTS: Irritating to eyes, skin and respiratory tract. May be absorbed through skin.

HEALTH	2
FLAMMABILITY	0
REACTIVITY	1
PERSONAL PROTECTION	B

COMMENTS ON CTG FOR OFFSET LITHOGRAPHY

JAMES E. RENSON

COORDINATOR
ENVIRONMENTAL AFFAIRS

NATIONAL ASSOCIATION OF PRINTING INK MANUFACTURERS

PRESENTED AT NAPCTAC MEETING
NOVEMBER 20, 1991
DURHAM, NORTH CAROLINA

Comments on CTG for offset lithography.

Ladies and Gentleman:

My name is James E. Renson. I am Coordinator, Environmental Affairs for the National Association of Printing Ink Manufacturers in Harrison, NY.

NAPIM

NAPIM is a national trade association representing small, medium and large printing ink manufacturers in the U.S. Its 80 members account for nearly 90% of the total U.S. sales of printing ink. The printing ink industry is composed of 224 companies operating a total of 504 manufacturing facilities according to the U.S. Census of Manufactures for the year 1987. Total shipments of printing ink in the U.S. were over $2.7 billion in 1990. NAPIM has been vitally concerned with the need to clarify the definition of VOC which currently varies widely from state to state. We are also vitally concerned that the definition of VOC and the application of this definition to various types of printing inks be reasonable and fair to the printing and converting industries in the U.S.

We would like to compliment Radian Corporation for the preparation of this draft CTG. We believe that it is a comprehensive exposition of considerations to be assessed in connection with the potential environmental burden from the offset lithography printing industry in the U.S. We very much appreciate this opportunity to comment.

ESTIMATE OF VOC OF NON-HEATSET INKS TOO HIGH

In Section 2.5.1 of the CTG the VOC content for non-heatset web inks is given as 30% VOC. We believe this is unrealistically high.

Table 1 - This table calculates the total weighted average of VOC for all types of newsink based on the proportion of total pounds shipped in 1990 for each major type of newsink. Not only do newsinks account for most non-heatset inks produced, but they are also typical of other types of non-heatset web inks as well. As we show in the table, black offset ink accounted for about 65% of all the newsink shipped and conventional or standard newsink, in turn, represented about 50% of this quantity. The second column of the table shows the average percent VOC as measured by Method 24 based on a detailed analysis of the various types of these in. Then using standard offset inks as our

example, we estimate that VOC content is around 5%. The weighted average VOC for this type of ink would be 1.3%. Using the same calculations, we show that the weighted average percent VOC in all types of newsink shipped in 1990 was around 7.4%.

DEFINITION OF VOC

We note that the CTG is silent on the definition of VOC and does not delineate the test method to be used. Based on previous discussions with EPA staff, it is our understanding that oven test Method 24 will be specified. While we are satisfied that the use of oven test Method 24 is suitable to measure VOC's for heatset inks, members of the printing ink industry feel strongly that this test method is much too severe for measuring VOC content of inks which do not dry with the application of heat.

Under oven test Method 24 the VOC content is determined by measuring the weight loss of the sample heated at a temperature of 110 degrees C for one hour. Instead, we recommend that the test method used in the California Bay Area known as Method 30 be used. In Method 30 VOC is determined by the weight loss when the sample is heated for one hour at 40 degrees C. We will show here why we consider this to be a more appropriate test for no-heat inks.

Table 2 - In order to obtain an understanding of the temperatures which might be expected to be reached on non-heatset presses, measurements have been made under actual press conditions. This slide shows temperatures recorded on three different types of newspaper presses. Please note that 40 degrees C essentially represents the maximum temperatures that would be reached.

Table 3 - This next slide summarizes sheet fed press temperatures measured on five different presses. Note that in only one case (Komori) did any temperature exceed 40 degrees C and this is a press fitted with an infra red (IR) unit as are two of the other presses where the temperature did not exceed 40 degrees C. Please note that the inks are not being dried by the application of heat, but a low temperature infra red unit is sometimes placed a the end of a sheetfed press to help set the ink before the sheet enters the delivery pile. Please note also that even with the IR dryer, temperatures are not expected to significantly exceed 40 degrees C.

Table 4 - Method 24 was developed for measuring the VOC's in paints; not printing inks. The types of lower boiling solvents used in paints are not found in non-heatset printing ink. Table 4 shows a comparison between mineral spirits, a solvent commonly used in paints and coatings, with light distillate oil which are the so-called solvents used in non-heatset inks. Solvents with high vapor pressures and low boiling points used in coatings are designed to evaporate from the coating while the oils used in non-heatset inks have low vapor pressures and high boiling points and are designed to remain with the ink film.

Table 5 - In order to determine the actual emission that would be expected on a press for various types of news inks, measurements were taken by ANPA on a full scale press. Table 5 shows the emissions at critical points on the press as determined by sampling with an approved EPA sampling device for airborne vapors (carbon tube). We consider these to be very low emission levels. In order to put them into perspective it may be helpful to compare them with the 8-hour time weighted average threshold limit value established by OSHA for airborne mineral spirits which is 2,900mg/M^3.

Table 6 - Table 6 compares results obtained with Method 30 and Method 24 on the same ink. It is clear that the excessively high temperature in Method 24 results in VOC measurements which do not reflect press conditions

Also shown on this table is a comparison of thermogravimetric analysis (TGA) results with Method 30. The TGA apparatus is a very sensitive analytical instrument designed to give a continuous record of weight loss as a function of temperature and time. In order to gain a better understanding of VOC loss for non-heat set ink, NAPIM contracted for a series of TGA tests at the U.S. Testing laboratories. While only one set of data are shown in this table, a considerable amount of TGA data were generated have been provided to Radian. It demonstrates that Method 30 agrees very well with the more precise TGA analytical method.

CONCLUSION

The previous slides demonstrate why test Method 24 is not suitable to realistically measure VOC content of non-heatset lithographic inks. Instead oven test Method 30 measures VOC content at 40 degrees C which is consistent with maximum temperatures measured on non-heatset lithographic presses. Therefore NAPIM strongly recommends that the final draft CTG include oven test Method 30 as the method of choice for determining VOC content of non-heatset lithographic inks.

so/
comments.jer

TABLE 1

ESTIMATED VOC FOR NEWS INKS

% OF TOTAL LBS		% LBS	AVG.* % VOC	CALCULATION	VOC WEIGHTED AVG. %
80	BLACKS				
	Letterpress	35	4	.35 x .80 x 4	1.1
	Offset	65			
	Standard	50	5	.65 x .80 x .50 x 5	1.3
	Low Rub	35	10	.65 x .80 x .35 x 10	1.8
	No Rub	15	25	.65 x .80 x .15 x 25	2.0
					5.1
20	COLORS				
	Oil	40	10	.20 x .4 x 10	0.8
	Soy	60	3	.20 x .6 x 3	0.4
					1.2
TOTAL					7.4

* Average % VOC measured by Method 24.

TABLE 2

NEWSPAPER PRESS OPERATING TEMPERATURES (°C)

Circulation	Press Type	Form Roller			Blanket Cylinder		
		Min	Max	High	Min	Max	High
37,000	Urbanite	24	34	36	n/a	n/a	n/a
375,000	Metro	28	34	39	37	36	42
717,000	TKS	28	32	38	29	36	40

Min = Minimum Observed Running Temperature

Max = Maximum Observed Running Temperature

High = Highest Temperature Observed After Press Was Stopped

TABLE 3

SHEETFED PRESS TEMPERATURES

PRESS	MIEHLE, 4C 46"	MIEHLE, 4C 34"	MIEHLE, 4C 44"	HARRIS, 6C 25"	KOMORI, 6C 40"
SPEED, IPH	4400	7800	5300	4000	9000
ROOM TEMPERATURE, °C	26	32	31	21	21
INK FOUNTAIN, °C	31	32	32	27	38
WATER FOUNTAIN, °C	16	10	10	13	--
INK TRAIN ROLLERS, °C	32	32	32	32	37
FORM ROLLER, °C	38	32	38	27	37
PRINTING PLATE, °C	31	31	32	27	29
DELIVERY	32	38	32	24	43
IR UNIT	NO	YES	YES	NO	YES

RAYTEK RAYNGER IR PISTOL THERMOMETER, Model #R-380 - Used to obtain above data.

TABLE 4

COMPARISON OF MINERAL SPIRITS
AND
LIGHT DISTILLATE OIL (L.D.O.)

	VAPOR PRESSURE mm Hg	
Temp. (°C)	Rule 66 Min Sp.	L.D.O. 280 °C IBP
20	5.6	0.01
38	12.5	0.03
66	37.0	0.18
121	200.0	3.00
177	740.0	26.00

Distillation Range °C		
IBP	160	281
50%	177	290
FBP	193	315

TABLE 5

VOLATILE EMMISSIONS
DURING CONTROLLED PRODUCTION RUN
(mg/M^3)

Sample Location	Ink Type: Regular Black	Low Rub Black	No Rub Black
Right Ink Form Roller	3.1	5.0	2.6
Left Ink Form Roller	3.7	5.2	3.2
Pipe Roller	0.6	5.7	1.1

TABLE 6

COMPARISON OF TGA AND OVEN TEST DATA

	VOC, % LOSS		
INK	TGA (40° C)	Method 30 (40° C)	Method 24 (110° C)
Sheetfed	0	1.8	14.8
No-Rub News	0.5	1.7	24.3

USEPA'S

NATIONAL AIR POLLUTION CONTROL TECHNIQUES ADVISORY COMMITTEE MEETING

NOVEMBER 20, 1991

OFFSET LITHOGRAPHY
CTG DOCUMENT

VOC SOURCES

1. Ink Oil Solvents
2. Fountain Solution Additives
3. Cleaning Solvents
   a. Blanket Wash
   b. Auto Blanket Wash
   c. Roller Wash
   d. Other Cleaning

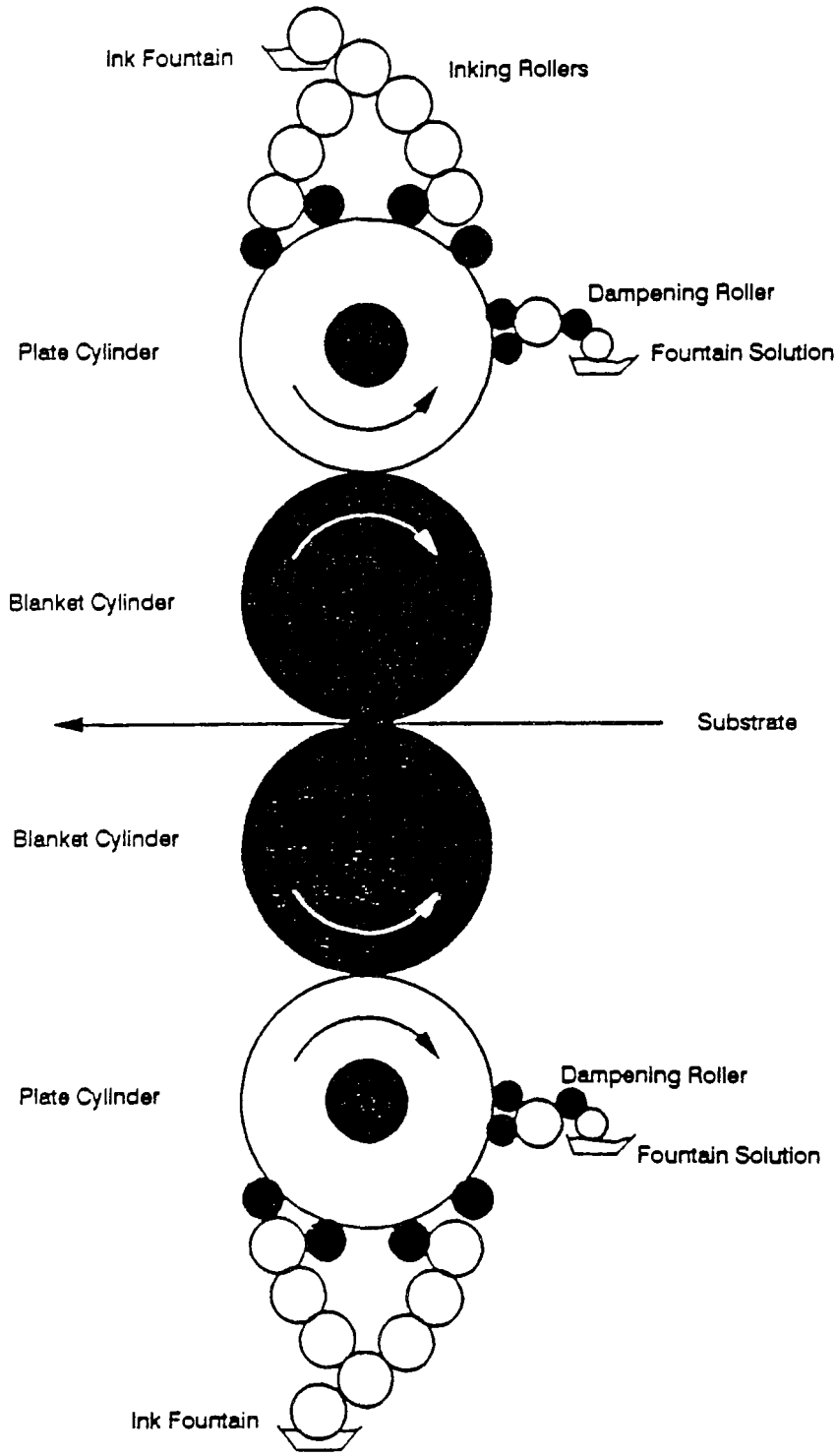

3904800R

Figure 3-12. Schematic diagram of blanket-to-blanket printing.

CONTROL COSTS

CONDENSER-FILTER

CONDENSER-FILTER
w/ACTIVATED CARBON

INCINERATORS

THERMAL
CATALYTIC

MODEL RULE

APPLICABILITY

DEFINITIONS

EMISSION STANDARDS

EQUIPMENT STANDARDS

EMISSION STANDARDS TESTING

EQUIPMENT STANDARDS TESTING

MONITORING REQUIREMENTS

REPORTING/RECORDKEEPING

ECB | Environmental Conservation Board
of the Graphic Communications Industries

An Intra-Industry Organization for Environmental Affairs

1899 Preston White Drive
Reston, VA 22091-4326
703/648-3218 • FAX 703/648-3219

ENVIRONMENTAL CONSERVATION BOARD

OF THE

GRAPHIC COMMUNICATIONS INDUSTRY, INC.

CTG Committee Draft Comments

on

United States Environmental Protection Agency

Control Techniques Guideline

For

Offset Lithographic Printing

September 6, 1991 Draft

Submitted to the

National Air Pollution Control Technical Advisory Committee

on November 20, 1991

The following comments on the September 6, 1991 draft of the Offset Lithographic Printing Control Techniques Guideline are organized in two sections. The first section (I) presents a subject-by-subject overview of the draft and the second section (II) provides a sentence-by-sentence critique of the document.

printed on recycled paper with vegetable oil ink

Environmental Conservation Board

Of The

Graphic Communications Industries

CTG Committee Comments

On

Control Techniques Guideline

For

Offset Lithographic Printing

(September 6, 1991 Draft)

Outline of Comments

I. Overview

A. Introduction

B. Model Plants

C. Cleaning Solvents

D. Fountain Solution
   1. General
   2. Emissions

E. Inks

F. Add-on Controls
   1. General
   2. Thermal Afterburners
   3. Catalytic Afterburners
   4. Condenser Filters

G. Control Device Compliance Testing (EPA Method 25 and 25A)

H. Conclusion

II. Critique of Document Text

I. Overview

Introduction

The Environmental Conservation Board of the Graphic Communications Industries (ECB) is an intra-industry organization for environmental affairs representing the printing industry. Printing is one of the nations's largest industries, with over 50,000 commercial printing establishments (excluding the newspaper industry) and more than 800,000 employees. Although large in total size, the industry is mainly comprised of many small entrepreneurial businesses, with 80% of all printers having 20 or fewer employees.

The ECB would like to thank the United States Environmental Protection Agency and in particular the Chemicals and Petroleum Branch, for the opportunity to comment on the September 6, 1991 draft Control Techniques Guideline for Offset Lithographic Printing (CTG) at this stage in its development. The ECB appreciates the willingness of the Agency to work with industry experts in the development of this important document. ECB hopes that the comments contained herein will prove useful and stands ready to continue to work with the Agency in the further development of the CTG.

The preliminary draft version of the CTG presents an attempt by the Environmental Protection Agency (EPA) through its contractor, Radian Corporation, to characterize all aspects of the lithographic printing industry and propose reasonably available control techniques (RACT) for controlling VOC emissions from existing sources, consistent with existing technology and practices. Although this draft describes some processes and emission reduction techniques accurately and in reasonable detail, it unfortunately contains a number of inaccuracies, errors, omissions, lacks substantive evidence to support key points, and appears to rely heavily on undocumented claims.

Outlined below are the areas that the ECB believes must be revised. In several areas, quantitative evidence is not available to document process modification or material reformulation or substitution. However, EPA is urged to review and present the evidence which has been subjected to scrutiny through publication, testing, and industry experience in preference to the word of mouth and undocumented claims that make up such a large portion of this document. This approach would be consistent with EPA's stated new approach to environmental management that includes "...a more rigorous reliance on sound science to support EPA's environmental protection mission...". (Stephen A. Lingle, Deputy Director, Office of Environmental Engineering and Technology Demonstration, USEPA, plenary address to the 1991 Materials Research Society Spring Meeting, printed in the July 1991 MRS Bulletin).

This draft document addresses the three main VOC emission sources in lithographic printing which are ink, fountain solution, and

cleaning solvents and recommends methods to reduce these emissions based on a number of "model" plants. The ECB comments discuss these VOC emissions sources, the reductions methods (technologies) proposed in the draft CTG, EPA's suggested deemphasis of technologies and emphasis of control levels, and suggestions for revisions to the draft. It is imperative that EPA recognize the differences among the lithographic processes employed by the industry segments and establish control levels appropriate to those different material needs. (The industry comments below reference the page numbers, in brackets, of the September 6, 1991 draft CTG.

Model Plants

With three exceptions, the model plants outlined in Tables 3-1 and 3-2 [3-44, 3-45] appear to be reasonable examples of the various size lithographic printing.

First, the assumption of single blanket units for heatset web model plants denies the dominant position of blanket-to-blanket presses in this industry segment. As a result, the materials consumption, VOC emissions, and potential reductions are excessive.

Second, the press width of 38" applied to all facilities other than newspapers is inconsistent with the data in Figures 3-7 and 3-8 [3-14, 3-15], which would indicate that a 22" or narrower width is more realistic for the smaller facilities.

Third, all facilities are assumed to operate 3,000 hours per year. ECB believes that the following values of 1,500 hours per year is more realistic for smaller one shift facilities; 3,000 hours per year for two shift (medium sized) operations; and 4,500 hours per year for the largest facilities. These more realistic values should be used to calculate materials consumption, add-on control device costs, and cost effectiveness of control presented elsewhere in the CTG.

The materials consumption data in Table 3-3 [3-47] and elsewhere should also be revised to indicate that large heatset and some sheetfed lithographic printers in addition to newspapers, have either lowered or replaced isopropyl alcohol in fountain solutions with substitutes. The data presented greatly overstates VOC consumption for fountain solution by tens or hundreds of tons for larger printers.

Cleaning Solvents

Low VOC cleaning solutions are proposed as a means of reducing emissions [2-7]. The draft CTG is recommending water-based cleaning materials. The industry assumes that EPA will not recommend the use of exempt compounds to achieve the 30% VOC limit. No evidence is presented to substantiate the claims of these products actually working and/or lowering VOC emissions. It is later stated [3-42] these cleaners have been found to be

inferior to solvent cleaners. It is acknowledged that several problems are reported with water-based cleaners. If low VOC materials are to be recommended as cleaning solvents, more rigorous substantiation other than one performance claim must be included in the CTG. As currently proposed, the document only states that low VOC materials exist, but they may or may not work.

If use of these materials requires more frequent cleanings, larger volume use per cleaning, or longer cleaning time, a real reduction in VOC emissions may not occur. Also, if highly volatile organics are used in a low VOC cleaner, emissions from the cleaner's use may actually result in an increase in total VOC emissions, due to rapid or even complete VOC evaporation, relative to a 100% VOC cleaner with a lower vapor pressure. Low volatility organic solvents with vapor pressures below 45 mm Hg at ambient temperature evaporate quite slowly and may leave the cleaning process primarily as liquid solvent which can be collected or remains absorbed in the cleaning rag, rather than as air emissions.

Distinctions must be made between blanket washes and press cleaning solutions. The physical requirements between the two types of cleaning differ which will also affect operations and productivity. The document does not distinguish between the cleaning requirements demanded by the various ink systems considered. For example, removing news ink from ink rollers can usually be accomplished with a lower VOC content material than removing sheetfed inks. Difficulty of cleaning is dependent upon the viscosity of the ink (e.g., as the viscosity of the ink increases, the effort required for roller, blanket, and press cleaning also increases).

The information in Table 6-9 [6-17] is based on costs of $0.69 and $0.91 per pound for equal consumption of 100% and 30% VOC materials, respectively. Since it is not clear that effective cleaning can be performed with the untried 30% VOC cleaners, the additional cost of low VOC cleaner may be higher thereby resulting in lower emissions reductions. Additional data is needed to support the contention that a one-for-one replacement can be made and that no additional production time will be lost due to ineffective cleaning.

Although consideration has been given to the benefits of using untested, low-VOC cleaners [3-40], the replacement of current organic cleaners with substitutes of lower volatility is not discussed. The South Coast Air Quality Management District (SCAQMD) has recognized the benefits of a low vapor pressure cleaning solvent in its recently finalized Rule 1171, Solvent Cleaning Operations, which supersedes Rule 1130, and limits solvents used in cleaning lithographic printing equipment to no more than 900 g/l VOC and total VOC vapor pressure to less than 25 mm Hg. This limit is considered by SCAQMD as acceptable VOC emissions reduction technology. SCAQMD has chosen not to require water-based cleaners for offset printing due to difficulties

associated with using them. EPA is urged to consider this approach in the CTG [4-19].

Furthermore, emissions from cleaning solvents are described as being equal to the consumption of the VOC components of these materials [2-9]. This assumption is not correct. A high percentage of the cleaning solvent used with automatic cleaning equipment is transferred to the substrate and in the case of heatset presses it is transported to the dryer for capture and control. With a typical low volatility cleaning solvent, 50% or more of the solvent may be ultimately controlled. For manual cleaning operations, a substantial portion of the solvent is recovered as liquid waste or remains on the cleaning rag. For lower volatility solvents, this may account for as much as 80% of the solvent consumed.

Another aspect of the issue which has not been fully considered is the potential effect on the handling and disposal of liquid wastes. The move to water-based cleaning materials creates expensive treatment options. The avenues for disposal of liquid wastes are either treatment or incineration.

Since there is an ever increasing tightening of sewer discharge limits, the options for disposal are either expensive treatment equipment or incineration. Neither waste water treatment nor incineration are economical. Unlike 100% VOC cleaners that are well suited for incorporation into fuel blending operations because of their high BTU value, water-based cleaners do not offer an attractive fuel for these operations. Additional energy will be required for the incineration of water-based wastes. It has been estimated that disposing water-based materials via incineration costs three times more than the comparable solvent-based materials. EPA is urged to consider the financial costs, additional energy requirements and transfer of media associated with requiring the use of water-based cleaners.

It is not clear why a method to monitor VOC content in cleaning solutions [7-10] is necessary. Accurate measures of potential VOC emissions can be simply calculated by using cleaning solvent consumption records and applying the appropriate factors for disposal and/or captured emissions.

The use of d-limonene-based cleaning materials should be deleted. In a January 1990 report issued by the National Toxicology Program, d-limonene was reported as showing clear evidence of carcinogenic activity in male rats.[1]

Fountain Solution
---

1. U.S. Department of Health and Human Servies, National Toxicology Program, Technical Report Series No. 347, Toxicology and Carcinogensis Studies of d-Limonene in F344/N Rats and $B6C3F_1$ Mice, January 1990.

General

Taken out of context, the statement at 3-39 that isopropyl alcohol is a crutch to printers can be misleading. For certain printing jobs, the required print quality can only be obtained when isopropyl alcohol is used in the fountain solution. As stated in Chapter 4 [4-19], certain applications such as sheetfed printing may not be able to reduce or eliminate isopropyl alcohol as readily as other branches of the industry.

Statements are made about isopropyl alcohol consumption reductions with refrigerated fountains and through the use of magnets [2-5, 2-6]. Although refrigeration of fountain solution will reduce isopropyl alcohol evaporation due to vapor pressure reduction, the actual emissions reduction will be a function of fountain temperature and isopropyl alcohol consumption on-press. The assumption that all isopropyl alcohol is evaporated at the printing unit, with none of the material carried through the process is not correct (5-7, ref. 15). Published studies on both sheetfed and web presses indicate that more than half of the fountain solution is transferred to the substrate and in the case of heatset printing, a significant portion will be carried into the dryer and exhausted to the pollution control equipment.[1]

The data in Table 5-3 [5-9] shows cost savings associated with use of isopropyl alcohol substitutes and VOC reductions (as in Table 5-1 on page 5-3). The basis the data used to derive the 17% average isopropyl alcohol level is both in doubt and somewhat dated. The 1986-87 survey conducted by NAPL (3-51, ref. 26) resulted in a 15% average for 1986. ECB believes that the average concentration for printers using isopropanol is now lower as most larger heatset and some sheetfed facilities have already switched to isopropyl alcohol substitutes. There are no readily available cost savings or VOC reductions from fountain solution for these facilities. The survey's performed by Radian may provide some insight.

A device purporting to reduce the surface tension of fountain solution by "magnetizing" the water is suggested [2-6, 2-10] as a means of reducing isopropyl alcohol consumption. Such a claim should be verified by experimental methods based on a pre-approved protocol.

---

1. Karttunen, S. and Lindquist, V., "Water Flow and Surfactant Effects in Offset Lithography", Advances in Printing Science and Technology, Vol. 15, Ed. W.H. Banks, Pentech Press, London, pp. 176-199.

Lindquist, V., Karttunen, S., and Virtanen, J., "New Models for Offset Lithography", Advances in Printing Science and Technology, Vol. 16, Ed. W.H. Banks, Pentech Press, London, pp. 67-96.

Additionally, certain dampening systems are described [4-18] as working best with lower concentrations of isopropyl alcohol due to the surface tension reducing properties of the brush or spray used to apply the fountain solution. Again, unique physical properties are attributed without proper documentation. Actually, a brush and a spray generate new water/air interfaces with the maximum surface tension, i.e. they act to increase not decrease the instantaneous surface tensions of water solutions.

Other sections on magnets [4-17, 5-11, 6-15] and the data in Table 6-8 [6-16] should be deleted unless the claims of magnetic treatment can be substantiated. Also, section 5.2.5 [5-9] should be eliminated since the effect of isopropyl alcohol concentration on emissions has already been discussed in section 5.2.3.

Although EPA accepts that magnets can change the properties of water, it remains skeptical that print quality may suffer when isopropyl alcohol concentrations are reduced in fountain [2-10]. Data derived from laboratory and pressroom studies previously submitted by GATF indicates that the units do not work[1]. Additional laboratory and pressroom data resulting from other studies agrees with GATF's conclusion [2].

It is not clear what rationale was used to discount lost production due to the change from isopropyl alcohol to substitutes [6-13]. Whether a plant operates 16 or 24 hours per day should have little effect on the amount of lost production due to this change.

Emissions

Emissions from fountain solution are described as being equal to the consumption of the VOC components of these materials [2-8, 5-7]. Several fundamental concepts regarding these materials are not considered. Isopropyl alcohol substitutes and, to a lesser extent isopropyl alcohol, do not totally evaporate at the printing unit. Substantial quantities are transferred to the substrate where a percentage may be retained or in heatset operations the majority is driven off and captured in the dryer exhaust for transport to the pollution control equipment. Of the low volatility isopropyl alcohol substitutes such as ethylene glycol and glycol ethers, in excess of 75% of the fountain

---

1. Letter to Berry, James, EPA, Research Triangle Park, N.C., from Schaeffer, W.D., Graphic Arts Technical Foundation, Pittsburgh, Pa., May 15, 1991.

2. Letter to Berry, James, EPA, Research Triangle Park, N.C. from Schaeffer, W.D., Graphic Arts Technical Foundation, Pittsburgh, Pa., August 21, 1991

solution VOC is either retained or captured in a heatset operation. It is expected that these materials are also retained in sheetfed printed products.

Using the basis of 17% isopropanol in the fountain solution and the value of 1.7% VOC using isopropyl alcohol substitutes, combined with the much lower (1/4) evaporation of the substitutes, it would appear that a 40 fold (rather than 16) reduction in VOC consumption is attainable [4-18]. The lower evaporation rate of the substitutes also means that fugitive emissions should be reduced substantially, such that total VOC emissions from fountain solutions used on presses with oxidizers should be on the order of 1-5% of similar presses using isopropyl alcohol. A blanket application of a factor of ten reduction in isopropyl alcohol substitute use vs. isopropyl alcohol [5-11] is not justified for all printing systems. Although a 90% or greater reduction in VOC use may be obtained in certain systems, this is clearly not to be applied across the board as a 90% reduction in VOC emissions.

The references to 75% VOC in isopropyl alcohol substitutes [4-18, 5-7] are inappropriate. VOC content of substitutes varies from one product to another. The 0.75 factor in equation (5) [5-7] should be replaced with a generic term such as "%VOC in concentrate divided by 100%".

The claim of 44% isopropyl alcohol reduction with refrigerated circulators is presented. [4-15]. The use of the 0.44 reduction factor for the use of all refrigerated fountain solution systems [5-11] is inappropriate because there are other considerations beyond the fountain solution temperature that influence alcohol concentration (e.g., coverage, water quality, speed of the press, type of dampening system, and substrate).

Inks

In discussing soybean oil inks [3-37], EPA should recognize that other vegetable oil inks besides soy oil have been and are being utilized. Replacement of petroleum with soy, although reducing the petroleum content, does not necessarily result in any significant reductions in VOC emissions in nonheatset printing. Data in Table 5-1 indicate that the vast majority of emissions from no-heat printing results from fountain solution and cleaning solvent emissions. Assuming that the percent of petroleum oils retained in mixed petroleum/soy inks is the same as for 100% petroleum inks, replacing 75% of the petroleum oil with soy would result in emissions reductions of only 6.75 tons of emissions for plant B-IV (<1% overall reduction), 1.5 tons (4.5%) for C-IV, and 24 tons (12%) for D-VI.

In discussing reactive curing inks [3-38], it should be made clear that VOC emissions from these materials will be essentially zero. VOC content from a Method 24 analysis might indicate a relatively high VOC content in the uncured material, but as applied, the emissions are negligible due to polymerization,

rather than evaporation in the curing process. Use of these materials is restricted to a few special applications.

Add-On Controls

General

The VOC reductions from heatset operations with add-on controls shown in Table 5-2 [5-6] are misleading due to the omission of the amount of VOC from fountain solutions and cleaning solvents being controlled. By tabulating the reductions only from ink, the benefit of add-on control is understated. Add-on controls may substantially reduce emissions from these other sources, which will favorably alter the economics and environmental benefit of these controls. Tables 5-3 and 6-4 also need to be revised to reflect this aspect of add-on controls.

The capital costs, annual costs and cost effectiveness in Tables 6-2 [6-6] and 6-3 [6-7] need revision. They should be based on more realistic materials consumption data, suggested changes (see below) in device efficiencies, and in the case heatset include emissions from sources besides ink, such as cleaning and fountain solutions, being at least partially controlled. In addition, these two tables should contain identical capital and operating costs. Also, further cost justification is required to explain apparent incremental cost discrepancies for the different model plants. For example, the relative costs of plant A-II vs. A-I are >100% for a thermal afterburner, 50% for catalytic, 90% for condenser filter with carbon and 90% for condenser filter. It is not obvious how the equipment was sized for these example facilities nor how capital and operating costs were calculated.

Additionally, the determination of capital and operating costs associated with the various model plants is not clearly defined [6-10]. For example, the largest heatset model plant (A-IV) is described as a 30,000 scfm facility [6-10]. Yet elsewhere [6-5], it is stated that additional incinerators were costed for flows above 50,000 scfm. A critical review of costs calculated in the CTG can only be performed if the capital costs and configuration of the system(s) is identified. For example, significant cost differences can be expected if pollution control equipment for plant A-IV consists of three 10,000 scfm devices as opposed to one 30,000 scfm control.

The basis for the scaling factors in the cost analysis [6-5, 6-9] is unclear. These factors should be more fully explained to allow critical evaluation of the calculated costs.

NO_x emissions from afterburners was only briefly mentioned [6-18]. ECB recommends an analysis of increased NO_x emissions resulting from operation of thermal afterburners at 1600°F (vs. 1350°F) be included.

No consideration is given to other emissions concerns such as the control of odor by add-on controls [6-18]. Obviously, in

sensitive areas, odor concerns may come into play. For odor control, thermal oxidation is the method of choice.

Thermal Afterburners

The draft CTG does not discuss the use of regenerative thermal afterburners for controlling emission from printing operations. Although these devices are relatively new to the printing industry, a discussion of their operation, destruction efficiency and costs should be included.

An efficient recuperative thermal afterburner does not require a residence time of 0.75 seconds at 1400°F for complete oxidation [4-6]. Operation at 1350°F with a retention time of 0.50 seconds will provide a high level of control if the system is designed with enough turbulence and flame contact. Moreover, operation at elevated temperature will increase energy consumption, increase NO_x emissions, and reduce equipment life with no detectable increase in VOC destruction.

The basis for the residence time and combustion chamber temperature for thermal afterburners [4-6] refers to several input materials that are totally foreign to offset lithography. Materials such as C_1 to C_5 alkanes and olefins, chlorinated organics and nitrogen containing compounds are not typically used. Thermal afterburners for printing are not to be considered analogous to hazardous waste incinerators. Recuperative thermal afterburners operating at 1350°F and residence time of 0.5 seconds have been demonstrated to have outlet concentrations of less than 20 ppmv in offset printing operations. In the Illinois Federal Implementation Plan, EPA has recognized that a 90% control efficiency for afterburners constitutes RACT for heatset lithography (55 FR 26877).

By restricting operation of thermal afterburners to 3,000 hours per year for the model plants and requiring a 1600°F operating temperature [6-2], the costs associated with this control are made considerably higher.

Catalytic Afterburners

The statement is made [2-5] that "Incineration can achieve approximately 98% control of VOCs". While thermal afterburners may provide a very high level of control over an extended timeframe catalytic afterburners will show gradual degradation in performance over time due to deactivation, masking, or poisoning of the catalyst (as noted on page 4-9). Therefore, even if a system with new catalyst may destroy 98% of the VOCs initially, a decrease in destruction efficiency should not be unexpected. If the CTG is to take the position that 98% control by catalytic afterburners is the minimum acceptable control efficiency, the operating costs of the systems must be substantially increased to reflect the additional costs of frequent catalyst replacement which will be necessary to maintain this high level of control. A more realistic approach would be

to establish 90% control as the reasonable minimum efficiency for these systems. This level of control has been recognized by EPA as RACT for heatset lithography as part of the Illinois Federal Implementation Plan (55 FR 26877).

A blanket statement that an unspecified catalyst operating at 840°F with a bed volume of 0.5 to 2 ft^3 per 16.8 scf/sec can achieve 95% destruction efficiency [4-10] is not correct. In any given catalytic system, the operating temperature and space velocity requirements are catalyst specific. Again, even though a 95% control may be achieved initially, catalyst degradation over time will lower this number. A lower control efficiency would be consistent with the projected 2-5 year catalyst lifetime suggested on page 4-10.

Condenser Filters

The discussion of condenser filter systems [2-5, 4-14] states that up to 97% control can be achieved with these devices and also suggests the use of carbon canisters coupled with these devices may increase efficiency. The stated efficiency of condenser filter systems of 90% (95% with carbon) [4-14] are unrealistically high. Although they provide acceptable VOC control, the levels stated here, either with or without carbon, are substantially in excess of normal efficiencies. Since these devices are relatively ineffective at controlling captured fountain solution and cleaning solvent VOCs, the performance of the condenser filter equipment is overstated.

Although the condenser filters do not offer comparable reduction efficiencies to afterburners, there are some distinct advantages when capital and operating costs are considered. They also do not directly contribute to the formation of NO_x and CO_2. The lower removal efficiency has been recognized by EPA in its most recent determination of RACT for these devices which is set at 75% control of the non-isopropyl alcohol portion of dryer exhaust. The RACT determination was part of the Illinois Federal Implementation Plan at 55 FR 26877.

Condenser filters are most efficient with high inlet concentrations and low outside air temperatures. These conditions are important because the VOC concentration in the exhaust of a system (before the carbon) will be at steady state concentration determined by the properties of the VOCs and the ambient environmental temperatures. If all other factors remain the same, reducing the inlet concentration to the device will not necessarily have any effect on the outlet concentration due to the steady state oil concentration within the unit since this control technology is subject to influence by seasonal variations in ambient air temperature. An increase in the outside temperature will result in an increase outlet temperature and, accordingly, a higher outlet VOC concentration. If this technology is to be considered, a more complete analysis of the process is required, including the function and effectiveness of control of fountain and cleaning solution VOCs.

Condensed ink oil from a dryer still has a very strong "burnt oil" odor from the smaller cracked molecules. Carbon filters can help reduce the uncondensible odors, but the carbon must be monitored on a daily basis so that it can be regenerated before the odor breakthrough is noticeable.

Although cleanup efficiencies are usually better when ambient temperatures are lower, sometimes very rapid cooling can cause submicron aerosol particulate formation. These submicron particles tend to pass through the filter and carbon bed.

The contention in Table 6-3 that condenser filter systems require less maintenance than either catalytic or thermal afterburners is incorrect. Just the opposite is true. Based on industry experience, the condenser filter systems require the most maintenance of the three add-on control systems. Although steam desorption is impractical (See Comment 3, Appendix C) Table 6-10 [6-20] does not contain the energy costs or emissions associated with installation and operation of the steam generating capacity required for regenerating the carbon beds on condenser filter systems. The table should be revised to reflect these costs. Footnote d has a steam factor of 3.5 lbs of steam/lb carbon. This appears to be the annual consumption, based on data in Table 6-3 and the 5-year carbon life stated on page 4-14. (A 3000 scfm system requires about 4750 lbs of carbon and 17,200 lbs of steam.) It is unclear how frequently steaming must occur and the amount of steam that is required per steaming.

There appear to be some unfounded generalizations in the environmental impact section which can be misleading [2-15]. For example, use of oil collected in condenser filter systems to replace fuel in dryers may be more complicated than simply burning the material. State regulations governing disposal of this liquid may require the printer to test the oil, possibly obtain a RCRA Part A and B permit (required of all treatment storage and disposal facilities), and manifest the material as a hazardous waste, precluding its use for fuel. Additionally, the cost of modifying a dryer to burn this fuel in combination with gas has not been included. Although a value of $0.63/gal for recovered oil [C-38] has been used to calculate cost for these systems based on its use to fuel the dryers, the actual value or sale or cost for disposal of this material will significantly lower the economics of this technology.

The potential water pollution problems of high molecular weight oil combined with water in condenser filter systems appears to be understated [2-15. 6-21]. Oil-contaminated water from these systems may require extensive treatment before it can be discharged.

Other Issues

The discussion of EPA Methods 25 and 25A [7-6] states that Method 25 is not applicable to concentrations below 50 ppm and that

Method 25A is not recommended for incinerators (where the outlet concentration should be below 50 ppm). No recommendation is made as to appropriate methods for compliance testing of afterburner systems. The industry does not agree that Method 25 should be recommended as the best test method for determining emissions from dryer exhausts. The method is cumbersome, expensive, and provides inconsistent results and is not suitable for measuring control device efficiencies, especially those with outlet concentrations at or below 50 ppmv as C_1.

It must be emphasized that steady-state conditions in the heatset industry are normally less than one hour for single press operations. For multiple press exhausts into a common control device, steady-state conditions may never exist, much less for the three one-hour periods as required for a Method 25 protocol. Presses' frequent starts and stops and changes in operating speeds greatly affects flow rates and concentrations of exhausts reaching the control dévice. Thus it would be very helpful if there could be more flexibility in the required one hour steady-state sampling time.

Method 25A should be the recommended method especially for control device exhaust emission concentrations of 50 ppmv or less as C_1. By utilizing simultaneous inlet and outlet analyzers, instantaneous efficiencies can be determined, regardless of changes in press operating conditions. It may also be recommended as a screening test for determining unknown concentrations from the outlets of emission control devices.

Reference is made [7-7] to a modification of Method 24 that is under development for VOC determination of fountain solution and cleaning solutions. ECB Respectively requests further detail concerning the modifications being considered. In the meantime, reference to and application of the method should be eliminated.

Summary

The recommendations for control technology, fountain solution and cleaning solvent [2-14, 2-15] must all be revised. Condenser filter systems with carbon can not routinely control VOC emissions at 95%. control device performance on a routine basis should be established at the 90% efficiency level. There is no evidence that suggested isopropyl alcohol concentration levels can be met by printers. It is entirely unclear what basis was used to determine what level of isopropyl alcohol is acceptable at sheetfed facilities or why a larger printer can necessarily function at an isopropyl alcohol level only half of what is required for smaller facilities. No mention is made of the use of low volatility cleaning solvent or emissions reductions obtainable through control or revised handling and/or cleaning procedures.

II. TEXT CRITIQUE of Preliminary Draft of Offset Lithographic Printing Control Techniques Guideline

Table of Contents, p. ii, Title for 2.5.6:
Make "Emission" plural

Table of Contents, p. ii, Title for 2.6.3:
Make "Emission" plural

Section 2.1, p. 2-1, par. 2, line 5:
The term "image plate" used extensively in this draft is not common the industry. The expression "lithographic plate" is recommended.

Section 2.1, p. 2-1, par. 2, line 9:
Transfer of the <u>ink</u> from the lithographic plate is recommended instead of "Transfer of the image....".

Section 2.2, p.2-2, par. 1, line 1:
Make the word "arrangements" singular (arrangement)

Section 2.2, p. 2-2, par. 1, line 3:
Insert the word "fountain" between..."dampening" and "system."

Section 2.2, p. 2-2, par. 5, last line (11):
Delete the word "color" and replace with "pigmentation".

Insert the words "inks for" between "than" and "other".

Section 2, p. 2-3, Figure 2-1:
Figure requires an impression cylinder.

Section 2.2, p. 2-4, par. 1, sentence 2:
Please provide reference.

Section 2.2, p. 2-4, par. 2, line 1:
Delete "printplate" and replace with "lithographic plate."

Section 2.2, p. 2-4, par. 2, line 5:
Delete "acids of buffer salts" and replace with "acids and buffer salts."

Section 2.2, p. 2-4, par. 3, line 1:
Isopropanol <u>has</u> <u>not</u> traditionally been used as the dampening aid. Isopropanol was introduced in the 1950s in conjunction with Dahlgren or return-flow type dampening systems. The isopropyl alcohol enables the fountain solution to spread on the ink form roll and be carried to the lithographic plate surface.

Section 2.2, p. 2-4, par. 3, last sentence:
Please cite reference.

Section 2.2, p. 2-4, par. 4, sentence 1:
Delete "paper pieces" and replace with "paper components."

Section 2.2, p. 2-4, par 1, sentence 2:
Delete the word "commercial" and replace with "single".

Section 2.2, p. 2-4, par 1, sentence 3:
Begin sentence with "Different cleaning solutions...".

Section 2.4.1, p. 2-5, par 2, first sentence:
Make the first sentence explicit heatset web offset lithographic printing.

Section 2.4.1., p. 2-5, par. 3, sentence 2:
Few dryers are equipped with combination burners adaptable for liquid fuels. Use as boiler fuel is more common.

This section states that condenser filter systems can achieve as high as 97% VOC removal efficiency, while 90% is typical. It further states that 95% can be guaranteed if carbon filters are added to the discharge. Actual experience does not confirm these efficiencies. Industry experience indicates lower levels of performance during sustained operations.

In addition, the type of test method used for testing condenser filters can have a bearing on the cleanup efficiency values. In many cases USEPA Method 5 is used and the oil is measured as if it were 100% particulate or condensed oil aerosol. In reality, it has been observed that about 15% of the oil can break down or "crack" in the vicinity of the dryer burner flame envelope. The cracking results in the creation of smaller more volatile molecules that do not condense well at ambient temperatures. These smaller molecules are still VOCs but they are not trapped in the Method 5 and therefore escape detection. When a Method 25 or 25A is used, the cleanup usually is not as high as a Method 5 result.

Section 2.4.1, p. 2-5, par. 3, sentence 2:
Delete "fuel for boilers" and replace with "fuel for dryers". Use in dryers has not proved acceptable.

Section 2.4.1., p. 2-5, par. 3, last sentence:
Carbon has been used in a number of ways to clean up hydrocarbon in the outlet. A supplier-specific "carbon canister" version should not be suggested as the norm.

Section 2.4.2, p. 2-6, par. 1, last sentence:
Delete the word "trays".

Section 2.4.2, p. 2-6, par. 2:
Deletion of the magnetic processing of lithographic fountain solutions is suggested because GATF, other laboratories, and printing plants have been unable to document any positive effects. References to 500 plants in this paragraph and 200 printing units (Section 4.3.2) are not compatible.

Section 2.4.3.1, p. 2-6, par. 1, last sentence:

Documenting the date of the 17 percent average is important because of the rapid decrease in isopropyl alcohol use by the industry. The 1986-87 survey conducted by NAPL resulted in a 15 percent average in 1986 (3-51, ref. 27). The 12 percent difference (15 vs 17) significantly effects the anticipated RACT VOC reductions.

Section 2.4.3.1, p. 2-6, par. 2, sentence 2:
The glycol ethers are classified as hazardous air pollutants and should be noted.

Section 2.4.3.1, p. 2-6, par. 2, sentence 2:
The term "Cellosolve" is a trade name for a specific glycol ether and should be replaced by that term.

Section 2.4.3.1, p. 2-7, par. 2, first sentence:
There are many different factors beyond the type of dampening system that influence the ability to reduce or totally replace isopropyl alcohol. For example, ink type, coverage, press speed, substrate, roller type and condition, and water quality all effect the transition to lower levels or substitutes.

Section 2.4.3.2, p. 2-7, par. 1:
Differentiate between blanket and press cleaners.
d-limonene is classified as a carcinogen for male rats.

Avoid the terms "non-toxic" and "nonhazardous" because of the absence of generally accepted definitions for them.

Section 2.5.1, p. 2-7, Table 5-1, p. 5-3:
Inclusion of single color heatset and nonheatset presses will reduce ink use significantly. The 77 tons annual usage is believed to be 35 to 50 percent too large for plants A-1 and B-1.

Section 2.5.1, p. 2-8, par. 2, sentence 3:
Provision should be made for waste and spoilage amounts in the ink use factors.

Section 2.5.2, p. 2-8, par. 1:
All of the fountain solution does <u>not</u> evaporate "after delivery to the printing plate." High speed photographs[1] and infrared reflectance studies[2] demonstrate the existence of fountain solution on the plate surface and transfer to the blanket.

No mention is made of waste and spoilage amounts in the ink use factors. Provisions should be made.

---

1. Ink-Water Balance, Parts I and II, Flint Ink Corporation, Detroit, Michigan.

2. Pyliotis, D. "Der Wasserhaushalt im Offsetdruck", FOGRA-Forschungsbericht 3.214, Munchen (1974).

The concept that no water or isopropyl alcohol is disposed is not correct. Printers routinely discard fountain solutions either on a predetermined frequency (i.e. weekly) or when it becomes contaminated.

Section 2.5.3, p. 2-9, par. 1:
The assumption that all cleaning materials are evaporated at the plant is not correct. Up to 80% of solvents used for roller or press cleaning are retained in the cleaning rags, collected as liquid waste for disposal, or may be controlled.

Section 2.5.4, p. 2-9, par.1:
Control equipment efficiencies should be representative averages not the maximums. For example, catalytic incineration should not be expected to achieve 98 percent efficiency on average.

Cleanup efficiencies in excess of 98% for catalytic afterburners is achievable with new systems, but can slowly drop to lower levels as the catalyst becomes masked or poisoned. Some manufacturers use a deep bead-type catalyst beds to help alleviate this problem. Nevertheless, a cleanup efficiency of 90% is probably more reasonable for longer catalyst replacement intervals, thus reducing operational costs.

The question of long term efficiency and economics of carbon canisters on condenser filters makes the 95 percent level suspect.

Section 2.5.5, p. 2-10, par. 1, sentences 1 and 2:
There is no theoretical or practical basis for the claimed effects of magnetism.

Section 2.5.6, p. 2-10:
In heatset web offset and sheetfed lithography, provision must be made for blanket cleaners which will dissolve blanket debris, that is, cleaners with VOC content approaching 100 percent. These cleaners will maintain productivity and minimize waste with the high viscosity inks[1].

Section 2.6.1, p. 2-11, par. 2, last sentence:
Not "fuel for the dryer" but "fuel for a boiler." "Fuel for the dryer" still exists in sections 2.5, 4.2.3.2, 6.1.1, 6.1.4, 6.4.2.

Section, in general, give no indication of economics in increased scale of emissions due to heat recovery, multiple

---

1. MacPhee, John and Gasparrini, C. Robert, "Test Run to Determine the Effect of Blanket Washing on the Concentration of Combustible Vapor in the Dryer of a Heatset Web Offset Press", TAGA Proceedings 1984, Technical Association of the Graphic Arts, Rochester, N.Y..

presses tied to single control units, etc.

Section 2.6.1, p. 2-11, par 3:
For control at 95% or higher it is likely that catalytic and thermal units might cost nearly the same since the catalyst would need to be replaced at least every two years. On the other hand, for control at the 90% level, catalytic units could tolerate a much higher level of poisoning and still achieve 90%.

Section 2.6.2.1, p. 2-12, par. 3, sentence 1:
The optimism in this sentence does not recognize the magnitudes of the costs of conversions, including spoilage. The projected annual savings, for example, in the sheetfed sector barely approach the values of single printing jobs.

The costs associated with higher roller maintenance, potential water treatment, and experimentation with new types of rollers need to be taken into consideration.

Section 2.6.2.1, p. 2-12, par. 4:
Anticipated material "savings" are overstated because they are based on reductions from an average isopropyl alcohol concentration of 17%. As previously described, ECB believes that the 17% average is not representative.

Section 2.6.2.2, p. 2-12, par. 1:
Again, VOC "reductions and savings" are overstated, because average isopropyl alcohol concentrations are based on the 17% average. Additionally, some sheetfed and heatset web facilities are currently using refrigeration as a means to reduce isopropyl alcohol consumption and for quality control purposes.

Section 2.6.2.3, p. 2-13, par. 1 and 2:
Delete entire section and references to magnetic processing of fountain solutions.

Section 2.6.3 p. 2-13, sentences 1 and 2:
Again, please define the term "non-toxic" as previously mentioned. No reference is made to the questionable technical feasibility of these cleaners in offset printing.

Section 2.7.1, p. 2-14:
Delete "95 percent" and replace with "90 percent".

Section 2.7.2.1, p. 2-14:
Delete "1.6 percent" and replace with "8 percent". Delete "3 percent" and replace with "12 percent".

Section 2.7.2.2, p. 2-14, par. 1 and 2:
No basis for the proposed two levels of isopropyl alcohol concentrations is presented. The discussion is arbitrary and not reasoned. Dampening requirements for sheetfed printing are dictated by the types of presses, dampening systems, and work or jobs being printed. These factors do not change with the size of the pressroom and its equipment.

In paragraph 1, delete "6 percent" and "10 percent" and replace with "10 percent" and "15 percent", respectively. In paragraph 2, delete " 3 percent" and "5 percent" and replace with "10 percent" and "15 percent", respectively.

Section 2.7.3, p. 2-15:
Industry needs separate provisions for blanket and press cleaning solutions at least for heatset and sheetfed lithography. Blanket cleaners require high VOC concentrations as discussed in Section 2.5.6 comments.

Section 2.8, p. 2-15, par.1, sentence 1:
Insert the word "heatset" between "from" and "offset".

Section 2.8, p. 2-15, par. 2, sentence 2:
Distinction needs to be made between catalytic and thermal incineration in the generation of NO_x. Emissions of NO_x is typically twice as high with thermal incineration and increases with increasing temperatures.

Section 2.8, p. 2-15, par 3:
The problem of waste disposal of recovered "gunk" and oil contaminated water in condenser filters should not be minimized. It can be a major factor. Health related issues of dealing with recovered waste and equipment cleanup can also be a consideration.

In sentence 3, delete "(imperceptibly)".

Section 2.9, p. 2-15, par. 1, sentence 2:
Does "Exhaust from heatset ink drying...." mean "Controlled exhaust from...."? If so, please be explicit.

Section 2.9, p. 2-16, par. 2, sentence 1:
The comparison is suspect because the model heatset and non-heatset web presses are assumed to consist of single units ("single blanket"); whereas, newspaper presses consist of "double blanket" units. Ink consumption is assumed to be directly proportional to the number of units.

Section 3.1, p. 3-2, par. 2, sentence 2:
Delete the words "March, April, and May of"

Section 3.1, p. 3-2, par. 2, sentence 1:
Include screen printing.

Section 3.2, p. 3-2, par. 1 and 2:
Delete "image plate" in the numerous uses and replace with "lithographic plate".

Section 3.2, p.3-2, par. 2, sentence 1:
Delete "ink reservoir" and replace with "ink fountain".

Section 3.2, p. 3-2, par. 2, sentences 2, 3, and 4:

Delete "image" and "image plate" and replace with "ink" and "lithographic plate", respectively.

Section 3.2, p. 3-2, par. 3, sentence 1:
Insert the word "generic" between "two" and "types".

Section 3.2, p. 3-2, par. 3, sentence 2:
Revise to read: "...a heated dryer to evaporate ink oils and cause the printing inks to set and dry.".

Section 3.2, p. 3-3, par. 4, sentence 3:
The scope of sheet-fed lithography is much too narrow. Sheetfed lithography is the source of all types of commercial printing, e.g., periodicals, advertising, books, business forms, brochures, folding paper boxes and metal decorating. Large volume production jobs require the economics of higher speed web processes.

Delete the word "specialized"

Section 3.2, p. 3-3, par. 4, last sentence:
Delete "individual sheets of"

Section 3.2, p. 3-4, par. 1:
Population of weekly newspapers is in excess of 7000 with some 3100 having presses, usually single web width newspaper presses. They require consideration and inclusion in the CTG.

Section 3.2, p. 3-4, par. 1 and Figure 3-1:
The data appears to indicate a total of newspaper facilities that is larger that the 1,626 noted in the text, the right hand column should be labeled as ">250,000", and the footnote gives a 31/67% split on morning and evening papers which totals only 98%.

Section 3.3, p. 3-4, par. 1, lines 6, 7 and 8:
Delete the word "approximately"

Section 3.3.1.1, p. 3-4, par. 2, sentence 2:
Revise to read: "... one blanket per unit.".

Section 3.3.1.1, p. 3-4, par. 2, sentence 3:
Revise to read: "... Two blankets per unit although...".

Section 3.3.1.1, p. 3-4, par. 4, sentence 1:
For a CIC press and the consistency of terminology recommend that the five printing systems be referred to as "units" and the total assembly of five units be a "couple."

The description of the CIC press implies that this type of press may operate as a perfecting press. This is physically impossible based on the design of the press.

Section 3.3.1.1, p. 3-7, par. 1, sentence 2:
As suggested previously, interchange the words "units" and "couples" for consistency and extended calculation.

Section 3.3.1.1, p. 3-7, par. 1, sentence 3:
Revise to read: "... printing sequentially up to five colors on one side of the web...".

Section 3.3.1.1, p. 3-7, par. 3:
This and the following paragraph together with Figures 3-5 and 3-6 deal with the number of presses operated by given percentages of companies. Press models, however, deal with the number of units in plants. One additional step could facilitate the comparison between models and industry profiles.

Figure 3-3, p. 3-8:
Change this illustration to one of a lithographic CIC press.

Section 3.3.1.2, p. 3-12, par. 1, sentence 2:
Cylinder gap width comparison between web and sheet presses has no utility for present purposes.

Section 3.3.1.2, p. 3-12, par. 1, last sentence:
They may have infrared sources to accelerate ink setting.

Section 3.3.2, p. 3-12, par. 2 and 3:
Press size is described by the length and circumference of the press cylinders, not the "maximum length and width of the paper."

The discussion of press size interchanges the definition of length and width, at one point defining width as the circumference of the cylinder and later using it in the traditional across the cylinder dimension. The text should be clarified to use the term width in the latter context and cut-off length (or length) in the former.

Delete all references in this paragraph to the dimensions and orientation of the job on the press because most of the current description is incorrect or confused.

Section 3.3.2, p. 3-13, par. 3, line 1:
Delete the word "determine" and replace with "determines"

Section 3.3.2, p. 3-13, par. 3 and 4:
Confusion is again created by the attempt to omit perfecting presses or to equate a printing couple on a heatset web offset press to a single press unit instead of the two printing units involved. The importance involves both materials and consumption per press unit and the costs of process modification for each unit, i.e., a five couple heatset press involves ten printing units.

Section 3.4.1.1, p. 3-13, par. 1, sentence 2:
Change "web" to "roll."

Section 3.4.2, p. 3-20, par 1, sentence 2:
Delete "image plate" and replace with "lithographic plate".

Insert the word "usually" between the words "plate" and "first" because exceptions exist in Dahlgren type dampening systems.

Section 3.4.2, p. 3-20, par. 1, last sentence:
Begin sentence with "The lithographic plate then..."

Section 3.4.3, p. 3-23, par. 2 and 3:
Move the last sentence in paragraph 2 to the last sentence in paragraph 3 and revise to read: "The anilox and injector inking systems are used principally on newspresses."

Section 3.4.4, p. 3-28, par. 1, sentence 2:
Delete "metering" and replace with "fountain".

Section 3.4.5, p. 3-28, par. 1, last sentence:
Delete "sets" and replace with "dries".

Section 3.4.5, p. 3-28, par. 2, sentence 4:
Delete "much" and replace with "controlled portions".

Figure 3-17, p. 3-29:
The "M" roll should be the "F" roll for fountain roll and a metering roll should be introduced tangential to the chrome roll.

Section 3.4.5, p. 3-32, par 2, sentence 1:
Delete "270" and replace with "220."

Section 3.4.5, p. 3-32, par. 1, sentence 2:
Change "burning much" to "oxidizing some of the oil." The original statement may have been true for direct flame dryers, but is not the case in hot air dryers. This point has caused confusion in application of the AP.42 retention factors to heatset printing in the past.

Section 3.5.1, p. 3-36, par. 1 sentence 3:
Insert "form a continuous film which fixes the "between" "Binders" and "aid."

Section 3.5.1.1, p. 3-36, par. 1, sentence 2:
Delete the word "inks" and replace with "ink vehicles."

Section 3.5.1.1, p. 3-36, par. 1, last sentence:
Insert the word "approximately" between "of" and "90°F"

Section 3.5.1.1, p. 3-36, par 3, sentence 1:
Delete the word "solvent" and replace with "ink oil."

Section 3.5.1.1, p. 3-36, par. 3, sentence 2:
Delete the word "solvents" and replace with "oils."

Same change should be made in the last sentence in the section.

Section 3.5.1.2, p. 3-36, par. 1, sentences 1:
Revise to: Non-heatset ink oils have lower vapor pressures than heatset ink oils and the inks are not as viscous.

Section 3.5.1.2, p. 3-37, sentence 2:
Insert "to 8" between "4" and "hours"

Section 3.5.1.2, p. 3-37, par. 1, sentences 2, 4 and 5:
Delete the word "dry" in all three sentences and replace with "set."

Section 3.5.1.2, p. 3-37, par. 2, sentence 1:
Insert the words "in some newspaper inks" between "popular" and "for.."

Section 3.5.1.2, p. 3-37, par. 3, sentence 1:
Delete the word "another" and replace with "the major."

Section 3.5.1.2, p. 3-37, par. 3, sentence 3:
Delete "4" and replace with "8."

Section 3.5.1.4, p. 3-38, par. 2, sentence 2:
Infrared inks are <u>not</u> radiation curing inks.

Section 3.5.1.4, p. 3-38, par. 2, sentence 3:
Delete "cross-linking proprietary chemical components" and replace with "proprietary cross-linking chemical compounds"

Section 3.5.1.4, p.3-38, par.2, sentence 5 and 6:
Delete the word "mechanisms" and replace with "components."

Section 3.5.2, p. 3-39, par. 1, sentence 1 and 3:
Delete the word "printplate" and replace with "lithographic plate."
Delete the word "good" and replace with "competitive."

Section 3.5.2, p. 3-39, par. 1, sentence 3:
Change to "acids and buffer salts."

Delete the word "printplate"

Section 3.5.3, p. 3-41, par. 1 and 2 and the balance of the par.:
Once the distinction between blanket and press cleaners is established, as in the beginning of the second paragraph, then the distinction should be maintained throughout the section.

Par. 1, last sentence should start: "Blanket cleaning is required---."

Cleaning blankets, for example, once or twice a shift would be very infrequent in heatset web offset printing. The frequency is dependent upon many factors involved with specific printing jobs.

It is industry's experience that the more viscous the ink, i.e., sheetfed and heatset web offset, the more difficulty will be encountered in the cleaning and the greater the need for cleaner solvency to maintain efficiency.

Section 3.4.5, p. 3-34, Figure 3-21:
The figure needs further captioning to explain how the chill stand functions in the printing process.

Section 3.4.6, p. 3-32, par. 2, last sentence:
Revise as follows: "...of printed paper from the dryer by-passing the folder, moving through the sheeter and onto the delivery."

Section 3.5.3, p. 3-41, par. 5, sentence 1:
Delete the words "boiling", "flammable", and "greater" and replace with "flash", "ignitable", and "less", respectively.

Section 3.5.3, p. 3-42, par. 2:
Do not believe that proposed RACT cleaning solutions could function for UV or thermally catalyzed inks.

Section 3.6, p. 3-42, par. 1, sentence 1:
Delete the word "processes" and replace with "steps."

Section 3.6, p. 3-43, par. 2:
Models for heatset and nonheatset web offset omit consideration of single color (one to two unit) presses, a very common production unit. Total units should range from 1-6 in both models for very small plants.

Omission of perfecting presses eliminates probably the most common press in heatset web offset printing. Four printing couples with eight printing units and five couples with ten units are probably the most popular presses.

Using 3000 annual hours of operations for all models exaggerates equipment utilization for all but the largest plants. A graduated scale of operations ranging from single shift, approximately 1500 hours, to two shift, 3000 hours (in medium size plants), and to 45000 hours for the largest plant size probably constitute better levels of productivity.

Please see suggested revised Tables 3-1 and 3-2 in Appendix A.

Section 3.6.1, p. 3-46, par. 2, last sentence:
Clarify what is expected from plant records.

Section 3.6, p. 3-44, Table 3-1:
To attribute single blanket status to total units for Heatset and Non-Heatset Web Model plants seriously biases their comparison with single units in sheetfed and other presses.

Section 3.6.2, p. 3-47, Table 3-3:

A 30-40-fold increase in ink consumption per unit is postulated when comparing 4 total units for sheetfed with 4 units for heatset web offset. This does not make sense. Please refer to the discussion of p. 5-1, paragraph 1. In addition, alcohol use rates exceeding ink use rates in non-heatset web offset is very questionable for the industry segment.

Section 3.7, p. 3-49, references:

Reference number 5 needs updating, the 14th edition (1989) of the Pocket Pal is available.

Reference number 7 needs updating, the 5th edition (1988) of the Printing Ink Handbook is available.

Section 4.1, p. 4-1, par. 1, sentence 2:

Delete "where the solutions contains isopropyl alcohol" and insert the phrase "solution, which contains isopropyl alcohol (or alcohol substitutes)"

Insert "partially" between "are" and "driven."

Section 4.2, p. 4-1, par 1, last sentence:

Suggest deletion of "for reuse" since lithographic printers rarely reuse the recovered VOC.

Section 4.2.1-4.2.3.3: thru 4-14; p. 4-2 thru 4-14:

The description of the incinerators did not appear to be based on typical current design parameters or current technologies.

Section 4.2.1, p. 4-2, line 6:

Delete "ignition" and replace with "combustion"

Section 4.2.1.1 , p. 4-2 and 4-3, par. 1:

This document assumes that all thermal units use a combustion air source for burner performance. This can lead to erroneous data on operating cost both electrical and gas. Some incinerators use a raw gas burner. Fuel consumption can be about 35 percent lower for raw gas burners.

Section 4.2.1.1, p. 4-2 and 4-4:

The document assumes that over 0.75 seconds residence time and operating temperatures of 1600°F are necessary to achieve proper cleanup. Again, this can be expensive when calculating operational costs. For reasonable control with new equipment at 99% and at 95% in continuing service, a temperature of 1350 ^{o}F and a residence time of 0.5 seconds is sufficient. Recuperative thermal incinerators have a temperature limitation of about 1450 to 1500°F due to the metal heat exchangers. Changes to these levels as recommendations would allow for significant savings in operating costs.

Section 4.2.1.1, p. 4-4, par. 1, sentence:
If secondary heat recovery is used, note that appropriate equipment prices should be added.

Section 4.2.1.1, p. 4-3, par. 2, last sentence:
Please provide a reference.

Figures 4-1 and 4-2, p. 4-3 and 4-5:
Induced draft fans now rarely used.

Section 4.2.1.2, p. 4-6, par. 1:
Delete sentence referring to hazardous waste incinerators. This is not relevant to VOC control from lithography. Very questionable whether the kinetics of oxidation for C_1 to C_5 alkanes should be extrapolated to C_{12} and C_{18}.

A reference to the increased formation of NO_x, a photochemical reactant, as incinerator temperature is increased from 1400° to 1600°F should be included.

Section 4.2.1.2, p. 4-6, par. 2, sentence 1 and par. 3, p. 4-7:
States that all incinerators can obtain 98% destruction efficiency if operated at 1400° F. with a 0.75 second residence time. Not necessarily correct as some new units will not attain this value because of poor mixing or poor design.

Section 4.2.1.3, par. 1, p. 4-7, sentence 2:
First and only mention of "fluctuations in flows." Multiple press emission controls by a single incinerator requires a variable volume burner in conjunction with extensive valving which should be referenced.

Section 4.2.2.1, p. 4-7, par. 1, sentence 3:
No mention is made of mixed oxide catalysts.

Section 4.2.2.1, p.4-7, par. 2, sentence 2:
Delete "about" and replace with "above"

Section 4.2.2.2, p. 4-9, par. 2, sentence 2:
Masking is not completely reversible as this paragraph indicates.

Section 4.2.2.3, p. 4-10, par. 1:
Catalytic Oxidizer Efficiency. Suggest use of the term gaseous hourly space velocity (GHSV) rather then catalyst-to-vent ratio. For the example in this section the GHSV would be calculated as follows:

$$16.8 \frac{\text{sft3}}{\text{second}} * 60 \frac{\text{seconds}}{\text{minute}} * 60 \frac{\text{minutes}}{\text{hour}} = 60{,}480 \frac{\text{sft3 air}}{\text{hour}}$$

$$\frac{60{,}480 \ \text{sft3/hr}}{0.5 \ \text{ft3 catalyst}} = 120{,}960 \ (\text{hr-1})$$

Thus this section states a 96% VOC destruction rate at 840°F. operating temperature with a space velocity of 30,000 to 120,000 hr-1 GHSV. More typical is a space velocity of 9000 GHSV at 650°F. This low space velocity means that there is a larger volume of catalyst for each scfm of exhaust.

Replacement will be accelerated by frequent process cycling in heatset web offset printing which translates into frequent temperature cycling of the catalyst.

Section 4.2.2.2, p. 4-10, par. 2, sentence 2:
The reference to service life of a catalyst of being 3 to 6 months which is true for monolith units, but not for deep bed bead substrate design units. Some deep bed manufacturers provide a 30 month catalyst warranty even with normal levels of heatset poisons present and catalysts have been in lithographic service in excess of five years..

Section 4.2.3.1, p. 4-11, par. 1, last sentence:
Delete "or"

Delete "first drop of liquid is formed" and replace with "condensation can occur"

Section 4.2.3.1, p. 4-11, par. 2, sentence 2:
Delete the word "valuable"

Section 4.2.3.2, p. 4-14, par. 2 and 3:
A CTG requires actual experience, not "expected low solubility of organics" or a five year carbon life.

Section 4.2.3.2, p. 4-14, par. 4, sentence 4:
What would be done with a 3 shift operation? Too much conjecture with an unproved system. The system as described is not applicable to a 3 shift operation.

Section 4.2.3.3., p. 4-15, par. 1, sentence 2:
Delete the word "dryer" and replace with "boiler."

Section 4.3.1, p. 4-15, par. 2, sentence 1:
"Ink emulsification" can be fountain solution in ink or ink in fountain solution (tinting). Which is improved? Please say so.

Section 4.3.2, p. 4-17:
Delete entire section.

Section 4.4.1., p. 4-1, par. 1. sentence 2:
Delete "printplate" and replace with "lithographic plate."

Section 4.4.1, p. 4-18, par. 1, sentence 1:
Isopropyl alcohol use in lithographic dampening is <u>not</u> traditional. It was introduced by Dahlgren with the return flow dampening

systems designs in the 50s.

Section 4.4.1, p. 4-18, par. 1, last sentence:
The reference is to a survey conducted in 1986 by NAPL and the average then was 15 percent and not 17 percent. The current average is believed to have dropped since 1986.

Section 4.4.1.1, p. 4-18, par. 1, last sentence:
Your authority should be the printers, not the suppliers.

Section 4.4.1.1, p. 4-18, par. 2, sentence 2:
A brush and a spray generate new water/air interfaces with the maximum surface tension, i.e., they act to increase not decrease the instantaneous surface tension of water solutions.

Section 4.4.2, p. 4-20, par. 1, last two sentences:
Delete "lower volatility" and replace with "low volatility."

d-limonene is a carcinogen for male rats.

Section 4.4.2, p. 4-20, par. 2:
The feasibility of 30 percent VOC cleaning products has not been demonstrated and cannot be supported for RACT. Rule 1171 for the South Coast Air Quality Management District has been finalized and supersedes Rule 1130. Rule 1171 no longer requires the 30 percent or less VOC cleaning products.

Section 4.5, p. 4-21, Reference 3:
Delete the word "Tech" and replace with "Tec."

Section 5.1.1, p. 5-1, par. 1, sentence 2:
The 40 fold greater ink use rate for web than for sheetfed cannot be justified. Some of this difference, as explained previously, is due to the inclusion of two printing assemblies in a web printing unit, (preferably called a perfecting couple), but even a 20 fold difference in ink use rate is excessive.

Section 5.1.1, p. 5-1, par. 1, sentence 4:
Operating hours for model plants should be scaled from 1500 hours to 3000 hours in medium size plants and to 4500 hours for the largest plants reflecting the different equipment utilization and costs.

Section 5.1.2, p. 5-2, par. 1, sentence 1:
Insert the words "print and" between "...retained by the..." and "substrate."

Section 5.1.3, p. 5-4, par. 1, sentence 3 and p. 5-5, par 1., sentence 2:
Rather than quoting initial performance statistics for the emission control techniques, the CTG requires values representative of continuing performance levels.

Section 5.2.1, p. 5-5, par. 1, sentence 1:
Delete the words "blanket and" and change the word "print"

to "lithographic."

Section 5.2.1, p. 5-5, par. 2, last sentence:
No use of isopropyl alcohol is included in Table 5-2 since all tabulated VOC emissions are those from the inks. Is the reference to Table 5-3?

Section 5.2.2, p. 5-7, par. 1, sentence 2:
Delete the word "printplate" and replace with "lithographic plate."

Section 5.2.1, p. 5-6, par. 1, sentence 2:
Statement incorrect since the plate non-image area continuously carries a water film (evidenced by numerous studies, previously referenced) and much of the fountain solution is emulsified in the ink. Process studies of web printing referenced elsewhere have estimated the distribution.

Section 5.2.2, p. 5-7, par. 2, sentence 1:
The estimated average of 75 percent VOC is questioned. It seems unusual to have one absolute value given for all substitutes. A range of values should be provided.

Equation (5) should be revised to read "VOC emissions from alcohol substitute = Weight of alcohol substitute x %VOC in concentrate/100%"

Section 5.2.6, p. 5-11 and 5-12:
Suggest deletion on basis of previous comments.

Section 5.2 General:
Nowhere is the background developed for the use of brush or spray dampeners, particularly on web equipment to reduce the need for isopropanol.

Section 5.3.1, p. 5-12, par. 1, sentence 4:
To state that "the emissions are equal to the amount of cleaning solution used neglects the following:

(1) Blanket cleaning solution partially remains in the cloth and goes to recovery of waste.
(2) Blanket cleaning solutions on a heatset blanket go into the ink and into the dryer for emission to a control device.
(3) Press cleaning solution residues, i.e., roller washes, are put into tanks for recycling or waste disposal.

Provisions need to be made.

Section 5.3.2, p. 5-13, par. 1:
Cannot justify cleaning compound recommendation based on 0 to 30 weight percent VOC. Moreover, distinction needs to be made between the VOC needs for blanket and press cleaning as previously described for Section 2.5.6, p. 2-10.

Section 6.1.1, p. 6-2, par. 2, sentence 3:

This section implies that the emission control device costed for a given model is based on the match between the rated gas flows of the press dryers (note that these are not unit determined, but press dependent) and the control equipment design range. This leads to a fictional model of many press dryers with ducts and valving feeding into single control devices, but no apparent provision for the costing of these multiple controls.

Explicit development of the models for heatset web offset facilities are required if the CTG is to be intelligible to its audiences.

Table 6-1, p. 6-2:
Operating temperature of 1000°F for a condenser filter is not correct. Thermal incinerator temperatures should be 1400 °F. Catalytic incinerator temperatures should be 650 °F.

Operating temperatures of 1600°F for thermal and 900°F for catalytic afterburners must be revised to lower, more realistic values.

Section 6.1.1, p. 6-3, par. 4, last sentence:
Delete the word "dryer" and replace with "boiler."

Section 6.1.2, p. 6-4, par. 1, sentence 1:
The term "model plant dryer exhaust streams" is meaningless. The relation to the model plant press dryer exhaust streams needs to be defined. The relationship between numbers of presses and dryers is thoroughly confused (Table C-1, P. C-2) and does not correspond to industry practices generally.

Section 6.1.1, p. 6-3, par. 3, sentence 3:
The length of the ductwork and the cost are going to be determined principally by the number of press dryers to be connected to the emission control device.

No mention is made of costs associated with valving and automatic controls for adapting to changing flow rates as presses come on and off stream.

Section 6.1.2, p. 6-5, par. 2, sentence 3:
Operating and maintenance labor requirements better approximated at 1 hr. per week for both incineration methods.

Table 6-3, p. 6-8:
The table represents a number of misconceptions with respect to the differentials between technologies. The biggest areas of concern are maintenance labor costs being lower on condenser filter units than incineration units, and the cost of catalyst replacement. Four years catalyst life should be more representative than two years.

Section 6.1.4, p. 6-8, par. 1, sentence 4:
Adapting a press dryer for use of alternative fuels (other than gas) is expensive and unless a cost is allowed, no credit

should be given. Alternatively change "dryer" to "boiler."

Condensed ink VOCs, moreover, may be considered as hazardous waste in some areas with attended costs.

Section 6-4. p 6-10:
Remarkable that catalytic costs so closely approximate thermal on annual basis. The large magnitudes of changes for different size plants is suspect.

Section 6.2.1, p. 6-11, par. 2, last sentence:
It is questioned why changeover costs are recognized for a 24 hour per day schedule, but not for the 16 hour per day model plant analysis. Two crew operations are just as susceptible to costs as are three crews.

Section 6.2.3, p. 6-15, par. 1:
Suggest deletion of entire paragraph.

Section 6.2.1, p. 6-12, Table 6-5:
The savings estimated for heatset web offset printing are believed to be much too large principally because this industry segment has been using brush type dampeners to decrease the need for isopropyl alcohol.

Section 6.3, p. 6-15, par. 1, sentence 1, and Table 6-9:
Eliminate term "non-toxic."

No provision is made for increased time required for blanket cleaning, increased waste (printed paper and cleaning materials) and increased volume of cleaning solutions.

Table 6-8, p. 6-16:
Please delete entire table.

Section 6.4.1.2, p. 6-19, par. 4, sentence 2:
Delete initial part of sentence through "however."

Section 6.4.1.1, p. 6-18, par. 2, sentence 1:
Not a product of incomplete combustion.

Section 6.4.2.1, p. 6-21, par. 1, sentence 4:
Wastewater treatment plants may refuse to accept this waste in which case the printer may have to process the water or have it disposed by a waste hauler. Delete the last sentence because the risk is not negligible.

Section 6.4.1.3., p 6-21, par. 1, sentence 4:
The qualification of "equal quantities" has not been tested and seems doubtful.

Section 6.4.2.1, p. 6-21, par. 2, sentence 5:
The oils (not solvents) can be burned in the dryer only if expensive modifications are made. The oils are often acidic and require extensive filtration prior to them being burned. Burning

these oils may also introduce treatment, storage, and disposal issues with respect to state hazardous waste disposal regulations.

Section 6.4.3., p. 6-22, par. 1:
Detergents and emulsified inks will be water pollutants.

Section 6.4.4, p. 6-22, par. 1, sentence 3:
Natural gas is the principal fuel, not supplemental.

Section 6.4.4, p. 6-23, par. 2, last sentence:
Capital and operating costs for steam generation must be included.

Section 6.4.5, p. 6-23, par. 1, sentence 2:
Insert the word "heatset" between "model" and "plants"

Section 6.4.5, p. 6-23, par. 2, sentence 1:
Recovered oil by condenser controls cannot be used as fuel for dryers without modification of the dryer burner.

Suggest more appropriate summary such as:

Properly designed incineration equipment has remained the dominant means of VOC control in the heatset printing industry because of its low maintenance, its overall reliability, its high level of destruction efficiency, and its overall cost effectiveness.

Condenser filters have been used to a limited extent due to the perceived potential benefit of solvent recovery, lower NOx emissions, and lower fuel consumption; however, because of high maintenance, added cost of disposal of unusable waste oil and water, and unreliable cleanup efficiency this approach has not gained wide acceptance in the printing industry in states where compliance testing is required.

Table 6-10, p. 6-20:
Values for NOx emissions are very high for both incineration methods. Values should be checked with EPA publication AP-42.

Section 6.5.1, p. 6-25, sentence 2:
A relatively unproven emission control method without long-term performance records is not suitable for RACT.

Section 6.5.2.1, p. 6-25, par 1, sentences 1, 2, and 3:
Delete "1.6" and "3" percent and replace with "8" and "12", respectively.

Section 6.5.2.2, p. 6-25, par 1, sentence 1:
Delete with no more than 24 single blanket units (or 12 double blanket units)--" Delete "6" and replace with "10" percent.:

Section 6.5.2.2, p. 6-26, par 1, sentence 4:
Delete "10" and replace with "15 percent"

Section 6.5.2.2, p. 6-26, par 1:
Delete paragraph. No justification for different treatment of sheetfed pressrooms.

Section 6.5.3, p. 6-29, par. 1:
Requires independent treatment of blanket and press cleaners. Industry required higher VOC content cleaners to maintain efficiency and control waste.

Section 6.6, p. 6-28, Reference 21:
Delete "Concerns" and replace with "Conservation"

Section 7.2, p. 7-2, definition of Cleaning Solution:
Revise to "liquids used to remove ink and debris from the operating surfaces---"

Section 7.2, p. 7-2, definition of Dampening System:
Delete the word "press" and replace with "lithographic plate."

Section 7.2, p. 7-3, definition of Heat-set:
Delete the word "set" and replace with "evaporate ink oil from"

Section 7.2, p. 7-4, definition of term lithography:
Delete the word "impressed" and replace with "recessed."

Section 7.2, p. 7-3, definition of term press:
Delete words "finished product" and replace with "printed sheet or web".

Section 7.2, p. 7-2, definition of term fountain solution:
Delete the phrase "it spreads better across the printing surfaces" and replace with "it spreads across ink and the plate surfaces".

Section 7.3, p. 7-3, par. 1, sentence 1:
The statement that most printing facilities consist of at least two types of offset lithographic printing is erroneous. A more accurate description of facilities would be that most of them are dedicated to one process only and that some may contain more than one type of offset printing process.

Section 7.3, p. 7-3, par. 2, sentence 1:
The possible definition of affected facilities of "one or more sub-facilities involved in similar offset lithographic printing processes" is confusing and contradictory and needs to be revised.

Section 7.3, p. 7-4, par. 2, sentence 3:
Delete the word "chapter" and replace with "document".

Section 7.3, p. 7-4, par. 2, sentence 1:
The other suggested definition of affected facility of "an individual printing press with its own individual dryer exhaust controls (if heatset) or the combination of two or more presses and the common dryer exhaust, or fountain solution and cleaning solution delivery systems that they share" is not accurate and confusing.

Section 7.3, p. 7-4, par. 3, sentence 2:
Since only offset lithography is subject to this document, this entire concept is out of context.

Section 7.4, p. 7-4, par. 1, sentence 4:
Delete the word "equipment" and replace with "material".

Section 7.4, p. 7-5, par. 2, sentences 2-5:
In the discussion of control device efficiency, there is no consideration of the variable flow rates and concentrations of organics entering the control device, which will affect reduction efficiencies. The test method used to measure the control device efficiency will also affect the calculated destruction efficiency values. Delete "20ppmv" and replace with "50 ppmv."

References to the statements should be provided.

Section 7.4, p. 7-5, par. 2, sentence 5:
A reference to the statement should be provided.

Section 7.4, p. 7-5, par. 4, sentence 1:
Delete the word "equipment" and replace with "material".

Section 7.4, p. 7-6, par. 1, sentence 1:
Delete the word "densities" and replace with "specific gravities".

Section 7.5, p. 7-6, par. 1, sentence 1:
The level of business usually does not require a plant to "be running at full operating conditions and flow rates." To insist on this qualification will increase testing costs many fold and generate large amounts of solid waste. Prefer "running at representative conditions and flow rates."

Appendix A, Section A-2, p. A-4:
Fourth reference should be "Carman," not "Carmen."

Corporate should be "TEC" not "Tec."

Appendix B, Section B-1.0, p. B-1:
The high ink use for web is believed due to the assumption that web press units have a single printing assembly as opposed to the two assemblies characteristic of perfecting heatset presses (blanket-to-blanket). The result biases the entire heatset model analyses.

Appendix B, Section B-6.0, part 1, last sentence:

Assumption of "through stagnant, non-diffusing air"---invalidates application to new solution surfaces moving on rotating rollers.

Application to water evaporation rates calculated by the same approaches might promote acceptability.

Appendix C., p. C-2, Table C-1, last column:

The 2:1 ratio of press dryers to presses is not typical of the heatset web offset industry though it is encountered infrequently.

Appendix C, p. C-3, Table C-2, column 3:

Why is total exhaust from plant AII five times greater than that from AI when the ratios of press units are 16/6, ink use 340/154 and dryers 4/2?

Appendix C, Section C-2.0, p. C-4, par. 1:

Heat Value is typically in the range 6 to 13Btu/scf not "1.2 Btu/scf."

Appendix C, Section C-2.1F, p. C-5:

Temperature should be "1400° F." not "1600 ^{o}F."

Appendix C, Section C-2.2B., p. C-9:

No provision for valuing in duct work involving multiple presses on single emission control unit.

Appendix C, Section C-3.0, p. C-15:

Heat value should be 6 Btu/scf, not 1.2 Btu/scf.

Appendix C, Section 3.1K, p. C-15:

Temperature should be "650°F." not "900°F."

Appendix C., Section C-3.2.B.1, p. C-21:

Why should equipment cost for 0 percent heat recovery exceed that for 35 percent?

Appendix C, Section C-3.3C, p. C-25:

Should be "precious metal catalyst" not "metal oxide catalyst." Base metal catalysts are very rapidly poisoned by sulfur.

Replacement materials for 95% destruction efficiency should be "4 years" not "2 years." Vendors currently warranty catalysts for 2-1/2 years even in the presence of normal amounts of phosphorous and silica poisoning.

Appendix C, Section C-4.2D, p. 3-36:

Real plants, particularly A-IV counterparts, operate 3 shifts per day and will not have time today as cool the carbon beds. The model is inadequate.

Appendix C., Section C-5.4, p. C-42, 43:

Delete entire section.

Section 7.5, p. 7-6, par. 2, sentence 1:
It is our understanding that this section will be amended to indicate that Method 25A will be recommended when outlet values are below 50 ppmv as C_1. Method 25A should be the recommended method for add-on control devices and for screening outlets of incinerators. The relatively small negative bias experienced with Method 25A tests of heatset afterburner outlet exhausts should outweigh the relatively large inconsistencies, difficulties, and expense of Method 25.

Section 7.5, p. 7-6, par. 3, sentence 3:
A reference should be provided.

Section 7.6.1, p. 7-7, par. 1, sentence 2:
Please provide details and reference to modification of EPA Method 24. In recommending and specifying a test method for the determination of fountain solution VOC content, EPA needs to consider the limited technical and financial resources of the average printer.

Section 7.6.1, p. 7-7, par. 2, sentence 2:
The concept embodied by this statement is misplaced. Title III of the Clean Air Act Amendments of 1990 does not ban the use of any listed hazardous air pollutant. Eventually, Title III will require certain source categories to control the emissions of hazardous air pollutants through MACT.

Section 7.6.3, p. 7-8, par. 1, sentence 1:
See comments outlined at 7.6.1, p, 7-7, par. 2, sentence 2.

Section 7.7.1, p. 7-8, par. 2, sentence 3:
Please provide a reference for this statement.

Section 7.7.1, p.7-8, par. 2, sentence 4:
Please provide a basis for drawing the conclusion that temperature monitors with strip charts are "relatively inexpensive." Were all of the capital, installation, operation, maintenance, and personnel costs incorporated into the economic models used to determine cost/ton reduction ratio?

It is questioned if monitoring temperature rise across a catalytic bed provides meaningful data, especially since inlet flows and organic concentration will vary creating variations in temperature rises across the bed.

Section 7.7.1, p. 7-8, par. 3, sentence 3:
Efficient operation of the heatset dryer demands that the pressure within the unit be lower than the pressure in the pressroom.

Please define test methods used to qualitatively measure air flow direction. Please specify frequency of monitoring. Were the capital, operation and maintenance costs including personnel

associated with this testing and monitoring considered in the economic models for determining cost/ton reduction ratio?

Section 7.7.2, p. 7-9, par. 2, sentence 1 :

Conductivity at best can only provide an indication of fountain solution concentration. Because of daily and even hourly fluctuations in conductivity of incoming tap water, which is the most common source of printers water (i.e. untreated), introduction of contaminants into the fountain solution, and at times the need to add additional fountain concentrate during the course of a print run, using conductivity as a measure of concentration is limited.

The use of hydrometers and record-keeping are omitted. These are valuable sources of continuing information with minimal associated costs.

Section 7.7.3, p. 7-9, par. 3:

See comments outlined above for Section 7.7.2, p. 7-9,

Section 7.7.4, p. 7-9, par. 1, sentence 1:

The industry questions the relative merits of requiring continuous temperature monitoring at the fountain tray. With the multitude of variables the printer must monitor and control, the fountain solution temperature measurements should be limited in number. A once per shift thermometer measurement of the recirculator should be sufficient.

Were the capital, operation, and maintenance costs of the measuring and monitoring equipment including considerations of personnel included in the economic models used to determine the cost/ton reduction ratio?

Section 7.7.5, p. 7-10, par. 1, sentence 3;

Please describe the term "continuous cleaning operations" as applied to the offset lithographic industry.

Only the largest printers will possess a refractometer and be able to use it efficiency. Conductivity meters for the proposed use is questionable and would have to be standardized by the supplier, not the printer. The manufacturers' cleaner specifications of VOC content should be taken at face value for record keeping purposes.

Recordkeeping frequency of cleaning solution use should be very limited in small plant operations, i.e. once a week. Only large plants need recordkeeping to be made on a more frequent basis.

Differentiating between blanket and press cleaners and their VOC contents is expected to require separate records.

COMMENTS
APPENDIX C COST CALCULATIONS
DRAFT CTG
WEB OFFSET LITHOGRAPHY

GENERAL COMMENTS:

1. The two shift operating scenario for the model plants does not represent this industry's method of operation and especially it should not be assumed so that the third shift would be available to such operations as carbon regeneration and maintenance. These functions must be accounted for during the operating day. The proper scenario would be three shifts and séven day operation.

2. For all of the model plants, the hours of operation of the control device should exceed the individual press operating hours as not all of the presses will run simultaneously, i.e., a distribution of zero to eight dryers running. In addition, some control devices will have startup times required and standby times required due to the length of time required to reach operating conditions.

3. The carbon bed considered for polishing treatment of the cooler-filter system cannot be regenerated by hot air or by low pressure steam. Hot air cannot be used as air pollution would only be regenerated. Additionally, air temperatures of 550°F or higher would cause ignition of the carbon bed. Low pressure steam, typically 125 psig, could raise the carbon bed temperature to only 350°F and would not desorb VOC's deposited from a 390°F dryer exhaust. LA Litho, who operated a carbon adsorption system, found that 600°F and vacuum conditions in an inert environment were required to desorb. A functional regeneration system will add considerable capital cost and the regeneration step will require over a shift of time to conduct.

   Systems such as described above should not be included in the RACT documentation since they do not exist nor has it been demonstrated they will function over an extended period of time.

4. No provisions have been made in the capital costs of any of the add-on controls for the safety purging of the gas-fired dryer burners prior to introduction into the control system. This would consist as a minimum of a damper system to vent the purging air to atmosphere and an actuator to redirect the damper(s) at the end of the purging cycle. Such a damper system will cost $15,000 per damper system (at least one required per press) to insure inherent fail safety.

5. No provisions have been made in the operating costs of the cooler-filter systems for cleaning of the heat exchanger(s) and the cleaning, replacement and disposal of the filter media involved.

6. No provisions were made to correct the value of the recovered solvent for the additional costs involved to modify the dryer burner systems, to store the recovered solvent and to operate and maintain these additional systems.

SPECIFIC COMMENTS:

Page C-1. The 0.033 factor should be identified as related to the amount of ink solvent applied per unit area instead of being dimensionless. The amount of ink applied varies with each customer's requirements and is simplified in this equation only by assuming an artificial average value for the model.

Page C-2. The annual ink usage rate appears reasonable for 3000 operating hours. However, the web speed is inconsistent. That usage would indicate "type only" printing, i.e., paperback books. It is probable that reduced speeds should be indicated.

Page C-3. The Model plant A-I should all have 4,000 scfm Total exhaust (Typographical error).

Page 6-4 indicates the dryer exhaust should contain 600-800 ppmv of VOC versus the 179-405 ppm listed in the table. Which is correct? Using the values assumed, the VOC for A-III appears to be 135 ppm.

Page C-4. The molecular weight of the heatset ink solvent is too low. Magiesol 47, a typical solvent, has a molecular weight of 195-205. Any solvent with a lower molecular weight will have a higher vapor pressure and will not condense to the same degree, rendering the cooler-filter systems less effective.

The oxygen content of the dryer exhaust is usually reduced to 18-19% by partial oxidation of the VOC material, combustion requirements of the dryer burner or due to the production of water vapor and carbon dioxide. The typical analysis is 19% oxygen, 2% water vapor, 0.5% carbon dioxide and 78.5% nitrogen.

In para C-2.1 B. 2., back calculations show that a definition of standard conditions of 77°F and 29.92 in. of Hg was used. The definition of standard conditions in the fan industry is 70°F and 29.92 in. of Hg. Accordingly, the amount of scf in a lb-mole is 386.73 scf/lb-mole.

Page C-5. In para C-2.1 E., the turndown ratio of 20,000 to 50 is not realistic (400:1). Flow turndown ratios due to varying fan speed are usually 4:1 with an upper limit of 6:1. This can be multiplied with dampers by another 4:1 factor.

In para C-2.1 F., the 1600°F incineration temperature is excessive for heatset ink solvents. 1200-1250°F will destroy the solvents while about 1400°F is required to destroy the carbon monoxide produced.

Page C-6. In para H., for clarity the division sign used to indicate the denominator should be changed to a /.

Page C-8. In para J. 1., additional air may be required during high fire by the dryer burner(s), i.e., startup and speed or temperature changes, if the exhaust air oxygen content drops below 16%. Note: the air discharged from the thermal afterburner will contain 12.1% oxygen, 8.2% water vapor, 3.7% carbon dioxide and 76.0% nitrogen.

In para C-2.2 A., the equipment cost algorithms do not consider the complex arrangement requiring the safety purging of the dryers. The capital cost figures appear to be about 25% too low.

Page C-9. In para C-2.2 C., the auxiliary collection fan cost does not reflect the increased pressure drop requirements caused by the heat recovery equipment. The pressure drop is a function of the capital cost of the heat recovery equipment, thus the algorithm must be examined. Higher percentage heat recovery is associated with higher pressure drops and fan costs.

Page C-11. In para C-2.3 A. 1., the amount of operating labor required is too high. A more appropriate level is 0.1 hour per shift. The only work to be performed is a review of operating temperatures and an overview of the condition of the equipment.

In para C-2.3 B., the amount of maintenance labor required is too high. A more appropriate level is 0.1 hour per shift. There is only one moving part, the auxiliary collection fan, and the burner to maintain. The materials should be projected as five times the maintenance labor as a number of spares should be on hand.

Page C-15. Similar comments as on page C-4. The molecular weight of the heatset ink solvent is too low. Magiesol 47, a typical solvent, has a molecular weight of 195-205. Any solvent with a lower molecular weight will have a higher vapor pressure and will not condense to the same degree, rendering the cooler-filter systems less effective.

The oxygen content of the dryer exhaust is usually reduced to 18-19% by partial oxidation of the VOC material, combustion requirements of the dryer burner or due to the production of water vapor and carbon dioxide. The typical analysis is 19% oxygen, 2% water vapor, 0.5% carbon dioxide and 78.5% nitrogen.

Page C-22. Similar comments as on page C-9. In para C-3.2 D., the auxiliary collection fan cost does not reflect the increased pressure drop requirements caused by the heat recovery equipment. The pressure drop is a function of the capital cost of the heat recovery equipment, thus the algorithm must be examined. Higher percentage heat recovery is associated with higher pressure drops and fan costs.

Page C-24. In para C-3.3. A. 1., the amount of operating labor required is too high. A more appropriate level is 0.1 hour per shift. The only work to be performed is a review of operating temperatures and surveillance to identify any visual malfunctions.

Page C-32. In para C-4.1 B., the cost of the carbon adsorption unit is too low. This is the only unit that is sized based on the VOC content. All other units are sized considering the air flow through the systems. Accordingly, the sizing must reflect the maximum VOC input, not the average. If cooling is inadequate or filter effectiveness is low, the carbon may see up to the full concentration of VOC. For these reasons alone, at least two vessels of the size projected should be used. Also, since low pressure steam will not desorb the VOC from the carbon and hot air cannot be used, the system must be more complex. The only system that has been demonstrated to operate over an extended period is the LA Litho method of desorption. This system consisted of electric heaters within the carbon bed, an inert gas system to prevent ignition of the carbon and a vacuum pump and condenser system. The increased sophistication of the desorption system will increase the capital cost about 50% per vessel. The new EC_{ad} will be:

$$EC_{ad} = 2 * 1.50 * 68,000$$

$$= \$204,000$$

Page C-34. In para C-4.2 A., the amount of operating labor required is too low. In addition to reviewing operating temperatures and pressures, cleaning operations must be done as well as replace and dispose of used filter media. Since these actions must be done with the system offline, a more appropriate level is 1.0 hour per shift. For those systems with carbon adsorbers, a level of 10.0 hours per regeneration is required. On the average, one regeneration of the carbon is required each day. Thus the operating labor for regeneration would be 5.0 hours per shift.

Page C-35. In para C-4.2 B. 1., the amount of maintenance labor required is too low. The system consists of two auxiliary collection fans, two to four cooling air fans and at least two filter media belts. A more appropriate level is 1.5 hours per shift.

In para C-4.2 B. 2., the amount of materials should be increased appropriately.

No mention is made of the requirement for cleaning the heat exchangers. For model plant A-III, each cooler-filter will require six cleanings per year. Assume cleaning requires sixteen manhours of labor, $1500 of cleaning materials and $2000 to dispose of the contaminated cleaning solution. Heat exchanger cleaning would cost:

Labor = 2 * 6 * 16 * 17.21 = $3,304

Materials = 2 * 6 * 1500 = $18,000

Disposal = 2 * 6 * 2000 = $24,000

Total Annual Heat Exchanger cleaning = $45,304

No mention is made of the requirement for either replacing the filter media in the traveling bed filter or the cleaning and replacement of the candle filters. Using a 2 year filter life for the candle filters and a candle filter cost of $1000 per candle, the replacement cost would be:

Filters = (20,000/500) * 1000 = $40,000

Replacement Labor = 32 manhours * 17.21 = $551

Annual Filter Replacement Costs

(Materials & Labor) = (40,000 + 551) * CRF

= $40,551 * 0.500

= $20,276/yr

In para C-4.2 B. 3., the assumed carbon life of five years appears too long. LA Litho found that about 5% of the carbon bed became unusable each regeneration due to contamination by high molecular weight material that would not desorb under the temperature and vacuum conditions available. Using $25,647 cost per replacement and a yearly average of one regeneration per day, an appropriate annual carbon replacement cost is:

Annual Carbon Replacement Costs

(Materials & Labor) = 25,647 * 5 * 52 * 0.05

= $333,411

Page C-36. In para C-4.2 D., the assumption that additional electricity costs are negligible is incorrect. Carbon bed pressure drops are expected to be 1.67 in. w.c. per foot of thickness. Using a bulk carbon density of 27 lb/cf and the 11,605 lb of carbon, 430 cf of carbon will be used. It is likely that a 3 foot carbon bed will be used to keep the tank cross-sectional area to about 143 sq.ft. or 13.5 ft. in diameter. This will produce about a 5 in. w.c. pressure drop at the beginning of the carbon bed life, increasing to up to 12 in. w.c. as the proportion of fines increase. Additionally, the "extra" capacity of the system fans is used to extend the times between cleaning or replacement of the filter media. Use of this capacity to produce carbon bed flow will greatly increase the cleaning or replacement frequency.

In para C-4.2 E., the carbon bed cannot be regenerated by low pressure steam. Obviously, the daily replacement of carbon at $25,647 per replacement is unacceptable. LA Litho has used electrical heating under inert atmosphere, followed by vacuum pumping and condensation of vapors. A vacuum of 1 Torr was required. Electricity will be required for the heater elements and the vacuum pump. The electricity required for each regeneration is:

Electricity for heating $= \frac{11,605 * 0.24 * (600-100) * 1.1}{3413}$

= 449 KWH

Electricity for pumping = 5 hours at 25 KW

= 125 KWH

Total Electrical use = 449 + 125 = 574 KWH

Assuming inert gas costs of $100 per regeneration and cooling water costs to condense the VOC of $200 per regeneration, the desorption costs are:

Regeneration Costs = 5 * 52 *((0.061)(574)+ 300)

= $87,104

In addition, there was no provision for capital costs of a condensing and separating system for the steaming. The water condensate will be contaminated with the water-soluble VOC from the fountain solution and must be treated before reusing as boiler feedwater or discharged.

Page C-38. In para C-4.2 M., the recovery credits are the net of value of the solvent recovered minus the costs of handling the solvent. Two dispositions are likely for the recovered solvent - sale or burning as alternate dryer fuel. The price available for recovered solvent is about $0.25/gal. The value as an alternate fuel in dryers appears to be about $0.63/gal but some additional expenditures are required which reduce the value of both dispositions.

A storage tank farm will be required to accumulate the recovered solvent. The recovery rate is approximately 10 gal/day which will not satisfy the burner fuel requirements. Burner fuel storage capacity should be at least 1000 gal and storage for eventual sale would probably be about 7000 gal for economy in shipment. The tank farm will require minimal operating labor, consisting mainly of monitoring tank levels and pumps during transfers.

Use of recovered solvent as an alternate burner fuel will require the modification of existing dryers to dual-fuel systems. This involves the addition of a liquid fuel feeding system, a new dual fuel burner and modifications to the dryer combustion chamber to handle the longer flame length of the liquid fuel.

Modification costs are over $20,000 per dryer burner. The sequence of operation of a dual fuel burner is to start up on gaseous fuel, switch over to liquid fuel and, on controlled shutdowns, switch back to gaseous fuel.

The use of a liquid fuel involves much more maintenance labor and materials on the dual fuel burner. The systems operated to date have experienced some of the following problems: sooting due to poor atomization of the liquid fuel because of dirty nozzles to the extent the white paper web became gray, failure of the fuel pump due to fine solids content in recovered solvent that eroded the metal surfaces, and corrosion due to the high acidity of the recovered solvent from the presence of partially oxidized material. Since failures in the dryer burner results in lost productive time, the lack of reliability has resulted in an almost total absence of liquid fueled dryers in the industry.

Environmental Conservation Board
of the Graphic Communications Industries

n Intra-Industry Organization for Environmental Affairs

1899 Preston White Drive
Reston, VA 22091-4326
703/648-3218 • FAX 703/648-3219

Environmental Conservation Board

of the

Graphic Communications Industries

Amendments to

APPENDIX D

Offset Lithographic Printing

CTG Model Rule

The following text of Appendix D, the CTG Model Rule for Offset Lithographic Printing has been amended to reflect the suggested changes of the Environmental Conservation Board of the Graphic Communications Industries (ECB). ~~Interliniated language~~ in the text is language that is presently included in the Model Rule that ECB recommends be omitted. Language in **ALL CAPITALS LETTERS AND BOLD FACE** is language that ECB recommends be added to the original text. A second copy of Appendix D follows which deletes the interliniated language, with only the Model Rule as recommended by ECB remaining.

printed on recycled paper with vegetable oil ink

APPENDIX D

OFFSET LITHOGRAPHIC PRINTING
CTG MODEL RULE

D.1 INTRODUCTION

This appendix presents a model rule to limit volatile organic compound (VOC) emissions from offset lithographic printing operations. This rule is for informational purposes only and, as such, is not binding on the air quality management authority. However, EPA expects that State and local air quality rules developed pursuant to this CTG will address all the elements covered in the model rule.

The remainder of this appendix contains the model rule. Separate sections cover the following rule elements: applicability, definitions, emissions standards, equipment standards, emissions standards testing, equipment standards testing, monitoring requirements, and reporting/recordkeeping.

D.2 APPLICABILITY

The provisions set forth in this model rule apply to the offset lithographic printing industry only. There are four types of offset lithographic printing: heatset

web, non-heatset web (non-newspaper), non-heatset sheet-fed, and newspaper (non-heatset web). An affected facility may be defined as follows: one or more printing operations involved in at least one type of offset lithographic printing process.

Other types of printing operations, such as flexography, rotogravure, or letterpress, may be present in an offset lithographic printing facility; however these operations are not subject to the requirements set forth in this model rule.

Any dryer exhaust stream for which an existing control device is employed to control VOC emissions should not be required to meet ~~the 95 percent reduction or 20 ppmv emissions limit specified in the model~~ **"THE PERCENT REDUCTION OR EMISSIONS LIMITS SPECIFIED IN SECTION D.4(A) OF THE MODEL"** rule until the control device is replaced for other reasons. In other words, no facility should be required to upgrade or replace a control device that is in place before the date of this regulation, provided that the device ~~is at least 85 percent efficient in the~~ **"MEETS THE APPLICABLE STATE RACT REQUIREMENTS FOR THE"** destruction **"OR RECOVERY"** of VOC's and is operated and maintained in accordance with the procedures described in Sections D.6, D.8, and D.9.

D.3 DEFINITIONS

Alcohol substitutes. Non-**"ISOPROPYL"** alcohol additives that contain VOC's and are used in the fountain solution. Some additives are used to reduce the surface tension of water; others (especially in the newspaper industry) are added to prevent piling (ink build-up).

Cleaning solution. ~~A liquid~~ **"LIQUID SOLVENTS"** used to remove ink and debris from the surfaces of the printing press and its parts.

Dampening System. Equipment used to deliver the fountain solution to the ~~press~~ **"LITHOGRAPHIC PLATE".**

Fountain Solution. A mixture of **"PRIMARILY"** water, ~~non-volatile printing chemicals, and an (liquid) additive that~~ **"OTHER CHEMICALS, AND ADDITIVES THAT REDUCE THE SURFACE TENSION"** reduces the surface tension of the water so that it spreads easily across the printing surfaces. The fountain solution wets the non-image areas so that the ink is maintained within the image areas. Isopropyl alcohol, ~~a VOC, is the most common additive~~ **"OR ALCOHOL SUBSTITUTES ARE COMMONLY** used to reduce the surface tension of the fountain solution.

Heat-set. ~~Any operation~~ **"A WEB PRINTING OPERATION"** where heat is required ~~to set~~ **"TO EVAPORATE"** the printing ink **"OILS"**. ~~Hot-air~~ **"HEATSET"** dryers are used to deliver the heat.

HEATSET DRYER **"A DEVICE TO HEAT THE PRINTED SUBSTRATE AND TO PROMOTE EVAPORATION OF INK OILS".**

Lithography. A ~~planar~~ **"PRINTING"** process where the image and non-image areas are chemically differentiated; the image area is oil receptive and the non-image area is water receptive. This method differs from other printing methods, where the ~~image is a raised or impressed~~ **"IMAGES ARE PRINTED FORM RAISED OR RECESSED"** surface.

Non-Heatset. ~~Any operation~~ **"A LITHOGRAPHIC OPERATION"** where the printing inks are set without the use heat. For the purposes of this rule, ultraviolet-cured **"AND ELECTRON BEAM-CURED"** inks are considered non-heatset.

Offset. A printing process that transfers the ~~printing image~~ **"INK FILM FROM THE LITHOGRAPHIC PLATE"** to an intermediary surface **"(BLANKET)"**, which, in turn transfers the ~~image~~ **"INK FILM"** to the printing substrate.

Press. A printing production assembly ~~that can be made up of one or many~~ **"COMPOSED OF ONE OR MORE"** units to produce a ~~finished product~~ **"PRINTED SUBSTRATE"**.

RECIRCULATION RESERVOIR. **THE COLLECTION TANK WHICH ACCEPTS FOUNTAIN SOLUTION RECIRCULATED FROM PRINTING UNIT(S). THE TANK COMMONLY CONTAINS A COARSE FILTER TO REMOVE CONTAMINANTS FORM THE FOUNTAIN SOLUTION AS WELL AS THE COOLING COILS FOR REFRIGERATION.**

Sheet-fed. ~~Any~~ **"A PRINTING"** operation where ~~paper~~ **"INDIVIDUAL SHEETS OF SUBSTRATE ARE"** ~~is~~ fed to the press ~~in individual sheets~~ **"SEQUENTIALLY"**.

Unit. The smallest complete **"PRINTING"** component of a printing press. ~~Each unit can print only one color.~~

Web. A continuous roll of paper used as the printing substrate.

D.4 EMISSION STANDARDS

(a) Any person who owns or operates a heatset offset lithographic printing press shall reduce VOC emissions from the press dryer exhaust ~~vent~~ by ~~95~~ **"90"** weight-

percent of total organics (~~minus~~ **"LESS"** methane and ethane) or maintain ~~a maximum dryer exhaust~~ **"A CONTROL DEVICE"** outlet concentration of ~~20 ppmv~~, **"LESS THAN 50 PPMV AS C_1 "** whichever is less stringent.

D.5 ~~EQUIPMENT STANDARDS~~ **"PROCESS STANDARDS"**

(a) Any person who owns or operates a web-fed offset lithographic printing press that uses **"ISOPROPYL"** alcohol in the fountain solution shall ~~reduce~~ **"MAINTAIN"** total fountain solution VOC's ~~to 1.6 percent~~ **"AT 8 PERCENT"** or less (by volume). Alternatively, a standard of ~~3~~ **"12"** percent or less (by volume) VOC may be used if the fountain solution containing alcohol is refrigerated to less than 60°F.

(b) Any person who owns or operates a sheet-fed offset lithographic printing ~~facility with a combined total of no more than 24 printing units (single blanket) that use alcohol in the fountain solution shall reduce VOC's to 6 percent or less (by volume) VOC~~. **"PRESS THAT USES ISOPROPYL ALCOHOL IN THE FOUNTAIN SOLUTION SHALL MAINTAIN TOTAL FOUNTAIN SOLUTION VOCS AT 10 PERCENT OR LESS (BY WEIGHT).** Alternatively, a standard of ~~10~~ **"15"** percent or less (by volume) VOC may be used if the fountain solution containing alcohol is refrigerated to below 60 °F.

~~(c) Any person who owns or operates a sheet-fed offset lithographic printing facility with a combined total of 24 printing units (single blanket) or more that use alcohol in the fountain solution shall reduce VOC's to 3 percent or less (by volume). Alternatively, a standard of 5 percent or less containing alcohol is refrigerated to below 60° F.~~

~~(d)~~**"(c)"** Any person who owns or operates any type of offset lithographic printing press shall be considered in compliance with this regulation if the only VOC's in the fountain solution are in non-**"ISOPROPYL"** alcohol additives or alcohol substitutes, so that the concentration of VOC's in the fountain solution is ~~2.5~~ **"5"** percent or less (by weight). (The fountain solution should not contain any alcohol.)

~~(e)~~**"(d)"** Any person who owns or operates an offset lithographic printing press shall reduce VOC emissions from cleaning solutions by using cleaning solutions with a 30 percent or less ~~(as used)~~ VOC content. **"OR A VOC CONTENT OF 900 GRAMS OR LESS OF VOC PER LITER OF MATERIAL AND A VOC COMPOSITE PARTIAL PRESSURE OF 25 MM HG OR LESS AT 20°C (68 °F)".**

D.6 EMISSIONS STANDARDS TESTING

(a) For the purpose of demonstrating compliance with the emission control requirements of this rule, the affected ~~facility~~ **"SOURCE"** shall be run at ~~full~~ **"THE MAXIMUM PRACTICAL"** operating conditions and flow rates **"COMPATIBLE WITH SCHEDULED PRODUCTION DURING COMPLIANCE TESTING"** ~~during any~~ emission

(b) ~~Emission tests shall include an initial test when the control device is installed that demonstrates compliance with either the 95 weight-percent reduction or the 20 ppmv emission limit.~~ **"EMISSION TESTS FOR SOURCES INSTALLED AFTER THE EFFECTIVE DATE OF THIS REGULATION SHALL INCLUDE AN INITIAL TEST WHEN THE CONTROL DEVICE IS INSTALLED THAT DEMONSTRATES COMPLIANCE WITH EITHER THE 90 WEIGHT-PERCENT REDUCTION OR THE 50 PPMV AS C_1 EMISSIONS LIMITS SPECIFIED IN D.4(A)".**

(c) The following EPA methods (in 40 CFR 60, Appendix A) shall be used to demonstrate compliance with the emission limit or percent reduction efficiency requirements listed in D.4 (a) above. **"ALTERNATE METHODS MAY BE USED WITH THE APPROVAL OF THE ADMINISTRATOR".**

(1) EPA Method 1 or 1A, as appropriate, ~~shall~~ **"MAY"** be used for selection of the sampling sites. The control device inlet sampling site for determining

efficiency in reducing total organics (less methane and ethane) from the dryer exhaust shall be placed before the control device inlet and after the dryer.

(2) EPA Method 2, 2A, 2C, or 2D, as appropriate, ~~shall~~ **"MAY"** be used to determine the volumetric flow rate of the exhaust stream.

(3) ~~EPA Method 25 or 25A shall be used for determining emissions from heatset dryer exhaust~~. **"EPA METHOD 18, 25, OR 25A, AS APPROPRIATE, MAY BE USED TO DETERMINE EMISSIONS FROM HEATSET DRYER AND CONTROL DEVICE EXHAUSTS".** Good judgement is required in determining the best applicable VOC test method for each situation.

(i) Since EPA Method 25 has a minimum detectable concentration of 50 ppm carbon, and given the low concentration of VOC's sometimes present in dryer exhaust from offset lithographic presses and the high removal efficiency achievable with add-on controls, EPA Method 25A may be more suitable than EPA Method 25 for determining compliance.~~with a 95 weight-percent reduction standard in some situations~~ **"~~TO A TEMPERATURE ABOVE THAT OF THE GAS STREAM, E.G., 350°F"~~.** Note that EPA Method 25 specifies a <u>minimum</u> probe and filter temperature of 265°F. To prevent condensation, the probe and filter should be heated to ~~the gas stream temperature, typically closer to 350°F~~ **"A TEMPERATURE ABO~~UT~~VE THAT OF THE GAS STREAM, E.G., 350°F".**

(ii) EPA Method 25A utilizes a flame ionization detector (FID), which had the ability to measure low concentrations. This technique usually is not recommended for ~~incinerators because incomplete combustion may result in the formation of aldehydes, ketones, and partially oxidized organic species that interfere with the accuracy of FID measurement.~~ **"INCINERATOR OUTLETS WITH VOC CONCENTRATIONS IN EXCESS OF 50 PPM AS C_1. HOWEVER, EPA METHOD 25A IS PREFERRED FOR INCINERATORS WHERE EXPECTED OUTLET CONCENTRATIONS WILL BE BELOW 50 PPM AS C_1 OR WHERE DRYERS FROM MULTIPLE PRESS LINES DISCHARGE INTO A CENTRAL CONTROL DEVICE".**

D.7 EQUIPMENT STANDARDS TESTING

(a) Fountain Solution Testing

(1) A **"COMPOSITE"** sample of the fountain solution (as used) shall be taken from the from ~~the fountain tray or reservoir of fountain solution (after mixing) of each until to determine~~ **"EACH SUBJECT PRESS TO DETERMINE"** fountain solution VOC content in accordance with section D.5 (a) through (d) above.

(2) ~~A modification of EPA Method 24 (under development) shall be used to determine the VOC content of the fountain solution sample(s).~~ **"RECORDS OF**

FOUNTAIN SOLUTION COMPOSITION (AS MIXED) MAY BE USED TO DETERMINE THE VOC CONTENT OF THE FOUNTAIN SOLUTION".

(b) Refrigeration Equipment Testing

(1) A thermometer or other temperature detection device capable of reading to 0.5°F shall be used to ensure that a refrigerated fountain solution containing alcohol is below 60°F ~~at all times.~~

(c) Cleaning Solution Testing

(1) ~~A sample~~ **"SAMPLES"** of the cleaning ~~solution~~ **"SOLUTIONS"** (as used) shall be taken to demonstrate compliance with the cleaning solution VOC content **"OR VAPOR PRESSURE** imitations listed in D.5 ~~(e)~~ **"(d)"** above.

(2) ~~A modification of EPA Method 24 (under development) shall be used to determine the VOC contnct of the cleaning solution (as used).~~ **"RECORDS OF CLEANING SOLUTION COMPOSITION (AS MIXED) TOGETHER WITH MATERIAL SAFETY DATA SHEET INFORMATION MAY BE USED TO DETERMINE THE VOC CONTENT OF THE CLEANING SOLUTION. ALTERNATIVFLY, VOC CONTENT OR VAPOR PRESSURE AS PROVIDED BY THE MANUFACTURER MAY BE USED TO**

DEMONSTRATE COMPLIANCE WITH THE REQUIREMENTS OF D.5 (D)".

D.8 MONITORING REQUIREMENTS

(a) Add-on Dryer Exhaust Control Devices

(1) The owner or operator of a heatset offset lithographic printing press **"EQUIPPED WITH AN AFTERBURNER"** shall install, calibrate, maintain, and operate a ~~temperature monitoring device~~, according to the manufacturer's instructions, **"CONTINUOUS TEMPERATURE MONITORING EQUIPMENT TO MONITOR THE COMBUSTION CHAMBER TEMPERATURE OF THERMAL AFTERBURNERS OR THE TEMPERATURE RISE ACROSS A CATALYTIC AFTERBURNER BED. THE COMBUSTION CHAMBER OR CATALYST INLET TEMPERATURE SHOULD BE SET DURING TESTING REQUIRED TO DEMONSTRATE COMPLIANCE WITH THE EMISSION STANDARDS OF D.4 (A)".** ~~at the outlet of the control device. The monitoring temperature should be set during testing required to demonstrate compliance with the emission standard (Section 7.6.3).~~

(2) The temperature monitoring device shall be equipped with a continuous recorder and shall have an accuracy of ~~0.5°F~~ **"5°F"**.

(3) The dryer pressure shall be maintained lower than the press room air pressure such that air flows into the dryer at all times. ~~A 100 percent emissions capture efficiency for the dryer shall be demonstrated using an air flow direction measuring device~~. **"THE CAPTURE EFFICIENCY FOR THE DRYER SHALL BE DEMONSTRATED USING AN AIR FLOW DIRECTION INDICATING DEVICE".**

(b) Fountain Solution VOC Concentration

(1) ~~The purpose of monitoring the VOC concentration in the fountain is to provide data that can be correlated to the mount of material used when the fountain solution is in compliance with the limits in D.5(a) through (d) above. The following methods may be used to measure the concentration of VOC's in the fountain solution of a frequent basis.~~ **"RECORDS OF FOUNTAIN SOLUTION COMPOSITION (AS MIXED) MAY BE USED TO DETERMINE THE VOC CONTENT OF THE FOUNTAIN SOLUTION; OR".**

(2) The owner or operator of any offset lithographic printing press ~~shall~~ **"MAY"** monitor fountain solution VOC concentration **"AT LEAST ONCE PER BATCH"** with a refractometer that is corrected for temperature. ~~at least once per 8-hour shift.~~ The refractometer shall have ~~an optical~~ **"A VISUAL, ANALOG"** or digital readout

with an accuracy of 0.5 percent VOC. A standard solution shall be used to calibrate the refractometer for the type of VOC used in the fountain. **"SOLUTION; OR"**

(3) ~~Alternatively~~, The owner or operator of any offset lithographic printing press may monitor fountain solution VOC concentration with a hydrometer equipped with a temperature correction ~~at least once per 8-hour shift~~ **"AT LEAST ONCE PER BATCH WITH A HYDROMETER THAT IS CORRECTED FOR TEMPERATURE"**. The hydrometer shall have ~~an optical~~ **"A VISUAL, ANALOG"** or digital readout with an accuracy of 0.5 percent VOC.

(4) ~~The VOC content of the fountain solution may be monitored with a conductivity meter if it is determined that a refractometer or hydrometer cannot be used for the type of VOC's in the fountain solution. The conductivity meter reading for the fountain solution shall be referenced to the conductivity of the incoming water.~~

(c) Fountain Solution Temperature

(1) The owner or operator of any offset lithographic printing press using refrigeration equipment ~~on~~ **"FOR"** the fountain **"SOLUTION"** ~~shall install, maintain, and continuously operate a~~ **"TO COMPLY WITH SECTION D.5 (a)**

OR (b) "SHALL MONITOR THE" temperature ~~probe~~ in the fountain solution reservoir below the solution surface.

(2) ~~The temperature probe shall be attached to a continuous recording device such as a strip chart, recorder, or computer.~~ **"THE FOUNTAIN SOLUTION TEMPERATURE SHALL BE RECORDED AT LEAST ONCE PER 8-HOUR SHIFT".**

(d) Cleaning Solution

(1) For any offset lithographic printing press ~~with continuous cleaning equipment, flow~~ **"COMPLYING WITH THE CLEANING SOLUTION VOC CONTENT LIMITS OF D.5 (d) (1) FOR AUTOMATIC BLANKET CLEANING EQUIPMENT,** meters are required to monitor water and cleaning solution ~~flow rates~~ **"CONSUMPTION".** The ~~flow~~ meters should be ~~calibrated~~ **"MONITORED"** so that the VOC content of the mixed solution complies with the requirements of ~~D.5(c) above.~~ **"D.5 (d) (1) ABOVE". "IN THE ABSENCE OF METERS, VOC CONCENTRATION AND CONSUMPTION SHALL BE MONITORED AT THE RESERVOIR USING AVAILABLE CALIBRATION, OR";.**

(2) "FOR ANY OFFSET LITHOGRAPHIC PRINTING PRESS COMPLYING WITH THE CLEANING SOLUTION VAPOR PRESSURE LIMITS OF D.5 (d) (2) FOR AUTOMATIC BLANKET CLEANING EQUIPMENT, MANUFACTURER'S DATA ON VOC CONTENT AND VAPOR PRESSURE MAY BE USED TO DEMONSTRATE COMPLIANCE WITH THE REQUIREMENTS OF D.5(d) (2) ABOVE".

D.9 REPORTING/RECORDKEEPING

(a) The owner or operator of any offset lithographic printing press shall record and ~~report~~ **"MAINTAIN"** the following ~~key~~ parameters on a ~~regular~~ **"DAILY"** basis.~~, but no less than once per 8-hour shift.~~

(1) ~~The type of control device operating on the heatset offset lithographic printing press and the operating parameters specified in D.8(a) above.~~ **" T H E OPERATING PARAMETERS SPECIFIED IN D.8 (a) ABOVE FOR THE CONTROL DEVICE OPERATING ON THE OFFSET LITHOGRAPHIC PRINTING PRESS".**

~~(2) The equipment standard selected to comply with the requirements in D.5(a) through (e) above.~~

~~(3)~~ **"(2)"** The **"MATERIALS AND"** the VOC content of the fountain and cleaning solutions, to comply with the requirements in D.5(a) through (e), D.8(b), and D.8(d) above.

~~(4)~~ **"(3)"** The temperature of the fountain solution to comply with the requirements in D.8(c) above, if applicable.

~~(5)~~ **"(4)"** For manual cleaning methods, the amount of cleaning solution and amount of water added per batch of cleaning solution mixed.

~~(6)~~ **"(5)"** For automatic ~~cleaning methods, the flow rates of water~~ **"BLANKET CLEANING EQUIPMENT, THE CONSUMPTION OF WATER"** and cleaning solution concentrate, as specific in D.8(d) above **"IF APPLICABLE"**.

~~(7) Corrective actions taken when exceedances of any parameters monitored according to the requirements of D.6 through D.8, above, occur~~.

APPENDIX D

OFFSET LITHOGRAPHIC PRINTING
CTG MODEL RULE

D.1 INTRODUCTION

This appendix presents a model rule to limit volatile organic compound (VOC) emissions from offset lithographic printing operations. This rule is for informational purposes only and, as such, is not binding on the air quality management authority. However, EPA expects that State and local air quality rules developed pursuant to this CTG will address all the elements covered in the model rule.

The remainder of this appendix contains the model rule. Separate sections cover the following rule elements: applicability, definitions, emissions standards, equipment standards, emissions standards testing, equipment standards testing, monitoring requirements, and reporting/recordkeeping.

D.2 APPLICABILITY

The provisions set forth in this model rule apply to the offset lithographic printing industry only. There are four types of offset lithographic printing: heatset

web, non-heatset web (non-newspaper), non-heatset sheet-fed, and newspaper (non-heatset web). An affected facility may be defined as follows: one or more printing operations involved in at least one type of offset lithographic printing process.

Other types of printing operations, such as flexography, rotogravure, or letterpress, may be present in an offset lithographic printing facility; however these operations are not subject to the requirements set forth in this model rule.

Any dryer exhaust stream for which an existing control device is employed to control VOC emissions should not be required to meet **"THE PERCENT REDUCTION OR EMISSIONS LIMITS SPECIFIED IN SECTION D.4(A) OF THE MODEL"** rule until the control device is replaced for other reasons. In other words, no facility should be required to upgrade or replace a control device that is in place before the date of this regulation, provided that the device **"MEETS THE APPLICABLE STATE RACT REQUIREMENTS FOR THE"** destruction **"OR RECOVERY"** of VOC's and is operated and maintained in accordance with the procedures described in Sections D.6, D.8, and D.9.

D.3 DEFINITIONS

Alcohol substitutes. Non-**"ISOPROPYL"** alcohol additives that contain VOC's and are used in the fountain solution. Some additives are used to reduce the surface tension of water; others (especially in the newspaper industry) are added to prevent piling (ink build-up).

Cleaning solution. **"LIQUID SOLVENTS"** used to remove ink and debris from the surfaces of the printing press and its parts.

Dampening System. Equipment used to deliver the fountain solution to the ~~press~~ **"LITHOGRAPHIC PLATE".**

Fountain Solution. A mixture of **"PRIMARILY"** water, **"OTHER CHEMICALS, AND ADDITIVES THAT REDUCE THE SURFACE TENSION"** reduces the surface tension of the water so that it spreads easily across the printing surfaces. The fountain solution wets the non-image areas so that the ink is maintained within the image areas. Isopropyl alcohol, **"OR ALCOHOL SUBSTITUTES ARE COMMONLY** used to reduce the surface tension of the fountain solution.

Heat-set. **"A WEB PRINTING OPERATION"** where heat is required **"TO EVAPORATE"** the printing ink **"OILS". "HEATSET"** dryers are used to deliver the heat.

HEATSET DRYER **"A DEVICE TO HEAT THE PRINTED SUBSTRATE AND TO PROMOTE EVAPORATION OF INK OILS".**

Lithography. A **"PRINTING"** process where the image and non-image areas are chemically differentiated; the image area is oil receptive and the non-image area is water receptive. This method differs from other printing methods, where the **"IMAGES ARE PRINTED FORM RAISED OR RECESSED"** surface.

Non-Heatset. **"A LITHOGRAPHIC OPERATION"** where the printing inks are set without the use heat. For the purposes of this rule, ultraviolet-cured **"AND ELECTRON BEAM-CURED"** inks are considered non-heatset.

Offset. A printing process that transfers the **"INK FILM FROM THE LITHOGRAPHIC PLATE"** to an intermediary surface **"(BLANKET)"**, which, in turn transfers the **"INK FILM"** to the printing substrate.

Press. A printing production assembly **"COMPOSED OF ONE OR MORE"** units to produce a **"PRINTED SUBSTRATE"**.

RECIRCULATION RESERVOIR. **THE COLLECTION TANK WHICH ACCEPTS FOUNTAIN SOLUTION RECIRCULATED FROM PRINTING UNIT(S). THE TANK COMMONLY CONTAINS A COARSE FILTER TO**

REMOVE CONTAMINANTS FORM THE FOUNTAIN SOLUTION AS WELL AS THE COOLING COILS FOR REFRIGERATION.

Sheet-fed. **"A PRINTING"** operation where **"INDIVIDUAL SHEETS OF SUBSTRATE ARE"** ~~is~~ fed to the press **"SEQUENTIALLY"**.

Unit. The smallest complete **"PRINTING"** component of a printing press.

Web. A continuous roll of paper used as the printing substrate.

D.4 EMISSION STANDARDS

(a) Any person who owns or operates a heatset offset lithographic printing press shall reduce VOC emissions from the press dryer exhaust by **"90"** weight- percent of total organics (**"LESS"** methane and ethane) or maintain **"A CONTROL DEVICE"** outlet concentration of, **"LESS THAN 50 PPMV AS C_1 "** whichever is less stringent.

D.5 **"PROCESS STANDARDS"**

(a) Any person who owns or operates a web-fed offset lithographic printing press that uses **"ISOPROPYL"** alcohol in the fountain solution shall **"MAINTAIN"** total fountain solution VOC's **"AT 8 PERCENT"** or less (by volume).

Alternatively, a standard of **"12"** percent or less (by volume) VOC may be used if the fountain solution containing alcohol is refrigerated to less than 60°F.

(b) Any person who owns or operates a sheet-fed offset lithographic printing **"PRESS THAT USES ISOPROPYL ALCOHOL IN THE FOUNTAIN SOLUTION SHALL MAINTAIN TOTAL FOUNTAIN SOLUTION VOCS AT 10 PERCENT OR LESS (BY WEIGHT).** Alternatively, a standard of **"15"** percent or less (by volume) VOC may be used if the fountain solution containing alcohol is refrigerated to below 60 °F.

"(c)" Any person who owns or operates any type of offset lithographic printing press shall be considered in compliance with this regulation if the only VOC's in the fountain solution are in non-**"ISOPROPYL"** alcohol additives or alcohol substitutes, so that the concentration of VOC's in the fountain solution is **"5"** percent or less (by weight). (The fountain solution should not contain any alcohol.)

"(d)" Any person who owns or operates an offset lithographic printing press shall reduce VOC emissions from cleaning solutions by using cleaning solutions with a 30 percent or less VOC content. **"OR A VOC CONTENT OF 900 GRAMS OR LESS OF VOC PER LITER OF MATERIAL AND A VOC COMPOSITE PARTIAL PRESSURE OF 25 MM HG OR LESS AT 20~~0~~0C (68 °F)".**

D.6 EMISSIONS STANDARDS TESTING

(a) For the purpose of demonstrating compliance with the emission control requirements of this rule, the affected **"SOURCE"** shall be run at **"THE MAXIMUM PRACTICAL"** operating conditions and flow rates **"COMPATIBLE WITH SCHEDULED PRODUCTION DURING COMPLIANCE TESTING"**

(b) **"EMISSION TESTS FOR SOURCES INSTALLED AFTER THE EFFECTIVE DATE OF THIS REGULATION SHALL INCLUDE AN INITIAL TEST WHEN THE CONTROL DEVICE IS INSTALLED THAT DEMONSTRATES COMPLIANCE WITH EITHER THE 90 WEIGHT-PERCENT REDUCTION OR THE 50 PPMV AS C_1 EMISSIONS LIMITS SPECIFIED IN D.4(A)".**

(c) The following EPA methods (in 40 CFR 60, Appendix A) shall be used to demonstrate compliance with the emission limit or percent reduction efficiency requirements listed in D.4 (a) above. **"ALTERNATE METHODS MAY BE USED WITH THE APPROVAL OF THE ADMINISTRATOR".**

(1) EPA Method 1 or 1A, as appropriate, **"MAY"** be used for selection of the sampling sites. The control device inlet sampling site for determining efficiency in

reducing total organics (less methane and ethane) from the dryer exhaust shall be placed before the control device inlet and after the dryer.

(2) EPA Method 2, 2A, 2C, or 2D, as appropriate, **"MAY"** be used to determine the volumetric flow rate of the exhaust stream.

(3) **"EPA METHOD 18, 25, OR 25A, AS APPROPRIATE, MAY BE USED TO DETERMINE EMISSIONS FROM HEATSET DRYER AND CONTROL DEVICE EXHAUSTS".** Good judgement is required in determining the best applicable VOC test method for each situation.

(i) Since EPA Method 25 has a minimum detectable concentration of 50 ppm carbon, and given the low concentration of VOC's sometimes present in dryer exhaust from offset lithographic presses and the high removal efficiency achievable with add-on controls, EPA Method 25A may be more suitable than EPA Method 25 for determining compliance. **"~~TO A TEMPERATURE ABOVE THAT OF THE GAS STREAM, E.G., 350°F"~~.** Note that EPA Method 25 specifies a <u>minimum</u> probe and filter temperature of 265°F. To prevent condensation, the probe and filter should be heated to **"A TEMPERATURE ABOUT THAT OF THE GAS STREAM, E.G., 350°F".**

(ii) EPA Method 25A utilizes a flame ionization detector (FID), which had the ability to measure low concentrations. This technique usually is not recommended

for **"INCINERATOR OUTLETS WITH VOC CONCENTRATIONS IN EXCESS OF 50 PPM AS C_1. HOWEVER, EPA METHOD 25A IS PREFERRED FOR INCINERATORS WHERE EXPECTED OUTLET CONCENTRATIONS WILL BE BELOW 50 PPM AS C_1 OR WHERE DRYERS FROM MULTIPLE PRESS LINES DISCHARGE INTO A CENTRAL CONTROL DEVICE".**

D.7 EQUIPMENT STANDARDS TESTING

(a) Fountain Solution Testing

(1) A **"COMPOSITE"** sample of the fountain solution (as used) shall be taken from the from **"EACH SUBJECT PRESS TO DETERMINE"** fountain solution VOC content in accordance with section D.5 (a) through (d) above.

(2) **"RECORDS OF FOUNTAIN SOLUTION COMPOSITION (AS MIXED) MAY BE USED TO DETERMINE THE VOC CONTENT OF THE FOUNTAIN SOLUTION".**

(b) Refrigeration Equipment Testing

(1) A thermometer or other temperature detection device capable of reading to 0.5°F shall be used to ensure that a refrigerated fountain solution containing alcohol is below 60°F.

(c) Cleaning Solution Testing

(1) **"SAMPLES"** of the cleaning **"SOLUTIONS"** (as used) shall be taken to demonstrate compliance with the cleaning solution VOC content **"OR VAPOR PRESSURE** imitations listed in D.5 **"(d)"** above.

(2) **"RECORDS OF CLEANING SOLUTION COMPOSITION (AS MIXED) TOGETHER WITH MATERIAL SAFETY DATA SHEET INFORMATION MAY BE USED TO DETERMINE THE VOC CONTENT OF THE CLEANING SOLUTION. ALTERNATIVELY, VOC CONTENT OR VAPOR PRESSURE AS PROVIDED BY THE MANUFACTURER MAY BE USED TO DEMONSTRATE COMPLIANCE WITH THE REQUIREMENTS OF D.5 (D)".**

D.8 MONITORING REQUIREMENTS

(a) Add-on Dryer Exhaust Control Devices

(1) The owner or operator of a heatset offset lithographic printing press **"EQUIPPED WITH AN AFTERBURNER"** shall install, calibrate, maintain, and operate a, according to the manufacturer's instructions, **"CONTINUOUS TEMPERATURE MONITORING EQUIPMENT TO MONITOR THE COMBUSTION CHAMBER TEMPERATURE OF THERMAL AFTERBURNERS OR THE TEMPERATURE RISE ACROSS A CATALYTIC AFTERBURNER BED. THE COMBUSTION CHAMBER OR CATALYST INLET TEMPERATURE SHOULD BE SET DURING TESTING REQUIRED TO DEMONSTRATE COMPLIANCE WITH THE EMISSION STANDARDS OF D.4 (A)".**

(2) The temperature monitoring device shall be equipped with a continuous recorder and shall have an accuracy of **"5°F"**.

(3) The dryer pressure shall be maintained lower than the press room air pressure such that air flows into the dryer at all times. **"THE CAPTURE EFFICIENCY FOR THE DRYER SHALL BE DEMONSTRATED USING AN AIR FLOW DIRECTION INDICATING DEVICE".**

(b) Fountain Solution VOC Concentration

(1) **"RECORDS OF FOUNTAIN SOLUTION COMPOSITION (AS MIXED) MAY BE USED TO DETERMINE THE VOC CONTENT OF THE FOUNTAIN SOLUTION; OR".**

(2) The owner or operator of any offset lithographic printing press ~~shall~~ **"MAY"** monitor fountain solution VOC concentration **"AT LEAST ONCE PER BATCH"** with a refractometer that is corrected for temperature. The refractometer shall have **"A VISUAL, ANALOG"** or digital readout with an accuracy of 0.5 percent VOC. A standard solution shall be used to calibrate the refractometer for the type of VOC used in the fountain. **"SOLUTION; OR"**

(3) The owner or operator of any offset lithographic printing press may monitor fountain solution VOC concentration with a hydrometer equipped with a temperature correction **"AT LEAST ONCE PER BATCH WITH A HYDROMETER THAT IS CORRECTED FOR TEMPERATURE"**. The hydrometer shall have **"A VISUAL, ANALOG"** or digital readout with an accuracy of 0.5 percent VOC.

(c) Fountain Solution Temperature

(1) The owner or operator of any offset lithographic printing press using

refrigeration equipment ~~on~~ **"FOR"** the fountain **"SOLUTION" "TO COMPLY WITH SECTION D.5 (a) OR (b) "SHALL MONITOR THE"** temperature in the fountain solution reservoir below the solution surface.

(2) **"THE FOUNTAIN SOLUTION TEMPERATURE SHALL BE RECORDED AT LEAST ONCE PER 8-HOUR SHIFT".**

(d) Cleaning Solution

(1) For any offset lithographic printing press **"COMPLYING WITH THE CLEANING SOLUTION VOC CONTENT LIMITS OF D.5 (d) (1) FOR AUTOMATIC BLANKET CLEANING EQUIPMENT,** meters are required to monitor water and cleaning solution **"CONSUMPTION"**. The meters should be **"MONITORED"** so that the VOC content of the mixed solution complies with the requirements of **"D.5 (d) (1) ABOVE". "IN THE ABSENCE OF METERS, VOC CONCENTRATION AND CONSUMPTION SHALL BE MONITORED AT THE RESERVOIR USING AVAILABLE CALIBRATION, OR";.**

(2) "FOR ANY OFFSET LITHOGRAPHIC PRINTING PRESS COMPLYING WITH THE CLEANING SOLUTION VAPOR PRESSURE LIMITS OF D.5 (d) (2) FOR AUTOMATIC BLANKET CLEANING

EQUIPMENT, MANUFACTURER'S DATA ON VOC CONTENT AND VAPOR PRESSURE MAY BE USED TO DEMONSTRATE COMPLIANCE WITH THE REQUIREMENTS OF D.5(d) (2) ABOVE".

D.9 REPORTING/RECORDKEEPING

(a) The owner or operator of any offset lithographic printing press shall record and "**MAINTAIN**" the following ~~key~~ parameters on a "**DAILY**" basis.

(1) **THE OPERATING PARAMETERS SPECIFIED IN D.8 (a) ABOVE FOR THE CONTROL DEVICE OPERATING ON THE OFFSET LITHOGRAPHIC PRINTING PRESS".**

"**(2)**" The "**MATERIALS AND**" the VOC content of the fountain and cleaning solutions, to comply with the requirements in D.5(a) through (e), D.8(b), and D.8(d) above.

"**(3)**" The temperature of the fountain solution to comply with the requirements in D.8(c) above, if applicable.

"(4)" For manual cleaning methods, the amount of cleaning solution and amount of water added per batch of cleaning solution mixed.

"(5)" For automatic ~~cleaning methods, the flow rates of water~~ **"BLANKET CLEANING EQUIPMENT, THE CONSUMPTION OF WATER"** and cleaning solution concentrate, as specific in D.8(d) above **"IF APPLICABLE"**.

GRAPHIC ARTS
TECHNICAL FOUNDATION

GRAPHIC ARTS TECHNICAL FOUNDATION • 4615 FORBES AVENUE • PITTSBURGH, PENNSYLVANIA 15213-3796 • 412/621-6941 • FAX: 412/621-3049 • TELEX: 9103509221

COMMENTS
on
DRAFT CONTROL TECHNIQUES GUIDELINE - OFFSET LITHOGRAPHIC PRINTING

by
William D. Schaeffer
Chairman, Technical Committee, ECB
Consultant to Graphic Arts Technical Foundation
Research Director (ret.), Graphic Arts Technical Foundation

November 20, 1991

COMMENTS
on
DRAFT CONTROL TECHNIQUES GUIDELINE -
OFFSET LITHOGRAPHIC PRINTING

by
William D. Schaeffer
Chairman, Technical Committee, ECB
Consultant to Graphic Arts Technical Foundation
Research Director (ret.), Graphic Arts Technical Foundation

Our industry greatly appreciates the opportunity to comment on the Draft CTG document for Offset Lithographic Printing. We have provided to you and the USEPA in-depth comments and line-by-line critiques on the Draft CTG and the model CTG Rule (Appendix D). Time is inadequate to review this material in all of the detail that it deserves. Mr. Bender has reviewed the offset lithographic printing processes and the segments of the printing industry in which the processes are used. He has pinpointed and explained many of the shortcomings of the present document and the recommendations for RACT.

My purpose is to review critically three areas in the CTG:

(1) The assumptions used in developing the heatset web offset model plants and their consequences,

(2) RACT recommendations for process materials, i.e., fountain solution and cleaning solutions, and

(3) Unrecognized administrative burdens and subsequent costs, particularly for the sheetfed printer.

Heatset Web Offset Model Plants

The assumptions that the printing unit in heatset web offset

presses contains only a single blanket (Table 3-1, p. 3-44) is in direct conflict with the dominant press design in this industry segment, the blanket-to-blanket printing unit. As a consequence, the average number of units per press are estimated as 4 to 6 as opposed to the correct 8 to 10 for the four or five printing couples in blanket-to-blanket presses. Underestimation of the number of units per press and per plant causes an overestimate of ink consumption per unit. Our calculation indicates the number is 1.6 to 2 times greater than it should be. Thus the ink consumption per press unit as estimated from industry surveys (Sections 3.6.1, p. 3-46 and 5.1.1., p. 5-1) should be 5.7 instead of 10.3 pounds per unit-hour. Usage of fountain solution, based on a fixed ratio to ink consumption, therefore, is also too large. The overall effect is to exaggerate the VOC content of heatset ink and fountain solution used annually in the process (Table 3-3, p. 3-47) and the potential VOC emission reductions as a result of the controls proposed as RACT (Table 5-2, p. 5-6).

RACT Recommendations for Process Materials

The large majority of the offset lithographic printers affected by the Control Techniques Guideline are the sheetfed printers. The impact on the operations is through the proposed materials standards, namely, fountain solutions (Sections D.5 (a) through (d)) and cleaners (Sections D.5 (e)) and the proposed monitoring (Sections D.7 (a) through (c) and D.8 (b) through (d)) and record keeping requirements. In brief, the industry assessments of the draft proposals are:

(1) the proposed reductions in isopropanol use in the fountain solution are excessive (D.5 (a) through (d)),

(2) the concept that a large sheetfed plant can reduce isopropanol use more readily than a small plant is without basis (D.5 (c)),

(3) the proposed use of a 30 percent VOC content cleaner as a universal cleaner to replace the current 100 percent VOC blanket and press cleaners is not a demonstrated capability (D.5 (e)). Moreover, excess volumes of cleaner would be required to achieve comparable results.

Every one of these three proposals will require additional non-productive make-ready time between jobs and increase the amount of print waste produced, while attempting to achieve the desired print quality. Ironically, the proposed excessive reductions in VOC use promises to multiply solid print waste production, a poor environmental and a poor economic trade-off.

Additional critical assessments of Draft CTG proposals include the following:

(4) suggestion of a method (modified Method 24) still in development for the measurement of VOC content in aqueous systems provides absolutely no basis for criticism and is certainly inadequate for the CTG (Sections D.7 (a) and D.7 (c)(2)), and

(5) the proposed number of sampling sites (Section D.7 (a)(1)), the frequency of sampling (D.9 (a)), the analyses of samples (D.8 (b) and (c)), and record keeping (D.9 (a)(3) through (6)) comprise demands which

none in the sheetfed industry except the largest firms are equipped to handle. These requirements, moreover, track only the VOC concentrations in the materials used in the processes.

From the sheetfed printer's perspectives, these last two sets of requirements, (4) and (5), virtually insure that the printer establish a laboratory with trained technicians. These facilities do not exist today, and involve an investment totally ignored in the CTG draft. The investment, moreover, contributes nothing to an improved environment.

Industry Suggestions

Corrective measures are described in detail in the industry line-by-line comments on Appendix D of the Draft CTG. Our recommendation, in brief, are the following:

(1) the proposed concentrations in isopropanol fountain solution concentrations to be greater than the draft proposal, e.g., 10 instead of 6 and 15 instead of 10 percent VOC,

(2) eliminate the proposed differences between fountain solution VOC content in small and large sheet-fed pressrooms,

(3) distinguish between blanket and press cleaners and establish an upper vapor pressure limit on 900 gram/liter VOC cleaners, which provide for efficient operations,

(4) the printer allowed to use manufacturing suppliers data

on VOC content of solution components plus mixing formulations to calculate VOC content rather than experimental determination, and

(5) a reduction in the number of sampling sites, the frequency of measurements, the methods and quality of measurements are all suggested modifications.

The largest group of offset lithographic printers to be affected by the CTG will be the sheetfed printers. Our industry committee believes that our suggestions will reduce VOC emissions with minimal waste increases and limited financial costs. We appreciate your attention to our suggestions and requests. Their inclusion in the Control Techniques Guideline will make the document more effective and less frustrating to the regulated community and beneficial to the environment.

Comments to Environmental Protection Agency, Chemicals and Petroleum Branch made by C.Wm. Schneidereith representing Schneidereith & Sons, Inc. on November 20, 1991.

Schneidereith & Sons is a small/medium sized commercial printing establishment located in Baltimore, Maryland, and currently utilizing the printing process most prevalent today which is sheet-fed, offset lithography.

Employing about 60 people, this firm is in the upper 20 percentile (by size) of printing firms. 80 percent of all commercial firms employ 25 people or less, and only 20 percent of the firms employ more than 25 people.

Equipment operated daily on a two shift basis are the following:

(1) Six-color Miller TP104	41	inch width
(1) Six-color Miehle Roland	41	inch width
(1) Four-color Miller TP38	38	inch width
(1) Two-color Miller TP104	41	inch width
(1) Single-color Miehle	29	inch width
(1) Single-color Heidelberg	20	inch width

Total of 20 printing units in operation.

Currently we are using the following volumes of materials which contain VOC concentrations.

Ink	@	18,077	pounds per year
Cleaning Solvents	@	1,980	gallons per year converts to 12,084 pounds per year
Isopropyl Alcohol	@	-0-	none used.
Alcohol substitutes	@	52	gallons per year

Calculations of the above usage rates yield VOC emissions as follows:

Ink	@	0.11	tons VOC's per year emitted
Cleaning solvents	@	5.13	tons VOC's per year emitted
Alcohol substitutes	@	0.39	tons VOC's per year emitted

Impact of Control Techniques Guideline (CTG) dated September 6, 1991.

This firm has demonstrated that alcohol can be completely eliminated from the lithographic process and still maintain the highest of quality standards in so doing. This firm produces art catalogs for many of the leading museums in Washington and New York along with the most difficult advertising and commercial print projects. Since isopropyl alcohol represents one of the greatest culprits in the quest to reduce VOC's in the printing industry, emphasis should be given to the technical and educational aspects of weaning this industry completely away from its use.

Operating a complete facility without alcohol is not an easily accomplished task. For example, the rubber rollers used to apply the alcohol substitute & water combination must be maintained in superior condition and the durometer of the roller (its softness) is critical to the success of alcohol substitutes. This is an expensive process to constantly monitor roller condition and durometer. Rollers must be changed out and replaced far more frequently without alcohol than with alcohol.

Roller settings are more critical when not using alcohol. Alcohol tends to cover many mechanical sins. These settings are time consuming and require the attention of the top paid craftsmen (not more lowly paid helpers). These settings must be checked and adjusted more frequently due to the fact that without alcohol one has a more limited tolerance range.

If alcohol can be eliminated from the process, it is not logical that the temperature must be continuously monitored by probes and recorded for each fountain unit. Without alcohol the VOC reduction is of substantial proportions in itself, and the substitutes are used in such small volume that the total VOC emission is not a significant number. Also, the vast majority of dampening systems in operation today are refrigerated due to the need to maintain constant percentage of alcohol in the fountain solutions. Printers who do not

maintain a constant percentage of alcohol will see unacceptable variations in the print quality. Thus, refrigeration was adapted to dampening fountains in attempts to control the evaporation rate of alcohol purely for quality reasons. Should one unit of refrigeration malfunction and the temperature thereby increase, an operator is forced to repair it to provide consistency of quality. So the process itself of causing erratic quality ensures the repair and maintenance of such equipment -- thereby making the need to install probes and recording devices redundant and in our opinion not necessary.

The experience and learning curve to run high-quality work without alcohol is significant. The experimental phase of testing alcohol substitutes in <u>one</u> fountain on a multi-color press lasted approximately two months. Once alcohol substitutes are introduced into the <u>entire</u> press we noted the real impact of the learning curve:

a) Dampening changes are more difficult to effect using alcohol substitutes.

b) Roller problems are more critical

c) Roller replacements become major cost item.

d) Build-up of by-products on ink rollers cause inking irregularities

e) Dot gain is increased as dampening efficiency decreases due to elimination of alcohol

f) Maintenance is more critical in dampening units and inking units.

g) Spoilage due to color being "out of tolerance" is more prevalent due to difficulty in balancing water and ink. (Cost of reprinting entire jobs can be extremely high.)

(Suggestion) Monitor fountain solutions with testing for VOC concentration and temperature <u>only</u> on those units using alcohol. <u>Refrigeration</u> should <u>not</u> be the issue here -- but rather alcohol. Testing refrigerated fountain solutions is not going to be program effective and will do practically nothing toward the goal of reducing VOC emissions. The lithographic printing <u>process</u> itself will

"police" the industry in maintaining refrigerated units to correct temperatures. However, testing those fountain units which use alcohol -- whether refrigerated or not refrigerated -- would be program effective. But since there is nothing to prohibit non-refrigerated fountains from using isopropyl alcohol, these units should be addressed in the scheme of imposing controls.

Sec. D-8, C 1-2 stipulates that on ". . . any press using refrigeration . . . shall install, maintain and operate a temperature probe . . .". No mention made of non-refrigerated units. It should be more important to monitor the non-refrigerated units, especially if using isopropyl alcohol.

The monitoring process itself is burdensome, especially to the small operators. To install the monitors, educate those responsible, and detail a person to record and maintain the records will be a very real cost, which in my estimation will yield negligable results in reducing VOC emissions. In a small shop -- such as the majority of printing establishments are -- this will pose a detrimental burden on management which is already over worked and frustrated by a myriad of regulations and paper work. I know of not one small shop which can afford the payroll of someone to monitor fountains every eight hours.

If monitoring is deemed necessary it would be sufficient to monitor and record the results on every separate batch of fountain solution when mixed. Regardless of what is being tested for, it will not materially change while in the process of being used. Here again the printer and process itself will "police" the results because if that batch of fountain solution does change, it will show up as unacceptable quality and force the operator to shut down.

Create the incentive for the owner/operator to explore alternatives and substitutes instead of imposing yet another layer of non-productive cost in an industry facing competitive pressures from over-seas.

Cleaning solutions are a unique problem and also a dilemma to printers.

A rag with solvent can easily be rubbed over an inked surface and the ink thereby removed. (The key work is "rubbed"). A multitude of solvents could pass this usage test easily, regardless of VOC content. Few of the applications of cleaning solvents are this simple though.

Consider the structure of an inking unit on a printing press. Current sheet-fed press equipment use approximately 20 - 22 rollers in each printing unit. The diagrams on pages 2-2 and 3-6 are over simplifications of roller configurations for the average sheet-fed press. Your diagrams show 11 ink rollers, whereas the sheet-fed presses used today have 20 to 22 ink rollers. Thus a six-color press will have from 120 to 132 rollers which will require cleaning at least once per day -- possibly several times. The surfaces of some of these rollers are not visible, being surrounded by the outer rollers. The cleaning solutions of products with 30 percent or less VOC concentrations will not dry properly and those inner rollers will not clean-up well. It is imperative that the cleaning solutions used on press rollers will:

a) clean properly,

b) dry reasonably quickly,

c) not leave a residual film.

It is impossible to access some of the ink rollers to hand wipe the residual solvent without a major disassembly of the inking system which would include a day-long process.

The percentage of VOC mandated for cleaning solvents should be analyzed carefully and researched by technical experts thoroughly knowledgeable of press equipment and the unique constraints various ink systems impose upon the printer. To do otherwise, the printer cannot operate. I cannot believe the 30 percent VOC limit will yield an acceptable roller solvent. The Roller wash we currently use, which is giving satisfactory results, contains 84 percent VOC's. It is incomprehensible to me that we could find an acceptable roller wash containing only 30 percent VOC's. To attempt to use an unsatisfactory

product would cripple our operation.

Ink VOC emissions are not as critical to the small/medium sheet-fed lithographer as to the larger operators simply because they use less volume/poundage. However, such factors as drying, scuff resistance, appearance, and handling on press are all important. The recent introduction of vegetable-based inks such as soy-bean is promising but the results do not indicate that petroleum-based inks can be phased out any time in the foreseeable future. There are problems contingent with the vegetable-based inks that small operators simply do not have the access to technology and research to properly make that transition at this point in time.

SUMMARY

The monitoring requirements as set forth in Section D.8 (b) "Fountain Solution VOC Concentration" definitely pose an onerous and costly imposition upon the small/medium operators and should be amended to apply only if isopropyl alcohol is used in the fountain, and then only applied on a "batch" basis instead of every 8-hours. Once tested a "batch" will not change significantly in VOC concentration.

The Section D.8 (c) "Fountain Solution Temperature" should only be imposed on those units using isopropyl alcohol. This section targets "refrigeration equipment" when it should target alcohol. There should not be the need to test any press which uses alcohol substitutes.

Cleaning solutions should be researched by those intimately familiar with printing press inking systems prior to mandating a specific percentage of VOC concentration.

Respectfully submitted,

C. Wm. Schneidereith, Jr.

President

1.2 QUESTIONS AND COMMENTS FROM THE COMMITTEE

Question: Why is industry not taking advantage of the large cost savings due to a reduction in alcohol?

Response: The industry has reduced alcohol for Occupational Safety and Health Administration (OSHA) regulations and fire insurance benefits. However, it is easier for the operator to use too much isopropyl alcohol (IPA) because it makes the press easier to operate and keep within specifications.

Question: Will ink pigments poison the catalyst in a catalytic incinerator and can the incinerator actually achieve 95 percent control?

Response: It may not be ink pigments that poison the catalyst - other ingredients in the inks and in the fountain solution may poison the catalyst in many cases. Most vendors work with the printers in choosing the best catalyst for their operation. Industry has successfully used catalysts without poisoning. As for control, current use in industry indicates that the catalytic incinerator can achieve 98 percent control.

Question: Do the 16,700 facilities in non-attainment areas, as referred to in the presentation, take into account the newly revised non-attainment area boundaries?

Response: Since the boundaries were only revised about a week before this meeting, there was no time to take into account the changes and redo the numbers for this presentation.

Question: How are the very small and large model plants differentiated?

Response: The size of the plants are determined by the number of printing units.

Question: Were the operating costs of incinerators based on 3000 operating hours per year, and are the incinerators shut down at all other times?

Response: Some incinerators may shut down, while others may "idle" during the off-hours, making warm up

unnecessary. Energy costs were calculated based on 3000 operating hours per year.

Comment: The wording in the draft CTG should be clarified to ensure that monitoring should take place only when the unit is operational.

Question: Would reformulation of the inks to soybean inks be a viable control option for the larger facilities?

Response: Soy inks are used in non-heatset processes, which have low emissions to begin with. Requiring heatset processes to change to non-heatset was not considered reasonable, and hence were beyond the scope of RACT.

Question: The total percent reduction is plausible based on what the control device sees, but given the amount of potential emissions, does this really correspond to what the control device actually sees?

Response: We may have not made it very clear that the efficiency values refer to the efficiency of the control device and not the percent of all VOC's applied to the substrate. There is approximately 20 percent retention of VOC's from ink in the paper.

Question: Do all the volatile organic compounds (VOC) from heatset inks go out from the dryer?

Response: Essentially, all the VOC's from the inks that are volatilized exit through the dryer.

Question: Do the control options for large sheet-fed plants differ technically from other sheet-fed plants as to warrant the different control options? What is the difference between these two types of plants and why can't control for one unit be the same for 24 units?

Response: The lower level of control for larger plants was due to the fact that large plants could cope with the costs better than smaller plants.

Question: Since the alcohol content of the fountain solution is falling with changes in the industry, what year were the model plants emissions based on?

Response: The use of fountain solution in the model plant was based on a report of a survey performed for a meeting held in 1989; the meeting notes were published in 1990.

Question: Is there a point in which the performance of the fountain solution decreased a great deal due to a reduction in alcohol?

Response: There is no perfect linear relationship between alcohol content and performance; with a management commitment to quality, a reduction in alcohol should not be a problem.

Question: What are alcohol substitutes made of?

Response: They are made up of cellulose derivatives, propylene glycol, and glycol ethers. Material safety data sheets (MSDS) do not indicate what makes up the VOC content or what the hazardous air pollutant (HAP) content is, and, since many vendors feel that the fountain solution ingredients are proprietary, it is difficult to identify all the ingredients of fountain solution additives.

Comment: Inks should be considered differently than coatings and the structure of the model rule should be changed to indicate this difference.

Comment: There were some reservations that requiring lower VOC cleaning solution (<30 percent VOC) would reduce the number of different cleaning products available and would thereby impede the cleaning process, since one cleaning solution typically cannot be used for every application. Some printers use 100 percent VOC cleaning solution and maintain that there is no viable substitute.

Response: Users of the lower VOC cleaning solution exist and say that they are able to use these cleaners successfully. The EPA is trying to obtain more complete data on this issue and will address it in the future.

2.0 DISCUSSION SECTION

2.1 AGI ROSOS, PRESIDENT, ROSOS RESEARCH LABORATORIES, INC.

2.1.1 Presentation

Ms. Agi Rosos of Rosos Research Laboratories, Inc. gave a presentation on alcohol substitutes. Rosos Research Laboratories has been a manufacturer of alcohol replacements for over 21 years. Ms. Rosos read from a prepared speech that is enclosed.

2.1.2 Questions and Comments

Question: Glycol ethers were mentioned as a component of the fountain solution. Since glycol ethers are HAP's, are VOC's being replaced by an equally harmful chemistry?

Response: Ms. Rosos responded that while the first few formulations did indeed contain HAP's, Rosos has completely reformulated the product and are currently testing the new HAP-free formulation.

Question: Where does OSHA stand on alcohol replacements?

Response: The response was that these substitutes are well within the limits set by OSHA. However, the 17 percent alcohol level probably would not be allowed by most states, but printers that stay below 10 percent alcohol would generally not have any problems with OSHA.

Question: What are the differences between large sheet-fed and other sheet-fed plants, and is a control distinction necessary for the two categories?

Response: Ms. Rosos answered that a distinction is not necessary but she does encourage refrigeration on all fountain solutions.

Question: Why isn't it possible to measure the VOC content in the fountain solution by taking samples from the trays and tanks, and why should samples be taken from freshly mixed solution?

Response: The response was that the tanks and trays contain recirculated solution with residual contaminants due to contact with other parts of the press. The samples should be taken near the tap of the alcohol proportioner, as alcohol is mixed with water.

2.2 PAUL MARTIN, C.A. ENTERPRISES, LTD.

2.2.1 Presentation

Mr. Paul Martin of C.A. Enterprises, LTD. gave a presentation regarding the use of magnets in reducing the surface tension of water in the fountain solution. C.A. Enterprises has been primarily a manufacturer of magnets for the treatment of water used for heating and cooling in residential and commercial buildings uses for the last 20 years. The magnets help control lime, scale and corrosion in equipment that contacts water. Mr. Martin read from a prepared speech that is enclosed.

2.2.2 Questions and Comments

Question: If the magnets can do what you have said they will, then why aren't they used by all printers?

Response: Mr. Martin responded that the use of magnets for this industry is a completely new technology. Currently, there are approximately 1,000 units in operation. The technology was introduced to the industry in April 1990.

Question: How expensive are these magnets as compared to the cost of a press?

Response: The response was that magnets cost about $3000 per press, with a life approximately equal to that of a press. The cost of a press is approximately $1.6 to 2 million dollars.

Question: What types of modifications to the presses are necessary for retrofitting the magnets to the press?

Response: Mr. Martin responded that it took about 10 minutes to add magnets to one press. After the modification, press operators may need to make adjustments to the process. The most significant adjustment would be the speed of the water roller.

Question: Is there anything in the draft CTG that would preclude the use of these magnets?

Response: There is nothing in the draft CTG indicating that the magnets are not an option of control. In fact, the quality of the process would increase as a result of using the magnets. In addition, alcohol substitutes would become more effective since water is more soluble with the magnets. Some users run the presses with magnets and an alcohol-free fountain solution.

2.3 WILSON CUNNINGHAM, VICE PRESIDENT TECHNICAL RESEARCH, AMERICAN NEWSPAPER PUBLISHERS ASSOCIATION

2.3.1 Presentation Summary

Mr. Wilson Cunningham for the American Newspaper Publishers Association (ANPA) gave a presentation to discuss ANPA's comments on the draft CTG. The ANPA is a trade association that represents publishers of approximately 1350 newspapers. Mr. Cunningham read from a prepared speech that is enclosed.

2.3.2 Questions and Comments

Question: What is the content of ink pigments?

Response: Mr. Cunningham responded that black ink is mainly carbon black, and all color newspaper pigments are complex organic compounds.

Question: In reference to the chart in the presentation showing the recommended ranges for fountain solution and cleaning solution usage, as compared to those shown in the draft CTG, the new calculated medians seem to fall within the ranges reported in the draft CTG, so why would it be necessary to recalculate the usage rates?

Response: Mr. Cunningham responded that while the medians fell within the ranges given in the draft CTG, the upper limits of those ranges were too high. In addition the ANPA would prefer to be regulated based on real data as opposed to projected data.

Question: Since there is such a wide variation in the volatile percent of inks, could the volatile content be regulated to 10 percent or less?

Response: The response was that inks are formulated to satisfy the consumer as well as regulations. As rule of thumb, as the VOC content increases, the amount of rub off decreases, so it is important to find a middle ground to allow the least amount of rub off without significantly increasing VOC content. In general, VOC content would not go down very much.

Comment: The rule recommended by the draft CTG is not intended to be used for the purpose of emission inventories. Although credit for waste ink and solvent ink used to determine NSPS rules, it is not pertinent to the draft CTG.

2.4 JAMES RENSON, COORDINATOR ENVIRONMENTAL AFFAIRS, NATIONAL ASSOCIATION OF PRINTING INK MANUFACTURERS

2.4.1 Presentation Summary

Mr. James Renson, of the National Association of Printing Ink Manufacturers (NAPIM), gave a presentation on printing inks as related to the draft CTG. NAPIM is a national trade association representing small, medium and large printing ink manufacturers in the United States. There are 80 members in this association accounting for approximately 90 percent of the total U.S. sales of printing ink. Mr. Renson read from a prepared speech that is enclosed.

2.4.2 Questions and Comments

Question: Where are no-rub inks used?

Response: The oils in inks are absorbed leaving carbon black on the top of the substrate. A no-rub ink has more resin, but also has higher VOC content. Some examples of printers using no-rub ink are Time and Newsweek magazines.

Question: Is "Method 30" an EPA method?

Response: Mr. Renson said that "Method 30" is a California Bay Area Air Quality Management District (BAAQMD) test method. There is an ATSM method for EPA Method 24, and there will soon be an ATSM Method for BAAQMD Method 30.

2.5 ENVIRONMENTAL CONSERVATION BOARD (ECB) OF THE GRAPHIC COMMUNICATIONS INDUSTRIES

2.5.1 Gerald Bender, Vice President Environmental Affairs, R.R. Donnelley & Sons Company; Web Segment

2.5.1.1 Presentation Summary. Mr. Bender began his presentation with a discussion on the sources of VOC's. The three sources of VOC are: ink oil solvents, fountain solution additives, and cleaning solvents. Ink oil solvents were not originally considered VOC's, but when the definition of VOC was changed, the ink oils fell into the category of VOC's. These oils can be compared to No. 2 fuel oil. The need for fountain solution as well as the amount depends on the equipment. Cleaning solutions include blanket wash, auto blanket wash, roller wash, and other miscellaneous cleaning, such as equipment cleaners, plate cleaners, etc.

To explain the concept of blanket-to-blanket printing, a schematic of the unit was presented (see attachment). Ink and fountain solution are applied to a large cylinder called a print plate. The image is formed on the print plate and transferred to the blanket cylinder, and then the final image is printed on the substrate. The system shown in the schematic is called a blanket-to-blanket unit because it prints both sides of the substrate at the same time.

There are many types of applicators for fountain solutions, each one requiring a different need for alcohol or alcohol substitutes. The first type of applicator is the continuous dampening system. Fountain solution is contained in a shallow pan and, as shown on the schematic for the continuous dampening system, there are rollers that pick up the solution and carry it to the rest of the unit. In some cases, brushes or spray nozzles are used in place of rollers to transfer solution to the plate cylinder. In this case, alcohol substitutes may be used in concentrations of about 0.5 to 1 percent, but only to keep the blanket cylinder free from debris, not for high quality printing.

This schematic shows a blanket-to-blanket web offset press. For a four-color press, there would be four sequential units

followed by a dryer. Drying does not occur between colors as with rotogravure printing.

A continuous dampening system requires at least 3 to 4 percent alcohol in the fountain solution for good quality. The ECB is asking that the level of alcohol allowed be increased to 5 percent to allow a margin for error. Small printers cannot afford to not use alcohol. They need a little more latitude to add alcohol or alcohol substitutes to make the chemistry work.

Mr. Bender remarked that since the document deals with existing operations, printers cannot afford to redesign their presses to operate with less alcohol. Alcohol not only cleans the print plate, but it also changes the rheology properties of the water (i.e. lowers the surface tension of the water). Small variations in the amount of alcohol alter the viscosity of the water, and therefore change the rate at which the solution is transferred to the plate. Older presses cannot speed up their fountain rollers to accommodate the reduction in alcohol.

Mr. Bender addressed the control options next. The three types of controls are condenser filters, condenser filters with activated carbon, and incinerators (both catalytic and thermal). A recommended control level in terms of percent reduction for condenser filters does not make sense because condenser filters operate best when the loading is very high. The ECB suggested that a concentration limit should be set on the exhaust stream instead of a percent reduction.

Condenser filters with carbon work very well in removing the condensed oils from the dryer exhaust, but the oils are almost impossible to remove from the carbon. According to Mr. Bender, hot air and low pressure steam will not remove the condensed oils. Since most facilities do not have high pressure steam at their convenience, this is not a viable option. It was suggested that this type of control was a misapplication of activated carbon.

The ECB reviewed the costs for the different control options and found capital and annual cost to be slightly lower than expected. Not included in the cost analysis were costs for

safety purges of the incinerator and replacement of the filter material in the condenser filter.

The next issue addressed by Mr. Bender was the model rule in Appendix D of the draft CTG. The first topic was the applicability section (section D.2) of the model rule. The ECB would like some guidance to the States as to the definition of a major source; also, the States need information on how to apply RACT to the industry.

The ECB then suggested that the control level (for the emissions standards section (D.4) of the draft CTG) should be 90 percent instead of 95 percent to give the printer some leniency in operation.

Mr. Bender suggested changes in the equipment standards section of the draft CTG (section D.5). The changes mainly concerned raising the levels of the alcohol permitted in the fountain solution. Also, the States have required the exclusive use of EPA Test Method 25 to test heatset dryer emissions. This test, however, is not repeatable and therefore not a reliable test method for this industry.

The rest of the suggested changes for the draft CTG concern rhetoric and are attached following this summary.

2.5.2 William Schaeffer, Consultant to Graphics Arts Technical Foundation (GATF), Chairman of the Technical Committee

2.5.2.1 Presentation. Mr. Schaeffer read from a prepared speech that is enclosed.

2.5.3 C. Wm. Schneidereith, Jr., President, Schneidereith & Sons, Inc.; Sheet-fed Industry Segment

2.5.3.1 Presentation. Schneidereith & Sons, Inc. is a commercial printing facility that operates 20 printing units in its sheet-fed, offset lithographic facility. Mr. Schneidereith read from a prepared speech that is enclosed.

2.5.4 Questions and Comments

Question: An alternative concentration requirement may work with incinerators, but would it work with condenser filters? Couldn't the air flow from the dryers be increased to dilute the exhaust and, hence, lower the concentration of VOC's measures, without any real decrease in emissions?

Response: There is a high concentration of VOC's in the dryer. Increasing the air flow is not a good idea, since the air leaving should be at the saturation level or dew point. This option will be researched further.

Question: Were there any numbers to support the claim that as VOC concentration decreases, solid waste increases?

Response: Waste is generated during changeover and runs. There are no numbers at this time concerning the trade-off between VOC's and solid waste. Data is available on waste incurred during various run parameters. Less effective cleaners increase waste and decrease safety.

Question: During the three presentations, each speaker recommended a different limit on the percent alcohol allowed in the fountain solution. What are the reasons for this discrepancy?

Response: The different levels refer to different segments of the industry.

Question: Is taking samples of batches of solution common for small or for large facilities?

Response: Large shops have central fountain solution circulators, smaller shops make 10 gallons at a time. Once the batch is made, it won't change.

Question: Have cleaning solutions of 30 percent VOC have been tried? Have they been examined for quality?

Response: These cleaners have been tried and they do not work. The lower the VOC content, the longer the drying time and the volume necessary for good cleaning is increased. The press is also shut down during this

time, so it would shut down longer when cleaning with these lower VOC cleaners.

Question: Six tons per year of cleaning solution emits 5.13 tons of VOC, corresponding to approximately 84 percent VOC. Is the residual VOC-free? If so, what happens to the remaining 16 percent? Are all the volatile materials emitted?

Response: Some of the remaining cleaning solution leaves the shop in the cleaning rags, and the rest goes into the waste solution.

Question: The model plants showed that the fountain solution for non-heatset web facilities emits the largest amount of VOC's; another speaker indicated that this was too large. Is this true?

Response: The emissions were indeed too high.

Question: Do inks volatilize?

Response: The inks do not volatilize during the normal process until, in the case of heatset inks, they reach the dryer, where 80 percent is volatilized in the dryer.

Question: Have you had any experience with the magnet as a form of water conditioning?

Response: GATF submitted surface tension data comparing water with and without magnets. No difference was noted in the lab studies.

napim NATIONAL ASSOCIATION OF PRINTING INK MANUFACTURERS, INC.
47 Halstead Avenue, Harrison, New York 10528 / Phone: 914-835-5650
Fax: 914-835-5988

JAMES H. SUTPHIN, Executive Director

November 11, 1991

Mr. Bruce C. Jordan
Chair, National Air Pollution Control Techniques Advisory Committee
Director, Emissions Standards Division (MD-13) Office of Air Quality Planning and Standards
U.S. Environmental Protection Agency
Research Triangle Park, NC 27711

Dear Mr. Jordan,

The purpose of this letter is to present comments on the draft CTG for offset lithographic printing prepared for EPA by the Radian Corp. These comments are presented by the National Association of Printing Ink Manufacturers, Inc. (NAPIM) on behalf of the printing ink industry.

NAPIM

NAPIM is a national trade association representing small, medium and large printing ink manufacturers in the U.S. Its eighty members account for nearly ninety percent of the total U.S. sales of printing ink. The printing ink industry is composed of 224 companies operating a total of 504 manufacturing facilities according to the U.S. Census of Manufactures for the year 1987. Total shipments of printing ink in the U.S. were over $2.7 billion in 1990.

NAPIM has been vitally concerned with the need to clarify the definition of VOC which currently varies widely from state to state. We are also vitally concerned that the definition of VOC, and the application of this definition to various types of printing inks, be reasonable and fair to the printing and converting industries in the U.S.

DEFINITION OF VOC

NAPIM is especially concerned with the proposed definition of VOC emission from inks which are applied without the addition of heat (so called no-heat inks). These inks encompass newsink and other no-heat web offset inks; forms inks for commercial business forms, and sheet-fed ink normally used for high quality color printing. While NAPIM acknowledges that the use of the Method 24 oven test condition of 110 degrees C for one hour is appropriate for determining VOC content of heatset inks which are dried through the application of heat, we submit that the use of Method 24 is not appropriate to define the VOC content of lithographic ink which is applied without heat as proposed in the draft CTG.

We have attached a copy of a report prepared by a task force of the National Printing Ink Research Institute (a subsidiary of NAPIM) prepared for Radian Corp. to provide background on measurement of VOC's for no-heat ink. The data and information given in this report show clearly that press temperatures for no-heat inks do not exceed 40 degrees C and that these inks are normally on the press for less than 20 minutes. Therefore, although the draft CTG applies a retention factor of 95 percent for no-heat inks, the conditions specified for Method 24 are fundamentally much too severe for inks which are applied without heat.

In the draft CTG, Radian Corp. has quite properly proposed a retention factor of 95 percent for no-heat ink. In other words, Radian has acknowledged that at least 95 percent of the VOC in the applied ink remain in the ink on the substrate or are absorbed into the substrate. While this may appear to make allowance for the excessively rigorous Method 24 procedure, NAPIM believes that the proposed retention factor is readily subject to change by the states in the preparation of their SIP's whereas the method to determine VOC will be fixed by the CTG.

ALTERNATIVE METHOD FOR DETERMINING VOC

NAPIM would like to call attention to an oven test method proposed by the California Air Resources Board for the Bay Area Air Quality Management District to determine the VOC content of no-heat ink. This is known as Method 30 and will shortly be confirmed as an approved test method by ASTM. Method 30 is conducted at 40 degrees C for one hour and since press temperatures do not exceed 40 degrees C, and since ink residence time on press is less than 20 minutes, Method 30 will predict VOC for no-heat ink with a comfortable margin of safety. We urge the NAPCTA Committee to recommend that EPA adopt Method 30 to measure VOC content of no-heat lithographic inks.

TYPICAL VOC CONTENT

Under section 2.5.1 on page 2-8 an estimated VOC content for non-heatset web inks is given as 30 percent. NAPIM submits that this reflects a "worse case" scenario since in actual practise ink oil content in these types of ink is much lower. Based upon production figures and VOC determinations for the various types of non-heatset web inks (black and colored newsinks, regular offset newsinks, no-rub offset newsinks, forms inks, etc.) the weighted average VOC is estimated at 10 percent. In order to reflect the true average VOC content for these inks, it is urged that the average be changed from 30 percent to 10 percent.

SUMMARY -

We ask that the foregoing comments be considered in the Committee's evaluation of the draft CTG and urge that the suggested change in the method used to determine VOC's in no-heat ink be adopted.

We appreciate this opportunity to comment on the draft CTG and would be pleased to answer any question which the Committee may have.

Sincerely,

James H. Sutphin
Executive Director

/dem
jordan.jhs

cc: NAPCTA Committee
NPIRI VOC Task Force

REPORT TO RADIAN CORPORATION ON VOC'S FOR NON-HEAT INKS

FROM NAPIM/NPIRI TASK FORCE ON VOC'S

MAY 29, 1991

INTRODUCTION

The graphic arts industry and, in particular, the printing ink industry (whom we represent) are concerned about test methods being used to control VOC emissions for lithographic inks that are applied at ambient temperatures without heat. Because of this concern, NAPIM under its research affiliate NPIRI, formed an industry Task Force on VOC so that its dialogue with the EPA and other regulatory bodies would be based upon an industry consensus and not on a company by company basis.

Specifically, the Task Force is concerned about the use of totally unrealistic conditions such as EPA Reference Method 24 (one hour at 110 degrees C) to determine the VOC emission for inks such as newsinks, forms inks, and sheetfed inks that are not heated during application.

Newsinks, forms inks and sheetfed inks contain light distillate oils that have minimum initial boiling points of 480 to 540 degrees F, and which are essentially non-volatile under ambient conditions. Based upon VOC emissions measured at production newspaper presses and temperature measurements made for these same news presses and sheetfed presses, the Task Force submits that an oven test such as Method 30 (one hour at 40 degrees C) more than adequately measures the emissions that may be expected from these inks.

PRESS TEMPERATURES

Newspaper Presses - The American Newspaper Publishers Associations (ANPA) Reston, VA measured temperatures of newspaper presses at four operating newspapers in the greater Washington D.C. area (see Table I). There was virtually no difference in temperatures taken in the summer and winter time at the same presses. Maximum temperatures varied between 30 and 43 degrees C for continuous operation. The maximum temperature of 43 degrees C was achieved for a Mark II Letterpress which is not used for lithographic ink. The average maximum for all presses was 36 degrees C. It seems clear that an oven emissions test of 40 degrees C for one hour more than adequately covers emissions from newspaper presses since ink residence time on the press roller train is estimated as less than 20 minutes.

Sheetfed Presses - The NAPIM Task Force determined the temperatures of five production sheetfed presses covering rates of 4,000 to 9,000 Impressions Per Hour (IPH). Data are shown in Table II. Maximum temperatures of 100 degrees F or 38 degrees C occurred at the form roller and the delivery location. In one instance, a temperature of 110 degrees F (43 degrees C) was recorded for a press having an Infra-Red heater at the delivery point. As is the case for newspaper presses, an oven emissions test conducted at 40 degrees C for one hour will measure sheetfed press emissions more than adequately. Ink residence time in a sheetfed press is also estimated at less than 20 minutes.

TGA TESTS

In an effort to obtain more precise and more meaningful VOC data, the NPIRI Task Force contracted with the John Brown Laboratories, Stirling, N.J., to conduct Thermogravimetric Analyzer (TGA) tests for magenta quick-set sheetfed ink, and a black no-rub news (black) ink. These inks were selected because they contain the highest concentrations of light distillate oils of all non-heat lithographic inks.

The tests were conducted with thin films of ink on aluminum substrates. Tests using paper as a substrate showed interference from water vapor which could not be accurately accounted for. However, an impervious substrate such as aluminum can be expected to give higher results because of the lack of absorption forces that can be expected to be present with paper.

TGA data for the sheetfed ink are shown in Figures 1, 2, and 3 attached. The three curves represent heating rates of 0.25, 1.0 and 5.0 degrees C per minute respectively. Note in each case that there is no weight loss until a temperature of about 50 degrees C is reached, a temperature which exceeds maximum temperatures measured for a sheetfed press.

TGA data for the no rub newsink are shown in Figure 4. VOC weight loss at 41 degrees C (which exceeds the maximum average press temperature by 5 degrees C) is only 0.5%.

TGA/Oven Data A comparison of TGA and oven test data are shown below:

		VOC, % Loss	
Ink	TGA at 40 Degrees C	Method 30	Method 24
Sheetfed	0	1.8	14.8
No-Rub News	0.5	1.7	24.3

The above results show good agreement between TGA results, a precise measuring instrument, and Method 30 oven data. Method 24 data are considerably higher because of its unrealistically higher temperature (110 degrees C).

EMISSION TESTS

In addition to determining press temperatures, the ANPA also measured VOC emissions around these same four newspaper presses during actual production runs. Data are shown in Table III. The maximum concentration determined was 68.3 mg/M^3. Inspection of the GC trace revealed a high concentration of C_9 and C_{11} hydrocarbons which undoubtedly came from wash solvent used on the press. When inks obtained from the various press runs were analyzed using an OHSA approved device to collect VOC's, the high proportion of C_9 and C_{11} compounds were no longer observed.

To study emissions under more carefully controlled conditions, ANPA conducted tests at its press facilities using inks supplied by NPIRI Task Force members having three different VOC contents. Emissions data are shown in Table IV. Emissions during the controlled runs were about one-tenth of those measured during production runs. During the controlled runs a concerted effort was made to minimize the effect of wash solvents, which contributed to the lower emissions observed. Since emission were all low, it was difficult to find significant differences among the various inks. The low rub and no rub inks, which would be expected to have higher emissions, did have slightly higher emissions as a class, than the regular black ink. However, all inks were very low in emissions generated.

/dem
radian.jtd

TABLE I

NEWPAPER PRESS OPERATING TEMPERATURES (°C)

		Summer						Winter					
		Form Roller			Blanket Cylinder			Form Roller			Blanket Cylinde		
Circulation	Press Type	Min	Max	High	Min	Max	High	Min	Max	High	Min	Max	High
37,000	Urbanite	24	31	36	n/a	n/a	n/a	25	30	38	n/a	n/a	n/a
375,000	Metro	28	34	39	37	36	42	28	34	42	29	37	43
717,000	TKS	28	32	38	29	36	40	25	36	36	28	40	40
717,000	Mark II*	32	43	43	n/a	n/a	n/a	33	38	44	n/a	n/a	n/a

Min = Minimum Observed Running Temperature
Max = Maximum Observed Running Temperatuare
High = Highest Temperature Observed After Press Was Stopped
* Letterpress

July, 1989

TABLE II

SHEETFED PRESS TEMPERATURES

PRESS	MIEHLE, 4C 46"	MIEHLE, 4C 34"	MIEHLE, 4C 41"	HARRIS, 6C 25"	KOMORI, 6C 40"
SPEED, IPH	4400	7800	5300	4000	9000
ROOM TEMPERATURE, °F	78 (26° C)	90	88	70	70
INK FOUNTAIN, °F	88 (31° C)	90	90	80	100
WATER FOUNTAIN, °F	60	50	50	55	---
INK TRAIN ROLLERS, °F	90 (32° C)	90	90	90	98
FORM ROLLER, °F	100 (38° C)	90	100	80	98
PRINTING PLATE, °F	88	88	90	80	85
DELIVERY	90	100	90	75	110
IR UNIT	NO	YES	YES	NO	YES

RAYTEK RAYNGER IR PISTOL THERMOMETER, Model #R-380 — used to obtain above data.

TABLE III

VOLATILE EMISSIONS FOR FOUR NEWSPAPERS DURING PRODUCTION OPERATIONS

Circulation	Press Type	Emission, mg/M3[1]
37,000	Goss Urbanite	52.6
37,000		43.0
375,000	Goss Metro	68.3
717,000		42.8
717,000		40.5
717,000	TKS	19.8
717,000	Goss, Mark II*	25.8

*Letterpress

(1) Primarily C_9 - C_{11} hydrocarbons

TABLE IV

VOLATILE EMISSIONS DURING CONTROLLED PRODUCTION RUN[1] (mg/M^3)

Sample Location	Ink Type: Regular Black	Low Rub Black	No Rub Black
Right Ink Form Roller	3.1	5.0	2.6
Left Ink Form Roller	3.7	5.2	3.2
Pipe Roller	0.6	5.7	1.1

(1) Limited wash solvent

TABLE V

VAPOR PRESSURE, mm Hg

Temp. F (C)	Rule 66 Min. Sp.	L.D.O. 540 IBP
68 (20)	5.6	0.01
100 (38)	12.5	0.03
150 (66)	37.0	0.18
250 (121)	200	3.0
350 (177)	740	26.0
Distillation Range F		
IBP	320	538
50%	350	554
FBP	380	599

.gure 1

TGA Test Quick Set Sheet Fed Ink

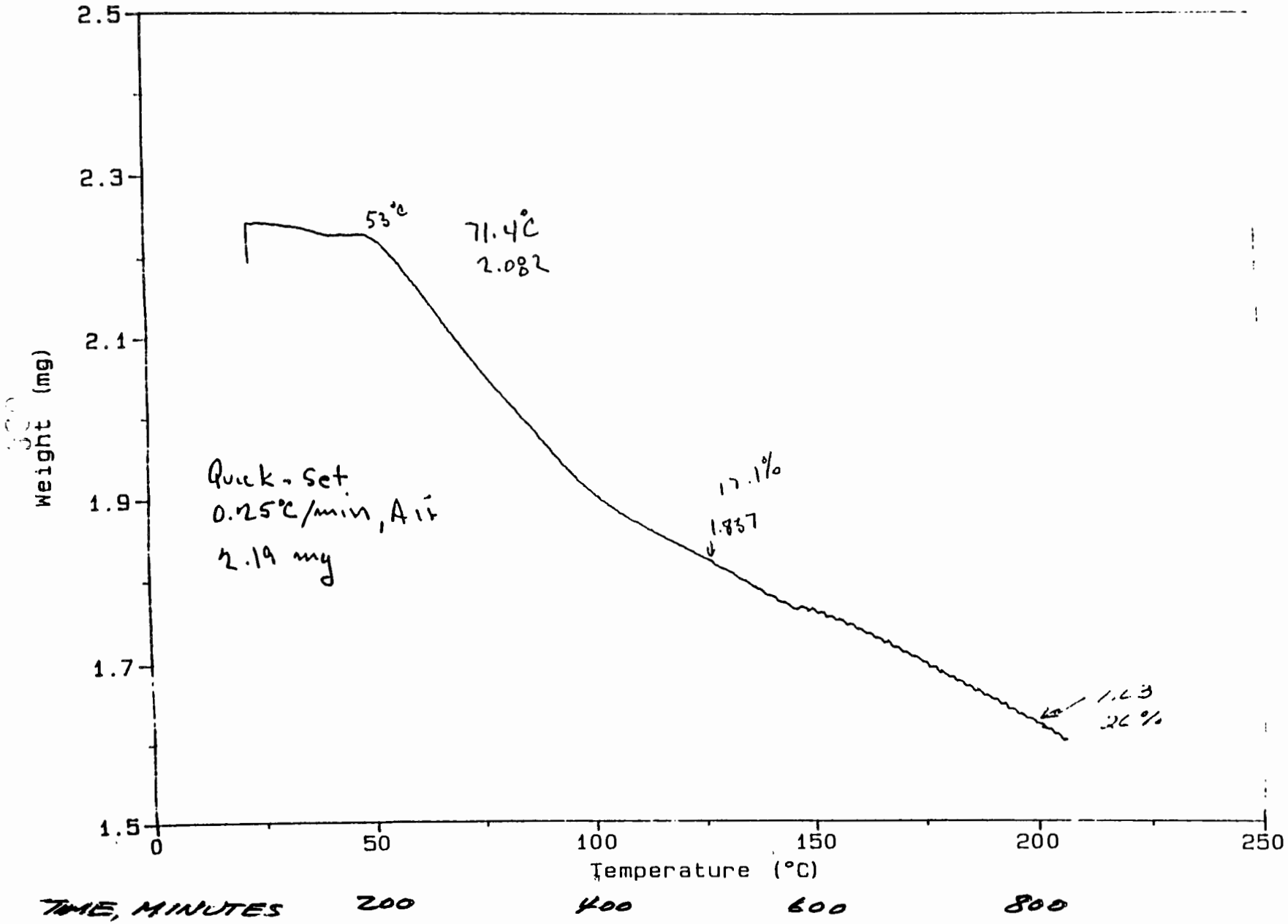

Figure 2

TGA Test Quick Set Sheet Fed Ink

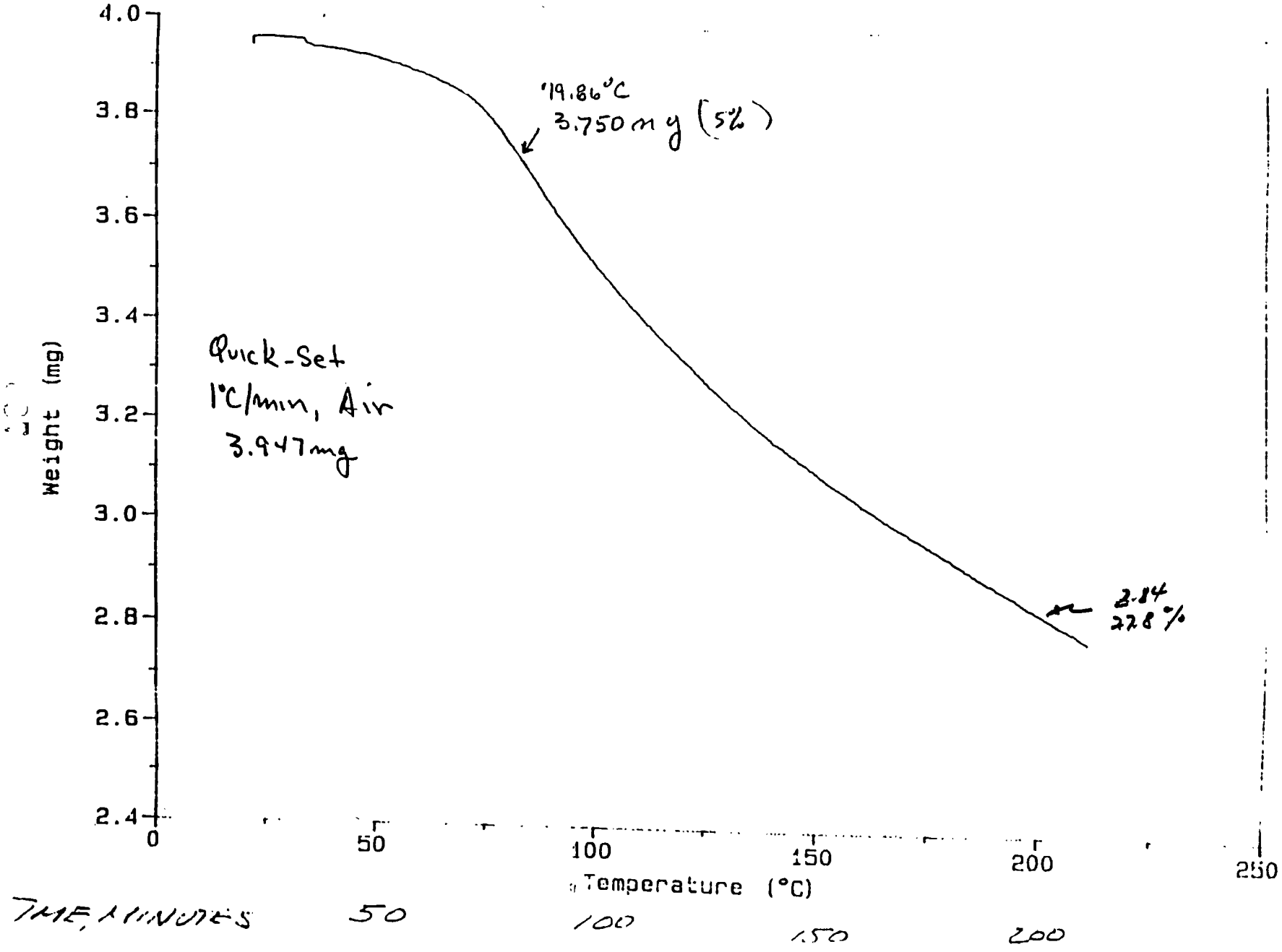

Figure 3

TGA Test Quick Set Sheet Fed Ink

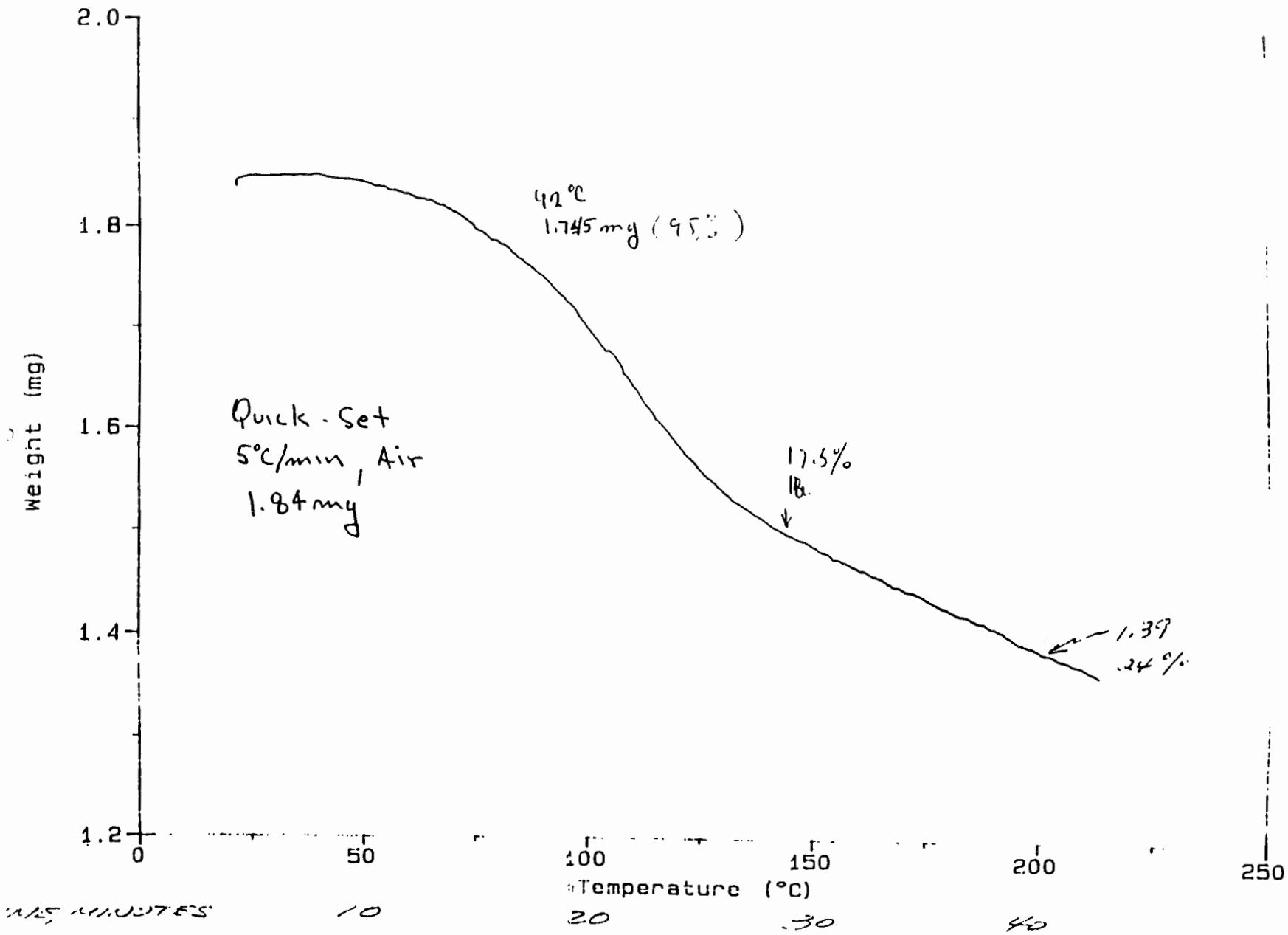

Figure 4

TGA Test No Rub News Ink

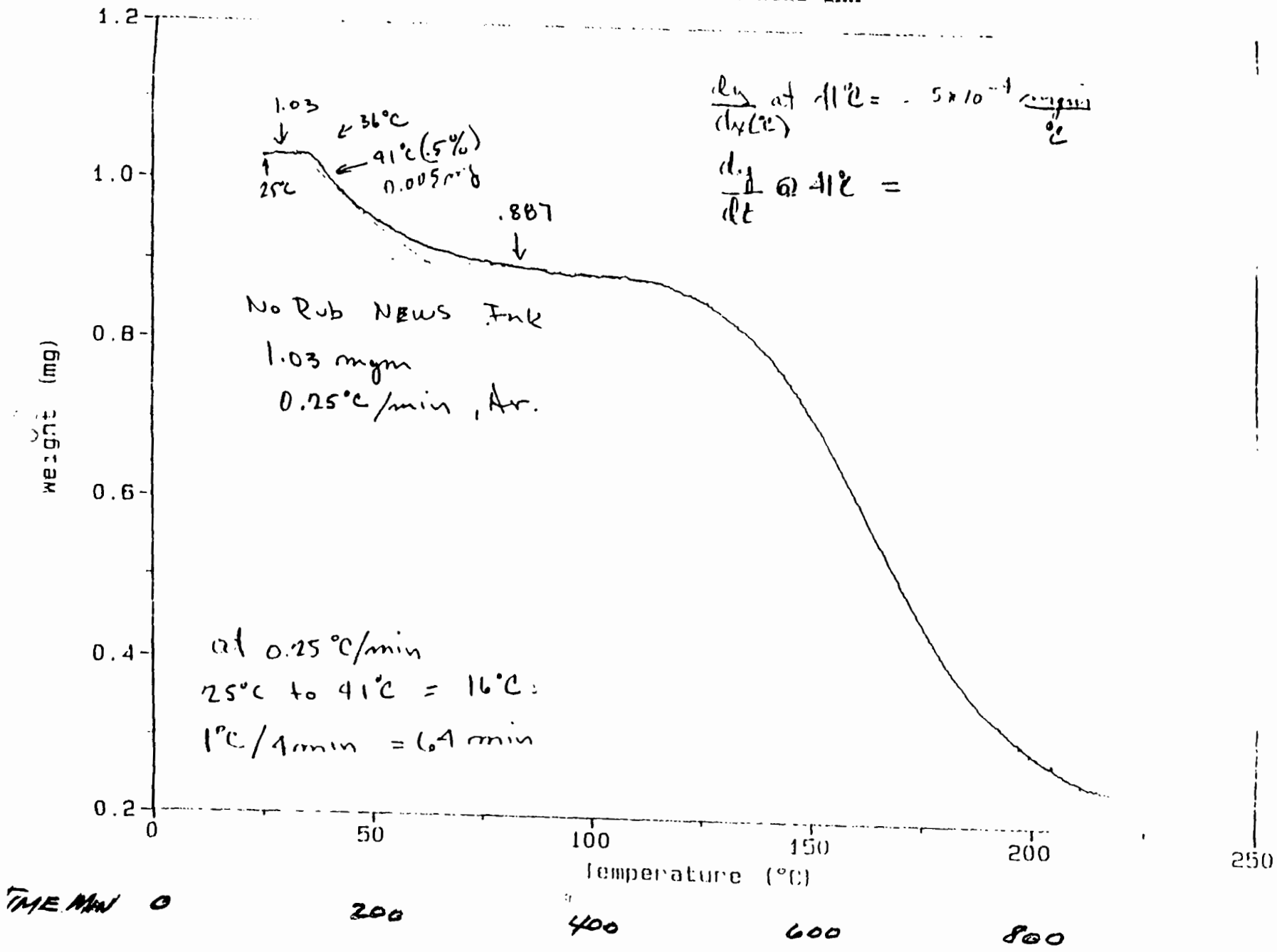

WOOD FURNITURE COATING CTG
STATUS REPORT TO THE COMMITTEE
ON REGULATORY DEVELOPMENT

Seven presentations were made to the Committee concerning the wood furniture coating CTG: one by EPA, four by coating and equipment manufacturers, and two by industry representatives. The key points of each presentation and the discussions that followed are summarized below, accompanied by the handouts prepared by the presenters.

1. EPA PRESENTATION

The EPA presentation was made by:

Ms. Mary-Jo Caldwell
Midwest Research Institute

Ms. Caldwell summarized the status of the wood furniture coating CTG project. A copy of the presentation is attached.

A total of eight SIC codes, covering five industry segments, were considered in the analysis. The five industry segments considered included residential wood furniture manufacturers, cabinet manufacturers, office furniture manufacturers, institutional furniture manufacturers, and store fixture manufacturers. These five industry segments are referred to as "the wood furniture industry".

Based on Census of Manufacturers' data, approximately 11,000 facilities fall into the five industry segments just mentioned. The majority of the industry is made up of residential furniture and cabinet manufacturers, each of which constitute about 35 percent of the industry. More than 90 percent of the 11,000 facilities are considered small, that is, have less than 100 employees.

It is interesting to note, however, that although large facilities, (i.e., those with more than 250 employees), constitute only three percent of the total number of facilities, they contribute about one-third of the total VOC emissions. The wood furniture industry VOC emissions are distributed approximately equally among the three sizes of facilities. The wood furniture industry is one of the largest uncontrolled stationary VOC sources.

Residential furniture manufacturers generally assemble their pieces and then finish them.

The remainder of the industry also does some prefinishing of unassembled pieces. Coatings are usually spray applied. The residential furniture manufacturing industry generally uses manual spraying, whereas the rest of the industry uses both manual and automatic spraying. Flatline coating methods such as curtain coating and rollcoating are not presently used extensively by this industry.

The finishing process may be a single or multi-step operation. The coating may be manually or automatically spray applied in the spray booth. The piece then leaves the booth, and may be wiped before entering the flash area, where the faster solvents are allowed to evaporate. The piece may then enter an oven, and after cooling, may be sanded, after which subsequent coatings may be applied.

The coatings presently used by this industry are primarily solventborne coatings. Residential furniture manufacturers generally use nitrocellulose lacquers, which cure by solvent evaporation. The remainder of the industry uses urea-formaldehyde and melamine-formaldehyde acid-catalyzed coatings, as well as nitrocellulose lacquers.

Based on information obtained from wood furniture manufacturers, EPA estimated that about 94 percent of the total VOC emissions result from finishing operations, with the remaining 6 percent being attributable to cleanup operations. Volatile organic compound emissions in the finishing operation occur as a result of solvent evaporation in the spray booths, flash areas, and ovens. Cleanup VOC emissions result primarily from application equipment cleanup, which usually occurs in the spray booth. Additional cleanup VOC emissions result from repair operations, which also usually occur in the spray booth, and miscellaneous cleanup operations, which occur throughout the finishing area.

In order to evaluate potential control strategies, EPA had to develop model plants to represent the wood furniture industry as a whole. The industry was broken down into two main groups: residential furniture manufacturers and other. Included in the "other" category are cabinet manufacturers, office and institutional furniture manufacturers, and store fixture manufacturers. This category is referred to as "office/cabinet", though institutional furniture and store fixture manufacturers are also included in this category.

The residential furniture manufacturing segment was further broken down into short and long finishing sequence, and then by size. The majority of the office/cabinet segment uses the same finishing sequence, but this segment was broken down by manual and automatic spraying, (since both application methods are used by this segment of the industry), and then by size. Due to the capital investment required for an automatic spray application system, it was assumed that small facilities would not use automatic spraying.

For purposes of the analysis, the size of the model plants was based on total annual VOC emissions. Total VOC emissions of 50 tons per year (ton/yr) corresponds to the small model plant, 225 ton/yr corresponds to the medium model plant, and 500 ton/yr corresponds to the large model plant.

In order to evaluate lower-VOC coating alternatives, finishing sequences had to be

developed for each of the model plants just discussed. The finishing sequences described during the presentation are intended to represent typical finishing sequences. Actual finishing sequences may, and probably will, differ from those shown.

The office/cabinet industry uses a finishing sequence that consists basically of application of stain, sealer, and topcoat. Residential furniture manufacturers using a short finishing sequence use essentially the same sequence, except they also apply washcoat after stain, before sealer. Residential furniture manufacturers using a long finishing sequence use the same coatings as manufacturers using a short sequence, but the coatings are applied more frequently, and additional coatings, including filler, wiping stain, and highlight, may also be used.

The relative VOC emissions from each of the finishing steps was presented. Topcoat application contributes from 35 to 40 percent of the total finishing VOC emissions. Stain and sealer both constitute about 25 to 30 percent of the total finishing VOC emissions.

A variety of factors were considered in evaluating control methods, including: the control techniques available, the types of coatings and finishing sequence used, total VOC emissions and the concentration of VOC's in the exhaust stream, the number and types of VOC's present in the exhaust, and the total exhaust flowrate to be controlled.

Based on the evaluation of the applicability of various control methods, two primary control alternatives were considered for the finishing process. The control alternatives considered included lower-VOC coatings, add-on controls, and a combination of the two methods. Though these control methods have limited use in this industry, they are not presently widely used in the wood furniture coating industry.

The lower-VOC coatings evaluated include waterborne, polyester, and polyurethane coatings. The add-on controls evaluated include recuperative thermal incineration, regenerative thermal incineration, catalytic incineration, and combined adsorption/thermal incineration. Because the capital and operating costs of add-on controls are a function of the flowrate controlled, add-on control vendors indicated that exhaust flow reduction is an essential consideration when evaluating add-on controls. Therefore, two exhaust flow reduction methods were evaluated. These include spray booth recirculation, which involves recirculating a portion of the spray booth exhaust back into the spray booth, and the air curtain system. The air curtain system uses an air curtain to separate the worker from the VOC emissions. The worker stands outside the booth and reaches through the air curtain to spray apply the coating to the piece. Since the worker is not inside the booth, VOC levels do not have to be maintained below the permissible exposure limit, and therefore, high exhaust flows are not required and thus, the spray booth exhaust is significantly less than that of a comparable manual spray booth.

Three primary control alternatives were considered for cleanup operations, including work practice modifications, reformulation of cleanup materials, and the use of add-on controls. Work practice modifications may include the use of enclosed spray gun cleaners and closed containers for the storage of saturated rags. Cleanup material reformulation may include reformulating with lower-volatility solvents, or may involve the use of aqueous-based cleaners. The same add-on controls just described for finishing operations may also be used to control

VOC emissions resulting from cleanup operations.

The control alternatives were evaluated for each model plant, then permutations of different controls being applied to different model plants were developed to form RACT options. Under a single RACT option, the same controls may not necessarily be applied to all model plants. Therefore, the RACT option descriptors do not necessarily indicate the control strategy being applied to all model plants.

A total of nine RACT options were developed. Options 1 through 4 involve the use of lower-VOC coatings; RACT Options 6 through 9 involve the use of add-on controls; and RACT Option 5 involves the use of lower-VOC coatings in conjunction with add-on controls.

RACT Option 1 is described as full waterborne. Under this RACT option, office/cabinet manufacturers and residential furniture manufacturers using a short finishing sequence use full waterborne coating systems which involve waterborne coatings for each of the coating application steps. The majority of the coating suppliers and wood furniture manufacturers contacted indicated that full waterborne coating systems are not presently suitable for residential furniture manufacturers using a long finishing sequence. Therefore, under RACT option 1, residential furniture manufacturers using a long finishing sequence were assumed to use hybrid waterborne coating systems.

RACT Option 2 is described as hybrid waterborne. Under this RACT option, all plants use a hybrid waterborne coating system consisting of waterborne sealer, topcoat, and highlight (as applicable), with conventional solventborne coatings for the remaining coating steps.

RACT Option 3 is described as polyester/polyurethane. Based on conversations with coating suppliers and wood furniture manufacturers, it was assumed that a dust-free environment is required when applying polyester/polyurethane coatings, due to the difficulty in repairing these coatings. Because of the capital investment required for a dust-free environment, it was assumed that small facilities (that is, those with less than 100 employees) would not apply polyester/polyurethane coatings. Therefore, under RACT option 3, it was assumed that small facilities would use hybrid waterborne coating systems, and all medium and large facilities use polyester/polyurethane sealer, topcoat, and filler (as applicable) in conjunction with conventional solventborne coatings for the remaining coating steps.

RACT Option 4 is described as polyester/polyurethane with waterborne coatings. RACT option 4 is essentially the same as RACT option 3 except that office/cabinet manufacturers and residential furniture manufacturers using a short finishing sequence also use waterborne stain and washcoat, and residential furniture manufacturers using a long finishing sequence use waterborne highlight.

RACT Option 5 is described as hybrid waterborne in conjunction with add-on controls being used to control VOC emissions from selected coating steps. Under this RACT option, all facilities use hybrid waterborne coating systems. Due to the capital investment required for add-on controls, it was assumed that add-on controls are not used by facilities with less than 50 employees. Thus, under RACT Option 5, at all facilities with more than 50 employees, it was

assumed that in addition to using hybrid waterborne coating systems, add-on controls are used to control VOC emissions from stain and washcoat operations.

RACT Options 6 through 9 are different combinations of the four add-on controls previously discussed being used to control VOC emissions from all coating steps. Again, because of the capital investment required, it was assumed that facilities with less than 50 employees do not use add-on controls. Because exhaust flow reduction can significantly affect the capital and operating costs associated with add-on controls, each of the four add-on RACT options considered the use of add-on controls with and without spray booth recirculation and the air curtain system.

The emission reduction and cost associated with applying each of the nine RACT options previously described to all wood furniture facilities located in ozone nonattainment areas were evaluated. The nationwide emission reduction; the nationwide control cost; and the associated cost effectiveness, that is, the dollars per megagram of VOC emissions reduced, were presented. For example, RACT Option 1 is described as full waterborne. If this RACT option is applied to all wood furniture facilities located in ozone nonattainment areas, nationwide VOC emissions would decrease by almost 95,000 megagrams per year, which represents a 72 percent reduction over uncontrolled nationwide emissions. The associated annualized cost to industry would be about $229,000,000, with a corresponding cost effectiveness of about $2,400 per megagram of VOC emissions reduced.

EPA PRESENTATION DISCUSSION

Following the EPA presentation, Mr. Brian Taranto of the NAPCTAC asked if the impact in the EPA presentation represented just nonattainment areas. Ms. Mary-Jo Caldwell responded that this was the case. Mr. Taranto then inquired about what percentage of the emissions from the wood furniture coating industry are in nonattainment areas. The project staff were unable to provide that information and promised to provide it to Mr. Taranto at a later time. (Mr. Taranto was later told that based on EPA's estimate of nationwide VOC emissions for the wood furniture industry, approximately one-third of the total wood furniture coating VOC emissions occur in non-attainment areas).

Ms. Vivian McIntire noted that "small" appeared to be defined several different ways throughout the presentation, as 50 tons/year of VOC, 50 employees, and less than 100 employees. Ms. Caldwell explained that the use of less than 100 employees was the Census of Manufacturers definition. Because this encompasses most of the industry, the EPA analysis had to further subcategorize the plants to conduct a meaningful analysis. The subcategories were 0-35, 36-50, and 51-100 employees.

Ms. Deborah Sheiman asked for the basis of the decision that some control alternatives are too expensive for plants employing 50 people or less. Ms. Karen Catlett of EPA stated that the cost effectiveness values (dollars per ton of VOC emissions reduced) were much higher for facilities with less than 50 employees. For plants with at least 50 employees, the cost effectiveness values range from $500 to 8,000/ton, while for plants with less than 50 employees the cost effectiveness values ranged from $6,000 to 9,600/ton. Mr. Jordan elaborated that it was

staff judgment that the costs are too high. Ms. Sheiman then suggested that the line distinguishing between cost effective and ineffective control may have been drawn in the wrong place, that some of the plants with less than 50 employees may be able to afford add-on controls. Ms. Catlett responded that EPA will look into this issue further.

Mr. John Pinkerton asked if this industry is largely uncontrolled, which Ms. Catlett confirmed. He then inquired about which MACT list the wood furniture coating industry is on and what the "best of the best" control is likely to be. Ms. Susan Wyatt replied that it is on the 4-year list. Ms. Catlett further responded that there are very few controls being used by this industry and that the MACT level of control has not been determined yet. Mr. Pinkerton concluded with the recommendation that the CTG and NESHAP efforts be closely coordinated, so that the industry is not affected twice by different levels of control. Ms. Wyatt assured Mr. Pinkerton that EPA is aware of this possibility, which is the reason the wood furniture coating industry is on the 4-year list. Ms. Wyatt explained that in this way, the CTG and NESHAP can be considered together, and industry will have knowledge of both sets of requirements before instituting a VOC control strategy.

Mr. Donald Arkell noted that at this time, the MACT floor would appear to be no control, because most of the industry is uncontrolled. He asked if the implementation of the CTG would have the effect of raising the MACT floor for the NESHAP. Ms. Wyatt stated that the CTG and the NESHAP are on the same schedule, so the CTG will not be imposed first, and thus will not represent baseline for MACT. Mr. Arkell further inquired how MACT would be determined, if the floor is uncontrolled. Ms. Wyatt explained that EPA can evaluate control options more stringent than the MACT floor. Mr. Jordan explained that the MACT floor for an uncontrolled industry is equal to the minimum control allowed by the Clean Air Act. The EPA is required to set MACT as the maximum achievable control level. Mr. Berry of EPA indicated that since the industry is presently uncontrolled, MACT can be set at any level after looking at the impacts of various options.

Mr. Taranto asked if all of the RACT options are equally technically feasible. Ms. Catlett said that EPA believes they are all technically feasible, and that this was one of the reasons for analyzing the costs for all of the RACT options. Mr. Jordan then noted that technical feasibility means that it can be accomplished; however, it does not necessarily mean that performance won't be affected.

Ms. McIntire then inquired if waterborne coatings provide acceptable quality finishes. Mr. Berry stated that the wood furniture coating industry has traditionally used nitrocellulose coatings because the finishes are ideal for the industry because they are easy to repair and have a high gloss. According to Mr. Berry, under the current system, consumers do not have a voice in the marketing decisions. Mr. Berry said that it is uncertain whether consumers can distinguish between the gloss levels associated with different finishes, and they would likely prefer the durability of lower-VOC coatings. Mr. Berry said that there is a tradeoff between the workability of the coatings in the plant and the long term performance of the coatings in the home.

Mr. William O'Sullivan noted that many state and local agencies define 25 tons/year as

a "major" source and recommended that EPA conduct an analysis on this basis as well as the 50 tons/year analysis already performed. Mr. O'Sullivan then suggested performing an analysis of the cost for add-on controls being used to control only the coating steps that emit the majority of the VOC (topcoat, sealer, stain), rather than for all coatings; this might help to improve the cost effectiveness values. Ms. Caldwell of MRI noted that, in the EPA analysis, the 50-employee category was equivalent to about 35 tons/year, close to the value that Mr. O'Sullivan suggested. Ms. Sheiman interjected that it might be more reasonable to define cutoffs on the basis of emissions rather than employees. Ms. Caldwell went on to explain that, for nationwide impacts, it was necessary to use number of employees to classify the plants because that is how the Census of Manufacturers information is organized.

Mr. William Dennison emphasized the need for EPA to analyze cleaning emissions (both spray gun cleaning and housekeeping), which are potentially a large source of VOC emissions. Mr. Dennison indicated that in his experience in California, spray gun cleaning was a large area of contention. The EPA staff responded that cleanup emissions will be addressed.

Mr. Patrick Atkins wondered if EPA had investigated technologies used overseas. Ms. Caldwell replied that they had looked at European technologies such as polyester/polyurethane coatings which are used more extensively overseas. However, furniture is manufactured significantly differently in Europe, with the pieces being flatter and more uniform, which lends the process to some alternative controls.

Ms. Sheiman inquired about public health issues related to the use of polyester/polyurethane coatings. Mr. Jordan said that he believed EPA had looked into it and that there were no risks. Mr. Jordan stated that he would try to provide details at a later time.

This concluded the questions from the NAPCTAC members. Questions were asked by a member of the audience. Mr. Gerry Currier of Reliance asked if air recirculation and air curtains are commercially available and, if so, where they can be obtained. Ms. Catlett responded that air recirculation is used in other spray coating industries and to some extent in furniture coating. Air curtain spray booths are under development and are currently being tested on a pilot line. Ms. Catlett further explained that air curtains have been successfully used commercially on other types of equipment, such as ovens, to contain VOC emissions.

Mr. Currier asked for clarification of Chapter 5 of the CTG document, which he interpreted as utilizing a permanent a total enclosure incorporating the entire finishing room, not the individual emission sources. Ms. Catlett replied that he was correct. The questioner then asked if any such enclosures are in use in the wood furniture coating industry. Ms. Catlett responded that the industry is largely uncontrolled and, therefore, there is no reason for facilities to have total enclosures in place since they would merely exhaust to the atmosphere.

2. UNICARB^R SYSTEM PRESENTATION

The UNICARB^R presentation was made by:

Thayer West
Market Manager - UNICARB^R System
Union Carbide

Mr. Thayer presented a brief description of how the UNICARB^R System works, its applications, and the VOC emissions reductions achieved (see attached handouts). The system substitutes CO_2 for conventional solvents in coatings. This substitution lowers the total VOC content of the coatings. The CO_2 primarily replaces the "fast" solvents and often replaces HAP solvents. This system offers the additional benefit of often allowing the use of the same resins currently in use. The coatings used by this system have a high solids content and can be applied manually or automatically using electrostatic or nonelectrostatic and airless or air-assisted airless methods.

The UNICARB^R System is currently available for nitrocellulose topcoats and sealers, pigmented lacquers and enamels, and single component acrylics, polyesters, and urethanes. A two-component system is under development and may be available in 1992.

The VOC reduction achieved by this system varies with the type of coating and final product and ranges from about 40 to 75 percent. When looking only at the HAP solvents used in coatings, reduction of 50 to 85 percent may be achieved.

The UNICARB^R System is operating commercially at Pennsylvania House, applying topcoats to chairs. About a 70 percent reduction in VOC emissions from topcoat application has been achieved, and the plant is achieving more coverage with the same volume of coatings. A demonstration system was used at Lehigh, Marianna that reduced the number of sealer coats from four to two by achieving better film builds. In-plant trials are being conducted at other furniture manufacturers and in other industries. In Japan, the UNICARB^R System is being considered for its performance characteristics, such as fine particle size and good appearance.

According to Union Carbide, this system provides numerous advantages, as outlined in the handouts. It is easy to retrofit because it can be installed at a rate of one line or spray booth at a time. Because the faster solvents are replaced with CO_2, the majority of the VOC emissions occur later in the finishing sequence, in the oven. By moving the solvent emissions from the booth to the oven, the UNICARB^R System makes it easier to control emissions. Finally, Union Carbide believes that this system has a relatively low investment cost. It was not included in EPA's analysis of RACT, and Union Carbide is willing to provide cost information to EPA.

UNICARB^R PRESENTATION DISCUSSION

Mr. William Dennison asked if there are any size limitations to the technology or any practical limitations due to cost. Mr. West stated that it depends on the number of coating steps, but he believes there would be economic paybacks even for the plants emitting less than 50

tons/year. Mr. West indicated that they are working on making the system more affordable, such as leasing arrangements. Mr. Dennison inquired about the training requirements for the equipment, in light of the high employee turnover typical at furniture plants. Mr. West stated that the training required is minor. Mr. Dennison also asked if the gun cleaning requirements for the UNICARB[R] System are the same as for other guns; Mr. West said that they are similar to the cleaning requirements for airless guns.

Mr. Ralph Hise asked a series of questions regarding how the CO_2 and paint are combined and whether the vessel the coating is stored in is pressurized, and questioned the safety of the highly pressurized system. Mr. West explained that the paint is not under pressure until after it enters the spray equipment. The liquid CO_2 (at 1,100 psi and 88°F) is fed from standard gas cylinders into the spray equipment. Simultaneously, the paint is pumped into the UNICARB[R] spray apparatus and mixed with the CO_2 at pressure.

Ms. McIntire inquired whether the UNICARB[R] System could be considered reasonably available at this time, even though it seems there is still quite a bit of trial testing ongoing, and two-component coatings are not expected to be available until 1992. Mr. West stated that it is currently available for nitrocellulose topcoat and sealer and has been used at Pennsylvania House for about one year. Mr. West said that Union Carbide has been working on the UNICARB[R] System for 4 to 5 years.

Mr. Atkins noted that Pennsylvania House apparently achieves an increased transfer efficiency with this equipment and asked if Mr. West could explain why. Mr. West responded that it was unclear why there is increased transfer efficiency, it may be due to more careful handling by the person doing the coating or it may be inherent to the technology.

Mr. Ralph Hise asked if the UNICARB[R] System paint is more viscous than conventional paints when it hits the part. Mr. West replied that it is more viscous.

3. CLASSIC SYSTEMS, INC. PRESENTATION

The presentation on the Classic Systems, Inc., technology was made by:

Mr. David Brookman
Classic Systems, Inc.
Statesville, N.C.

Mr. Brookman provided a description of the Classic Systems CamBooth[R], which is a spray booth using low velocity air curtains to isolate the worker from the spray emissions (see attached handouts). Traditional spray booths have an open front, so that VOC's and overspray are lost. To ensure worker exposure safety, high volumes of air are exhausted from the booth. The volume of makeup air to the booth is usually inadequate, resulting in a negative pressure within the booth. This pressure differential results in (1) dust entering the booth and degrading product quality and (2) a cold and drafty work place. There is also a high cost associated with moving and heating the high volumes of air.

The goal of the CamBooth^R design is to minimize the air volumes being handled, thus decreasing costs. Attached to the CamBooth^R is an enclosed flash tunnel. There are air curtains at the entrance of the spray booth, the exit of the flash tunnel, and the entrance and exit of the oven. These curtains prevent VOC emissions from escaping from these areas during the coating operation. These air curtains use recirculated air. The open side of the CamBooth^R where the workers stand, also has an air curtain of fresh filtered air (no recirculation) delivered at a rate of about 600 feet/minute. The air curtains located in between the worker and the piece are kept at a relatively low speed to reduce worker arm fatigue. It is also possible to add a heating element to the air curtains near the worker in the winter, if desired.

The Cambooth^R design uses a cascading air system, with exhaust from the oven supplying the flash tunnel and tunnel exhaust venting to the CamBooth^R. Within the CamBooth^R, the air is added from the top of the booth at 50 feet/minute and withdrawn from vents at the bottom. Mr. Brookman speculated that this uniform, low-velocity downdraft may help to increase transfer efficiency. The exhaust from the CamBooth^R can then be directed to an add-on control, such as an incinerator. The exhaust from multiple CamBooths^R can be combined and directed to a single add-on control device.

Studies have been performed by Classic Systems demonstrating that overspray deflecting off a piece towards the worker is contained by the curtain. Mr. Brookman's presentation included pictures of studies in which smoke was introduced into the CamBooth^R and the exhaust system removed the smoke before it appeared outside the booth.

Mr. Brookman presented estimated operating costs (electricity, heating, fuel, and incinerator) for a typical spray booth using 120,000 cubic feet per minute (ft^3/min) and a CamBooth^R using 21,000 ft^3/min. The total operating costs were about $992,000 for the typical spray booth and about $145,000 for the CamBooth^R. The largest individual difference was in the fuel cost for the incinerator.

CLASSIC SYSTEMS PRESENTATION DISCUSSION

There were no questions following the Classic Systems presentation.

4. GRACO, INC. PRESENTATION

The Graco presentation on transfer efficiency was made by:

Mr. Steve Kish
Market Development Manager
Graco, Inc.

Mr. Kish presented the results of a study of the transfer efficiencies of different types of spray guns (see attached handout). Most of the presentation is included in the handout and will not be repeated here.

Mr. Kish agrees with EPA that there are many factors influencing the transfer efficiency

of a coating system. The primary factor is operator spray technique (e.g., gun setup, proper gun position, proper spray speed, fan pattern adjustment, cleaning). However, operator technique cannot be controlled. Therefore, Graco focused their study on the transfer efficiency of just the application tool (i.e., the spray gun) rather than the entire system. They tested six spray guns under controlled conditions and achieved transfer efficiencies ranging from 30 to 75 percent. Only the electrostatic methods achieved transfer efficiencies over 50 percent. They feel that the standard target used in this study is typical of what is coated by their customers.

While admittedly looking at only part of a complex system, Mr. Kish believes that studies of relative transfer efficiencies of spray guns can provide valuable information. More efficient application tools will reduce the amount of paint used to finish a part, thus reducing the VOC emissions.

GRACO INC. PRESENTATION DISCUSSION

Mr. Taranto asked if Mr. Kish agreed with EPA's decision not to numerically define and include transfer efficiency in the CTG. Mr. Kish stated that if you are looking at the transfer efficiency of the total system, as EPA does, then he agrees that it cannot be quantified. However, it is possible to look at the transfer efficiency of the application tool (i.e., the gun) alone, as his presentation demonstrated. Mr. Dennison noted that if you isolate and evaluate each of the parameters, you are not looking at reality, and Mr. Kish agreed with this observation.

5. ENSR PRESENTATION

The industry-sponsored presentation on the technical aspects of the study being conducted by the industry group was made by:

Mr. Robert McInnes
ENSR Consulting and Engineering

Four trade associations for industries affected by the wood furniture coating CTG formed a Joint Industries Steering Committee, which sponsored two studies of the cost and economic impact of possible emission control scenarios. The goal of the Committee and the studies are to assist in developing a CTG that is environmentally protective, technically feasible, economically justifiable, and does not restrict the industry. The study is not final yet, but will be completed shortly. The information in the attached handouts from the presentation will not be reproduced here. Instead, this discussion will present clarifying and additional statements made by Mr. McInnes.

The wood furniture industry is essentially a "fashion" industry, in that it responds to consumer demands. In addition, wood is not a uniform substrate, such as metals. Both of these factors increase the complexity of the manufacturing process and the analysis. A detailed survey of 160 facilities and site visits to 24 facilities were performed, to develop model plants and determine the technical feasibility and economic impact of possible control options.

Technical limitations of many control options that were noted include:

1. Wood is sensitive to heat and water. Therefore, control technologies cannot simply include changes to waterborne coatings and changes in oven temperature.

2. Full waterborne coatings are not in use for the "long-sequence" segment of the industry and are not available for some types of coatings. In addition, there are quality problems.

3. Current coatings and colors have been developed over years of trial and error, developed specifically for each plant and customer by onsite testing. These coatings cannot be changed over night. Customers must be provided consistent quality. There may also be OSHA and insurance questions regarding the use of this technology.

4. Air recirculation is used only in a very small number of plants and is not applicable to all industry segments. There may also be OSHA and insurance questions regarding the use of this technology.

5. Air curtain systems are not commercially available.

6. The UNICARB[R] System is not commercially available for all coatings, has technical problems delivering sufficient coating volumes, and requires longer drying times.

7. Mobile zone spray booths and Terr-Aqua UV/AO oxidation are developing technologies that are not commercially available.

Twelve model plants were developed to characterize the industry. Ten parameters were used to define each model plant (see handouts). The cost effectiveness of sixteen control technologies were evaluated, including add-on controls, different application methods, and reformulation of coatings (see handouts). Mr. McInnes outlined problems with each of these categories of control technologies (see handouts). The cost analysis was performed for different numbers of ovens and booths, which significantly affects the cost effectiveness values. The model plants contained from five to fifteen booths per facility. Capital cost, annual cost, and cost effectiveness were calculated using OAQPS guidelines.

The capital costs (per plant average for the industry as a whole) varied widely for each control category: from $400 to $210,000 for spray techniques; from $98,000 to $1,030,000 for reformulations; and from $163,000 to $1,026,000 per booth for add-on controls (see handouts). The estimated annual operating costs for each control category ranged from: a cost savings of $51,000 to expenditures of $470,000 for spray techniques; a cost savings of $163,000 to expenditures of $1,222,000 for reformulations; and expenditure of from $68,000 to $321,000 per booth for add-on controls (see handouts). The cost savings occurred for only one of the twelve model plants. The average annual operating cost for the remaining eleven model plants was over $200,000.

The VOC emissions reductions achieved for the industry varied widely for each control alternative, from 2 to 33 percent for improved spray techniques, 28 to 80 percent for coating reformulations, and 3 to 86 percent for add-on controls (see handouts). The cost effectiveness values for each control category ranged from: a cost savings of $2,100/ton to expenditures of $9,400/ton for spray techniques; a cost savings of $500/ton to expenditures of $15,800/ton for reformulations; and expenditures of $1,300 to $87,300/ton for add-on controls (see handouts).

Mr. McInnes concluded his presentation with a discussion of several industry concerns other than cost. First, the industry recommends that the units of the standard not be in terms of pounds of VOC per gallon of coating minus water. The trend is towards using water in coatings, and if water is deleted from the calculation, there will still be high VOC levels. Use of this format does not show the actual VOC reductions achieved by using waterborne coatings. Second, because the wood furniture industry is so technically and economically diverse, there should be different standards for different industry segments. Finally, Mr. McInnes made the strong recommendation that, if the CTG includes the use of some of the emerging technologies (e.g., full waterborne coatings), EPA needs to allow sufficient time for research and development of these technologies in the CTG.

6. NERA PRESENTATION

The industry-sponsored presentation on economic impacts of the CTG was made by:

Dr. Mark Berkman
National Economic Research Associates

The second study sponsored by the Joint Industries Steering Committee was an evaluation of the economic impact of possible CTG control options on the wood furniture industry. The Committee decided to conduct a study of the total industry impacts and to assume that the goal of EPA is to reduce VOC emissions in nonattainment areas at the lowest possible industry cost. This summary of the presentation will not include a repetition of the handouts, which are attached. Instead, statements made by Dr. Berkman to clarify and expand on the handouts will be discussed.

The study looked at total annual operating costs, plant closures, and employment losses. These economic factors were studied as a function of increasing percent VOC emissions reduction, from 10 to 80 percent. Over this range of VOC control, total annual cost ranged from $53 to 543 million (see handout for details).

The projected plant closures for this range of VOC closures ranged from 930 to 2,539 (see handouts for details). However, the economic analysis is not complete, and Dr. Berkman stated that the plant closure estimates will likely increase in the final report. The closings will primarily occur among the smaller facilities.

The number of jobs lost over the range of VOC reductions was 5,283 to 86,534 (see handouts for details). The largest number of job losses represents about 30 percent of the total employment in this industry. The largest facilities in the wood furniture industry will probably

not close as a result of a CTG but there would be sizeable employment losses.

Dr. Berkman then presented a discussion of the cost of control to this industry relative to its VOC emissions. First, the wood furniture coatings contribute less than 1 percent of the VOC emissions in the U.S.. Second, the average cost effectiveness values for the wood furniture industry is about $3,000/ton. Dr. Berkman presented the results of a study by the Office of Technology Assessment demonstrating that there are numerous other industries with cost effectiveness values at or below $2,000/ton. This is not to suggest that the wood furniture industry should not be controlled but rather that it is not a major contributor of VOC emissions and should be controlled proportionately to its emissions.

The study determined that there is a wide range of cost effectiveness values for each control option for the different model plants. The lowest cost of attaining a 30 percent VOC reduction ranges from a slight profit to about $15,000/ton for seven of the model plants. For these reasons, Dr. Berkman suggested that EPA consider the cost impacts of the different segments of the industry separately.

The NERA study also analyzed the effect of different VOC control options on profitability for each of the model plants (see handouts for details). The cost of VOC control is difficult to pass along to the customers and, therefore, the CTG would significantly impact profitability. The model plants included as part of their initial analysis happened to all be part of the upper profit quartile. Therefore, to further analyze the impact of decreased profitability, they are adjusting their analysis to include smaller, less profitable model plants.

The study further analyzed the annual failure rate in this industry in the absence of any regulations. For the period 1986 to 1990, the failure rate of the wood furniture industry outstripped the nationwide failure rate for all other industries combined (see handouts for details). In part, this is due to substantial and growing foreign competition, which increased from a value of about $1 billion in 1981 to almost $4 billion in 1990. The impact of the CTG will be to increase the competitive advantage of foreign imports.

The study also evaluated the impact of the capital cost of the different levels of VOC control. If a plant is able to stay in business following the implementation of the CTG, the cost of the control will limit the ability to upgrade, modernize, and expand the facility. This limitation will further decrease the competitiveness of this industry.

Dr. Berkman concluded with two recommendations to EPA in the development of the CTG. First, this industry appears to be a prime candidate for a market-based approach to regulation. Second, EPA must review and regulate the industry in the context of its contribution to total nationwide VOC emissions.

ENSR/NERA PRESENTATION DISCUSSION

Mr. Taranto asked if the projections on plant closures and job losses are for all of the industry or only the facilities in nonattainment areas. Dr. Berkman replied that the study

assumed all plants will be affected by the CTG. They are continuing their analysis and plan to analyze the impacts on only those plants in nonattainment areas. Dr. Berkman hypothesized that although the closures and job losses may be decreased when only facilities in nonattainment areas are considered, the decrease may be offset by (1) increased closures in nonattainment areas because those facilities would be at an economic disadvantage compared to those in attainment areas and (2) the increased stringency of some of the financial tests NERA plans to utilize.

Ms. McIntire asked whether the NERA study had included an analysis of the impact of the application of MACT to plants emitting over 10 tons/year in attainment areas, to determine whether facilities in attainment areas would have a cost advantage. Dr. Berkman replied that this has not been explicitly addressed but that their analysis considers to some extent a combined RACT/MACT.

Ms. McIntire asked why, in the NERA analysis, the use of full waterborne coatings and ultraviolet (UV)-cured coatings does not eliminate VOC emissions. According to Mr. McInnes, these coatings still contain some amount of VOC. In addition, there is no UV-cured stain. Therefore, only about 65 to 70 percent VOC emissions reduction is achieved using these coating technologies.

Mr. Dennison asked why UV air oxidation was considered an emerging technology in the ENSR study when this technology is an accepted technology in the aerospace industry. Mr. McInnes responded that he was unaware of its use in the aerospace industry. Their classification of UV air oxidation as an emerging technology was based on the fact that it has not been demonstrated long term in the wood furniture coating industry; it is currently in use in only one wood furniture facility.

Mr. Dennison asked whether the NERA analysis had considered what would happen regarding plant closures in the absence of any regulation, whether this industry is currently economically viable. According to Dr. Berkman, the NERA analysis addresses this issue in part because it includes analysis of current economic conditions and other factors beside the CTG. Dr. Berkman agreed that the industry has been undergoing contraction and consolidation and that a number of existing companies are operating in a negative financial status. However, the regulations will exacerbate the problems and confirm the closure of currently marginal facilities. The final report will have benchmark closure projections as well as demonstrate the additional effect of the CTG on plant closures.

Mr. Dennison further noted that, while VOC emissions from wood furniture coating may be a small percentage of the nationwide VOC emissions, the more important factor to consider is the industry's percent VOC contribution in only nonattainment areas. Dr. Berkman concurred that if you look only at nonattainment areas, the percent VOC contribution of this industry may increase somewhat. However, Dr. Berkman said that the cost to this industry may not be proportional to the level of VOC emission reduction achieved relative to other industries. He also indicated that the stringency of a standard should be proportional to its contribution and economic impact.

Mr. Pinkerton asked the EPA staff how economic factors will affect the MACT decisions

for the NESHAP. Ms. Wyatt responded that an economic analysis will be performed for control options above the MACT floor and the results will be used in selecting options for MACT.

Ms. McIntire asked if the NERA analysis was new to EPA. Ms. Wyatt stated that EPA knew an analysis was being performed but had not seen any of the results prior to the NAPCTAC presentation.

Mr. O'Sullivan asked what the current dollar value of U.S. sales is for this industry. Dr. Berkman responded that their study does not directly have this information but that there were about $4 million in foreign sales in 1990, which is about 15 percent of total U.S. sales.

Mr. O'Sullivan further inquired whether the NERA analysis assumed control of all of the spray booths at a facility. Mr. O'Sullivan recommended to EPA that they look at this type of incremental analysis to develop cutoffs on what types of control technologies should be required for each type of facility. Dr. Berkman explained that the NERA study looked at varying levels of control at a facility, from 10 percent to over 80 percent. If add-on control was the least cost option for a particular control level, that was the cost used to calculate cost effectiveness. These different levels of control could be achieved by incrementally controlling different numbers of spray booths. Mr. Berkman said that this will be made clear in the final report.

Mr. O'Sullivan stated that, from the NERA study, it looked as if there were some clear decision points for EPA to control at about the 25, 50, and 75 percent control levels. He asked if industry had any recommendations. Dr. Berkman responded that they did not have recommendations at this time. When the report is final, which should be soon, the industry plans to work with EPA to analyze the study results.

Mr. O'Sullivan asked how it can be feasible to get promising control technologies demonstrated in an industry that is essentially uncontrolled. Mr. McGinnis responded that the industry is currently trying to use waterborne coatings on several lines. The industry is always looking for better and less expensive technologies. Mr. O'Sullivan noted that the state implementation plans (SIPs) must have a contingency plan in case the state fails to meet its emission reduction goals within a specified time. If the goals are not met, it triggers the requirement for add-on controls. It may be possible to use the "hammer" provisions to provide incentive to this industry to try new technologies. He asked how long it takes to make a new technology commercially viable. Mr. McInnes estimated that it takes 2 to 4 years to test and implement new approaches.

Mr. O'Sullivan asked what NERA would recommend as a cost effectiveness cutoff. Mr. McInnes declined to make a recommendation. He noted that the model plants reflect a wide range of cost effectiveness values, and that the total amount of VOC emitted from a spray booth is the primary cost factor. Booths are fairly standard in size, and the speed of production is a key factor, influencing how much VOC is emitted, and thus, the associated cost effectiveness of add-on controls. Mr. O'Sullivan asked if the NERA report included the incremental cost for adding add-on controls to a spray booth, to which Mr. McInnes replied in the affirmative.

Mr. O'Sullivan asked if EPA had any policy or thoughts on the issue that had been raised

several times regarding adjusting the VOC limits to subtract out water. Mr. Berry responded that this was a complex issue and that EPA was aware of it. Mr. Berry said that there is some problem with very low solids coatings; however, some parties tend to stretch this anomaly over the full gamut of waterborne coatings, which is not appropriate. Mr. Berry said that EPA will be giving this issue further consideration in the development of the CTG.

Mr. Pinkerton asked if industry has any concerns regarding the two on-going regulatory tracks (i.e., development of RACT and MACT). Mr. McInnes responded that industry definitely would like to see the two developed in parallel, to avoid the problems of multiple and differing standards. Mr. Pinkerton concurred that this would be his very strong recommendation.

Mr. Jordan said that he was intrigued by the market-based controls concept briefly discussed in the industry presentation, and indicated a desire to further discuss this concept in the future. Mr. Jordan asked when the NERA study would be completed. Industry responded that they expect the study to be finished by the end of the year.

7. MOBAY CORPORATION PRESENTATION

The Mobay presentation on polyester and polyurethane coatings (which is attached) was made by:

Mr. John Williams
Director, Technical Marketing
Mobay Corp.

Mobay supplies aliphatic and aromatic polyisocyanate resins for use in polyurethane coatings. These coatings provide greatly improved performance (e.g., alcohol and mar resistance), which will help with foreign competition. The CTG document contains a value of about 3.4 lb VOC/gallon for polyurethane coatings and, while this is technically achievable, it is outside the typical values. There are two-component solventborne polyurethane coatings for clear topcoats that contain 4.6 to 5.5 lb VOC/gallon. This represents about a 23 percent reduction from nitrocellulose coatings. In addition, the high film build results in a reduced number of coating applications. The drawbacks to polyurethane coatings are the need for (1) a dust-free coating environment and (2) worker training in the use of the two-component equipment.

Non-air inhibited unsaturated polyester coatings are high-gloss, high-build systems. Clear topcoats and sealers are commercially available and contain about 1.5 lb VOC/gallon. Use of polyester coatings achieves about 40 to 75 percent VOC reduction for air dry and 88 to 97 percent reduction for ultraviolet (uv)-cure. Overseas furniture manufacturers are using these coatings because of the improved performance. Development is continuing on other coatings.

Work is ongoing to develop a two-component waterborne polyurethane topcoat and sealer containing about 0.9 lb VOC/gallon. It should be commercially available in 1 to 2 years.

Customers have expressed some concern about worker health and safety because of the polyisocyanates in these coatings. Mobay has conducted extensive monitoring in plants using polyisocyanates and has found no problems.

Both the polyurethane and polyester coatings are to some extent limited to certain segments of the wood furniture industry. Mobay supports the use of low-VOC technologies, but only when combined with improved performance because of the need to increase competitiveness of U.S. products.

Mobay supplies raw materials to coating manufacturers, but works closely with the coating suppliers and the coating buyers, such as wood furniture manufacturers, to ensure the end product satisfies all parties. Mobay would like to work with EPA, a coating supplier, and a wood furniture facility to install and use these new technologies on a demonstration basis.

Mr. James Berry, ESD/EPA, concluded this session by noting that the wood furniture industry has used nitrocellulose coatings for a long time. Polyurethane and polyester coatings are relatively new to the wood furniture industry. However, he suggested that industry representatives look closely at this technology. Mr. Berry said that looking at all paint systems being used everywhere on every conceivable end-product, polyester/polyurethane coatings are generally accepted as the premier coatings for durability, color retention, etc., and may be able to achieve large VOC emissions reductions at a reasonable cost. Wood furniture coating is the largest uncontrolled single-industry VOC source remaining, and EPA cannot just ignore these emissions.

MOBAY PRESENTATION DISCUSSION

Mr. Atkins inquired about possible health problems associated with using isocyanates. Mr. Williams responded that coatings with isocyanates can be used safely. He said that all coatings have some type of hazard, and general safe handling procedures are sufficient to protect workers from isocyanates.

Mr. Atkins also asked if there are special costs associated with the use and monitoring of a polyester or polyurethane coating system. Mr. Williams acknowledged that the two-component coating system requires two coating pots and a special spray gun. He noted, however, that the equipment is commonly available and used extensively by the military.

Ms. McIntire asked if the toxicity of the two-component coatings is higher than that of solvents used in conventional coatings. Ms. McIntire said that after the permit program and MACT standards are in place, it will be difficult to switch to more toxic coatings. Mr. Atkins replied that the solvents used in the two-component coatings are similar to those in conventional coatings.

Ms. McIntire noted that RACT should genuinely be reasonably available. There are a number of developing control technologies for the wood furniture coating industry. While it may not be within the realm of the CTG process, the Clean Air Act Amendments clearly contain mechanisms for encouraging switching to new technologies that probably are related to the

economic incentive programs. Incentives that might be offered are extended compliance times, grants, and issuance of general permits during initial startup phase.

Mr. Jordan read one question from the audience, which stated that there is at least one dip tank in use in the industry and asked if EPA would require controls on such an activity. Mr. Berry responded that it would depend in part on the VOC content of the coatings and suggested that the questioner talk to Mr. Berry after the meeting about the specifics of the situation. Mr. Jordan also read a comment from the audience, strongly recommending that any size cutoffs be made in terms of tons/year of VOC, not number of employees, since some companies subcontract coating of parts and only assemble the finished parts.

The session concluded with one question from the audience, stating that the Joint Industries Steering Committee was unaware of the new waterborne polyester coating discussed in the Mobay presentation, or Mobay's offer to work with a plant to develop a system and wondered why EPA had not informed the Committee prior to NAPCTAC. Mr. Berry responded that he had informed Mr. Buck Deal of Bernhardt (a member of the Joint Committee) immediately after hearing the Mobay information. Mr. Deal responded that given the timeframe of this notice (a few weeks before NAPCTAC), he did not feel that the Mobay presentation was appropriate for the NAPCTAC meeting.

CONTROL TECHNIQUES GUIDELINE

CONTROL OF VOC EMISSIONS FROM WOOD FURNITURE COATING OPERATIONS

NAPCTAC PRESENTATION

NOVEMBER 21,1991

038

INTRODUCTION

BACKGROUND

- OVERVIEW OF WOOD FURNITURE INDUSTRY
- EMISSION SOURCES

REGULATORY ANALYSIS

- MODEL PLANTS
- CONTROL ALTERNATIVES
- RACT OPTIONS
- IMPACTS

INDUSTRIES EVALUATED BY THE ANALYSIS

SIC CODE	INDUSTRY
RESIDENTIAL	
2511	WOOD HOUSEHOLD FURNITURE, EXCEPT UPHOLSTERED
2512	WOOD HOUSEHOLD FURNITURE, UPHOLSTERED
2519	HOUSEHOLD FURNITURE, NOT ELSEWHERE CLASSIFIED
CABINETS	
2434	WOOD KITCHEN CABINETS
2517	WOOD TELEVISION, RADIOS, PHONOGRAPH, AND SEWING MACHINE CABINETS
OFFICE	
2521	WOOD OFFICE FURNITURE
INSTITUTIONAL	
2531	PUBLIC BUILDING AND RELATED FURNITURE
FIXTURES	
2541	WOOD OFFICE AND STORE FIXTURES, PARTITIONS, SHELVING, AND LOCKERS

DISTRIBUTION OF FACILITIES
BY INDUSTRY SEGMENT

APPROXIMATELY 11,000 FACILITIES TOTAL

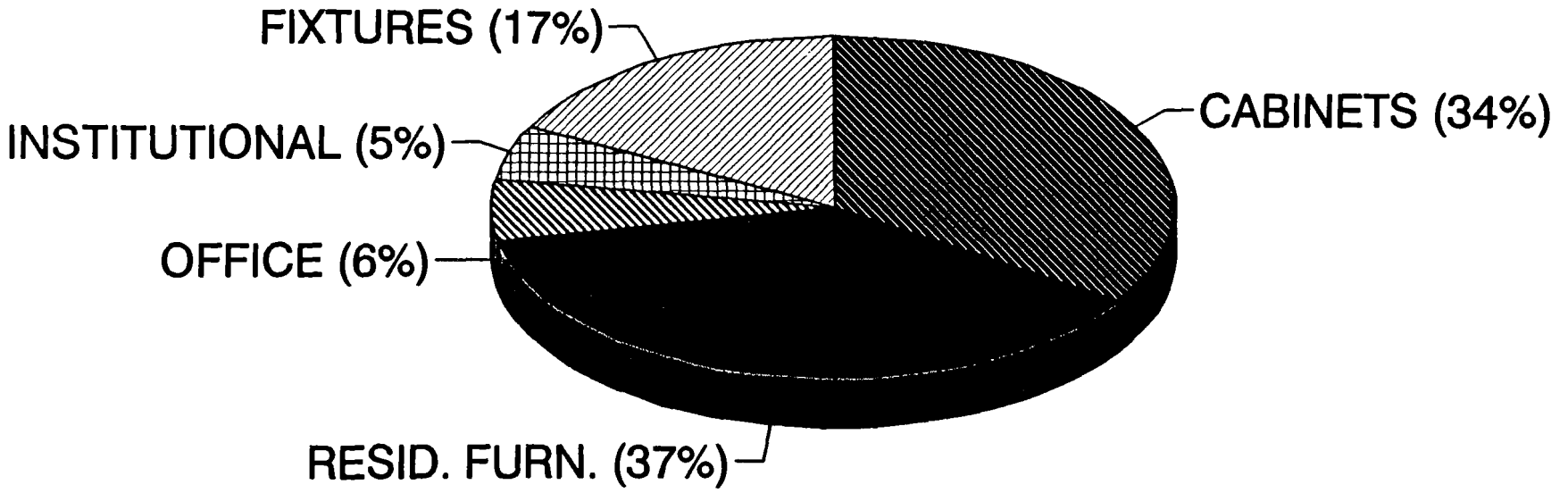

DISTRIBUTION OF FACILITIES BY SIZE

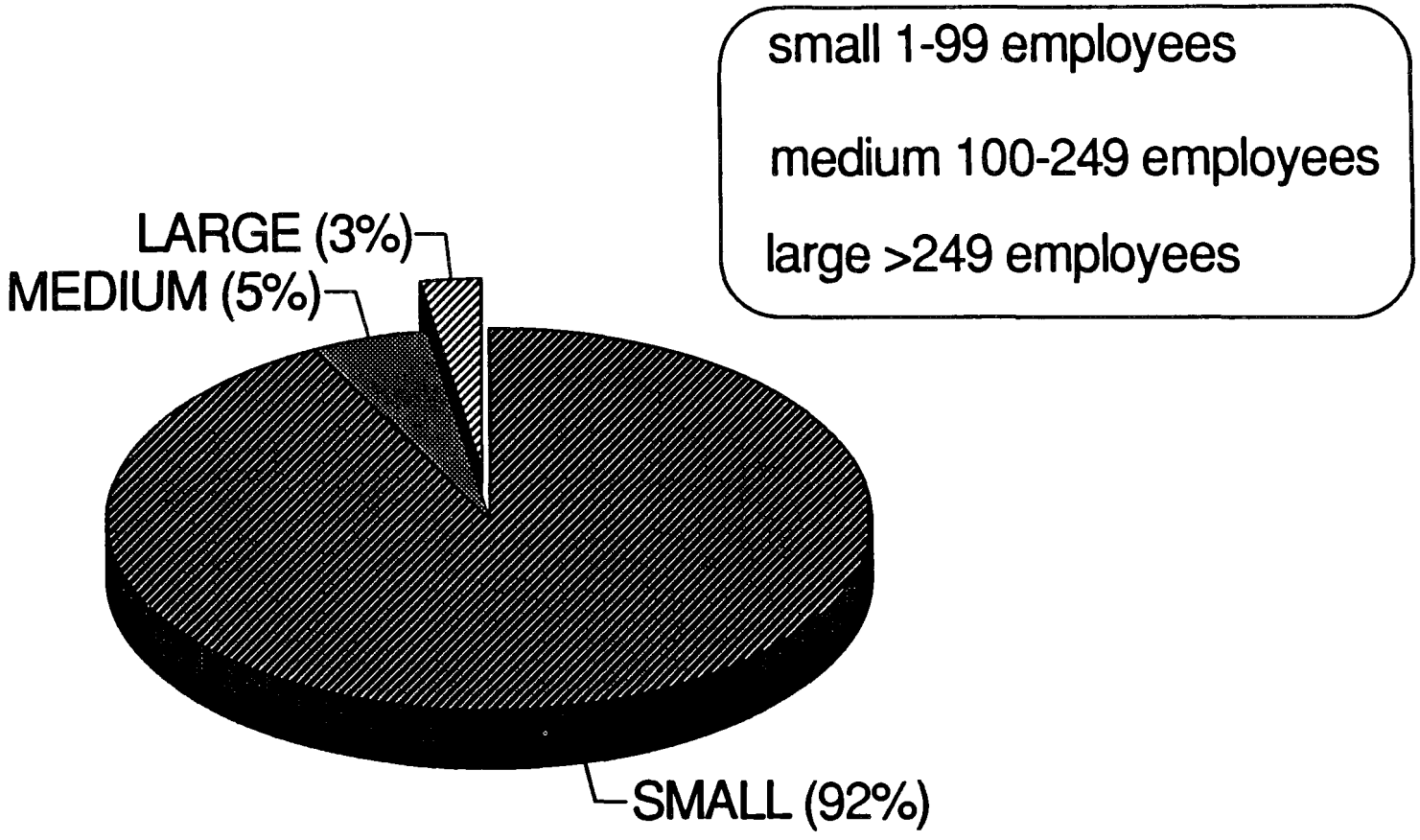

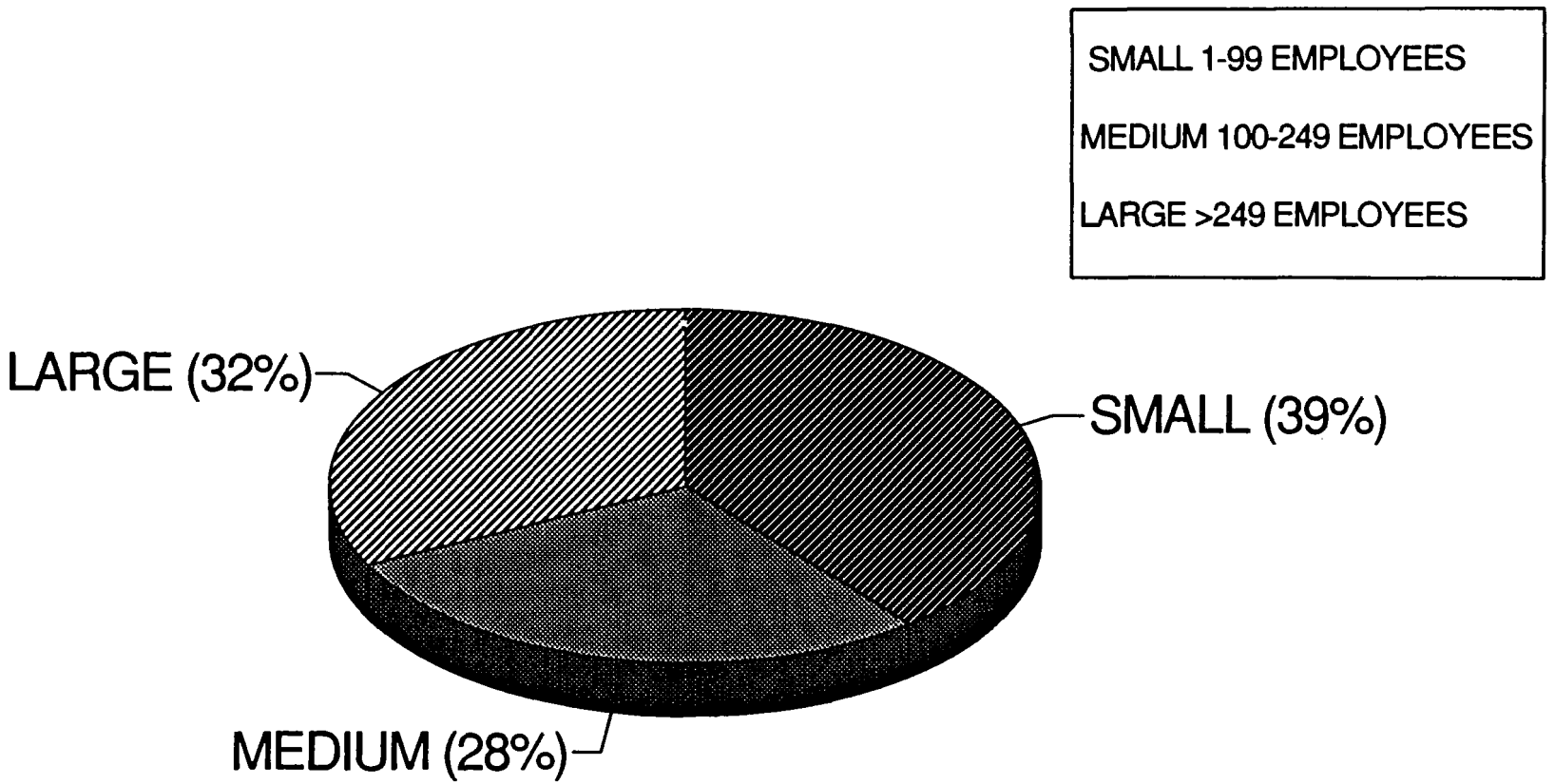
SMALL 1-99 EMPLOYEES
MEDIUM 100-249 EMPLOYEES
LARGE >249 EMPLOYEES
LARGE (32%)
SMALL (39%)
MEDIUM (28%)

FINISHING SCHEMATIC

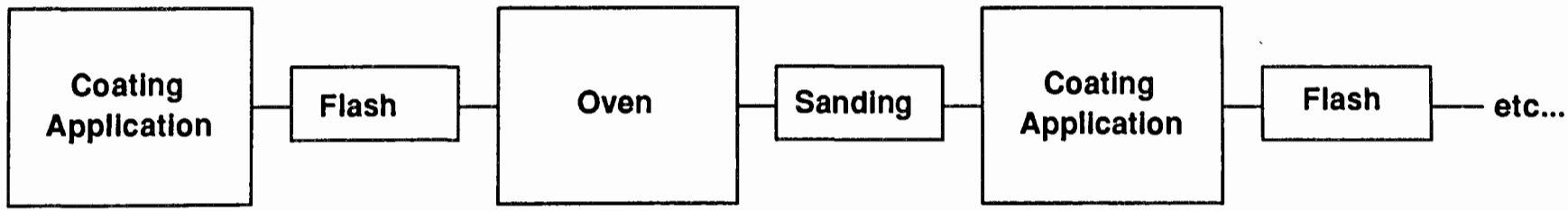

Finishing Operations ~ 94% total VOC emissions
Cleanup Operations ~ 6% total VOC emissions

REGULATORY ANALYSIS

ONCE THE INDUSTRY AND FINISHING PROCESS WERE CHARACTERIZED, THE REGULATORY ANALYSIS WAS CONDUCTED, CONSISTING OF:

- DEVELOPMENT OF MODEL PLANTS
- EVALUATION OF VOC CONTROL ALTERNATIVES
- DEVELOPMENT OF RACT OPTIONS
- IMPACT ANALYSIS

MODEL PLANTS

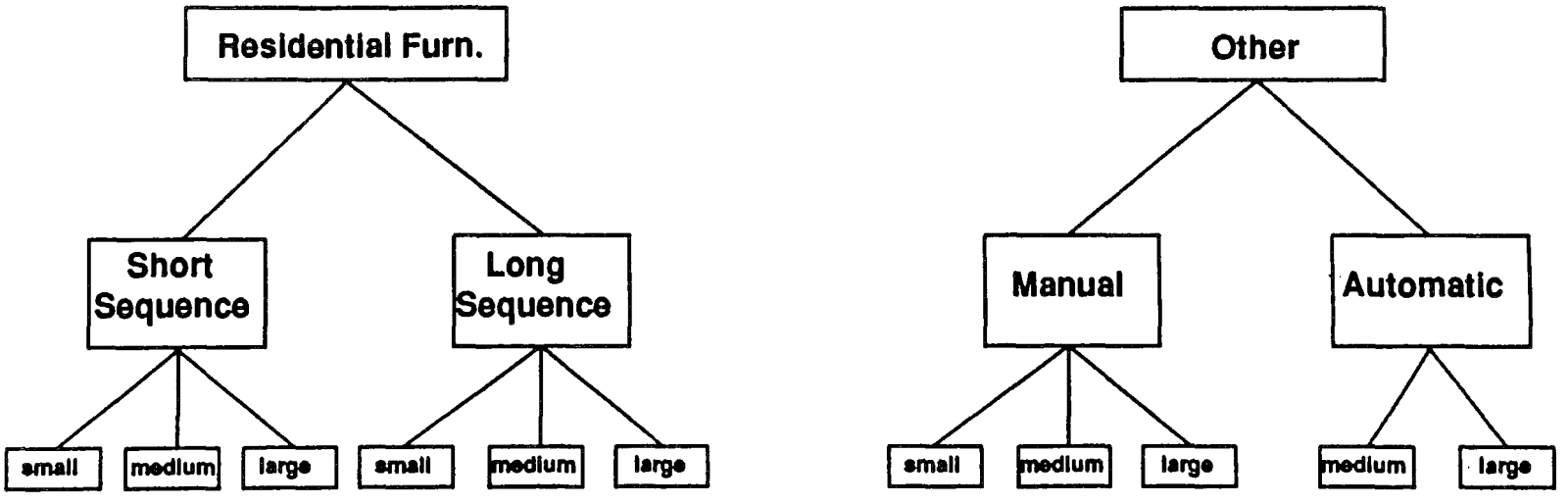

Small 50 TPY

Medium 225 TPY

Large 500 TPY

FINISHING SEQUENCES

OFFICE/CABINET	RESID. FURN. (SHORT)	RESID. FURN. (LONG)
STAIN	STAIN	STAIN
STAIN	STAIN	STAIN
SEALER	WASHCOAT	STAIN
TOPCOAT	SEALER	WASHCOAT
	TOPCOAT	FILLER
	TOPCOAT	WIPING STAIN/GLAZE
		SEALER
		TOPCOAT
		HIGHLIGHT
		TOPCOAT
		HIGHLIGHT
		TOPCOAT

RELATIVE VOC EMISSIONS-FINISHING STEPS (PERCENT)

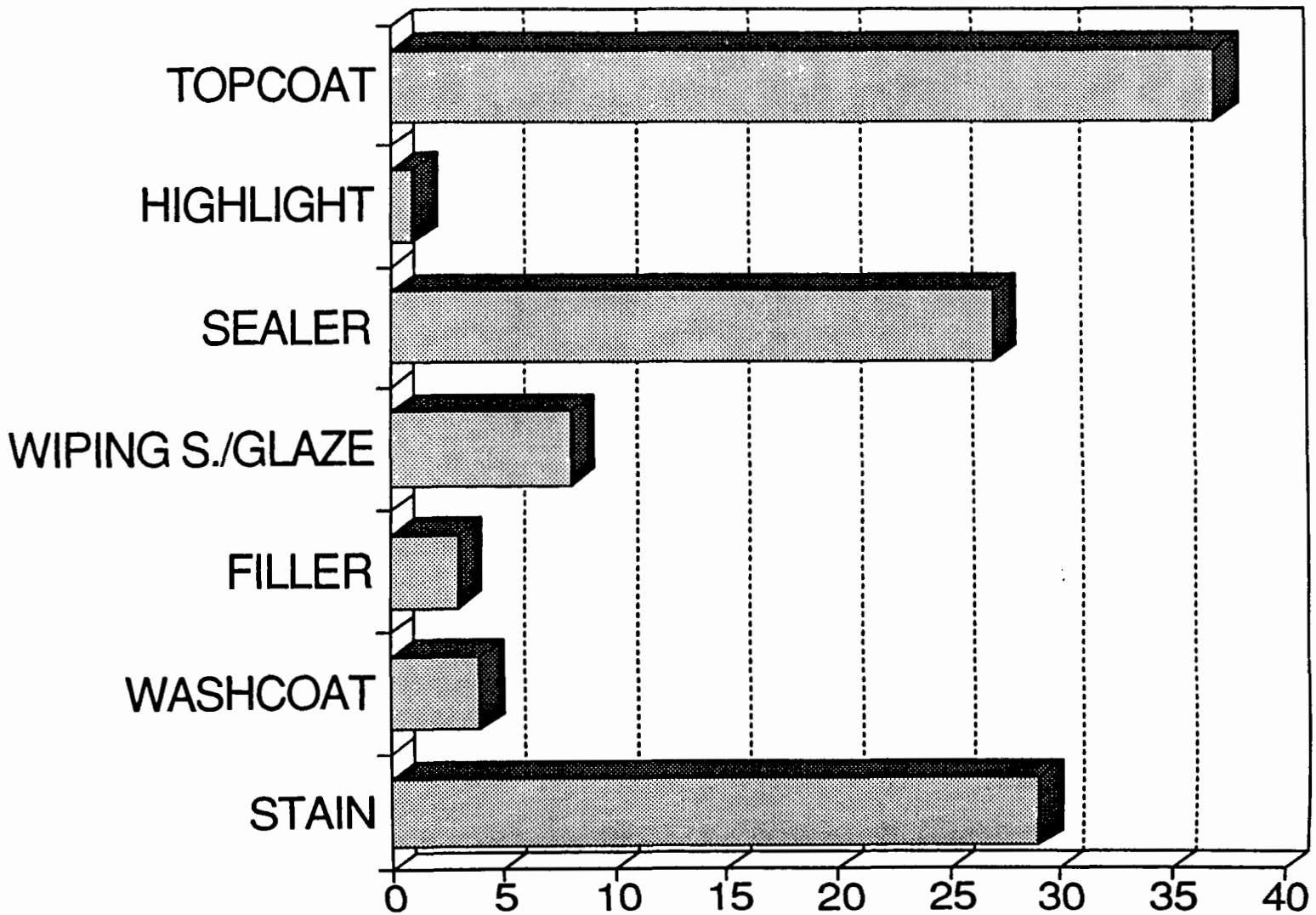

NOTE: HIGHLIGHT, WIPING S., & FILLER USED ONLY IN LONG SEQUENCE.

PARAMETERS CONSIDERED DURING CONTROL METHOD EVALUATION

- CONTROL TECHNIQUES AVAILABLE
- TYPES OF COATINGS PRESENTLY USED
- FINISHING SEQUENCE / INDUSTRY SEGMENT
- TOTAL VOC EMISSIONS AND CONCENTRATION
- NUMBER AND TYPES OF VOC'S PRESENT IN EXHAUST
- EXHAUST FLOWRATE TO BE CONTROLLED

CONTROL ALTERNATIVES FOR THE FINISHING PROCESS

- LOWER-VOC COATINGS
- ADD-ON CONTROLS
  - RECUPERATIVE THERMAL INCINERATION
  - REGENERATIVE THERMAL INCINERATION
  - CATALYTIC INCINERATION
  - COMBINED ADSORPTION/THERMAL INCINERATION
- COMBINATION OF LOWER-VOC COATINGS AND ADD-ON CONTROLS
- EXHAUST FLOW REDUCTION IS ESSENTIAL FOR ADD-ON CONTROLS
  - RECIRCULATION
  - AIR CURTAIN SYSTEM

CONTROL ALTERNATIVES FOR CLEANUP OPERATIONS

- WORK PRACTICE MODIFICATIONS TO MINIMIZE EVAPORATION
- REFORMULATION OF CLEANUP MATERIALS
- ADD-ON CONTROLS
- ANALYSIS NOT COMPLETE

DEVELOPMENT OF RACT OPTIONS

- CONTROL ALTERNATIVES EVALUATED FOR EACH MODEL PLANT

- PERMUTATIONS OF DIFFERENT CONTROLS BEING APPLIED TO THE MODEL PLANTS WERE DEVELOPED TO FORM THE RACT OPTIONS

- UNDER A SINGLE RACT OPTION, DIFFERENT CONTROLS MAY BE APPLIED TO DIFFERENT MODEL PLANTS

- THUS, RACT OPTION DESCRIPTORS DO NOT NECESSARILY INDICATE THE CONTROL STRATEGY APPLIED TO ALL MODEL PLANTS

RACT OPTIONS

1. FULL WATERBORNE

2. HYBRID WATERBORNE

3. POLYESTER/POLYURETHANE

4. POLYESTER/POLYURETHANE WITH WATERBORNE

5. HYBRID WATERBORNE AND ADD-ON CONTROLS ON SELECTED STEPS

6-9 ADD-ON CONTROLS FOR ALL COATING STEPS

- WITHOUT RECIRCULATION
- WITH RECIRCULATION
- WITH AIR CURTAIN SYSTEM

RACT OPTION 1

FULL WATERBORNE

- O/C & RESIDENTIAL SHORT - FULL WATERBORNE
- RESIDENTIAL LONG - HYBRID WATERBORNE

RACT OPTION 2

HYBRID WATERBORNE

- WATERBORNE SEALER, TOPCOAT, AND HIGHLIGHT (AS APPLICABLE) FOR ALL PLANTS

- CONVENTIONAL SOLVENTBORNE FOR ALL OTHER STEPS

RACT OPTION 3

POLYESTER/POLYURETHANE

- SMALL PLANTS USE HYBRID WATERBORNE
- POLYESTER/POLYURETHANE SEALER, TOPCOAT, AND FILLER (AS APPLICABLE) FOR ALL MEDIUM AND LARGE PLANTS
- CONVENTIONAL SOLVENTBORNE FOR ALL OTHER STEPS

RACT OPTION 4

POLYESTER/POLYURETHANE WITH WATERBORNE

- SAME AS OPTION 3 EXCEPT:

- O/C & RESIDENTIAL SHORT - WATERBORNE STAIN AND WASHCOAT (AS APPLICABLE)

- RESIDENTIAL LONG - WATERBORNE HIGHLIGHT, REST CONVENTIONAL SOLVENTBORNE

RACT OPTION 5

HYBRID WATERBORNE & ADD-ON CONTROLS ON SELECTED STEPS

- HYBRID WATERBORNE COATING SYSTEMS (AS DESCRIBED PREVIOUSLY) FOR ALL PLANTS

- ADD-ON CONTROLS USED ON STAIN OR STAIN AND WASHCOAT OPERATIONS AT ALL FACILITIES WITH MORE THAN 50 EMPLOYEES

RACT OPTIONS 6-9

ADD-ON CONTROLS FOR ALL COATING STEPS

- ALL FACILITIES WITH FEWER THAN 50 EMPLOYEES EXEMPT
- FOR EACH RACT OPTION, ADD-ON CONTROLS EVALUATED:
  - WITHOUT RECIRCULATION OR AIR CURTAIN SYSTEM
  - WITH RECIRCULATION
  - WITH AIR CURTAIN SYSTEM

NATIONWIDE IMPACTS

FACILITIES IN OZONE NONATTAINMENT AREAS

RACT OPTION	DESCRIPTION	NATIONWIDE VOC EMISSION REDUCTION (1000 Mg/YR)	(%)	NATIONWIDE ANNUAL CONTROL COST (MM $)	AVERAGE COST EFFECTIVENESS ($/Mg)
1	FULL WATERBORNE	94.8	72	229	2400
2	HYBRID WATERBORNE	73.4	56	147	2000
3	POLYESTER/POLYURETHANE	69.9	53	264	3800
4	POLYESTER/POLYURETHANE HYBRID	80.9	61	260	3200
5	HYBRID WATERBORNE & ADD-ON	91.2	69	347	3800
6-9	ADD-ON CONTROLS				
	W/OUT RECIRCULATION	64.2	49	331-418	5200-6500
	W/RECIRCULATION	64.2	49	244-293	3800-4600
	W/AIR CURTAIN SYSTEM	66.1	50	181-211	2800-3200

UNICARB SYSTEM®

NAPCTAC MEETING

NOVEMBER 21, 1991

11/15/91
1-HTW

WHAT IS THE UNICARB® SYSTEM?

THE UNICARB® SYSTEM IS A POLLUTION PREVENTION TECHNOLOGY FOR THE APPLICATION OF SPRAY APPLIED INDUSTRIAL COATINGS

HOW DOES THE UNICARB® SYSTEM WORK?

THE UNICARB® SYSTEM SUBSTITUTES CARBON DIOXIDE FOR A SIGNIFICANT AMOUNT OF SOLVENTS IN CONVENTIONAL SPRAY APPLIED COATINGS, THEREBY REDUCING VOC'S AND AIR TOXICS.

UNICARB® COATINGS ARE HIGH IN SOLIDS, AND CAN BE APPLIED MANUALLY, AUTOMATICALLY, ELECTROSTATICALLY, NON-ELECTROSTATICALLY WITH AIRLESS OR AIR-ASSISTED AIRLESS TYPE SPRAY GUNS.

WHERE IS THE UNICARB® SYSTEM APPLICABLE IN THE WOOD FURNITURE INDUSTRY?

- NITROCELLULOSE TOPCOATS AND SEALERS

  FOR: RESIDENTIAL FURNITURE
  CABINETS
  OFFICE/INSTITUTIONAL

- PIGMENTED LACQUERS AND ENAMELS

- SINGLE COMPONENT ACRYLICS, POLYESTERS AND URETHANES

- 2 COMPONENT EQUIPMENT AND COATINGS ARE CURRENTLY IN THE DEVELOPMENTAL STAGE AND SHOULD BE AVAILABLE IN 1992 FOR IN-PLANT TESTING

HOW MUCH CAN THE UNICARB® SYSTEM REDUCE VOC'S?

- FOR NITROCELLULOSE SEALER AND TOPCOAT APPLICATIONS 60%-75%

- FOR THE MODEL PLANTS LISTED IN TABLE 4-4 OF THE CTG DRAFT, THE TOTAL FINISHING LINE VOC EMISSIONS WOULD BE REDUCED BY:

FINISHING LINES	VOC'S	AIR TOXICS
LONG FINISHING LINES	37%	50%
SHORT FINISHING LINES	44%	60%
OFFICE/CABINET	44%	50%

THIS ASSUMES THE UNICARB® SYSTEM IS USED FOR BOTH NITROCELLULOSE SEALER AND TOPCOAT APPLICATIONS AT A 65% REDUCTION OF VOC'S (4.7LB/GAL), AND AIR TOXICS REDUCTION OF 85%

- UNICARB® SYSTEM NITROCELLULOSE COATINGS HAVE BEEN FORMULATED WITH A 90% REDUCTION IN AIR TOXICS

11/15/91
5-HTW

IS THE UNICARB® SYSTEM BEING USED COMMERCIALLY?

- THE SYSTEM HAS BEEN INSTALLED AND IS OPERATING COMMERCIALLY AT PENNSYLVANIA HOUSE

- A SUCCESSFUL DEMONSTRATION OF THE SYSTEM WAS CONDUCTED AT LEHIGH

- SEVERAL OTHER FURNITURE MANUFACTURERS ARE CURRENTLY CONDUCTING IN-PLANT TRIALS IN VIRGINIA, MISSISSIPPI, CALIFORNIA AND ARIZONA

- TRIALS ARE BEING CONDUCTED IN SEVERAL OTHER INDUSTRIES INCLUDING: AUTOMOTIVE OEM, AUTOMOTIVE COMPONENT, PLASTIC CABINETS AND PLASTIC AUTOMOTIVE COMPONENTS

11/15/91
6-HTW

ADVANTAGES FOR SEALER AND TOPCOAT APPLICATIONS

1) CONTINUED USE OF NITROCELLULOSE COATINGS

2) REDUCED VOC'S...65%-75% FOR SEALERS AND TOPCOATS

3) REDUCED AIR TOXICS...80%-90%

4) EASY TO RETROFIT

5) RELATIVELY LOW CAPITAL INVESTMENT

6) HIGHER FILM BUILD

7) POSSIBLE COST SAVINGS WHERE MULTIPLE SEALERS OR TOPCOATS ARE APPLIED

8) COMPLIMENTARY TO OTHER COATING SYSTEMS

9) MOVES SOLVENT EMISSIONS FROM BOOTH TO OVEN

10) POLLUTION PREVENTION TECHNOLOGY

11/15/91
7-HTW

CLASSIC SYSTEMS INC.

890

P.O. Box 6130 • Buffalo Shoals Rd. • Statesville, N.C. 28677 • Tel 704-878-9523/Fax 704-878-2914

November 21, 1991

UNITED STATES ENVIRONMENTAL PROTECTION AGENCY

"Finishing Systems for Wood Furniture"

- Emerging Technology -

I. Introduction

Classic Systems, Inc. - Turnkey Contractor - primarily furniture industry

A. Involvement in new technology for controlling VOC emissions

B. CamBooth - unique use of low velocity, push-pull air curtains to isolate operator from unhealthy work environment and greatly reduce exhaust air

II. Background for Development - analysis of typical problems and complaints:

A. Inadequate capture of fumes and over-spray in typical open front spray booths

B. Inadequate make-up air
   1. Negative pressure in finishing room - infiltration of dust degrades quality of end product
   2. Cold and drafty work place in winter
   3. High operating costs

C. Pending VOC reduction requirements - high initial and operating costs with present large volume exhaust system

Conclusion: Most problems could be resolved by greatly reducing the amount of exhausted air from the work space

III. Review Transparencies

A. Typical System - individual exhaust for oven, flash tunnel and spray booths (open ends)

B. CamBooth System - one exhaust for all segments (closed ends)

C. Views (front, plan and end)

D. Air flow patterns

E. Finishing Room - Typical
   1. Exhaust fan unit
   2. Diverter dampers
   3. VOC system tie-in

F. Energy cost comparisons (basic benefits)

IV. Slides

A. Various views

B. Airflow patterns
   1. Front air curtain
   2. End air curtain
   3. Internal down draft

C. Demonstrate how worker is protected from internal environmental

V. Questions and answers

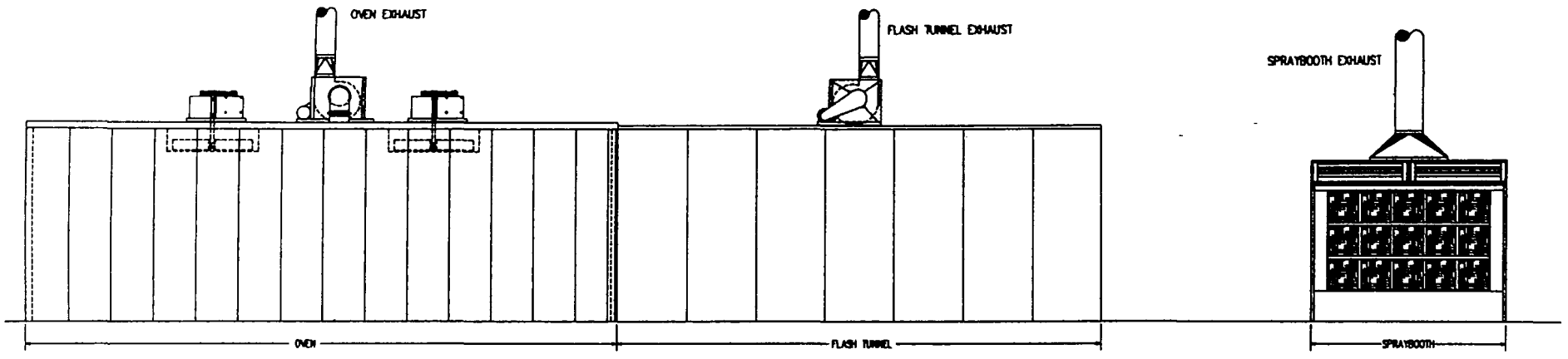

CONVENTIONAL FINISHING SYSTEM LAYOUT

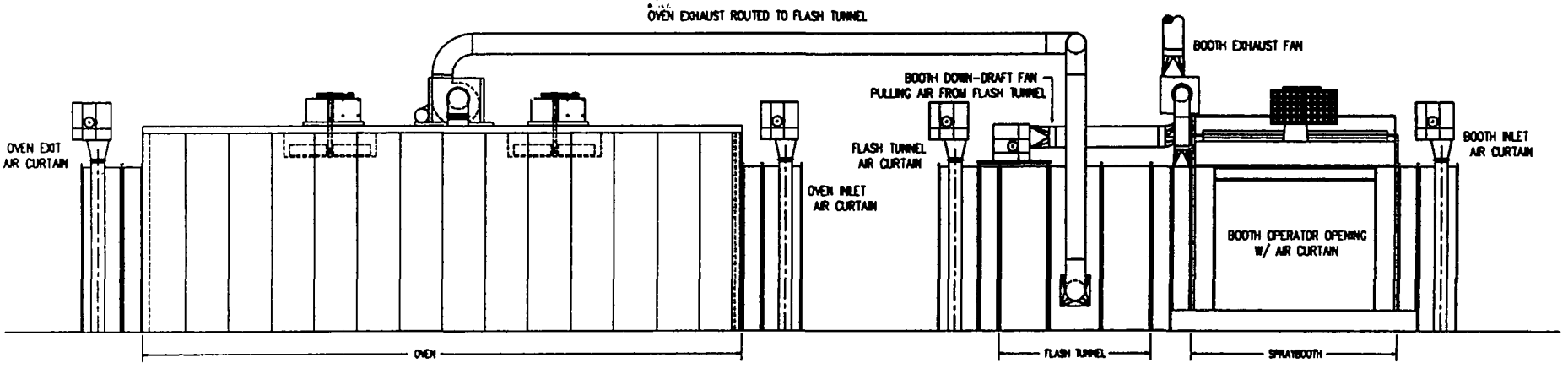

NEW CAMBOOTH FINISHING SYSTEM LAYOUT

CLASSIC SYSTEMS, INC.
P.O. BOX 6130
STATESVILLE, NORTH CAROLINA 28677
TELEPHONE 704-878-9523
TELEFAX 704-878-2914

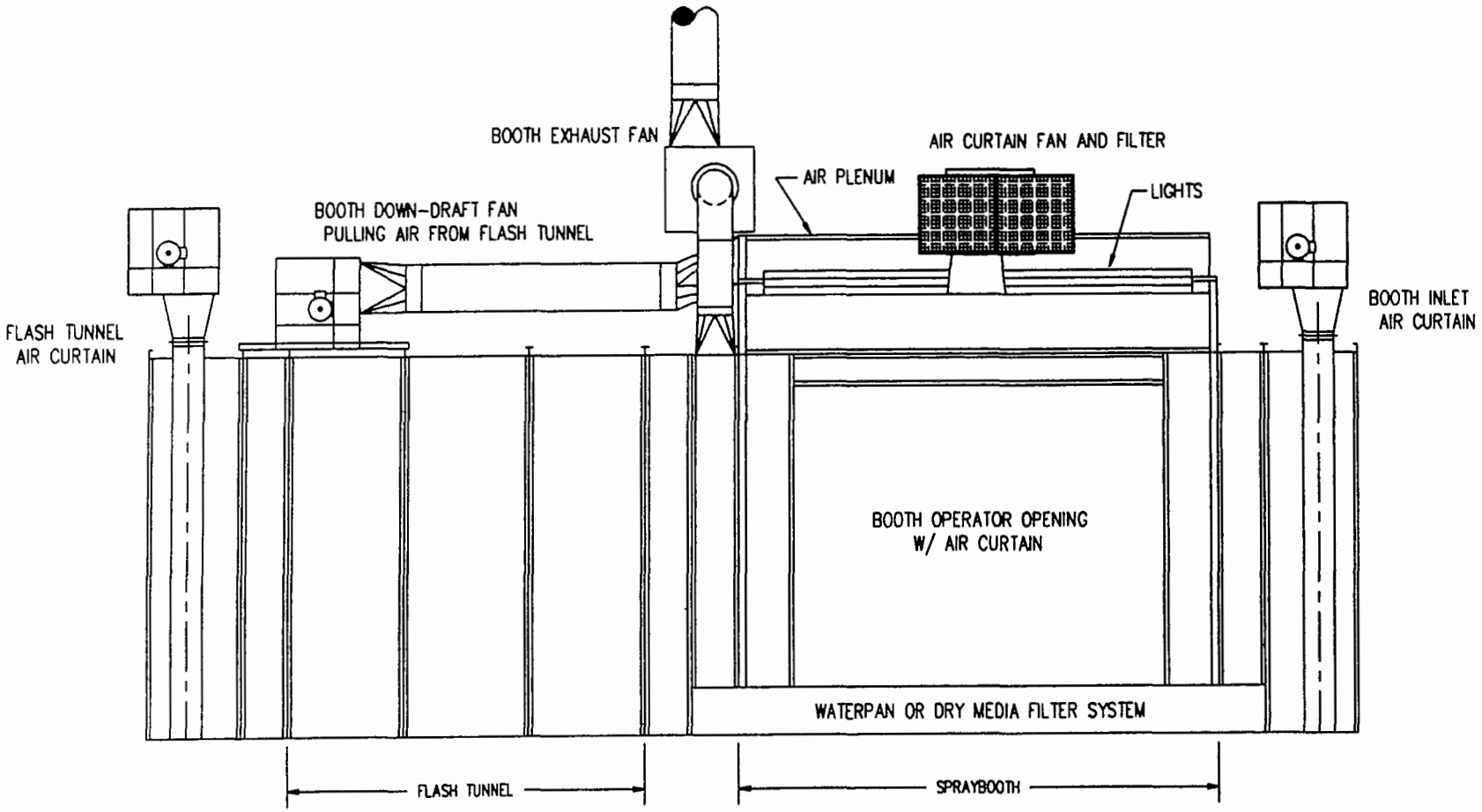

FRONT ELEVATION

CLASSIC SYSTEMS, INC.
P.O. BOX 6320
STATESVILLE, NORTH CAROLINA 28677
TELEPHONE 704-878-9923
TELEFAX 704-878-9924

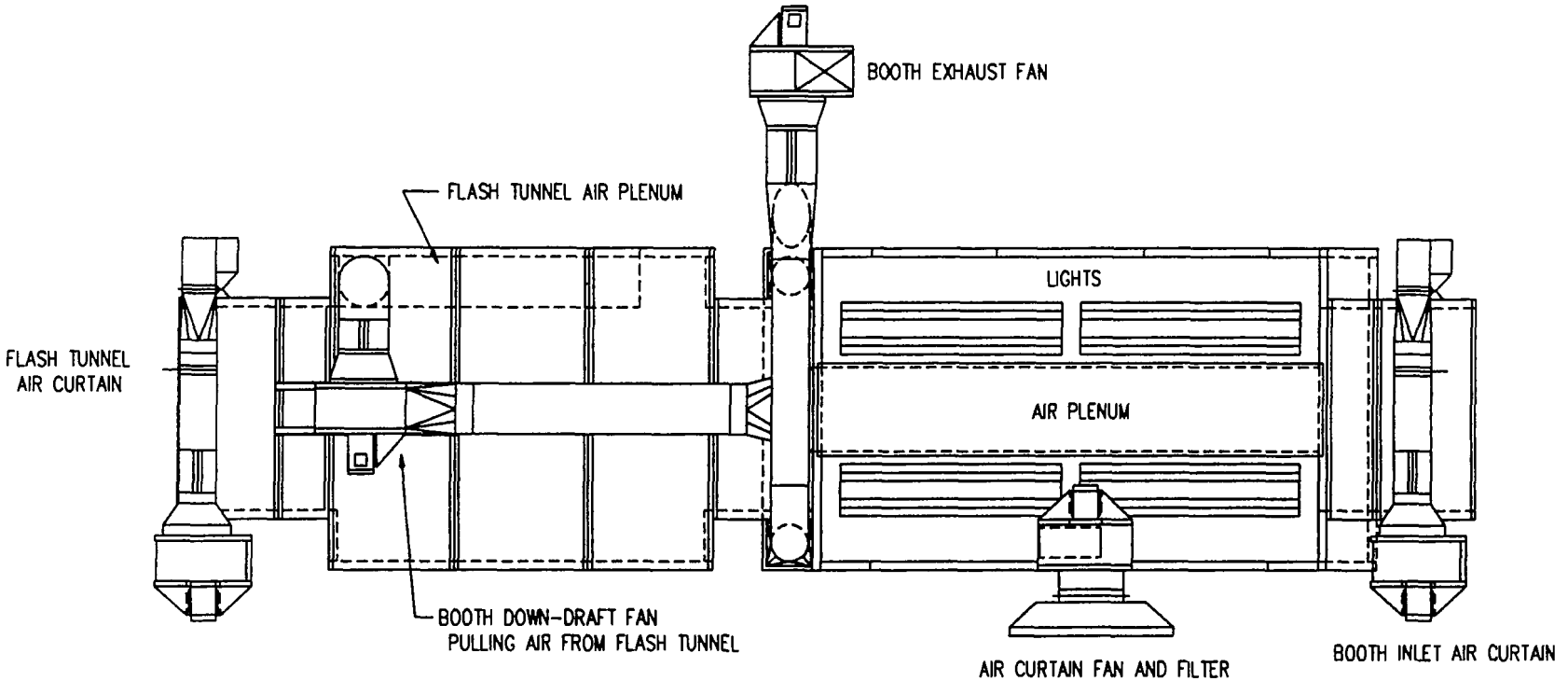

PLAN VIEW

CLASSIC SYSTEMS, INC.
P.O. BOX [illegible]
STATESVILLE, NORTH CAROLINA 28677
TELEPHONE 704-878-[illegible]
TELEFAX 704-878-[illegible]

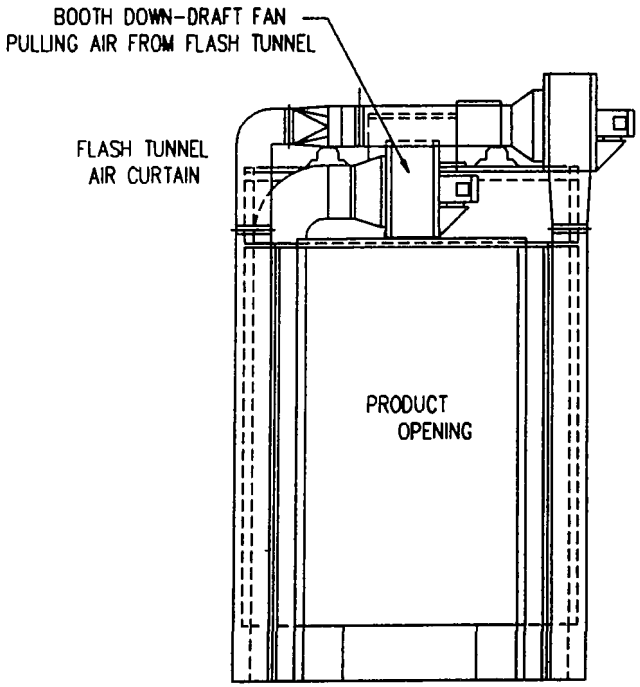

END ELEVATION AT FLASH TUNNEL

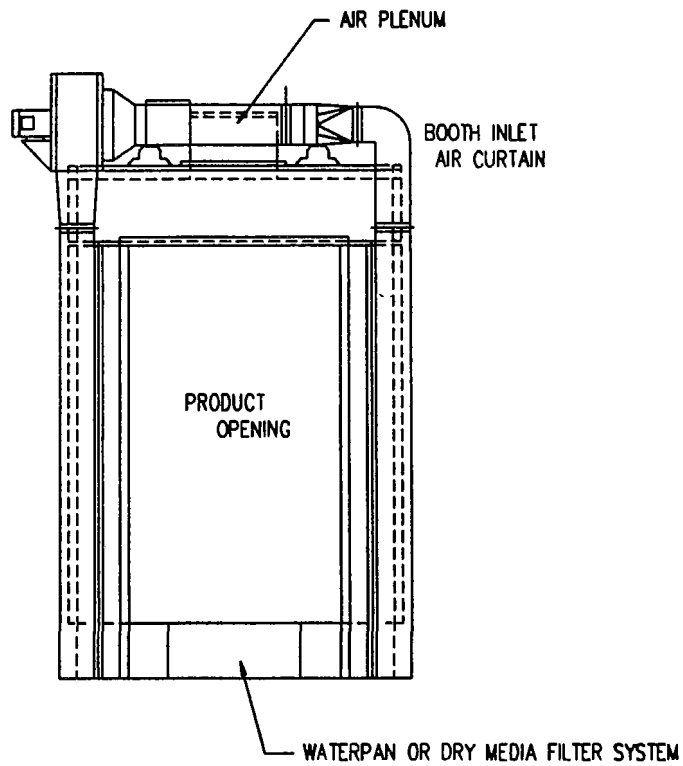

END ELEVATION AT SPRAYBOOTH

CLASSIC SYSTEMS, INC.
P.O. BOX 6189
STATESVILLE, NORTH CAROLINA 28677
TELEPHONE 704-878-0063
TELEFAX 704-878-0014

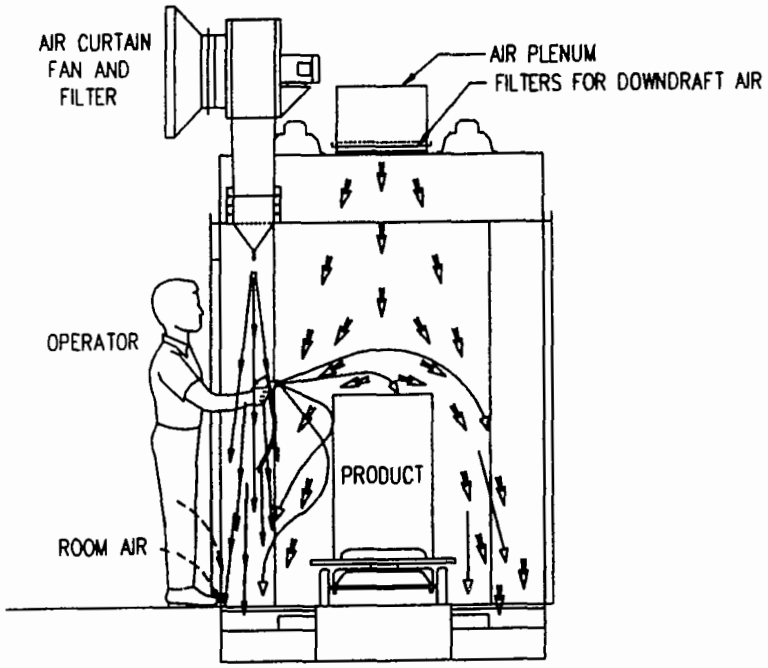

WATERPAN FILTER SYSTEM

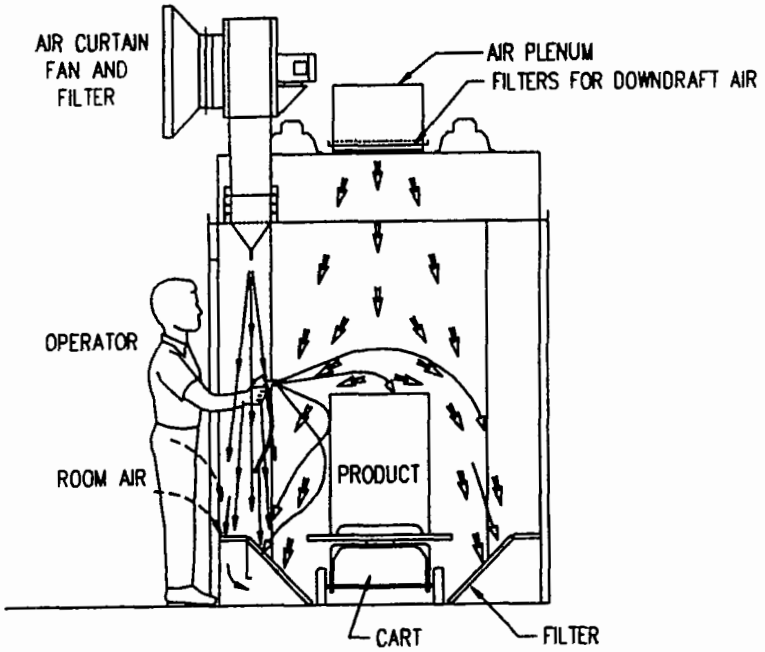

DRY MEDIA FILTER SYSTEM

→ AIR CURTAIN AT 600 FPM

→ DOWNDRAFT AIR AT 50 FPM

→ FINISHING SPRAY FROM SPRAY GUN

INTERIOR VIEW OF FLOW PATTERN

CLASSIC SYSTEMS, INC.
P.O. BOX 6236
STATESVILLE, NORTH CAROLINA 28677
TELEPHONE 704-878-0663
TELEFAX 704-878-8914

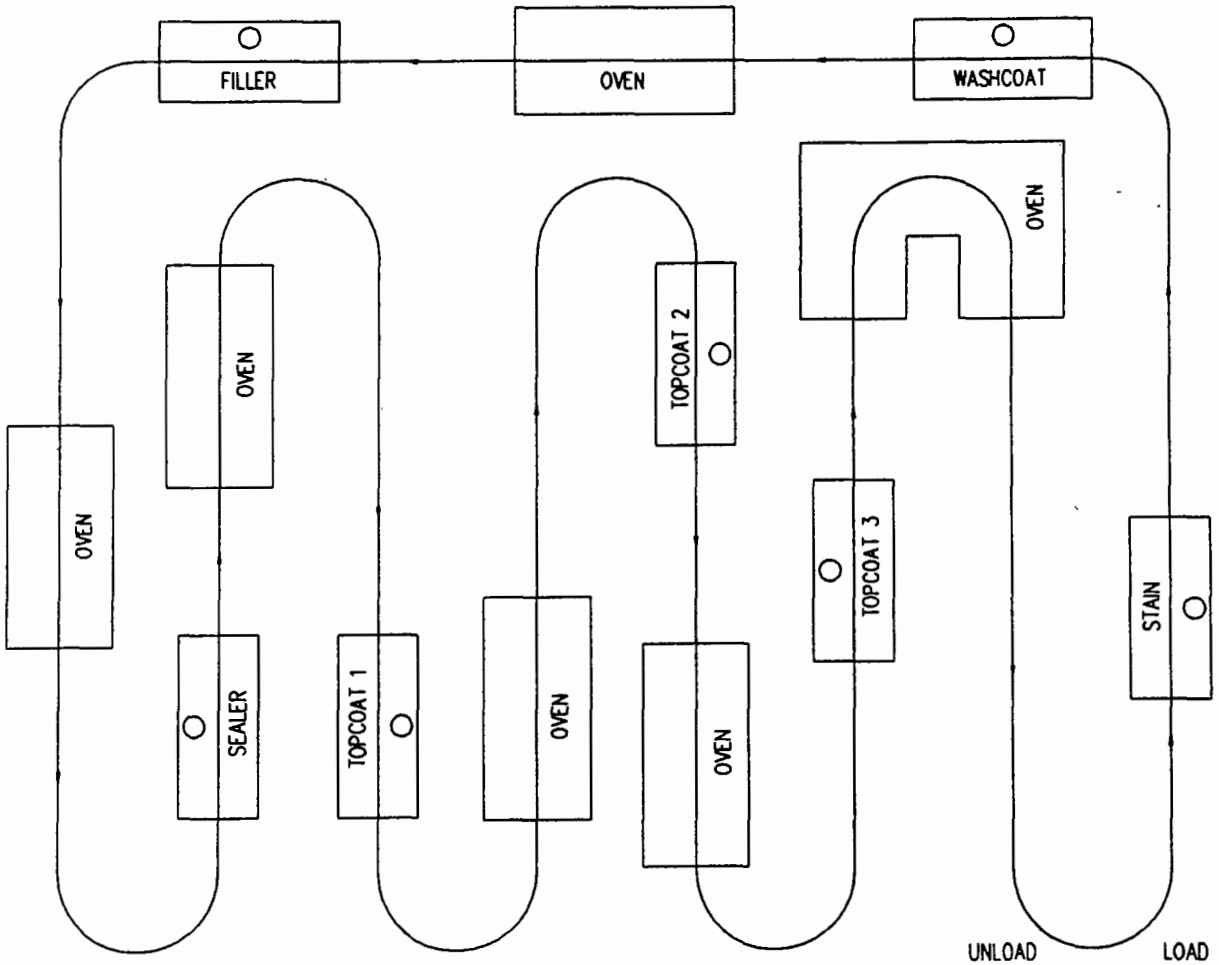

TYPICAL FINISHING SYSTEM

CLASSIC SYSTEMS, INC.
P.O. BOX 6128
STATESVILLE, NORTH CAROLINA 28677
TELEPHONE 704-879-9863
TELEFAX 704-879-2884

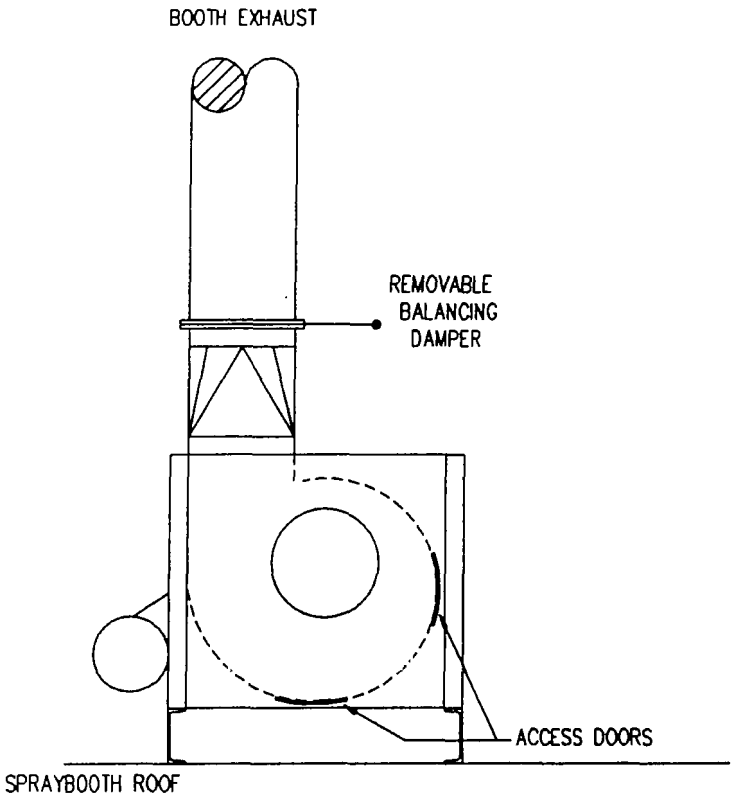

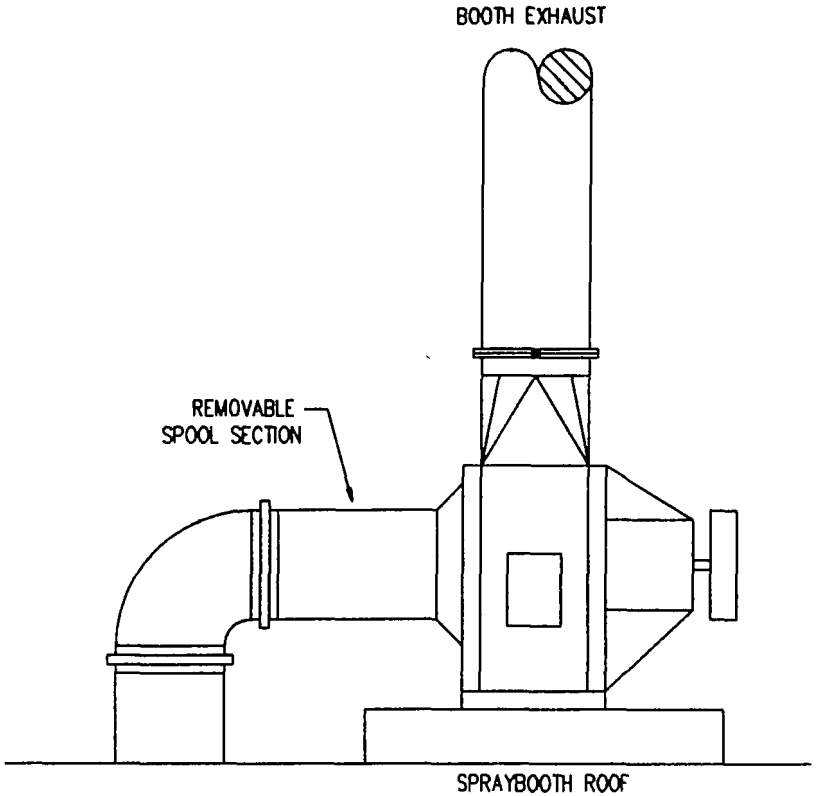

SPRAYBOOTH EXHAUST FAN

CLASSIC SYSTEMS, INC.
P.O. BOX [illegible]
STATESVILLE, NORTH CAROLINA 28677
TELEPHONE 704-878-[illegible]
TELEFAX 704-878-[illegible]

EXHAUST TO ATMOSPHERE (CLOSED)

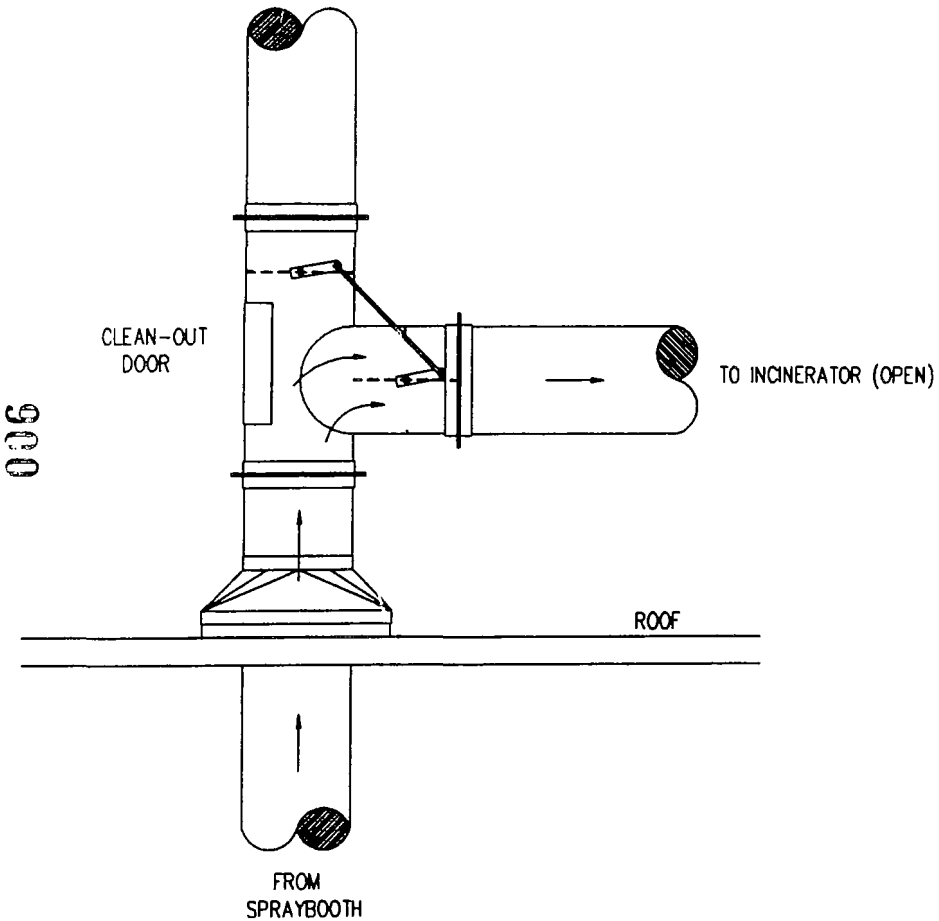

EXHAUST TO ATMOSPHERE (OPEN)

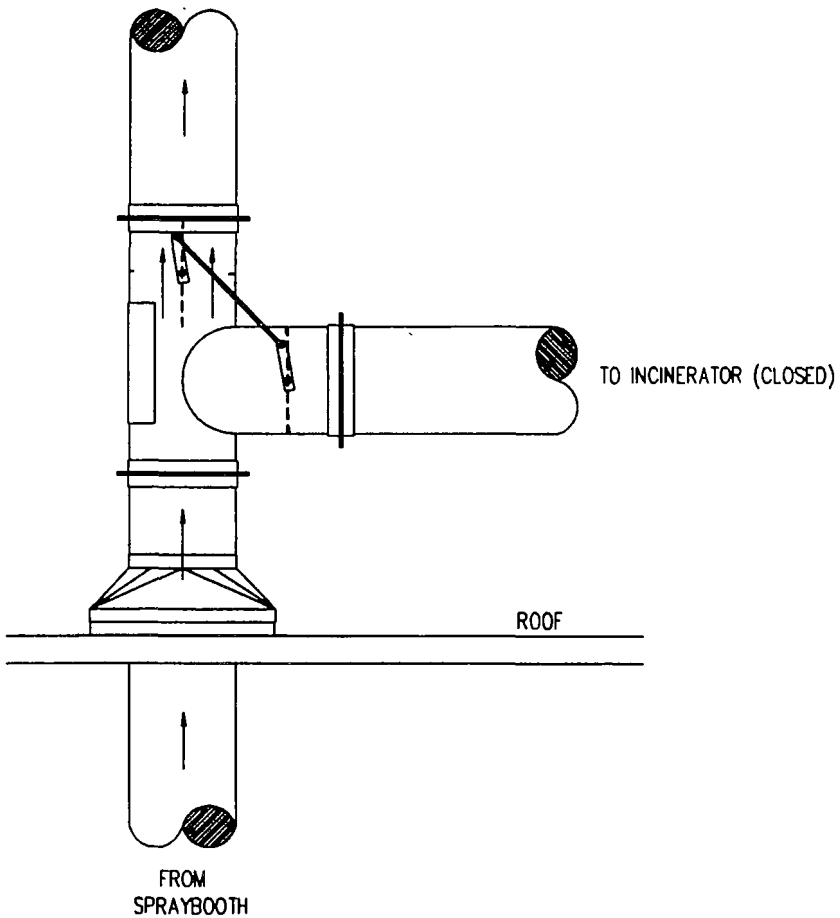

SPRAYBOOTH EXHAUST DIVERTER VALVE

CLASSIC SYSTEMS, INC.
P.O. BOX 5230
STATESVILLE, NORTH CAROLINA 28677
TELEPHONE 704-878-9563
TELEFAX 704-878-2214

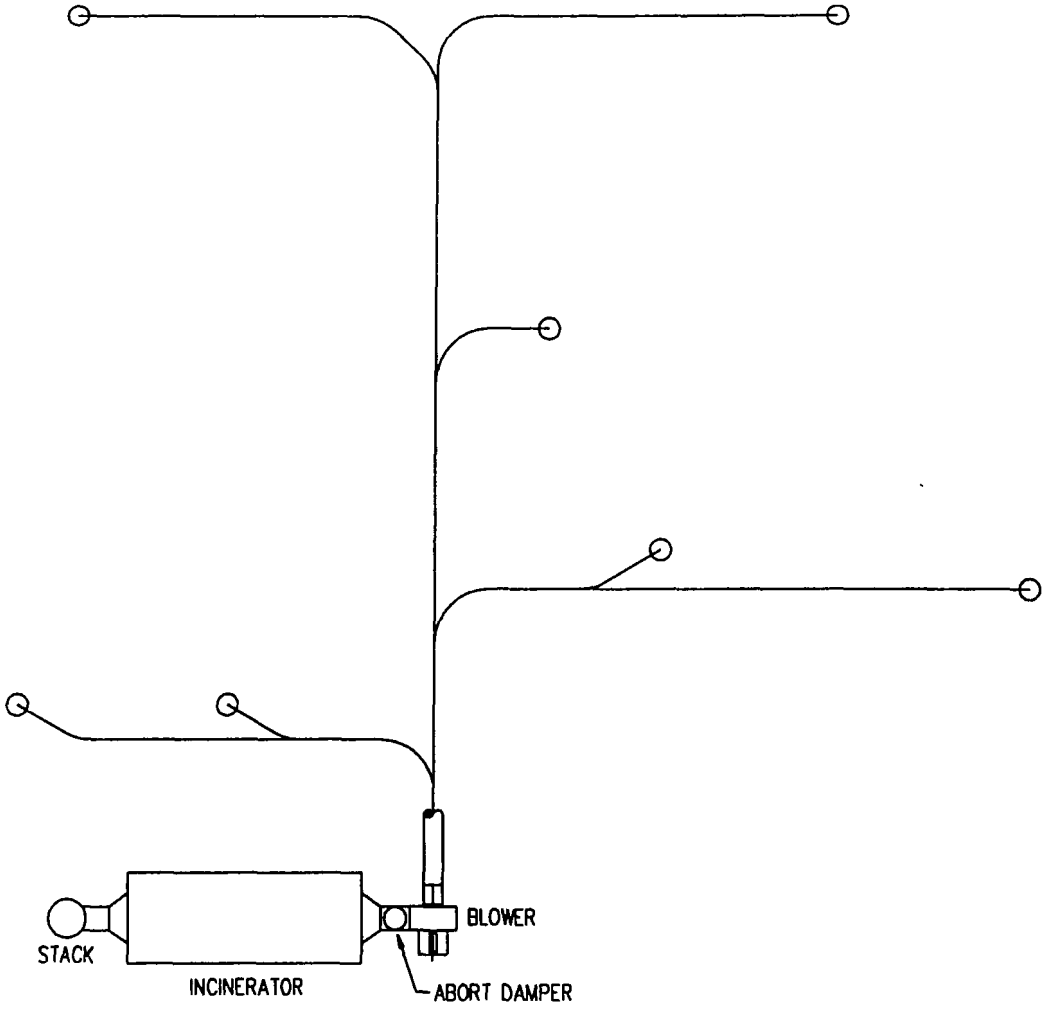

VOC INCINERATION SYSTEM

CLASSIC SYSTEMS, INC.
P.O. BOX 2130
STATESVILLE, NORTH CAROLINA 28677
TELEPHONE 704-878-2883
TELEFAX 704-878-2914

ENERGY COST EVALUATION

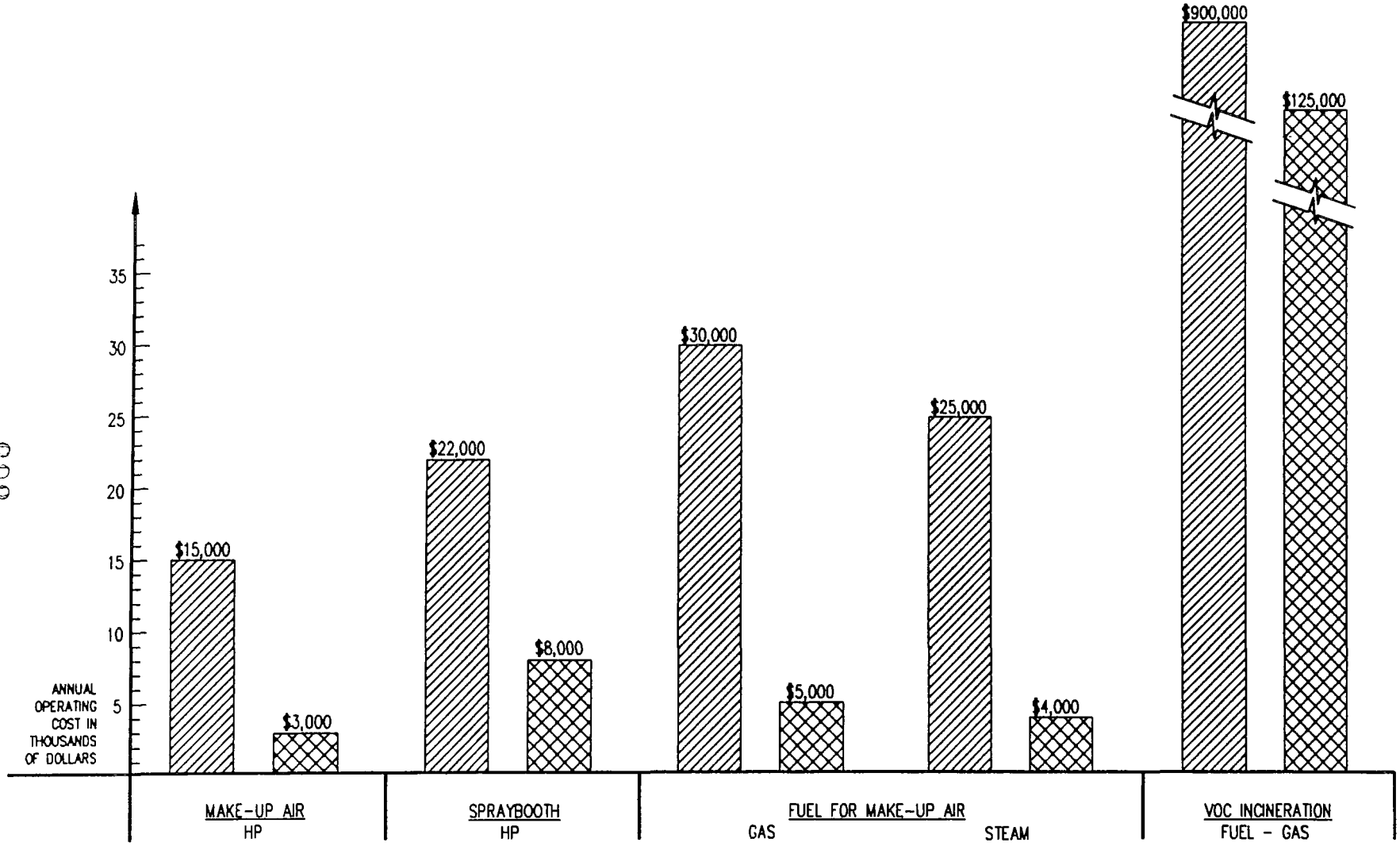

BASIC ASSUMPTION: A. (6) EACH CONVENTIONAL SPRAYBOOTH SYSTEM = 120,000 CFM
(6) EACH CAMBOOTH SYSTEM = 21,000 CFM
B. HEATING COST - 1 SHIFT, 6 DAYS/WEEK, 18 WEEKS/YEAR, AND AVERAGE 50°F TEMPERATURE RISE: GAS @ $5/MBTU PER HOUR
STEAM @ $4/1000# PER HOUR
C. HORSEPOWER COST @ $300 PER HP/YR
D. THERMAL OXIDIZER - WITH HEAT RECOVERY, VOC FUEL VALVE INCLUDED, 2600 ANNUAL OPERATING HOURS

CONVENTIONAL SPRAYBOOTH SYSTEM

CAMBOOTH SYSTEM

CLASSIC SYSTEMS, INC.
P.O. BOX 2520
STATESVILLE, NORTH CAROLINA 28677
TELEPHONE 704-878-8663
TELEFAX 704-878-2914

Saves Energy & Materials

80% Reduction in CFM Requirements.*

- reduces energy costs
- substantially less airflow to exhaust control devices
- increases transfer efficiency of spray gun

*Compared to typical conventional designs.

Better Quality Production

Reduced Airflow Allows:

- better operator control of coatings applications
- greatly enhanced dust free environment for cleaner finish

Safer Operation

Helps Meet New EPA and OSHA Standards by:

- limiting operator exposure to VOC vapors
- lower decibel levels

CAMBOOTH Specfications

BASIC DESIGN:
down-draft with dry filters, air curtains at operator station and all entry and exit points.

DIMENSIONS:
Based on product size and finishing schedule.

EXHAUST RATE:
3000 scfm per 20′ booth.

HORSEPOWER:
3 HP per 20′ booth.

The CAMBOOTH is Adaptable*

- can be installed in present booth location
- works with overhead or pallet-type conveyor line
- can be equipped with the following options:
  - Flash Tunnel
  - Drying Oven
  - Catalytic or Thermal Oxidizer
  - Carbon Absorption Filter Module
- can be supplied as water-wash booth

*MODEL AVAILABLE FOR INSPECTION AND PRODUCT TESTING

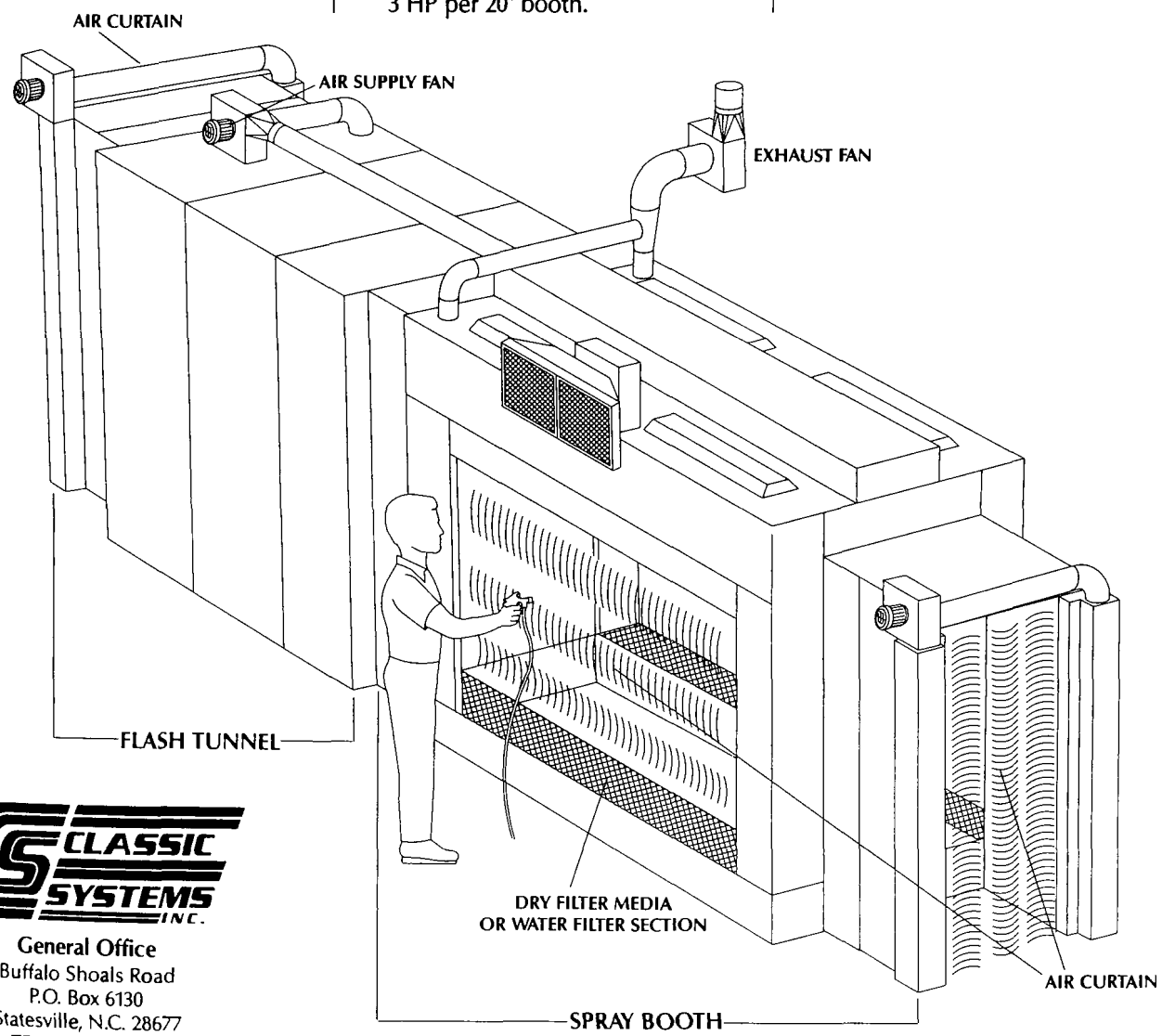

CLASSIC SYSTEMS INC.

General Office
Buffalo Shoals Road
P.O. Box 6130
Statesville, N.C. 28677
TEL: 800-362-5003
FAX: 704/878-2914

Introducing The All New

CAMBOOTH*

from Classic Systems, Inc.

CLASSIC SYSTEMS, INC.

Increased Efficiency In The Manufacturing Environment

Now in our fifteenth year, Classic Systems is a company dedicated to designing and building products which solve specific problems relating to materials handling, and to EPA and OSHA regulations.

We currently operate from 2 North Carolina locations with over 130 employees and annual sales of more than $10 million. We serve our customers nationwide with innovative solutions in the following categories:

- Dust Collection Systems
- Finishing Systems
- Fume Control
- Materials Handling

CLASSIC SYSTEMS INC.

The CAMBOOTH* utilizes a unique Air Curtain design and offers the following:

- Significantly Increased Efficiency
- Environmental Safety
- Higher Quality Coatings Applications

FOR USE AS A:

- Spray Booth
- Fume Control Device

*Patent Pending

GRACO COMMENTS REGARDING PROPOSED
CTG FOR THE WOOD INDUSTRY

Thank you for the opportunity to present our comments on the proposed CTG for the wood industry. In our presentation today, we will address the issue of transfer efficiency as it relates to the performance of the paint application device.

In reviewing the Draft Chapters 1 through 4 of the Control of Volatile Organic Compounds from Wood Finishing Coating Operations, we noted several references to a lack of a standard transfer efficiency test. Specifically, Pages 2--36 and 3--48.

Basically, transfer efficiency is the amount of paint that actually lands on a part, compared with the total amount of paint being sprayed from the gun.

Our goal is to maximize transfer efficiency and minimize the amount of paint used to paint a part. Higher transfer efficiency will result in lower paint usage, fewer solvent emissions, reduced exposure by plant personnel to solvent fumes, less sludge to dispose of, and less maintenance and less paint handling in general. This task is complicated by the demands of real world production.

The formula that expresses this relationship is as follows:

$T.E. = Wp/\%S \times Q \times T$

Where:

T.E.= Transfer efficiency

Wp= Weight of the paint solids deposited on parts after baking

%S= Percentage of the sprayed paint that is made up of solids

Q= Paint flow rate

T= Time of spray operation

At Graco, we have long recognized the need for a standardized method that would provide meaningful data to determine which application device would provide the most efficient means of applying paint to a customer's product. Our customers range from companies that paint huge metal structures such as aircraft and road graders to companies that paint considerably smaller objects like wood spindles for chairs.

In addition to part size, shape and substrate differences, some customers paint indoors and some paint outdoors. Some apply paint at a high delivery rate because they are painting product moving down a conveyor line while other paint stationary product in a paint booth. The painting environment varies greatly as well. Some customers have down draft paint booths with very sophisticated air movement controls; others have less than ideal conditions.

Given this wide array of equipment, Graco has

developed a test for determining the transfer efficiency of the paint application tool. We recognized early on that there were a number of factors which will have an affect on transfer efficiency.

Among them--

- Operator Spray Technique
- Fluid Delivery Rate
- Atomizing Air Pressure
- Target Size
- Type of Application Tool
- Condition of Application Tool
- Part Configuration
- Air Velocity in the Spray Booth
- Fluid Pressure
- Distance of the Spray Gun from the Target

There are also quality standards which vary from industry to industry and even from plant to plant within the same industry.

Given all of these factors, Graco designed a transfer efficiency test that attempted to eliminate as many variables as possible. By doing so, we felt that the tested performance of the application tool would be meaningful to our needs in product development and also our customers' requirements for the most

efficient application tool commensurate with their needs for speed and quality.

At this time, I would like to take this opportunity to describe that test procedure for you.

Graco uses a test method for determining the transfer efficiency of each type of application tool that we feel provides a reasonably accurate tranfer efficiency number for each application tool. Through this method, we have removed the variables of operator technique, air flow past the booth, part configuration and so forth. The test that we use calls for painting a group of ten 4 foot by 6 inch panels hung vertically on 12 inch centers that are wrapped with preweighted aluminum foil. The painting is performed by a test gun that has been preset to approximate the demands of a production environment. We trigger the gun six inches before the spray contacts the first panel and release the trigger once the last panel has moved six inches beyond the gun. By doing so, we can accurately determine the amount of paint dispensed through the gun and compare that to the amount of paint by weight that ended up on the panels. We determine the weight of the paint on the panels by weighing the panels before and after spraying and noting the difference.

By using this method we are able to provide a realistic transfer efficiency figure that one could reasonably expect from each method of spray finishing. By using the same test criteria, here is how the various spray technologies performed.

Air Spray	*30%*
HVLP Air Spray	*40%*
HVLP Air Assisted Airless Spray	*45%*
Electrostatic Air Spray (65kv)	*65%*
Electrostatic Air Assisted Airless Spray	*70%*
Electrostatic Air Spray (85kv)	*75%*

I would like to point out that this method shows that electrostatic guns are the only finishing tools that achieve transfer efficiencies of more than 50%.

Due to the recent enactment of air quality equipment rules that prescribe compliant types of finishing equipment, many of you have probably heard of another spray technology, commonly referred to as "HVLP". The term *HVLP* stands for High Volume Low Pressure spray. As its name suggests, *High Volume Low Pressure* spray uses large volumes of air under reduced pressure (typically 10 psi or less) to atomize coatings. Because the atomized paint is propelled from the HVLP gun at a lower velocity, there is a reduced chance of overspray.

Today, there are two forms of HVLP atomization. These are HVLP air spray and HVLP air assisted airless spray. HVLP air spray uses large volumes of air at low pressure to atomize coatings, while HVLP air assisted airless spray uses fluid pressure to atomize coatings and reduced air pressure to

sculpt the fan pattern of the atomized spray.

Claims of extremely high transfer efficiency have been made for HVLP. However, as I have tried to make clear, tests can be designed to provide a high transfer efficiency value. HVLP can generally provide finishers with higher transfer efficiency than conventional air spray systems. And at its best, HVLP will generally exceed the transfer efficiency of air spray and approach the transfer efficiency of air assisted airless spray while providing a high quality finish.

But it is important to remember that HVLP air spray operates at generally lower fluid flow rates than other spray finishing methods. The lower atomizing pressures of HVLP means that you may be forced to reduce your fluid flow rate to maintain finish quality. At these lower atomizing air pressures, there may simply not be enough air atomizing pressure to keep up.

On the other hand, HVLP air assisted airless spray operates at fluid flow rates similar to conventional air assisted airless spray and therefore lends itself to higher production environments.

But please remember, the test method I have described is designed to test relative performance levels. However, we can say that this test method has been shown to be very useful both to us and to end-users. These findings have also been corroborated by anecdotal evidence.

We know of a furniture finishing operation that was able to achieve a 40% materials savings when they switched from

conventional air spray to HVLP.

But as we have already noted, in the real world, spray finishing conditions are much more complex.

In addition, the industrial finishing line is governed by two overriding concerns--*finish quality* and *productivity*. The finished appearance of the product being painted is essential to its success in the marketplace.

The need to produce as many finished parts as possible in as short a time as possible is also essential to keeping production costs down. These two factors will determine the selection of finishing tools and the way they are used on the finishing line.

We believe that transfer efficient application tools will reduce the amount of paint used to finish a part. This reduction will result in fewer VOC emissions released into the environment which in turn will benefit overall air quality. The key issue in identifying such transfer efficient tools is the standardized test method by which we will select them.

Mobay's Role in the Wood Furniture Coating Industry

Mobay

- Mobay is the leading North American supplier of aliphatic and aromatic polyisocyanate resins for use in polyurethane coatings for wood
- Mobay is also the leading North American supplier of non-air inhibited unsaturated polyesters for use in polyester coatings for wood
- Mobay sells resins to wood coating manufacturers
- Mobay seeks to act as a technical partner to the wood furniture coating industry

Presentation to U. S. Environmental Protection Agency, November 19–21, 1991

Mobay's Role as a Raw Material Supplier

Mobay

- To define the status of our technology with respect to VOC compliance
- Enable us to demonstrate technology developments and feasibility by working with furniture manufacturers and coatings manufacturers

Current Status of 2-Component Solvent-Borne Polyurethane Coatings for Wood Furniture

Mobay

Commercially Available System	VOC (lbs/gal)
Clear Top Coats	4.6–5.5

Benefits

- Up to a 23% VOC reduction from nitrocellulose coatings (approximately 6.0 lbs/gal to 4.6 lbs/gal)
- Greatly improved performance properties (e.g. alcohol resistance/ mar resistance)
- High film build resulting in the reduced number of coating applications
- Currently being used in production

Present Limitations

- May require adjustments to existing production operation and different equipment for safe or cost efficient use in some wood coating operations
- May require a degree of wood coatings user training/adjustment in operating procedure for their proper use
- Deviation from existing repairability procedures

Presentation to U. S. Environmental Protection Agency, November 19–21, 1991

Current Status of Non-air Inhibited Unsaturated Polyesters for use in Polyester Coatings for Wood

Mobay

Commercially Available System	Contains	VOC (lbs/gal.)
Air Dry Clear Top Coats/Sealer	monomer	1.5
Developmental Systems		
Air Dry Clear Top Coats/Sealer	solvent	3.6**
UV-Curable Top Coat	monomer	0.7**
UV-Curable Sanding Sealer	monomer	0.7**
UV-Curable Top Coat	water/ SOLVENT	0.2**,*
UV-Curable Sealer	water/ SOLVENT	0.2**,*

**VOC value is less water*

*** VOC Values are for developmental coatings formulations and might be adjusted higher to suite production needs*

Presentation to U. S. Environmental Protection Agency, November 19–21, 1991

Current Status of Non-air Inhibited Unsaturated Polyesters for use in Polyester Coatings for Wood (Contd.)

Mobay

Benefits

- 40–75% VOC reduction for Air Dry unsaturated polyesters as compared to nitrocellulose (i.e. NC @ 6.0 lbs/gal)
- 88–97% VOC reduction for UV-Cure unsaturated polyesters as compared to nitrocellulose (i.e. NC @ 6.0 lbs/gal)
- Greatly improved performance properties (e.g. alcohol resistance/mar resistance)
- High film build resulting in the reduced number of coating applications
- Two alternative curing methods

Present Limitations

- May require a degree of wood coating user training/adjustment in operating procedure for their proper use.
- May require additional or different equipment for safe or cost efficient use in wood coatings operations.

Mobay Supports

Mobay

- The reduction of VOC by use of 2-Component Polyurethanes and Non-Air Inhibited Unsaturated Polyesters
- The need for continued cooperation by the EPA with coatings raw materials suppliers, coatings manufacturers, and wood coatings users
  - In allowing VOC compliant products to be optimized through continued development
  - To allow market acceptance of products based on economic benefit, property performance, as well as VOC reduction.

Presentation to U. S. Environmental Protection Agency, November 19–21, 1991

Goals of Mobay Development

Mobay

- Environmentally responsible coatings systems
- High performance coatings

Future Developments in Wood Coatings

Mobay

VOC reduction down to 0.9* lbs/gal via 2-Component water-borne polyurethane topcoats and sealers

Potential Benefits

- 85% reduction in VOC from nitrocellulose coatings
- High performance of a 2-Component solvent- borne polyurethane
- Clarity of finish
- Higher film build

** VOC value is less water*

Present Limitations

- No large scale production at this point
- Commercial availability in 1–2 years
- Technology would require:
  - cooperative development with and the approval of wood coatings manufacturer
  - acceptance of furniture coatings users

Mobay Supports

Mobay

The cooperative efforts between the Joint Industry Steering Committee (JISC), the paint and coatings industry and the EPA by offering raw materials and technology that will reduce VOC levels and greatly improve the performance properties of wood furniture coatings and provide off-setting cost benefits during the application process

n/e/r/a
National Economic Research Associates, Inc.
Consulting Economists

101 California Street
San Francisco, California 94111
(415) 291-1000
Facsimile (415) 291-1020

ECONOMIC IMPACTS OF VOC EMISSIONS CONTROL ON THE FURNITURE AND CABINET INDUSTRIES

PRELIMINARY FINDINGS

Presented to:

National Air Pollution Control
Techniques Advisory Committee

Presented by:

Mark P. Berkman
Senior Consultant
National Economic Research Associates

On Behalf of:

American Furniture Manufacturers Association
Business and Institutional Furniture Manufacturers Association
Kitchen Cabinet Manufacturers Association
National Paint and Coatings Manufacturers Association

November 21, 1991
Durham, North Carolina

PROJECTED TOTAL ANNUAL COST TO THE WOOD FURNITURE AND CABINET INDUSTRY OF REDUCING VOC EMISSIONS

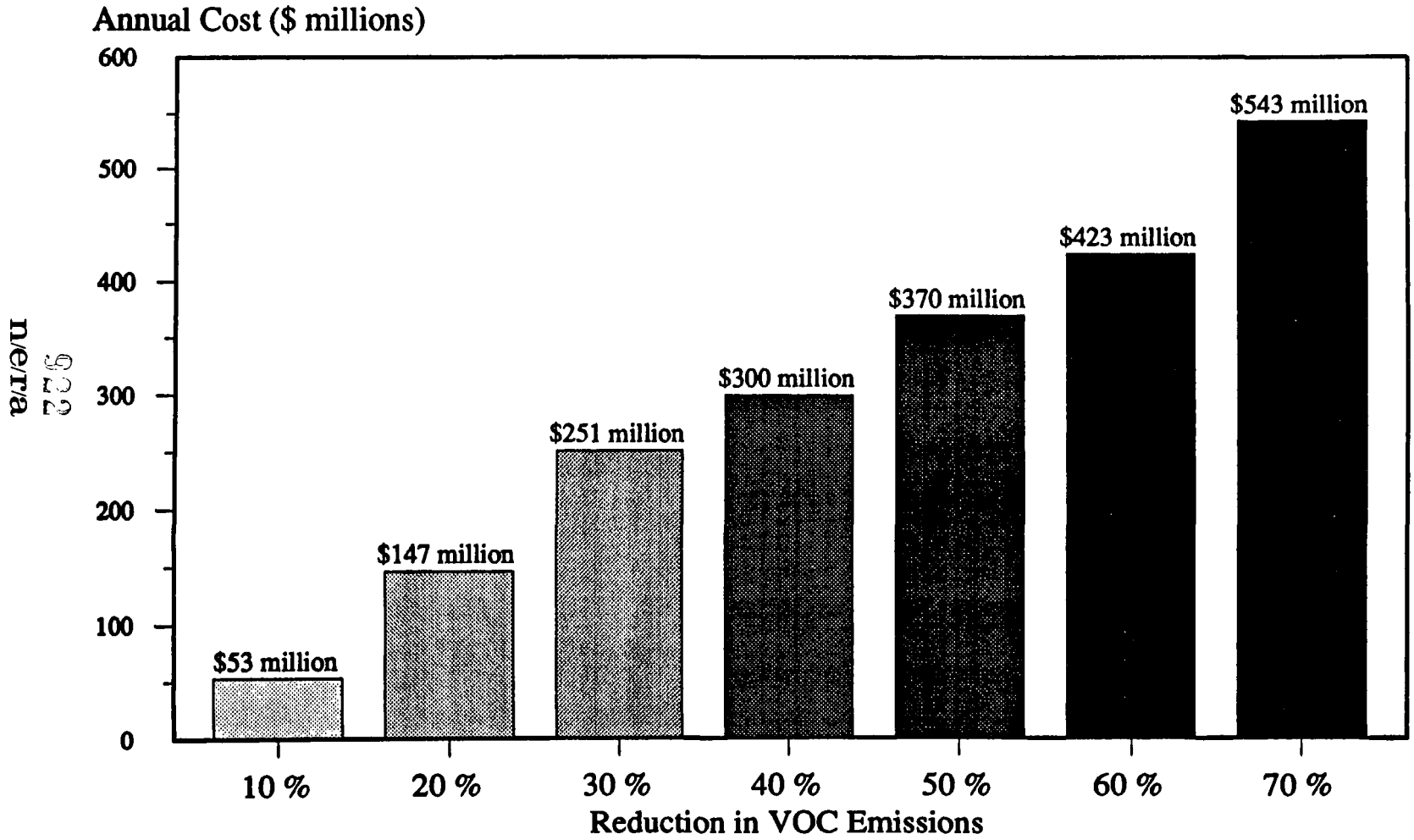

n/era
226

PROJECTED PLANT CLOSURES
IN THE WOOD FURNITURE AND CABINET INDUSTRY
RESULTING FROM THE COSTS OF VOC CONTROL TECHNOLOGY

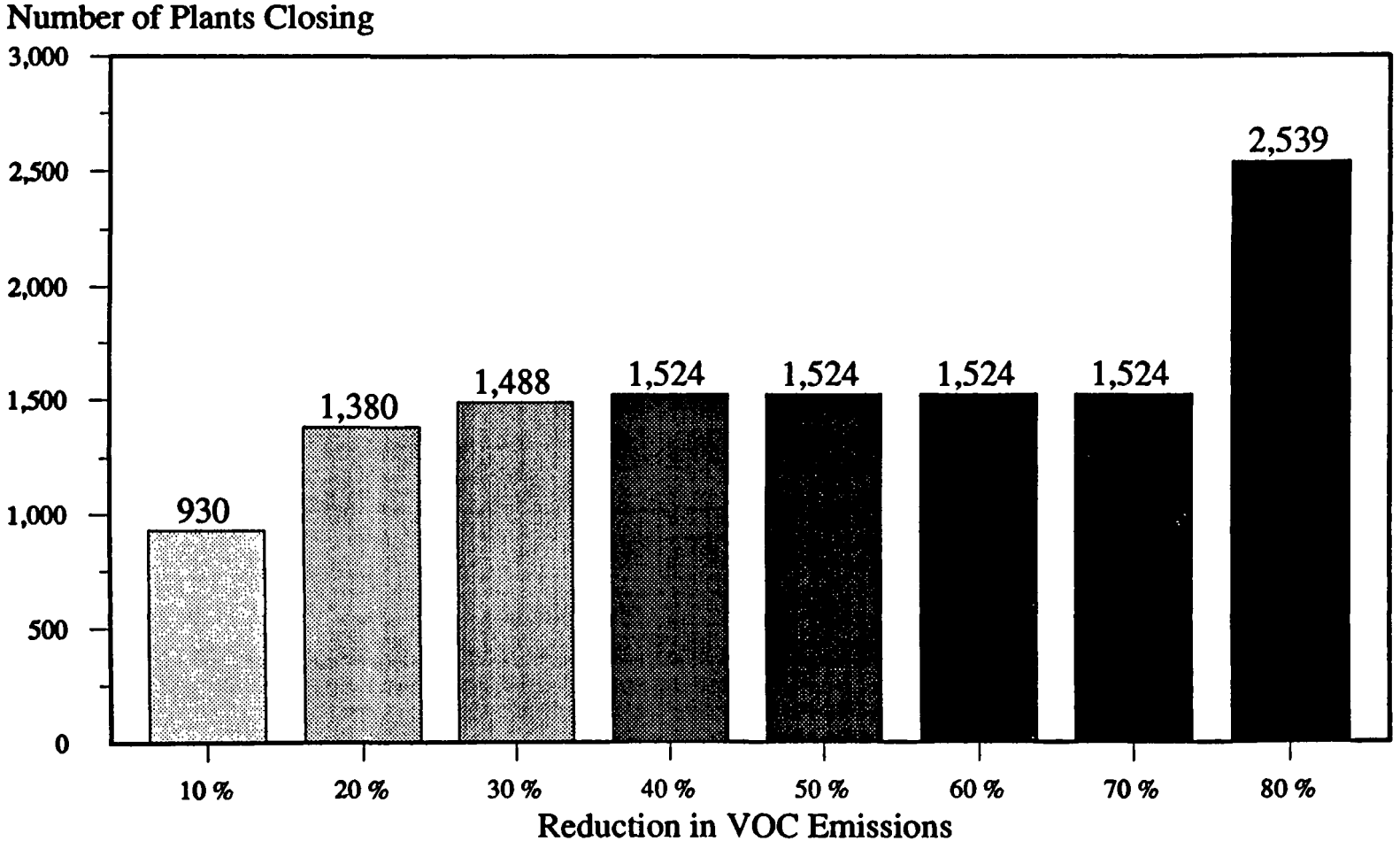

n/era

PROJECTED EMPLOYMENT LOSSES
IN THE WOOD FURNITURE AND CABINET INDUSTRY RESULTING FROM THE COSTS OF VOC CONTROL TECHNOLOGY

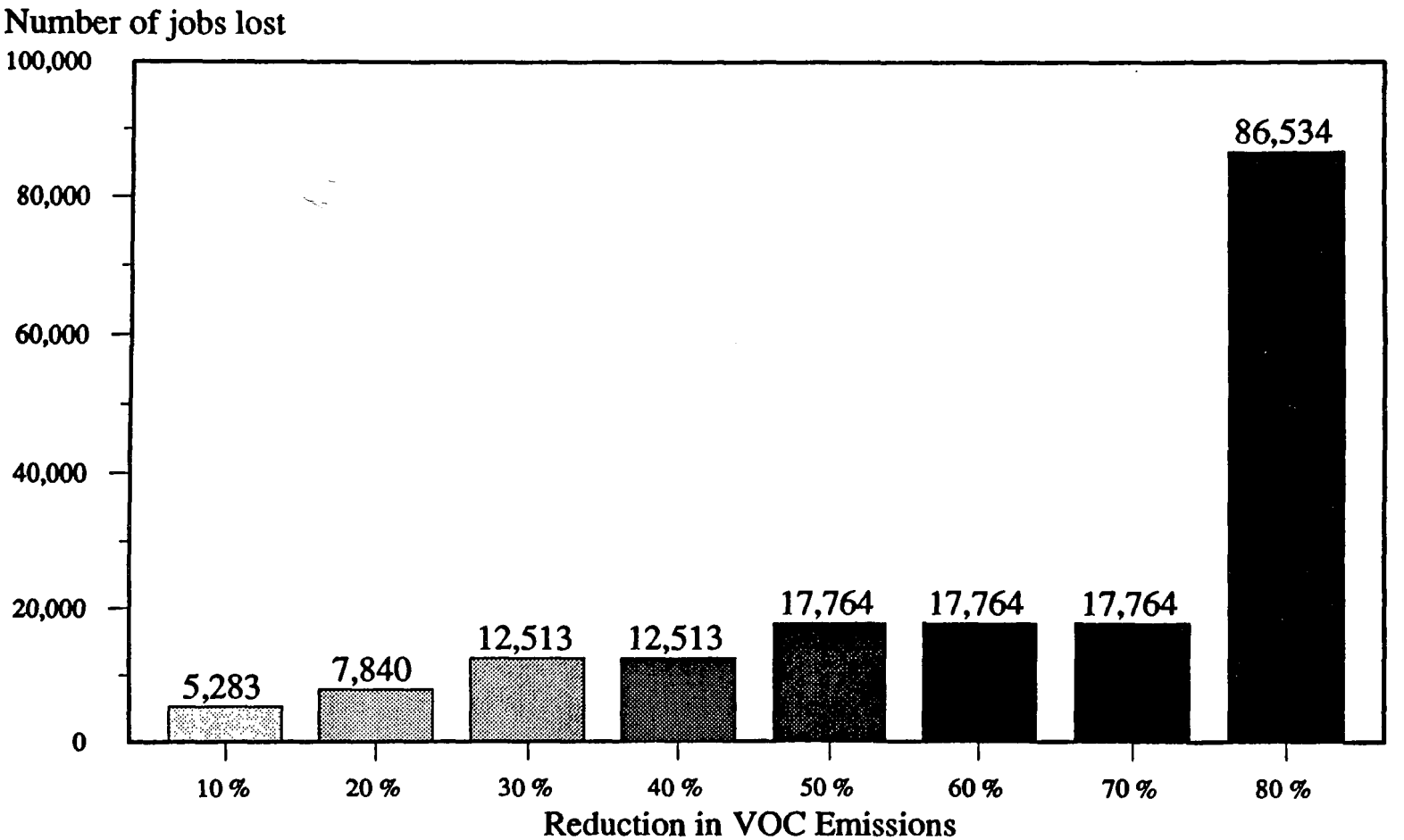

n/e/r/a

Estimated Cost-Effectiveness of VOC Emission Control Methods in 1994 in Nonattainment Cities

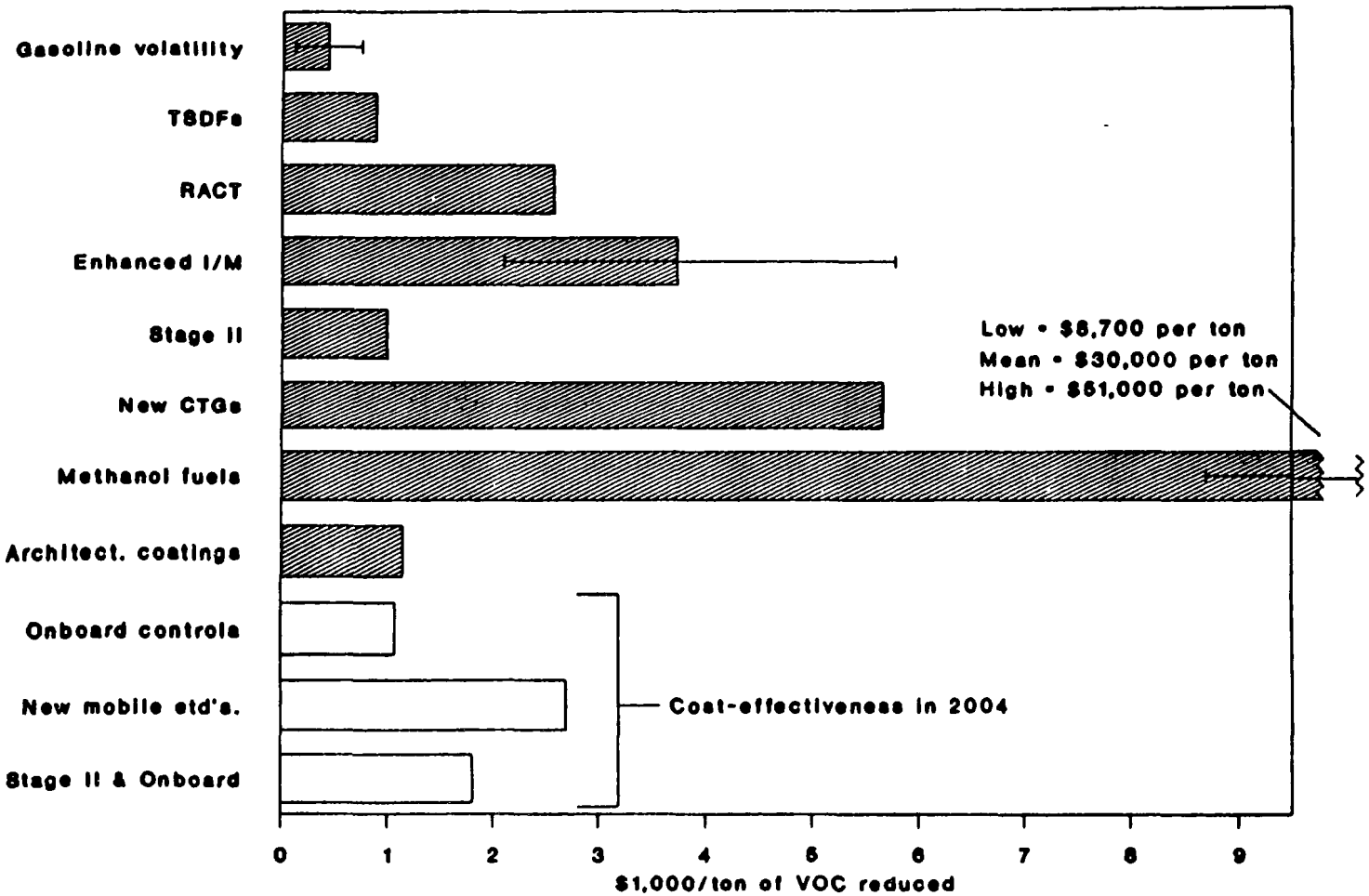

The cost-effectiveness of enhanced inspection and maintenance (I/M) programs and new mobile standards include only the cost of VOC control. Since Onboard controls and new mobile standards do not take affect until after 1994, we present the cost-effectiveness in 2004. The thick horizontal bars represent the average cost-effectiveness in nonattainment cities. The thin horizontal lines for gasoline volatility, methanol fuels, and I/M programs represent ranges of uncertainty associated with assumptions we used to estimate total annual costs. The very large uncertainty associated with the methanol fuels is due to the uncertainty of methanol prices relative to gasoline prices. We were unable to estimate cost-effectiveness uncertainty for other control methods. See figure 7 for a description of control methods.

SOURCE: Office of Technology Assessment, 1989.

Catching Our Breath — Next Steps for Reducing Urban Ozone, Congress of the United States/Office of Technology Assessment, July 1989, Page 17

n/ra

WOOD FURNITURE AND FIXTURES MANUFACTURERS ACCOUNT FOR LESS THAN ONE PERCENT OF TOTAL VOC EMISSIONS

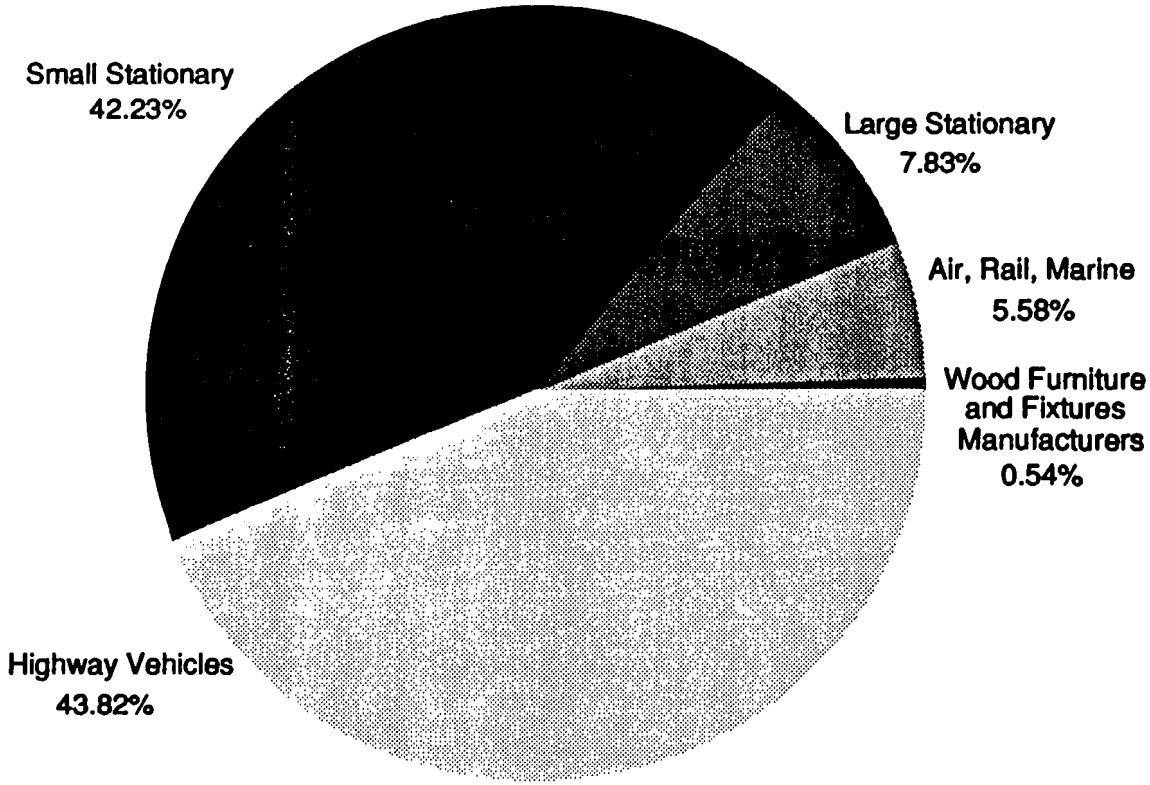

Emission from Wood Furniture and Fixtures Manufacturers were subtracted from Large Stationary.

Source: Derived from "Catching Our Breath: Steps for Reducing Urban Ozone," U.S. Congress, Office of Technology Assessment, 1989.

LOWEST ANNUAL COST OF ATTAINING A 30 PERCENT REDUCTION IN VOC EMISSIONS FOR DIFFERENT WOOD FURNITURE AND CABINET PLANT TYPES

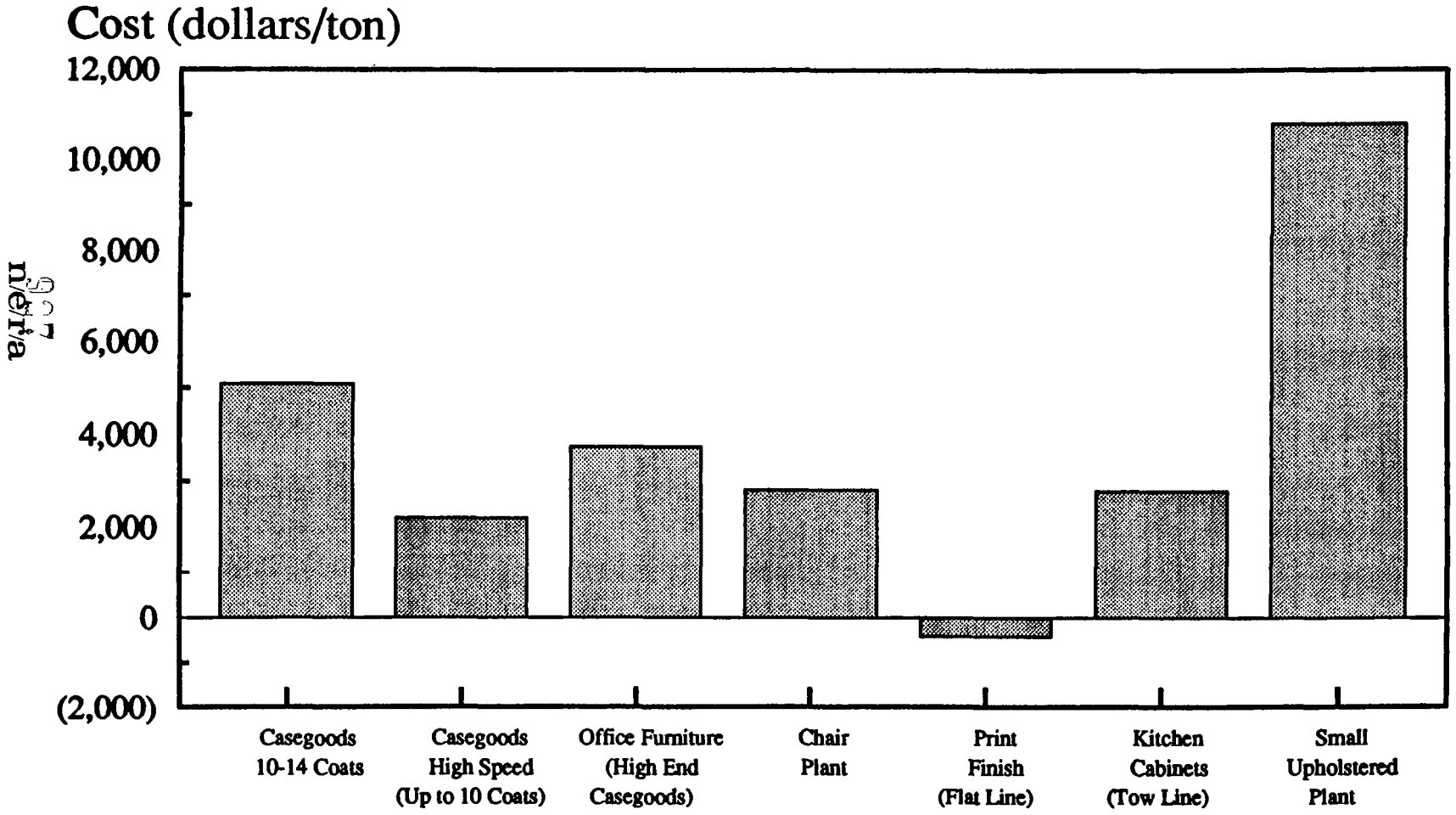

THE EFFECT OF VOC CONTROL TECHNOLOGY ON PROFITS

MODEL PLANT 3 (HOUSEHOLD FURNITURE: 19 COAT STEPS; $27.0 MILLION)

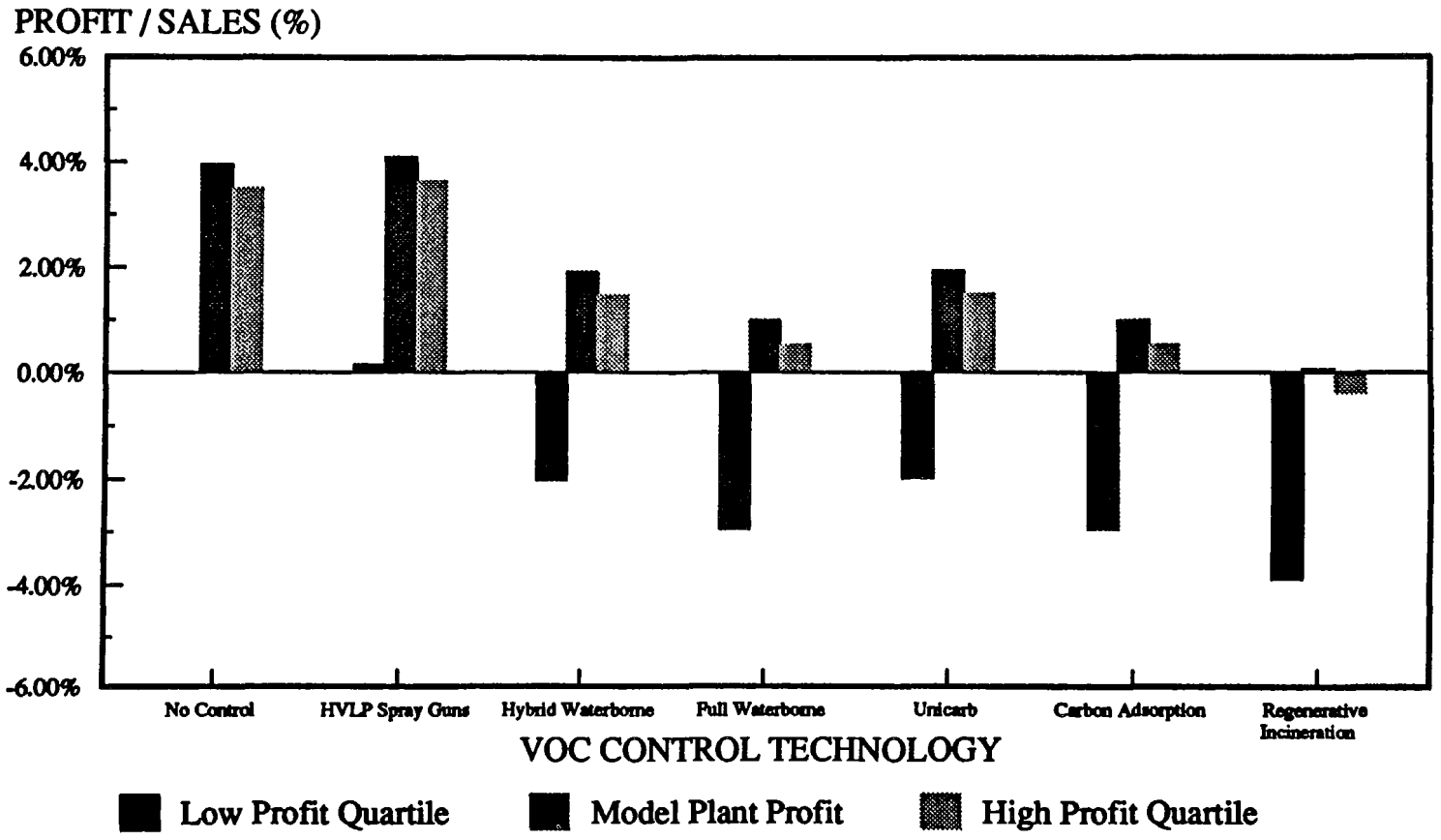

THE EFFECT OF VOC CONTROL TECHNOLOGY ON PROFITS
MODEL PLANT FOUR (OFFICE CASEGOODS: 15 COATING STEPS; SALES $11.0 MILLION)

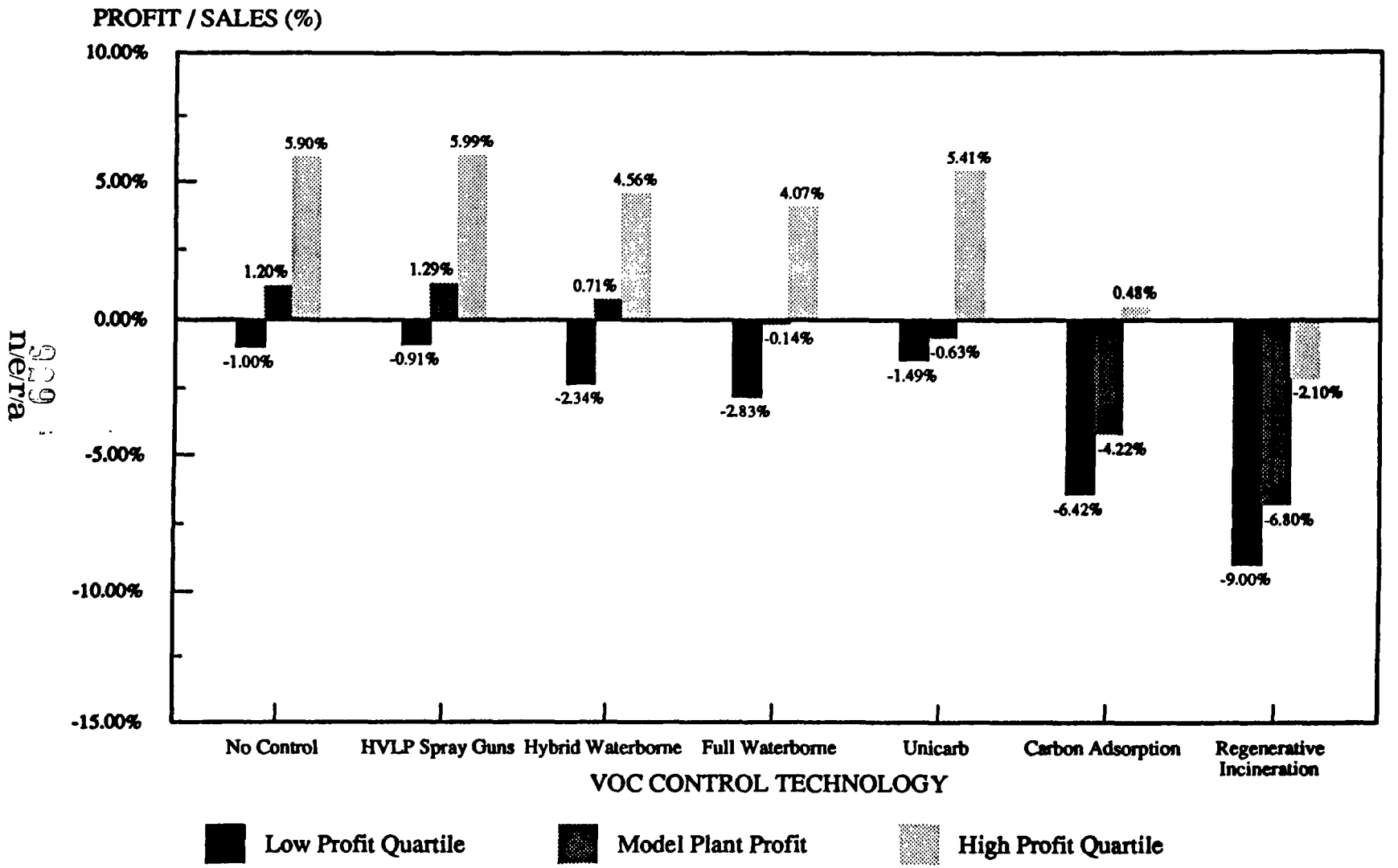

n/era 6309

THE EFFECT OF VOC CONTROL TECHNOLOGY ON PROFITS
MODEL PLANT EIGHT (KITCHEN CABINETS: 4 COATING STEPS; SALES $13.4 MILLION)

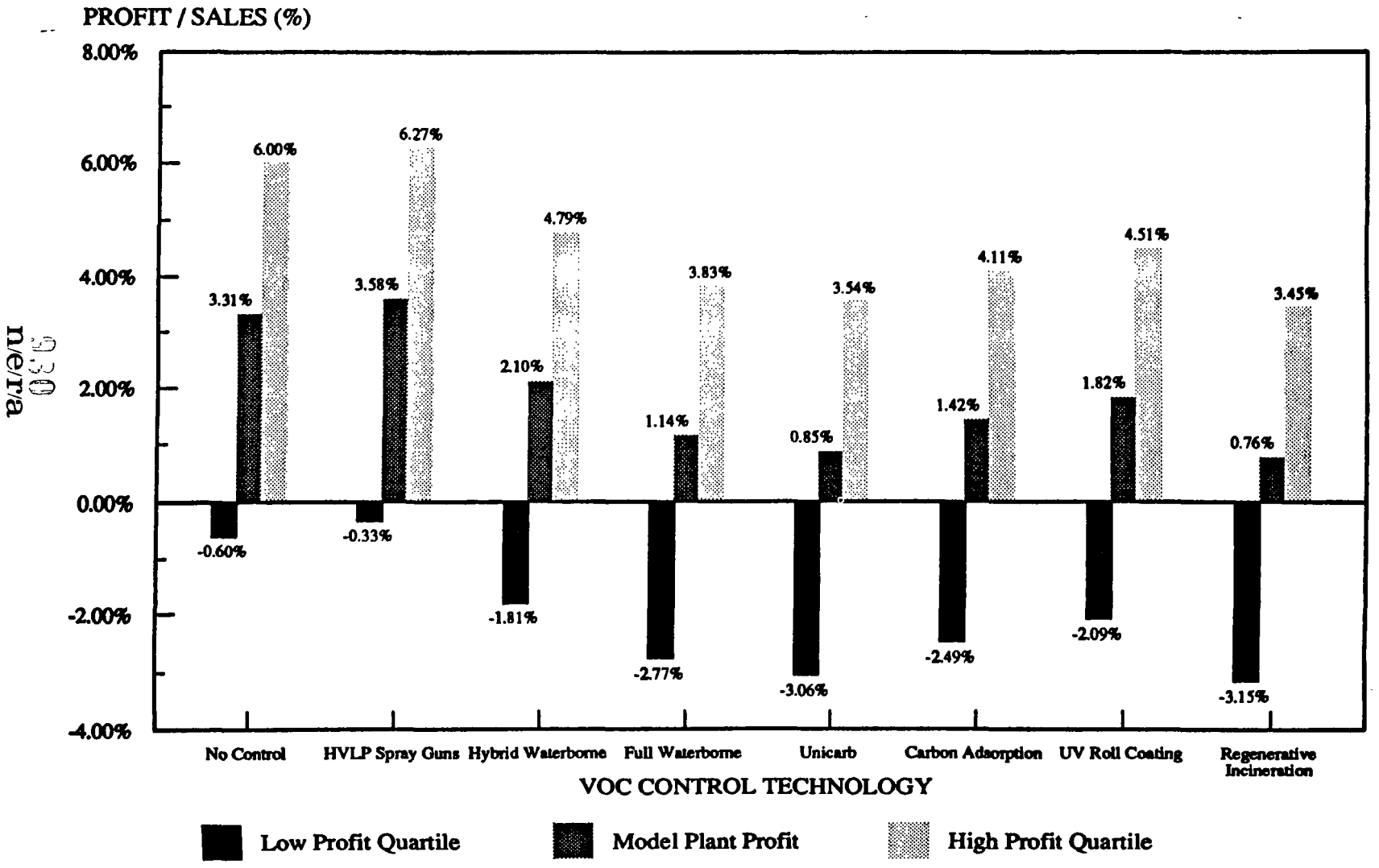

n/era

Annual Failure Rates per 10,000 Concerns

(Enterprises listed in Dun & Bradstreet Census of American Business)

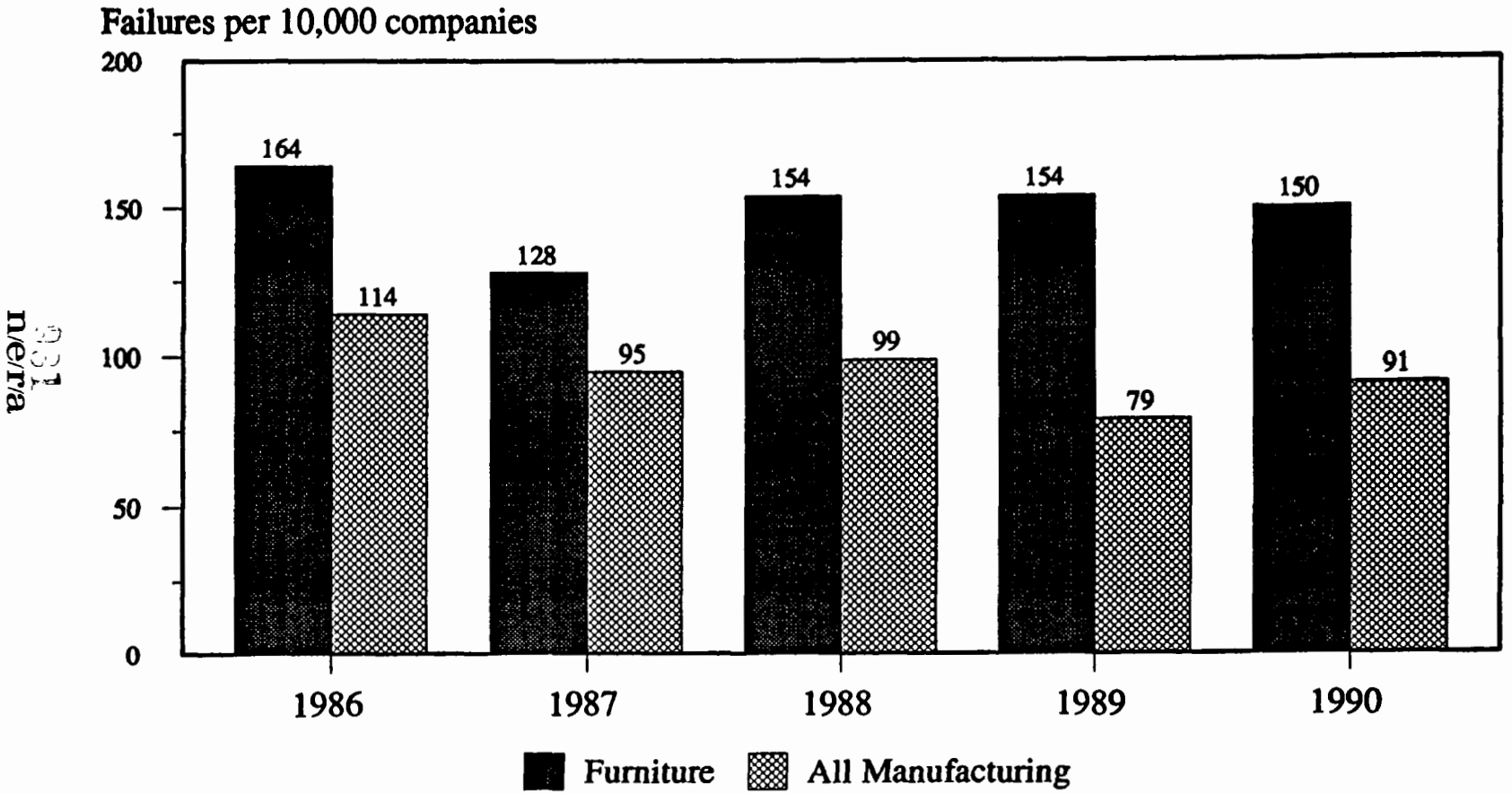

Source: Business Failure Record, 1986-1990
Dun & Bradstreet Corporation

U.S. HOUSEHOLD FURNITURE INDUSTRY (SIC 251)
DOLLAR VOLUMES OF FOREIGN IMPORTS AND U.S. EXPORTS
1981-1990

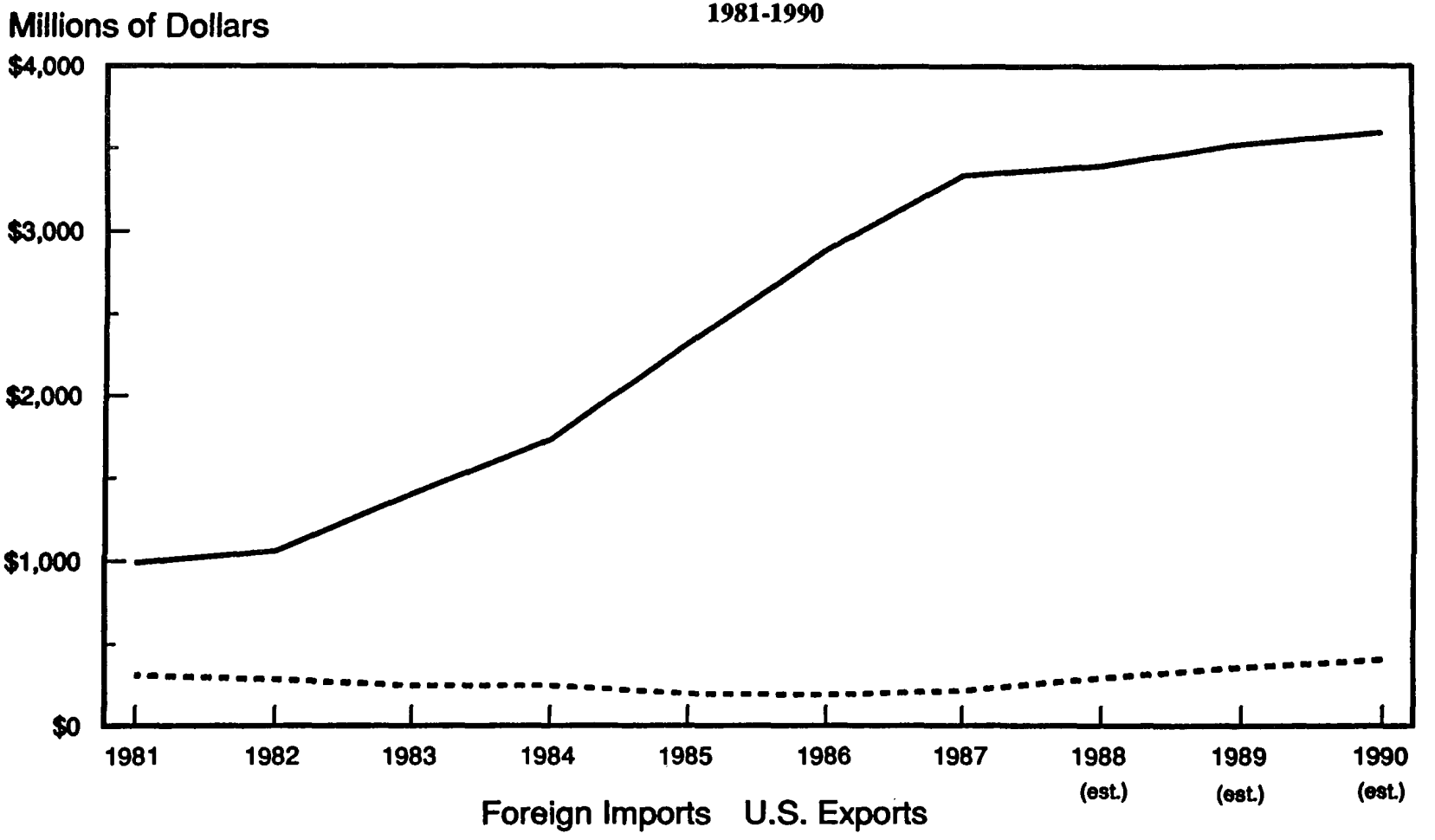

Source: U.S. Census Data as reported in "The U.S. Household Furniture Industry," Economic Industry Reports, Inc., 1990.

n/ra 335

PROJECTED PLANT CLOSINGS
BY PLANT SIZE AND VOC REDUCTION LEVEL

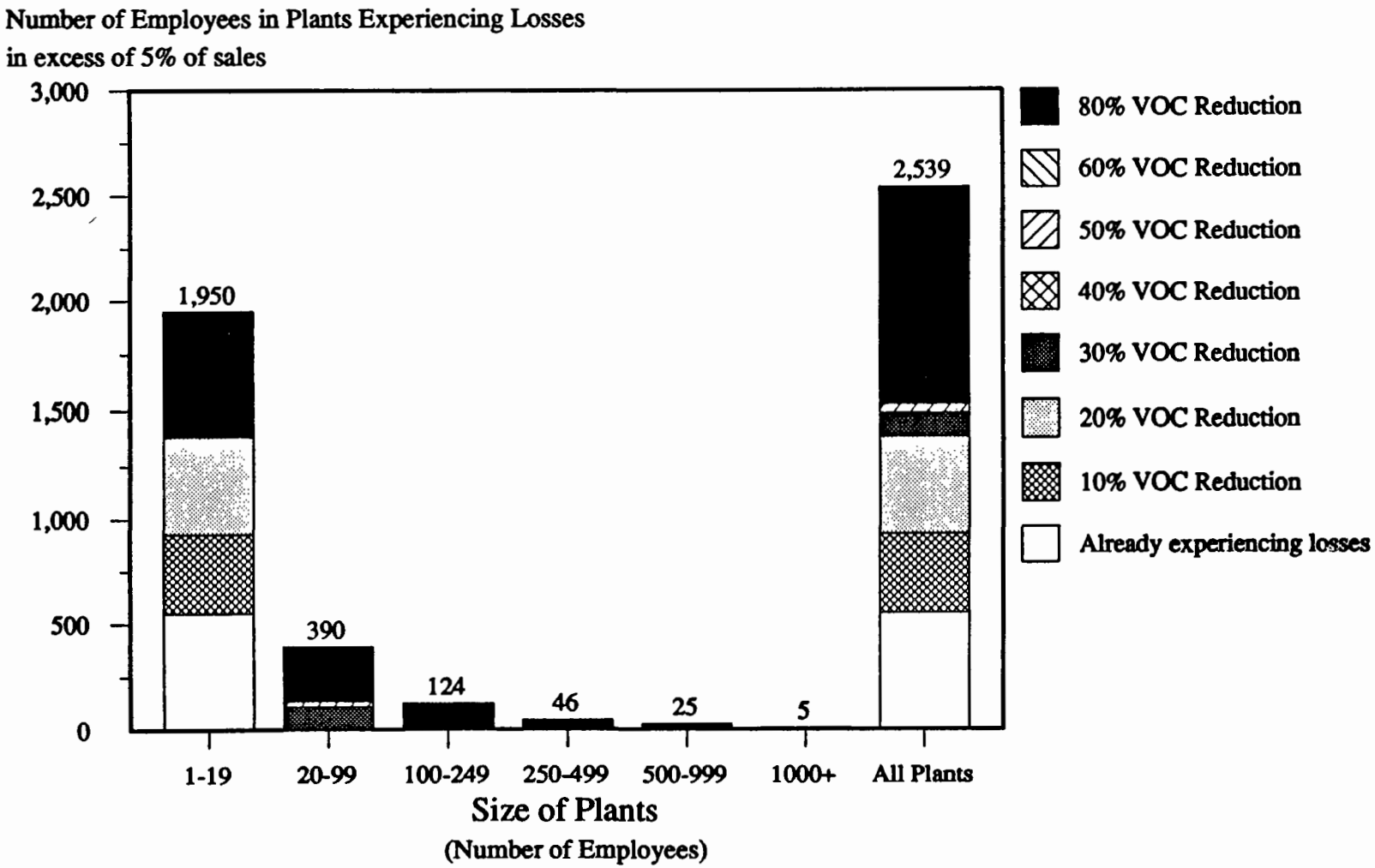

ne/ra
903

PROJECTED EMPLOYMENT LOSSES BY BY PLANT SIZE AND VOC REDUCTION LEVEL

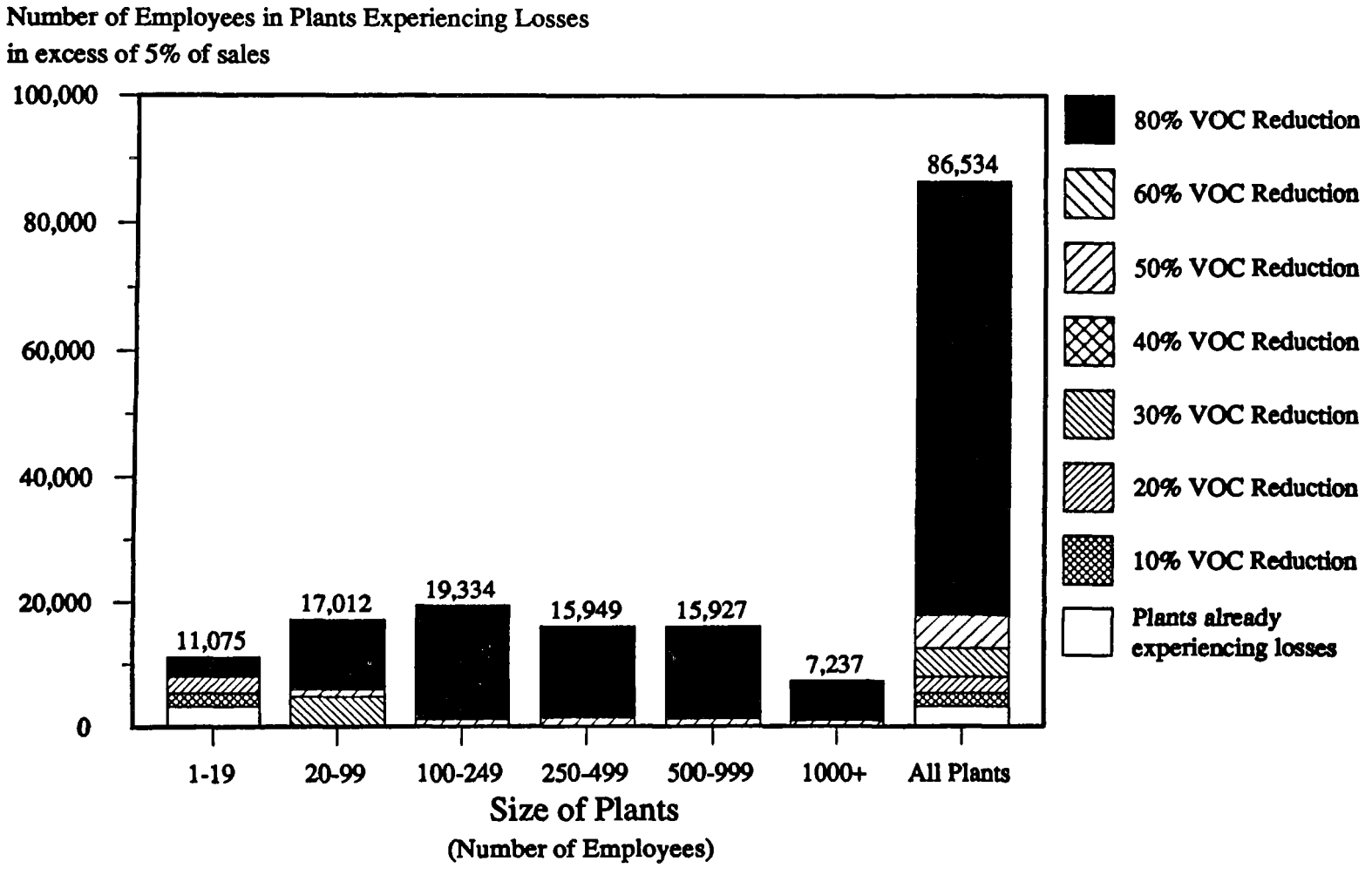

n/e/r/a

POLICY IMPLICATIONS

- A MARKET-BASED VOC REDUCTION APPROACH SHOULD BE CONSIDERED AS A SUBSTITUTE FOR OR IN CONJUNCTION WITH RACT FOR SEVERAL REASONS:

  1. THE WIDE VARIATION IN CONTROL COSTS AND FINANCIAL IMPACTS WITHIN THE INDUSTRY PROVIDES AN OPPORTUNITY TO ACHIEVE SIZEABLE REDUCTIONS AND AVOID ADVERSE ECONOMIC CONSEQUENCES THROUGH EMISSIONS TRADING

  2. THE AVAILABILITY OF LOWER COST REDUCTIONS FROM OTHER SOURCES PROVIDES AN OPPORTUNITY TO LOWER THE OVERALL COSTS OF VOC REDUCTIONS

- AT A MINIMUM, THE RACT FOR THE FURNITURE INDUSTRY SHOULD ACCOUNT FOR THE RELATIVE COSTS AND CONTRIBUTIONS OF THE INDUSTRY TO THE GOAL OF VOC REDUCTION

Wood Furniture and Kitchen Cabinet Industry Volatile Organic Compound Control Technology Study

Mission Statement

The mission of the Joint Industries Steering Committee is to participate in the federal Wood Furniture CTG development process in order to achieve guidelines that:

- Enhance and improve the environment of the United States and the world;
- Are technically feasible;
- Are economically justifiable;
- Do not restrict the future growth and development of the United States Wood Furniture and Kitchen Cabinet Industries

Joint Industry Steering Committee Members

- American Furniture Manufacturers Association (AFMA)
- National Paint & Coatings Association (NPCA)
- Kitchen Cabinet Manufacturers Association (KCMA)
- Business and Institutional Furniture Manufacturer's Association (BIFMA)

Industry Characterization

- Detailed Survey of 160 Industry Facilities
  - Provided Industry-wide Technical and Economic Data
  - Used as Basis for Development of Model Plants
- Facility Technology Demonstrations and Site Visits
  - Visited 24 Facilities
  - Provided On-Site Observations and Analyses of Technologies

ENSR

Industry Characterization (cont.)

- Industry Experts
  - Provided confirmation/refinement to model plant characterizations
  - Collective Knowledge of Actual Conditions at Hundreds of Facilities

ENSR

Development of Representative Model Plants

- Defined 12 Model Plants to Cover Industry Characteristics
- Grouped Survey Responses into the 12 Model Plant Categories for Characterization
- Augmented Survey Data with Site Visits and Industry Expertise

JISC Model Plants

Considerations:

- Industry Complexity Does Not Lend Itself to Simple Characterization
- Complex Finishing Systems Driven by Consumer Demand for Product Quality and Aesthetics
- Many Coatings with Varying VOC/Solids Contents
- Multiple Substrates with Differing Properties

JISC Model Plants (cont.)

- Heat and Water Sensitive Substrates
- Coatings Sensitive to Variations in Temperature and Humidity
- Multiple VOC Emission Points
- Varying Price Points of Goods Produced

Model Plants -- Key Parameters

- Finishing Schedule (No. of Coats and Type)
- Type of Wood Substrate, Production Line, and Product Produced
- Annual Usage of Each Coating
- Number/Flow Rate of Spray Booths and Drying Ovens

Model Plants -- Key Parameters (cont.)

- Production Rates/Line Speeds
- Annual VOC Emissions
- Number of Employees
- Number and Type of Spray Guns/Roll Coaters
- Number of Pumps
- Coating Storage Method

Control Technologies Evaluated

- Recuperative Thermal Incineration
- Regenerative Thermal Incineration
- Fixed Bed Catalytic Incineration
- Fluidized Bed Catalytic Incineration
- Carbon Adsorption
- Carbon Adsorption/Incineration
- Full Waterborne Coating System
- Hybrid Waterborne Coating System

Control Technologies Evaluated (cont.)

- UV Curable Coatings
- UNICARB® System
- HVLP Spray Guns
- Terr-Aqua UV/AO
- Sunkiss Ovens
- Mobile Zone Spray Booths
- Recirculating Spray Booths
- Air Curtain Spray Booths

Engineering Limitations for Certain Control Technologies

- Reduced Flow by Air Recirculation
  - Not Generally Applicable to All Segments of the Industry
  - Limited Actual Use in Industry Facilities
  - OSHA and Insurance Considerations
- Reduced Flow by Air Curtain
  - Developing Technology, not Commercially Available
  - OSHA and Insurance Considerations

Engineering Limitations for Certain Control Technologies (cont.)

- Full Waterborne Technology for Long Finishing Sequences
  - Technical Problems in Meeting Quality Specifications
  - Not Commercially Demonstrated for These Types of Finishes
- UNICARB® for High Speed Lines and Stains
  - Technical Problems in Delivering Sufficient Coating Volumes
  - Slower Evaporating Solvents Require Longer Drying Time
  - Commercially Available for Topcoats and Sealers Only

ENSR

Engineering Limitations for Certain Control Technologies (cont.)

- Mobile Zone Spray Booths
  - Developing Technology, not Commercially Available
- Terr-Aqua UV/AO Oxidation
  - Developing Technology, Requires Further Study
- Sunkiss Ovens
  - Does Not Achieve Sufficient VOC Reduction to be Considered a Control Technology

Control Technology Evaluation

Determined Capital and Annual Costs for Potentially Feasible Controls

- Add-On Emission Controls
  - Catalytic Incineration (fixed bed and fluidized bed)
  - Thermal Incineration (recuperative and regenerative)
  - Carbon Adsorption
  - Carbon Adsorption/Incineration
- Application Methods (Transfer Efficiency)
  - HVLP Spray System (slower lines)
  - Roll Coating
  - UNICARB® (slower lines)

Control Technology Evaluation (cont.)

- Reformulation
  - Hybrid Waterborne Systems
  - Full Waterborne Systems
  - UNICARB® Finishes
  - UV Cured Finishes

ENSR

Potential Mass VOC Reductions Available (Plant-Wide)

Control Technology	Industry as Whole
Spray Techniques:	
HVLP	2-15%
UNICARB®	8-33%
Reformulation:	
Hybrid Waterborne	28-61%
Full Waterborne	60-75%
UV Cured	42-80%
Add-On Controls:	
Incineration	3-86%
Carbon Adsorption	3-86%
Carbon Adsorption/Incineration	3-79%

Problems with Add-On Control Equipment

- High Capital/Operating Costs
- High Energy Demand
- Secondary Environmental Impacts
- Skilled Labor to Operate Equipment
- Gas Pretreatment Required
- OSHA, Safety and Insurance Considerations

Problems with Waterborne Coatings

- Production Line Color Control with Waterborne Stains
- Sags and Film Thickness on Vertical Surfaces
- Repairability
- Ease of Application/Drying Time
- Sensitivity to Temperature/Humidity Changes
- Print Resistance
- Rubbing Characteristics (Layering)
- Appearance (Clarity/Color)

ENSR

Problems with UNICARB®/UV

UNICARB®:

- Developing Technology
- Available Only for Sealer/Topcoat
- Restricted to Slower Line Speeds

UV:

- Applicable to Limited Industry Segments
- Casegoods Technology Still Under Development
- Difficult to Repair

ENSR

Costs of Alternative Controls

- Evaluated 11 Control Technologies for the 12 Model Plants
- Developed Capital Costs, Annual Costs, Cost Effectiveness Following OAQPS Guidelines

ENSR

Capital Costs of Alternative Controls

Control Technology	Industry as Whole
Spray Techniques:	
HVLP	$400/HVLP Gun
UNICARB®	$75,000 - $210,000
Reformulation:	
Hybrid Waterborne	$165,000 - $1,005,000
Full Waterborne	$286,000 - $1,030,000
UV Cured	$98,000 - $1,005,000
Add-On Controls:	
Incineration	$163,000 - $1,026,000/booth
Carbon Adsorption	$312,000 - $673,000/booth
Carbon Adsorption/Incineration	$419,000 - $885,000/booth

Annual Operating Costs of Alternative Controls

Control Technology	Industry as Whole
Spray Techniques (Negative Numbers Indicate Cost Savings):	
HVLP	($51,000) - $2,000
UNICARB®	$25,000 - $470,000
Reformulation:	
Hybrid Waterborne	($163,000) - $547,000
Full Waterborne	($166,000) - $300,000
UV Cured	$95,000 - $1,222,000
Add-On Controls:	
Incineration	$103,000 - $321,000/booth
Carbon Adsorption	$68,000 - $170,000/booth
Carbon Adsorption/Incineration	$106,000 - $223,000/booth

ENSR

Cost Effectiveness of Alternative Controls

Control Technology	Industry as Whole
Spray Techniques (Negative Numbers Indicate Cost Savings):	
HVLP	($2,100) - $1,800/ton
UNICARB®	$2,100 - $9,400/ton
Reformulation:	
Hybrid Waterborne	($500) - $11,500/ton
Full Waterborne	($400) - $8,600/ton
UV Cured	$800 - $15,800/ton
Add-On Controls:	
Incineration	$1,500 - $87,300/ton
Carbon Adsorption	$1,300 - $44,100/ton
Carbon Adsorption/Incineration	$1,400 - $63,500/ton

Additional Issues

- Units of VOC Limits
- Multiple Levels for Various Industry Segments
- Phased Implementation of Developing Technologies

ENSR

Technical-Economic Analysis Interface

ENSR

Technical Feasbility

- Evaluate Controls
- Evaluate Capital and Annual Operating Costs

→

NERA

Economic Feasibility

- Identify Least Cost Controls
- Estimate Financial and Employment Impacts at Plant and Industry Level

Thomasville

November 8, 1991

Mr. Bruce C. Jordan
Director, Emission Standards Division (MD-13)
Office of Air Quality Planning and Standards
U.S. Environmental Protection Agency
Research Triangle Park, N.C. 27711

Dear Mr. Jordan:

Subject: Comments on Draft Chapters 1-4 of the Control Technique Guidelines (CTG) for Control of Volatile Organic Compound Emissions from Wood Furniture Coating Operations

We have seven (7) plants that will be affected by the final outcome of the control techniques guidelines. While we are optimistic that source reduction of VOCs will be one of the options in the CTG and one which we can ultimately achieve, we are concerned about the model plant parameters that will be used to determine the cost of add-on controls.

Specifically refer to page 4-3 of the draft CTG, model plant no.s 2 and 5, and read the exhaust rates for those two (2) plants. These residential furniture models are assumed to exhaust the same amount of air even though one finishing sequence is twice as long as the other. The short finishing sequence represents six (6) finishing steps which would reasonably correlate to six (6) spray booths while the long finishing sequence represents twelve (12) finishing steps which would reasonably correlate to twelve (12) spray booths. The exhaust rates for the long sequence could reasonably be expected to be twice as high as the exhaust rates for the short sequence.

The use of the above-mentioned exhaust data will result in inaccurate cost figures for those model plants since the cost of add-on controls is largely a function of size determined by air flow rates. In order to effectively accomplish what you have set out to do you would need to look at the exhaust rates for the long and short sequences of the model plants separately.

We are also concerned about the comments addressing the potential for booth enclosure, especially without the advantage of your including a visit to a residential furniture manufacturer. Due to the number of surfaces that must be coated a worker does not merely stand to finish a piece of assembled

Thomasville Furniture Industries, Inc. • P.O. Box 339 • Thomasville, North Carolina 27361 • 919-472-4000

Thomasville Furniture Industries, Inc.
Thomasville, North Carolina

residential furniture as indicated in the document on page 3-23. The worker moves on the line with the piece. Further enclosure would probably be possible but with drastic changes in production.

Finally, it would have been desirable to have the draft of Chapter 5 prior to the NAPTAC meeting. Mary Jane Clark in OAQPS has indicated that the comment period following the meeting will probably be two (2) weeks. As it stands we will have limited time for review and comment on what may be the most critical part of the document.

Your consideration of these matters will be greatly appreciated.

Sincerely,

Sherry Stookey

Sherry Stookey, Supervisor
Environmental Compliance

cc: Larry Belton
George Griffin
Dan Little
Jim Johnson
Carlyle Nance
Charley O'Brien
Dave Masters

AUTOMOBILE REFINISHING CONTROL TECHNIQUES GUIDELINE

Presented by: Darcy Campbell
Radian Corporation

The full text from the Environmental Protection Agency's (EPA's) presentation of the draft control techniques guideline (CTG) is provided below. Following that is a summary of the questions and discussion that occurred with the National Air Pollution Control Techniques Advisory Committee (NAPCTAC) after EPA's presentation.

INTRODUCTION

(Slide 1)

I would also like to introduce Ellen Ducey, the EPA's Lead Engineer on this project.

The facilities covered under this CTG repair and/or refinish automobiles, vans, motorcycles, and light- and medium-duty trucks. Heavy duty trucks are currently covered by another CTG that EPA developed for Miscellaneous Metal Parts.

"Shops" are defined as:

- independently-owned shops that repair collision damage and do some complete repainting,
- shops at car dealerships that repair transportation damage and collision damage that occurs after a car is sold, and
- production shops that specialize in complete repainting rather than collision repair.

The definition also includes any facilities that repair new vehicles damaged in transit.

(Slide 2)

I will first discuss the refinishing process, along with the volatile organic compound (VOC) sources. I will then discuss the VOC control methods that have been evaluated in terms of their emission reductions and costs, present the results of our regulatory analysis, and discuss the implementation of a regulation for this industry.

(Slide 3)

Estimates of the number of body shops in the U.S. vary. We estimate that there are roughly 63,000. Extrapolating by population, there are roughly 30,000 shops in nonattainment areas. Taking into consideration the existing State and local regulations already in place in Texas, New York, New Jersey, and

California, we estimate that about 100,000 tons of VOC's are emitted each year from body shops in nonattainment areas.

THE REFINISHING PROCESS

(Slide 4)

Surface preparation refers to the removal of dirt, wax, grease and silicone. Surface preparation products are used whether a replacement part is painted or the existing finish is sanded off.

Several different types of coatings are used in refinishing. "Primers" are any coatings applied before the topcoat. Types of primers include pretreatment wash primers, precoats, primer surfacers, and primer sealers. Topcoats determine the final color of the refinished area.

Many shops apply coatings in some type of spray booth. Each coating is applied to a certain "dry film thickness," which is expressed in mils, or one-thousandths of an inch.

An important consideration in the refinishing process is matching the existing car color. This is a very complex problem because there are so many car colors, and more new colors are introduced every year. For example, one car manufacturer alone can introduce 20 new colors each year, and have a total of 70 colors for cars in a given model year. Refinishing is also made difficult because topcoats applied by original equipment manufacturers (OEMs) may be complex two-, three-, or even five-stage products.

Additives and specialty coatings are different from the other coatings. They are used in small amounts as needed for easier repair and less customer dissatisfaction.

After the refinishing process, spray equipment is cleaned with solvent to remove the paint so the gun can be used again on another job.

EMISSION CONTRIBUTIONS

(Slide 5)

Emission contributions shown on this slide have been estimated using "model" shops, which will be discussed in more detail later. As you can see, the majority of emissions are from application of coatings. Equipment cleaning contributes 9 percent of the VOC's, additives and specialty coatings 5 percent. Three percent of emissions are from surface preparation. For our purposes, coating emissions begin with spraying; any emissions that might arise from the mixing process were not considered.

REGULATORY ANALYSIS

(Slide 6)

Eight model shops were developed to analyze emission controls. They were used to establish a common basis by which to calculate a baseline and the impacts of any recommended control. The model shops were developed from information in trade journals, and from discussions with industry and State agency representatives.

Our model shops represent the diversity of the industry. Shops are delineated by size, equipment, and types of coatings used.

(Slide 7)

The model shop size is reflected by the number of employees and number of jobs. Anything less than painting an entire car is considered a "spot" or "panel" repair, and is shown here as a partial job.

The information we gathered from trade journals helped us delineate shops B through H. Based on discussions with industry representatives, we added shop A to represent very small shops. Eighty percent of the model shops are medium-size, with a large range in the number of jobs they do each year. Model Shop H represents the large national chains that have more than 10 employees and a large portion of their work is full jobs.

(Slide 8)

The model shops have different types of equipment. Model Shops A and B represent the smallest shops, which are assumed not to invest in much equipment. They do not have gun cleaners or spray booths. The other medium-size shops (besides B) are distinguished by the variety of equipment they have. Shop C has a gun cleaner, D has a crossdraft booth, E has both, F has a downdraft booth, and Shops G and H, the largest shops, have invested in the most equipment: they use gun cleaners and downdraft spray booths.

A distinction is made between crossdraft and downdraft booths because downdraft booths cost twice as much, and reportedly produce a much higher quality paint job.

The combinations of equipment present in the model shops were developed based on national estimates of the percent of shops that use this equipment.

(Slide 9)

The model shops use different types of coatings. Lacquer is the easiest to use and the most "forgiving" type of coating. It dries quickly and is buffed after drying to remove dirt and dust. However, it results in the lowest quality finish in terms of durability.

Enamels and urethanes dry more slowly because they have lower VOC levels and higher solids contents, resulting in lower VOC emission potentials than lacquers. Because they dry more slowly, it is more important that the painting area be as clean

as possible. Enamels vary in their finish quality: there are low-quality and high-quality enamels. Urethanes produce the highest quality finish in terms of gloss, and are the most durable.

(Slide 10)

Model Shops A and B use a large percent of lacquer coatings because they do not have any kind of spray booth. It is possible that these shops also use urethane coatings, but in our analysis we assumed that they only use lacquers and enamels.

Shops C, D, E, and F use all three types of coatings in different combinations. Shops G and H use mostly high-quality urethane coatings.

VOC CONTROL OPTIONS

(Slide 11)

To identify VOC control options for this industry, we surveyed the industry, reviewed published literature and existing State regulations, and met with several industry representatives to identify control options. We then used model shops to determine emission reductions achievable through the use of these control options.

Surface preparation emissions can be reduced by using products that have lower VOC levels. Coating application emissions can be reduced by using coatings with lower VOC levels, whether they are higher in solids or waterborne rather than solventborne. The results of our survey indicated that in most cases this industry now tends towards higher solids rather than waterborne coatings.

Add-on control devices could also be used to control coating emissions. Add-on controls are not currently used by any shops, but they were evaluated because they are used in many other industries that spray-apply coatings. An add-on control device would control emissions from all operations that take place in the booth.

Emissions from equipment cleaning can be reduced by using gun cleaners that minimize evaporation and recirculate the solvent for several cleanings rather than manually cleaning the spray equipment. If a gun is cleaned manually, solvent may be sprayed through the gun either into the air or into a container from which it is allowed to evaporate. With a gun cleaner, solvent is drawn by suction through the spray guns after they are attached to hose connections. The outside of the gun is then either rinsed manually or automatically, depending on the type of gun cleaner. In our evaluation of gun cleaners, we found that in general they can be divided into two groups: enclosed cleaners with lids that are shut during the cleaning cycle, and open cleaners that have no lid.

Finally, making sure that shops properly dispose of their waste solvent would further reduce evaporative emissions.

SURFACE PREPARATION

(Slide 12)

Emissions from surface preparation products can be reduced through the use of waterborne rather than solventborne products. Waterborne products have VOC levels below 1.7 pounds per gallon. These products are somewhat harder to use than conventional products because they are more labor intensive and it takes longer to clean the surface. They are currently required in California and Texas.

Low-VOC products reduce emissions from surface preparation by 75 percent. The cost increase is about $5 per gallon, or $1 per full job.

COATINGS

(Slide 13)

Industry reports that they are actively developing lower VOC coatings in response to State regulations. We surveyed the six major coating manufacturers in the summer of 1990 for information on their lower VOC coatings. We asked them to list any limitations with the use of these products, especially problems with topcoat color matching. Color matching is of continuing concern because a painter may have to repaint a larger area if he has trouble making the refinish color look the same as the existing color. If the color match is not reasonably good, painters will have to paint a larger area until they reach some natural break on the car such as a fender or a door.

Color matching is so important, and there are so many car colors, we could not just set limits based on the lowest VOC primers and topcoats identified in our survey. Taking into consideration information provided on color match and product compatibility, we grouped the lower VOC coatings into two regulatory options. It should be noted that VOC emission reductions are not linear. If you had a coating with a VOC content of 6.5 lbs VOC/gal and you wanted to reduce emissions by 40 percent, you could do so by replacing it with a coating with 6 lbs VOC/gal. This is due to the fact that the lower VOC content coating has more solids in a given volume of paint so less volume is needed to coat the part. A coating with 5.5 lbs VOC/gal reduces emissions by 60 percent from that of the coating with 6.5 lbs VOC/gal. The VOC levels shown on this slide are all expressed as lbs VOC/gal coating, less water.

The VOC contents of the baseline coatings were derived from the model shops' use of lacquers, enamels, and urethanes; the high end reflects greater lacquer use and the low end reflects more use of urethanes.

Option 1 coatings are currently available to shops. We think that they are widely used because they are not very different from baseline or existing technology coatings. We think there are no color match limitations associated with the

use of Option 1 topcoats. They do, however, eliminate the use of essentially all lacquers.

The Option 2 VOC levels are more stringent. Coatings with these levels were reported by at least one company that responded to the survey. We have already received some comments that the Option 2 limits will be difficult to meet, and I think we will hear more about this in some industry presentations.

Compared to the baseline, emissions from coatings would be reduced 35 percent if all shops used Option 1 coatings, and 55 percent if all shops used Option 2 coatings. The biggest emission reductions come from the smaller shops that are assumed to currently use large quantities of lacquers.

(Slide 14)

With Option 1, the smallest shop can reduce its coating emissions by 50 percent, or 0.4 tons. The largest shop reduces its emissions by 20 percent, or 2.5 tons.

The cost increases shown here are the incremental paint costs only and do not include any additional labor or equipment costs that might be incurred. There is no cost increase for the largest shops with the Option 1 coatings because they already use coatings with low VOC levels. With Option 2, the smallest shop can reduce 60 percent of its coating emissions, and the largest shop can reduce 45 percent of its emissions, or 5 tons per year. The increased paint costs for Option 2 represent a 9 percent increase per full car for the smallest shop and a 6 percent increase for the largest shop.

ADD-ON CONTROLS

(Slide 15)

For add-on controls, we evaluated catalytic incineration, carbon adsorption, and biofiltration. We only evaluated add-on controls for the largest model shop, where the use of these types of controls is most feasible because of its high volume of work. If the spray booth is in relatively constant use, then add-on controls are more affordable.

With biofiltration, the spray booth exhaust is passed through material that contains microorganisms that convert the VOC's to carbon dioxide and water. Even though this is only in the developmental phase in this country, it may be the best add-on for this industry because it reportedly can function even with periods of non-use and with low solvent air streams.

We will continue to investigate the use of add-on controls for this industry, especially biofiltration. In particular, we will investigate whether overseas shops use any type of add-on control.

ADDITIVES AND SPECIALTY COATINGS

(Slide 16)

Our analysis indicated that the best way to control emissions from additives and specialty coatings is to limit their use rather than require reformulation or discontinuation of their use. The use of these products probably prevents some VOC emissions because a painter can prevent some surface defects from occurring, and can better blend the new paint into the old without having to paint a larger area. These products also prevent having to repaint areas because of problems such as a coating flaking off from a refinished bumper.

Limiting the use of additives and specialty coatings to less than 5 percent of all coatings also closes the potential loophole of shops identifying a product as a "specialty coating" and then using a high volume of it.

GUN CLEANERS

(Slide 17)

To reduce emissions from gun cleaning, it is recommended that shops use a gun cleaner rather than manually cleaning their spray guns. Based on comments we have received to date, I think we will be hearing more about the gun cleaning issue in later presentations.

Closed gun cleaners are required by some States. We were also going to suggest that States require their use until we saw the results of an independent study that indicates that there is a large range in the sum of the active and passive VOC losses from closed gun cleaners. Some models are not efficient in controlling evaporation. The study showed that open gun cleaners have evaporative losses as low or lower than closed gun cleaners. Gun cleaner manufacturers are researching ways to further reduce VOC losses, which may make closed gun cleaners preferable in the future, especially because from an environmental standpoint a combination of the two types of gun cleaner designs would probably be best.

The primary benefit of a gun cleaner is that roughly 10 guns can be cleaned with the same amount of solvent that would be used to clean 1 gun manually. In terms of emission reductions, this translates to about an 88 percent reduction in gun cleaning emissions for a shop that installs a gun cleaner. This amounts to an annual emission reduction of 0.2 tons for the smallest shop and 1 ton for the largest shop that does not already have a gun cleaner.

Costs range from $36/year for the smallest model shop to a cost savings of $800/year for the largest shop because of the money it saves on solvent purchases.

SUMMARY

(Slide 18)

The costs and emissions given in this presentation are for the 30,000 shops in nonattainment areas, and take into consideration existing State regulations.

Surface preparation emissions can be reduced by 1600 tons at a cost of about $2200 dollars per ton.

An emission reduction of 25,000 tons would result from the use of Option 1 coatings, at a cost of $59 million. The use of Option 2 coatings would result in an emission reduction of 53,000 tons at a cost of $122 million. Both options represent a cost of about $2300 per ton reduced.

Option 2a is Option 2 coatings used by all shops except H, which uses carbon adsorption. Emissions are reduced by 68,000 tons per year at a cost of $292 million.

The use of gun cleaners results in a national cost savings because shops will have to purchase less solvent. The smallest shops, however, would bear a total national cost of $80,000 because the value of solvent saved would not completely offset the cost of the gun cleaner.

IMPLEMENTATION

(Slide 19)

We recommend the following requirements for States implementing a regulation on the automobile refinishing industry:

- For lower VOC surface preparation products, a State would use an operational standard that requires shops to use products with VOC levels below 1.7 lbs per gallon cleaner;
- An operational standard would also be used to require the use of lower VOC coatings;
- An equipment standard would require the use of a gun cleaner that recirculates solvent, collects spent solvent, minimizes evaporation, and meets fire safety and occupational safety and health codes.

Most requirements would be enforced by recordkeeping:

- Shops would be asked to maintain records on the number of jobs they do, the VOC content and amount of surface preparation product they use, and the amount of coating, catalyst, and reducer used and their mix ratio; and
- Shops would also be asked to record the VOC content of the coating, as applied, less water.

A shop would know the VOC content if the VOC content was provided by the manufacturer along with the coating; we will include a section in the CTG on how shops should get this information, whether it be given through the "as supplied" and "as applied" VOC levels on labels, material safety data sheets, the microfiche provided with mixing machines, or some type of separate "Application Guide."

For gun cleaners, compliance would be determined by having shops maintain records of the amount of replacement solvent they

use per month and documentation of the amount of waste solvent transferred to waste treatment facilities.

OTHER APPROACHES

(Slide 20)

Some other "nontraditional" ways to reduce VOC emissions from body shops that are discussed in the CTG and that may have a big impact on this industry are some pollution prevention and market incentive measures. The EPA's Pollution Prevention office is looking into these approaches and plans to evaluate their impacts on the refinishing industry.

One example of a pollution prevention measure is for the U.S. Department of Transportation to raise the minimum standard for the strength of automobile bumpers so that less damage occurs in a "fender bender" and less of the vehicle has to be repainted.

Educating consumers about the costs of the more complex coatings, and showing them that they pay more for these coatings, may cause car manufacturers to reduce the complexity of topcoats.

As long as there are an infinite number of colors available for new cars, there will be a continuing impact on the refinishing industry. It is possible that setting a VOC limit on refinish coatings may make it impossible to color match some OEM colors.

We are suggesting that States establish a permitting program that would help locate shops, and States could use this type of program to push the industry to be more aware of measures it can take to reduce VOC emissions.

CONTROL TECHNIQUES GUIDELINE

Control of Volatile Organic Compound (VOC) Emissions from Automobile Refinishing Operations

NAPCTAC Meeting Presentation

November 1991

AUTOMOBILE REFINISHING

OUTLINE OF PRESENTATION

- Description of Process
- Sources of Emissions
- Regulatory Analysis
  - Control Options
  - Costs
- National Impacts
- Implementation

CONTRIBUTION TO VOC EMISSIONS

- ~63,000 body shops in the U.S.
- ~30,000 located in nonattainment areas
- Approximately 100,000 tons per year of VOC's emitted in nonattainment areas

DESCRIPTION OF REFINISHING PROCESS

1. Prepare surface

2. Apply coatings
   - pretreatment wash primers
   - precoats
   - primer surfacers
   - primer sealers
   - topcoats
   - additives and specialty products

3. Clean Equipment

SOURCES OF VOC EMISSIONS IN AUTOMOBILE REFINISHING

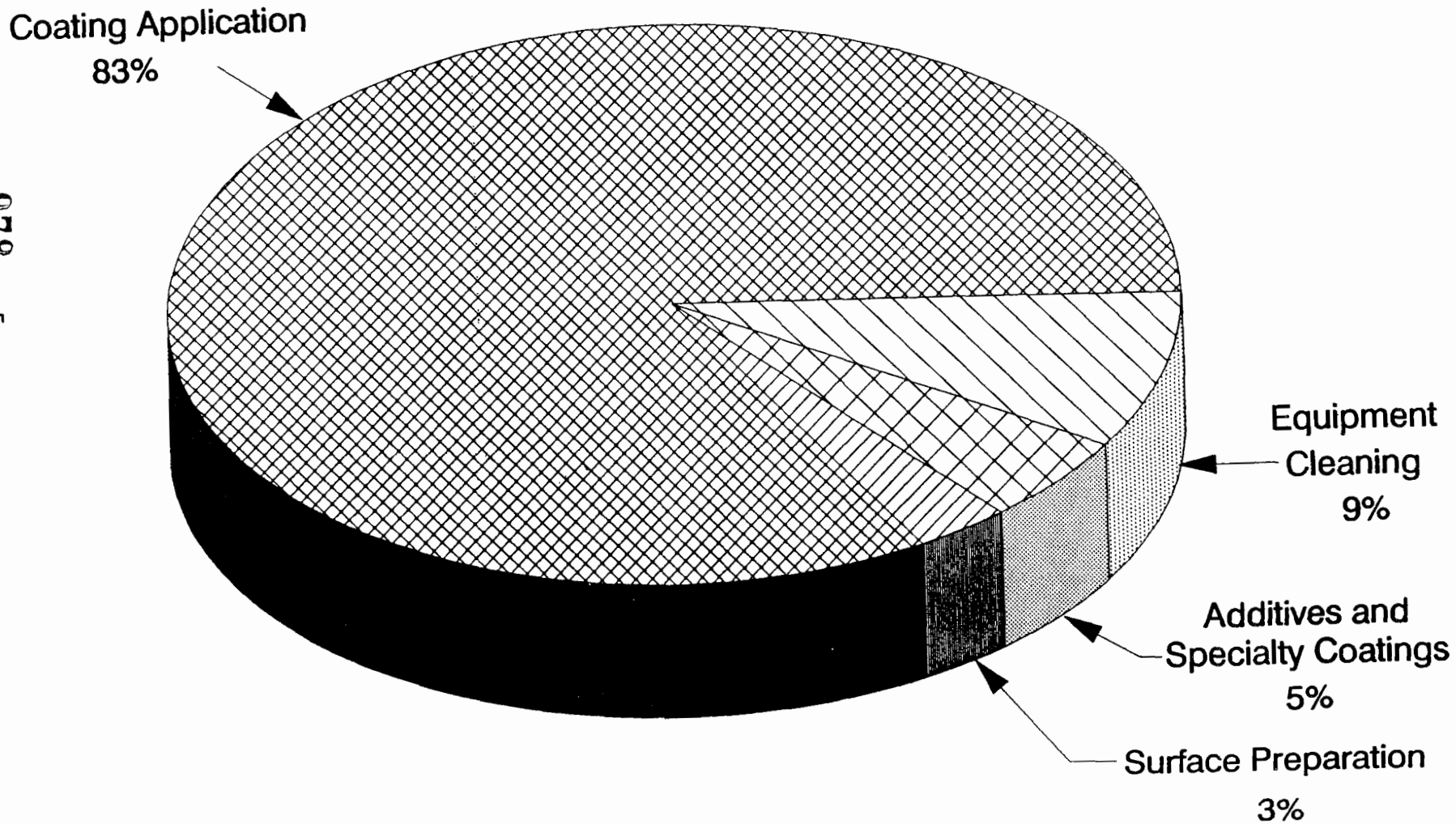

REGULATORY ANALYSIS

- Eight model shops

- Delineated by
  - Size
  - Equipment
  - Types of Coatings

SIZE

Shop Size	Model Shop	Percent of Shops	Number of Employees	Number of Jobs/Month	
				Partial	Full
Small	A	10	<5	12	1
Medium	B	14	5-10	29	1
	C	5	5-10	42	2
	D	10	5-10	62	2
	E	39	5-10	83	4
	F	7	5-10	75	8
	G	5	5-10	104	8
Large	H	10	>10	62	50

EQUIPMENT

Model Shop	Gun Cleaner	Booths	
		Crossdraft	Downdraft
A, B			
C	✘		
D		✘	
E	✘	✘	
F			✘
G, H	✘		✘

COATINGS

Type	VOC Emission Potential	Finish Quality
Lacquer	High	Low
Enamel	Varies	Varies
Urethane	Low	High

TYPES OF COATINGS

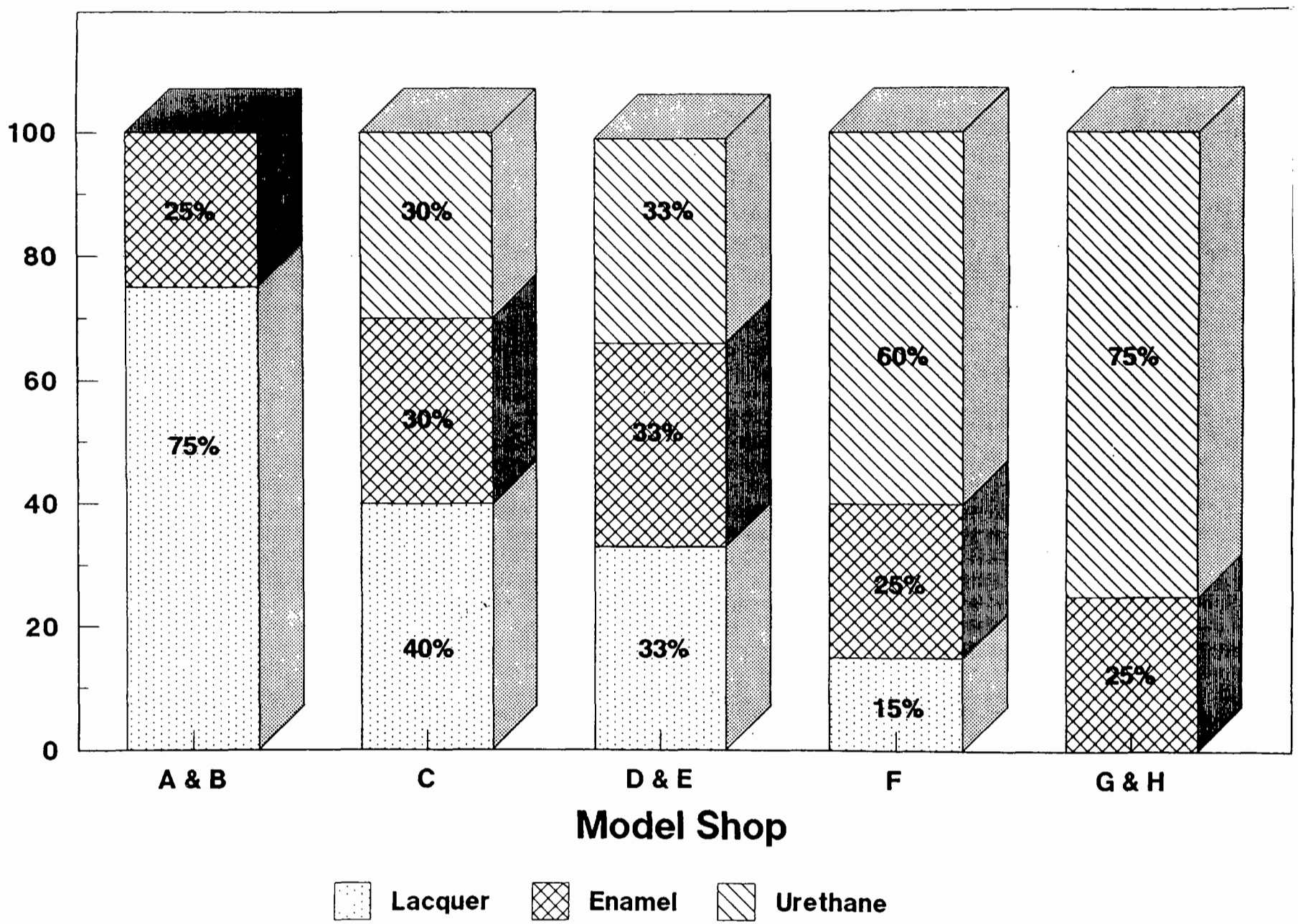

983

VOC CONTROLS FOR EMISSION SOURCES

Surface Preparation

- Use detergent rather than solvent

Coating Applications

- Lower VOC coatings
- Add-on Controls

Equipment Cleaning

- Automated Gun Cleaners

CONTROL OPTION FOR SURFACE PREPARATION

- Reformulation to Lower VOC products
  - Baseline: 6.4 lb VOC/gal cleaner
  - Lower VOC: 1.7 lb VOC/gal cleaner

- Emission Reduction

  25 lbs/yr → 600 lbs/yr
  (smallest shop) (largest shop)

- Increase in Materials Cost

  $5/gallon ($1/full car)

CONTROL OPTION FOR COATING APPLICATIONS

*REFORMULATION**

Coating Type	Baseline Technology	Option 1	Option 2
Pretreatment Wash Primers	6.5	6.0	5.5
Precoats	6.5	6.0	5.5
Primer Surfacers	4.8 to 5.7	3.8	2.1
Primer Sealers	4.6 to 5.6	4.6	4.6
Topcoats	5.2 to 6.0	5.2	4.5
Overall Emission Reduction		35%	55%

*lb VOC/gal, less water

EMISSION REDUCTIONS AND COSTS

Option 1

- Emission reduction

  0.4 tons/yr → 2.5 tons/yr
  (smallest shop) (largest shop)

- Increase in materials cost

  $9/full car → $0/full car
  (smallest shop) (largest shop)

Option 2

- Emission reduction

  0.5 tons/yr → 5 tons/yr
  (smallest shop) (largest shop)

- Increase in materials cost

  $25/full car → $17/full car
  (smallest shop) (largest shop)

CONTROL OPTIONS FOR COATING APPLICATIONS

ADD-ON CONTROLS

- Evaluated for Largest Model Shop Only

- Catalytic Incineration
  - Emission Reduction:
    from 11tons/yr to 0.6 tons/yr
    (reduces 95% of coating application emissions)
  - Cost: $155,000/yr

- Carbon Adsorption
  - Emission Reduction:
    from 11 tons/yr to 1 ton/yr
    (reduces 90% of coating application emissions)
  - Cost: $66,000/yr

- Biofiltration
  - Emission Reduction:
    from 11 tons/yr to 1 ton/yr
    (reduces 90% of coating application emissions)

ADDITIVES AND SPECIALTY COATINGS

- Include uniform finish blenders, adhesion promoters, elastomeric materials, gloss flatteners, and anti-glare/safety coatings

- Necessary for unusual performance requirements

- Used in relatively small amounts to improve or impart desirable properties

- Recommend limiting use (<5 percent of coating use by volume) and VOC content (<7lbs VOC/gal, as applied)

CONTROL OPTION FOR EQUIPMENT CLEANING

- Use gun cleaning equipment designed to reduce solvent consumption and evaporation

- Emission Reduction

  0.2 tons/yr → 1 ton/yr
  (smallest shop) (largest shop)

- Costs

  $36/year → Savings of $800/year
  (smallest shop) (largest shop)

VOC EMISSIONS AND COSTS IN NONATTAINMENT AREAS*

	Baseline (tpy)	Emission Reduction (tpy)	Total National Costs (million $/yr)	Cost Effectiveness ($/ton VOC removed)
Surface Preparation	2,400	1,500	$33.35	$2,230
Coating Applications				
Option 1	88,500	25,700	$59.20	$2,300
Option 2		53,500	$122.00	$2,280
Option 2a**		68,500	$292.00	$4,260
Gun Cleaning	9,000	5,500	Savings***	---

*Takes into account existing State and local regulations.

**Add-on control for Model Shop H (Carbon Adsorption).

***Costs of $81,000 would be borne totally by small shops. Larger shops save money by using a gun cleaner with national cost savings of approximately $375,000/yr.

IMPLEMENTATION/RECORDKEEPING

Control Technology	Type of Standard	Recordkeeping
Lower VOC Surface Preparation Products	Operational (process and material change)	- Amount used - VOC content of product - Labeling
Lower VOC Coatings	Operational (process and material change)	- Volume of coating, catalyst, and reducer used - Mix ratio - VOC content of coating - Labeling
Add-on Controls	Emission	- Performance records
Gun Cleaners	Equipment	- Amount of replacement solvent used - Amount of waste solvent removed - Documentation of proper disposal

OTHER APPROACHES

- Decrease Collision Damage
- Educate Consumers
  - Cost of "Glamorous" Coatings
  - Repair Costs
  - Insurance Costs
- Permitting Shops
  - Identifies Shops
  - Require Training

COMMITTEE DISCUSSION ON EPA PRESENTATION

Ms. McIntire suggested that references to decreasing collisions and consumer education were beyond the scope of work of the CTG. Mr. Berry responded that EPA is supposed to be giving guidance to the States on how they can achieve emission reductions. The EPA is looking at things States can do to educate consumers, for example, by explaining that since insurance companies do not inquire as to the color of a car, those who own cars with glamorous finishes are being subsidized by those who own cars with less expensive finishes. The EPA feels that these recommendations are appropriate. Mr. Johnson agreed that these recommendations are within the scope of the CTG. Ms. McIntire agreed on the need for consumer education, but indicated that it seemed inappropriate to place it in a CTG on automobile refinishing. Dr. Pinkerton commented that consumer education seems like interference.

Ms. McIntire suggested that the 5 percent limit for specialty coatings be for an averaging period longer than a day because, in some cases, a specialty coating may be the only job a small shop has for an entire day.

Dr. Pinkerton inquired on the VOC component from refinishing activities and whether the VOC's are included in the list of 190 Hazardous Air Pollutants. Ms. Ducey said some, but not all, are included. Ms. Wyatt said that the industry is not on the list of major sources because the facilities are too small; however, it is being considered for inclusion as an area source.

Ms. McIntire asked how the number of facilities in nonattainment areas was derived. Ms. Campbell responded that the number was population-driven. Ms. McIntire suggested that EPA verify the number.

Dr. Atkins inquired whether refinishing is driven by the original equipment manufacturer (OEM) coating. Ms. Ducey said it

is; colors must be matched, but the refinishing process uses different paints because the cure temperature must be much lower.

Mr. O'Sullivan asked why there was no mention of transfer efficiency (TE) in the CTG, especially if it is more cost-effective than other control measures. The EPA responded that it is an attractive option that will be encouraged, but a quantitative requirement based on it will not be part of recommended RACT in the CTG.

Mr. O'Sullivan suggested using Options 1 and 2 as a phased approach. He questioned whether the cost-effectiveness figure on slide 18 (for Option 2a) is average or incremental. Ms. Campbell responded that it is average. Mr. O'Sullivan suggested showing incremental cost-effectiveness from Option 2 to Option 2a. He also commented that the recordkeeping requirements would be tough for industry and that permitting should be avoided for small facilities, although perhaps a standard permit could be developed.

Ms. McIntire hoped that placing VOC limits on products would not place industry in a bad position regarding matching colors. Mr. Taranto questioned the statement that limiting VOC levels may make it impossible to match OEM colors, and whether it might require that an entire vehicle be refinished rather than just a portion. Mr. Berry responded that the OEMs could always introduce colors that refinishers can not match, but while OEMs are trying to go with "snazzier" coats and colors, EPA is pressing the other way. Eventually, designers of original colors and repair capabilities must come together to strike a balance between VOC limits and color match.

A member of the audience asked how odor varied between Options 1 and 2. Ms. Campbell did not know. The audience member recommended odor as well as air toxics control because odor is the major source of complaints for body shops. Mr. Berry commented that add-on controls can mitigate odors.

The EPA presentation was followed by six industry speakers. These presentations are provided below in full text. After each industry speaker, NAPCTAC members were provided an opportunity to ask questions. These questions and the ensuing discussions are summarized for each presentation.

National Paint & Coatings Association

POSITION PAPER

OF THE NPCA AUTOMOTIVE REFINISH COALITION

CONCERNING

DRAFT AUTOMOBILE REFINISHING CONTROL TECHNIQUE GUIDELINE

****

Introduction

The NPCA Automotive Refinish Coalition: The Automotive Refinish Coalition was formed in 1988 under the auspices of the NPCA to work for effective and nationally consistent VOC regulations for the automotive refinish industry.

The active participants in the Coalition are the six national manufacturers of automotive refinish paints and coatings: AKZO Coatings, Inc.; BASF Corporation; E.I. du Pont de Nemours; Nason Automotive Coatings; PPG Industries, Inc.; and the Sherwin Williams Company. Collectively, these companies account for the lion's share of the total volume of automotive refinish products that are sold in the United States. These companies also provide the majority of the training that is taken by individuals to become proficient in the use of automotive refinish products. The six individuals who represent these companies on the Automotive Refinish Coalition collectively possess over 150 years of experience in the industry. They therefore are in a particularly good position to comment on the industry's products and the underlying economics and operational requirements of automotive refinish facilities.

The Coalition also has as adjunct members a number of trade associations that represent user segments of the industry. While the adjunct members generally support the positions taken by the six manufacturer members of the Coalition, they have not had an opportunity to review this position paper. Consequently, the positions taken should be seen as representing only those of the six manufacturers.

Objective of the Coalition: The objective of the Coalition is the development of nationally consistent VOC regulations that achieve significant, real and effective reductions in VOC emissions from automotive refinish facilities while not imposing unnecessary additional costs or losses in productivity on the automotive refinish facilities.

Moving to lower VOC containing products will create enormous productivity problems for automotive refinish facilities. Our

1500 Rhode Island Avenue, NW • Washington, DC 20005-5597 • 202/462-6272 • FAX 202/462-8549

concerns on this score are particularly strong because the industry has a large population of small businesses. Approximately 40% of the shops employ less than five individuals and have sales volume of under $150,000 annually, according to a 1988 EPA study of the industry.

Effective VOC Regulations Must Recognize and Incorporate Industry's Practices and Operational Realities

To achieve the objectives of significant reductions in VOC emissions from automotive refinish facilities at the least amount of unnecessary economic disruption to the industry, a regulatory program must incorporate fundamental technical, operational, and economic features of the industry.

Achieving Adequate Matching of Repair to OEM Finish: Achieving an adequate repair that matches the existing coat so that the repaired area is imperceptible is the central requirement of the industry. Thousands of colors and coatings must be available for all model years of the various car manufacturers to match the many different features of thousands of original coatings, such as their color, gloss, and durability, as well as the effects that time and the elements have had on the OEM color and finish. All of this must be accomplished at facilities with far less sophisticated equipment, under much more difficult and uncontrolled circumstances than exist at the original equipment manufacturers' facilities.

Systems Nature of Today's Products: Today's products are provided by individual manufacturers in the form of chemically complex interrelated components to a single system. The components of a particular repair system must be used only within the system of the particular manufacturer and pursuant to the manufacturer's instructions to ensure that the refinish job will not fail.

Composite Calculation for Multiple Coat Topcoats is Essential: The use of multiple coats involving a base coat for color and clear coats for appearance and protection as well as in some cases a midcoat is the predominate original equipment manufacturer (OEM) topcoat system. The appearance of these OEM topcoats must be matched by the automotive refinish industry and consequently, the industry must use multiple coats in a topcoat system.

Comments Concerning Regulatory Approaches

The RACT VOC Limits of the California Guideline for the Industry Should be Selected as the RACT Limits for the CTG

The purpose of the CTG is to establish technology that is the presumptive norm for "reasonably available control technology" (RACT) which must be implemented by states in their ozone nonattainment areas. EPA has defined (and Congress has accepted) RACT to mean: "The lowest emission limitation that a particular source is capable of meeting by the application of control technology that is reasonably available considering technological and economic feasibility. RACT for a particular source is determined on a case-by-case basis, considering the technological and economic circumstances of the individual source. (44 Federal Register 53761, 53762 (September 17, 1979))

On the basis of this standard -- a standard that emphasizes the economic and technological feasibility of control technologies in light of technological and economic circumstances of the sources -- the VOC limits that have been established by California's Air Resources Board's Automotive Refinish Guideline for RACT under California's Clean Air Act (which has a much tougher standard and program for ozone attainment than the federal law) should be RACT for the national program. (See attached chart for the California Guideline RACT limits.)

While the terms "reasonably available" and "feasibility" are not defined by the EPA, an ordinary dictionary definition of "feasible" is something that is "capable of being used or dealt with successfully;" "available" has been defined in a manner especially relevant to this discussion as "present in such chemical or physical form as to be usable;" and "reasonably" has among its ordinary meanings "moderate, fair, and inexpensive." When the meanings of these terms are coupled with the requirements of "economic and technological feasibility" and the additional requirement that the feasibility of the control technology be ascertained on the basis of the "economic and technological circumstances of particular sources," then whatever else RACT means, it certainly cannot mean the imposition of technology-forcing standards on existing sources.

The California RACT limits have much to recommend them for adoption in the CTG.

First, by actual implementation in automotive refinish facilities, they have been proven to be currently "reasonably available" and "technologically and economically" feasible. Second, they have been established by the toughest clean air program in the country. In this connection, we note that the

California Clean Air Act has a much more stringent ozone design value of .09 ppm as compared to the federal standard of .12 ppm.

The attached chart represents a comparison of VOC reductions that could be achieved by implementing the California Guideline's RACT limits.

According to the Study's Own Findings, Option 1 and Option 2 Limits Are Technology-Forcing Standards; They, Therefore, Are Completely Inappropriate for the CTG

By the study's own statements, Options 1 and 2 represent "technology-forcing" VOC limits, requirements that are not currently "reasonably available" as that term is defined by the EPA. Therefore, these options do not qualify as RACT. Moreover, if the base coat/clear coat composite calculation method is not employed, then the limits specified for topcoats under both Option 1 and Option 2 are not only "technologically and economically infeasible" for the "particular sources" of automotive refinish facilities, they are absolutely impossible to achieve with today's technology.

The study indicates that lacquer product systems are still widely used by many of the smaller shops that do not have spray booths. (See pages 2-7, 2-20 through 2-25 of the study.) The study also assumes that such shops constitute approximately 30% of the industry. (See Table 2-1 at page 2-22.) Moving these shops away from lacquer products to other more difficult to use and slower drying products will be difficult and very costly. The unmistakable implication of the topcoat limits of Options 1 and 2 is that a large number of the industry's smaller shops will be put out of business. The study estimates that the cost of a spray booth would be approximately $30,000. We believe that this estimate is low. And most of these shops are currently grossing at most $150,000 per year. Few if any banks, especially in today's economic climate, would lend the amounts needed for such a capital outlay to the smaller shops. Consequently, topcoat limits of Options 1 and 2 which would prevent the use of any lacquer system do not represent a "currently" "reasonably available control technology" as judged on the basis of "technological and economic feasibility" of these "particular sources."

The study also states that, "Option 1 VOC limit had the reported disadvantage of poorly matching OEM colors (especially metallics), indicating that they are best suited for complete vehicle refinishing jobs." (See page 3-4.) In view of the fact that the study also finds that the "... the OEMs use metallic and 'pearl' coatings on at least 50 percent of all new vehicles....", it should be clear that the Option 1 VOC limits do not constitute "reasonably available control technology" for this industry. Establishing the Option 1 or 2 limits, according to the study's

own findings and conclusions, would in effect mandate that a larger proportion of the repairs be accomplished by complete refinish jobs. This would necessarily result in the emissions of more, not less, VOCs and would fail to achieve the fundamental objective of RACT -- achieving reasonable further progress towards attainment. Additionally, there is the question of whether establishing VOC limits that "poorly match OEM colors" for 50% of the vehicles the industry repairs constitutes a "technologically and economically feasible" control technology for an industry that has as its sole reason for being the ability to make repairs so that the repair is imperceptible.
The study also contains a number of misleading assumptions concerning the VOC emissions that should be associated with the industry's products and operations. The first of these involves assuming that the VOC content of products that are supplied to areas which currently have regulations constitute the baseline "current technology" of the industry's products that are generally used in the United States. (See Table 3-1 at page 3-6.) In fact, the majority of the products supplied by the manufacturers are to areas for which no VOC limits for their products exist, including the vast majority of current ozone nonattainment areas. Defining baseline technology as the study does would lead to a gross understatement of the contributions in VOC reductions that properly should be attributed to this industry introducing lower VOC containing products to areas that heretofore have not required lower VOC containing products. The Act's new requirement for reducing by 15% overall VOC emissions in the top four categories of ozone nonattainment areas by 1996 will place extraordinary pressures upon all sources to reduce their fair share of VOC emissions. Thus it is essential that the CTG accurately characterize the existing VOC emissions from this industry in these areas to ensure that it is not tasked with regulations that exact an unreasonable contribution in VOC emissions reductions.

Additional misleading statements and assumptions in the study concern the following subjects: the statement concerning current usage of coatings that implies that all coatings material supplied to refinishers are in fact applied, when approximately 20% -- 25% in practice is wastage and is disposed of by incineration in which there is no release of VOCs; overstatements of the required or recommended film thicknesses; and overstatements of the paint consumption in each of the coatings categories. These are more fully discussed in the submission from BASF.

We anticipate the argument that since the California Guideline 1992 limits are just around the corner and that since some of these limits are more stringent than comparable limits in Option 1, the manufacturers should be able to meet the limits of Option 1 nationwide if they can meet the California 1992 VOC limits in California. In answer to such an argument, we point out that the

products that are needed to meet some of these limits, especially the topcoat limit, are still not yet at a stage of development that would allow the manufacturers to introduce them into facilities without substantial expenditures in time and resources. These products will require the use of spray booths, which the study itself notes are not widely used by the smaller shops which makes up about 30% of the industry. Moreover they will require the use of drying equipment, because the products will be mostly waterborne products with substantially longer drying times. In order to maintain today's levels of productivity in terms of the number of vehicles that are completed substantial expenditures for drying equipment will be required.

Finally there is a question of scale involved here. It should be noted that the California 1992 limits will be confined only to certain air quality districts in California. While the manufacturers may have sufficient resources to weather the problems and expenditures that will be associated with introducing these products into a limited number of areas in California, imposing similar requirements nationwide results in an effect on the manufacturers that certainly qualifies as "economically infeasible."

We realize that the EPA is interested in crafting a CTG that accurately reflects what can be accomplished by the industry at the time the CTG is published and that it is confronted with the difficulty of a moving target in the technologies. The six manufacturers have expended literally tens of millions of dollars thus far in efforts to develop lower VOC products and the EPA is right to anticipate that these efforts will continue. But this problem of RACT being overtaken by new developments is addressed in the newly amended federal Clean Air Act which now requires that the EPA periodically revisit CTGs to determine if technology has moved ahead of existing CTG standards. We suggest that this is the only appropriate process recognized by the Act for introducing technology-forcing factors into developing CTGs. Requiring technology-forcing limits in the CTG itself is completely at variance with the essential "reasonably available" nature of a RACT standard.

We have another suggestion by which this current effort to determine an automotive refinish CTG could avail itself of new technologies that might be available at the time this CTG is finalized. If this CTG development process takes until 1993 to be finalized, it is possible that the experience gained in meeting the California Guideline's 1992 limits in California will demonstrate by then that the Option 1 limits and perhaps some of the California 1992 limits are in fact "reasonably available" in terms of their "economic and technological feasibility" for national implementation. We note, however, that, with respect to the California 1992 limits, the industry at the present time

does not have a sealer that would meet the limit specified for this coating. Because of this and other potential problems of introducing such advanced systems nationwide, at the present we believe that a lead time for implementing such limits would be needed, e.g., implementation in 1994 or 1995.

The Necessity of Base Coat/Clear Coat Averaging For Determining the Topcoat Limits

The multiple coat system of topcoats is the current predominate topcoat technology of the automotive manufacturing industry and the refinish industry must be able to match these topcoats. Using a composite calculation for the VOC content of the base coat and clear coat in a topcoat system to determine compliance with the topcoat VOC limit is dictated by the actual day-to-day "technological and economic circumstances" and practices of the industry.

A statement of the study which may account for the failure of the CTG Model Rule to include a base coat/clear coat composite calculation method is an apparent misunderstanding of the basis for weighting base coats and clear coats at a ratio of 1 for base coats to 2 for clear coats. The ratio is based upon the actual usage of the industry. It is the industry experience that the volume of base coat paint that is used for any given repair is approximately on half the volume of clear coat that is used. In this connection we refer you to the information that has been provided by the BASF Corporation which is based upon the actual usages at an automotive refinish type of operation at the Saturn General Motors plant and by the Sherwin Williams Company. In fact that experience indicates that the ratio is higher, e.g., for 1 gallon of base coat, 2.3 gallons of clear coat are used. The study assumes that because clear coats are a higher solids product than are base coats, then the volume of clear coat material that is needed to repair the are covered by the base coat should be twice the volume of base coat material. The major reason that the industry generally uses twice the amount of clear coat material as it does base coat material is the need to achieve adequate color and finish match for spot repairs that requires that the clear coat in general be extended far beyond the area covered by the base coat. About 90% of the automotive refinish work that is done is spot repair.

The Systems Nature of the Industry's Products

Because the chemistry of the individual components of a repair system is highly interdependent, the components of a particular manufacturer's system must be used according to its instructions and cannot be interchanged with the products of another manufacturer. The systems nature of today's repair products has two very important implications for a regulatory system that limits the VOC content of the products. First, regulators can

have a great deal of confidence that refinishers will not attempt to match relatively higher VOC components of one manufacturer's repair systems with those from another and that therefore the VOC levels associated with a particular system will be complied with. Secondly, the regulations cannot simply select the lowest VOC components of the available repair systems and dictate that these components be incorporated into every repair system.
and in the right amounts. As a recent article from an automotive refinishers professional magazine points out:

> [T]here is no margin for error in applying or mixing today's products. The paint company chemist was able to create a product to suit, but only if you do exactly as he says. Not only must the painter combine the correct solvent, catalyst and topcoat in the correct percentages, but it must be applied over the correctly mixed undercoats at the correct time... There is only one right way to use today's finishes; exactly according to directions and using only one brand.

Auto refinishers will not act as their own chemists; they will follow the manufacturers' instructions or risk a failed job without the protection of a warranty.

Another feature of the industry that supports the conclusion that automotive refinishers will comply with the VOC limits specified for products is the VOC compliance instruction material and the training that is supplied by the manufacturers to users of their products.

<u>The Need for Specialty Coatings</u>

It also is essential to recognize the need for relatively higher VOC containing specialty coatings. These products constitute a very small percentage of the products used by the industry but they are essential to effectively accomplishing certain repairs. An important example of these are "uniform finish blender" specialty coatings to make spot repairs. This specialty coating blends the repaired area in with the surrounding original finish to match all facets of its appearance, including color, metallic orientation, texture, and appearance. Greater VOC emissions would occur if refinishers do not have the ability to perform spot repairs because they would be required to paint an entire panel of the vehicle or the entire vehicle itself in order to achieve acceptable results.

We recognize that the model CTG includes the category of "specialty coatings." But its characterizing them as being "reportedly" needed for unusual job performance requirements, however, concerns us because that implies that the need of these products is debatable. The special role of specialty coatings should be emphasized by the CTG. It should not be implicitly

questioned by the CTG which might invite states to modify the CTG by removing the category.

We also recommend that the California Guideline's definition of specialty coatings should be adopted. The definition does not limit the type of coatings that can fall into this category but restricts the coatings to 5% the total volume of coatings applied by an automotive refinish facility. This approach allows for the development of additional specialty coatings and the 5% restrictions ensures that the category will not be abused.

The General Use of HVLP Spray Guns Results in Significant Reductions of VOC Emissions and Should be Encouraged

The efficiency of transferring coatings to the vehicles has been greatly improved by the use of high volume, low pressure (HVLP) spray guns. The resulting VOC reductions that accompany the reduced amount of coatings material that is required because of the improved transfer efficiency should be explicitly recognized by the regulations. To do otherwise deprives this industry of having credited to it significant VOC reductions that in fact result from the use of HVLP spray guns. The unwillingness of the EPA to explicitly recognize and to credit VOC reductions associated with the use of the equipment is a hidebound adherence to notions concerning "quantification" and "replicability" of VOC emission reductions. These principles were established for a regulatory regime that focused on well-heeled and richly staffed large stationary sources which lent themselves to such precise demands for crediting VOC reductions. The 1990 amendments to the law, however, require the regulation of much smaller sources and therefore the EPA's VOC emissions reduction accreditation principles must be retailored to measure the effectiveness of regulatory controls that are appropriate for the much smaller sources.

As the study notes, appropriate training has a great deal to do with the efficacy of HVLP use. In this connection, it should be recognized that extensive training is provided in this area by the manufacturers of automotive refinish coatings and others. Further, aside from the regulatory requirement to use such equipment, autorefinish facilities have a very strong economic incentive to use the equipment to reduce their consumption of coatings.

It also should be noted here that the study seems to assume a 35% transfer efficiency for the conventional spray gun but is unwilling to assume any transfer efficiency for the HVLP. This is anomalous in that any problems that are associated with achieving effective transfer efficiency with the HVLP spray gun, such as variability in operator use and the shape of the object being coated, also apply to conventional spray guns.

The experience of the Coalition is that the use of HVLP spray guns results in reductions of 20% -- 45% in materials usage and some credit for the resultant VOC reductions should be given.

Add-On Controls

The various engineering add-on control technologies identified by the study for facilities would be cost prohibitive and or technologically infeasible for the great majority of automotive refinish facilities to adopt at this time. Nonetheless, the regulations should recognize such controls as voluntary alternative control techniques that could be used in lieu of lower VOC containing products. The technology of add-on controls could improve in the near future, perhaps rapidly, and they could come to represent cost-effective alternative compliance methods.

Conclusion

The objective of the CTG is to establish a guideline for what is the presumptive norm for "reasonably available control technology" (RACT) under the federal Clean Air Act. In developing such a guideline, the "reasonableness" of the technology is to be considered as well as both its "technological" and "economic" feasibility. On the basis of these criteria and our knowledge of the industry -- the available coatings technology and the operational and economic requirements of automotive refinish facilities -- we believe that the VOC limits specified for RACT in the California Guideline should be the limits established by the CTG. The adoption of these limits from a program that is much tougher than the federal program will ensure that the industry contributes more than its fair share of VOC emissions reductions in the nation's ozone nonattainment areas. We also believe that specialty coatings must be explicitly recognized as an essential technology for the industry to achieve VOC emissions reductions. Further, it is absolutely critical that the multiple coat composite calculation technique for determining compliance with VOC topcoat limits be recognized. This is the way the industry applies the topcoats and it is the only way that VOC limits for increasingly waterborne topcoats can be met. The contributions made by HVLP spray guns should also be recognized by the CTG. Finally add-on controls should be recognized as a voluntary alternative compliance method.

The possibility that the Option 1 or even some of the California Guideline's 1992 VOC limits may be demonstrated to be "reasonably available" by the time the CTG is finalized in 1993 is also worth considering. The six manufacturers would concur in such an approach provided that before the limits are adopted as part of the CTG, the technology has in fact been shown to be reasonably available and that an appropriate lead time is afforded (e.g., until 1994 or 1995) to ensure that the products in fact are "reasonably available."

COMPARISON OF VOC EMISSIONS REDUCTIONS

DRAFT CTG							CARB's GUIDELINE					
Coating Category	Baseline VOC*	Option 1		Option 2		% of Total Coatings CTG	% of Total Coatings CARB	Coating Category	Baseline VOC	CARB'S RACT		CARB'S 1992 Limits**	
Pretreatment Wash Primers & Precoats	6.5	6.0	.15%	5.5	.31%	2%	1%	Pretreatment Wash Primers	6.7	6.5	0.1%	6.5	0.1%
--------	--------	--------		--------			1%	Precoats	6.7	6.5	0.1%	6.5	0.1%
Primer Surfaces	4.8 - 5.7	3.8	4.0%	2.1	7.6%	12%	12%	Primer/Primer Surfaces	6.7	6.0	2.3%	2.8	12.6%
Primer Sealers	4.6 - 5.6	4.6	0.9%	4.6	0.9%	5%	5%	Primer Sealers	6.7	6.0	2.3%	3.5	4.3%
Topcoats***	5.2 - 6.0	5.2	7.7%	4.5	14.5%	58%	17%	Topcoats***	6.7	6.0	3.2%	5.0	22.8%
--------	--------	--------		--------			41%	Metallic/ Iridescent***	6.8	6.0	8.7%	5.0	19.5%
Surface Cleaning	6.4	1.7	5.9%	1.7	5.9%	8%	8%	Surface Cleaning	6.7	1.7	6.0%	1.7	6.0%
Enclosed Equipment Cleaning	6.7	85%	0.8%	85%	0.8%	10%	10%	Enclosed Equipment Cleaning	6.7	88%	0.8%	98%	0.8%
Specialty Coatings	7.0	7.0	0.0%	7.0	0.0%	5%	5%	Specialty Coatings	7.0	7.0	2.8%	7.0	2.8%
Transfer Efficiency	35%	35%	0.0%	35%	0.0%			Transfer Efficiency	25%	45%[1]	0.0%	45%[1]	0.0%
DRAFT CTG								CARB GUIDELINE					
Reduction Achieved	-0-		18.6%		30.0%			Reductions Achieved	-0-		26.3%		69.0%

*Baseline VOC set on controlled areas emission survey data. Should be based on uncontrolled emissions survey data.

**Technology forcing limits that can be added to CTG in 1994 - 1995 once technology has been demonstrated in California in 1992 - 1993.

***VOC limits based on composite multi-stage topcoat calculations.
1. $^{45\%}/_{25\%}$ = 1.8 factors applied to VOC reduction categories in column expect for enclosed equipment cleaning and surface cleaning.

COMMITTEE DISCUSSION ON INDUSTRY PRESENTATION

Karl Schultz, National Paint and Coatings Association, Automotive Refinish Coalition (See attached Presentation #1)

Dr. Pinkerton noted that Mr. Schultz's estimate of 40 percent of shops having less than five employees did not agree with the CTG's figure of 10 percent. Mr. Schultz said his information was from a magazine survey and he thought it was accurate. He suggested that the model shop analysis might mislead States in that it misrepresents the industry (i.e., lacquer use may be underestimated for a given model shop). He noted that shops in this industry can not be pigeonholed; for example, there are very small shops that specialize in high-quality work. Mr. Hise noted that if the magazine survey showed shops with 5 or less employees, then the model shops could match 40 percent because they show a range of employees. Ms. Ducey commented that the number of employees is not used in EPA's analysis, and does not have to be shown in the CTG.

Dr. Pinkerton asked whether the Coalition agreed with the estimate of 100,000 tons per year of VOC being emitted from body shops in nonattainment areas. Mr. Schultz said he had not seen that estimate before, but guessed that it was probably close. Dr. Pinkerton asked what national emission reductions would their RACT (and 1992 limits) recommendations achieve. Mr. Schultz said they had not been calculated. Mr. Arkell asked why, on the table Mr. Schultz provided, the percent reductions in emissions with CARB's 1990 RACT limits and 1992 limits are higher than EPA's Option 1 and Option 2 percent reductions. Mr. Schultz responded that the differences in solids content per gallon paint were not taken into consideration in their estimates. The CARB values take into consideration a TE of 25 percent for both the baseline and the 1990 limits, and a TE of 45 percent for the 1992 limits.

Mr. Arkell questioned whether the major factor in the difference in percent reductions is the use of different baseline values. Mr. Schultz felt that EPA's baseline is based on controlled limits, and the Coalition's estimated baseline values are higher. He strongly disagreed with EPA's figure. Mr. Hise asked if the baseline values used by the Coalition were based on 1990 data. Mr. Schultz said 1988 data were used. An audience member commented that the figure was based on sales, not consumption. He said the 1990 VOC coating data are not different from the 1988 data, but sales have fallen.

Dr. Atkins asked if Mr. Schultz had said that compliance with the 1992 CARB rules would require spray booths. The answer was yes; the Coalition recognizes that shops without spray booths would have difficulty using some coatings and that this will be a huge adjustment for small shops.

Mr. Arkell questioned whether the California rule requires 65 percent TE. The answer is yes. Mr. Arkell than commented that the discussion seems to keep coming back to TE, even though EPA has said that it is too difficult to quantify. He suggested EPA look at it again. Perhaps a percent reduction credit could be given for TE. He also inquired that if EPA can not quantify TE, how is California doing it. The response was that they can't and are working on that problem now. California recognizes that it is a difficult problem, but they also know that success would result in reductions in VOC's. Mr. Dennison commented that California defaulted to high-volume low-pressure (HVLP) spray equipment, and said that other types of spray equipment would have to demonstrate that they could achieve 65 percent TE. Subsequently, manufacturers of other types of spray equipment have petitioned, and the State has had to defend the 65 percent TE requirement which relies on a laboratory test procedure.

Mr. Schultz noted that another reason for strongly suggesting that EPA use the California standards is because this industry is a highly spread out, distribution-based industry and it must have uniform standards. A can of paint can be in the system for 3 to 5 years. Multiple standards in the U. S. would

be unmanageable, and the Coalition feels the California standard is stringent enough to be a national standard.

Mr. Jordan asked Mr. Schultz to clarify whether he was recommending that EPA adopt the 1992 California limits. Mr. Schultz responded that the Coalition is recommending that EPA use the California RACT limits. The 1992 limits are not "reasonably available." The Coalition would support the 1992 limits after the products have been demonstrated successfully in California. From a legal standpoint, the Coalition is concerned that if the CTG becomes law (with the 1992 limits as RACT), and the limits are not achievable for all colors, States would not be able to relax their State Implementation Plan (SIP) requirements. He suggested that if the CTG requirements were different from California's, the coating manufacturers would be forced to recommend that States ignore the CTG and use California's limits.

Mr. Berry commented that the definition of RACT that the Coalition keeps using is not complete. The RACT does have a technology-forcing aspect.

Citing the fact that specialty coatings need a higher VOC content, Mr. Dennison asked whether the coating manufacturers had a time frame for reducing the VOC content of specialty coatings. Mr. Schultz explained that the manufacturers formulate these products at 7 lbs VOC/gal for their unique properties and applications. If VOC content must be reduced, solids must be increased and the paint layers could not be applied thinly enough. Mr. Dennison asked whether shops vary in their specialty coating use. Mr. Schultz replied that 99 percent of shops would not exceed the 5 percent cap on their use, but there would be some small specialty shops, such as van-converters, that might have trouble with the limit.

Mr. Dennison inquired about the recordkeeping burden. Mr. Schultz said that the Coalition feels that it would be real drain for small shops. The 2-3 hours per day required for recordkeeping would be unproductive time. Mr. Dennison asked that if EPA did follow California's lead, would manufacturers be willing to participate in some type of quantification program.

Mr. Schultz responded that they do already. The material safety data sheets (MSDS) show VOC level. Mr. Dennison asked whether the MSDS also show VOC content less water. The response was yes.

Ms. Sheiman commented that recordkeeping and public disclosure of emissions (not already done by this industry) might go a long way in motivating voluntary compliance by shops and lead to creative ways of reducing emissions.

Mr. O'Sullivan asked if manufacturers would consider developing some type of industry-wide certificate program for operator training. Mr. Schultz replied that they are already looking into this. The industry does not support distribution of a product to persons who are not trained in its use. The industry is looking at how best to certify operators and the need for training materials.

Mr. Berry inquired about how the OEM's ensure that colors can be matched by refinishers. Mr. Schultz's answer was that OEM colors are selected 3-4 years in advance, and properties such as their handling and consistency are checked. The colors are also analyzed for their repair capabilities. They do sometimes find that a color can not be matched in refinishing. Mr. Berry suggested that the worst thing that could happen (from selection of any limit) is that it might restrict the designer's future color choices. Further, some existing cars would have to be completely repainted rather than spot repaired because the color could not be matched. Mr. Schultz replied that the entire car may not have to be completely repainted, but at least a larger area would have to be repainted.

Industry Presentation #2

BASF Corporation

BASF

Automotive Refinishing

November 1, 1991

Mr. Bruce C. Jordan
Director, Emission Standards Division (MD-13)
Office of Air Quality Planning and Standards
U.S. Environmental Protection Agency
Research Triangle Park, NC 27711

Dear Mr. Jordan:

On behalf of BASF Corporation, I am submitting the following commentary regarding the September 27, 1991 Draft of "Automobile Refinishing Control Techniques Guideline", which you indicate will be the key information source for determination of Reasonable Available Control Technology (RACT), and subsequent development of control technique guidelines for regulation of the volatile organic compound (V.O.C.) emissions from the Automobile Refinish industry.

In general, we feel the draft represents an honest attempt to portray our industry and does a good job of describing the refinish process. However, there are what we feel to be inaccuracies that tend to grossly overstate the industry's contribution to V.O.C. inventories that I would like to address, plus present data to you that will substantiate the use of numerical averaging of V.O.C. calculations for multi-stage topcoat systems.

Major Issues

I. The September 27, 1991 Draft does not acknowledge the use of numerical averaging of multi-stage topcoat systems for determination of V.O.C. content. Rationale given in the text (Page 3-8) is that the author felt a "potential" problem may exist with the equations used to determine the average V.O.C. content of the combined coatings, in that twice as much clearcoat as basecoat may not be needed to cover a given surface area. Many current state regulations acknowledge the basecoat/clearcoat averaging concept and utilize the following equation for calculation of a two-stage topcoat system.

19855 West Outer Drive Suite 401 East Dearborn, Michigan 48124 (313) 561-9100

$$V.O.C._T = \frac{V.O.C._{BC} + 2\ V.O.C._{CC}}{3}$$

Where: $V.O.C._T$ = Total V.O.C. Content

$V.O.C._{BC}$ = V.O.C. Content of Basecoat

$V.O.C._{CC}$ = V.O.C. Content of Clearcoat

The author of the Draft makes the erroneous assumption that this equation was derived from the ratio of the dry film thickness of the two components (see Page 3-7). In fact, the ratios are <u>not</u> based on dry film, but rather on paint consumption ratios of two parts by volume of clearcoat to one part of basecoat.

BASF states in its product literature for basecoat clearcoat systems to apply the following on each component:

	NUMBER COATS	APPROXIMATE FILM THICKNESS
Basecoat	2-4 Light Coats	0.7 Mils
Clearcoat	2-4 Heavy Coats	2.5 Mils

Material usage ratios under these conditions actually result in a higher than 2:1 ratio. This can be substantiated by data collected by General Motors at their final line repair area of their Saturn assembly plant in Spring Hill, Tennessee. The repair facility at Saturn is basically a "refinish shop" and utilizes our Diamont refinish basecoat/clearcoat system. Material usage at this line is recorded on a "material applied" basis at application. The data below represents a three month usage study conducted earlier in 1991.

<u>Basecoat/Clearcoat Applied</u>

39.15 Liters Reduced (RFU) Basecoat

89.98 Liters Reduced (RFU) Clearcoat

This yields a clearcoat/basecoat usage ratio of 2.30:1, which is very favorable compared to the 2:1 ratio for theoretical calculations in B.A.A.Q.M.D. Rule 45, CARB SCM recommendations and other state regulations.

To further substantiate basecoat/clearcoat usage ratios, BASF recently did a study on car shells at our Whitehouse, Ohio Application Facility. The study was conducted using both conventional air assisted spray guns and the more efficient HVLP gun. Vehicles used in the study were Caprice Classics, which are representative of a large size car. The study also compared usage ratio for complete and spot repairing. The study utilized a high solids (4.4 V.O.C.) clearcoat with a low solids (6.4 V.O.C.) basecoat so that the worse case usage ratios would be developed.

Results

1. Complete Repainting

A. Conventional Air Assisted Gun

Basecoat	-	Diamont Blue Metallic reduced 1:0.75 with BR60 reducer
Gun	-	Sata Jet Gravity feed set at 85 PSI
Basecoat Application	-	Two medium coats to hiding
Basecoat Material Usage	-	0.38 gallons
Clearcoat	-	Diamont DC90 2:1 with DH51 hardener
Clearcoat Application	-	Two wet coats
Clearcoat Usage	-	0.83 gallons

Film Thickness -

	SIDE	HOOD
Basecoat	1.0 Mils	0.7 Mils
Clear	1.9	2.8
	2.9	3.5

Volume Ratio Clearcoat : Basecoat = 0.83:0.38 = 2.18:1

B. HVLP Spray Gun

Basecoat	-	Diamont Blue Metallic reduced 1:0.75 with BR60 reducer
Gun	-	Mattson DC set at 6.0 PSI
Basecoat Application	-	Two medium coats
Basecoat Material Usage	-	0.32 gallons
Clearcoat	-	Diamont DC90 2:1 with DH51 hardener
Clearcoat Application	-	Two medium coats
Clearcoat Usage	-	0.69 gallons

Film Thickness -

	SIDE	HOOD
Basecoat	0.6 Mils	0.6 Mils
Clear	2.1	2.9
	2.7	3.5

Volume Ratio Clearcoat : Basecoat = 0.69:0.32 = 2.16:1

2. Spot Repair

One of the most widely used technique for painting a panel with minor damage is to "spot" repair the area. In the case of spot repair, one of the most critical qualities the refinish coating must possess is the ability to be applied in such a fashion that results in the repair area being undetectable from the surrounding original finish in all facets of appearance; including color, metallic orientation, texture and gloss. The most popular procedure for spot repairing a basecoat/clearcoat finish is to color coat only the portion of the panel that was damaged and then, in order to maintain gloss and texture, clear coat the entire panel.

The following technique was used to simulate a "spot" repair on a vehicle at our Whitehouse, Ohio facility.

A. Spot prime a 2 x 2 foot area on a rear quarter panel to simulate the damaged area.

B. Color coat with basecoat the "repair" area, blending out into undamaged portion of the panel.

C. Clearcoat the entire panel.

The following represents material usage of basecoat and clear for the above process.

Basecoat	-	Diamont Blue Metallic reduced 1:0.75 with BR60
Clearcoat	-	DC90 clear 2:1 with DH51
Basecoat Usage	-	0.0186 gallon
Clearcoat	-	0.068 gallons

Clearcoat: Basecoat Usage = 0.68:0186 = 3.61:1

CONCLUSION

For BASF, and probably all other coating suppliers, the 2:1 ratio of clearcoat to basecoat used on calculations for combined basecoat/clearcoat V.O.C. actually represents an understatement of clearcoat usage. Since, to my knowledge, no commercial basecoats meet the topcoat V.O.C. requirements of either Option I (5.2 V.O.C.) or option II (4.5 V.O.C.), we feel the topcoat V.O.C. requirements in the proposal without allowing basecoat/clearcoat averaging do not represent reasonably attainable control technology. The proposal should therefore either be modified to allow averaging, or the V.O.C. standards for topcoats should be raised to minimum of 6.2 pounds/gallon.

II. Option II, even with basecoat/clearcoat averaging allowed, does not meet the criteria of Reasonably Attainable Control Technology (RACT) in the area of Pre-Treatment Wash Primer and Topcoats, as the proposal is based on unavailable technology in both areas.

- Pre-treatment requirement of 5.5 pounds/gallon V.O.C. is not available. Current technology is in the 6.0-6.5 range and chemistry used for this type of product does not readily lend itself to lower levels.

- Topcoat V.O.C. of 4.5 pounds/gallon is not currently attainable for either metallic single stage colors or multi-stage topcoat systems even with numerical averaging allowed for the multi-stage systems.

Recommendation

Option II does not represent RACT and therefore should not be considered as an alternative. Option I is acceptable, provided multi-stage V.O.C. averaging is allowed.

III. Several questionable assumptions were made in determination of Emission Estimation Techniques in Section 4.0. These lead to a gross overstatement of material usage and subsequently leave one to believe the industry contributes far more V.O.C. than it actually does.

A. Section 4.2.1 (Page 4-3) states "The assumption is made that all coating mixed for the job is sprayed and therefore no emissions are attributed to waste paint." The last thing a painter wants to happen is to run out of paint in the middle of a job. As a consequence, standard practice is to reduce at least 25% more material than what is required and to scrap the overage. Since by law the remaining material is a hazardous waste, it is usually disposed of by incineration and consequently, does not contribute to V.O.C. in the atmosphere.

B. The film thickness stated in Section 4.2.1 (Pages 4-5) are overstated compared to what BASF recommends for finishes in each category. The following represents our recommendations compared to what is stated in the draft.

FILM THICKNESS REQUIRED

	DRAFT	BASF RECOMMENDATION
Pre-Treatment/Pre-Coat	1.0 Mils	0.3-0.5 Mils
Primer Surfacer	2.25 Mils	2.0 Mils
Primer Sealer	1.75 Mils	1.0-1.5 Mils
Topcoat	3.5 Mils	2.0-3.5 Mils

C. Table 4-2 (Pages 4-6) grossly overstates paint consumption for each of the coating categories.

1. The table suggests 1.6 gallons of pre-coat or pre-treatment primer is used for a complete paint job. By definition pre-treatment and pre-coat are only used over bare metal areas of the job. Unless the repaint is over a completely stripped surface, only 3-6 oz. would normally be used. Even if the job was complete bare metal, pre-treatment/pre-coat usage would not exceed 0.4 gallons!

2. Table suggests primer surfacer usage to be 1.2-2.0 gallons for complete paint job. Normal practice is to only apply over poor substrate. Under this condition only approximately 8 oz. would be utilized. If complete job were to be primed usage would be 0.5-1.0 gallons, depending on quality of primer used.

3. Table suggests sealer usage of 0.8-1.5 gallons. Normal practice would be to use approximately 0.25 gallons of sealer on a complete repaint.

4. Table suggests 2.2-3.8 gallons of topcoat consumed for a complete paint job. Actual usage is 1.2-1.75 gallons.

5. Baseline data for topcoat paint consumption given in Table 4-2 (Pages 4-6) is contradictory to that given in Table 4-3 (Pages 4-10). Topcoat usage per car in Table 4-2 is 2.2-3.8 gallons. Table 4-3 states 1.8-3.8 gallons.

Conclusion

Data presented in Section 4.0 is not accurate and grossly overstates the baseline V.O.C. contribution for all categories of shops in the study. Therefore, any of the analysis utilizing this data as a baseline is suspect. This includes both economic and emission reduction analysis that are presented in the draft.

MINOR ISSUES

I. Transfer Efficiency

The draft acknowledges the benefits of High Volume Low Pressure spray equipment in reducing V.O.C. due to higher transfer efficiency than what can be achieved by conventional air assisted spray. However, transfer efficiency is not incorporated in the CTG as the author felt it would be difficult to control due to variability of factors such as coatings used, shape of part and operator skill. We acknowledge that the actual transfer efficiency will be the result of a host of variables such as operator skill, size and shape of part and surrounding air velocities. However, under any conceivable condition there will always be significant advantages in reduced paint usage with HVLP vs. conventional air atomized application. This will range between 20-45% reduction in material usage.

Recommendation

We suggest transfer efficiency be incorporated into the CTG, if not at the upper level the document should acknowledge at least a 20% reduction in paint consumption and with that magnitude of V.O.C. reduction require the use of HVLP or comparable high transfer efficiency spray equipment.

II. Section 2.5.1 (Pages 2-12) states Convention Airless Spray is the standard method of applying coatings in the refinish industry. This is a mis-characterization, as to my knowledge, no refinish shops utilize airless spray. The conventional means of application is air atomized spray.

III. Section 3.5.3 promotes the use of Biofiltration as a cost effective alternative for V.O.C. control in the automobile refinish industry. Although the technology appears to have potential merit, the fact is it has never been, to my knowledge, trialed let alone proven for spray applied coatings. Obviously, this approach needs considerable investigation and should not at this time be considered as representing reasonably attainable control technology.

Recommendation

Remove any reference to Biofiltration from the CTG unless evidence is available the technology meets the requirements of RACT.

We acknowledge and appreciate the efforts of the EPA staff who worked on the preparation of the September 27, 1991 Draft for Automotive Refinishing Control Techniques Guideline. The purpose of this letter is not to antagonize their efforts, but rather to point out serious concerns with critical portions of the text. My desire and those of my colleagues on the Refinish Coalition is to aid in the development of a fair and reasonable CTG for our industry. If you or any other members of your staff wish to have further discussions on the issues prior to the November 21, 1991 NAPCTAC meeting, feel free to contact me.

Sincerely,

BASF CORPORATION
Coatings & Colorants Division

Robert J. Inglis
Director Product Planning

RJI/sep
pc: D. Guyomard
H.J. Robinson
R. Sappok

COMMITTEE DISCUSSION ON INDUSTRY PRESENTATION

Bob Inglis, BASF Corporation (See attached Presentation #2)

Ms. McIntire inquired where BASF's estimate that HVLP spray equipment can improve TE by 20-45 percent came from. Mr. Inglis said it was determined through investigations and in practice. Transfer efficiency does vary by operator and by gun, however, so you can't just categorize an HVLP gun. In fact, the same thing applies to conventional guns. Ms. McIntire then asked if TE is measured by paint consumption. The answer is yes. Ms. McIntire asked if a standard were to require a certain TE, would shops be required to maintain records of paint use before and after using HVLP guns. Mr. Inglis responded that would be one approach. There is a definite correlation between paint use and use of HVLP equipment, and you could establish a ratio. Operator variability would be the same in either case.

Ms. McIntire asked if manufacturers would be willing to help small shops in measuring TE. She also inquired as to how a baseline would be set. Mr. Inglis responded that manufacturers would be willing to work with EPA in setting a baseline. He noted that HVLP does improve TE and this should be recognized.

Mr. Berry requested that Mr. Inglis define "compliant high TE spray equipment." He noted that California only says to use HVLP, which he has heard has difficulty breaking up high-solids coatings. California requires the use of HVLP or electrostatic, and other types of spray equipment are required to prove they can achieve 65 percent TE. The question was raised about why HVLP does not have to prove 65 percent. California is now in the process of conducting laboratory tests to allow equipment manufacturers to prove that their equipment can achieve 65 percent TE, at which point it will be approved for use. Mr. Berry stated that HVLP is "directionally" correct, but TE cannot

be quantified. Further, someone who already has high TE with conventional spray equipment would not get credit, while a careless painter who does not get good TE would get the credit merely because he uses HVLP.

Mr. Dennison noted that the definition of HVLP is still an open issue in California. Mr. Berry pointed out that as you reduce air pressure, the painter has to stand closer to the part being painted. This in itself improves TE. Further, high air flows in spray booths adversely affect HVLP TE. Mr. Inglis noted that the same is true if you use conventional spray equipment.

In reference to the comment that EPA overestimated paint use, Ms. McIntire asked how film thickness is measured. Mr. Inglis replied that there are measuring devices (gauges) that are easy to use. Mr. Jordan asked whether a painter could achieve the very thin mil thicknesses that the coating manufacturers recommend. Mr. Inglis replied that they could. Mr. Jordan noted that he knew from experience that paint shops do not use the small amounts cited by BASF.

Mr. Taranto observed that the coating manufacturers raise some good questions about the baseline data and estimated emission reductions. He requested that EPA work with industry on this issue, especially because the Coalition's projections are very different from EPA's. Mr. Inglis noted that the baseline data are important, but the coating manufacturers are primarily interested in developing a meaningful, liveable CTG.

Mr. O'Sullivan asked whether the statement is correct that even in small shops the extra 25 percent of paint that is mixed is incinerated and whether coating manufacturers offer this service. Mr. Inglis replied that BASF does not offer this service but the Resource Conservation and Recovery Act (RCRA) requirements must be followed by shops.

Mr. Dennison noted that the discussion of using the topcoat averaging equation seems to indicate that the basecoat limit is too strict and the clearcoat limit is lenient. How could compliance be determined if the standard was based on averaging? The answer is by recording coating usage. Mr. Dennison noted

that it would be very difficult for a regulating agency to determine compliance solely based on coating usage. EPA should strive to profile the industry as best as possible and minimize recordkeeping. Shops should only be required to show that they use compliant coatings, regardless of how much they use.

safety-kleen.

November 5, 1991
JPK 91-296

Mr. Bruce Jordan
Director of Emissions Standards Division (MD-13)
Office of Air Quality Planning and Standards
U.S. EPA
Research Triangle Park, NC 27711

Dear Mr. Jordan:

REF: Draft Document -- Automobile Refinishing Control Techniques Guidelines Dated September 27, 1991

On behalf of Safety-Kleen, I would like to thank the U.S. EPA Advisory Committee for the opportunity to comment publicly on the proposed Automobile Refinishing Control Techniques Guidelines.

Safety-Kleen is a company dedicated to the recovery and recycling of solvents, thereby reducing the environmental impacts of the manufacture of new materials and the potential environmental impacts of disposal.

We would like to submit the following comments for consideration in a final CTG:

A) Spray Gun and Equipment Cleaner Variations

One of our products, the Model 1107 Paint Gun and Equipment Cleaner, is referred to in the CTG under discussion. In Section 2.6 -- Cleaning Equipment -- the draft CTG discusses two types of gun cleaners -- an enclosed gun cleaner, and an open gun cleaner.

In reference to the enclosed gun cleaner, the draft CTG discusses "closed" without complete definition of the meaning of the word "closed". The enclosed gun cleaners currently available are "closed" only in that they have a lid. They do not provide a vapor-tight closure, as implied in the discussion. Additionally, enclosed gun cleaners are available in two significantly different variations:

1) In the simplest configuration, an enclosed gun cleaner uses only recirculated solvent and rinses the passages, ports and exterior of the paint gun and paint cup. This configuration does not provide a final rinse of virgin material to assure that residuals are purged from the fine passages and ports of the paint gun.

777 BIG TIMBER ROAD ELGIN, ILLINOIS 60123 PHONE 708/697-8460 FAX 708/697-4295

2) An alternate version of an enclosed gun cleaner contains a second reservoir which allows for a final rinse of clean material. The clean material is then mixed with the recirculated material and used until che it is too contaminated for further use.

The Safety-Kleen Model 1107 described in figure 2-4 in the draft CTG, provides for both recirculated gross cleaning of the spray gun and cup and for a clean solvent rinse of the gun and cup to minimize the potential for contamination of subsequently used paint.

It is important to note that test data provided to the U.S. EPA and gathered by an independent third party with supervision by the South Coast Air Quality Management District of California, indicated that the use of an open gun cleaner, specifically the Safety-Kleen Model 1107, resulted in emissions that were significantly less than several gun cleaners that were identified as enclosed systems.

There is a third type of system available which uses line pressure to purge a spray gun and cup that has been reviewed by the South Coast Air Quality Management District and is, I believe, also allowed by its regulations. This system is manufactured by Lighthall Industries, and may be of interest to the Agency for inclusion in the CTG.

B) <u>Paint Cups</u>

In Section 2.6, reference is made to the use of plastic, rather than metal paint pots, for spray gun cleaning with the indication that plastic may be easier to clean than metal surfaces. This suggestion may, in fact, be misleading in that several polyethylene plastic paint pots can become crazed over time and be, in fact, more difficult to clean. Further, there are several metal paint pots currently available with Teflon coating on the interior. The Teflon-coated paint pot is extraordinarily easy to clean and allows for very efficient drainage of solvents after cleaning, maximizing solvent recovery.

C) <u>Automatic Vs. Manual Systems</u>

In Section 2.8.2, entitled "Model Shop Equipment", reference is made to the presence or absence of "automatic gun cleaning equipment". We suggest that the use of the word "automatic gun cleaner" is exclusive of the two aforementioned manual products. We suggest that the use of the words "gun cleaning system" be included, and exclude the potentially misleading adjective "automatic". The use of the word "automatic" or "automated" appears throughout several portions of the draft CTG, and we request that it be corrected throughout the draft. Furthermore, single-stage, automatic closed units may require a final rinse with clean solvent that is necessarily done external to the unit.

D) Vapor Tight

In Section 6.2, Definitions, the definition for gun cleaner states: "A device made specifically to clean paint from spray guns which recirculates solvent to clean a succession of times and is vapor-tight when in use."

No gun cleaner on the market today is vapor-tight when in use. Even the described enclosed gun cleaners are not vapor-tight and emit significant amounts of volatile organic compounds when they are being used and subsequent to use. These losses can be described as "active" losses during use and "passive" losses when the product is not being used. Data supplied to the Agency has indicated that the use of open systems, such as the aforementioned Safety-Kleen Model 1107, are, in fact, more efficient in reducing emissions in both the active and passive phases.

We suggest that the definition of gun cleaner read: "A device made specifically to clean paint from spray guns which recirculates solvent to clean a succession of times and minimizes the loss of solvent into the atmosphere through a recovery technology".

E) RACT Considerations

In Section 6.6.2, Gun Cleaners, under Section 6 -- Factors to Consider When Implementing Reasonably Available Control Technology -- four suggestions are made to states:

- It is suggested that states approve only those gun cleaners that:
  1) Recirculate the solvent used during the cleaning process, so that the solvent is used to clean a number of guns before being disposed;
  2) Collect the spent solvent in a manner than insures it is available for disposal;
  3) Are vapor-tight during the cleaning process;
  4) Meet applicable fire, safety, and occupational safety and health codes, laws, and regulations both in design and in the manner in which it can be used.

- State regulations should specify that the facility is accountable for spent solvent from the gun cleaner. It must not be allowed to evaporate. Documentation must be available to support that it has been released to a licensed reclaiming or hazardous waste management facility.

Point three requires a system be vapor-tight during the cleaning process. This is not consistent with the suggested definition for a gun cleaner hereinabove, but, more importantly, it is not consistent with comments made in Section 3.4, Emission Reductions From Gun Cleaning, in which the Agency indicates that equipment is currently available that

can reduce solvent consumption, evaporation, and worker exposure. The Agency further suggests that gun cleaners can be enclosed or open and cites a report obtained during the CTG investigation that some open gun cleaners emitted no more VOC's than enclosed gun cleaners.

F) Health Considerations

It is important to note that the use of enclosed gun cleaners, when compared to open gun cleaners, may pose significant exposure and health effects that are solved with certain open systems. In this regard, an open system, such as the Safety-Kleen Model 1107, may be both safer to the user and less damaging to the environment. (See attached ENSR study on Evaluation of Worker Exposure to Organic Vapors while Operating Paint Spray Gun Cleaners.)

Should the Agency require clarification of any of the above comments, I would be happy to elaborate. I plan to attend the meeting on the draft Auto Body Refinishing CTG Document on November 21, 1991.

Once again, thank you for the opportunity to participate in the development of this CTG.

John Paul Kusz
Manager, Product Development

JPK/pj

Encl.

cc: CAATF
Mike Callahan
Jim Sanseverino
REG/TEST/U.S. EPA

COMMITTEE DISCUSSION ON INDUSTRY PRESENTATION

John Kusz, Safety Kleen (see attached Presentation #3)

Mr. O'Sullivan asked if there is any estimate of the percentage of small shops that deliver their spent solvent to reclaiming facilities. Mr. Kusz said it is hard to give a definitive answer. The numbers are expected to be different in different regions, e.g., the percentage would be greater in California and in more commercial areas. Mr. O'Sullivan wanted to know what percent of the market Safety-Kleen services. Mr. Kusz preferred not to make that public knowledge, but said that some information has already been provided to EPA.

Industry Presentation #4

PRESENTATION OF

THE

NATIONAL AUTOMOBILE DEALERS ASSOCIATION

BEFORE THE

U.S. ENVIRONMENTAL PROTECTION AGENCY

BY

DOUGLAS I. GREENHAUS

SENIOR ATTORNEY, REGULATORY AFFAIRS

ON

NOVEMBER 21, 1991

Good morning. My name is Douglas I. Greenhaus and I am the Senior Attorney for Regulatory Affairs for the National Automobile Dealers Association (NADA). It is my pleasure to appear before you today to present NADA's views on the U.S. Environmental Protection Agency's (EPA) draft Automobile Refinishing Control Techniques Guideline (CTG).

NADA is a national trade association representing over 19,000 franchised car and truck dealers across the country. NADA members are primarily engaged in the retail sale of new and used motor vehicles, both foreign and domestically produced. NADA members are also engaged in automotive service repair and parts sales.

EPA's draft CTG on automotive refinishing is of considerable importance to the automobile dealership body. NADA's Industry Analysis division estimates that dealership automobile and truck refinishing operations account for roughly one third of all autobody sales. In addition, approximately sixty percent of new vehicle dealerships operate formal autobody repair and painting operations. In total, it is estimated that dealership autobody departments employ some 103,000 people in 13,500 facilities with an average of 8 employees per department.

The average NADA dealership employees 40 persons in total. In addition, over eighty percent of NADA's members are considered small businesses by the Small Business Administration. Given that

the refinishing CTG will substantially impact small business refinishing operations, NADA is actively working with EPA on the development of guidelines for the implementation of Section 507 of the Act.

NADA previously provided EPA with information in order to assist with the CTG development process. In early 1988, NADA submitted the results of a comprehensive membership survey of paint and coating material use rates. Earlier this year, NADA submitted comments on EPA's Revised Summary of Automotive Refinishing Model Shop Emission Costs. The following comments specifically address the September 27 draft CTG.

A. Surface Preparation

NADA supports the inclusion of controls on surface preparation products. However, NADA submits that EPA significantly underestimates the costs associated with using lower solvent content preparation materials. It is clear that the use of these materials will take some amount of applicator retraining and will require additional time to achieve the same benefits as higher solvent content counterparts. EPA fails to include these significant costs in its analysis.

With respect to emissions reduction, NADA suggests that the draft CTG fails to consider whether lower solvent content surface preparation materials aren't used in greater quantities. EPA also

fails to recognize that solvent volatilization is proportionate to the amount of time the preparation product remains on the surface and to recognize that not all of the VOC's in higher solvent content materials become airborne prior to being wiped off the surface being prepared. In summary, EPA overstates the emissions baseline for surface preparation materials.

B. Coating Applications

NADA supports the two option approach to paint system regulation. However, NADA is very concerned about the values EPA has selected. Obviously, the values selected for each option are of critical importance to the refinishing industry. Without proper paint system quality and color match capability, auto refinish operations will be unable to adequately service their customers. NADA suggests that EPA consider adopting the values set out in the California Air Resources Board Regulation and endorses the National Paint and Coating Association's comments on that issue.

Lower solvent content coating systems are expected to require considerable applicator retraining. In addition, it is expected that surface areas will take longer to paint and that drying times will be longer. All of these important costs must be factored into EPA's impact analysis.

NADA strongly supports EPA's decision not to include a transfer efficiency requirement in its CTG. On the otherhand, EPA

must recognize <u>some</u> VOC emissions reduction benefits attributable to those shops using improved transfer efficiency. It is reasnable to expect that, as reformulated paint systems become more costly, facility operators will begin to turn to higher transfer efficiency equipment in order to reduce costs.

EPA's discussion of higher transfer efficiency fails to reflect the significant retraining costs involved and the potential for longer painting times, both of which are critical factors to the refinishing industry.

C. <u>Gun Cleaning</u>

NADA supports the inclusion of a gun cleaning requirement in the CTG. At the same time it is clear that EPA overestimates the baseline for this option and thus the potential for emissions reduction. A significant and increasing source of gun cleaning solvent results from the in-house distillation of waste paint and solvent materials. To count this recycled solvent in an emissions baseline would be redundant. Likewise, the cost savings shown by EPA for gun washers is also erroneous in light of the use of recycled gun wash solvent.

It is also inappropriate for EPA to assume that all the spent solvent used to clean guns is fully evaporated in those shops which do not use gun cleaners. Whether destined for on-site distillation or off-site management, spent gun wash is not left to totally

evaporate in the typical automotive refinishing facility.

D. Add-On Controls

NADA strongly objects to the inclusion of add-on controls in the proposed CTG. EPA's impact analysis shows that add-on controls are not currently available for the automotive refinishing industry. In addition, EPA's data show add-on controls to be from six (carbon adsorption) to over fourteen (incinerator) times as expensive as surface coating system solvent control alternatives. On the other hand, add-on controls result in, at best, only a marginally superior reduction in VOC emissions.

EPA's suggestion that states require multiple shops to refinish in a single add-on control equipped facility verges on the ludicrous. While this creative concept might conceivably make the capital and operating costs more "reasonable," theoretical savings would be overshadowed by transportation costs, scheduling nightmares, competition concerns, etc.

Again, all references to add-on controls must be deleted from the proposed CTG as they are clearly not "reasonably available control technologies" for this industry.

E. Other

a. Housekeeping Practices

NADA has long supported good refinishing housekeeping

practices. Keeping containers closed and minimizing the amount of materials used is good for business as well as for the environment.

Throughout its proposed document, EPA refers to the proper management of waste paint and solvent materials. NADA objects to EPA's repeated reference to off-site waste management options as somehow being important to the CTG. Instead, EPA should include a suggested prohibition against the intentional on-site disposal-through-evaporation of waste paint and solvent materials. Furthermore, there is no reason to believe that waste sludges or distillation residues pose any VOC emission concerns. The discussion of waste management, including recordkeeping, should be dropped from the CTG as these materials are already covered under applicable federal and state solid and/or hazardous waste regulations.

b. Reporting and Recordkeeping

NADA strongly objects to EPA's suggested recordkeeping and reporting requirements as having no relationship to VOC control. Daily logs or records would be terribly burdensome for the small business automotive refinishing community. In the alternative, EPA should simply suggest that states require refinishers to keep copies of their preparation, paint system, and solvent purchase invoices, and the repair order documentation normally kept in the ordinary course of business. Analysis of these normal business records would provide regulatory authorities

with more than adequate information for both administrative and enforcement purposes.

c. Miscellaneous

NADA urges EPA to edit its draft CTG document to remove a number of irrelevant discussions including the reference to reducing the number and severity of collisions, and the discussion of electrostatic spray equipment.

EPA's model regulation has a reference to "aftermarket automobiles." This term is certainly not commonly understood in the industry and its purpose is unclear. While there may be a need to distinguish between OEM painting operations and automotive refinishing, it makes no sense to try to define coverage of the rule based on where vehicles were purchased.

EPA's model regulation should apply to light duty vehicles as defined in its mobile source regulations and should exclude heavy duty vehicles. The reference to and definition of light and medium duty trucks is inconsistent with other Clean Air Act definitions.

On behalf of NADA I would like to thank you for the opportunity to comment on this matter. At this time, I would welcome any questions you might have.

COMMITTEE DISCUSSION ON INDUSTRY PRESENTATION

Douglas Greenhaus, National Automobile Dealers Association (NADA)
(see attached Presentation #4)

Mr. Hise asked how common is distillation of waste/spent solvent. Mr. Greenhaus said it is not that common, but it is increasing. The use of distillation units avoids off-site liability disposal and reduces hazardous waste disposal costs. Distilled solvent can be used in gun cleaners (but it is not pure enough to mix in paint). Mr. Hise asked if these units are readily available to shops. Mr. Greenhaus said they are; there are at least 12 distributors, and some facilities share them.

Dr. Atkins asked if NADA completely supports the California regulation. Mr. Greenhouse responded NADA does not support the regulation for recordkeeping or TE. In color match issues, they defer to the coating manufacturers.

Mr. Dennison recommended that NADA explore the possibility of multiple shops sharing an add-on control device. Mr. Greenhaus said they would, but that this practice is not done at all, and is not "reasonable" for consideration as RACT. He was not aware of any NADA members that have add-on control devices, and NADA would not support the use of add-on controls for any size shop because the costs are just too high.

Dr. Atkins asked if Mr. Greenhaus was aware of many odor complaints. Mr. Greenhaus replied that they occasionally hear of shops getting inspected because of odor complaints but most dealerships are located in non-residential areas. Mr. Berry noted that non-dealership facilities could be located in residential areas. Mr. Greenhaus agreed that smaller, independent shops are more likely to be located in residential areas.

Industry Presentation #5

PRESENTATION/COMMENTS OF
PPG INDUSTRIES AUTO REFINISH COATINGS GROUP
CONCERNING AUTOBODY REFINISHING CTG DRAFT

BY

R. T. HILOVSKY

MANAGER, REGULATORY AFFAIRS

AUTOMOTIVE, AIRCRAFT & FLEET FINISHES

- NAPCTAC Meeting - November 21, 1991

- Automotive Refinish CTG Draft

Thank you for the opportunity to address this subject today.

As a supplier of coatings systems, information and training to the Auto Refinish Industry and an active participant in the NPCA Auto Refinish Coalition, PPG Industries strongly supports the positions, objectives, and recommendations of the NPCA Coalition position paper.

-Objective: Development of national consistent VOC regulations with real, effective, achievable VOC emission reductions.

-Recognition & incorporation of industry practice and operating realities into effective regulations.

-Selection of the RACT VOC limits of the California Clean Air Act Guidance for the Refinish Industry as the RACT limits for the CTG.

-Topcoat limits recognizing multi-stage basecoat/clearcoat or tri-coat averaging as necessary to achievable VOC systems reductions.

-The recognition of the systems nature of Refinish products and processes.

-Acknowledgement of the necessity and utility of low-volume usage speciality coatings.

-The effective reductions achievable through the trained use of improved transfer efficient application equipment and techniques.

-Systems Nature of Auto Refinish Coatings Operations

-Product chemistries as they develop require constant testing to determine over and under what other coating components and substrates these products are compatible

**[Attached overhead transparencies here to demonstrate systems]

-New material developments and raw material substitutions for supply/economic reasons as well as regulation mandates require retesting and qualification within the individual manufacturer's total system.

-Knowledge of competitive changes is not available as to type or timing.

-Use of total product systems with their background testing history allows consistent use, application, and productivity recommendations to be made and trained.

-Total systems allow thorough technical service support, complaint handling, and approved application warranties. This better assures that recommended reductions, blends and application techniques are consistently followed, to maintain and assure the guarantee and minimize job re-do's or come backs.

-Training

Achievement of the desired VOC reductions from any regulation is best attained by the consistent, trained usage of compliant materials and methods by an applicator confident in the products, equipment and achievement of the desired end result in system appearance, performance and productivity.

Auto Refinish systems manufacturer/suppliers are the primary, consistent and continuing source of training to the industry.

- -Product Systems Introduction and Training
- -Coating Systems Application Options
  - -Printed recommendations and hands-on training
- -Regulatory Requirements
  - -OSHA safety and right to know
  - -Hazardous waste disposal guidelines
  - -VOC emission reduction
- -Product/Process Productivity

CA Guidance RACT is fully accepted, trainable and in training now.

Thank you for your time and attention, and I would welcome any questions you may have.

A final comment before I conclude, the conclusion that transfer efficiency is not easily quantifiable due to product, part and process variability, and thus cannot be assigned a baseline % value, seriously contrasts with the assigned 35% T.E. value for conventional air spray used in calculations in the draft CTG. 35% T.E. is the maximum achievable for air spray, which is certainly subject to all the same variables. A reasonable improved T.E. baseline average can be established from product usage/purchase records.

SUITABILITY OF ONE PRIMER UNDERCOAT OVER ANOTHER

1ST COAT \ 2ND COAT	DL 1970	DZL	DPE 656	DPE 1202	DPE 1338	DPE 1538	DZ 3, 7	DPU 35/301	DP Epoxy/401	DP 48 Epoxy/401	DX 1791/1792	DAS 1980/1987	KTS 30/201	K 200/201	K 36/201	KTS 47	DPU 1970	DPU 1971	DPU 1972	DPU 1973	DPU 1974	DPU 1975	DPU 1976	DPU 1977	DPU 1978	DPU 1979	DPU 1980	DPU 196	KTS 47
DL 1970	E	E	G	G	G	G	G	E	-	-	-	-	-	-	-	-	-	-	-	-	-	-	-	VG	-	-	VG	-	
DZL 32, 34, 72	E	E	G	G	G	-	G	-	-	-	-	G	-	-	-	-	-	-	-	-	-	-	-	VG	-	-	VG	-	
DPE 656	-	-	E	VG	VG	-	-	G	G	G	-	-	-	-	G*	VG*	-	-	-	-	-	-	-	VG	-	-	VG	-	
DPE 1202	-	-	E	VG	VG	-	-	G	G	G	-	-	-	-	G*	VG*	-	-	-	-	-	-	-	VG	-	-	-	-	
DPE 1338	-	-	E	VG	VG	-	-	G	G	G	-	-	-	-	G*	VG*	G	-	-	-	-	-	-	VG	-	-	VG	-	
DPE 1538	E	E	E	E	E	E	-	G	-	-	-	-	-	VG	VG*	-	-	-	-	-	-	-	-	VG	-	-	-	-	
DZ 3, 7	E	E	G	G	G	-	E	G	VG	VG	-	E	G	-	-	-	-	-	-	-	-	-	-	VG	-	-	E	-	
DPU 35/301	-	-	-	-	-	-	-	E	VG	VG	-	E	-	VG	E	E	-	-	-	-	-	-	-	VG	-	-	-	-	
DP Epoxy/401	VG	VG	VG	VG	VG	-	E	E	E	E	-	E	E	E	E	E	-	-	-	G	G	E	-	E	VG	VG			
DP 48 Epoxy/401	VG	VG	VG	VG	VG	-	E	E	E	E	-	E	E	E	E	E	-	-	-	G	G	E	-	E	VG	VG			
DX 1791/1792	-	G	VG	VG	VG	VG	VG	E	E	E	E	-	VG	VG	VG	VG	-	-	-	-	-	VG	-	-	-	-			
DAS 1980, 1987	-	VG	G	G	G	G	E	E	E	E	-	E	G	-	-	-	-	-	-	-	-	-	-	-	E	-			
KTS 30/201	-	-	-	-	-	-	G	-	VG	VG	-	-	E	E	E	E	-	-	-	-	-	-	-	-	-	-			
K 200/201	G	-	E	E	E	E	-	VG	E	E	-	VG	E	E	VG	VG	-	VG	VG	G	G	-	G	-	-	-			
K 36/201	-	-	VG	VG	VG	VG	-	VG	E	E	-	VG	E	VG	E	VG	-	VG	VG	G	G	-	G	VG	-	-			
KTS 47																													

*FULL PANEL ONLY!

10/40

SUITABILITY OF ONE PRIMER UNDERCOAT OVER ANOTHER

1ST COAT \ 2ND COAT	[illegible]	[illegible]	[illegible]	[illegible]	[illegible]	[illegible]	[illegible]	[illegible]	[illegible]	[illegible]	[illegible]
NCP 250/255	-	-	G	G	G	G	-	VG	E	E	-
DP 70/701	-	-	-	-	-	-	-	E	G	G	-
DPX 800	-	VG	-	-	-	-	VG	-	-	-	-
DPX 844	-	-	-	-	-	-	-	-	-	-	-
DPW 1811, 1832	-	-	-	-	-	-	-	-	-	-	-
DPW 1821	-	-	-	-	-	-	-	-	-	-	-
DPW 1844	-	-	-	-	-	-	-	-	-	-	-
Preet 33	-	-	-	-	-	-	VG	-	VG	VG	-
DX 54	-	-	-	-	-	-	-	-	E	E	-
DSX 1900	E	E	VG	VG	VG	-	E	-	-	-	-

1ST COAT \ 2ND COAT	[illegible]	[illegible]	[illegible]	[illegible]	[illegible]	[illegible]	[illegible]	[illegible]	[illegible]	[illegible]	[illegible]	[illegible]	[illegible]	[illegible]	[illegible]	[illegible]
NCP 250/255	VG	E	VG	VG	E	-	VG	VG	-	-	-	-	VG	-	-	
DP 70/701	-	VG	VG	VG	-	E	-	-	-	-	VG	-	-	-	-	
DPX 800	-	E	VG	VG	VG	-	E	-	-	-	-	-	-	-	-	
DPX 844	-	E	VG	VG	VG	-	-	E	-	-	-	-	-	-	-	
DPW 1811, 1832	-	G	-	-	-	-	-	-	E	E	-	-	-	-	-	
DPW 1821	-	-	-	-	-	-	-	-	G	E	-	-	-	-	-	
DPW 1844	-	-	VG	VG	-	-	-	-	-	-	-	E	-	-	-	
Preet 33	-	VG	-	-	-	-	-	-	-	-	-	-	-	-	VG	
DX 54	-	-	-	-	-	-	-	-	-	-	-	-	E	-	-	
DSX 1900	E	-	-	-	-	-	-	-	-	-	E	-	-	E	-	

*FULL PANEL ONLY!

1071

COMPATABILITY OF TOPCOATS OVER VARIOUS UNDERCOATS

	Duracryl DDL Basecoat	Duracryl DDL	Ditzco DQE	Ditzo DQE/ DXE 123	Delstar DAR	Delstar/ Delthane DAR/ DXR 80	Starthane STAR		Starbase DSB	Deltron DAU	Deltron 2000 Basecoat DBC	Deltron Basecoat DBU	Concept 2K DCC	Durethane DU	Delta	UCV Vinyl Color
K200/201	-	-	G	E	VG	VG	G		G	G*	G*	E	G	G	-	-
K36/201	-	-	-	-	-	VG	VG	-	G	VG*	G*	E	E	G		- -
NCP 250/ 256	-	-	-	-	-	VG	VG		G	VG*	G*	E	VG	G	-	-
KTS 30/201	-	-	G	G	E	E	E		VG	E	E	E	E	E	E	-
DX 54	E	E	E	E	E	E	E		G	E	VG	VG	VG	E	G	E
DPX 844#	VG	E	-	G	-	VG	VG		G	VG	VG	VG	VG	E	-	-
DPX 800	E	E	-	-	-	VG	VG		-	E	VG	VG	-	-	-	E
DSX 1900	E	E	-	-	-	-	-		-	-	-	-	-	-	-	-
DPW 1832, 1811	-	-	-	-	G	G	G		G	VG	G	G	G	G	E	-
DPW 1821	-	-	-	-	G	G	G		-	G	G	G	G	G	G	-
DPW 1844#	-	-	-	-	G	G	G		G	VG	G	VG	-	G	G	-
KTS 47																

Topcoat must be flexed with appropriate product.
*Product must be sealed with KTS 30, DP/401 reduced as a sealer, or DAS 1980, 1987.
" Must be sealed with KTS 30 or DP/401 reduced as a sealer.

COMPATABILITY OF TOPCOATS OVER VARIOUS UNDERCOATS

	Duracryl DDL Basecoat	Duracryl DDL	Ditzco DQE	Ditzco DQE/ DXE 123	Delstar DAR	Delstar/ Delthane DAR/ DXR 80	Starthane STAR		Starbase DSB	Deltron DAU	Deltron 2000 Basecoat DBC	Deltron Basecoat DBU	Concept 2K DCC	Durethane DU	Delta	UCV Vinyl Color
DL 1970	E	E	-	-	G	G	G		-	-	-	-	-	-	-	-
DZL 32, 34, 72	E	E	G	G	G	G	G		-	-	-	-	-	-	-	-
DPE 656	-	-	E	E	E	E	E		VG	-	-	-	-	G	-	-
DPE 1202	-	-	E	E	E	E	E		G	-	-	-	-	G	-	-
DPE 1338	-	-	E	E	E	E	E		G	-	-	-	-	G	-	-
DPE 1538	-	-	E	E	E	E	E		-	-	-	-	-	VG	-	-
DZ 3, 7	E	E	VG	VG	E	E	VG		VG	VG*	G*	E	G*	-	-	-
DAS 1980, 1987	VG	VG	VG	VG	E	E	VG		VG	VG	G	VG	VG	-	-	-
DP/401	E	E	VG	VG	E	E	E		E	E	VG	E	E	E	E	-
DX 1791/ 1792	-	-	-	VG	-	VG	VG		-	VG	-	-	G	VG	E	-
DPU 35/301	-	-	G	G	VG	VG	VG		-	E	-	-	-	E	G	-
Preet 33	E	E	-	-	E	E	E		-	E	G	VG	-	E	-	E

Topcoat must be flexed with appropriate product.
*Product must be sealed with KTS 30, DP/401 reduced as a sealer, or DAS 1980, 1987.
° Must be sealed with KTS 30 or DP/401 reduced as a sealer.

1043

COMMITTEE DISCUSSION ON INDUSTRY PRESENTATION

Ron Hilovsky, PPG Industries (see attached Presentation #5)

Mr. Hise asked whether the EPA's assumed TE of 35 percent was accurate for the industry today as an average. Mr. Hilovsky responded that conventional spray equipment has a TE of 25-35 percent, while the CTG gives 35 percent as an average for conventional spray equipment.

The Sherwin-Williams Company
101 Prospect Avenue, N.W.
Cleveland, Ohio 44115-1075

- National Air Pollution Control Techniques Advisory Committee Meeting November 21, 1991 at Durham, NC
- Guidance document for Automotive Refinishing CTG

NAPTAC Committee Members:

I appreciate the opportunity to address this committee today.

We recognize the need to reduce VOC emissions to improve air quality due to not only the need to comply to the Clean Air Act but to create a healthy environment for all of us. In doing so you take into consideration environmental and economic impacts. In this regard I would like to tell some background information on the automotive refinish industry.

The industry is responsible for the repair and refinish of the average person's second largest asset - his car. (This follows only the home as a person's single largest asset.)

The industry represents the classic small business profile for the United States. The following facts from the "Market Profile 1991" Body Shop Business (a widely read and highly regarded trade publication) represent the industry:

- 77.2% of body shops are family owned (20.2% of those are second generation),
- Currently 2 family members work full time in the body shop,
- The average body shop has approximately 7 employees,
- 45.5% of workers refinishing automobiles are paid hourly,
- 53.4% of body shops generate less than $250,000 in annual sales,
- Average gross profit margin is 25.0% (This translates to less than $62,500 in gross profit per year).

The reason I bring your attention to these facts is that we take great care in our recommendations for RACT. And for how we design new technology for the future.

I would also like to bring to your attention the heart of the refinish industry - color. The ability to restore a vehicle to its "pre-collision condition" is absolutely essential. The restoring of a vehicle to OEM specification for quality and performance is necessary and expected. But the color match dictates whether a customer will accept a repair. If the repair is evident to color mismatch, the vehicle has to be done again and at a loss. To give you a feel for the complexity of todays colors I have brought the following.

- '92 Domestic Car Color Chip Book,
- Alternate color formulas program,
- Repaired panels
- Blending - visual demonstration

As you can see, there are literally thousands of colors required to refinish all of todays vehicles. And complex color matching is required for today's colors. We are sensitive to their needs of providing a quality and warranteed system that they can use right the first time. Again this impacts our recommendation for RACT.

The draft document for the automotive refinish CTG does not take into account the use of a composite VOC for basecoat/clearcoat colors. Attached to my presentation is our company's documentation where the composite calculation of

$$VOC_{BB/CC} = \frac{VOC_{BC} + 2\,VOC_{CC}}{3}$$

is derived from. In our test we simulated a medium size repair (replace fender and blend door) and large repair (replace front fenders and hood, blend into doors). We also used a Low Volume Low Pressure gun, a high solids clearcoat, and a high VOC basecoat color. This combination represents a worst case scenario (ie - low amount and VOC of clearcoat, high VOC basecoat color, and low volume of material due to high transfer efficient application equipment). The results are still within the composite VOC calculation. To sum up the results (details are attached):

- The ratio of 2:1 for clearcoat to basecoat is based in material by volume not dry film thickness. Actual is 2.4:1 for a medium repair and 2.6:1 for a large repair.

- The predicted VOC for the composite VOC calculation is understated by 2.2% of actual VOC emissions for a medium repair and understated by 0.6% of actual VOC emissions for a large repair.

The calculation is accurate and represents the VOC emissions of a basecoat/clearcoat system. With the flexibility to use this composite VOC calculation we are free to turn loose our Research and Development department to lower VOC emissions of a basecoat and/or clearcoat. This will encourage innovative solutions to reduce VOC emissions at the lowest cost. Without this flexibility the VOC limits proposed (contained within the draft CTG) are not RACT. No system, to the best of my knowledge, exists that can commercially meet the proposed VOC limits.

RACT is defined as "the lowest emission limitation that a particular source is capable of meeting by the application of central technology that is reasonably available considering technological and economic feasibility". And it takes into account a particular source's "technological and economic circumstances". In your RACT determination we ask you to recognize our efforts to think and act as an industry: refinishers and shop managers/owners, distributors, equipment suppliers and coatings manufacturers. Our efforts are designed to move our industry to lower their VOC emissions but yet preserve the integrity and complexion of the industry by keeping costs low.

In our considerations we as an industry have been required to weather the technological advances of the Unibody, on board computer equipment, increased OEM warranty periods, and basecoat/clearcoat/three stage finishes. These advances required new technology and training, as well as capital investment for new equipment. All at a time of decreased amount of issuance dollars.

The RACT recommendations we make are sensitive to the small business in the aftermarket collision repair industry. We have worked together to draft reasonable rules. We make the recommendation to use California's Technical Review Group's recommendation for RACT. It encompasses the goals of industry and regulators into a common target. Our focus in not to stop at RACT. We have set our ambitious program to go further.

I would like to make an additional comment. Hercules approached me about how their gun cleaner fit into the CTG. I believe the attached document should be reviewed as its results are contrary to some of the information in the draft CTG.

Again I appreciate your time and the hard work of many here to get to where we are today. The incorporation of our suggestions ensures a workable document for the United States and tomorrow.

Basecoat/Clearcoat VOC Calculation

- **VOC BC/CC Premise:** The VOC emissions from a repair of an OEM basecoat/clearcoat by an aftermarket refinish basecoat/clearcoat can be accurately represented by the following calculation:

$$VOC_{BC/CC} = \frac{VOC_{BC} + 2\,VOC_{CC}}{3}$$

This premise is based on allowing a basecoat with accurate color match capability that will allow smaller blends, prevent "re-do's" due to inaccurate color match, and that the volume of the clearcoat to basecoat is a minimum of 2:1.

- **Test Protocol:**

—Test

Spray two repairs that represent an "average[1]" (1-2 panel) and large[2] repair (2 or more panels) (Small repairs[3] - a panel or less represents the lowest VOC emission and consequently will not be done). See attached diagram.

—Equipment:

Iwata LPS (Low Volume Low Pressure restricted to maximum 10.0 psi at tip).

—Topcoat System:

BC)—UltraBase 7® Basecoat Color with BCS-600V (Test Color: '91 General Motors Code 22 Light Sapphire Blue Metallic UB-35879).

CC)—Ultra 7000® High Solids Urethane Booth Clearcoat CC-850.

1 Average—Involves up to replacement of 1 panel (such as a fender), applying basecoat to fender and blending color into clear to hide any potential color mismatch. This is followed by applying clearcoat to fender and door.

2 - Large repair—Involves up to replacement of front end (such as a severe front end collision), applying basecoat to both fenders, hood, and blending into doors (to hide any potential color mismatches). This is followed by applying clearcoat to two fenders, hood, and both doors.

3 - Small repair—Involves applying basecoat to small spot (usually less than 1 panel) and blending out into rest of panel. This is followed by applying clearcoat to entire panel. If color match is good, generally the amount of basecoat color used is small compared to clearcoat usage.

- **RESULTS**

	Basecoat	Clearcoat	
—Mixing Ratio	1:1 UB-35879:BCS-600V	4:2:1 CC-850:CC-R854:CC-H858	
—VOC (Sprayable)	6.07 #/gal	4.38 #/gal	
—Wt/Gal (Sprayable)	7.66 #/gal	8.13 #/gal	
—Usage [1] Medium repair	3.4 oz.	8.2 oz.	Ratio: 1:2.4
—Usage [1] Large repair	12.1 oz.	31.6 oz.	Ratio: 1:2.6
—Actual VOC emissions			
Medium repair	0.16 #	0.28 #	Total: 0.44 #
Large repair	0.58 #	1.08 #	Total: 1.66 #
—Predicted VOC emissions [2]			
Medium repair	—	—	Total: 0.45 #
Large repair	—	—	Total: 1.67 #

1 Usage —

	Medium Repair (~ 14 sq. ft.)	Large Repair (~ 44 sq. ft.)
BC	92.3g (3.4 oz.)	329.5g (12.1 oz.)
CC	234.8g (8.2 oz)	909.3g (31.6 oz.)

2 $VOC_{BC/CC} = \frac{VOC_{BC} + 2\,VOC_{CC}}{3}$

COMMITTEE DISCUSSION ON INDUSTRY PRESENTATION

Greg Ocampo, Sherwin Williams (see attached Presentation #6) [Note: There was no committee discussion of attachment to Presentation #6]

In response to a question by Dr. Atkins about the 1992 California limits, Mr. Ocampo said they would be hard to meet in a shop that did not have a heated spray booth because the clearcoat would dry very slowly. Some coatings that can meet the 1992 limits are not currently "reasonably available," but may be in a few years. Mr. Ocampo stated that he supports the CARB 1990 limits as RACT.

Mr. Hise asked how the right color is selected. Mr. Ocampo replied that spectrophotometers work for solid lighter colors. However, even then they are only used for guidance; all color matches are done by eye.

In response to another speaker's comment that color match would only be hard with the Option 2 topcoats, Mr. Ocampo said that all coating manufacturers agree that without being able to use the basecoat/clearcoat averaging equation, metallic topcoats could not meet either option.

Attachment to
Industry Presentation #6

Herkules

Phone: 313-363-8882
WATS: 1-800-444-4351
FAX: 313-363-7998
Telex: 231238

Herkules Equipment Corporation

8230 GOLDIE ST. • WALLED LAKE, MI 48390-4108

November 11, 1991

United States Environment Protection Agency
Office of Air Quality Standards Division
Research Triangle Park, N.C. 27711

Attention: Mr. Bruce C. Jordan
Director Emission Standards Division

Subject: Draft Sept. 27, 1991
Automobile Refinishing
Control Techniques Guideline
(Gun Cleaning)

Dear Mr. Jordan,

Our copy of the draft was delayed in being received due to a zip code change and was only reviewed this past weekend, hence we are too late to obtain time for a presentation. According to Mary Jane Clark, you can distribute copies of this letter to the committee.

Our firm holds the basic patents on the predominate type of enclosed gun washers found in body shops both here in the USA as well as in most countries abroad identified in your draft in Section 2.6 on page 2-15 and pictured in Figure 2-3 which is commonly referred to as an Automatic-Enclosed Gun Cleaner. To help NAPCTAC we would like to place before the committee some additional information which is related to paint gun washing and "latest applicable technology" for cleaning of paint guns and related equipment. To accomplish this objective, a distinct differentiation is made between Automatic-Enclosed Gun Cleaners (Figure 2-3) and the "typical open gun cleaner" described in Section 2.6 page 2-17 and pictured in Figure 2-4 also known as a Manual-Open Gun Cleaner. The major differences are compared below:

Differences	Automatic-Enclosed	Manual-Open
1. Closed during cleaning	yes	no
2. Cleans guns without worker direct participation	yes	no
3. Cleans multiple guns, cups, stirrers, strainers and other paint related equipment simultaneously	yes	no
4. Cleans inside and outside of guns simultaneously	yes	no
5. Workers are exposed to solvents during cleaning cycle	no	yes

Much of the draft seems to paint both Automatic-Closed and Manual-Open Gun Cleaners with the same brush. This overlooks key issues such as solvent consumption, worker exposure, cleaning cycle time, other items which must constantly be cleaned along with the paint gun and simultaneous multiple gun cleaning all of which impact on the VOC emission and worker exposure.

As a part of the "improved housekeeping practices" referred to in Section 3.1 page 3-1, Automatic Enclosed Gun Cleaners can play an important role. They affect radically the amount of time required for cleaning guns, cups, stirrers, strainers, etc. reducing worker direct exposure to solvents while limiting potential escape of V.O.C. Over the old methods of cleaning, they significantly reduce solvent usage and the amount of solvent which must be maintained at the shop. Virtually all of the tools and related items which need constant cleaning including strainers, stirrers, and mixing vessels can be cleaned in the automatic gun cleaner at the same time the guns are being cleaned eliminating the need for multiple open containers for various cleaning functions.

We take issue with the final paragraph in section 3.4 page 3-10 implying that "Open Gun Cleaners emit no more VOC than Enclosed Gun Cleaners." The report referred to was submitted to SCAQMD in order to obtain a variance allowing manual-open gun washers to be used in Southern California. The report was paid for by the waste hauler owning the rental equipment; the test itself varied from the testing procedure recommended by the SCAQMD, and did not reflect knowledgeable usage of the competitive units, totally ignored multiple equipment cleaning which is essential and used antiquated competitive models.

With reference to Section 4.3.1. page 4-14, it is possible that minimal solvent could be emitted from closed gun cleaners, but this possibility was virtually eliminated long ago by a redesign of the lid. (See Attachment No. 1). All Herkules manufactured or licensed units have or will have soon incorporated this feature.

The issue of escaping V.O.C., 4.3.1 page 4-14, during the loading (no hose connections are required in our standard automotive Automatic-Enclosed Gun Cleaners) is a valid concern and can be addressed two ways. The first way is through education and the second way is through the use of a speed controlled lid opener and closer.

Proper opening of the lid on any solvent container requires education. The worker does not want to create any more suction during opening and no more fanning of fumes during closing than necessary. Hence the industry needs instruction. A sample of such instruction for <u>any</u> vessel containing solvent could read as follows:

<u>CAUTION:</u>

READ BEFORE OPENING

Solvent fumes are normally heavier than air and if not disturbed will remain in the container. To prevent fumes from escaping, open and close lid slowly.

1. Open lid about one inch to equalize the pressure inside and outside. Then open slowly, this mimimizes the escape of fumes through suction.

2. Do not slam lid during closing, lower lid slowly to prevent fanning which can cause fumes to escape.

In the Definitions Section 6.2 page 6-3 under the heading <u>Gun Cleaner</u>, reference is made to being "vapor tight"; no gun cleaners in common use are 100% vapor tight. In fact, if they were vapor tight chances of fume emission would be increased during loading and the cleaner could become dangerous under pressure as the content in most cases are extremely volatile. For this reason, we believe Sections 6.2 page 6-3, 6.6.2 page 6-10 and Appendix D, page D-3 <u>Gun Cleaners</u> and Appendix D page D-5 <u>Equipment Standards</u> (d) (1) (iii) need modification to read "reasonably vapor tight" not "vapor tight."

We are continuously trying to improve the design and application of cleaning equipment to provide both the autobody repair and industrial paint industries with "state of the art" equipment. The draft does not take into consideration the latest models of automatic-enclosed cleaning equipment which have solved many of the VOC emission problems, for example:

	Features	Herkules Models Containing Features	Result
1.	Double barrier lid design.	All Herkules models	Reduction of VOC emissions during both active and passive states.
2.	Speed controlled lid opener and closer.	GWR-100-SS GWR-3-100-SS CWR-4-100-SS	Reduction of VOC emissions during loading and unloading.
3.	Hose cleaning for pressure gun fluid lines.	GWR-3 GWR-3-100-SS CWR-31 CWR-31-100-SS	Reduces solvent needed for fluid line cleaning, VOC emission and the need for open solvent containers during cleaning.
4.	Paint can and paint lid cleaning.	CWR CWR-1 CWR-31 CWR-31-100-SS CWR-4 CWR-4-100-SS	Allows paint cans to be reused as mixing or storage containers, reducing solid waste generated in the form of paint sludge. Converts quart, gallon and 5 gallon cans considered hazardous to non-hazardous reducing disposal costs and reducing the amount of paint which is sent to hazardous dump sites, inside cans.
5.	Combination gun and paint can washing.	CWR CWR-1 CWR-31 CWR-31-100-SS	One cleaner cleans both guns, cups, stirrers, strainers, etc and paint cans/lids.

In a world of constant change, obviously it is impossible to take all available technology into consideration before approving the guidelines. With minor adjustments to the draft including more specific wording on Automatic-Enclosed versus Manual-Open Gun Washers and changing the concept of "vapor tight" to "reasonably vapor tight" the document should become an acceptable guideline.

Yours very truly,

Richard A. Robb
President

RAR/lw

ATTACHMENT No. 1

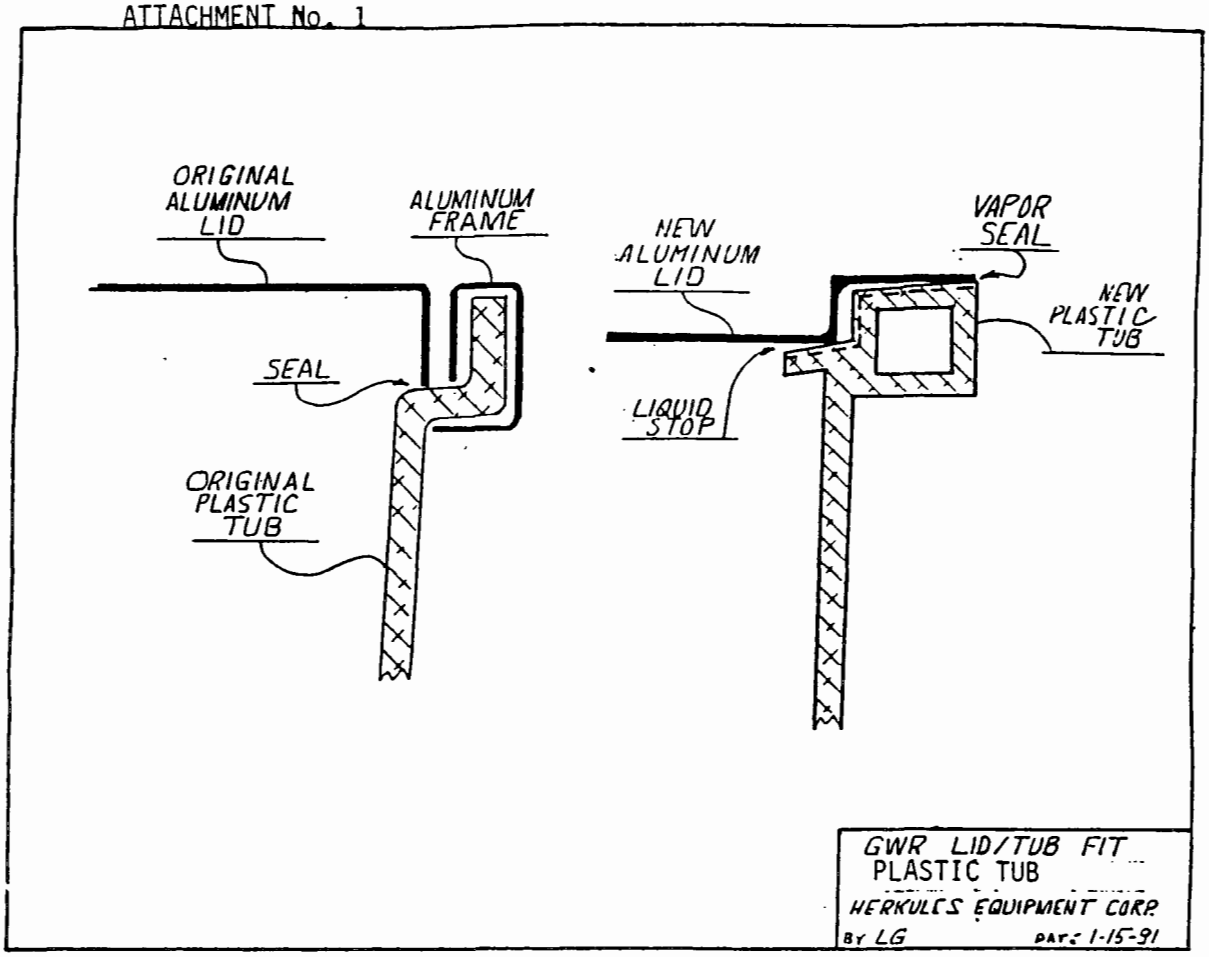

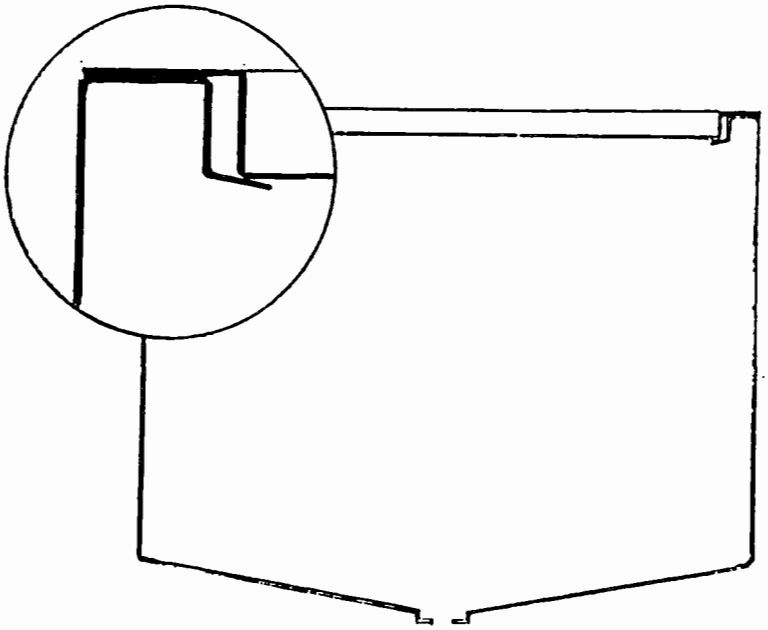

DOUBLE SEAL LID DESIGN
STAINLESS STEEL TUB

BY LG

Comments & Observations Of Automotive Refinishing CTG Document

1055

GRACO 1991

GRACO INC.
MINNEAPOLIS, MN

Total Paint Thickness Applied by OEM

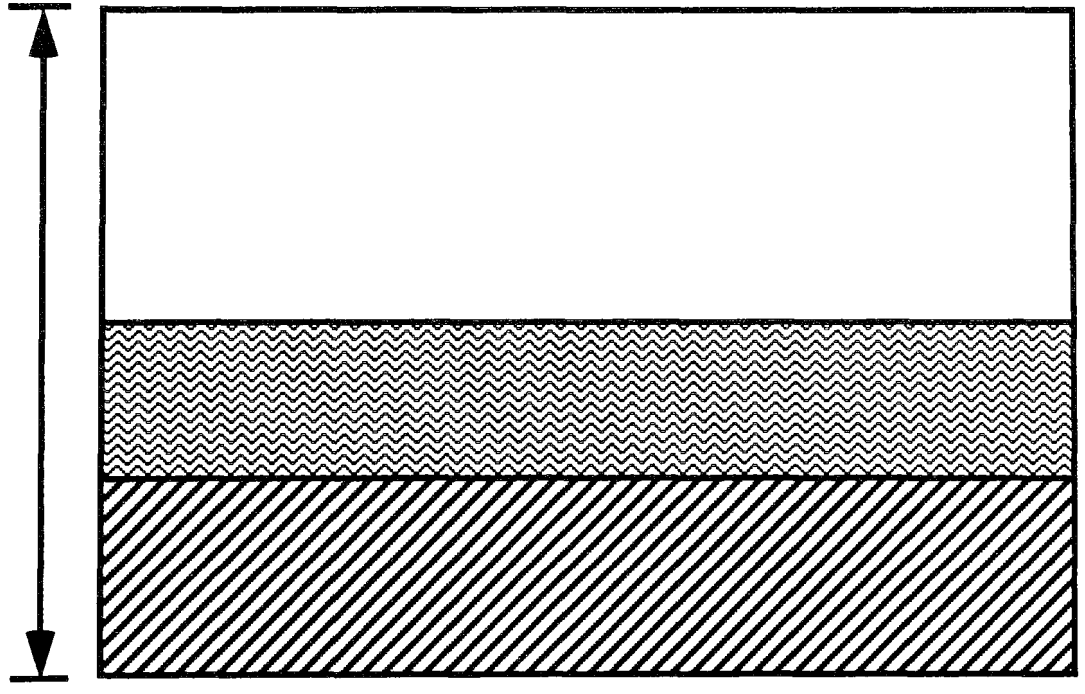

GRACO 1991

OEM Prefers Electrostatic Application

- 75-80% of all coatings currently applied are electrostatic
- Including:
  - ✓ 80% of all <u>primers</u>
  - ✓ 95% of all <u>clearcoat</u>
  - ✓ 40% of all <u>basecoat</u>

1057

Graco Test Comparisons of T.E. in Spray Forms Show That in Refinish Industry

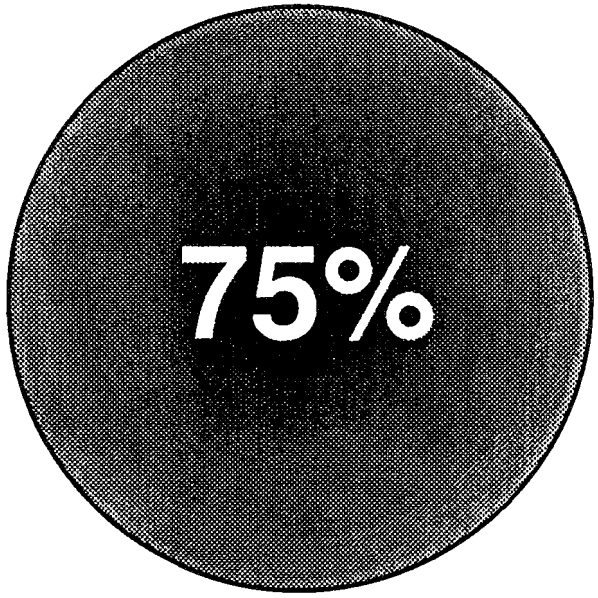

Electrostatic
Hits the target with 75% efficiency

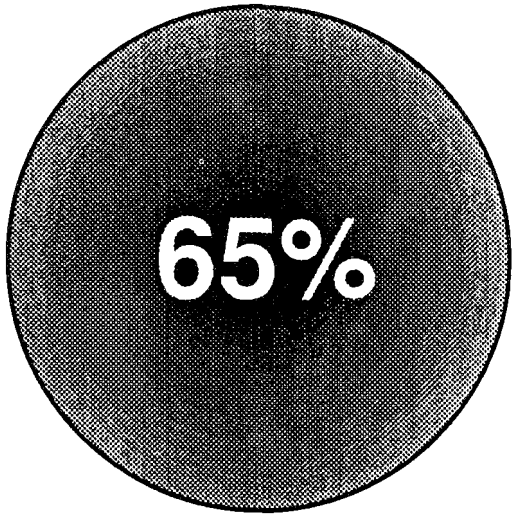

HVLP
Hits the target with 65% efficiency

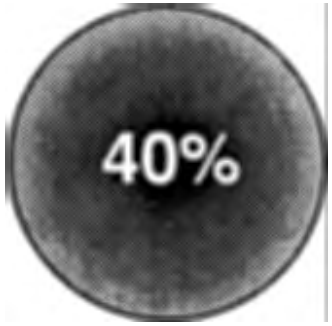

Airspray
Hits the target with 40% efficiency

...Because of very low flowrates

GRACO 1991

1058

When Using Electrostatic Application Throughout the Automotive Refinish Process

- **Basecoat color match is more accurate and readily achieved**
- **Application is easier**
- **Greater efficiency results, which translates to faster payback of electrostatic gun**

EXAMPLE: 10 week payback of $4100 electrostatic unit shop type E-H)

1.92 Gallons/Day (savings) X $42.50/Gallon X 50 Days = $4080

GRACO 1991

Herkules

Phone: 313-363-8882
WATS: 1-800-444-4351
FAX: 313-363-7998
Telex: 231238

Herkules Equipment Corporation

8230 GOLDIE ST. • WALLED LAKE, MI 48390-4108

November 11, 1991

United States Environment Protection Agency
Office of Air Quality Standards Division
Research Triangle Park, N.C. 27711

Attention: Mr. Bruce C. Jordan
Director Emission Standards Division

Subject: Draft Sept. 27, 1991
Automobile Refinishing
Control Techniques Guideline
(Gun Cleaning)

Dear Mr. Jordan,

Our copy of the draft was delayed in being received due to a zip code change and was only reviewed this past weekend, hence we are too late to obtain time for a presentation. According to Mary Jane Clark, you can distribute copies of this letter to the committee.

Our firm holds the basic patents on the predominate type of enclosed gun washers found in body shops both here in the USA as well as in most countries abroad identified in your draft in Section 2.6 on page 2-15 and pictured in Figure 2-3 which is commonly referred to as an Automatic-Enclosed Gun Cleaner. To help NAPCTAC we would like to place before the committee some additional information which is related to paint gun washing and "latest applicable technology" for cleaning of paint guns and related equipment. To accomplish this objective, a distinct differentiation is made between Automatic-Enclosed Gun Cleaners (Figure 2-3) and the "typical open gun cleaner" described in Section 2.6 page 2-17 and pictured in Figure 2-4 also known as a Manual-Open Gun Cleaner. The major differences are compared below:

Differences	Automatic-Enclosed	Manual-Open
1. Closed during cleaning	yes	no
2. Cleans guns without worker direct participation	yes	no
3. Cleans multiple guns, cups, stirrers, strainers and other paint related equipment simultaneously	yes	no
4. Cleans inside and outside of guns simultaneously	yes	no
5. Workers are exposed to solvents during cleaning cycle	no	yes

Much of the draft seems to paint both Automatic-Closed and Manual-Open Gun Cleaners with the same brush. This overlooks key issues such as solvent consumption, worker exposure, cleaning cycle time, other items which must constantly be cleaned along with the paint gun and simultaneous multiple gun cleaning all of which impact on the VOC emission and worker exposure.

As a part of the "improved housekeeping practices" referred to in Section 3.1 page 3-1, Automatic Enclosed Gun Cleaners can play an important role. They affect radically the amount of time required for cleaning guns, cups, stirrers, strainers, etc. reducing worker direct exposure to solvents while limiting potential escape of V.O.C. Over the old methods of cleaning, they significantly reduce solvent usage and the amount of solvent which must be maintained at the shop. Virtually all of the tools and related items which need constant cleaning including strainers, stirrers, and mixing vessels can be cleaned in the automatic gun cleaner at the same time the guns are being cleaned eliminating the need for multiple open containers for various cleaning functions.

We take issue with the final paragraph in section 3.4 page 3-10 implying that "Open Gun Cleaners emit no more VOC than Enclosed Gun Cleaners." The report referred to was submitted to SCAQMD in order to obtain a variance allowing manual-open gun washers to be used in Southern California. The report was paid for by the waste hauler owning the rental equipment; the test itself varied from the testing procedure recommended by the SCAQMD, and did not reflect knowledgeable usage of the competitive units, totally ignored multiple equipment cleaning which is essential and used antiquated competitive models.

With reference to Section 4.3.1. page 4-14, it is possible that minimal solvent could be emitted from closed gun cleaners, but this possibility was virtually eliminated long ago by a redesign of the lid. (See Attachment No. 1). All Herkules manufactured or licensed units have or will have soon incorporated this feature.

The issue of escaping V.O.C., 4.3.1 page 4-14, during the loading (no hose connections are required in our standard automotive Automatic-Enclosed Gun Cleaners) is a valid concern and can be addressed two ways. The first way is through education and the second way is through the use of a speed controlled lid opener and closer.

Proper opening of the lid on any solvent container requires education. The worker does not want to create any more suction during opening and no more fanning of fumes during closing than necessary. Hence the industry needs instruction. A sample of such instruction for <u>any</u> vessel containing solvent could read as follows:

<u>CAUTION:</u>

READ BEFORE OPENING

Solvent fumes are normally heavier than air and if not disturbed will remain in the container. To prevent fumes from escaping, open and close lid slowly.

1. Open lid about one inch to equalize the pressure inside and outside. Then open slowly, this mimimizes the escape of fumes through suction.

2. Do not slam lid during closing, lower lid slowly to prevent fanning which can cause fumes to escape.

In the Definitions Section 6.2 page 6-3 under the heading <u>Gun Cleaner</u>, reference is made to being "vapor tight"; no gun cleaners in common use are 100% vapor tight. In fact, if they were vapor tight chances of fume emission would be increased during loading and the cleaner could become dangerous under pressure as the content in most cases are extremely volatile. For this reason, we believe Sections 6.2 page 6-3, 6.6.2 page 6-10 and Appendix D, page D-3 <u>Gun Cleaners</u> and Appendix D page D-5 <u>Equipment Standards</u> (d) (1) (iii) need modification to read "reasonably vapor tight" not "vapor tight."

We are continuously trying to improve the design and application of cleaning equipment to provide both the autobody repair and industrial paint industries with "state of the art" equipment. The draft does not take into consideration the latest models of automatic-enclosed cleaning equipment which have solved many of the VOC emission problems, for example:

	Features	Herkules Models Containing Features	Result
1.	Double barrier lid design.	All Herkules models	Reduction of VOC emissions during both active and passive states.
2.	Speed controlled lid opener and closer.	GWR-100-SS GWR-3-100-SS CWR-4-100-SS	Reduction of VOC emissions during loading and un-loading.
3.	Hose cleaning for pressure gun fluid lines.	GWR-3 GWR-3-100-SS CWR-31 CWR-31-100-SS	Reduces solvent needed for fluid line cleaning, VOC emission and the need for open solvent containers during cleaning.
4.	Paint can and paint lid cleaning.	CWR CWR-1 CWR-31 CWR-31-100-SS CWR-4 CWR-4-100-SS	Allows paint cans to be reused as mixing or storage containers, reducing solid waste generated in the form of paint sludge. Converts quart, gallon and 5 gallon cans considered hazardous to non-hazardous reducing disposal costs and re-ducing the amount of paint which is sent to hazardous dump sites, inside cans.
5.	Combination gun and paint can washing.	CWR CWR-1 CWR-31 CWR-31-100-SS	One cleaner cleans both guns, cups, stirrers, strainers, etc and paint cans/lids.

In a world of constant change, obviously it is impossible to take all available technology into consideration before approving the guidelines. With minor adjustments to the draft including more specific wording on Automatic-Enclosed versus Manual-Open Gun Washers and changing the concept of "vapor tight" to "reasonably vapor tight" the document should become an acceptable guideline.

Yours very truly,

Richard A. Robb
President

RAR/lw

ATTACHMENT No. 1

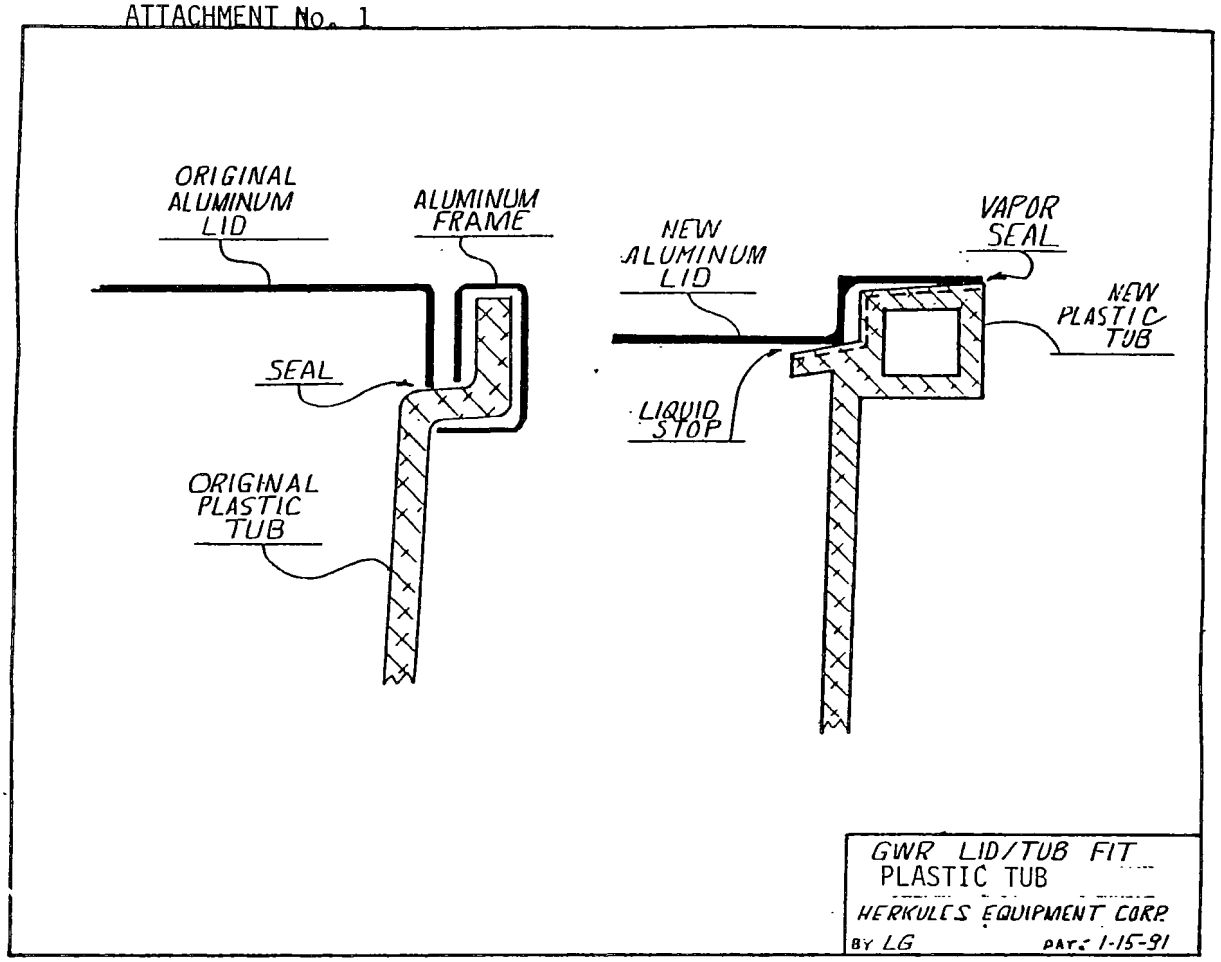

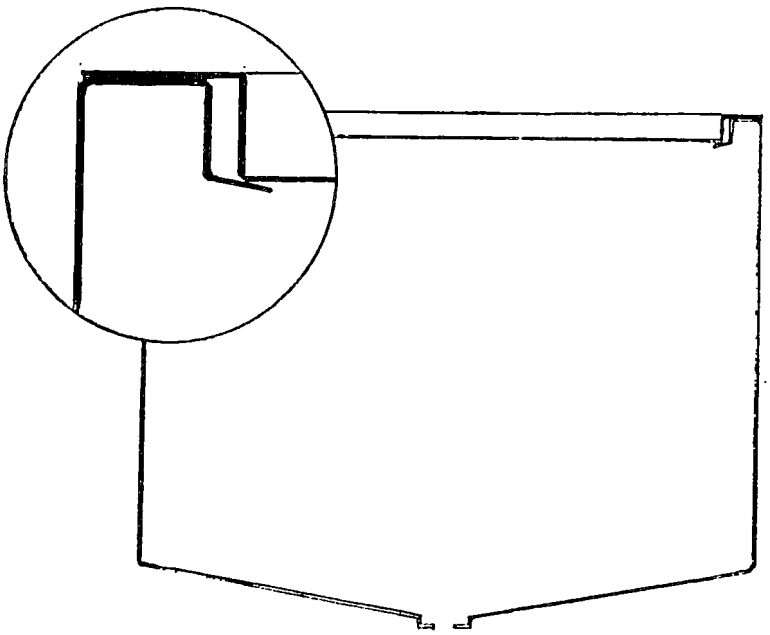

DOUBLE SEAL LID DESIGN
STAINLESS STEEL TUB

4:

Gene

DU PONT

AUTOMOTIVE PRODUCTS
Technology and Planning
Wilmington, Delaware 19898

November 14, 1991

Mr. Bruce C. Jordan
Director, Emission Standards Division (MD-13)
Office of Air Quality Planning and Standards
U.S. Environmental Protection Agency
Research Triangle Park, NC 27711

Dear Mr. Jordan:

COMMENTS ON THE AUTOMOBILE
REFINISHING CONTROL TECHNIQUES GUIDELINE
DRAFT FOR NAPCTAC REVIEW ON 11/21/91

It is recognized that the subject draft guidance is in its early stages of development and therefore subject to various changes. Once it is completed and acted on by the various states, it will forever change how the refinishing industry does business and the kind of quality product and costs it can deliver to the ultimate customer, the consumer. It is therefore very important that EPA's guidance document accurately describes the industry, what VOC reductions can be reasonably achieved, and that it is factual. These comments are given in the hope that what is presented here will help in that regard.

In general, the draft guidance document as a whole makes a good descriptive representation of the industry. The analysis given is quite complete and substantially correct. Some treatments, however, have to be questioned and should be modified, corrected, changed, or described more fully. First some comments of a general nature that will be followed by specific comments on the various sections in the document.

EPA is aware of the Suggested Control Measure (SCM) that has been developed by the California Air Resources Board (CARB) for the refinish industry for the more stringent requirements for ozone attainment under the California CAA. The SCM establishes RACT and BARCT guidance after a long process of evaluation and interactions with the industry. Du Pont supports the SCM and has developed refinish systems to meet the RACT guidance. As the BARCT requirements are technology forcing, we are expending all of

Better Things for Better Living

our R&D efforts to satisfy the BARCT guidance for refinish repair systems. The refinish industry is a highly distribution intensive industry with the added responsibility of the paint suppliers having to train body shop operations in the use of new, lower VOC repair systems required for SCM based regulations in California. It is only logical and cost effective to have equal requirements established in other jurisdictions. It is readily apparent that 30 or 50 different VOC requirements across the nation requiring different technologies for each VOC level of repair systems, and the thousands of color match developments, would be beyond the capability of any paint supplier, no matter how large. It is therefore very surprising to find the draft CTG document not acknowledging the work done by CARB or the existence of the SCM. It is our belief that RACT established in the SCM is in fact appropriate to be RACT for the CTG applied nationally. The BARCT standards in the SCM are technology forcing and therefore do not constitute RACT for the proposed CTG.

It is true that Du Pont, as well as our competitors, are supporting the SCM standards and R&D work is currently in place to deliver repair paint systems with the specified VOC limits. Whether they can be achieved by us, or anybody else, only time will tell. Inventions cannot be mandated by a certain date. Should EPA consider using BARCT standards as an option for a possible RACT standard, there are two difficulties. By definition, BARCT is not RACT. Secondly, were state agencies or air districts to adopt such standards into their SIPS, they become law and cannot be relaxed. Should industry fail to achieve these technology forcing standards by a certain date mandated, what then? Do body shops cease to operate in that jurisdiction? For this scenario, it is necessary that the CTG provide for some mechanism of alternatives until such technology can be demonstrated.

The subject draft guidance assumes that technology transfers (from high VOC systems to lower VOC systems, to waterborne systems, etc.) can be readily made without extensive operator training, process changes, change in productivity, change in quality, color match capability, more frequent re-repair, or the cost structure beyond the change in price for a gallon of paint purchased. Such uneven treatment is very unfair and very misleading and should be corrected. In fact, a lot of these effects will force a lot of the marginal shops to go out of business. This will cause a realignment of body shop numbers, size and type. Competitive pressures will drop for the surviving shops and costs will skyrocket for the consumer to get his vehicle repaired. Insurance rates will rise significantly as well. As an example of one effect: In the proposed Option 2 level controls in the draft guidance the suggested limits for certain categories of coatings will dictate the

use of waterborne technology. For primer surfacer waterborne types have been recently introduced into Los Angeles because of technology forcing regulations. Topcoats have not been demonstrated in this industry to date, contrary to the implied availability in the draft document. In any event, it can already be shown that waterborne primers require 2 to 3 times the time to process; that is, to apply, to dry, to sand, and time to topcoat than solvent borne coatings. The quality of the finish also changes. Only time will tell whether such repairs will hold up to expected performance standards, or more re-repairs will not be necessary. This situation is already causing a realignment of body shops in the LA area. Even if waterborne topcoats were to be available, the same impacts would also apply. One would have to add the questions of color match, aluminum flake gassing tendencies, and performance properties. It is obvious that this draft guidance does not develop these issues and therefore does not caution agencies as to the inherent difficulties that technology forcing standards could present for the industry as well as the agency's ability to achieve claimed VOC reductions.

Dividing the industry into eight arbitrary model body shop segments pigeonholes the industry to a degree that might not apply in actual fact. (It is difficult to say that a particular shop size uses 25% lacquer or 75% lacquer. A lot of times his customer base dictates what he will use.) Such categorization could mislead state agencies into making misguided assumptions about emission inventories, reductions that can be achieved, or the regulatory levels that should be set.

The draft guidance make a good case for the effectiveness of using high transfer efficiency (TE) to achieve VOC reduction. In fact, they could be substantial, far beyond reductions that can be achieved through coating reformulations, and in combination could provide drastic reductions of VOC from this industry. Use of high T.E. equipment is also very cost effective as the draft points out. However, then the draft backs out because its use is not readily verifiable. This position should be reconsidered by EPA. It is just as verifiable as running an incinerator, absorption unit, or biodegradation unit. They all have variability that must be accounted for. Some procedure must be provided, if only through mass balance accounting, to allow for T.E. credit. EPA allows this procedure for large sources, then why not for these small sources. (See also comments below for Section 3.3.2.)

Add-on controls, as Option 3, are dealt with quite evenly in the draft guidance. Whether the cost estimates are low, high or about right is not at issue. The analysis plainly shows that they are prohibitive for this industry.

Adoption of Option 3 as the control method would drive 3/4 of the body shops out of business. Option 3 should be kept, however, as an alternate means of compliance for future situations. As the body shop population changes, or add-on technology gets refined, add-on controls could become a viable option for body shops. Other than costs, this draft implies that add-on controls are easy and viable for this industry. What the guidance does not point out is that it has never been demonstrated in a commercial situation. The difficulty with this approach is that for technical reasons it will not work for intermittent sources of emissions as body shops invariably are. It becomes virtually a nightmare to effectively manipulate and manage the variables involved for intermittent sources.

It is critical that the document more clearly shows that the composite calculations for multi-stage topcoat (basecoat-clearcoat and basecoat-midcoat-clearcoat) are critical to allow setting of VOC limits for both Option 1 and Option 2. Since any such limits are technology forcing, this treatment of topcoat VOC will give coating suppliers a good chance to achieving such reductions. Failure to do so reduces such chances drastically. EPA has documentation in hand from the Bay Area and CARB when those regulations and guidance were developed that show this to be a critical component when setting VOC limits for topcoats. Actual source data also supports this treatment when applied in practice.

<u>Specific Items Needing Attention</u>

Sec. 2.1 (Pg. 2-1)	Document states that industry does not deal with heavy trucks but is covered in another CTG document. This is not true as that CTG deals with OEM situations not refinishing (repairing). Thus, mobile equipment such as farm machinery, construction equipment and heavy duty trucks are not covered by the OEM CTG or this refinishing CTG.
Sec. 2.3.2 (Pg. 2-8)	It is true that hardeners promote curing but are also used to increase gloss and/or durability.
Sec. 2.3.4	It is true that waterborne primers have been introduced in the SCAQMD and Texas Dallas/Ft. Worth area to meet the regulatory requirements there. No waterborne basecoats are yet anywhere in commerce as this section implies. (A non-coalition member advertises that such a product exists in SCAQMD. It is not found in any shops known to Du Pont.) It is one thing to claim, but another whether reasonably available.

Sec. 2.2.5 (Pg. 2-4)	"Gun blending" as described does work when using high VOC coatings and conventional spray. It becomes far more difficult to use this procedure effectively when dealing with low VOC coatings especially when coupled with higher T.E. spray equipment. Even after extensive operator training this still remains a complicated task and leads to likely redo's. See also Sec. 2.5.2 last two paragraphs to reflect the above reality.
Sec. 2.5 (Pg. 2-11)	Airless spray guns should be air atomizing spray guns.
Sec. 2.5.1 (Pg. 2-12)	Airless should be changed to air atomizing.
Sec. 2.6 (Pg. 2-17)	The guidance shows that some companies provide solvent recycling only to shops that rent their gun cleaning systems. In our view, this is anti-competitive and strictly based on profit motive, and not very environmentally friendly. It should not be sanctioned in a guidance document.
Sec. 2.7 (Pg. 2-20)	Document implies that coatings manufacturers do not have the resources or time to devote testing product compatibility with competitors' coating. That might be true, but the document should also show that such cross competitors combination testing becomes astronomical in scope, and if even possible, could confuse the user and produce many failures that would have to be re-done.
Sec. 2.7 (Pg. 2-19)	Study implies OEM color usage could be restricted, or return to single stage coatings, would reduce VOC emissions. That is not quite true. Use of few colors will reduce complexity but use of single stage coatings over multi-stage will not reduce coatings usage as they are applied, at about equal film thicknesses. Even if it were true, then at what costs? Study should also point out that this approach would leave no domestic automobile industry in place!
Sec. 3.3.1 (Pg. 3-8)	The assumption that twice as much clearcoat would not be needed might be true theoretically if solids content is the only criteria. In practice, however, this does not hold, based on cost as well as how the two components get used. Clearcoat in all spot repair and panel repair always gets used

over a larger area. This is 90% of all repairs being done. Basecoat, being the more expensive, always gets used as a minimum to get the job done. Actual industry studies have validated this ratio consumption. In fact, the ratio understates what it is in practice.

Sec. 3.3.1 (Pg. 3-5) Document states that Option 2 coatings are currently available, can achieve color match, but are not as widely used. As already stated elsewhere, Option 2 coatings are not readily available, hence no color match predictions can be made. All VOC levels in Option 2 are technology forcing.

Sec. 3.3.2 (Pg. 3-9) We agree that transfer efficiency is difficult to verify. However, the benefits of using such approach to control VOC emissions must not be ignored. It can be documented that shops changing from conventional spray to HVLP, for example, cut their coatings purchases roughly in half. This method of control reduces VOC emissions far more drastically than product VOC reductions alone. In combination the VOC reductions that can be achieved can be over 80%. EPA must find a way to deal with this issue. Past experience by EPA is for large source control, where testing procedures could be required to verify T.E.. Body shops are quite different sources, small and unsophisticated. A method should be found, if no more than mass balance accounting, to arrive at some T.E. credit for VOC controls. In fact, the economic gain by shops could off-set some of the other costs accrued through regulations.

Sec. 3.3.3 This technology, use of supercritical gases as the solvent component in spray application is in the quite distant future and not as implied. It is one thing to paint a recurring, monotonous article than to re-paint the ever changing repair of differently configured vehicles, especially for the many small color changes required.

Sec. 3.5.1 As stated in the general section, add-on control devices should be acknowledged that they are not feasible for intermittent sources.

Sec. 3.5.3.	Biofiltration might be an effective means for add-on control for emission streams that are constant and predictable. In a body shop configuration the VOC emitted is intermittent and also varies from product to product used. It is questionable whether a given bacteria colony will digest the various VOC's uniformly. This technology needs to be demonstrated for the body shop setting first before the guidance document should imply that it is or might be viable.
Sec. 3.7 (Pg. 3-17)	Document states that waterborne basecoats are available. This is disputed as presented in the general comments.
Sec. 4.2.1 (Pg. 4-5)	The film thickness required for each coating shown have to be questioned. For pretreatment wash primer (precoat) 0.1 to 0.5 mil thickness is more likely than the 1.0 mil shown. For primer surfacer a 1.5 to 2.0 mil is more representative than the 2.25 mils shown. For primer sealer a 0.75 to 1.25 mil film is more representative than the 1.75 mils shown. For topcoats a 2.0 to 2.5 mil thickness is more representative than the 3.5 mils shown. In the case of topcoats the thickness represented can occur when highly transparent colors are used and extra film thickness is needed to get hiding. EPA's information source should be checked to determine if information is average film build or maximum.
Sec 4.2.1 (Pg. 4-7)	Assigns 35% T.E. to conventional spray. It is more like 25-30% T.E. in practice.
Sec. 5 (Table 5.5)	Table does not account for regeneration and disposal costs in the carbon adsorption column. They could be significant even if such a service were available.
Sec. 5.5.2 (Pg. 5-13)	In use of waterborne coatings, there is the potential to contaminate water discharges that the document does not point out.
Sec. 5.5.3 (Pg. 5-14)	The disposal costs are not acknowledged for waterborne coatings which can be significant. Costs can be 6 times as high as solventborne wastes.
Sec. 5.6 (Pg. 5-17)	It is interesting to note that the costs for the industry are not presented, only by model stages. A quick calculation shows that for

	Option 2 the industry costs are close to $600 million as an average. And this does not account for some of the productivity cost changes and insurance premium costs changes that need to be added as these comments have pointed out.
Sec. 6.2 (Pg. 6-3)	Gun cleaners to be vapor tight needs to be fuller defined. It should specify that it can't exceed x grams/hours of active losses and y grams/hour of passive losses or at least state "reasonably" vapor tight.
Sec. 6.2 (Pg. 6-4)	Topcoat definition needs to define these multi-stage coatings to be controlled by a composite number arrived on the basis shown in Sec. 3.3.1 (Pg. 3-7).
Sec. 6.4.1 (Pg. 6-6)	As pointed out earlier, Option 2 coatings are not readily available.
Sec. 6.4.2 (Pg. 6-7)	We disagree with the finding that body shops could be required to use shared painting facilities. This is blatant social engineering and goes against free trade practices and anti-trust principles. It is one thing to let the free market produce such alignments, and quite another when it is commanded. Also, the desire that is laid out for biofiltration in this section must be tempered with the comments made for Sec. 3.5.3.
Sec. 6.5.3	It is important to state that the equations presented in Sec. 3.3 must be applied, not if, in order for industry to have a chance to achieve the VOC requirements recommended.
Sec. 6.6.2	Vapor tight needs to be defined as commented earlier. (See Sec. 6.2 comment.)
App. D	Appendix, as currently drafted, is incomplete. This should be redrafted to include all the findings of the document and the corrective comments provided. This is critical as this is the output of a CTG that will be used by agencies to place into regulations.
App. D,a	Topcoat definition should contain the equations as laid out in Sec. 3.3.1.
App. D,d,1(iii)	Vapor tight must be defined as explained above.

App. D,c,3,(i) Topcoat VOC limits must include per definition given composite formula as in Sec. 3.3.1.

Table 3-1 (Pg. 3-6) This table apparently represents in concise form the findings of the draft document. There are a number of difficulties here and might mislead state agencies in a number of ways. First, the baseline VOC ranges given represents controlled areas' VOC emissions (California) not the uncontrolled emissions in the rest of the nation. Our industry survey data to EPA clearly show the difference. This will lead to agencies calculating wrong baseline emissions for their jurisdiction. Secondly, the VOC limits for Option 1 and Option 2 seem to be set quite arbitrarily and are not properly documented. It seems the kind of assumptions that were made are, as an example: Since urethane coatings generally are lower in VOC content than others, the limits can be set at that level. What it doesn't account for is that urethane coatings work well for overall repairs, but do not work well at all for spot repair work (the majority of repairs). Urethane coatings also do not give good metallic appearance and are difficult to use in spot repair that will duplicate the original finish. As argued in the general comment section, this table for Option 1 and Option 2 VOC levels should follow the SCM determinations for RACT and BART VOC limits.

We are pleased to have offered this analysis for the draft CTG for refinish. I am available to expand on these items if EPA so desires. I look forward to working with EPA to develop a workable and reasonable CTG for the refinish industry.

Very truly yours,

K. R. Schultz

Karl R. Schultz
Environmental Consultant

KRS/kle

National Paint & Coatings Association

December 2, 1991

Mr. Bruce Jordan
Director, Emission Standards Division (MD-13)
Office of Air Quality Planning and Standards
U.S. Environmental Protection Agency
Research Triangle Park, NC 27711

Dear Mr. Jordan:

I am supplying some additional information along with a copy of the presentation that we submitted at the November 21 NAPCTAC meeting.

Most of it is self-explanatory. The CARB document was referred to by us fairly extensively in the our presentation. The article from an automotive refinish professional magazine supports our arguments concerning the deep rooted extent of the product systems nature of the industry today. Also, the material from Du Pont compliments similar instructional material that was referred to by Ron Hilovsky of PPG.

Also you should be receiving separate comments from many of the members of the Coalition.

It was good to meet you at the meeting. I have to tell you, in all honesty I do not believe that I would have been able to hold up as well as you folks did in those marathon sessions.

If you need additional information, please contact me.

Sincerely,

Jim Sell
Senior Counsel, State Affairs
Secretary to the NPCA Automotive Refinish Coalition

1074

1500 Rhode Island Avenue, NW • Washington, DC 20005-5597 • 202/462-6272 • FAX 202/462-8549

National Paint & Coatings Association

POSITION PAPER

OF THE NPCA AUTOMOTIVE REFINISH COALITION

CONCERNING

DRAFT AUTOMOBILE REFINISHING CONTROL TECHNIQUE GUIDELINE

****

Introduction

The NPCA Automotive Refinish Coalition: The Automotive Refinish Coalition was formed in 1988 under the auspices of the NPCA to work for effective and nationally consistent VOC regulations for the automotive refinish industry.

The active participants in the Coalition are the six national manufacturers of automotive refinish paints and coatings: AKZO Coatings, Inc.; BASF Corporation; E.I. du Pont de Nemours; Nason Automotive Coatings; PPG Industries, Inc.; and the Sherwin Williams Company. Collectively, these companies account for the lion's share of the total volume of automotive refinish products that are sold in the United States. These companies also provide the majority of the training that is taken by individuals to become proficient in the use of automotive refinish products. The six individuals who represent these companies on the Automotive Refinish Coalition collectively possess over 150 years of experience in the industry. They therefore are in a particularly good position to comment on the industry's products and the underlying economics and operational requirements of automotive refinish facilities.

The Coalition also has as adjunct members a number of trade associations that represent user segments of the industry. While the adjunct members generally support the positions taken by the six manufacturer members of the Coalition, they have not had an opportunity to review this position paper. Consequently, the positions taken should be seen as representing only those of the six manufacturers.

Objective of the Coalition: The objective of the Coalition is the development of nationally consistent VOC regulations that achieve significant, real and effective reductions in VOC emissions from automotive refinish facilities while not imposing unnecessary additional costs or losses in productivity on the automotive refinish facilities.

Moving to lower VOC containing products will create enormous productivity problems for automotive refinish facilities. Our

1500 Rhode Island Avenue, NW • Washington, DC 20005-5597 • 202/462-6272 • FAX 202/462-8549

concerns on this score are particularly strong because the industry has a large population of small businesses. Approximately 40% of the shops employ less than five individuals and have sales volume of under $150,000 annually, according to a 1988 EPA study of the industry.

Effective VOC Regulations Must Recognize and Incorporate Industry's Practices and Operational Realities

To achieve the objectives of significant reductions in VOC emissions from automotive refinish facilities at the least amount of unnecessary economic disruption to the industry, a regulatory program must incorporate fundamental technical, operational, and economic features of the industry.

Achieving Adequate Matching of Repair to OEM Finish: Achieving an adequate repair that matches the existing coat so that the repaired area is imperceptible is the central requirement of the industry. Thousands of colors and coatings must be available for all model years of the various car manufacturers to match the many different features of thousands of original coatings, such as their color, gloss, and durability, as well as the effects that time and the elements have had on the OEM color and finish. All of this must be accomplished at facilities with far less sophisticated equipment, under much more difficult and uncontrolled circumstances than exist at the original equipment manufacturers' facilities.

Systems Nature of Today's Products: Today's products are provided by individual manufacturers in the form of chemically complex interrelated components to a single system. The components of a particular repair system must be used only within the system of the particular manufacturer and pursuant to the manufacturer's instructions to ensure that the refinish job will not fail.

Composite Calculation for Multiple Coat Topcoats is Essential: The use of multiple coats involving a base coat for color and clear coats for appearance and protection as well as in some cases a midcoat is the predominate original equipment manufacturer (OEM) topcoat system. The appearance of these OEM topcoats must be matched by the automotive refinish industry and consequently, the industry must use multiple coats in a topcoat system.

Comments Concerning Regulatory Approaches

The RACT VOC Limits of the California Guideline for the Industry Should be Selected as the RACT Limits for the CTG

The purpose of the CTG is to establish technology that is the presumptive norm for "reasonably available control technology" (RACT) which must be implemented by states in their ozone nonattainment areas. EPA has defined (and Congress has accepted) RACT to mean: "The lowest emission limitation that a particular source is capable of meeting by the application of control technology that is reasonably available considering technological and economic feasibility. RACT for a particular source is determined on a case-by-case basis, considering the technological and economic circumstances of the individual source. (44 Federal Register 53761, 53762 (September 17, 1979))

On the basis of this standard -- a standard that emphasizes the economic and technological feasibility of control technologies in light of technological and economic circumstances of the sources -- the VOC limits that have been established by California's Air Resources Board's Automotive Refinish Guideline for RACT under California's Clean Air Act (which has a much tougher standard and program for ozone attainment than the federal law) should be RACT for the national program. (See attached chart for the California Guideline RACT limits.)

While the terms "reasonably available" and "feasibility" are not defined by the EPA, an ordinary dictionary definition of "feasible" is something that is "capable of being used or dealt with successfully;" "available" has been defined in a manner especially relevant to this discussion as "present in such chemical or physical form as to be usable;" and "reasonably" has among its ordinary meanings "moderate, fair, and inexpensive." When the meanings of these terms are coupled with the requirements of "economic and technological feasibility" and the additional requirement that the feasibility of the control technology be ascertained on the basis of the "economic and technological circumstances of particular sources," then whatever else RACT means, it certainly cannot mean the imposition of technology-forcing standards on existing sources.

The California RACT limits have much to recommend them for adoption in the CTG.

First, by actual implementation in automotive refinish facilities, they have been proven to be currently "reasonably available" and "technologically and economically" feasible. Second, they have been established by the toughest clean air program in the country. In this connection, we note that the

California Clean Air Act has a much more stringent ozone design value of .09 ppm as compared to the federal standard of .12 ppm.

The attached chart represents a comparison of VOC reductions that could be achieved by implementing the California Guideline's RACT limits.

According to the Study's Own Findings, Option 1 and Option 2 Limits Are Technology-Forcing Standards; They, Therefore, Are Completely Inappropriate for the CTG

By the study's own statements, Options 1 and 2 represent "technology-forcing" VOC limits, requirements that are not currently "reasonably available" as that term is defined by the EPA. Therefore, these options do not qualify as RACT. Moreover, if the base coat/clear coat composite calculation method is not employed, then the limits specified for topcoats under both Option 1 and Option 2 are not only "technologically and economically infeasible" for the "particular sources" of automotive refinish facilities, they are absolutely impossible to achieve with today's technology.

The study indicates that lacquer product systems are still widely used by many of the smaller shops that do not have spray booths. (See pages 2-7, 2-20 through 2-25 of the study.) The study also assumes that such shops constitute approximately 30% of the industry. (See Table 2-1 at page 2-22.) Moving these shops away from lacquer products to other more difficult to use and slower drying products will be difficult and very costly. The unmistakable implication of the topcoat limits of Options 1 and 2 is that a large number of the industry's smaller shops will be put out of business. The study estimates that the cost of a spray booth would be approximately $30,000. We believe that this estimate is low. And most of these shops are currently grossing at most $150,000 per year. Few if any banks, especially in today's economic climate, would lend the amounts needed for such a capital outlay to the smaller shops. Consequently, topcoat limits of Options 1 and 2 which would prevent the use of any lacquer system do not represent a "currently" "reasonably available control technology" as judged on the basis of "technological and economic feasibility" of these "particular sources."

The study also states that, "Option 1 VOC limit had the reported disadvantage of poorly matching OEM colors (especially metallics), indicating that they are best suited for complete vehicle refinishing jobs." (See page 3-4.) In view of the fact that the study also finds that the "... the OEMs use metallic and 'pearl' coatings on at least 50 percent of all new vehicles....", it should be clear that the Option 1 VOC limits do not constitute "reasonably available control technology" for this industry. Establishing the Option 1 or 2 limits, according to the study's

own findings and conclusions, would in effect mandate that a larger proportion of the repairs be accomplished by complete refinish jobs. This would necessarily result in the emissions of more, not less, VOCs and would fail to achieve the fundamental objective of RACT -- achieving reasonable further progress towards attainment. Additionally, there is the question of whether establishing VOC limits that "poorly match OEM colors" for 50% of the vehicles the industry repairs constitutes a "technologically and economically feasible" control technology for an industry that has as its sole reason for being the ability to make repairs so that the repair is imperceptible.
The study also contains a number of misleading assumptions concerning the VOC emissions that should be associated with the industry's products and operations. The first of these involves assuming that the VOC content of products that are supplied to areas which currently have regulations constitute the baseline "current technology" of the industry's products that are generally used in the United States. (See Table 3-1 at page 3-6.) In fact, the majority of the products supplied by the manufacturers are to areas for which no VOC limits for their products exist, including the vast majority of current ozone nonattainment areas. Defining baseline technology as the study does would lead to a gross understatement of the contributions in VOC reductions that properly should be attributed to this industry introducing lower VOC containing products to areas that heretofore have not required lower VOC containing products. The Act's new requirement for reducing by 15% overall VOC emissions in the top four categories of ozone nonattainment areas by 1996 will place extraordinary pressures upon all sources to reduce their fair share of VOC emissions. Thus it is essential that the CTG accurately characterize the existing VOC emissions from this industry in these areas to ensure that it is not tasked with regulations that exact an unreasonable contribution in VOC emissions reductions.

Additional misleading statements and assumptions in the study concern the following subjects: the statement concerning current usage of coatings that implies that all coatings material supplied to refinishers are in fact applied, when approximately 20% -- 25% in practice is wastage and is disposed of by incineration in which there is no release of VOCs; overstatements of the required or recommended film thicknesses; and overstatements of the paint consumption in each of the coatings categories. These are more fully discussed in the submission from BASF.

We anticipate the argument that since the California Guideline 1992 limits are just around the corner and that since some of these limits are more stringent than comparable limits in Option 1, the manufacturers should be able to meet the limits of Option 1 nationwide if they can meet the California 1992 VOC limits in California. In answer to such an argument, we point out that the

products that are needed to meet some of these limits, especially the topcoat limit, are still not yet at a stage of development that would allow the manufacturers to introduce them into facilities without substantial expenditures in time and resources. These products will require the use of spray booths, which the study itself notes are not widely used by the smaller shops which makes up about 30% of the industry. Moreover they will require the use of drying equipment, because the products will be mostly waterborne products with substantially longer drying times. In order to maintain today's levels of productivity in terms of the number of vehicles that are completed substantial expenditures for drying equipment will be required.

Finally there is a question of scale involved here. It should be noted that the California 1992 limits will be confined only to certain air quality districts in California. While the manufacturers may have sufficient resources to weather the problems and expenditures that will be associated with introducing these products into a limited number of areas in California, imposing similar requirements nationwide results in an effect on the manufacturers that certainly qualifies as "economically infeasible."

We realize that the EPA is interested in crafting a CTG that accurately reflects what can be accomplished by the industry at the time the CTG is published and that it is confronted with the difficulty of a moving target in the technologies. The six manufacturers have expended literally tens of millions of dollars thus far in efforts to develop lower VOC products and the EPA is right to anticipate that these efforts will continue. But this problem of RACT being overtaken by new developments is addressed in the newly amended federal Clean Air Act which now requires that the EPA periodically revisit CTGs to determine if technology has moved ahead of existing CTG standards. We suggest that this is the only appropriate process recognized by the Act for introducing technology-forcing factors into developing CTGs. Requiring technology-forcing limits in the CTG itself is completely at variance with the essential "reasonably available" nature of a RACT standard.

We have another suggestion by which this current effort to determine an automotive refinish CTG could avail itself of new technologies that might be available at the time this CTG is finalized. If this CTG development process takes until 1993 to be finalized, it is possible that the experience gained in meeting the California Guideline's 1992 limits in California will demonstrate by then that the Option 1 limits and perhaps some of the California 1992 limits are in fact "reasonably available" in terms of their "economic and technological feasibility" for national implementation. We note, however, that, with respect to the California 1992 limits, the industry at the present time

does not have a sealer that would meet the limit specified for this coating. Because of this and other potential problems of introducing such advanced systems nationwide, at the present we believe that a lead time for implementing such limits would be needed, e.g., implementation in 1994 or 1995.

The Necessity of Base Coat/Clear Coat Averaging For Determining the Topcoat Limits

The multiple coat system of topcoats is the current predominate topcoat technology of the automotive manufacturing industry and the refinish industry must be able to match these topcoats. Using a composite calculation for the VOC content of the base coat and clear coat in a topcoat system to determine compliance with the topcoat VOC limit is dictated by the actual day-to-day "technological and economic circumstances" and practices of the industry.

A statement of the study which may account for the failure of the CTG Model Rule to include a base coat/clear coat composite calculation method is an apparent misunderstanding of the basis for weighting base coats and clear coats at a ratio of 1 for base coats to 2 for clear coats. The ratio is based upon the actual usage of the industry. It is the industry experience that the volume of base coat paint that is used for any given repair is approximately on half the volume of clear coat that is used. In this connection we refer you to the information that has been provided by the BASF Corporation which is based upon the actual usages at an automotive refinish type of operation at the Saturn General Motors plant and by the Sherwin Williams Company. In fact that experience indicates that the ratio is higher, e.g., for 1 gallon of base coat, 2.3 gallons of clear coat are used. The study assumes that because clear coats are a higher solids product than are base coats, then the volume of clear coat material that is needed to repair the are covered by the base coat should be twice the volume of base coat material. The major reason that the industry generally uses twice the amount of clear coat material as it does base coat material is the need to achieve adequate color and finish match for spot repairs that requires that the clear coat in general be extended far beyond the area covered by the base coat. About 90% of the automotive refinish work that is done is spot repair.

The Systems Nature of the Industry's Products

Because the chemistry of the individual components of a repair system is highly interdependent, the components of a particular manufacturer's system must be used according to its instructions and cannot be interchanged with the products of another manufacturer. The systems nature of today's repair products has two very important implications for a regulatory system that limits the VOC content of the products. First, regulators can

have a great deal of confidence that refinishers will not attempt to match relatively higher VOC components of one manufacturer's repair systems with those from another and that therefore the VOC levels associated with a particular system will be complied with. Secondly, the regulations cannot simply select the lowest VOC components of the available repair systems and dictate that these components be incorporated into every repair system.
and in the right amounts. As a recent article from an automotive refinishers professional magazine points out:

> [T]here is no margin for error in applying or mixing today's products. The paint company chemist was able to create a product to suit, but only if you do exactly as he says. Not only must the painter combine the correct solvent, catalyst and topcoat in the correct percentages, but it must be applied over the correctly mixed undercoats at the correct time... There is only one right way to use today's finishes; exactly according to directions and using only one brand.

Auto refinishers will not act as their own chemists; they will follow the manufacturers' instructions or risk a failed job without the protection of a warranty.

Another feature of the industry that supports the conclusion that automotive refinishers will comply with the VOC limits specified for products is the VOC compliance instruction material and the training that is supplied by the manufacturers to users of their products.

<u>The Need for Specialty Coatings</u>

It also is essential to recognize the need for relatively higher VOC containing specialty coatings. These products constitute a very small percentage of the products used by the industry but they are essential to effectively accomplishing certain repairs. An important example of these are "uniform finish blender" specialty coatings to make spot repairs. This specialty coating blends the repaired area in with the surrounding original finish to match all facets of its appearance, including color, metallic orientation, texture, and appearance. Greater VOC emissions would occur if refinishers do not have the ability to perform spot repairs because they would be required to paint an entire panel of the vehicle or the entire vehicle itself in order to achieve acceptable results.

We recognize that the model CTG includes the category of "specialty coatings." But its characterizing them as being "reportedly" needed for unusual job performance requirements, however, concerns us because that implies that the need of these products is debatable. The special role of specialty coatings should be emphasized by the CTG. It should not be implicitly

questioned by the CTG which might invite states to modify the CTG by removing the category.

We also recommend that the California Guideline's definition of specialty coatings should be adopted. The definition does not limit the type of coatings that can fall into this category but restricts the coatings to 5% the total volume of coatings applied by an automotive refinish facility. This approach allows for the development of additional specialty coatings and the 5% restrictions ensures that the category will not be abused.

The General Use of HVLP Spray Guns Results in Significant Reductions of VOC Emissions and Should be Encouraged

The efficiency of transferring coatings to the vehicles has been greatly improved by the use of high volume, low pressure (HVLP) spray guns. The resulting VOC reductions that accompany the reduced amount of coatings material that is required because of the improved transfer efficiency should be explicitly recognized by the regulations. To do otherwise deprives this industry of having credited to it significant VOC reductions that in fact result from the use of HVLP spray guns. The unwillingness of the EPA to explicitly recognize and to credit VOC reductions associated with the use of the equipment is a hidebound adherence to notions concerning "quantification" and "replicability" of VOC emission reductions. These principles were established for a regulatory regime that focused on well-heeled and richly staffed large stationary sources which lent themselves to such precise demands for crediting VOC reductions. The 1990 amendments to the law, however, require the regulation of much smaller sources and therefore the EPA's VOC emissions reduction accreditation principles must be retailored to measure the effectiveness of regulatory controls that are appropriate for the much smaller sources.

As the study notes, appropriate training has a great deal to do with the efficacy of HVLP use. In this connection, it should be recognized that extensive training is provided in this area by the manufacturers of automotive refinish coatings and others. Further, aside from the regulatory requirement to use such equipment, autorefinish facilities have a very strong economic incentive to use the equipment to reduce their consumption of coatings.

It also should be noted here that the study seems to assume a 35% transfer efficiency for the conventional spray gun but is unwilling to assume any transfer efficiency for the HVLP. This is anomalous in that any problems that are associated with achieving effective transfer efficiency with the HVLP spray gun, such as variability in operator use and the shape of the object being coated, also apply to conventional spray guns.

The experience of the Coalition is that the use of HVLP spray guns results in reductions of 20% -- 45% in materials usage and some credit for the resultant VOC reductions should be given.

Add-On Controls

The various engineering add-on control technologies identified by the study for facilities would be cost prohibitive and or technologically infeasible for the great majority of automotive refinish facilities to adopt at this time. Nonetheless, the regulations should recognize such controls as voluntary alternative control techniques that could be used in lieu of lower VOC containing products. The technology of add-on controls could improve in the near future, perhaps rapidly, and they could come to represent cost-effective alternative compliance methods.

Conclusion

The objective of the CTG is to establish a guideline for what is the presumptive norm for "reasonably available control technology" (RACT) under the federal Clean Air Act. In developing such a guideline, the "reasonableness" of the technology is to be considered as well as both its "technological" and "economic" feasibility. On the basis of these criteria and our knowledge of the industry -- the available coatings technology and the operational and economic requirements of automotive refinish facilities -- we believe that the VOC limits specified for RACT in the California Guideline should be the limits established by the CTG. The adoption of these limits from a program that is much tougher than the federal program will ensure that the industry contributes more than its fair share of VOC emissions reductions in the nation's ozone nonattainment areas. We also believe that specialty coatings must be explicitly recognized as an essential technology for the industry to achieve VOC emissions reductions. Further, it is absolutely critical that the multiple coat composite calculation technique for determining compliance with VOC topcoat limits be recognized. This is the way the industry applies the topcoats and it is the only way that VOC limits for increasingly waterborne topcoats can be met. The contributions made by HVLP spray guns should also be recognized by the CTG. Finally add-on controls should be recognized as a voluntary alternative compliance method.

The possibility that the Option 1 or even some of the California Guideline's 1992 VOC limits may be demonstrated to be "reasonably available" by the time the CTG is finalized in 1993 is also worth considering. The six manufacturers would concur in such an approach provided that before the limits are adopted as part of the CTG, the technology has in fact been shown to be reasonably available and that an appropriate lead time is afforded (e.g., until 1994 or 1995) to ensure that the products in fact are "reasonably available."

ON OF VOC EMISSIONS REDUCTIONS

CARB's GUIDELINE

% of Total Coatings 2	CTG	CARB	Coating Category	Baseline VOC	CARB'S RACT		CARB'S 1992 Limits**	
31%	2%	1%	Pretreatment Wash Primers	6.7	6.5	0.1%	6.5	0.1%
-		1%	Precoats	6.7	6.5	0.1%	6.5	0.1%
6%	12%	12%	Primer/Primer Surfaces	6.7	6.0	2.3%	2.8	12.6%
9%	5%	5%	Primer Sealers	6.7	6.0	2.3%	3.5	4.3%
5%	58%	17%	Topcoats***	6.7	6.0	3.2%	5.0	22.8%
-		41%	Metallic/ Iridescent***	6.8	6.0	8.7%	5.0	19.5%
9%	8%	8%	Surface Cleaning	6.7	1.7	6.0%	1.7	6.0%
8%	10%	10%	Enclosed Equipment Cleaning	6.7	88%	0.8%	98%	0.8%
0%	5%	5%	Specialty Coatings	7.0	7.0	2.8%	7.0	2.8%
0%			Transfer Efficiency	25%	45%[1]	0.0%	45%[1]	0.0%
			CARB GUIDELINE					
0%			Reductions Achieved	-0-		26.3%		69.0%

y data. Should be based on uncontrolled emissions survey data.

n 1994 - 1995 once technology has been demonstrated in California in 1992 -

alculations.
ies in column expect for enclosed equipment cleaning and surface cleaning.

December 2, 1991

National Paint & Coatings Association

NPCA Automotive Refinish Coalition's

Additional Comments Concerning

Technical and Factual Issues Raised by the Study

The study is an attempt to review and analyze the current technologies, economics, and operations of the automotive refinish industry to determine the reasonableness and technical and economic feasibility of VOC emission reduction technologies.

The study, in our view, represents an honest effort to portray the industry accurately and demonstrates a sound grasp of the basic features of the automotive refinish process. Nonetheless, it contains a number of implications, statements, and conclusion that are inaccurate or misleading. Since the study will be the basis for standards that will be adopted for this industry through a CTG, it is important that it accurately reflect the real world of this industry.

The following are a number of points of disagreements or areas in which we believe a fuller picture is required than what is set out by the study.

General Overview of the Industry

We have reservations concerning the characteristics that the study assigns to various shops as model shops. This is not to say that we disagree with all of the study's characterizations or that we so not appreciate the difficulties associated with efforts to get a handle on an industry as diverse as the automotive refinish industry. Nonetheless, we urge caution in extrapolating from these model shops to real world shops. Some shops -- perhaps many -- will not fit neatly into anyone of the models. This is particularly true with respect to the types of coatings that may be employed by various shops.

The study also seems to fail to grasp the fact that coatings reformulations are not easily accomplished. Besides the very difficult task of having to reformulate literally thousands of colors to match the diverse automotive population, these new coatings must be transferred effectively into the production of the shops. When the coatings become increasingly waterborne, they become much more difficult to reformulate and they become even more difficult to train the end user in how to use them effectively. Lower solvent products are more difficult to use and are less forgiving of mistakes. The transition to waterborne products is an extremely difficult task and should be recognized as such.

1500 Rhode Island Avenue, NW • Washington, DC 20005-5597 • 202/462-6272 • FAX 202/462-8549

Coatings Issues

There are several statements in the study which misapprehend the technologies of current or future coatings or the usage of such coatings by the industry.

The most important misunderstanding concerns the base coat/clear coat technology for topcoats. Actual industry usage of these coatings demonstrates that the coatings are in fact used at a ratio of more than 2 clear coat materials for 1 base coat. The primary reason for this is that in applying the clear coat in spot repairs, the material must be extended beyond the repaired area to match the original finish.

The systems nature of the industry's coatings also is not fully understood by the study. The systems nature of today's coatings is a fundamental fact of the industry and it applies to the entire range of coatings, including undercoats and not just topcoats. The failure of the study to fully understand this leads to a number of misleading assumptions. An example of this is the implication at page 2-8 that non-isocyanate hardeners are generally available to replace isocyanate hardeners. In fact this is not true if the product system involved is based on isocyanate products. Also, the study's definition of coating "system" at page 6-2 limits the systems to primer-topcoats.

The components of automotive refinish product systems are designed to work together only within a particular manufacturer's system. At page 2-20, the study implies that the components could be made interchangeable if the manufacturers spent sufficient time and money on the effort. As an abstract statement, this comment is true. But it fails to recognize the tremendous costs of such an undertaking to the manufacturers and to the shops and the public in the form of failed jobs. Additionally, the product differentiation that accompanies the systems approach is a valuable incentive for the manufacturers to continually improve their products secure in the knowledge that technological breakthroughs that for example lower the VOC content of products will not be easily replicated by their competitors.

The industry is moving to waterborne products. That is a fact of life and the manufacturers have spent tens of millions of dollars to develop these type of coatings. Nonetheless, these coatings are not yet generally available as is implied by the study at page 3-17. Also the statement that waterborne higher solids primer sealers are simply "lagging" is also misleading -- they are much further away from being practical coatings than "lagging" implies. Perhaps some of the confusion on this point arises from the study's understanding of what constitutes a waterborne coating. On this score the study at page 2-8 implies that waterborne systems have only 5% water as their volatile

fraction. In fact, the industry considers a product waterborne when it has 85% of its volatile fraction as water. Also the study fails to adequately address the additional waste water disposal costs that will attend the wider use of such products.

On a related subject, at a couple of points the study indicates that the key ratio for determining the VOC content of a product is its solvent/solids ratio. (See page 3-4.) We agree with this concept but believe that the "less water" calculation technique required by the EPA for determining the VOC content of products is at variance with this fundamentally sound notion and should be changed accordingly.

Also with respect to waterborne coatings the study fails to take adequate account of the additional hazardous wastes that will be generated by the wider use of such coatings and the attendant disposal costs. (See pages 5-13 and 5-14.) Nor does it adequately weigh the losses in shop productivity that will accompany the wider use of the products. (See page 5-17.) Drying times will increase greatly and shops without drying booths will be reduced to completing one half to one third of the vehicles that they now can complete with solvent borne products. The ability to refinish vehicles at a reasonable cost will disappear and the insurance premiums consumers have to pay for collision insurance will increase dramatically.

The study also grossly overstates the current volume of products that are used by the industry. (See the comments from BASF.) At pages 2-3 and 2-4 the study wrongly suggests that a pretreatment coating is exclusively used with solvent borne systems and a precoat is exclusively used with waterborne systems. Further, the discussion of adhesion promoters at page 6-2 should be clarified to make clear that the material is also applied at the edge of the unsanded area. In a related point, the study fails to recognize adequately that specialty coatings constitute a very small percentage, less than 5%, of a shop's total coatings usage and that these products are critical to the shop's ability to effect certain repairs. While it is true that these coatings are higher VOC products, they constitute such a small percentage of usage that it makes no sense to focus on lowering their VOC content when the R&D efforts could be better put to reducing VOC levels in the larger volume products.

Technology Issues

The study contains number of factual statements concerning technology issues involving spray booths and HVLP and conventional spray guns that are misleading.

As to the spray booths, the study at page 2-9 implies that all coatings are applied in a spray booth. In fact a number of

coatings, particularly undercoats, are generally not applied in a spray booth. The implication of this is that waterborne products that are used for undercoats generally would not be accommodated in a spray booth that could reduce drying times. Hence, the widespread introduction of the waterborne products would as things now stand greatly reduce productivity at many facilities. In this regard the study greatly understates the costs of introducing the technology, by focusing exclusively on the costs of the products and capital equipment. In fact, significant productivity losses will accompany the use of waterborne products and these costs must be taken into account in evaluating any regulation that would impose them.

As to spray guns, we address the need to recognize the efficacy of HVLP guns in the body of our comments. As we state there, HVLP spray guns do reduce VOC emissions and should be properly credited for doing so in the CTG. The study acknowledges at various points that transfer efficiency in the use of the HVLP guns can be greatly enhanced through appropriate training and at page 3-16 stresses the important role played by the manufacturers of automotive refinish coatings in providing this training. It is ironic that much costlier and in our view questionable add-on controls are considered as potentially effective by the study and yet the efficacy of a reasonably priced piece of equipment like HVLP spray guns receives such short shrift. The study should recognize the importance of this relationship and see the manufacturers as more of a partner in assuring lower VOC emissions from automotive refinish facilities. In the same connection, however, the study fails to recognize certain inherent difficulties that are associated with the use of any spray gun by implying at page 2-4 that blending the edge of the refinish area with the original topcoat could be achieved as readily through use of the spray gun as it is achieved through the current practice of employing more dilute blend coats.

The discussion at page 2-15 of the problems of introducing electrostatic spray guns into automotive refinish shops merit a fuller treatment, especially the great risks of fire and of electrocution that arise if this equipment is not used in accordance with very strict operating procedures that will be difficult for many shops to observe.

Add-On Controls

Add-on controls are dealt with fairly evenly by the study at least in the conclusion that such controls are not presently generally feasible for the majority of automotive refinish facilities. Whether the study's cost estimates for these controls are accurate (and we believe that they understate the costs greatly), in the end the study reaches the appropriate conclusion that such controls should not be imposed on automotive refinish facilities as RACT. We might add that in our opinion,

imposing such controls on the facilities would drive 75% of the existing shops out of business. And some of the technological assumptions concerning such controls are very misplaced. For example, it is inconceivable that with today's technology that a biofiltration system would work at any automotive refinish facility. The VOC emissions are simply too varied for any body of microbes to handle effectively. Also, incineration is simply not an effective control technology for automotive refinish facilities because of the intermittent nature of the emissions. As to carbon absorption, the study fails to consider adequately the costs associated with maintaining such a system, the decreasing ability of the carbon filters to absorb pollutants each time they are cleaned, and the hazardous waste that would be generated by the use of the system.

Despite the admitted problems with add-on controls, we believe that such technologies should be recognized in the CTG as a voluntary alternative compliance option. As the population of automotive refinish facilities changes, in part due to the VOC limits, and as the technology of add-on controls improves, this technology could become more viable and we believe that the technology should be recognized as a voluntary alternative compliance method. The modified version of the SCM which we are suggesting as the model for the CTG contains such an alternative.

Discussions of Costs

The study's discussion of the additional costs that would be associated with moving to more waterborne coatings do not address what will perhaps be the greatest costs associated with their use -- losses in shop productivity. For shops without drying equipment the use of these products could well cut their ability to refinish vehicles to one half or a third of what it is today. Additionally, the costs of R&D that are incurred by the manufacturers of the coatings are not counted nor are the costs that will be incurred in introducing these more difficult to use products, including job failures that will inevitably accompany the widespread use of the products initially.

Appendix D of the Study

Appendix D of the study, whether intended or not, represents the distillation of a draft CTG that may be picked up by the states before the CTG process is completed. Our concerns here are particularly strong because of the requirement of the federal Clean Air Act Amendments of 1990 that call for the adoption of RACT by many ozone nonattainment areas by 1992 -- the so-called "RACT Catch-Up" requirements. In reconciling this 1992 requirement with the 1993 due dates for new CTGs, including the automotive refinish CTG, the EPA has stated that states may use draft CTGs. We have had some indication that the regulations set out in Appendix D will be substantially modified in the final

CTG. We strongly urge that Appendix D be eliminated from the study to avoid any confusion on the part of the states during the interim.

DUPONT

VOC DATA SHEETS

VOC

RULE 1151

H-17324
(7/90)

DU PONT

The following VOC data is being provided to you to meet the requirements of the South Coast Air Quality Management District's Rule 1151. It is divided into the following pages for easy reference.

Page 1	An explanation of each category of the Du Pont COATINGS USAGE CHART used to record daily VOC emissions.
Page 2	An example of a completed COATINGS USAGE CHART.
Page 3–6	VOC data for surface cleaner, precoat coating, primer, single stage, basecoat, and clear. This data is reported on **maximum VOC** and **pounds per gallon less water and exempt solvents basis.**
Page 7	Calculation for LBS of VOC when divided by the amount actually sprayed.
Page 8–9	VOC data for all staple products, including tints on an individual basis, rather than after mixing and thinning to make the product ready to spray. This data is reported on a **pounds per gallon basis.**
Page 10	VOC data for solvents. There is also a short list of products that contain either water or exempt solvents. This VOC data is reported on **BOTH a pounds per gallon basis** and **a pounds per gallon less water and exempt solvents basis.**

DUPONT

		Coatings: Paint, Primer Surface Prep, Cleanup Solvent			Catalyst/Hardener/Additive			Thinner/Reducer Solvent								
Date	Painter Name or Initials	Manuf. Type & Code	VOC (g/l or lbs/gal)	VOC less Water & less exempt Solvent	Manufacturer & Code	VOC (g/l or lbs/gal)	VOC less Water & less exempt Solvent	Manufacturer & Code	VOC (g/l or lbs/gal)	VOC less water & less exempt Solvent	Total amount of coatings used	Mix Ratio Coating/ Solvent	Gross Vehicular Weight	VOC "as applied"	VOC "as Applied" less water & less exempt solvent	Lbs of VOC
		Example 1														
7-1	John Doe	B 8635A	5.2	5.2	793S	1.9	1.9	V-8096S	6.9	6.9	1 qt.	8:1:2	II	5.2	5.2	1.3
		Example 2														
		210S	0.6	1.9	–	–	–	–	–	–	1 qt.	RTS	II	–	1.9	.5
		Example 3														
		B8635K	5.9	5.9	–	-	–	V-7160S	6.6	6.6	2 qts.	1:1	II	6.2	6.2	3.1
		Example 4														
		7500S	5.3	5.3	7575S	4.2	4.2	–	–	–	3 qts.	4:1	II	5.1	5.1	3.8

		Coatings: Paint, Primer Surface Prep. Cleanup Solvent			Catalyst/Hardener/Additive			Thinner/Reducer Solvent								
Date	Painter Name or Initials	Manuf. Type & Code	VOC (g/l or lbs/gal)	VOC less Water & less exempt Solvent	Manufacturer & Code	VOC (g/l or lbs/gal)	VOC less Water & less exempt Solvent	Manufacturer & Code	VOC (g/l or lbs/gal)	VOC less water & less exempt Solvent	Total amount of coatings used (quarts or gal)	Mix Ratio Coating/ Solvent	Gross Vehicular Weight	VOC "as applied"	VOC "as Applied" less water & less exempt solvent	Lbs. of VOC
A	B	C	D	E	F	G	H	I	J	K	L	M	N	O	P	Q

Coatings Usage Chart Explanation

A. The date in which the material is sprayed.

B. The name or initials of the painter actually spraying.

C. The formula or product number. (Include the total alpha-numeric formula.)

D. The maximum VOC of the individual coating without reducer or catalyst, as listed in the Du Pont VOC Data Sheet. (The ColorNet computer or microfiche lists VOC of each color coating.)

E. The VOC in this column is the same as "D" *

F. This column is for hardeners or catalysts.

G. The VOC of the individual hardener or catalyst, obtained from VOC data sheet.

H. The VOC in this column is the same as "G" *

I. List the Du Pont solvent number.

J. The VOC of the thinner/reducer as stated on the VOC data sheet.

K. The VOC in this column is the same as "J".*

L. This column lists the amount of material actually sprayed.

M. Mixing ratio of all components. This information is listed on the VOC data sheet.

N. There are two categories:

"I" greater than or equal to 8500 lbs. G.V.W. (> or = 8500 lbs.)

"II" less than 8500 lbs. G.V.W. (< 8500 lbs.)

O. VOC "as applied" means the ready to spray VOC of the material applied in relation to the mixing ratio and VOC of the individual components. Also called "ready to spray" or "RTS"

P This column is the same as "O".*

Q. This column represents the total pounds of VOC emitted, based on the "ready to spray", pounds per gallons of the coating and quantity actually sprayed.
For example: the ready to spray VOC of 7500S is 5.1. Three quarts were actually sprayed, see example 4 on page 2.

* The column is different only when recording the following list of products which do contain water or exempt solvent:

210S	225S	227S	616S	3929S	5717S
224S	226S	244S	620S	5662S	

DUPONT

VOC DATA SHEET

RULE 1151

SURFACE CLEANER				Catalyst/Hardener/Additive			Thinner/Reducer Solvent							
MANUFACTURER TYPE &	CODE	MAX. VOC (g/l or lbs/gal)	VOC less Water & less exempt Solvent	Manufacturer & Code	VOC (g/l or lbs/gal)	VOC less Water & less exempt Solvent	Manufacturer & Code	VOC (g/l or lbs/gal)	VOC less water & less exempt Solvent	Total amount of coatings used (quarts or gal)	Mix Ratio Coating/ Solvent	Gross Vehicular Weight	VOC "as applied"	VOC "as Applied" less water & less exempt solvent	Lbs. of VOC
PREP-SOL' II	3929S	1.2	4.9	—	—	—	—	—			RTS		1.2	4.9	
PRETREATMENT COATINGS															
	5717S	1.4	3.7	—	—		WATER	—			1:1		3.7	3.7	
	224S	0.0	0.0	—	—		—	—			RTS		0.0	0.0	
	225S	1.3	3.9	—	—		WATER	—			1:2		3.9	3.9	
	226S	0.0	0.0	—	—		—	—			RTS		0.0	0.0	
	227S	0.0	0.0	—	—		—	—			RTS		0.0	0.0	
	244S	5.7	6.5	—	—		—	—			RTS		6.5	6.5	
PRECOAT COATING															
VARIPRIME'	615S	5.2	5.2	616S	6.5	6.6	—	—			1:1		5.8	5.9	
	615S	5.2	5.2	620S	6.2	6.3	—	—			1:1		5.7	5.7	
PRIMER															
WATERBORNE	210S	0.6	1.9	—	—	—	—	—			RTS		0.6	1.9	

DUPONT

VOC DATA SHEET

RULE 1151

SURFACE CLEANER				Catalyst/Hardener/Additive			Thinner/Reducer Solvent							
MANUFACTURER TYPE &	CODE	MAX. VOC (g/l or lbs/gal)	VOC less Water & less exempt Solvent	Manufacturer & Code	VOC (g/l or lbs/gal)	VOC less Water & less exempt Solvent	Manufacturer & Code	VOC (g/l or lbs/gal)	VOC less water & less exempt Solvent	Total amount of coatings used (quarts or gal)	Mix Ratio Coating/ Solvent	Gross Vehicular Weight	VOC "as applied"	VOC "as Applied" less water & less exempt solvent	Lbs. of VOC
PREP-SOL' II	3929S	1.2	4.9	—	—	—	—	—			RTS		1.2	4.9	
PRETREATMENT COATINGS															
	5717S	1.4	3.7	—	—		WATER	—			1:1		3.7	3.7	
	224S	0.0	0.0	—	—		—	—			RTS		0.0	0.0	
	225S	1.3	3.9	—	—		WATER	—			1:2		3.9	3.9	
	226S	0.0	0.0	—	—		—	—			RTS		0.0	0.0	
	227S	0.0	0.0	—	—		—	—			RTS		0.0	0.0	
	244S	5.7	6.5	—	—		—	—			RTS		6.5	6.5	
PRECOAT COATING															
VARIPRIME'	615S	5.2	5.2	616S	6.5	6.6	—	—			1:1		5.8	5.9	
	615S	5.2	5.2	620S	6.2	6.3					1:1		5.7	5.7	
PRIMER															
WATERBORNE	210S	0.6	1.9	—	—	—	—	—			RTS		0.6	1.9	

ATTACHMENT B

Article from BodyShop Business

Common Complaints, Specific Solutions

by Mark Clark

In these days of fast-paced produce/deliver auto repainting, it's hard to get a simple explanation for the cause of common painters' problems. In this series of articles, we are going look at some of the most common complaints and try to explain in simple terms (no degree in chemisty required) what went wrong and why. These discussions are as generic as possible, and no one brand of paint is being promoted over another.

And that leads us to the absolute quickest way to reduce all your paint problems, no matter what brand you're using or what part of the country you're in.

You can reduce your painting related problems by — ready? — 50 percent. Sound like something you'd be interested in? Instead of 10 problems a week or 10 problems a month, you can skip right down to only 5 problems.

How? It's easy, it's simple, and it's guaranteed to work. Use one brand all the way through, follow a system! When all the undercoats, solvents, topcoats and clears are **guaranteed** compatible, you'll have 50 percent fewer problems. Problems like adhesion, durability and re-coatability drop to the very minimum.

The notion that any shop painter can don the chemical engineer's hat and start mixing products and systems goes back to the days when this business was much simpler.

Back in the days when most undercoats were a lacquer base and most topcoats were either lacquer or a simple acrylic enamel, shop painters figured out that they could substitute a cheaper solvent from some other manufacturer and then color with yet a third brand and seldom have problems.

Like the paint reps say, one of the hardest guys to deal with is the painter who combined several brands and didn't have a problem, once or twice or even ten times. Then, when his "system" doesn't work, he can't accept the fact that he was just lucky each of those other times.

The reason that intermixing is such a tremendous risk these days can be traced back to the vehicle manufacturer. The consumer keeps demanding a better looking, more durable, more corrosion-resistant finish. The manufacturers have been able to deliver OEM finishes hundreds of times better than just a few years ago. Now here comes that super high-tech finish into the body shop to be repaired "as good as new."

The aftermarket paint companies have really had to scramble to create air dry (no heat or electricity like OEM) finishes durable enough to match original equipment. This, as you might imagine, was quite a trick.

What this means to body shop painters is that there is no margin for error in applying or mixing today's products. The paint company chemist was able to create a product to suit, but only if you do exactly as he says. Not only must the painter combine the correct solvent, catalyst and topcoat in the correct percentages, but it must be applied over the correctly mixed and applied undercoats at the correct time.

There is only one right way to use today's finishes: exactly according to directions and using only one brand. Besides reducing your paint problems 50 percent, several other benefits also occur. You will have fewer products (read that — dollars) in your inventory,

(continued on pg. 82)

(continued from pg. 80)
and since the same system is used all the time, everyone gets good at it and more work is produced in less time. Knowing what one line will do under a variety of conditions is better than guessing what a variety of products will do under the same condition.

Now, having solved one half of your paint problems, let's take a look at some of the other ones that are left.

It's simple to solve half your paint problems.

One of the most common and frustrating paint problems is die-back. Die-back means that over time the paint job loses the gloss it once had. Only one thing causes die-back: trapped solvent. It is always at the root of any die-back. Well that was simple, right?

The mystery comes up when you try to decide *where* the solvent was trapped. It could be in the primer, the primer-surfacer, the sealer, the color coats or the clearcoats. Choose one or two or more! All your paint products have solvent in them, some you add more solvent to. If you rushed the flash off time on any of the products, (who, you?) there is still solvent that wants to escape into the air. When it does, it has the same effect on the finish as wiping the car with a solvent-soaked rag.

Maybe the most common die-back occurs when a complete paint job is shot late in the day because the dust in the shop is at a minimum.

The painter is the last guy in the shop and after the third coat, cleans his equipment, shuts off the fan and the light and heads home. When he returns the next morning, his great looking, super glossy paint job has died back and dulled down.

What happened was that the bulk of the solvent rose up out of the paint film into the air where it should have been swept away by the air movement created by the fan. With no fan running, (to keep the job cleaner he thought) the solvent rose to the top of the paint film and just lay there — thus, die-back.

The solution is to run the fan for a good 45 - 60 minutes after the last coat. At the end of the hour, shut off the fan and open the booth doors. You're out of dust by then, and the air moving in the open doors will help the last of the solvent to evaporate off.

Air movement plays a big role in die-back. Take this example: You're painting a car in a two-stall garage with little or no air movement. The temperature is 70 F. All you need is the correct solvent for 70 F and the correct flash time between coats.

Now, the same car, the same 70 F, but you're in a crossdraft spray booth with average air movement. You need to choose a solvent as if it were 10° warmer (80 F) because of the air's drying effect.

Third time, same car, same 70 F, but in a downdraft booth with lots of air movement. You now need a much slower drying solvent; in fact, almost 20° warmer. You must reduce as if it were 90 F in the booth. All that air whistling past causes the surface of the paint film to skin over before all the solvent can evaporate out. That trapped solvent will eventually work its way out, causing extra work for you, and distress for your customer. Beat this problem by choosing the correct solvent for each of your undercoats and topcoats. Equally important, wait the recommended flash time (or more) between coats.

Another common problem, solvent popping, is caused by exactly the same trapped solvent that causes die-back. Only in this case, there is so much solvent trapped under the prematurely dried "skin" that it will literally burst out of the paint film, leaving little craters with a hole on top.

Solvent popping is violent die-back. The solution is to immediately move to a slower drying solvent.

When you must re-do something because of die-back or solvent popping, sand the finish as soon as you can and let it sit around the shop, sanded, for as long as possible. When you sand, you open up the paint film, giving the solvent a hole to escape through.

Another common problem is clearcoat de-laminating (peeling) off the color coat. There are two likely causes. How soon the customer comes back gives you a good clue as to which one you've got.

If the customer is back within 8 - 10 weeks, it is most likely a compatibility problem. In other words, the clearcoat never had an intercoat bond with the basecoat and was just "sitting" on the base color.

There are two kinds of adhesion: mechanical and chemical. Mechanical means that you have abraded (sanded) the surface to increase the area of contact with the next product (i.e., up one side of the sand-scratch and down the other means more surface area to meet the new coat). Chemical adhesion depends on putting a chemically compatible product over another in the correct time frame. You may have the correct product, but let your base color dry too long and the clear can get no bite into it.

If it has been longer than 8 to 10 weeks before the customer is back with peeling, chances are the clearcoat wasn't applied thick enough.

The main enemy of your paint finish is the ultra violet rays of the sun. It's hard to put very many UV

(continued on pg. 105)

(continued from pg. 82)
screeners in a clearcoat because then it isn't clear anymore. Some of your clearcoat's durability depends on having a thick enough film to withstand the UV.

What happens many times is that the clearcoat was applied at an acceptable mil build but was later wet sanded and buffed to get rid of dirt.

If, for example, you had two mils of clear in two coats, you'll take one mil off when you sand and polish. The one mil you have left will not stand up very long to the sun. Now the UV rays come streaming through the clearcoat and oxidize the base color. The sun's rays destroy the binder in the color coat, leaving only the chalky pigment to which the clear won't stick, and off it comes! The solution is to put on more clear.

If you know you're going to buff, add an extra coat for the buffer to remove. This will leave enough clear film behind to hold out against the sun. Don't worry about getting your film so thick that it will crack, today's urethane enamel clears remain flexible up to a build of 20 mils or more. There is not, however, much to be gained in gloss by going past three to four coats.

Next time we'll look into the most common lifting problem, discuss a clever solution for blushing and examine some clues to where your fisheyes might be coming from. ■

BodyShop Business *is starting a question and answer forum for your painting questions. If you have something that you've always wanted to know and can't seem to find an answer for, send us the question. We can not answer questions about specific brand-name products — address those to your paint rep or jobber. Ask us the "how come" kind of questions. Using a panel of experts, we'll answer in print the best questions. Thanks for your interest!*

Classified Page

SELL YOUR USED EQUIPMENT
Spraybooths
Laser & Mechanical Measuring Systems
Frame & Unibody Repair Systems
Computer Systems & Software
WE HAVE BUYERS!
We do equipment appraisals.
EQUIPMENT REGISTER
30 N. Raymond Ave., Suite 605,
Pasadena, CA 91103
818-796-8804

Circle 95 on Reader Service Card

DISTRIBUTORS WANTED
Aggressive, successful Distributors sought by leading manufacturer to market our full line of high-demand, state-of-the-art collision repair systems and equipment.
CALL (800) 841-3220
KAR GRABBER
Grabber Mfg. Co., Inc.
Route 3, Box 13
Brunswick, GA 31523

DUZ-MOR
Used & refurbished DUZ-MOR Collision Repair Systems from $20,000.00 includes accessories and a ONE YEAR WARRANTY. 2, 3 or 4 tower models available.
MERIT LEASING CO.
Call (515) 262-4899

Circle 96 on Reader Service Card

Classified Ad Space
BodyShop Business classified advertising is available for $195 per insertions. Six or more ads per year are $175 per insertion.

Classifieds measure 2-1/8 x 1-1/2.

Ads can be purchased in double units (2-1/8 x 3") for $390 per insertion.

Advertising deadline is the first of every month.

Contact BodyShop Business Advertising Department at 216-535-6117.

THIS WAS A CAMARO!
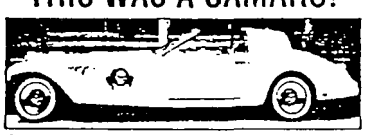
Convert any '82 to '89 Camaro or Firebird into America's premiere classic motorcar, the Phantom Classic. BIG PROFITS!! A relatively simple yet amazing conversion.
CALL NOW (305) 797-6354

Distribution Company
Distributors Earn $40,000 - $100,000 . . . yearly with recognized items. Local Dealers, Bodyshops and Carwashes use these products. Every Day! Company helps you get established. $25K Investment handles new van, inventory and working capital.
PRODUCTION CAR CARE PRODUCTS
USA (800) 331-7364 CA (209) 943-7337

NEW IDEAS?
Pull-It Corporation, manufacturers of the internationally known Mo-Clamp line of autobody clamps and accessories, would like to help you bring your ideas to the marketplace. Several of the products we currently offer were developed from ideas brought to us by people such as yourself. With our expertise in design, manufacture, and distribution, we can help turn your ideas into money. We welcome the opportunity to work with you. Call Al Tessman, R&D Manager at (503) 644-9167, or (800) 678-5548
mo-clamp
6920 S.W. 111th Avenue • Beaverton, Oregon 97005

DRAFT PROPOSED DETERMINATION OF REASONABLY AVAILABLE CONTROL TECHNOLOGY AND BEST AVAILABLE RETROFIT CONTROL TECHNOLOGY FOR AUTOMOTIVE REFINISHING OPERATIONS

I. APPLICABILITY

The provisions of the proposed determination shall apply to all automobile refinishing operations that include the finishing or refinishing of motor vehicles, mobile equipment and their parts and components except as specified in Section IV A. This determination shall be considered RACT except where indicated as BARCT.

II. DEFINITIONS

A. Antiglare/Safety Coating means a coating which does not reflect light.

B. Basecoat/Clearcoat System means a topcoat system composed of a pigmented basecoat portion and a transparent clearcoat portion. Basecoat/clearcoat systems' VOC content shall be calculated according to the following formula:

$$VOC\ T_{bc/cc} = \frac{VOC_{bc} + 2\ VOC_{cc}}{3}$$

Where:

$VOC\ T_{bc/cc}$ is the sum of the VOC content as applied in the basecoat (bc) and clearcoat (cc) system.

VOC_{bc} is the VOC content as applied of any given basecoat.

$2VOC_{cc}$ is two times the VOC content as applied of any given clearcoat.

C. Camouflage Coating means a coating applied on motor vehicles to conceal such vehicles from detection.

D. Catalyst means a substance whose presence initiates the reaction between chemical compounds.

E. Color Match means the ability of a repair coating to blend into an existing coating so that color difference is not visible.

F. Electrostatic Application means the application of charged atomized paint droplets which are deposited by electrostatic attraction.

G. Executive Officer means the Executive Officer or Air Pollution Control Officer, or his or her delegate, of an air quality management district or an air pollution control district.

H. Extreme Performance Coating means any coating used on the surface of a Group II vehicle, mobile equipment or their parts or components which during intended use is exposed to any of the following conditions:

(1) Industrial grade detergents, cleaners or abrasive scouring agents, and/or
(2) Extreme environmental conditions as determined by the APCO during the vehicle's principal use.

I. Final Stage Manufacture means where an incomplete vehicle chassis is delivered to a manufacturer for installation and paint of a truck body and/or components to form a completed vehicle.

J. Grams of VOC Per Liter of Coating less water and Less Exempt Compounds means the weight of VOC per combined volume of VOC and coating solids is calculated by the following equation:

$$G_{voc} = (W_s - W_w - W_{es}) / (V_m - V_w - V_{es})$$

where:

G_{voc} = Grams VOC per liter of coating less water and exempt compounds

W_s = weight of volatile compounds in grams
W_w = weight of water in grams
W_{es} = weight of exempt compounds in grams
V_m = volume of material in liters
V_w = volume of water in liters

V_{es} = volume of exempt compounds (as defined in VOC definition, Section II GG) in liters

K. Graphic Design Application means the application of logos, letters, numbers and graphics to a painted surface, with or without the use of a template.

L. Ground Support means vehicles used in support of aircraft activities at airports.

M. Group I Vehicles means passenger cars, large/heavy duty truck cabs and chassis, light and medium duty trucks and vans, and motorcycles.

N. Group II Vehicles and Equipment means public transit buses and mobile equipment.

O. High-Volume, Low-Pressure (HVLP) Spray means equipment used to apply coatings by means of a gun which operates between 0.1 and 10 psig air pressure and which operates at a maximum fluid delivery pressure of 50 psig.

P. Large/Heavy Duty Trucks means any truck having a manufacturer's gross vehicle weight rating of over 10,000 pounds.

Q. Light and Medium Duty Trucks and Vans means any truck or van having a manufacturer's gross vehicle weight rating of 10,000 pounds or less.

R. Metallic/Iridescent Topcoat means any coating which contains more than 5 g/l (.042 lb/gal) of metal or iridescent particles, as applied, where such particles are visible in the dried film.

S. Mobile Equipment means any equipment which may be drawn or is capable of being driven on a roadway, including, but not limited to, truck bodies, truck trailers, utility bodies, camper shells, mobile cranes, bulldozers, street cleaners, golf carts and implements of husbandry.

T. Precoat means any coating which is applied to bare metal primarily to deactivate the metal surface for corrosion resistance to a subsequent water-base primer.

U. Pretreatment Wash Primer means any coating which contains a minimum of 0.5 percent acid by weight, is necessary to provide surface etching and is applied directly to bare metal surfaces to provide corrosion resistance and adhesion.

V. Primer means any coating applied prior to the application of a topcoat for the purpose of corrosion resistance and adhesion of the topcoat.

W. Primer Sealer means any coating applied prior to the application of a topcoat for the purpose of corrosion resistance, adhesion of the topcoat, color uniformity, and to promote the ability of an undercoat to resist penetration by the topcoat.

X. Primer Surfacer means any coating applied prior to the application of a topcoat for the purpose of corrosion resistance, adhesion of the topcoat, and which promotes a uniform surface by filling in surface imperfections.

Y. Reducer means the solvent used to thin enamel.

Z. Refinishing means any coating of vehicles, their parts and components, or mobile equipment, including partial body collision repairs, for the purpose of protection or beautification and which is subsequent to the original coating applied at an Original Equipment Manufacturing (OEM) plant coating assembly line.

AA. Specialty Coatings means coatings which are necessary due to unusual job performance requirements. Said coatings include, but are not limited to, adhesion promoters, uniform finish blenders, elastomeric materials, gloss flatteners, bright metal trim repair, and anti-glare/safety coatings.

BB. Spot/Panel Repair means the non-assembly line process of repairing and restoring a portion of a motor vehicle to predamaged condition.

CC. Three-Stage Coating System means a topcoat system composed of a pigmented basecoat portion, a semi-transparent midcoat portion, and a transparent clearcoat portion. Three-stage coating systems' VOC content shall be calculated according to the following formula:

$$VOC\ T_{3\text{-}stage} = \frac{VOC_{bc} + VOC_{mc} + 2\ VOC_{cc}}{4}$$

Where:

$VOC\ T_{3\text{-}stage}$ is the sum of the VOC content as applied in the basecoat, midcoat and clearcoat system.

VOC_{mc} is the VOC content as applied of any given midcoat.

$2\ VOC_{cc}$ is two times the VOC content as applied of any given clearcoat.

DD. Topcoat means any coating applied over a primer of an original OEM finish for the purpose of protection or appearance. For the purposes of this rule, base coat/clear coat systems and three-stage coating systems shall be considered jointly as a topcoat.

EE. Touch-up Coating means a coating applied by brush or hand held, non-refillable aerosol cans to repair minor surface damage and imperfections.

FF. Transfer Efficiency means the ratio of the amount of coating solids adhering to the object being coated to the total amount of coating solids used in the application process, expressed as a percentage.

GG. Volatile Organic Compounds mean any compound containing at least one atom of carbon, except methane, carbon monoxide, carbon dioxide, carbonic acid, metallic carbides or carbonates, ammonium

carbonate, 1.1.1-trichloroethane, methylene chloride, trichlorofluoromethane (CFC-11), dichlorodifluoromethane (CFC-12), chlorodifluoromethane (CFC-22), trifluoromethane (CFC-23), trichlorotrifluoroethane(CFC-113),dichlorotetrafluoroethane (CFC-114), chloropentafluororethane (CFC-115), dichlorotrifluoroethane (HCFC-123), tetrafluoroethane (HFC-134a), dichlorofluoroethane (HCFC-141b),and chlorodifluororethane (HCFC-142b).

III. STANDARDS

A. Limits. Effective six months from the date of adoption except where dates are specified, any person who applies coatings to Group I or II vehicles, mobile equipment, their parts and components, shall comply with Sections III A (1) or A (2) below:

(1) Group I Vehicles. A person shall not refinish Group I vehicles, their parts and components, or Group II vehicles and mobile equipment where color match is required, using any coating with a VOC content in excess of the following limits, expressed as grams of VOC per liter (or pounds per gallon) of coating applied, excluding water and exempt compounds (as defined in VOC definition, Section II GG), unless emissions to the atmosphere are controlled to an equivalent level by air pollution abatement equipment with an abatement device efficiency of at least 85 percent and which has been approved in writing by the Executive Officer.

	RACT	BARCT	
		January 1, 1992	January 1, 1995
	VOC	VOC	VOC
Pretreatment Wash Primer	780 g/l (6.5 lbs/gal)	780 g/l (6.5 lbs/gal)	420 g/l (3.5 lbs/gal
Precoat	780 g/l (6.5 lbs/gal)	780 g/l (6.5 lbs/gal)	420 g/l (3.5 lbs/gal
Primer/primer Surface	720 g/l (6.0 lbs/gal)	340 g/l (2.8 lbs/gal)	250 g/l (2.1 lbs/gal
Primer Sealer	720 g/l (6.0 lbs/gal)	420 g/l (3.5 lbs/gal)	340 g/l (2.8 lbs/gal
Topcoat	720 g/l (6.0 lbs/gal)	600 g/l (5.0 lbs/gal)	460 g/l (3.8 lbs/gal
Metallic/Iridescent Topcoat	720 g/l (6.0 lbs/gal)	600 g/l (5.0 lbs/gal)	540 g/l (4.5 lbs/gal

(2) Group II Vehicles and Mobile Equipment. A person shall not finish or refinish Group II vehicles and equipment or their parts and components where color match is not required, using any coating with a VOC content in excess of the following limits, expressed as grams of VOC per liter (or pounds per gallon) of coating applied, excluding water and exempt compounds (as defined in VOC definition, Section II GG).

unless emissions to the atmosphere are controlled to an equivalent level by air pollution abatement equipment with an abatement device efficiency of at least 85 percent and which has been approved in writing by the Executive Officer.

	RACT	BARCT	
		January 1, 1992	January 1, 1995
	VOC	VOC	VOC
Pretreatment Wash Primer	780 g/l (6.5 lbs/gal)	780 g/l (6.5 lbs/gal)	420 g/l (3.5 lbs/gal
Precoat	780 g/l (6.5 lbs/gal)	780 g/l (6.5 lbs/gal)	420 g/l (3.5 lbs/gal
Primer	340 g/l (2.8 lbs/gal)	340 g/l (2.8 lbs/gal)	250 g/l (2.1 lbs/gal
Topcoat	420 g/l (3.5 lbs/gal)	420 g/l (3.5 lbs/gal)	340 g/l (2.8 lbs/gal
Metallic/Iridescent Topcoat	650 g/l (5.4 lbs/gal)	420 g/l (3.5 lbs/gal)	420 g/l (3.5 lbs/gal
Extreme performance	750 g/l (6.2 lbs/gal)	750 g/l (6.2 lbs/gal)	420 g/l (3.5 lbs/gal
Camouflage	420 g/l (3.5 lbs/gal)	420 g/l (3.5 lbs/gal)	420 g/l (3.5 lbs/gal

B. Lacquer Spot/Panel Repair Limits. Effective six months from the date of adoption, a person shall not spot/panel repair Group I vehicles with existing nitrocellulose or synthetic lacquer finishes using lacquer coatings in excess of the following limits, expressed as grams of VOC per liter (or pounds per gallon) of coating applied, excluding water and exempt compounds (as defined in VOC definition, Section II GG), unless emissions to the atmosphere are controlled to an equivalent level by air pollution abatement equipment with an abatement device efficiency at least 85 percent and which has been approved in writing by the Executive Officer:

	VOC
Pretreatment Wash Primer	780 g/l (6.5 lbs/gal)
Precoat	780 g/l (6.5 lbs/gal)
Primer/Primer Surfacer	720 g/l (6.0 lbs/gal)
Primer Sealer	780 g/l (6.5 lbs/gal)
Topcoat	780 g/l (6.5 lbs/gal)

Effective twelve months from the date of adoption, a person shall not spot/panel repair Group I vehicles with existing lacquer finishes using any coating with a VOC content in excess of the standards set forth in Section III A (1).

C. Transfer Efficiency. Effective twelve months from the date of adoption for all coatings, a person shall not apply any coating to any Group I or II vehicles or mobile equipment or their parts and components unless one of the following methods is used:

(1) Electrostatic application equipment, operated in accordance with the manufacturer's recommendations;

(2) High Volume Low Pressure (HVLP) spray equipment, operated in accordance with the manufacturer's recommendations;

(3) Any other coating application which has been demonstrated to the satisfaction of the Executive Officer and for which written approval of the Executive Officer has been obtained.

D. Prohibition of Specification. No person shall solicit or require for use or specify the application of a coating on a Group I or II vehicle, mobile equipment, or part or component thereof if such use or application results in a violation of the provisions of this determination. The prohibition of this Section will apply to all written or oral contracts under the terms of which any coating which is subject to the provisions of this determination is to be applied to any motor vehicle, mobile equipment, or part or component at any physical location within the District.

E. Prohibition of Sale. A person shall not offer for sale or sell within the District any coating if such product is prohibited by any of the provisions of this determination. The prohibition of this section shall apply to the sale of any coating which will be applied at any physical location within the jurisdiction of the local air pollution control agencies. This requirement shall not apply to the application of coatings where emissions to the atmosphere are controlled to an equivalent level of this determination by air pollution abatement equipment that has been approved in writing by the Executive Officer.

F. Compliance Statement Requirement. The manufacturer of coatings subject to this determination shall include a designation of VOC (as defined in Sections II GG) as supplied, including coating components, expressed in grams per liter or pounds per gallon, excluding water and exempt compounds, on data sheets.

G. Surface Preparation and Clean-up Solvent. The requirements of this section shall apply to any person using solvent for surface preparation and cleanup.

(1) A person shall not use an organic compound for surface preparation with a VOC content in excess of 200 grams per liter (1.67 pounds per gallon).
(2) A person shall use closed, nonabsorbent containers for the storage or disposal of cloth or paper used for solvent surface preparation and cleanup.
(3) A person shall store fresh or spent solvent in closed containers.
(4) A person shall not use organic compounds for the cleanup of spray equipment including paint lines unless an enclosed system is used for cleanup. The system must enclose spray

guns, cups, nozzles, bowls and other parts during washing, rinsing and draining procedures. Equipment used shall minimize the evaporation of organic compounds to the atmosphere.

H. Small Production/Utility Bodies. The standards set forth in Section III A (1) shall apply provided production of utility bodies where the coating is required to match that of the vehicles upon which they will be mounted is less than or equal to 20 vehicles per day. The standards set forth in Section III A (2) shall apply provided production of utility bodies is greater than 20 vehicles per day.

I. Specialty Coatings means a person shall not use any specialty coating with a VOC content in excess of 840 g/l (7.0 lbs/gal), excluding water and exempt compounds. Use of all specialty coatings except antiglare/safety coatings shall not exceed 5.0 percent of all coatings applied, on a daily basis. The application of topcoats with a specialty coating used as an additive shall be subject to the topcoat limits in Sections III A (1) or A (2).

J. Extreme Performance Coating Requirements means any person seeking to use an extreme performance coating in any coating operation which is subject to this rule shall comply with the requirements of Section VI A.

IV. EXEMPTIONS

A. Original Equipment Manufacturer. The provisions of this Rule shall not apply to Original Equipment Manufacturer (OEM) coatings applied at manufacturing or assembly plants subject to a Motor Vehicle Assembly Plan Rule.

V. TEST METHODS

A. Analysis of Samples. Samples of volatile organic compounds as specified in Sections III A (1) or III A (2) shall be analyzed as prescribed by EPA Reference Method 24 or method determined to be equivalent and approved by the Executive Officer.

B. Determination of Emissions. Emissions of volatile organic compounds as specified in Section III A (1) or III A (2) shall be measured as prescribed by EPA Reference Method 25 or method determined to be equivalent or more stringent and approved by the Executive Officer.

C. Determination of Transfer Efficiency. Transfer efficiency as required by Section III C (3) shall be determined by a method approved by the Executive Officer.

D. Determination of Capture Efficiency. Capture efficiency as required by Section III A and B shall be determined by the method stated in subpart SSS (Magnetic Tape Coating Facilities) 40 CFR, Part 60, Section 60.713.

E. Determination of Iridescent Particles in Metallic/Iridescent Topcoat. Iridescent particles in metallic/iridescent topcoat as defined in Section II R shall be determined by the South Coast Air Quality Management District (SCAQMD) Spectrographic method contained in Section 3, Method 26 of the SCAQMD "Laboratory Method of Analysis for Enforcement Samples" manual.

F. Determination of Acid Concentration in Pretreatment Wash Primer. Acid concentration in pretreatment wash primer as defined in Section II U shall be determined by test method ASTM D-1613-85 (modified).

VI. ADMINISTRATIVE REQUIREMENTS

A. Extreme Performance Coating Petition. Any person seeking to use an extreme performance coating in any coating operation which is subject to the provisions of this rule shall comply with the following requirements:

(1) A petition shall be submitted to the Executive Officer stating the performance requirements, volume of coating and VOC level which is attainable.
(2) If the Executive Officer grants written approval, such petition will be repeated on an annual basis.
(3) If the Executive Officer grants written approval, such approval shall contain volume and VOC limit conditions.
(4) Records must be maintained as in Section VI (B).

B. Coating Records. Any person subject to Sections III A (1) and III A (2) shall comply with the following requirements:

(1) The person shall maintain and have available during an inspection, a current list of coatings in use which provides all of the coating data necessary to evaluate compliance, including the following information, as applicable:

(a) coating, catalyst and reducer used
(b) mix ratio of components used
(c) VOC content of coating as applied.

(2) The person shall maintain records on a daily basis including the following information:

(a) coating and mix ratio of components in the coating used
(b) quantity of each coating applied.

(3) The person shall maintain records on a monthly basis showing the type and amount of solvent used for cleanup and surface preparation.

(4) Such records shall be retained and available for inspection by the Executive Officer for the previous 24 month period.

Common Complaints, Specific Solutions

by Mark Clark

In these days of fast-paced produce/deliver auto repainting, it's hard to get a simple explanation for the cause of common painters' problems. In this series of articles, we are going look at some of the most common complaints and try to explain in simple terms (no degree in chemisty required) what went wrong and why. These discussions are as generic as possible, and no one brand of paint is being promoted over another.

And that leads us to the absolute quickest way to reduce all your paint problems, no matter what brand you're using or what part of the country you're in.

You can reduce your painting related problems by — ready? — 50 percent. Sound like something you'd be interested in? Instead of 10 problems a week or 10 problems a month, you can skip right down to only 5 problems.

How? It's easy, it's simple, and it's guaranteed to work. Use one brand all the way through, follow a system! When all the undercoats, solvents, topcoats and clears are guaranteed compatible, you'll have 50 percent fewer problems. Problems like adhesion, durability and re-coatability drop to the very minimum.

The notion that any shop painter can don the chemical engineer's hat and start mixing products and systems goes back to the days when this business was much simpler.

Back in the days when most undercoats were a lacquer base and most topcoats were either lacquer or a simple acrylic enamel, shop painters figured out that they could substitute a cheaper solvent from some other manufacturer and then color with yet a third brand and seldom have problems.

Like the paint reps say, one of the hardest guys to deal with is the painter who combined several brands and didn't have a problem, once or twice or even ten times. Then, when his "system" doesn't work, he can't accept the fact that he was just lucky each of those other times.

The reason that intermixing is such a tremendous risk these days can be traced back to the vehicle manufacturer. The consumer keeps demanding a better looking, more durable, more corrosion-resistant finish. The manufacturers have been able to deliver OEM finishes hundreds of times better than just a few years ago. Now here comes that super high-tech finish into the body shop to be repaired "as good as new."

The aftermarket paint companies have really had to scramble to create air dry (no heat or electricity like OEM) finishes durable enough to match original equipment. This, as you might imagine, was quite a trick.

What this means to body shop painters is that there is no margin for error in applying or mixing today's products. The paint company chemist was able to create a product to suit, but only if you do exactly as he says. Not only must the painter combine the correct solvent, catalyst and topcoat in the correct percentages, but it must be applied over the correctly mixed and applied undercoats at the correct time.

There is only one right way to use today's finishes; exactly according to directions and using only one brand. Besides reducing your paint problems 50 percent, several other benefits also occur. You will have fewer products (read that — dollars) in your inventory,

(continued on pg. 82)

(continued from pg. 80)
and since the same system is used all the time, everyone gets good at it and more work is produced in less time. Knowing what one line will do under a variety of conditions is better than guessing what a variety of products will do under the same condition.

Now, having solved one half of your paint problems, let's take a look at some of the other ones that are left.

It's simple to solve half your paint problems.

One of the most common and frustrating paint problems is die-back. Die-back means that over time the paint job loses the gloss it once had. Only one thing causes die-back: trapped solvent. It is always at the root of any die-back. Well that was simple, right?

The mystery comes up when you try to decide *where* the solvent was trapped. It could be in the primer, the primer-surfacer, the sealer, the color coats or the clearcoats. Choose one or two or more! All your paint products have solvent in them, some you add more solvent to. If you rushed the flash off time on any of the products, (who, you?) there is still solvent that wants to escape into the air. When it does, it has the same effect on the finish as wiping the car with a solvent-soaked rag.

Maybe the most common die-back occurs when a complete paint job is shot late in the day because the dust in the shop is at a minimum.

The painter is the last guy in the shop and after the third coat, cleans his equipment, shuts off the fan and the light and heads home. When he returns the next morning, his great looking, super glossy paint job has died back and dulled down.

What happened was that the bulk of the solvent rose up out of the paint film into the air where it should have been swept away by the air movement created by the fan. With no fan running, (to keep the job cleaner he thought) the solvent rose to the top of the paint film and just lay there — thus, die-back.

The solution is to run the fan for a good 45 - 60 minutes after the last coat. At the end of the hour, shut off the fan and open the booth doors. You're out of dust by then, and the air moving in the open doors will help the last of the solvent to evaporate off.

Air movement plays a big role in die-back. Take this example: You're painting a car in a two-stall garage with little or no air movement. The temperature is 70 F. All you need is the correct solvent for 70 F and the correct flash time between coats.

Now, the same car, the same 70 F, but you're in a crossdraft spray booth with average air movement. You need to choose a solvent as if it were 10° warmer (80 F) because of the air's drying effect.

Third time, same car, same 70 F, but in a downdraft booth with lots of air movement. You now need a much slower drying solvent; in fact, almost 20° warmer. You must reduce as if it were 90 F in the booth. All that air whistling past causes the surface of the paint film to skin over before all the solvent can evaporate out. That trapped solvent will eventually work its way out, causing extra work for you, and distress for your customer. Beat this problem by choosing the correct solvent for each of your undercoats and topcoats. Equally important, wait the recommended flash time (or more) between coats.

Another common problem, solvent popping, is caused by exactly the same trapped solvent that causes die-back. Only in this case, there is so much solvent trapped under the prematurely dried "skin" that it will literally burst out of the paint film, leaving little craters with a hole on top.

Solvent popping is violent die-back. The solution is to immediately move to a slower drying solvent.

When you must re-do something because of die-back or solvent popping, sand the finish as soon as you can and let it sit around the shop, sanded, for as long as possible. When you sand, you open up the paint film, giving the solvent a hole to escape through.

Another common problem is clearcoat de-laminating (peeling) off the color coat. There are two likely causes. How soon the customer comes back gives you a good clue as to which one you've got.

If the customer is back within 8 - 10 weeks, it is most likely a compatibility problem. In other words, the clearcoat never had an intercoat bond with the basecoat and was just "sitting" on the base color.

There are two kinds of adhesion: mechanical and chemical. Mechanical means that you have abraded (sanded) the surface to increase the area of contact with the next product (i.e., up one side of the sand-scratch and down the other means more surface area to meet the new coat). Chemical adhesion depends on putting a chemically compatible product over another in the correct time frame. You may have the correct product, but let your base color dry too long and the clear can get no bite into it.

If it has been longer than 8 to 10 weeks before the customer is back with peeling, chances are the clearcoat wasn't applied thick enough.

The main enemy of your paint finish is the ultra violet rays of the sun. It's hard to put very many UV

(continued on pg. 105)

(continued from pg. 82)
screeners in a clearcoat because then it isn't clear anymore. Some of your clearcoat's durability depends on having a thick enough film to withstand the UV.

What happens many times is that the clearcoat was applied at an acceptable mil build but was later wet sanded and buffed to get rid of dirt.

If, for example, you had two mils of clear in two coats, you'll take one mil off when you sand and polish. The one mil you have left will not stand up very long to the sun. Now the UV rays come streaming through the clearcoat and oxidize the base color. The sun's rays destroy the binder in the color coat, leaving only the chalky pigment to which the clear won't stick, and off it comes! The solution is to put on more clear.

If you know you're going to buff, add an extra coat for the buffer to remove. This will leave enough clear film behind to hold out against the sun. Don't worry about getting your film so thick that it will crack, today's urethane enamel clears remain flexible up to a build of 20 mils or more. There is not, however, much to be gained in gloss by going past three to four coats.

Next time we'll look into the most common lifting problem, discuss a clever solution for blushing and examine some clues to where your fisheyes might be coming from. ■

BodyShop Business *is starting a question and answer forum for your painting questions. If you have something that you've always wanted to know and can't seem to find an answer for, send us the question. We can not answer questions about specific brand-name products — address those to your paint rep or jobber. Ask us the "how come" kind of questions. Using a panel of experts, we'll answer in print the best questions. Thanks for your interest!*

Classified Page

SELL YOUR USED EQUIPMENT
Spraybooths
Laser & Mechanical Measuring Systems
Frame & Unibody Repair Systems
Computer Systems & Software
WE HAVE BUYERS!
We do equipment appraisals.
EQUIPMENT REGISTER
30 N. Raymond Ave., Suite 605,
Pasadena, CA 91103
818-796-8804

Circle 95 on Reader Service Card

DISTRIBUTORS WANTED
Aggressive, successful Distributors sought by leading manufacturer to market our full line of high-demand, state-of-the-art collision repair systems and equipment.
CALL (800) 841-3220
KAR GRABBER
Grabber Mfg. Co., Inc.
Route 3, Box 13
Brunswick, GA 31523

DUZ-MOR
Used & refurbished DUZ-MOR Collision Repair Systems from $20,000.00 includes accessories and a ONE YEAR WARRANTY. 2, 3 or 4 tower models available.
MERIT LEASING CO.
Call (515) 262-4899

Circle 96 on Reader Service Card

Classified Ad Space
BodyShop Business classified advertising is available for $195 per insertions. Six or more ads per year are $175 per insertion.
Classifieds measure 2-1/8 x 1-1/2.
Ads can be purchased in double units (2-1/8 x 3") for $390 per insertion.
Advertising deadline is the first of every month.
Contact BodyShop Business Advertising Department at 216-535-6117.

THIS WAS A CAMARO!
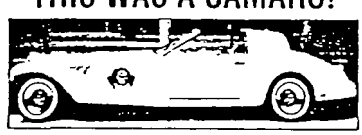
Convert any '82 to '89 Camaro or Firebird into America's premiere classic motorcar, the Phantom Classic. BIG PROFITS!! A relatively simple yet amazing conversion.
CALL NOW (305) 797-6354

Distribution Company
Distributors Earn $40,000 - $100,000 yearly with recognized items. Local Dealers, Bodyshops and Carwashes use these products. Every Day! Company helps you get established. $25K Investment handles new van, inventory and working capital.
PRODUCTION CAR CARE PRODUCTS
USA (800) 331-7364 CA (209) 943-7337

NEW IDEAS?
Pull-It Corporation, manufacturers of the internationally known Mo-Clamp line of autobody clamps and accessories, would like to help you bring your ideas to the marketplace. Several of the products we currently offer were developed from ideas brought to us by people such as yourself. With our expertise in design, manufacture, and distribution, we can help turn your ideas into money. We welcome the opportunity to work with you. Call Al Tessman, R&D Manager at (503) 644-9167, or (800) 678-5548.
mo clamp
Mo Clamp
6920 S.W. 111th Avenue • Beaverton, Oregon 97005

A. EPA PRESENTATION

Mr. Randy McDonald of the Chemicals and Petroleum Branch in the Emission Standards Division presented the status of the Batch Processes Control Techniques Guidelines (CTG). The presentation was followed by two additional related presentations: one from Mr. Rick Hamilton, of On-Demand Environmental Systems, and one from Ms. Terri Ranganath, of E. I. du Pont de Nemours & Co., Inc., representing the Chemical Manufacturers Association (CMA). These presentations are summarized below. Handouts and slides are attached. Also included is a summary of the discussion that took place between the NAPCTAC committee members and the Batch project team after the three presentations were completed.

1. Status of Batch Processes CTG

The objectives of the presentation were to present the approach taken to develop reasonably available control technology (RACT) options for controlling volatile organic compounds (VOC) emissions from batch processes; to present the options and the impacts of applying the options to batch processing VOC emissions on a nationwide basis; and to highlight implementation issues that still need to be addressed. The discussion started out with a characterization of batch processes--namely, that they are non steady-state processes. As an example, the emission events from a batch reactor--such as vessel charging, reactor heatup, occasional purging of the reactor vapor space, and product discharge--were described and the characteristics of the resulting emission stream were said to be continuously changing. Mr. McDonald pointed out that the scope of the CTG is limited to five industries, and the CTG contains RACT options for controlling process vents and equipment leaks. Wastewater and storage emissions are addressed in separate CTG's. Equipment leak requirements were adopted from the requirements set forth for emissions from batch processes in the equipment leaks negotiated regulation. Mr. McDonald explained that process vents were, therefore, the focus for the majority of work done to develop this CTG. The focus of the presentation then turned towards explaining the approach taken to develop the options. It is summarized below.

Four model processes were developed from industry data. They included typical batch unit operations and associated equipment such as reactors, crystallizers, centrifuges, dryers, and distillation units. In calculating emissions and estimating the emission stream characteristics of flowrate, duration, and

VOC concentration, the assumption was made that primary condensers servicing this equipment were operated at 20°C. Also, all pieces of equipment were assumed to be vented.

Next, Mr. McDonald discussed the time-dependent variation that can occur in flowrate and VOC concentration, and subsequently in the resulting emissions. This concept was presented using slides that plotted concentration, flowrate, and emission rate on the *y* axis and duration of the batch cycle on the *x* axis. Control device selection must account for such variation and control VOC emissions that are most reasonable to control. Two types of control devices were used to examine the limits of reasonable control for VOC emissions from batch processes. They are thermal incineration and refrigeration. These devices were used exclusively because they can handle a universe of compounds. Refrigeration was used for rich VOC streams (>10,000 parts per million by volume [ppmv]), and thermal incineration for streams with lower VOC concentrations. Costing of the devices was done in accordance with the OAQPS Control Cost Manual. An illustration of the dependency of control device cost effectiveness with the amount of onstream emission duration was shown by plotting cost effectiveness versus flow rate for a number of 10,000 ppmv streams having varying onstream percentages. This discussion led to the heart of the approach for developing RACT options, which is outlined below.

A "mass flux" curve was shown and discussed in detail by Mr. McDonald. The mass flux curve is a plot of control device cost effectiveness (dollars per Megagram [$/Mg]) versus maximum instantaneous flowrate (standard cubic feet per minute [scfm]) for a set annual emission rate (termed "mass flux") for a range of concentrations varying from 100 ppmv to 100,000 ppmv. The curves form an envelope that describes the range of cost effectiveness values that are possible using the two control devices specified above for any flowrate. The left-hand endpoints of the mass flux curve represent continuous emission streams. They are the lowest maximum instantaneous flowrates that a vent stream can have for a set concentration to emit the specified mass flux, which, for the first curve, was 20,000 lb/yr. As the curves move from left to right, the duration of the emission streams becomes shorter and shorter so that the right hand endpoints of the curve approximate very short "bursts" containing high flowrates.

A control device sized to handle emissions streams described by the right-hand endpoints would be less cost effective (i.e., more expensive) than one sized to handle a stream described by left-hand endpoints because the device would be large enough to handle the burst but would not operate as long for the same mass flux value (i.e., the Mg in $/Mg would remain the same, but the $ would be higher). By drawing a horizontal line at a desired cost effectiveness, intersecting the envelope formed by the mass flux curves, and drawing a vertical tie-line down, the limit of

maximum instantaneous flowrate for a given cost effectiveness can be set. The RACT options were developed based on this analysis and take the form of a regression line linking mass flux (or annual emission rate) and maximum instantaneous flowrate at certain cost effectiveness values. A process vent would therefore require control to a desired level (the current options are 90, 95, and 98 percent reduction) if the maximum flowrate were less than the value obtained from the equation of the regression line for a specified annual emission rate. This is the approach that was taken to evaluate the limits of RACT for process vents.

For equipment leaks, Mr. McDonald reiterated that the RACT option followed the requirements contained in the section specific to batch processing contained in the equipment leaks negotiated regulation.

Mr. McDonald then presented the RACT options and their associated nationwide impacts. To estimate these impacts, model plants were developed from the model processes presented earlier. The number of facilities represented by these model plants located in nonattainment areas having batch VOC emissions from the industries in the scope of the CTG were estimated using data from the Census of Manufacturers. Selected RACT options were shown on a table with their estimated national emissions reduction and costs.

Finally, Mr. McDonald presented a slide of some of the implementation issues that have arisen since the approach was developed. The first of these issues is how to obtain the annual emission rate for a process vent or group of process vents. Current thinking is that source testing is not technically and economically feasible. The Batch CTG document contains methodologies for estimating VOC emissions from batch processing steps. These methodologies could be used to develop the annual emissions estimate. Maximum instantaneous flowrate is presumably an easier parameter to obtain for various reasons.

The second implementation issue discussed is how to verify the annual emission rate. Because of the format of the RACT options, facilities will be required to anticipate the annual emission rate from a process vent or group of process vents to determine whether the vent must be controlled. For industries that have continuously changing production schemes, this task could become very complicated. The agency responsible for enforcing RACT might require an end-of-the-year audit to ensure that process vents or groups of process vents were controlled as required. Finally, testing or monitoring of control device operating parameters might be required to ensure that the required control efficiencies (i.e., 90, 95, and 98 percent) were being achieved.

CONTROL TECHNIQUES GUIDELINES DOCUMENT (CTG)

for

VOC EMISSIONS from BATCH PROCESSES

NAPCTAC Meeting

November 21, 1991

1118

Batch Processes are discontinuous processes in which mass, temperature, concentration and other properties of a system vary with time.

Batch Processes are typically characterized as "non-steady state"

INDUSTRIES COVERED

Polymers and resins

Pharmaceuticals

Paints and allied products

Synthetic organic chemicals (SOCMI)

Agricultural chemicals

APPLICABILITY OF BATCH CTG

- Process vents
- Equipment leaks

Covered by this CTG

- Storage tanks
- Wastewater

Covered by other CTGs

PROCESS VENTS

MODEL PROCESSES

OBJECTIVE: To characterize the majority of batch processes

SOLUTION: 4 model processes

1. Solvent reaction with atmospheric dryer
2. Solvent reaction with vacuum dryer
3. Liquid reaction
4. Formulation

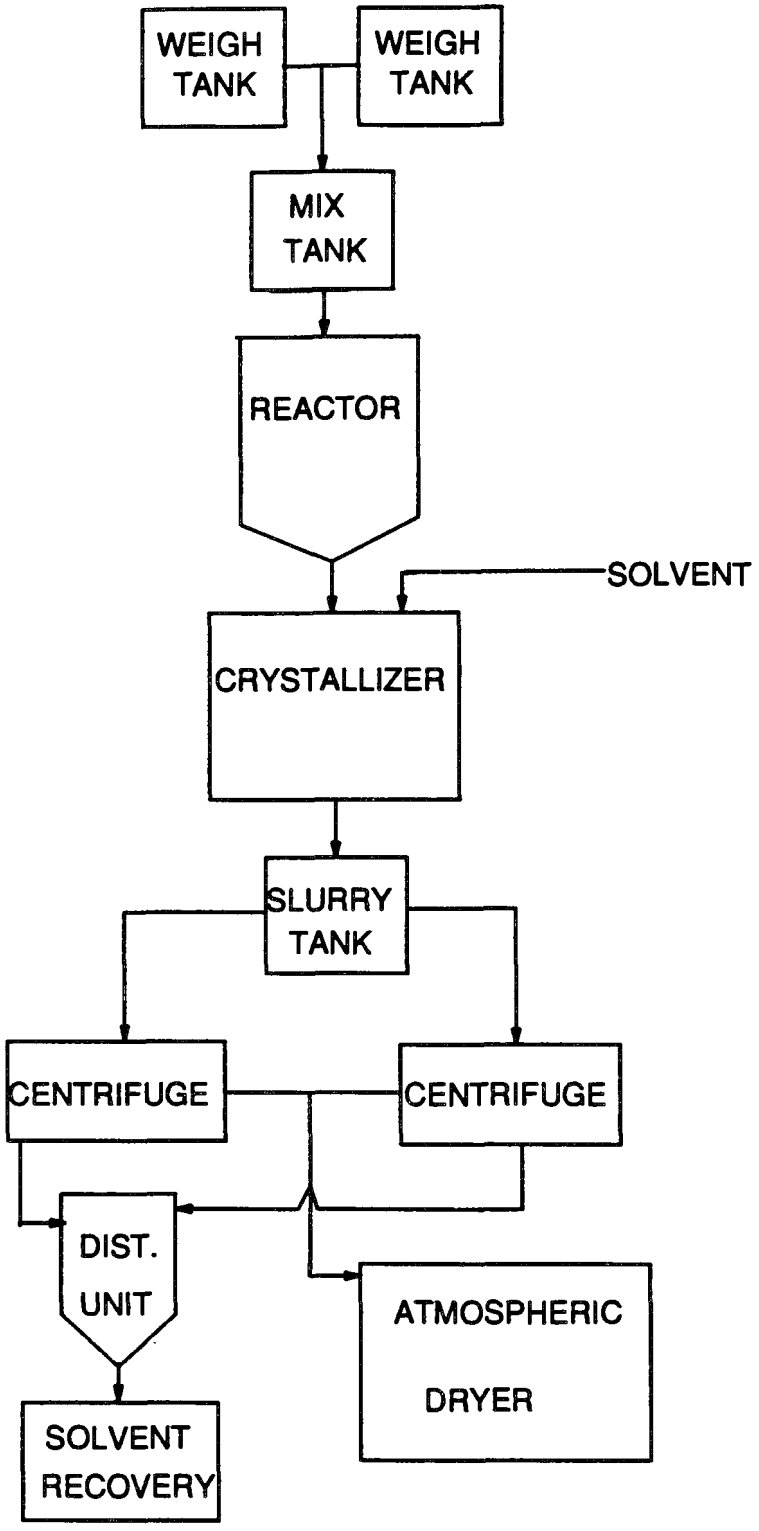

Model batch process for solvent reaction w/ atmospheric dryer

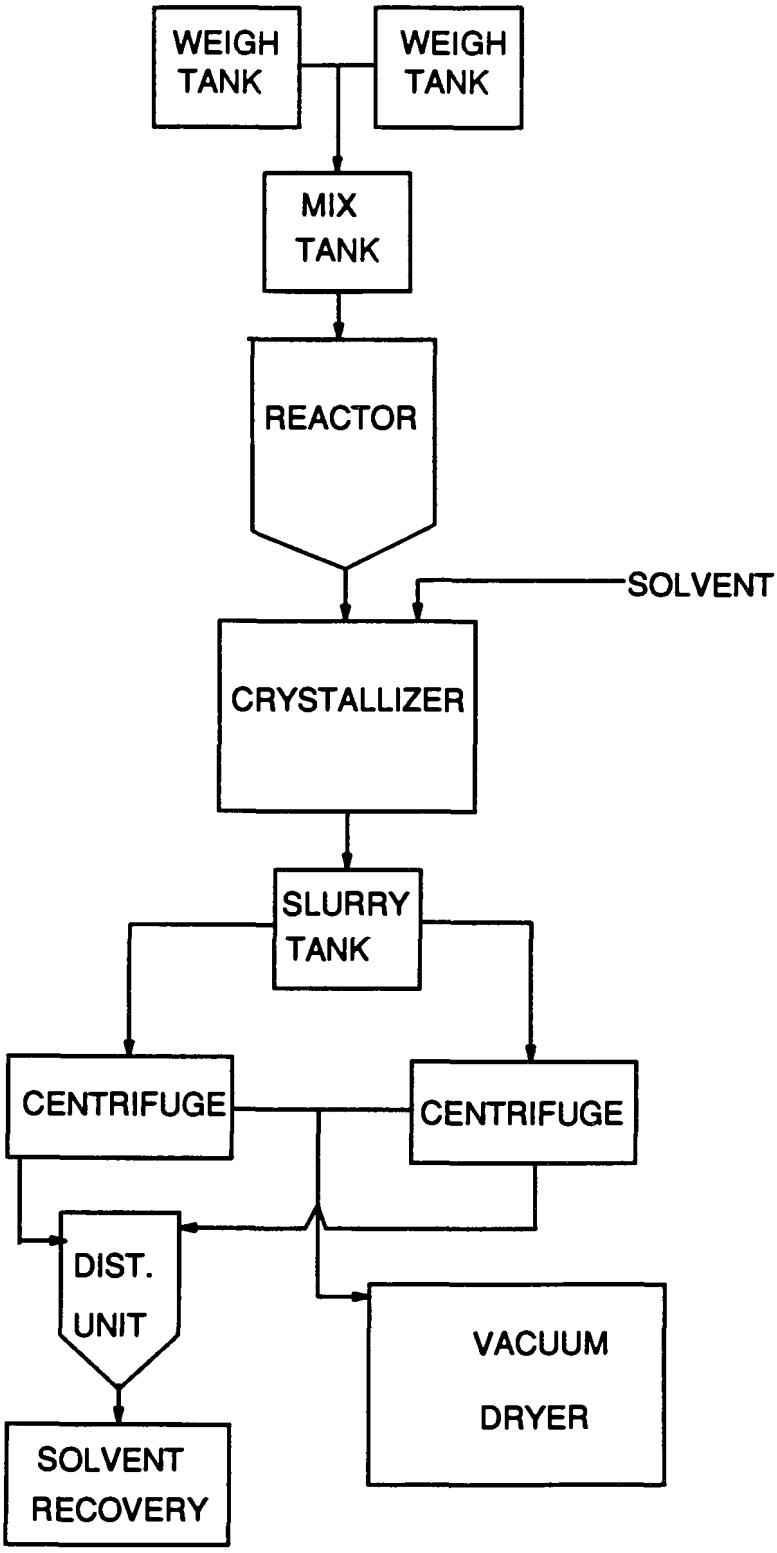

Model batch process for solvent reaction w/ vacuum dryer

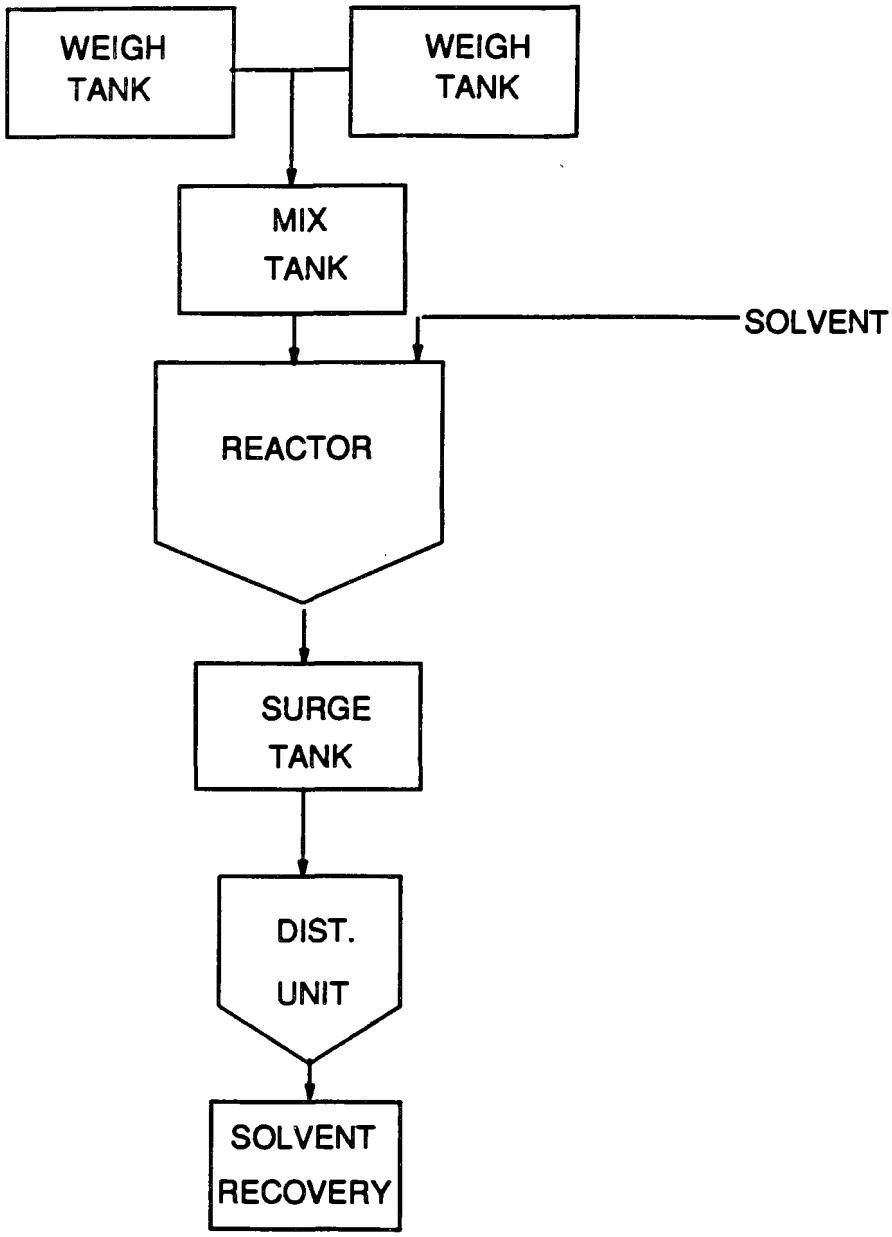

Model batch process for liquid reaction

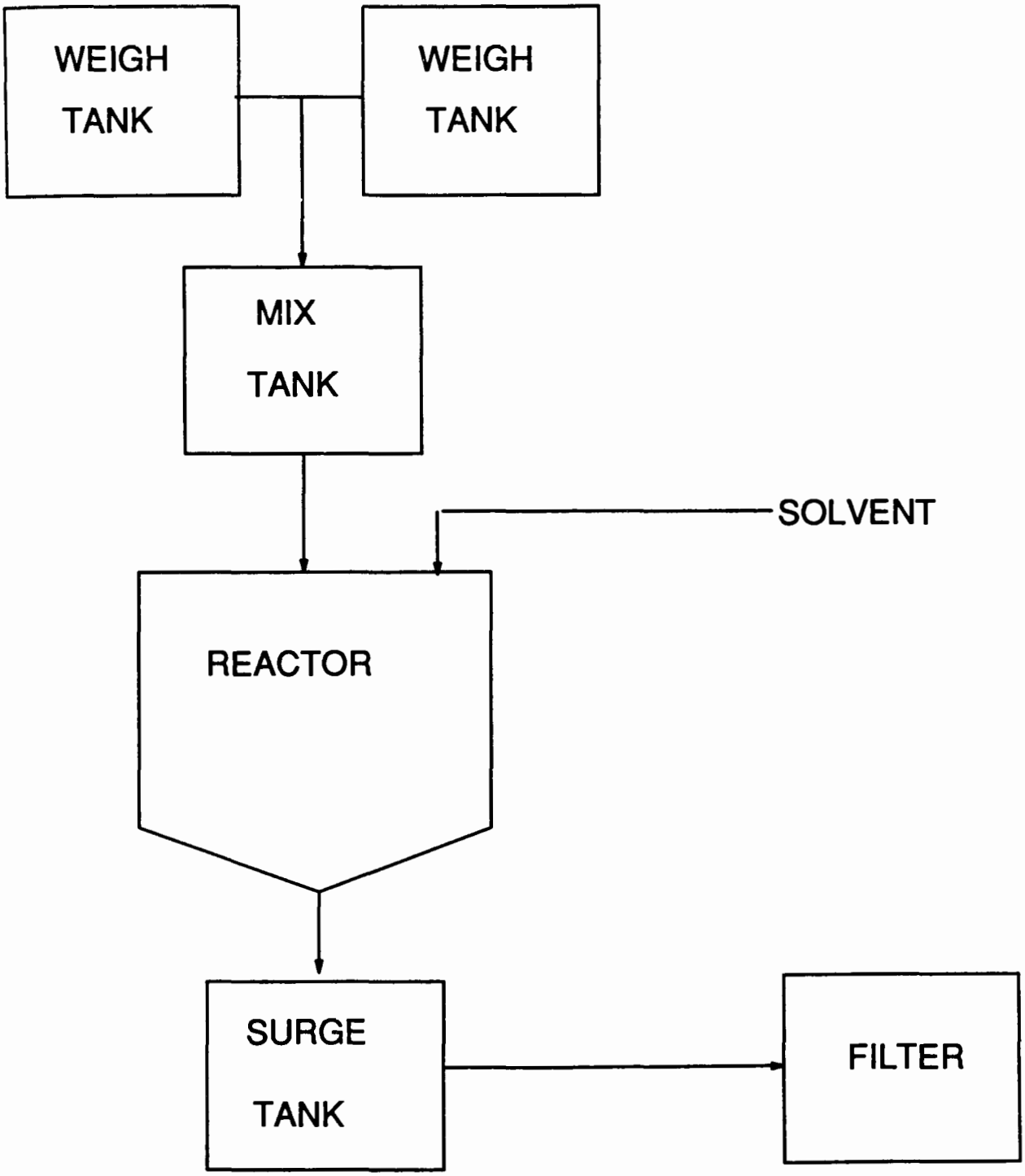

Model batch process for formulation

CONCENTRATION, FLOWRATE, and DURATION

determine

EMISSIONS

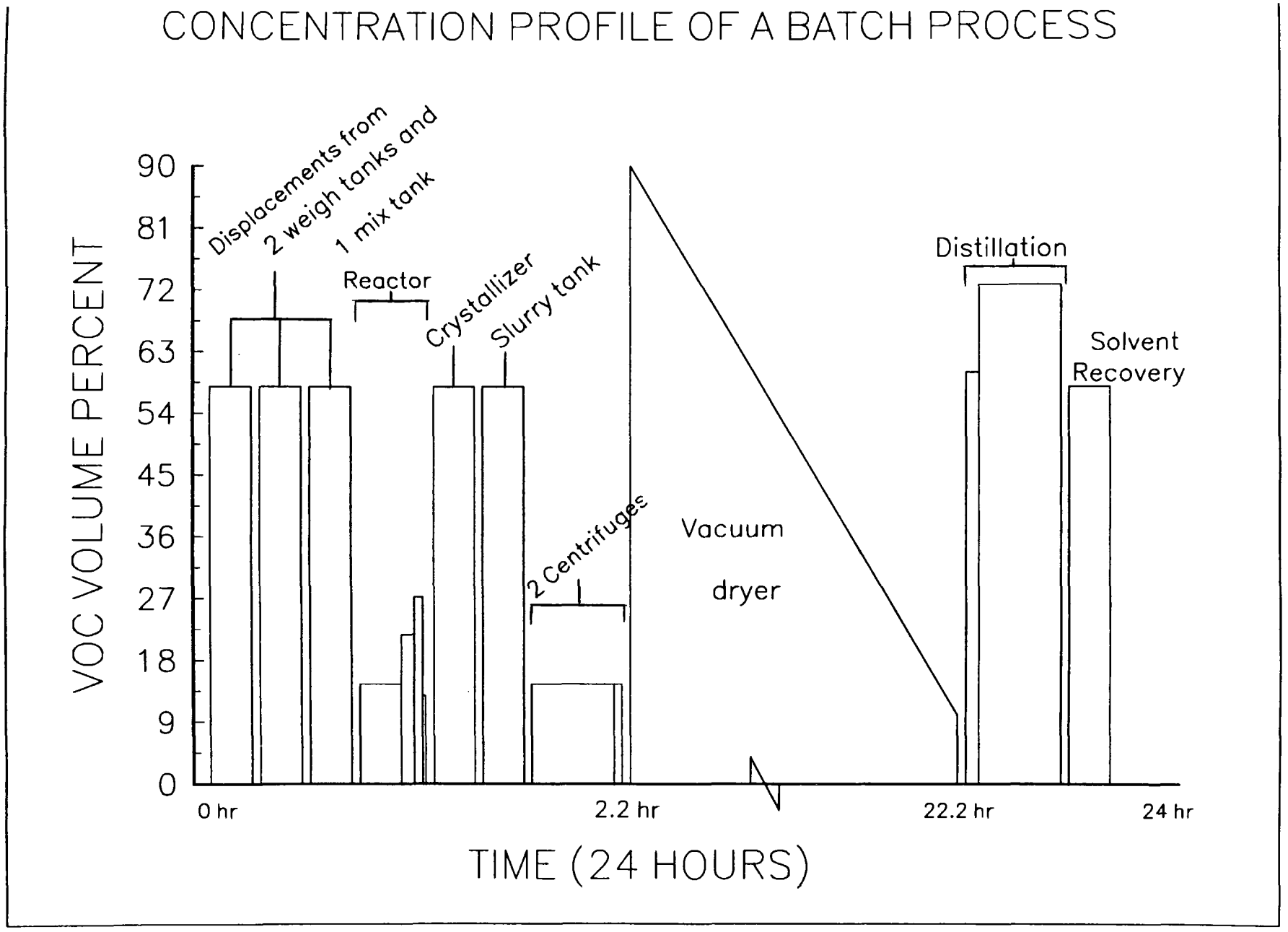
CONCENTRATION PROFILE OF A BATCH PROCESS
VOC VOLUME PERCENT
90
81
72
63
54
45
36
27
18
9
0
Displacements from
2 weigh tanks and
1 mix tank
Reactor
Crystallizer
Slurry tank
2 Centrifuges
Vacuum
dryer
Distillation
Solvent
Recovery
0 hr
2.2 hr
22.2 hr
24 hr
TIME (24 HOURS)

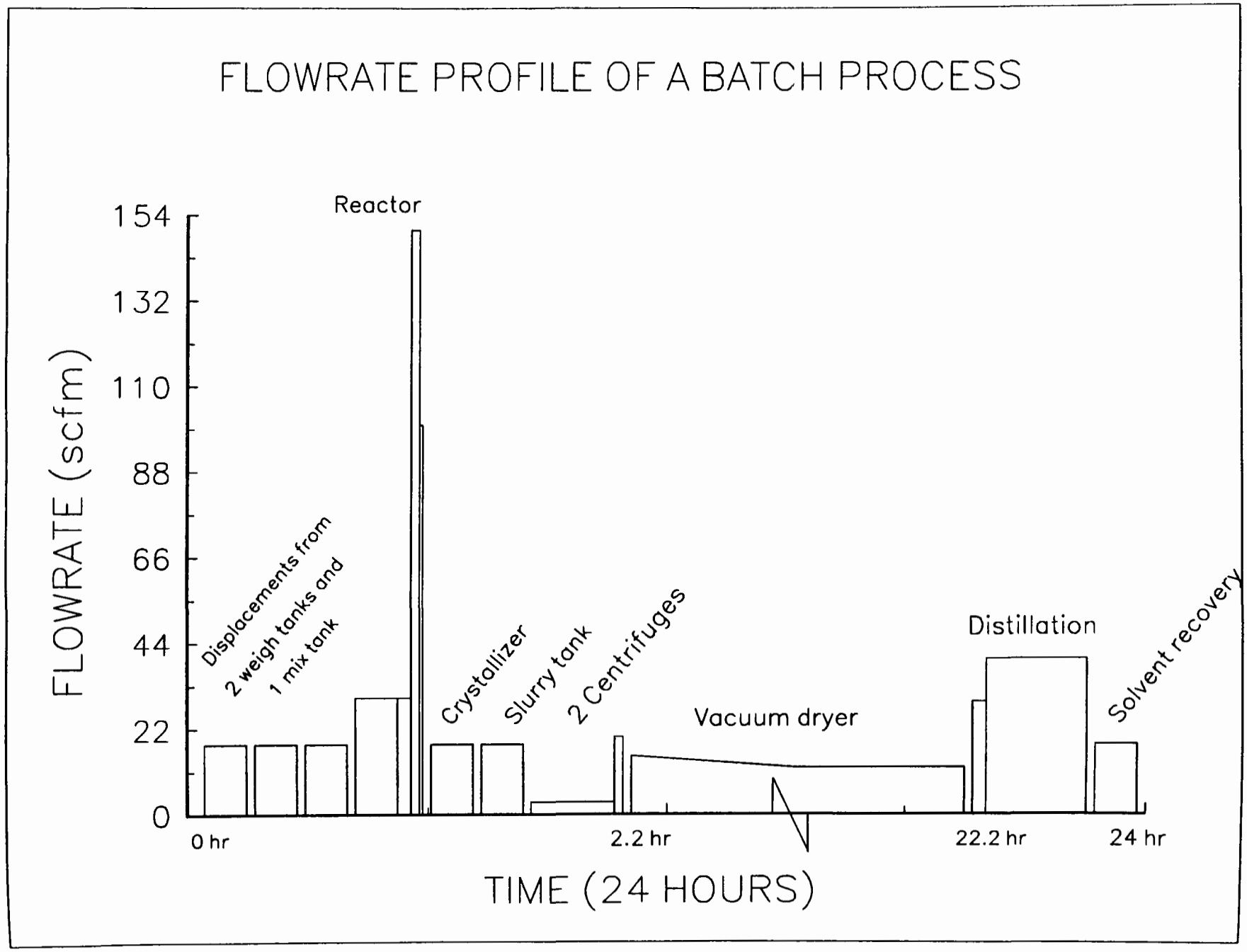
FLOWRATE PROFILE OF A BATCH PROCESS
FLOWRATE (scfm)
154
132
110
88
66
44
22
0
Reactor
Displacements from
2 weigh tanks and
1 mix tank
Crystallizer
Slurry tank
2 Centrifuges
Vacuum dryer
Distillation
Solvent recovery
0 hr
2.2 hr
22.2 hr
24 hr
TIME (24 HOURS)

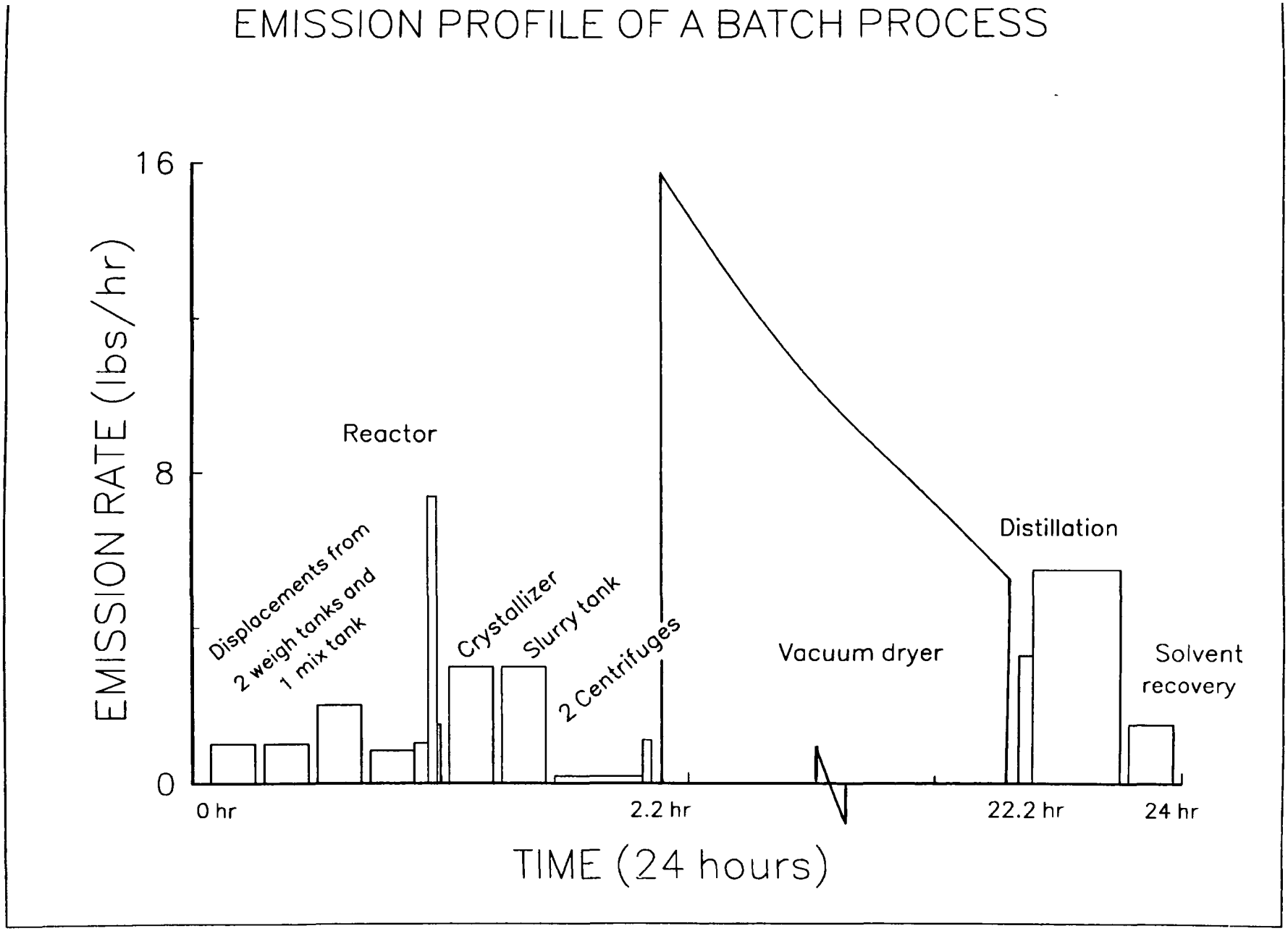
EMISSION PROFILE OF A BATCH PROCESS
EMISSION RATE (lbs/hr)
16
8
0
Displacements from
2 weigh tanks and
1 mix tank
Reactor
Crystallizer
Slurry tank
2 Centrifuges
Vacuum dryer
Distillation
Solvent
recovery
0 hr
2.2 hr
22.2 hr
24 hr
TIME (24 hours)

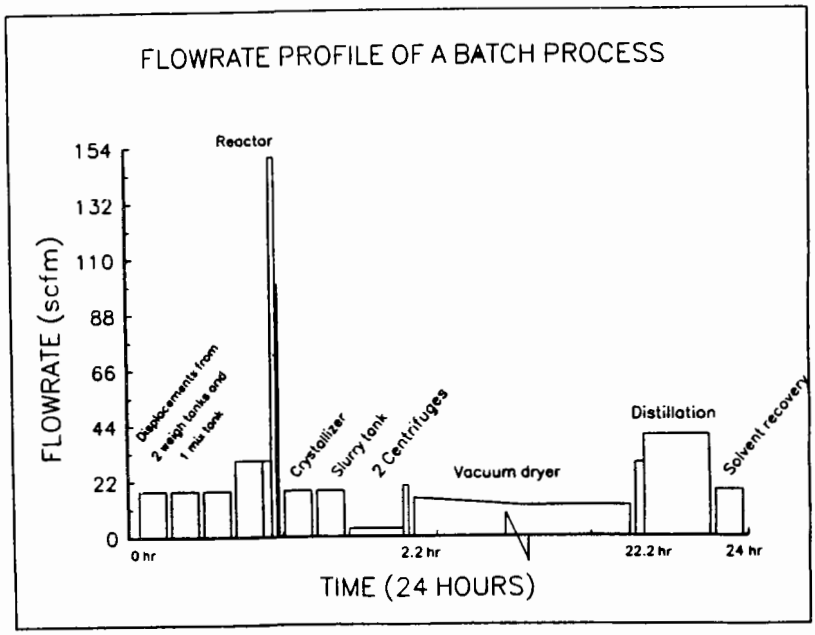
FLOWRATE PROFILE OF A BATCH PROCESS
FLOWRATE (scfm)
154
132
110
88
66
44
22
0
Reactor
Displacements from 2 weigh tanks and 1 mix tank
Crystallizer
Slurry tank
2 Centrifuges
Vacuum dryer
Distillation
Solvent recovery
0 hr
2.2 hr
22.2 hr
24 hr
TIME (24 HOURS)

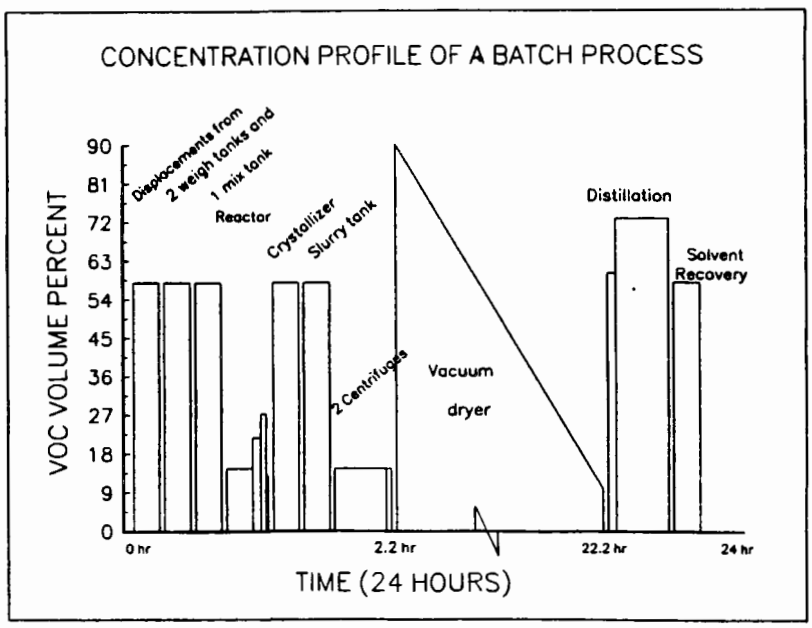
CONCENTRATION PROFILE OF A BATCH PROCESS
VOC VOLUME PERCENT
90
81
72
63
54
45
36
27
18
9
0
Displacements from 2 weigh tanks and 1 mix tank
Reactor
Crystallizer
Slurry tank
2 Centrifuges
Vacuum dryer
Distillation
Solvent Recovery
0 hr
2.2 hr
22.2 hr
24 hr
TIME (24 HOURS)

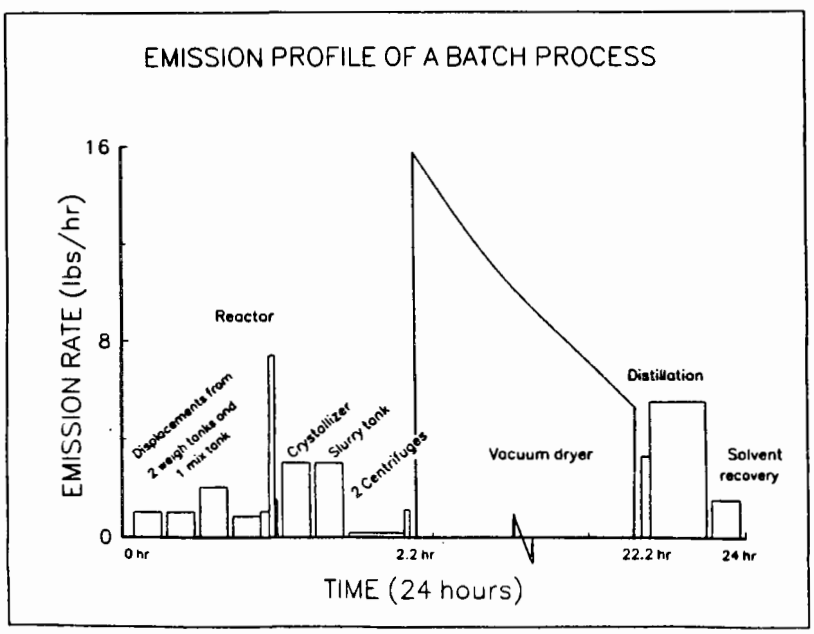
EMISSION PROFILE OF A BATCH PROCESS
EMISSION RATE (lbs/hr)
16
8
0
Reactor
Displacements from 2 weigh tanks and 1 mix tank
Crystallizer
Slurry tank
2 Centrifuges
Vacuum dryer
Distillation
Solvent recovery
0 hr
2.2 hr
22.2 hr
24 hr
TIME (24 hours)

CONTROL TECHNOLOGY

- Thermal incineration

  (<10,000 ppmv)

- Condensation/refrigeration

  (>=10,000 ppmv)

* Other devices were examined (i.e. scrubbers and carbon adsorption),but these two are UNIVERSAL

RACT OPTIONS STRUCTURED TO CONSIDER VARIATIONS IN:

- Concentration
- Flowrate
- Duration

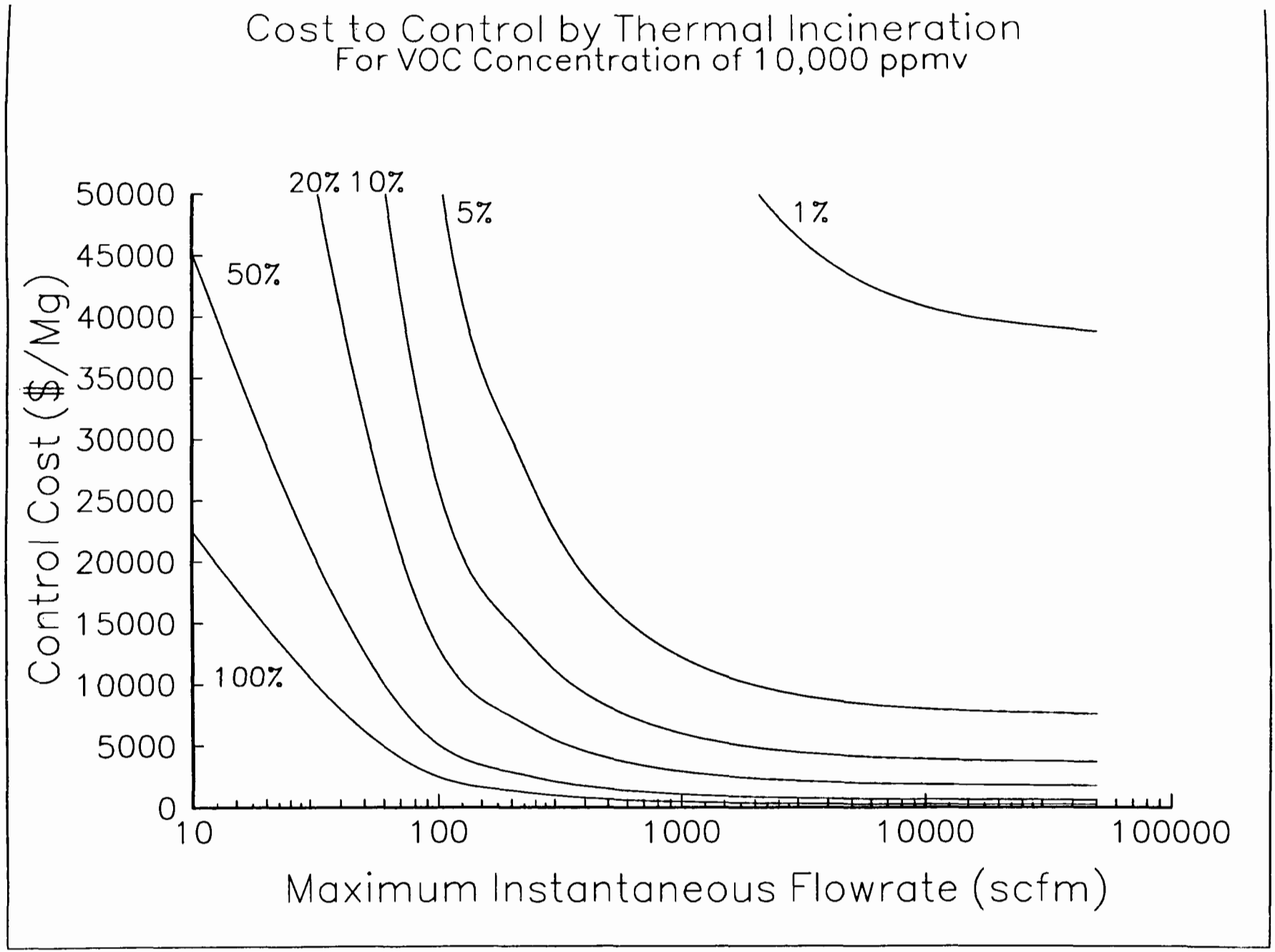
Cost to Control by Thermal Incineration
For VOC Concentration of 10,000 ppmv
Control Cost ($/Mg)
50000
45000
40000
35000
30000
25000
20000
15000
10000
5000
0
10
100
1000
10000
100000
Maximum Instantaneous Flowrate (scfm)
20%
10%
5%
1%
50%
100%

FORMAT OF OPTIONS

- Linear equations which specify flowrate "cutoffs" when annual emission rate is input

- Emission streams must be controlled to a certain level (i.e. 98%, 95%, 90%) if the maximum flowrate of the emission stream is less than the specified cutoff

APPROACH FOR DEVELOPING RACT OPTIONS

- Absorb duration into "mass flux" parameter, which is the yearly VOC emission rate
- Construct "mass flux" curves on axes of cost effectiveness and flowrate for range of concentration

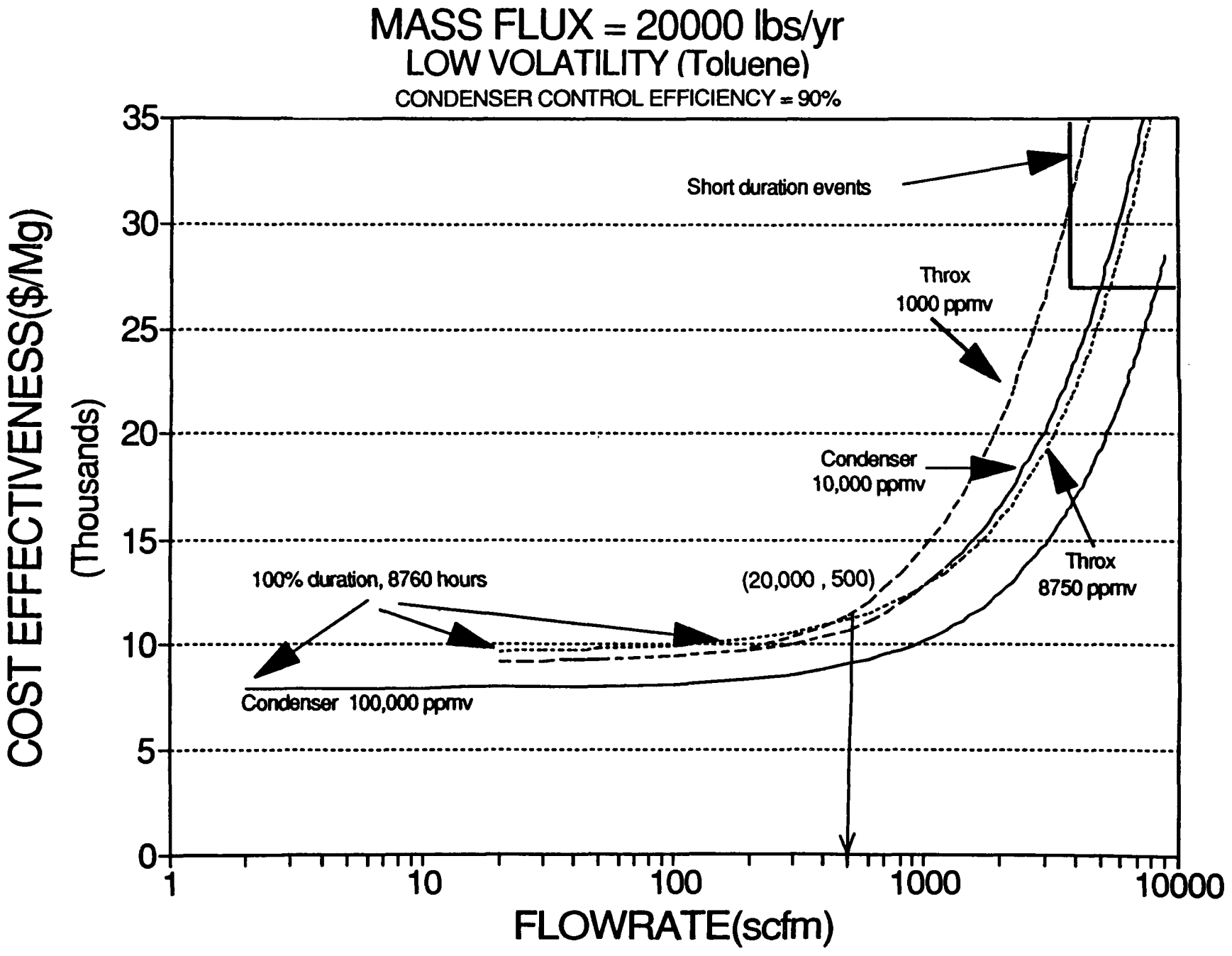
MASS FLUX = 20000 lbs/yr
LOW VOLATILITY (Toluene)
CONDENSER CONTROL EFFICIENCY = 90%
COST EFFECTIVENESS($/Mg)
(Thousands)
35
30
25
20
15
10
5
0
1
10
100
1000
10000
FLOWRATE(scfm)
Short duration events
Throx
1000 ppmv
Condenser
10,000 ppmv
Throx
8750 ppmv
100% duration, 8760 hours
(20,000 , 500)
Condenser 100,000 ppmv

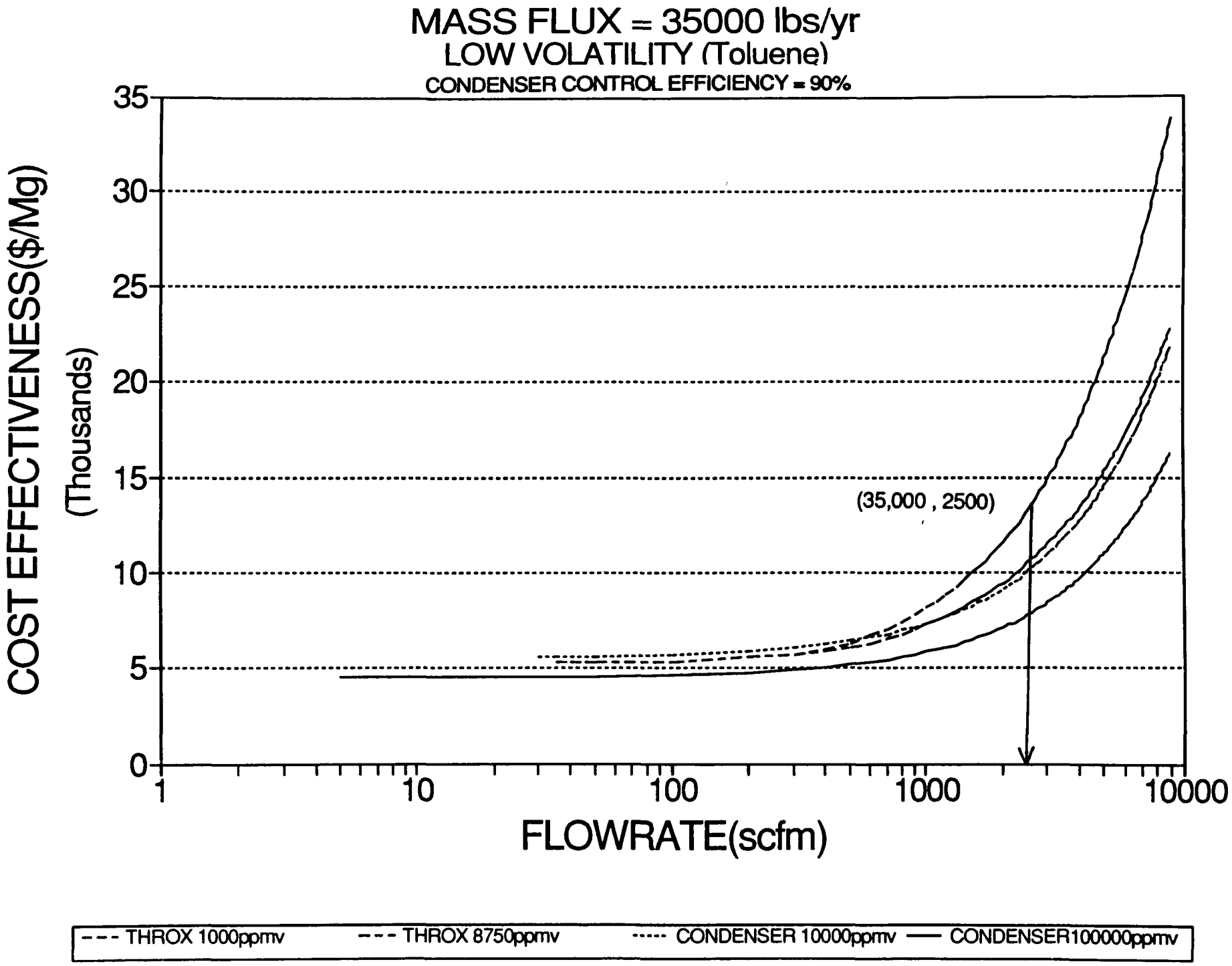
MASS FLUX = 35000 lbs/yr
LOW VOLATILITY (Toluene)
CONDENSER CONTROL EFFICIENCY = 90%
COST EFFECTIVENESS($/Mg)
(Thousands)
35
30
25
20
15
10
5
0
1
10
100
1000
10000
FLOWRATE(scfm)
(35,000 , 2500)
THROX 1000ppmv
THROX 8750ppmv
CONDENSER 10000ppmv
CONDENSER100000ppmv

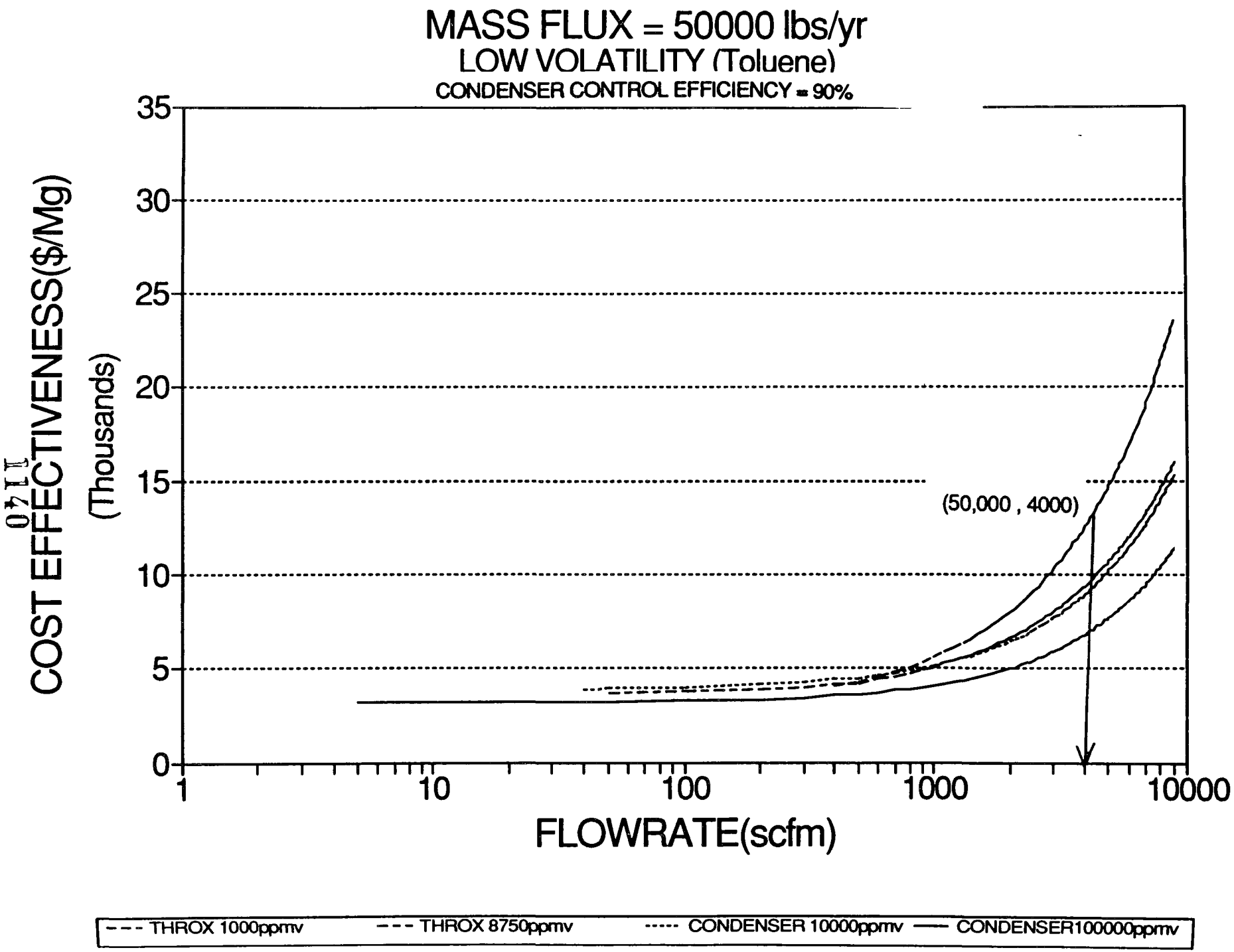
MASS FLUX = 50000 lbs/yr
LOW VOLATILITY (Toluene)
CONDENSER CONTROL EFFICIENCY = 90%
COST EFFECTIVENESS($/Mg)
(Thousands)
35
30
25
20
15
10
5
0
1
10
100
1000
10000
FLOWRATE(scfm)
(50,000 , 4000)
THROX 1000ppmv
THROX 8750ppmv
CONDENSER 10000ppmv
CONDENSER100000ppmv

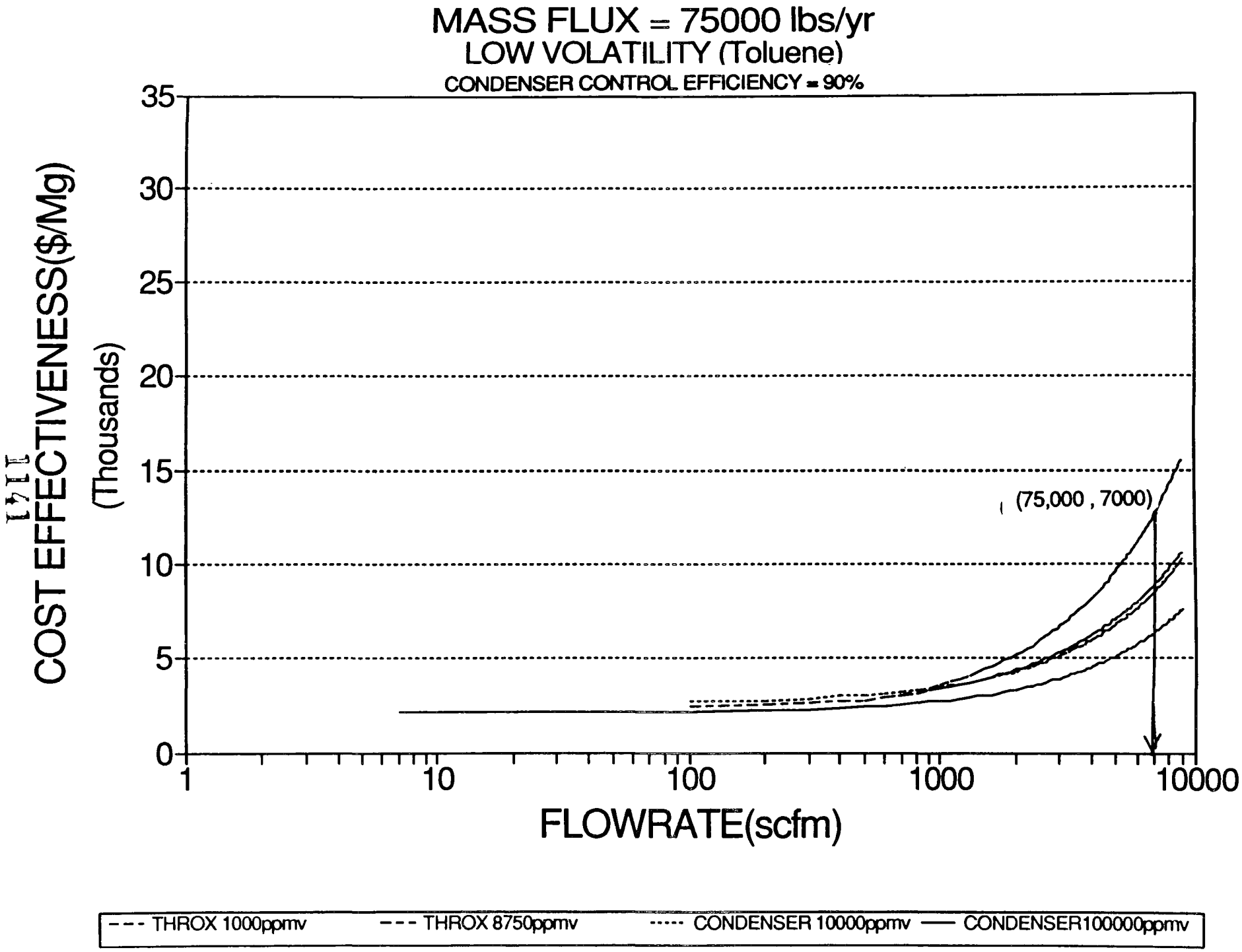
MASS FLUX = 75000 lbs/yr
LOW VOLATILITY (Toluene)
CONDENSER CONTROL EFFICIENCY = 90%
COST EFFECTIVENESS($/Mg)
(Thousands)
35
30
25
20
15
10
5
0
1
10
100
1000
10000
FLOWRATE(scfm)
(75,000 , 7000)
THROX 1000ppmv
THROX 8750ppmv
CONDENSER 10000ppmv
CONDENSER100000ppmv

DATA POINTS

X	Y	
Mass Flux (lb/yr)	Flowrate (scfm)	Cost-effectiveness ($/Mg)
20,000	500	10,000
35,000	2500	10,000
50,000	4000	10,000
75,000	7000	10,000

Flowrate = 0.1167(Mass Flux) - 1750

EQUIPMENT LEAKS

- Adopted equipment leaks negotiated regulation as described in the Hazardous Organic NESHAP (HON)

Portions specific to Batch Processing consider

- Exemption from control of sources in service less than 300 hr/yr

- Control via pressure testing or leak detection and repair (LDAR)

NATIONWIDE IMPACTS

Extrapolated from model processes to model plants to nationwide totals

Uses census of manufacturers data to estimate facilities located in non-attainment areas for small, medium, and large groupings

Small plant	1-19 employees, 3 model processes
Medium plant	20-99 employees, 10 model processes
Large plant	>=100 employees, 30 model processes

BATCH PROCESSES CTG RACT OPTIONS

OPTION	DESCRIPTION OF OPTION	NATIONWIDE EMISSION REDUCTION (Mg/yr)	NATIONAL COST ($)	AVERAGE COST EFFECTIVENESS ($/Mg)
1	Controlling equipment leaks	6,900	$13,000,000	$1,900
2	90% control of aggregated process vents that are not exempt per cutoffs based on the $5K envelope	53,400	$94,500,000	$1,800
3	90% control of individual process vents that are not exempt per cutoffs based on the $5K envelope	39,400	$95,000,000	$2,400
4	98% control of individual process vents that are not exempt per cutoffs based on the $5K envelope	41,000	$363,000,000	$9,000

- Options 2-4 include controlling equipment leaks to the level found in Option 1
- Options 2-4 do not include controlling the paints and allied products industry

IMPLEMENTATION ISSUES

- Estimating and/or testing to obtain annual VOC emission rate (Mass Flux, lb/yr) and maximum instantaneous flowrate (scfm)

- Recordkeeping of process equipment usage, coupled with end-of-the-year audit

- Recordkeeping of control device operating parameters to ensure compliance with control requirements

B. INDUSTRY PRESENTATIONS

Batch Processes Control Techniques Guidelines

Richard E. Hamilton
Vice President
On-Demand Environmental Systems, Inc.
505 Asbury Street
San Jose, CA 95110

VOC REMOVAL

Thermal processors offer significant benefits for VOC abatement control for a variety of industries. If a centrally located thermal processing unit is used for VOC removal, then all point sources that emit VOCs may be ducted together and run to the processor. For a broad range of applications it's understood that not all of the facility's emission point sources will be emitting VOCs continuously or at the same time. For example, Figure 1 shows an emission cycle of VOCs coming from a semiconductor manufacturing process. Even though the air flow is continuous, VOCs in the exhaust stream occur only when chemicals are being used in the processing steps. For this application, VOCs are in exhaust stream an average of 18 percent of the time during the two shift per day operation and range from 30 to 10 percent. Evaluated over a 24 hour period, the emissions average less than 10 percent of the total day.

If there are continuous VOC emissions, central processors may be attractive from the stand point of operating cost. Figure 2 represents a centrally installed thermal processor for a semiconductor manufacturing operation which as we have studied does not have continuous VOC emissions. Using several smaller thermal processors within each local manufacturing area may be a more practical approach because each can operate more efficiently under specific conditions and may be inactive when not needed. Figure 3 shows the same point sources benefitting from locally installed thermal processors that can respond to the emission cycle from the processing equipment.

Effluent from individual pieces of processing equipment, or small groups of equipment, may be directed to small VOC processors. If a fuel-on-demand type processor is controlled by a VOC sensor and a microcomputer, it will activate only when needed and consume fuel only when the attached processing equipment is contributing VOCs to the air stream. This will also lower the cost of VOC destruction since fuel consumption of thermal processors depends on the volume of air that passes through them.

FUEL-ON-DEMAND THERMAL PROCESSING SYSTEMS

Microprocessor equipped, fuel-on-demand, thermal processing systems may be activated to correspond to VOC emission requirements. An activation signal can be generated by an electric signal indicating that there are chemicals in the exhaust or by sensors located in equipment exhaust ducts. For example both a heated surface

semiconductor device and a gas chromatograph on a silicon wafer have been used to detect total hydrocarbon levels or individual solvents in the exhaust. Different combinations of sensors can be used to keep the thermal processors active until VOC levels in the air stream decay to an acceptable level.

A fuel-on-demand thermal processor must achieve high destruction efficiency immediately upon activation. Some advantages of reduced fuel consumption are lost if appreciable stabilization time is required. Small thermal processors can inject fuel into the stream containing VOCs. When the mixture reaches its lower flammability limit, it can be ignited. Proper injection and uniform mixing with the air stream prior to ignition will prevent channeling of the VOCs through the flame area. This is important because, in instances where such channels actually form, VOCs may pass through a reactor without coming into contact with the flame. Direct flame contact is necessary since it enables high destruction efficiencies with short residence time. Figure 4 is a cross section of the reactor used in the On-Demand Environmental System's thermal processor which is designed to ensure direct flame contact with the VOCs in the air stream.

In addition to VOC destruction efficiency, NOx generation is also an important consideration. Consequently, a responsive thermal processor that operates only when required will reduce the overall amount of NOx produced, compared to systems that maintain a high temperature on a continuous basis. For fuel-on-demand thermal processors, it has been demonstrated that reactor design affects the levels of NOx produced during the operation. Levels below 10ppm of NOx during operation have been measured from the On-Demand technology shown in Figure 4.

COMPUTER CONTROL

A personal computer with interface hardware can cost-effectively operate the thermal processor if the processors are equipped with variable fuel flow hardware. Computer software can incorporate selected algorithms to optimize specific applications. As the VOC concentrations change, the computer adjusts the flow of fuel to maintain specific operating conditions. In addition to the basic features provided by computer-controlled systems, data and alarm conditions can be electronically logged, thereby providing files useful for demonstrating regulatory compliance.

INSTALLATION COSTS

Using direct flame contact that provides efficient energy transfer, the thermal processors can be made small and compact. Therefore, this technology provides installation flexibility at the point of generation of the VOC exhaust. Long and costly ducting runs to central abatement devices can, therefore, be avoided. The units can be installed in a variety of configurations and can be located outdoors.

Duty Cycle
Two Shift Day (16 Hr.)

Figure 1

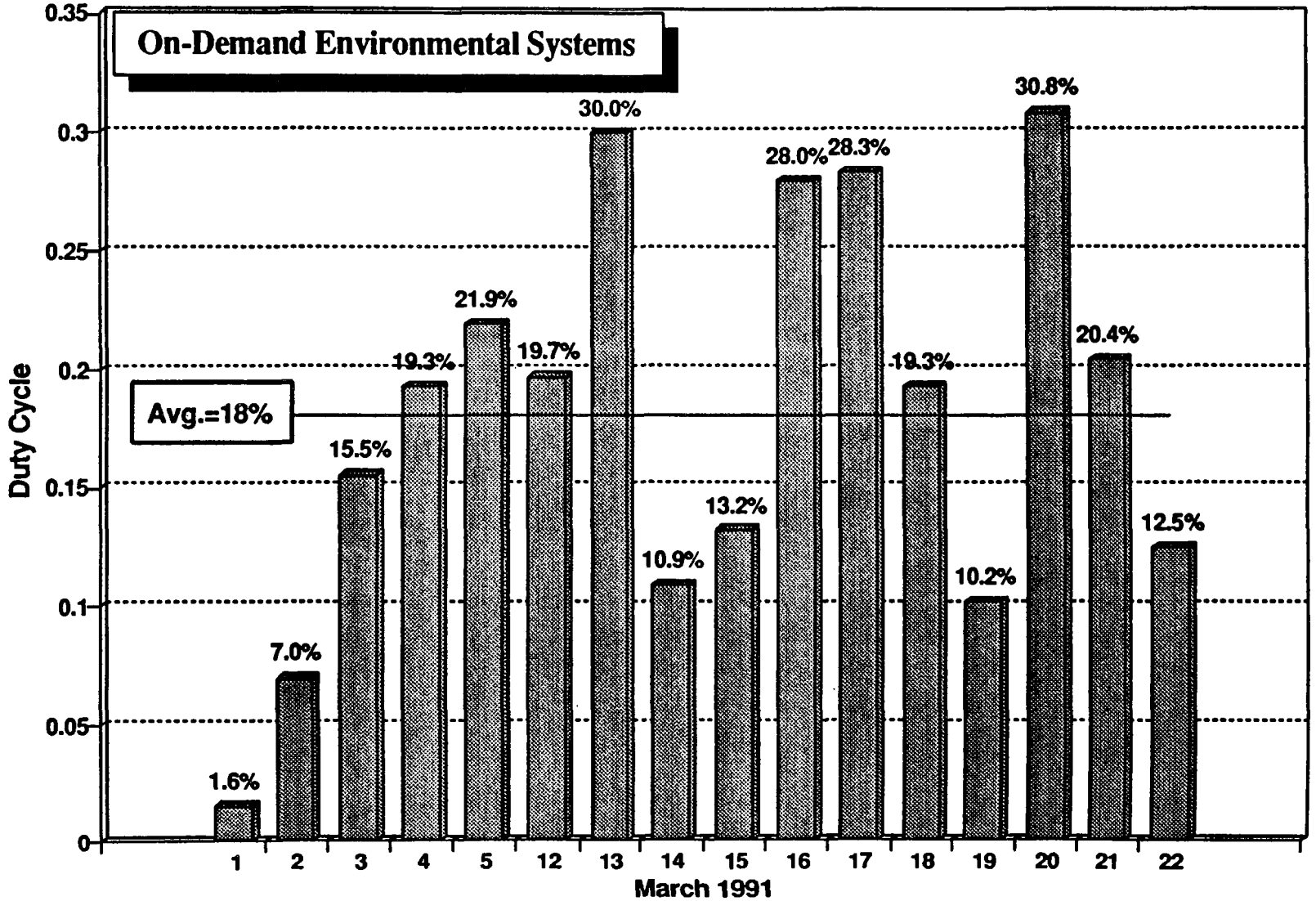

Centrally Installed Abatement

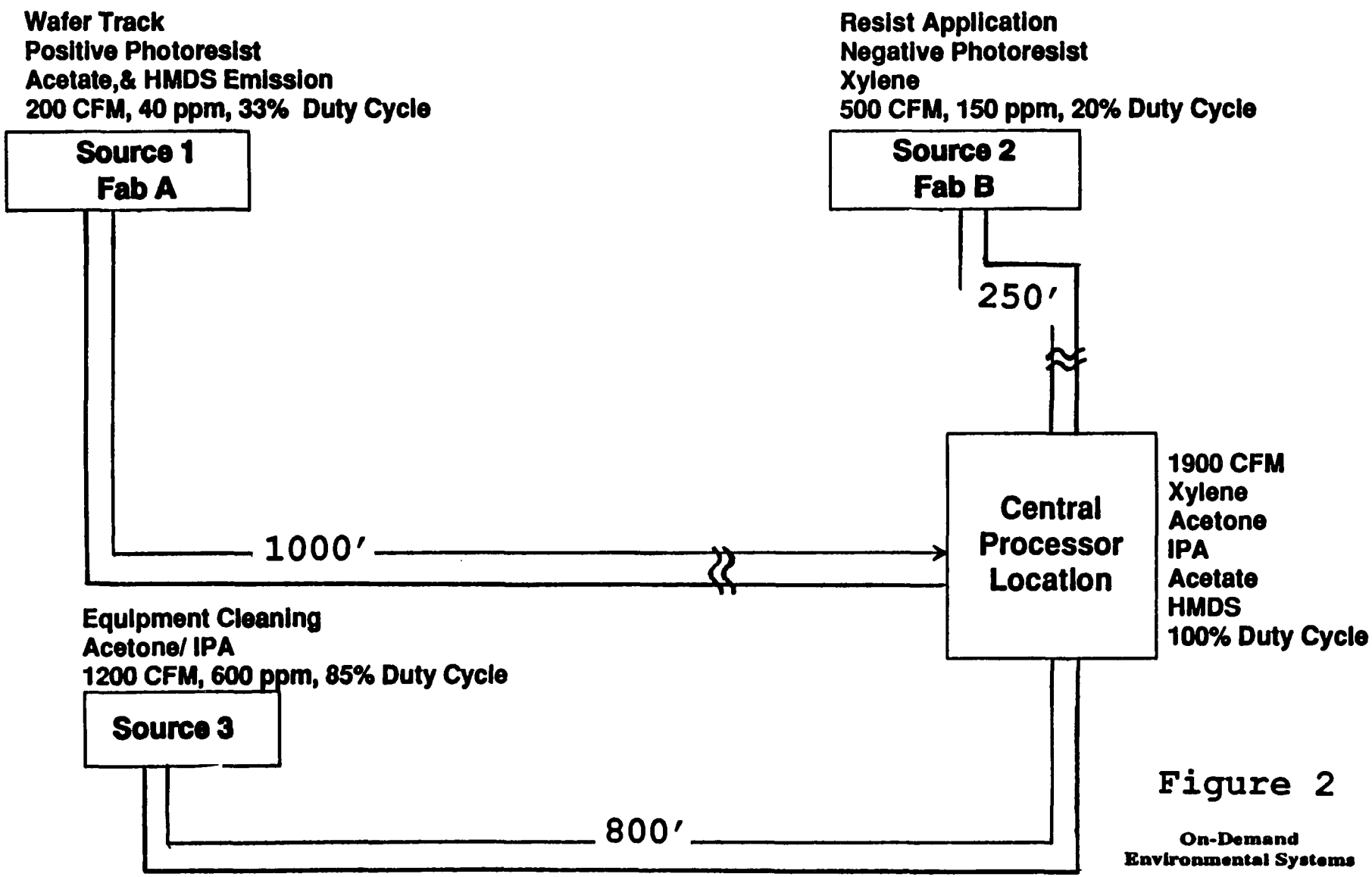

Figure 2

On-Demand
Environmental Systems

Point Source Emission Control

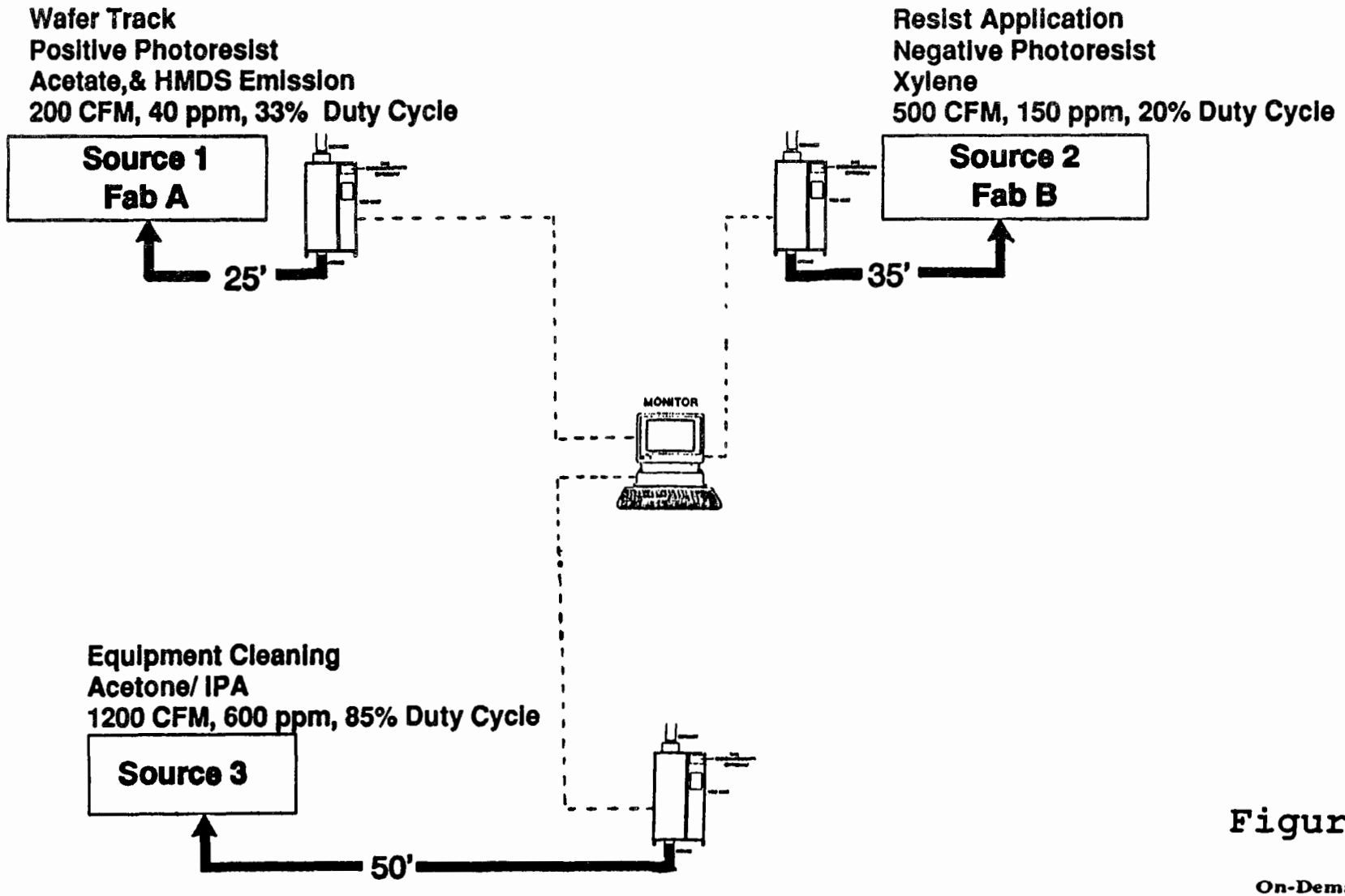

Figure 3

On-Demand
Environmental Systems

VOC Thermal Processor

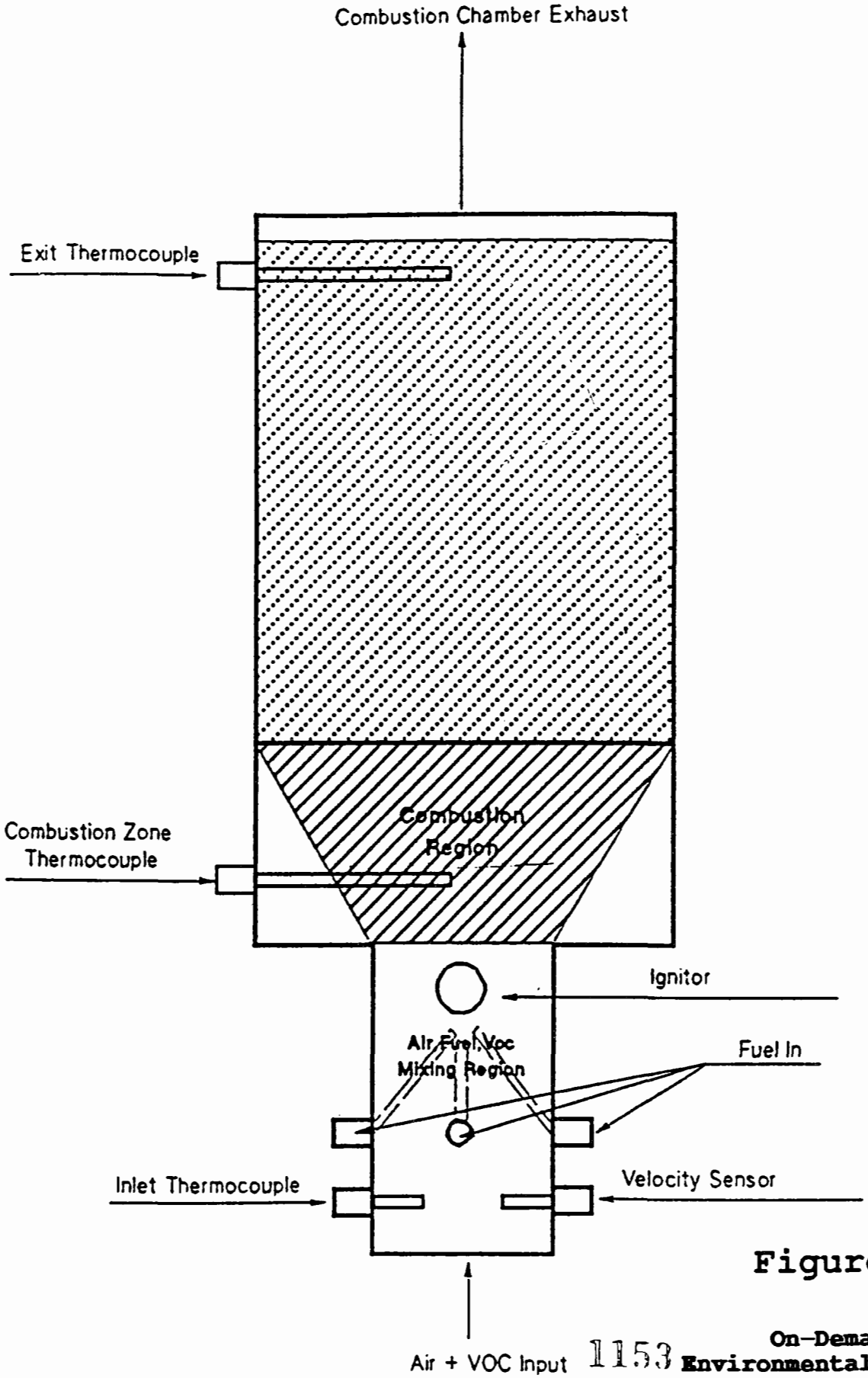

Figure 4

Mr. Rick Hamilton, On-Demand Environmental Systems

This presentation provided an example of actual batch emissions that currently are being controlled using thermal incineration. Several semiconductor facilities in California have installed the small incinerators that On-Demand designs and sells. The on-stream duration of VOC emissions from these facilities is representative of typical batch processing industries. Mr. Hamilton cited an example of VOC emissions' being in the exhaust stream of a semiconductor process only 18 percent of the time during an 18-hour workday.

Mr. Hamilton also showed two possible configurations for the units: (1) handling manifolded exhaust vents and (2) controlling individual exhaust vents at the point of generation. Units ranging in capacity to handle flowrates of 1,900 (cfm) down to units handling 65 cfm were shown, and Mr. Hamilton stressed the compactness of the units, which presumably would ease installation, especially for controlling process vent streams at the point of generation. Finally, there was some discussion of auxiliary equipment that has been employed with the systems, primarily in detecting VOC's or specific air toxics in the vent streams, and of the method of feedback control to augment or release fuel in the incinerator only during a VOC emission event.

CHEMICAL
MANUFACTURERS
ASSOCIATION

STATEMENT OF

TERRI RANGANTH

ON BEHALF OF

THE CHEMICAL MANUFACTURES ASSOCIATION

BEFORE THE

NATIONAL AIR POLLUTION CONTROL

TECHNIQUES ADVISORY COMMITTEE

ON THE

CONTROL TECHNIQUES GUIDELINES FOR BATCH PROCESS

NOVEMBER 21, 1991

2501 M Street, NW 202-887-1100
Washington, D.C. 20037 Telex 89617 (CMA WSH)

TESTIMONY OF THE CHEMICAL MANUFACTURERS ASSOCIATION BEFORE THE NATIONAL AIR POLLUTION CONTROL TECHNICAL ADVISORY COMMITTEE ON THE CONTROL TECHNIQUES GUIDELINES FOR BATCH PROCESSES
NOVEMBER 21, 1991

Good Afternoon. My name is Terry Ranganath, Air Quality Engineer with du Pont. I am happy to be before you today to present testimony of the Chemical Manufacturers Association (CMA) on the draft Control Techniques Guidelines for Control of Volatile Organic Compound Emissions from Batch Processes. CMA is a nonprofit trade association whose members comprise 90% of the productive capacity for basic chemicals in the United States. My presentation this afternoon will feature several of CMA's observations, concerns, and recommendations regarding CTG's, particularly the Batch Processing document

CMA fully appreciates the role of CTG's in setting Reasonably Available Control Technology (RACT) for nonattainment areas. Although styled as guidance documents, CTG's are in practice more than merely guidance. Air quality professionals in government, industry, and environmental groups recognize that CTG's are regarded as the final word in many regulatory programs. It is important that CTG's reflect the type of well informed and reasoned analysis that such influential documents demand.

Control Technique Guidelines hold special significance for companies that emit substances listed as hazardous air pollutants (HAPS) under section 112. Many of the 189 chemicals listed as HAPs are volatile organics. Companies that emit VOC's on the section 112 list face the prospect of complying with both RACT standards and MACT standards.

It is important that EPA recognize that RACT and MACT are two different standards. The Clean Air Act clearly contemplates that the "reasonably available" technology of RACT standards are less stringent than the "maximum degree of reduction" required under MACT. CMA is concerned that the CTG for Batch Processes confuses the two technology requirements.

CMA supports performance standards based on percent reduction as presented in the batch processes CTG. However, we believe the stringent 98% reduction efficiencies discussed in the document are not appropriate for setting RACT. In fact, the draft CTG reads at times like a MACT standard. When the Agency identifies the presumptive norm for RACT for Batch Processes, the discussion should be limited to control options more in line with RACT.

Sources that are required to meet both RACT and MACT for a particular emission must not be forced to comply with inconsistent standards. CMA believes that sources which comply with the more stringent MACT standard should be deemed to be in compliance with the less stringent RACT requirements.

The suggested RACT for Batch Processes is not identified from the list of options in the draft CTG. When the presumptive norm for RACT is identified, we recommend that the Agency revise the acceptable control efficiencies to reflect the realities of operating the presumptive control equipment.

Performance of control equipment varies with the type of chemicals involved and operating conditions. Therefore, instead of a single percent reduction efficiency, the CTG should identify an acceptable performance range which would reflect real life emission control operations.

There are two more areas of concern I would like to address this afternoon. The first regards the model used for synthetic resin manufacturing. The suspension-type polymerization operation illustrated in the draft CTG is not representative of typical synthetic resin manufacturing. In particular, the 100% vapor saturation assumed in the example does not account for the many operations which undergo full vessel cleansing with water. CMA recommends that the CTG consider more accurate examples of synthetic resin manufacturing.

Secondly, we disagree with the suggestion that SOCMI factors be used to estimate emissions from equipment leaks. This is inconsistent with Agency's refusal to allow SOCMI factors to be used in establishing baselines in the credit for early reduction program. Disallowing SOCMI factors in the credits program is a tacit admission that the SOCMI factors grossly overestimate actual emissions. We recommend that the Batch Processing CTG adopt the more accurate POSSEE database, which is the CMA designed data entry system for fugitive emissions testing.

To conclude my comments, I would like to reiterate CMA's support for the performance based format suggested in the Batch Processing CTG. CMA also supports the bubbling approach discussed in the CTG as a means of complying with overall process control requirements. We are interested in working constructively with EPA in developing technically sound CTG's and look forward to offering further input. CMA thanks the committee for the opportunity to offer our views on the CTG for Batch Processes. I'd be happy to answer any questions from the committee.

Ms. Terri Ranganath, Chemical Manufacturers Association (CMA)

Ms. Ranganath, E. I. du Pont de Nemours & Co., Inc., representing the CMA, made a presentation which is included in the attached handouts. CMA agrees with the performance-based standard of the options but stated that the use of the average SOCMI factors overstated emissions from leaking process components. Additionally, a concern was stated that the assumption EPA used for vapor space saturation also would overstate emissions. The prepared speech also stated that CMA agreed with the "bubbling approach as a means of compliance." [Ed. Note: No bubbling approach is discussed in the CTG; there is a RACT option that requires that facilities aggregate annual emissions and maximum flowrates from single unit processes to use in determining whether control is required.] Ms. Ranganath also suggested that the CMA's POSSE data base be used in estimating equipment leak emissions.

C. DISCUSSION

After all three presentations were made, the floor was opened up for questions from NAPCTAC members. This discussion is summarized below.

Ms. Deborah Sheiman of the Natural Resources Defense Council (NRDC) opened the discussion by asking Mr. McDonald what the difference was between RACT Options 2 and 3 on the slide. Mr. McDonald responded that RACT Option 2 represented the "aggregated" option, while RACT Option 3 represented the "individual" option for 90 percent control of sources. Both options are in accordance with the $5,000/Mg envelope used for illustrative purposes. The aggregated options, simply put, require that the annual emission rates from all process vents from single process lines be aggregated and then used in the RACT equation to yield a flowrate cutoff to determine whether the sources must be controlled. Mr. McDonald pointed out that the option does not require that facilities physically manifold their process vents together, but only requires that the control requirement be evaluated as if the vents were manifolded together. The impact of aggregation in an option is that more streams will require control for the same cost compare with the individual option, as the numbers indicated. Ms. Sheiman also questioned why the more stringent RACT options were not presented on the slide. Mr. McDonald responded that the slide was intended to show the format and impacts of the options, but for simplicity showed only four examples. All RACT options are presented in the draft CTG document.

Mr. Brian Taranto of Exxon Chemical Americas commented on the assumption made for estimating baseline (i.e., current control practices). He also said that the assumption that industries other than pharmaceuticals are uncontrolled results in overestimating the national emissions from batch processes. He asked Mr. McDonald what the effect of this overestimation would be on the estimated nationwide impacts of the CTG. Mr. McDonald responded that if the baseline emissions were in fact overestimated, the net emission reduction resulting from the CTG would decrease, as would the national cost associated with implementing it. Mr. Tarranto suggested that baseline control be more precisely evaluated. Ms. Ranganath repeated her concern that use of average SOCMI factors also overstate emissions [for equipment leaks].

Mr. John Pinkerton, Program Director of Air Quality for the National Council of the Paper Industry for Air and Stream Improvement, Inc., asked whether batch processing emissions would be covered under the Hazardous Organic NESHAP (HON). Ms. Susan Wyatt, Chief of CPB, stated that the HON specifically exempts VOC emissions from batch process vents at SOCMI facilities subject to

the HON. However, some industries utilizing batch processes, such as the polymers and resins industry and the pharmaceuticals industry, are on the source category list for NESHAP development efforts. Two NESHAP's currently are underway for the polymers and resins industry. These standards are expected to be completed within 4 years. Mr. Pinkerton expressed concern that the CTG might go into effect before a MACT standard for the same source, conceivably forcing facilities to undertake costs of controlling for a less stringent standard, only to have to retrofit or redesign a control system entirely for a more stringent standard a short time later.

Concern was also expressed about the way in which control device cost effectiveness was calculated. Mr. McDonald restated the methodology and stressed that the cost-effectiveness values obtained for the RACT options are really average values.

Ms. Vivian McIntire of Eastman Chemicals Company had several questions and comments on the CTG. The first concerned whether the methodology considered sizing of devices for peak flows that seemed to be insignificant to the overall emissions profile, as was described in the slides. Ms. Brenda Shine of Midwest Research Institute assured her that the size and, therefore, the capital cost of the control device was based on the peak or maximum flow. Ms. McIntire suggested that the "mass flux" term be introduced earlier in the document and pointed out some typographical problems with the document. Ms. McIntyre also asked about the specifics of the pressure testing provision contained in the equipment leaks negotiated regulation. This question was addressed by Mr. Bob Ajax (seated in the audience), formerly of the OAQPS Emission Standards Division, who was the EPA representative in the development of this regulation while an ESD Branch Chief. He explained the background of the regulation and added that the provision allowing pressure testing for batch equipment was taken directly from industry suggestions. Ms. McIntire also expressed her concern that the CTG would recommend stack testing as a means of verifying emission rate and added that stack testing of batch emissions could lead to erroneous results. [Ed. Note: EPA has not recommended stack testing to determine applicability for the batch processes CTG but rather an estimation procedure as of the date of this NAPCTAC meeting.

Mr. Taranto commended the batch team for including energy and other environmental impacts and asked EPA to address the need for facilities to obtain emission offsets and to do permitting.

VOLATILE ORGANIC LIQUID STORAGE CONTROL TECHNIQUES GUIDELINES DOCUMENT

A. EPA PRESENTATION

Mr. Mark Morris
Emission Standards Division
U.S. Environmental Protection Agency
Research Triangle Park, North Carolina 27711

Mr. Morris presented a summary of the draft CTG. This presentation is provided in full text below:

In ozone nonattainment areas there are thousands of tanks storing petroleum liquids and chemical products at facilities such as petroleum refineries, chemical plants, manufacturing facilities, and terminals and other distribution facilities. These tanks emit over 200,000 metric tons of volatile organic compounds (VOC) annually, making storage tanks one of the largest stationary sources of VOC emissions. It is possible to reduce these emissions by using readily available and cost-effective controls.

In this presentation we present the types of storage tanks and their emission mechanisms and controls. We also will present some reasonably available control technology options, or RACT options, and the benefits and costs of these options. Finally, we will discuss the implementation of RACT.

There are three basic types of tanks. There are fixed roof tanks, internal floating tanks, or IFR tanks, and external floating roof tanks, or EFR tanks. These tanks are typically aboveground and field erected.

Our first diagram is of a fixed roof tank. These tanks are typically large, with the average petroleum tank having a capacity of 1.3 million gallons, and the average chemical tank having a capacity of 160,000 gallons to 200,000 gallons. The fixed roof tank consists of a welded steel shell with a fixed roof. The fixed roof may be sloped or cone-shaped and supported by one or more columns, or it may be a self-supported dome without any supportive columns. The fixed roof tank is equipped with hatches that allow access into the tank. It is also equipped with a pressure-vacuum valve. This valve prevents damage to the tank by allowing a slight internal pressure or vacuum to exist within the tank. Since this valve allows only a slight pressure to exist within the tank, any pressure buildup in the tank would result in emissions through the valve.

There are two basic emission mechanisms of the fixed roof tank: working losses and breathing losses. Working losses are those losses that result due to a change in the liquid level in the tank. When liquid is withdrawn from the tank and the liquid level goes down, ambient air is drawn in through the pressure-vacuum valve. This air becomes saturated with VOC's and is expelled through the pressure-vacuum valve when the liquid level rises. Breathing losses result due to daily temperature changes, which cause the thermal expansion and expulsion of the vapor inside the tank. Breathing losses also result from changes in atmospheric pressure.

Some of the parameters that affect fixed roof tank emissions include the tank volume, the number of emptying/filling cycles, or turnovers, and the vapor pressure and molecular weight of the stored liquid. Emissions from typical petroleum and chemical fixed roof tanks are given on the next slide.

As shown in the table, working losses make up about 75 to 90 percent of the overall fixed roof tank emissions. You can also see from the table that the petroleum tank emits more than the chemical tank. Although the chemical tank experiences more turnovers, the petroleum tank emits more because it is larger. Emissions in nonattainment areas from fixed roof tanks are given in the next table.

Overall, fixed roof tanks emit a substantial amount of VOC's. About 23,000 fixed roof tanks emit approximately 87,000 megagrams per year. As shown in the table, about 11,500 petroleum tanks store liquids with vapor pressures less than or equal to .5 psia. These tanks emit about 13,700 megagrams per year, or about one megagram per tank per year. About 780 petroleum tanks emit approximately 8300 megagrams per year in the .5 to 1.0 psia vapor pressure range. This works out to be about eleven megagrams per tank per year. In the vapor pressure range of 1.0 to 1.5 psia, about 1800 petroleum tanks emit approximately 47,000 megagrams per year, or about 26 megagrams per tank per year. You can see from the table that there are no tanks used to store liquids with vapor pressures greater than or equal to 1.5 psia. This is due to the fact that the 1977 fixed roof tank CTG and state implementation plans prohibit the use of fixed roof tanks for storing liquids above this vapor pressure. These emissions can be reduced by using the controls listed on the next slide.

Fixed roof tank emissions can be reduced by using vapor recovery devices such as condensers and carbon adsorbers. Vapor control devices can also be used, such as incinerators. These devices are capable of reducing emissions by 95 percent or more. Another, more common option is to install an internal floating roof. On average, installing an IFR in a fixed roof tank reduces emissions by about 95 percent. Installing an IFR requires that the fixed roof tank be emptied, cleaned, and degassed. By installing an IFR, the fixed roof tank is converted to our second

tank type, the internal floating roof tank.

Again, the internal floating roof tank has two roofs. It has a fixed roof and a floating roof which rises and falls with the liquid level. The floating roof can rest in complete contact with the liquid, or it can rest on pontoons above the surface of the liquid. IFR's are typically made of aluminum, but can be made using materials such as steel or stainless steel. The floating roof covers most of the liquid surface, and thus prevents the vaporization of the stored liquid into the space above the floating roof. The floating roof does not cover the entire liquid surface; there is still a space between the floating roof and the tank wall in which vaporization can occur. Floating roofs are equipped with seals to close this space.

Some of the seal types that are used include vapor-mounted seals, liquid-mounted seals, and mechanical shoe seals. The vapor-mounted seal is mounted such that a vapor space exists between the seal material and the stored liquid. The liquid-mounted seal is mounted such that the seal material is submerged in the liquid and no vapor space exists between the seal and the liquid. The mechanical shoe seal consists of a metallic shoe that is held against the tank wall by springs or weights, and a seal which extends from the floating roof to the metallic shoe to close the vapor space.

Some of the parameters that affect the emissions from the IFR tank include the tank diameter and the vapor pressure and molecular weight of the stored liquid. There are two basic loss mechanisms of the IFR tank: static losses and working losses. Static losses consist of losses from seals, deck seams, and deck fittings. Working losses, again, result due to changes in the liquid level. When the liquid level goes down, the tank wall is exposed. The liquid that clings to the wall will vaporize and escape through the roof vents at the top of the tank. Emissions from a typical IFR tank are given on the next slide.

Again, static losses consist of seal losses, fitting losses, and deck seam losses. For the purposes of estimating costs and emissions, a baseline IFR tank was used which was equipped with a seamed floating roof with a vapor-mounted seal and typical fittings. For IFR's equipped with vapor-mounted seals, emissions can be reduced by taking out the vapor-mounted seal and installing a liquid-mounted seal. Emissions could also be reduced by installing a secondary seal above the vapor-mounted primary seal. For IFR's equipped with liquid-mounted seals, emissions can be reduced by installing a secondary seal above the liquid-mounted primary seal. Fitting losses on IFR's can be reduced by gasketing the fittings. Gasketing the fittings results in an emission reduction of about 50 percent. Some IFR fittings can be both gasketed and bolted to reduce emissions, as in the case of an access hatch. For seamed IFR's, emissions can be reduced or eliminated by taking out the seamed roof and installing a welded roof, which has no deck seams. Although

static losses can be reduced by using the controls described above, there are no controls available for reducing the working losses. IFR emissions in nonattainment areas are given in the next slide.

Overall, about 8000 tanks emit approximately 22,000 megagrams per year. Most of these emissions are from tanks storing liquids with vapor pressures greater than or equal to 1.5 psia. Most of these tanks are fixed roof tank conversions to IFR tanks due to the 1977 fixed roof tank CTG.

Our third tank type is the external floating roof tank. EFR tanks have no fixed roof but have a roof that rises and falls with the liquid level. EFR's are not typically used in the chemical industry. The losses from the EFR tank are similar to those of the IFR tank in that there are seal losses, fitting losses, and working losses. However, EFR losses differ from IFR losses in several ways. Since EFR tanks have no fixed roof, the wind affects the losses more than from the IFR tank. EFR tanks have welded roofs and therefore have no losses from deck seams as do IFR tanks. Emissions from a typical EFR tank are given in the next slide.

Again, static losses consist of only seal losses and fitting losses since EFR's have no deck seams. There were two baseline cases for EFR tanks due to past regulations. The baseline EFR storing a liquid with a vapor pressure less than 1.5 psia was one equipped with a mechanical shoe seal and typical fittings. The baseline EFR storing a liquid with any other vapor pressure was equipped with a mechanical shoe seal, secondary seal, and typical fittings. For EFR's with vapor-mounted seals, emissions can be reduced by taking out this seal and installing a liquid-mounted seal or a mechanical shoe seal, or by installing a secondary seal above the vapor-mounted seal. For EFR's with liquid-mounted seals or mechanical shoe seals, emissions can be reduced by installing secondary seals above these seals. Fitting emissions on EFR's can reduced by gasketing the fittings. Gasketing the fittings reduces emissions by about 95 percent. Again, although static losses can be reduced, there are no controls for reducing working losses. EFR tank emissions in nonattainment areas are given on the next slide.

About 10,000 EFR tanks emit about 108,000 megagrams per year. Most of these emissions are due to seals on tanks storing liquids with vapor pressures greater than 1.5 psia. Since the 1978 external floating roof CTG and state implementation plans require secondary seals above this vapor pressure, no further reductions can be achieved above this vapor pressure. However, fitting emissions can be reduced at all vapor pressures.

RACT options for VOL storage consist of control technology requirements for each tank type and some applicability criteria such as tank capacity cutoffs and liquid vapor pressure cutoffs. The control technology requirements for our selected options are,

for fixed roof tanks, to install an IFR with a double seal system or single seal system with a liquid-mounted or mechanical shoe seal. The fittings would also have to be controlled. The requirements for IFR and EFR tanks would be to install secondary seals and control fittings.

This next slide presents our selected RACT options. These options differ only in their applicability criteria since the control technology requirements are all the same. Option six is the most stringent option listed. It has a vapor pressure cutoff of .5 psia and capacity cutoffs of 20,000 gallons for fixed roof tanks and 40,000 gallons for IFR and EFR tanks. Option three in this table most closely resembles the VOL NSPS level of control. Option three has a vapor pressure cutoff of .75 psia and a capacity cutoff of 40,000 gallons for all tank types. The impacts of these options are given on the next slide.

Again, option six is our most stringent option. It results in an emission reduction of about 84,000 megagrams per year at a total annual cost of about 49.3 million dollars, and average cost effectiveness of about 590 dollars per megagram. Option six results in an emission reduction of about 80,000 megagrams per year at a total annual cost of about 37.2 million dollars, and average cost effectiveness of about 470 dollars per megagram. Also shown on this table are incremental cost effectiveness values. As shown in the table, going from option three to option four, which is essentially becoming more stringent than the latest NSPS level of control, results in an incremental cost effectiveness of about 2200 dollars per megagram.

Since RACT is a requirement for specific equipment, the format would be that of an equipment standard. However, vapor recovery or control devices are acceptable if they are capable of achieving 95 percent reduction. Some sort of compliance determination would need to be done to ensure proper installation and operation of the required controls.

For IFR tanks, this compliance determination would consist of an initial internal inspection of the tank and seals, followed by annual visual inspections, and internal inspections once every ten years. For EFR tanks, the compliance determination would consist of initial primary and secondary seal gap measurements, followed by annual secondary seal gap measurements, and primary seal gap measurements every five years. There would also be a visual inspection whenever the tank was empty.

The compliance schedule for the different tank types may differ. Installing RACT on IFR tanks requires that the tank be cleaned and degassed. The emissions that result from the cleaning process are actually greater than the emission reductions achieved by installing the controls. Therefore, it is recommended that the installation of RACT on IFR tanks be delayed to the next tank cleaning. Installing RACT on fixed roof tanks also requires that the tank be cleaned and degassed. However,

the emission reductions achieved by installing the controls are greater than the cleaning and degassing emissions. It is therefore recommended that there be no delay in the installation of RACT for fixed roof tanks. Installing RACT on EFR tanks does not require the tank to be cleaned and degassed. It is therefore recommended that there be no delay in the installation of RACT for EFR tanks

This concludes our presentation.

CONTROL TECHNIQUE GUIDELINES (CTG) FOR VOLATILE ORGANIC LIQUID STORAGE

NAPCTAC PRESENTATION

NOVEMBER 21, 1991

ORGANIZATION OF PRESENTATION

- Types of tanks
- RACT options
- RACT implementation

TYPES OF TANKS

- Fixed roof tanks
- Internal floating roof tanks (IFR's)
- External floating roof tanks (EFR's)

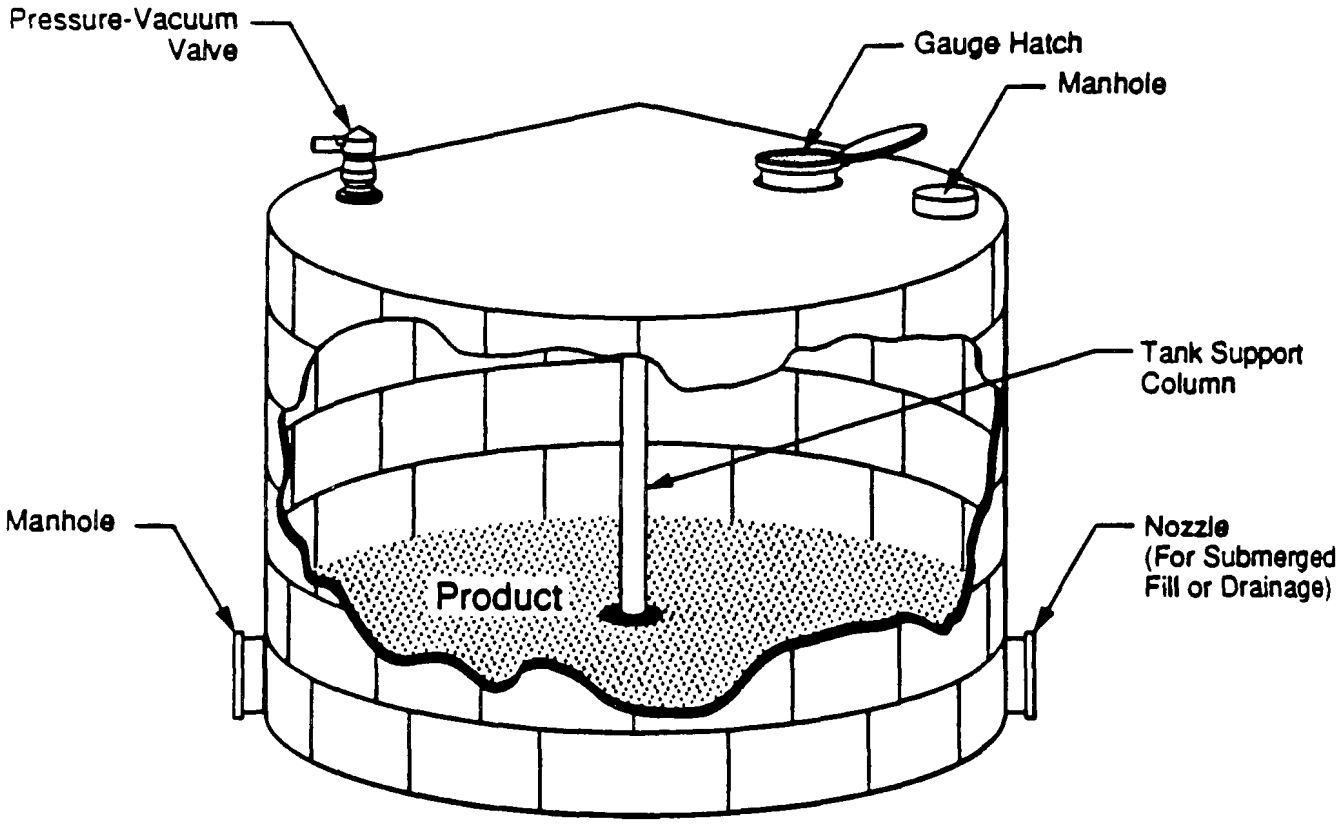
Pressure-Vacuum Valve
Gauge Hatch
Manhole
Tank Support Column
Manhole
Nozzle (For Submerged Fill or Drainage)
Product

EMISSIONS FROM A TYPICAL FIXED ROOF TANK

Losses	Chemical (160,000 gal, 50 turnovers/yr)		Petroleum (1.3 million gal, 11 turnovers/yr)	
	Mg/yr	%	Mg/yr	%
Breathing	0.9	15	5.0	25
Working	5.3	85	15.0	75
Total	6.2	100	20	100

EMISSIONS FROM FIXED ROOF TANKS IN NONATTAINMENT AREAS

Vapor pressure (psia)	Petroleum liquid		Chemical	
	Number	Emissions (Mg/yr)	Number	Emissions (Mg/yr)
≤ 0.5	11,500	13,700	8,200	10,500
0.5 - 1	780	8,300	450	2,250
1 - 1.5	1,800	47,000	450	4,300
≥ 1.5	0	0	0	0
Total	14,100	69,000	9,100	17,100

FIXED ROOF TANK CONTROLS

- Vapor recovery/control
- Install IFR

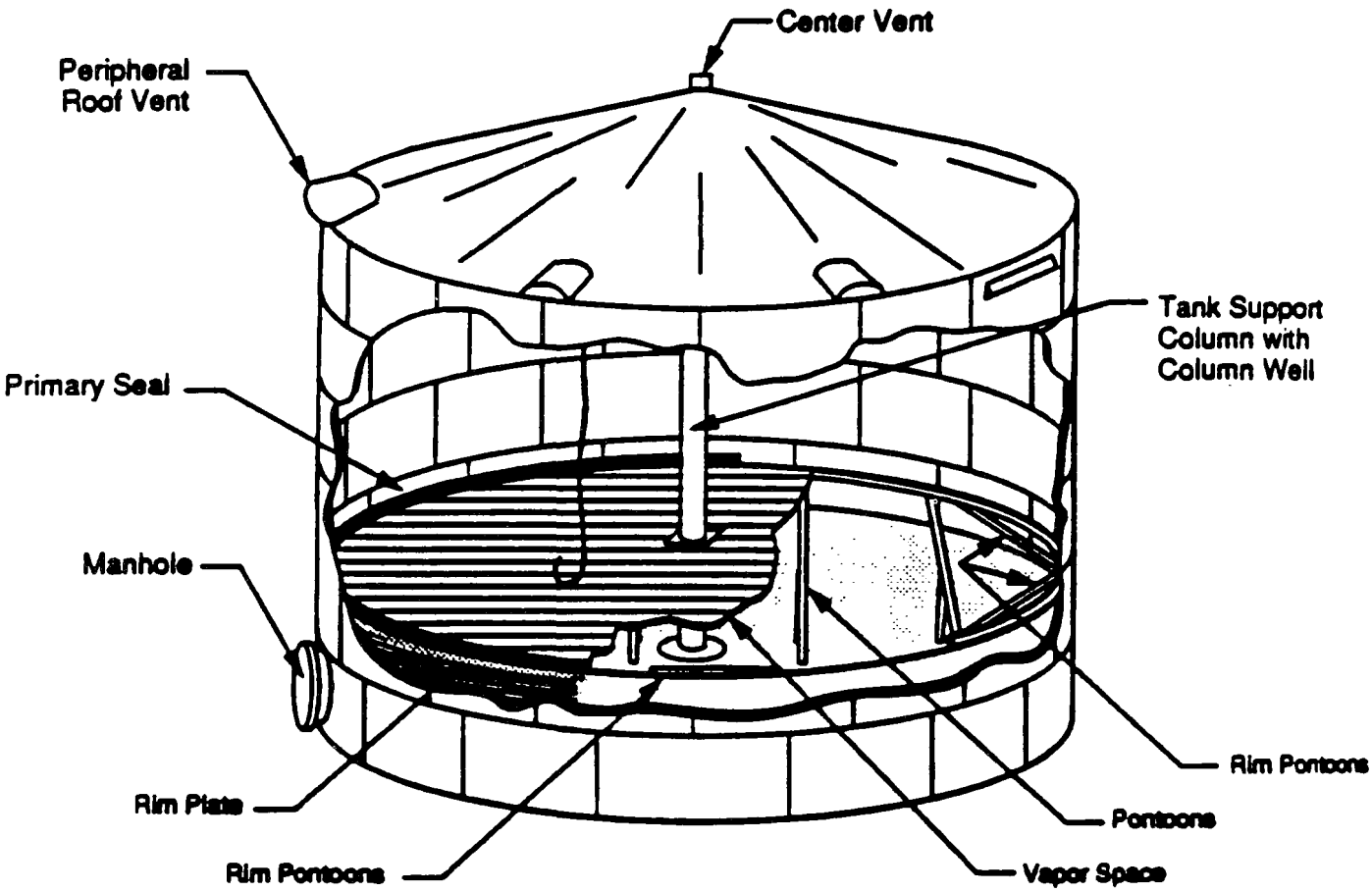
Center Vent
Peripheral Roof Vent
Tank Support Column with Column Well
Primary Seal
Manhole
Rim Pontoons
Rim Plate
Pontoons
Rim Pontoons
Vapor Space

EMISSIONS AND CONTROLS FOR A TYPICAL IFR TANK

	Seal losses	Emissions (Mg/yr)
Baseline →	Vapor-mounted	0.13
	Liquid-mounted	0.06
	Vapor-mounted and secondary seals	0.05
	Liquid-mounted and secondary seals	0.03
	Fitting losses	
Baseline →	Ungasketed	0.21
	Gasketed	0.11
	Deck seam losses	
Baseline →	Seams	0.04
	Welded	0
	Working losses	0.03

EMISSIONS FROM IFR TANKS IN NONATTAINMENT AREAS

Vapor pressure (psia)	Petroleum liquid		Chemical	
	Number	Emissions (Mg/yr)	Number	Emissions (Mg/yr)
≤0.5	130	18	0	0
0.5 - 1.0	25	24	250	200
1.0 - 1.5	60	84	250	300
≥1.5	5,260	18,810	1,400	1,500

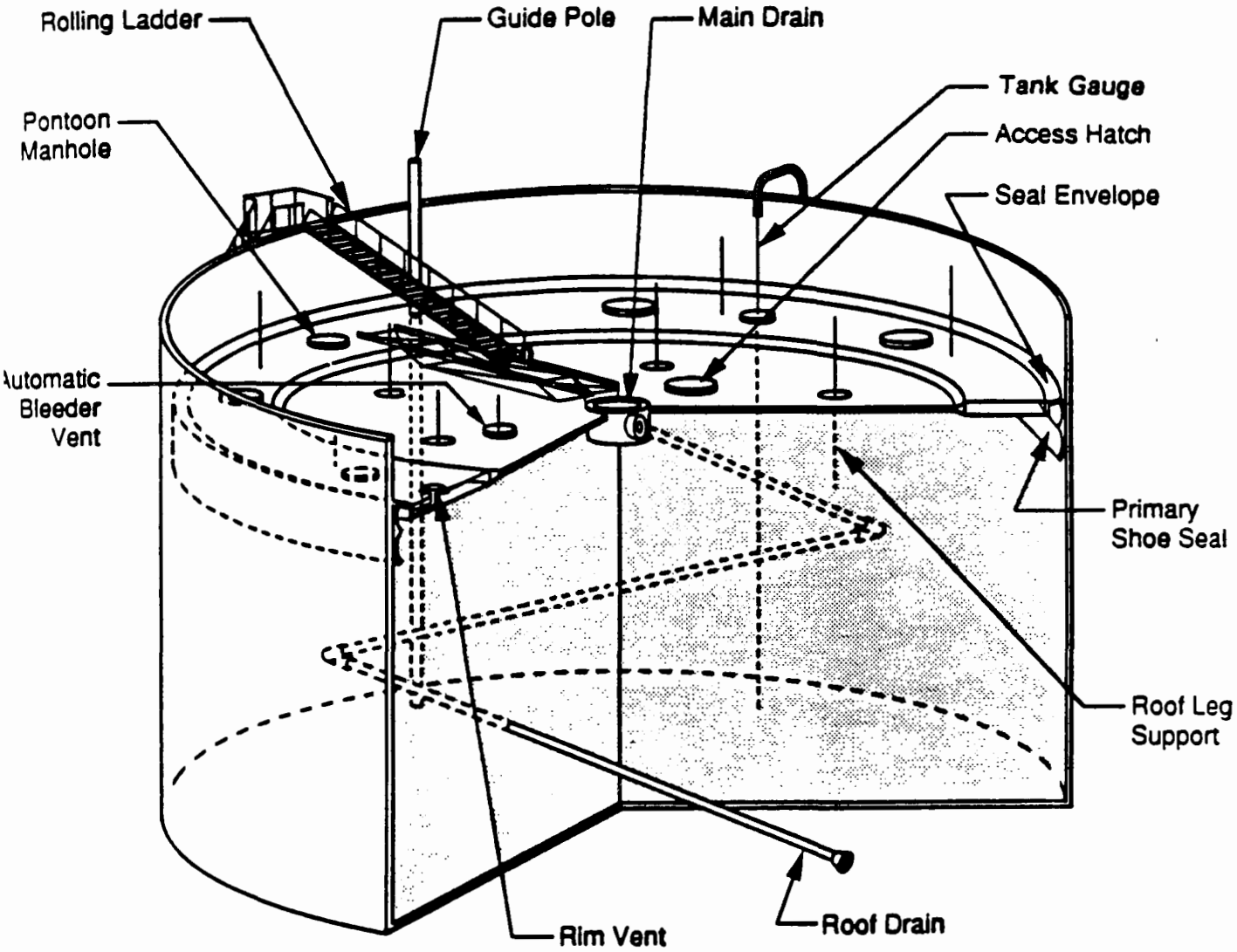
Rolling Ladder
Guide Pole
Main Drain
Tank Gauge
Pontoon Manhole
Access Hatch
Seal Envelope
Automatic Bleeder Vent
Primary Shoe Seal
Roof Leg Support
Rim Vent
Roof Drain

EMISSIONS AND CONTROLS FOR A TYPICAL EFR TANK

	Seal losses	Emissions (Mg/yr)
	Vapor-mounted	15.0
	Vapor-mounted and secondary	4.7
Baseline (< 1.5 psia) →	Mechanical shoe	1.25
Baseline (≥ 1.5 psia) →	Mechanical shoe and secondary	0.12
	Liquid-mounted	0.70
	Liquid-mounted and secondary	0.10
	Fitting losses	
	Ungasketed	0.24
	Gasketed	0.02
	Working losses	0.22

EMISSIONS FROM EFR SEALS AND FITTINGS IN NONATTAINMENT AREAS

Vapor pressure (psia)	Number of tanks	Seal emissions (Mg/yr)	Fitting emissions (Mg/yr)	Total
≤0.5	960	450	73	523
0.5 - 1	300	330	75	405
1 - 1.5	470	1,250	190	1,440
≥1.5	8,000	91,500	15,600	105,400

RACT OPTION VARIABLES

- Control technology
- Tank capacity
- Liquid vapor pressure

RACT CONTROL TECHNOLOGY

- Existing FIXED ROOF TANK -

  INSTALL IFR EQUIPPED with

  - Vapor mounted primary and secondary seals

    OR

  - Liquid mounted primary seal

    OR

  - Shoe seal

    AND

  - Control fittings
- Existing IFR
  - Control fittings
  - Install secondary seal over vapor mounted primary seal
- Existing EFR's
  - Control fittings
  - Install secondary seal

RACT OPTIONS

Option No.	Small fixed roof (20K < V <40K gal)	Large fixed roof (V >40K gal)	Internal floating roof (V >40K gal)	External floating roof (V >40K gal)
I	--	VP>1.0	VP>1.5	VP>1.5
II	--	VP>1.0	VP>1.0	VP>1.0
III	--	VP>0.75	VP>0.75	VP>0.75
IV	--	VP>0.5	VP>0.5	VP>0.5
V	VP>1.5	VP>0.5	VP>0.5	VP>0.5
VI	VP>0.5	VP>0.5	VP>0.5	VP>0.5

RACT OPTION IMPACTS

Option No.	Emission reduction (Mg/yr)	Total annual cost ($\$10^6$/yr)	Cost effectiveness ($/Mg)	Incremental cost effectiveness ($/Mg)
I	66,200	23.8	360	N/A
II	73,500	32.0	430	1,100
III	79,700	37.2	470	900
IV	82,800	44.0	530	2,200
V	83,400	46.1	550	3,800
VI	84,000	49.3	590	4,800

RACT IMPLEMENTATION

- Equipment format
- Compliance determination

COMPLIANCE DETERMINATION FOR IFR's

- Initial internal inspection
- Annual visual inspection
- Internal visual inspection once every 10 years

COMPLIANCE DETERMINATION FOR EFR's

- Initial gap measurement
- Annual secondary seal gap measurements
- Primary seal gap measurement once every 5 years
- Visual inspection whenever tank is empty

COMPLIANCE SCHEDULE

- IFR's - existing IFR's required to install RACT at next scheduled cleaning or 10 years after promulgation
- Fixed roof tanks
- EFR's

B. INDUSTRY PRESENTATIONS

Presentation to the USEPA's NAPCTAC
Commenting on the Draft CTG for VOL Storage Document

Sheraton Inn University Center
Durham, North Carolina

Presented by Rob Ferry
Conservatek Industries, Inc.
Chapel Hill, North Carolina

November 21, 1991

Summary

The conversion of external floating roof tanks to internal floating roof tanks by covering the tank with a self-supporting fixed roof is an established equipment option, recognized by both the American Petroleum Institute (API) and the U. S. Environmental Protection Agency (EPA). The type of self-supporting roof which is typically used for this purpose is the aluminum dome. This fact is also recognized by both API and EPA. It can be readily demonstrated from the API Publications 2517 and 2519 that this equipment option has lower emissions than either internal floating roof tanks which have column-supported fixed roofs, or typical external floating roof tanks.

The recommendations of this presentation are that:

- covering an external floating roof tank with a self-supporting roof be recognized as an equipment option,
- this equipment option be described as typically being an aluminum dome, and
- this equipment option be recognized as being at the most efficient end of the hierarchy.

Documentation

Recognition of external floating roofs being converted to internal floating roofs by covering with a self-supporting fixed roof:

API - Publication 2519 (excerpt attached)
EPA - AP-42 (excerpt attached)

The typical type of retrofit self-supporting fixed roof is an aluminum dome:

API - Standard 650 Appendix G (publication scheduled for December 1991)
EPA - CTG for Control of Organic Compound Emissions from Industrial Wastewater (excerpt from draft attached)

This equipment option has lower emissions than either internal floating roof tanks with columns, or external floating roof tanks:

This is a straightforward conclusion from the API Publications. The conversion to an internal floating roof tank by covering an external floating roof tank would result in a floating deck with no deck seams, columns or stub drains. API Publication 2519 has separate figures for typical fitting loss factors for column-supported fixed roofs and self-supporting fixed roofs. This comparison is summarized in a Table from an article published in the Oil and Gas Journal (copy attached).

API Publication 2517 expressly states that emissions from external floating roof tanks is wind dependent, and API Publication 2519 expressly states that the wind movement in a tank which is covered with a freely vented fixed roof is not significant. Covering the external floating roof tank, then, eliminates the effect of the primary force which induces vapor losses (i.e. the wind).

The magnitude of this reduction is illustrated on the attached Figure 1 for both a typical fitting scenario and for the case of a slotted gauge pole. There is not presently a table of loss factors for the fittings with this equipment option, and alternate methodologies result in different factors. This is illustrated in Figure 1 by showing a range for the loss factors, which is bounded by the two commonly suggested methodologies. The API is currently preparing a contract to have the previous test data reviewed, and the conflict in the factors resolved. It is readily apparent, however, that wherever the most appropriate value may fall within the defined range, it would still represent a significant reduction in emissions.

Conclusion

If the CTG is silent with respect to this equipment option, then the States may not recognize the emission control efficiency that a user achieves by covering an external floating roof tank with a dome. Such an omission might serve, in effect, to discourage the use of a very effective control technology. I respectfully request, therefore, that the language of the CTG be modified to incorporate the recommendations set forth in the Summary above. This could be achieved by adopting the specific language which is included in the API comments concerning this issue, and additionally including descriptive language identifying aluminum dome roofs, similar to that in the Industrial Wastewater CTG (excerpt attached).

SECTION 2—DESCRIPTION OF INTERNAL FLOATING-ROOF TANK COMPONENTS

2.1 Internal Floating-Roof Tanks

Internal floating-roof tanks are cylindrical vessels that have both a fixed roof over the top of the tank, and a floating deck that rests on the liquid stock surface. There are two basic types of internal floating-roof tanks: (1) tanks in which the fixed roof is supported by vertical columns within the tank, which are typical of fixed-roof tanks fitted with an internal floating deck; and (2) tanks with a self-supporting fixed roof, with no internal support columns, which are typical of external floating-roof tanks covered with a fixed roof. Tanks initially constructed with both a fixed roof and a floating deck may be of either type.

In addition to a cylindrical shell and fixed roof, the basic components of an internal floating-roof tank include: (1) a floating deck; (2) an annular rim seal attached to the perimeter of the floating deck; and (3) fittings that penetrate the floating deck and provide support for the fixed roof or serve operational functions. General types of these components, which are available in a range of commercial designs, are described in this section. Included in these descriptions are comments on evaporative loss potential, as well as some design and operational characteristics. There are other factors, such as tank maintenance and safety, which are important in designing and selecting tank equipment, but which are outside the scope of this publication.

The use of an internal floating deck will reduce the concentration of hydrocarbon vapor in the space between the floating deck and the fixed roof from that which would occur in a fixed-roof tank. This could result in the occurrence of flammable vapor-air mixtures within the tank. To minimize the occurrence of flammable vapor-air mixtures, vents are installed at the top of the tank shell or in the fixed roof to provide circulation of air through the space between the fixed roof and the floating deck. API Standard 650 [1], Appendix H, specifies the use of such vents and outlines design details for the storage of petroleum liquids. Such tanks are referred to as *freely vented* internal floating-roof tanks and are those for which the loss-estimating procedures in Section 1 are applicable.

Closed internal floating-roof tanks refer to those which are vented only through a pressure/vacuum relief vent. Such tanks are sometimes used in chemical liquid service and in petroleum liquid service where API Standard 650 is not used. These tanks are typically designed with auxiliary safety devices, as specified by the user. The loss-estimating procedures in Section 1 are not applicable to closed internal floating-roof tanks.

2.2 Floating Decks

Floating decks are typically used to control evaporative stock loss. The basic design concept is to reduce the liquid surface exposed to evaporation to a minimum by placing a floating deck in contact with the liquid surface or by confining a layer of saturated vapor under a vapor-tight deck floating above the liquid. The loss of vapor otherwise displaced from fixed-roof tanks by filling and breathing is virtually eliminated. Evaporation loss does occur during standing storage through the annular rim space, deck fittings, and, in some cases, deck seams.

Floating decks are used in volatile stock service, for stocks with a true vapor pressure at storage conditions below atmospheric pressure (that is, nonboiling). They are available in virtually all commercial tank sizes, with diameters ranging from about 400 feet to 20 feet, and with slight modification, down to 8 feet. Methods and materials have been developed to properly seal the annular space between the tank shell and the deck rim plate, as well as sealing around any number of fittings that penetrate the deck.

Floating decks are currently of two general types: (1) decks constructed by bolting (or mechanically joining by any method) sheets or panels of deck material and (2) decks of welded construction. Decks with bolted seams are typically made of lightweight materials, whereas welded decks are typically made of steel plates. Both types of decks are typically designed in accordance with API Standard 650, Appendix H.

Floating decks can be further characterized by the location of the deck relative to the liquid stock surface. A deck that is supported above the liquid stock surface by bouyant structures is referred to as a noncontact deck. A deck that floats directly on the liquid stock surface is referred to as a contact deck. Steel decks are typically of contact design, whereas nonferrous materials are used in both noncontact and contact designs.

These general types and designs of floating decks are currently available in many different materials and with various design features. The basic types of floating decks used in internal floating-roof tanks are described in 2.2.1 through 2.2.4 and illustrated in Figure 6. More detailed descriptions are included in Bulletin 2513 [7] for the welded deck types.

2.2.1 NONCONTACT DECKS WITH BOLTED SEAMS

This deck type is currently available in two basic designs. The most common design consists of sheet aluminum bolted to an aluminum grid framework to form

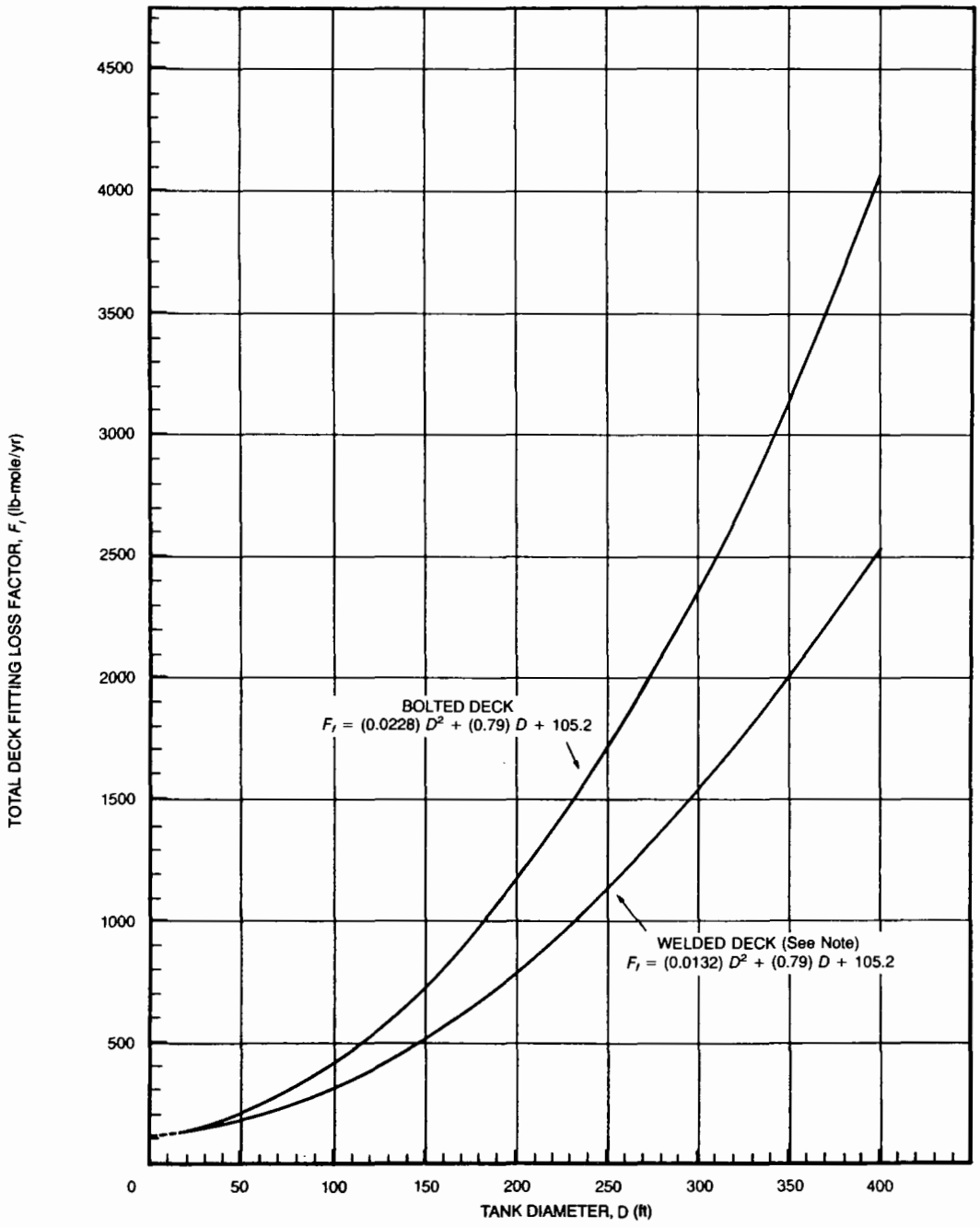

BASIS: Fittings include: (1) access hatch, with ungasketed, unbolted cover; (2) adjustable deck legs; (3) gauge float well, with ungasketed, unbolted cover; (4) sample well, with slit fabric seal (10 percent open area); (5) 1-inch diameter stub drains (only on bolted deck); and (6) vacuum breaker, with gasketed weighted mechanical actuation. This basis was derived from a survey of users and manufacturers. Other fittings may be typically used within particular companies or organizations to reflect standards and/or specifications of that group. This figure should not supersede information based on actual tank data.

NOTES: If no specific information is available, assume welded decks are the most common/typical type currently in use in tanks with self-supporting fixed roofs.

Figure 2—Total Deck Fitting Loss Factors (F_f) for Typical Deck Fittings in Tanks with Self-Supporting Fixed Roofs

External Floating Roof Tanks - A typical external floating roof tank is shown in Figure 4.3-2. This type of tank consists of a cylindrical steel shell equipped with a roof which floats on the surface of the stored liquid, rising and falling with the liquid level. The liquid surface is completely covered by the floating roof, except at the small annular space between the roof and the tank wall. A seal (or seal system) attached to the roof contacts the tank wall (with small gaps, in some cases) and covers the annular space. The seal slides against the tank wall as the roof is raised or lowered. The purpose of the floating roof and the seal (or seal system) is to reduce the evaporation loss of the stored liquid.

Internal Floating Roof Tanks - An internal floating roof tank has both a permanent fixed roof and a deck inside. The deck rises and falls with the liquid level and either floats directly on the liquid surface (contact deck) or rests on pontoons several inches above the liquid surface (non-contact deck). The terms "deck" and "floating roof" can be used interchangeably in reference to the structure floating on the liquid inside the tank. There are two basic types of internal floating roof tanks, tanks in which the fixed roof is supported by vertical columns within the tank, and tanks with a self-supporting fixed roof and no internal support columns. Fixed roof tanks that have been retrofitted to employ a floating deck are typically of the first type, while external floating roof tanks typically have a self-supporting roof when converted to an internal floating roof tank. Tanks initially constructed with both a fixed roof and a floating deck may be of either type.

The deck serves to restrict evaporation of the organic liquid stock. Evaporation losses from decks may come from deck fittings, nonwelded deck seams, and the annular space between the deck and tank wall. Typical contact deck and noncontact deck internal floating roof tanks are shown in

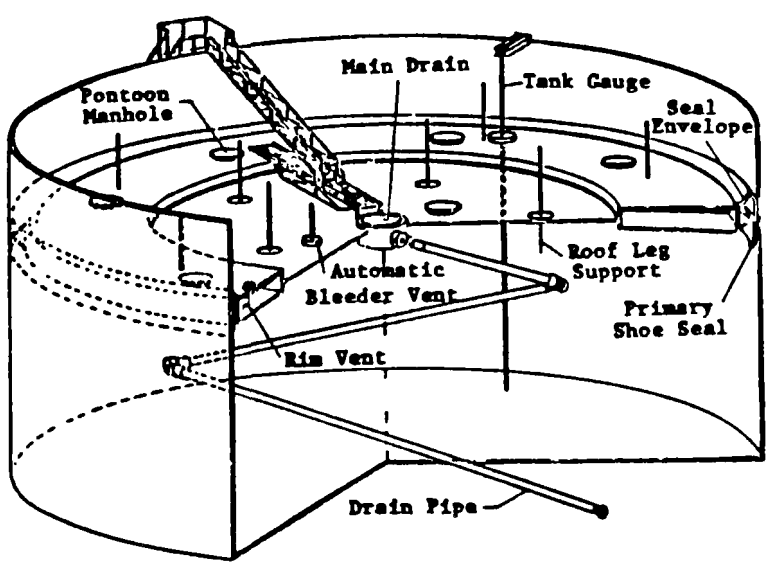

Figure 4.3-2. External floating roof tank.[1]

from AP-42

United States Environmental Protection Agency

Office of Air Quality Planning and Standards
Research Triangle Park, NC 27711 April 1989

Air

EPA

Guideline Series

Control of Volatile Organic Compound Emissions from Industrial Wastewater

Volume I - Chapters

Preliminary Draft

CTG

1195

ratio of the tank diameter to the depth of the wastewater contained in the tank.

An existing open-top tank can be converted to a fixed-roof tank by retrofitting the tank with a dome roof. Aluminum, geodesic dome roofs are available from several manufacturers. These domes have been used successfully to cover petroleum and chemical storage tanks. The domes are clear-span, self-supported structures (i.e., require no internal columns be placed in the tank) that can be installed on open-top tanks ranging in diameter from 5 to over 100 m (15 to over 330 ft).

Although fixed-roof tanks provide large reductions in organic air emissions from open-top tanks, fixed-roof tanks still can emit significant quantities of organics. The major sources of organic air emissions from fixed-roof tanks are breathing losses and working losses. Breathing losses occur from the expulsion of vapor through the roof vents because of the expansion or contraction of the tank vapor space resulting from daily changes in ambient temperature or barometric pressure. These emissions occur in the absence of any liquid level change in the tank. Working losses occur from the displacement of vapors resulting from filling and emptying of the tank.

Breathing and working losses from fixed-roof tanks can be reduced by installing an internal floating roof, connecting the tank roof vents to an add-on control device, or installing pressure-vacuum relief valves on the tank roof vents. The use of internal floating roofs in fixed-roof tanks is discussed in Section 4.3.2.2.

For add-on control applications, vapors are contained in the tank until the internal tank pressure attains a preselected level. Upon reaching this level, a pressure switch activates a blower to collect the vapors from the tank and transfer the vapors through piping to the add-on control device. As a safety precaution, flame arrestors normally are installed between the tank and control device. Other safety devices may be used such as a saturator unit to increase the vapor concentration above the upper explosive limit. Add-on control devices for organic vapors are discussed in Section 4.4.

Fig. 4

Fitting losses

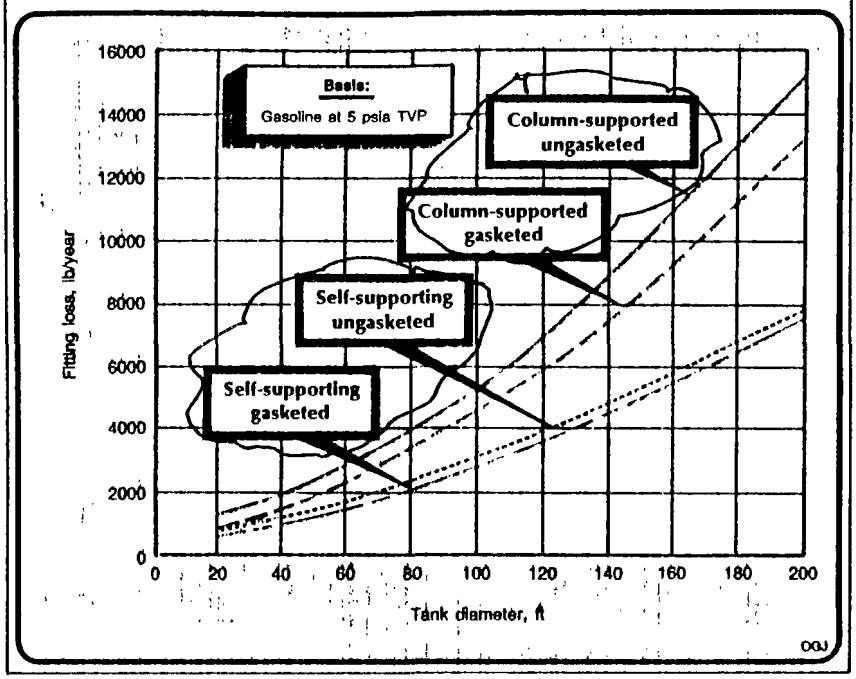

with the same functionality. Further, losses from some deck seams in IFRTs, unlike EFRTs, contribute significantly to total loss. Fig. 1 shows an example, for a specific case, of how highly variable losses are from the two types of floating-roof tanks, with varying wind speed and different rim seal and floating deck types. Such comparisons can be made for specific applications to identify cost-effective loss control measures.

Stock inventory control. The escalating value of petroleum stocks over the past decade has caused industry to focus attention on programs emphasizing accurate stock inventory accounting and control. Publication 2519, together with improved operational and maintenance practices, provides the operator with more accurate procedures to estimate evaporative stock losses, thus allowing for the evaluation of alternative controls that will enable the operator to select optimum loss control methods.

Environmental applications. An emission inventory for existing tanks can be more accurately developed using the new publication. Alternative design features can be evaluated in the process of providing emission estimates required in permit applications for modified or new tanks.

The loss equations yield estimates of the total hydrocarbon vapor emitted to the atmosphere. For environmental considerations, emissions of interest are generally only the reactive hydrocarbon vapor, which is typically defined to exclude methane and ethane. Therefore, these components, if present, should be subtracted from the calculated losses for environmental applications. The results of this API study, as well as the previous study on EFRTs, have provided the basis for API reviews and comments on proposed environmental tankage emission control regulations. These results were provided in full detail to the Environmental Protection Agency, most recently during the public review period for the currently proposed regulation on benzene storage tanks.

Calculating IFRT losses

Formulation of equations. Because essentially no data were generally available on evaporative losses from IFRTs, API/CELM developed a comprehensive test program to identify and independently evaluate all the sources of loss in an IFRT and the equipment and stock parameters that affect losses from each source.

CELM formed a task group to oversee the test program, to analyze the results, and to document the resulting calculation procedures. The test program, conducted principally by Chicago Bridge & Iron Co. (CB&I), and the data analysis procedures are described in detail in the documentation records for the publication.

Losses primarily occur during standing storage. These losses occur from:

1. The rim seal area around the perimeter of the floating deck
2. The area where fittings (e.g., columns that support the fixed roof that covers the tank) penetrate through the floating deck
3. Bolted seams in the floating deck

Losses can also occur during and following emptying of the tank, due to evaporation of the stock which clings to the tank shell. These withdrawal losses are accounted for in the publication, but are often negligible. Thus, to avoid unnecessary complexity, the following discussion will assume that total IFRT losses can be approximated by the standing storage loss.

The loss equations account for all the important tank and stock parameters that affect loss. Thus, the most accurate loss estimates are obtained when all of the parameters are specified for a given tank. However, in many cases, little specific information is practically available about the tank or tanks for which an estimate of loss is desired.

Thus, to accommodate the interests of both maximum accuracy, when parameters are known, and maximum utility, when parameters are not known, the publication includes information on the most common/typical values for those parameters which may not routinely be known.

Minimum input. The minimum input necessary to develop a loss estimate includes:

- Stock type (i.e., refined petroleum stock, crude oil, or petrochemical)
- True vapor pressure
- Tank type (i.e., column-supported or self-supported fixed roof)
- Tank diameter

All other parameters can be specified for existing tanks using the stated most common/typical values (e.g., vapor-mounted seal, column-supported fixed roof, bolted deck).

By specifying these four input parameters, estimates of total loss, as well as the losses from each of the three sources, can be calculated.

Fig. 2 shows how total and source-specific losses increase with increasing tank diameter when the other three basic parameters are constant and specified as noted. Similar plots in which the other parameters are varied would show:

- That total loss is roughly proportional to TVP
- That total loss from a petrochemical is equal to that from gasoline (for the same TVP), but that crude oil loss is approximately 60% lower
- That the fitting loss is significantly reduced if no columns are used to support the fixed roof.

Additional parameters. In addition to the four required input parameters discussed in the preceding, several other parameters, if known, can be used to improve the total loss estimate and to evaluate various loss control

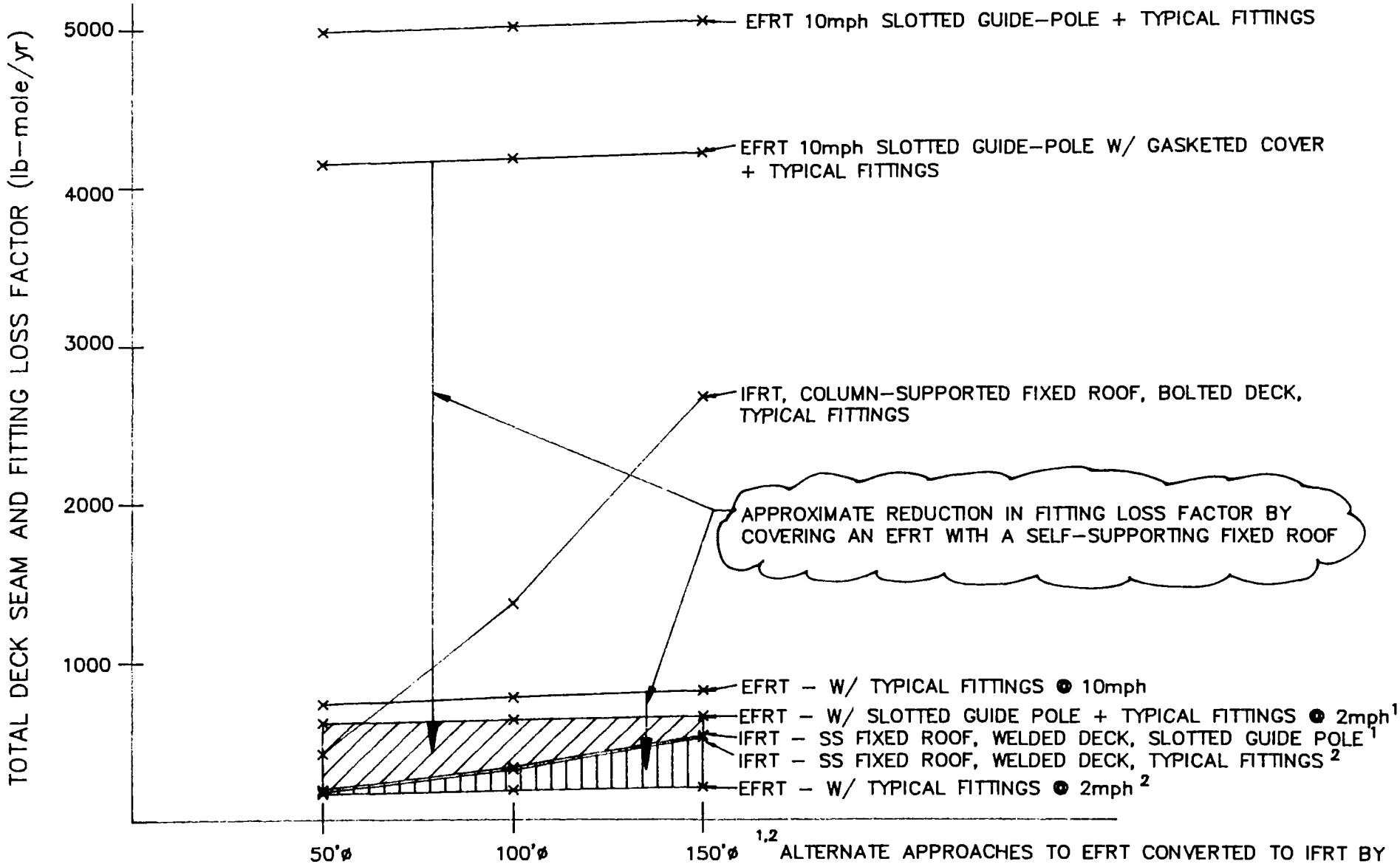

HIERARCHY OF EQUIPMENT OPTIONS
FITTINGS & DECK SEAMS

FIGURE 1

[1,2] ALTERNATE APPROACHES TO EFRT CONVERTED TO IFRT BY COVERING WITH A SELF-SUPPORTING FIXED ROOF. API IS CURRENTLY REVIEWING FITTING FACTOR DATA TO CLARIFY THIS SCENARIO.

NOTE: FITTING SCENARIOS ARE TAKEN AS THE TYPICALS DESCRIBED IN API PUBLICATIONS 2517 AND 2519 UNLESS NOTED OTHERWISE.

CHEMICAL
MANUFACTURERS
ASSOCIATION

STATEMENT OF

TERRI RANGANATH

ON BEHALF OF

THE CHEMICAL MANUFACTURERS ASSOCIATION

BEFORE THE

NATIONAL AIR POLLUTION CONTROL TECHNIQUES ADVISORY COMMITTEE

ON THE

CONTROL OF VOLATILE ORGANIC COMPOUND EMISSIONS FROM

VOLATILE ORGANIC LIQUID STORAGE IN FLOATING AND

FIXED ROOF TANKS CONTROL TECHNIQUES GUIDANCE DOCUMENT

NOVEMBER 21, 1991

2501 M Street, NW 202-887-1100
Washington, D.C. 20037 Telex 89617 (CMA WSH)

CHEMICAL MANUFACTURERS ASSOCIATION
TESTIMONY BEFORE THE NATIONAL AIR POLLUTION CONTROL
TECHNIQUES ADVISORY COMMITTEE ON THE
CONTROL OF VOLATILE ORGANIC COMPOUND EMISSIONS FROM
VOLATILE ORGANIC LIQUID STORAGE IN FLOATING AND
FIXED ROOF TANKS CONTROL TECHNIQUES GUIDANCE DOCUMENT

My name is Terri Ranganath. I am air quality engineer for E.I. du Pont de Nemours and Company. I am speaking to you today on behalf of the Chemical Manufacturers Association (CMA) where I serve as the work group leader for the New Source Performance Standards/Control Technology Work Group. CMA is a nonprofit trade association whose member companies represent over 90 percent of the production capacity of basic industrial chemicals in the United States. We are pleased to have this opportunity to present our views to the National Air Pollution Control Techniques Advisory Committee.

CMA appreciates the statutory requirements for controlling volatile organic compound (VOC) emissions and the requirement that ozone nonattainment areas be regulated by reasonably available control technology (RACT) standards. Because they form the bases for RACT standards, CTG's must be documents of high technical quality.

At a minimum, CTG's should accurately describe the types of facilities that will be affected by RACT standards. CMA, however, does not believe that the "presumptive norm" described in the CTG document for storage tanks accurately describes the types of volatile organic liquid (VOL) storage vessels that are commonly in use by the vast majority of the chemical industry. The applications in the CTG were based primarily upon model tanks and model liquids generally employed by the petroleum industry and can not be readily extended to chemical facilities without consideration for the unique components of the industry. Therefore, CMA believes that the information contained in the CTG does not have broad based applicability across the chemical industry.

Also, while the CTG has broadly defined the types of facilities which will be subject to the RACT standards, the document does not clearly establish the goals or the applicability parameters. CMA believes that both issues need to be definitively addressed prior to publication of final guidance document to avoid any confusion on the part of the regulated community.

CMA has several recommendations regarding the content of the storage tank CTG and the approach for defining what is RACT for sources of VOC's from liquid storage tanks.

The Applicability Parameters and Goals of the CTG Are Not Clearly Defined

In explaining what will be considered an affected source for the purposes of this particular CTG, the document allows for the state regulatory agency to define the specific source or "affected tank" which will be covered by RACT. The CTG also suggests that the state agency define vapor pressure and tank applicability ranges for each type of tank. While CMA supports this basic premise, we believe that states require guidance in setting vapor pressure cut-offs for RACT applicability. Further, EPA needs to clearly define for state agencies the scope of this CTG and its relationship to previously published RACT standards.

The CTG, as presently written, does not clearly define for state agencies the scope of this guidance. Nor does it clearly define its relationship to previously published control standards. Environmental managers will be faced with the question of whether the intended purpose of the CTG is to incorporate the two previously published CTG's and three NSPS documents, or to merely cover facilities not addressed in these documents. The confusion could lead facilities to duplicate their efforts unnecessarily. The intention of the CTG needs to be stated precisely and directly in order to avoid such an outcome.

The CTG also needs to establish parameters for vapor pressure cut-offs. The CTG suggests that state agencies define vapor pressure and applicability range for each type of storage tank. While CMA supports this premise, we believe that RACT standards should issue guidelines for setting vapor pressure cut-offs. The vapor pressure baseline discussed does not adequately consider low volatility liquids such as monomers like styrene, which can polymerize and cause floating roof tanks to fail and not operate as a control device. Establishing cut-offs avoids setting levels of control which result in diminishing returns, both incrementally and economically.

The CTG Inadequately Addresses Tanks with a Storage Capacity of Less Than 40,000 Gallons

Throughout the CTG, the EPA applies what is defined as the "presumptive norm" for RACT to tanks with volume and vapor pressure cut-offs of 40,000 gallons and 1.5 psia. This "norm" and all the accompanying estimations were based on the petroleum industry. While there exists some similarities between the petroleum and chemical industries, the two do not parallel one another closely enough for the standards described in the CTG to serve as an accurate reflection of what may be achievable by the chemical industry.

EPA also does not consider or adequately address tanks with a storage capacity of less than 40,000 gallons. Many of the tanks utilized in the chemical industry are not 40,000 gallons or larger as the EPA has assumed in the CTG. EPA also erroneously assumes that

horizontal tanks generally have a capacity of less than 20,000 gallons. The CTG states that "... most storage tanks below 20,000 gallons are horizontal rather than vertical tanks and a large percentage of these tanks are also underground...". Across the chemical industry vertical tanks are operated which have capacities of less 20,000 gallons and there are numerous horizontal tanks with capacities above 20,000 gallons. Further, based on this incorrect assumption, the CTG document neglects to include any emission profiles for tanks with capacities smaller than 20,000 gallons.

In addressing tanks with capacities of 20,000 to 40,000 gallons, the CTG considers only one vapor pressure and two turnover rates. CMA recommends that the EPA expand the emission profiles to the full range of vapor pressures discussed in the CTG document, as well as to tanks with capacities less than 20,000 gallons. Also, smaller tanks usually have a higher turnover rate than two.

The CTG Overestimates the Control Efficiency of Internal Floating Roofs

Throughout the CTG, the equipment options and the estimated control efficiencies described are again, based on the petroleum industry, rather than the chemical industry. This basis for evaluating the effectiveness of the control techniques are inappropriate when one considers expanding the efficiencies to process units which are unique to the chemical industry.

In estimating the rate of emissions from internal floating roof tanks, the CTG acknowledges several factors, including type of roof and seal selected, number of turnovers, tank volume and liquid type, will affect the final amount of emission reductions achieved by the **model** fixed roof tank. Based on these factors, all of which were designed with petroleum liquids as the baseline, the CTG estimates that a facility can realize a reduction in emissions of 69 to 98 percent.

CMA believes that the extrapolation of so many factors is inappropriate and recommends that the CTG be developed which more accurately reflects the percent reductions achievable by actual chemical facilities.

The CTG Offers Limited Flexibility in Terms of Technical Alternatives

The CTG document examines a limited number of control technologies and, in fact, fails to consider technologies such as tank insulation and submerged fill that are widely used by chemical facilities to reduce emissions. The CTG offers only one equipment standard (internal floating roofs) and only one stringent control option (98 percent control) as acceptable control technologies for 20,000 to 40,000 gallon tanks. In effect, this limited flexibility discourages the development of technically innovative control options facilities would consider

when examining compliance measures. Additional flexibility is needed since neither an internal floating roof, nor thermal combustion are realistic controls for some chemical industry systems.

The CTG also foregoes any evaluation of control options for tanks with capacities less than 20,000 gallons except for the installation of a condenser, with a required control efficiency of 90 percent. The CTG states that this was the only control option examined because most storage tanks below 20,000 gallons are horizontal tanks, and unsuitable for internal floating roofs. As stated elsewhere in our comments, many tanks with capacities below 20,000 gallons are vertical systems. While we appreciate EPA addressing an alternative technology, the CTG as written does not consider the condenser acceptable RACT. By promoting the use of condensers in these tanks, the designated 98 percent control level will not be achieved. In addition, CMA believes the 90 percent control level is presumptive. EPA should acknowledge that condensers operate at a range of control levels dependent on the system.

Further, many facilities are currently examining control measures which will achieve a 90-95 percent control rate of VOC emissions. However, due to the lack of flexibility in control options implied by the CTG document, such alternative control efficiencies will be by-passed by facilities because they could, in fact, be viewed as improper controls by the EPA.

Internal floating roof control levels are also extremely dependent on the system in which they operate. One control level does not adequately address the possible range of controls available with an internal floating roof. Throughout the CTG, a general equation must have been used to calculate the control efficiency of internal floating roofs for control of VOL's. That equation should be made part of the CTG. CMA recommends that facilities be allowed to utilize the equation to analyze the control efficiency of an internal floating roof on their systems. The CTG should then allow the facility to meet or exceed that control efficiency in a manner most suitable for the facility. Therefore, a facility may use maximum flexibility to reasonably control emissions in an effective, cost-effective manner.

The CTG Does Not Adequately Address the Interface Between RACT and MACT Standards

CMA is concerned that RACT regulations will be required without consideration for maximum achievable control technology (MACT) standards which may apply to the same facility. The two sets of standards could potentially create duplicative, possibly inconsistent, regulations under the one regime. The inconsistency which may result could create difficulties in administration and enforcement, including overlapping requirements, unclear jurisdiction and general confusion. This problem could be further exacerbated because of different enforcement authorities and different administrative implementation programs.

Both standards are clearly defined in the statute, with RACT not being more stringent than MACT. We believe that facilities which have complied with MACT should be deemed in compliance for purposes of RACT. CMA urges authorities to be careful in their establishment and designation of RACT standards and remain cognizant of the possibility which exists for RACT, in effect, from becoming MACT.

I thank the committee for the opportunity to testify on behalf of CMA. We are willing to offer assistance to EPA in its development of the CTG and look forward to working with the Agency. At this point I would be glad to answer any questions.

C: DISCUSSION

Following the presentations by the EPA, Chemical Manufacturers Association, and Conservatek, Mr. Bruce Jordan opened the floor to questions and comments from the NAPCTAC members. The short discussion following the presentations and responses to questions are summarized in the following paragraphs.

Ms. McIntire asked if tanks with volumes less than 40,000 gallons would be controlled by RACT. Ms. Susan Wyatt of CPB/EPA responded that the Agency was still examining possible volume and vapor pressure cutoff points to determine the applicability of RACT.

Ms. McIntire also asked what emission reduction and cost effectiveness was being assigned to IFRs. Mr. Morris responded that while the emissions reductions vary, typically IFRs are about 95% effective in reducing emissions from fixed-roof tanks. Also while the cost effectiveness would vary, about $300 - $400 per megagram was typical for controlling fixed roof tank, with the installation of an IFR.

Mr. Taranto asked if RACT would be required equipment. Mr. Morris stated that RACT would be based on requiring specific equipment, but that RACT would allow for equivalent equipment and would also allow for vapor control systems that are 95% effective in reducing emissions.

Mr. Dennision agreed that RACT should be required equipment, but suggested that EPA consider bifurcating RACT based on industry type (i.e., chemical industry and petroleum industry)

Ms. McIntire commented that while her company (Eastman Chemicals) has numerous tanks, they do not use IFRs. She had discussed control of tanks with company personnel, and they agreed that requiring IFRs was appropriate if an allowance for alternative control techniques was a specific component of RACT. Mr. Morris responded that in all cases RACT would allow for vapor control devices to be substituted for the installation of the IFR.

D. CORRESPONDENCE

Mark Morris

M I 11-21
11/15/91

PETREX Inc.

2349 Dorcon Road • P. O. Box 907 • Warren, Pennsylvania 16365
Telephone 814-723-2050 • Telefax 814-723-2055 • Telex 510 101 3005

November 12, 1991

United States Environmental Protection Agency
Office of Air Quality Planning and Standards
Research Triangle Park, NC 27711

Attention: Mr. Bruce C. Jordan
Director
Emission Standards Division

Subject: NAPCTAC Meeting Novembr 19-21, 1991
CTG for Volatile Organic Liquids

Gentlemen:

This letter transmits our comments to the draft CTG for volatile organic liquid.

Our firm has been in the business of designing, manufacturing and installing internal floating roofs for nineteen years. The contributors of these comments have at least 30 years experience each in the tank, floating roof and seal industry.

We think the CTG is well written and covers its topic well. There are however certain paragraphs and figures that we recommend be changed. We desire that the CTG fairly represent the current state of the art, and government regulation and be technically correct. We also believe that the document should be as generic as possible. Some of our comments are merely editorial.

These comments have also been given to the API Committee on Evaporation Loss Measurement.

We expect to attend the session on November 21, 1991, regarding the subject CTG.

Very truly yours,

PETREX, Inc.

W L Wagner

W. L. Wagner, P.E.
President

WLW/br

P.S. If you have questions please call me or Bill Blumquist.

PETREX Inc.

2349 Dorcon Road • P. O. Box 907 • Warren, Pennsylvania 16365
Telephone 814-723-2050 • Telefax 814-723-2055 • Telex 510 101 3005

November 7, 1991

Subject: USEPA
Control Technique Guideline
"Control of V.O.C. Emissions from V.O.L.
Storage in Floating and Fixed Roof Tanks"

Our comments on this document are as follows:

Page 2-3 Para 2.2.3	Aluminum sandwich panel contact type internal floating roofs do not share the design feature of having a mechanical seam consisting of overlapping alumium sheets bolted together with clamping bars. Evaporation loss tests, made and submitted to API, on a mechanical seal consisting of a gasket cast in place between two mating extrusions show a much lower seam loss.
Pg. 2-4 Para. 2.2.3	Is it common practice to use P/V vents and flame arrestors to ventilate an IFR tank?
Pg. 2-4 Para. 2.2.4	Horizontal tanks, above or below ground, should be referred to and eliminated from discussion. Delete comments on composition, proportions, etc. Delete illustrations Fig. 2-5 and Fig. 2-6.
Pg. 2-5 Para. 2.3.1	Wiper type seals are also used on EFR's. Add to description and Fig. 2-7.
Pg. 2-5 Para. 2.3	The discussion and illustrations concerning EFR tank seals should be limited to mechanical shoe seals, liquid mounted seals, vapor mounted seals and secondary seals. The use of a vapor mounted seal with a weather shield is not permitted and should not be shown. No wiper type primary seals are shown.
Pg. 2-6 Para. 2.3.1.1	The height of the mechanical shoe seal is not specified in various EPA standards, such as in the Federal Register, 40 CFR Part 60 Subpart Y Paragraph 61.271 (a) (1) (iii) and 40 CFR Part 60 Subpart Kb, Paragraph 60.1126 (a) (1) (ii) (C). This is not definitive since the term "mechanical shoe seal" alone does not guarantee the performance desired. The basis, we believe for the mechanical shoe seal emissions is a test conducted some years ago by CBI in California using a 30 inch plus shoe. Shoes of lesser length could not provide the same emission but could still qualify as a mechanical seal. API 2519 equates a mechanical shoe seal to a liquid mounted seal but with no limits to shoe length. Later in this document Pg. 7-6, Para. 7.5 shoe height is mentioned.

Pg. 2-7 Para. 2.3.1.4	It is highly doubtful that the "wiping action" of a secondary seal aids in reducing evaporation loss. Any "wiped" liquid would be above the primary seal.
Pg. 2-7 Para. 2.3.1.4	A shoe mounted seal extending from the top of the shoe to the tank shell is <u>not</u> a secondary seal. This and Fig. 2-9 are wrong. See definition Pg. 2-6, Para. 2.3.1.4.
Pg. 2-7 Para. 2.3.1.4	This implies that a weather shield may be used over a secondary seal. A more common practice is to combine the functions of secondary seal and a weather shield.
Pg. 2-8 Para. 2.3.2.1	Reference is made to Fig. 2-10 b. This would be better illustrated if the liquid level were shown.
Pg. 2-9 Para. 2.3.2.2	In the comments on a shingle type seal the language is misleading. If a shingle type construction does not provide a continuous vapor barrier (as used in weather shields) then it should not be considered a wiper <u>seal</u>.
Pg. 2-9 Para. 2.3.2.2	Wiper seals using a "blade" construction should not only be joined but sealed. Simple, mechanical joining may not be vapor tight.
Pg. 2-9 Para. 2.3.2.3	Current EPA regulations require the use of a single, liquid mounted seal or a vapor mounted primary seal plus a secondary seal. The description in this paragraph and the illustrations in Fig. 2-10 and 2-11 do not reflect this requirement.
Pg. 2-9 Para. 2.3.2.3	The statement "Secondary seals are not commonly used on IFR tanks", is wrong.
Pg. 2-11 Para. 2.4.1.5	The primary purpose of an IFR vent or as described, "Vacuum Breaker" is to vent incoming or outgoing air or vapor through the IFR when filling or emptying. The poppet type described and illustrated is strictly mechanical. Other types operating on pressure/vacuum or liquid level are also used.
Pg. 2-13 Para. 2.4.1.8	Why is the trapped vapor space under a mechanical shoe seal ventilated and not the vapor space under any other type of vapor mounted seal?
Pg. 2-13 Para. 2.4.2.1	Reference to Fig 2-3 is wrong.
Pg. 3-1 Para. 3.1 and 3.2	These are a recapitulation of AP 42 Para. 4.3 and API 2519 and seem unnecessary.

PETRE,

Pg. 3-29 Para 3.3	This is an excellent summary of regulations.
Pg. 3-32 Para. 3.3.5	Some reference shold be made to support Subpart Kb, as it is often referred to as such.
Pg. 3-33 Para. 3.3.6	Reference to the baseline control method as being a low cost, non-contact IFR is wrong. Depending on the diameter a non-contact IFR may cost more. Also the use of a single vapor mounted seal is not permitted.
Pg. 3-34 Para. 3.4	It may be "picky" but when referring to RVP and then "vapor pressure", TVP should be used.
Pg. 4-5 Para. 4.3	What is the basis for an IFR installation in a fixed roof tank having an emission reduction of only 69%?
Pg. 4-5 Para. 4.3	What establishes the non-contact, bolted aluminum IFR as the most basic? Why is the use of a single vapor mounted seal mentioned when it is not permitted?
Pg. 4-17 Para 4.6.2 and 4.6.3	When retrofitting any IFR with liquid mounted or secondary seals additional buoyancy and storage loss must be considered. This may be especially important with non-contact IFR's.
Pg. 4-18 Para. 4.7	Obviously, emissions from liquid stored in a fiberglass fixed roof tank could be controlled by the use of a fiberglass IFR.
Pg. 5-3 5.2.1	This discussion on the relative effect of turnover Para. rate and emissions from fixed roof tank vs. IFR tanks ignores the same relative effect of breathing losses.
Pg. 5-5 Para. 5.3	This states that the control options for <u>IFR</u> tanks are to install <u>IFR</u>'s??
Pg. 5-6 Para. 5.3.2.1	In considering the secondary impact emissions when emptying, cleaning and degassing an IFR tank a large source of emissions has been ignored. The large volume of hydrocarbon saturated trapped vapor under a non-contact IFR makes a large contribution.
Pg. 5-7 Para. 5.4.2.1	To suggest that a secondary seal may be added to an existing EFR tank with the tank in service may be misleading economically and safety wise. Not all such floating roofs have a readily available flange to which a secondary seal can be bolted. Many company safety rules will not permit such work.

PETREX

Pg. 6-3
Para. 6.2 — Using 10 years as expected equipment life may be inaccurate.

Pg. 7-3
Para. 7.2 — A vapor mounted seal does not have to be foam filled.

Pg. 7-4
Para. 7.5 — In this paragraph the seal gap criteria appear only following the paragraph concerning testing for EFR tanks. Is the intent to have these criteria apply only to EFR tanks?

Pg. 7-6
Para. 7.5 — No holes, tears or other openings in the shoe, seal fabric or seal envelope is an absolute statement. Can this be quantified as in the gap criteria stated above?

General commment: Table 4-1, Pg. 4-2 lists Control Options 1 through 6, later reference in Para 5.2, Pg. 5-1 is to Control Options 1 through 5. Description of these control options in Table 4-1, Pg. 4-2 mentions contact or non-contact for the first four options (2-5) and no mention of this for Option 6. Later on Pg. 5-21, Table 5-1 Control Option V (most effective) is described as a contact type IFR.

General comment: Reading the information presented in Table 3-2, Pg. 3-7; Table 4-2, Pg. 4-3; Table 4-6, Pg. 4-13 and the general discussion on EFR tanks and gap criteria in Para. 7-5, Pgs. 7-5, 7-6 and 7-7 leaves the reader confused about the use of mechanical shoe seals in riveted tanks. Is it common practice? Is it acceptable? What are emissions?

We will be pleased to discuss these comments with you.

PETREX

State of Wisconsin \ DEPARTMENT OF NATURAL RESOURCES

WISCONSIN
DEPT. OF NATURAL RESOURCES

Carroll D. Besadny
Secretary

101 South Webster Street
P.O. Box 7921
Madison, Wisconsin 53707-7921
TELEPHONE 608-266-2621
TELEFAX608-267-3579
TDD 608-267-6897

November 14, 1991

IN REPLY REFER TO: 4530

Bruce C. Jordan, Director
Emissions Standards Division (MD-13)
Office of Air Quality Planning and Standards
U.S. Environmental Protection Agency
Research Triangle Park, NC 27711

SUBJECT: Comments For Draft CTG Document Control of Volatile Organic Compound Emissions from Batch Processes

Dear Mr. Jordan:

My name is Steve Jorgensen, and I am an environmental engineer with the Wisconsin Dept. of Natural Resources, Bureau of Air Management. I've skimmed over the draft CTG document entitled "Control of Volatile Organic Compound Emissions from Batch Processes". As a result, I have several comments concerning Chapter 6 and Appendix F, and will address them in chronological order.

Section 6.3.3.1 Single Stream Versus Aggregation.

Sentence 1 of paragraph 2 reads, ... and 3/4 of the maximum flow rates from each process vent would be used as the maximum instantaneous flow rate.

Question: Can the reasoning behind using this ratio (3/4) be included in paragraph 2? What about using the ratio of 1/1? Such a ratio would take into account the true maximum (possible) instantaneous flow rate.

Section 6.4.1 Industries Covered

Emissions with durations of under 7,800 hours per year, for the applicable SIC Codes, are assumed to be the result of batch processes. Model batch processes described in Tables 6-7 through 6-10, however, set a plant operation limit of 275 days per year (24 hour operation per day for 275 days corresponds to 6600 hours per year).

Question: Can the reasoning for this apparent difference in bases be included in the section?

Section 6.4.3 Baseline Assumptions/Extrapolations

Question: What is the exact definition of baseline emissions?

My interpretation from this section is that it represents the remaining uncontrolled emissions from SIC Code 2834 (pharmaceutical preparations) batch processes after pharmaceutical CTG controls have been applied. Section 6.4.4, paragraph 2, sentence 3, however, suggests to me that baseline emissions include (in addition to those described above) the uncontrolled emissions from the other 6 applicable SIC Codes.

Section 6.4.4 Reductions

The notation used to describe RACT options here appears to be incomplete. In addition to Roman numerals and capital letters, numbers have been included elsewhere. For Example, the first RACT option listed in Table 6-1 is: IA.1,5,9.

Question: What is the significance of the numbers used in the RACT option descriptions?

My remaining comments for Chapter 6 and Appendix F are addressed on enclosed copies of Figure 6-1; Tables 6-1,3,11, and 16; and page F-1.

The material covered in Section 6.4.2 through the end of the chapter (including many of the figures and tables) was very difficult for me to follow. I still don't understand the RACT VOC options that are being proposed, or their associated costs. For these reasons, I cannot make an overall comment on the validity of the CTG document.

For your information, I have included the number of known facilities by applicable SIC Code in Wisconsin. These facilities, located in non-marginal nonattainment areas, are listed below.

SIC Code	No. of Facilities
2821	9
2834	11
2851	18
2861	2
2865	5
2869	3
2879	7

A breakdown of plant size (by employee number as in Table 6-15) would be available upon request. [Note: The total number of facilities in Wisconsin within each SIC Code category is slightly larger. In addition, Wisconsin uses RACT guidelines to set VOC limits statewide; exemptions to these limits are available for specific circumstances.]

Sincerely,

Steven M. Jorgensen

Steven M. Jorgensen, Engineer
Compliance Section
Bureau of Air Management
Wisconsin Dept. of Natural Resources

cc: Dean Packard AM/10
Jon Heinrich - AM/10
Dale Ziege AM/10

Enclosures: Figure 6-1; Tables 6-1,3,11, and 16; and p. F-1

Note: Tables and figures should be able to stand on their own. Chapter 6 written material needs to be referenced often to interpret the above. Also, adding lines unless the TS and FS are more readable.

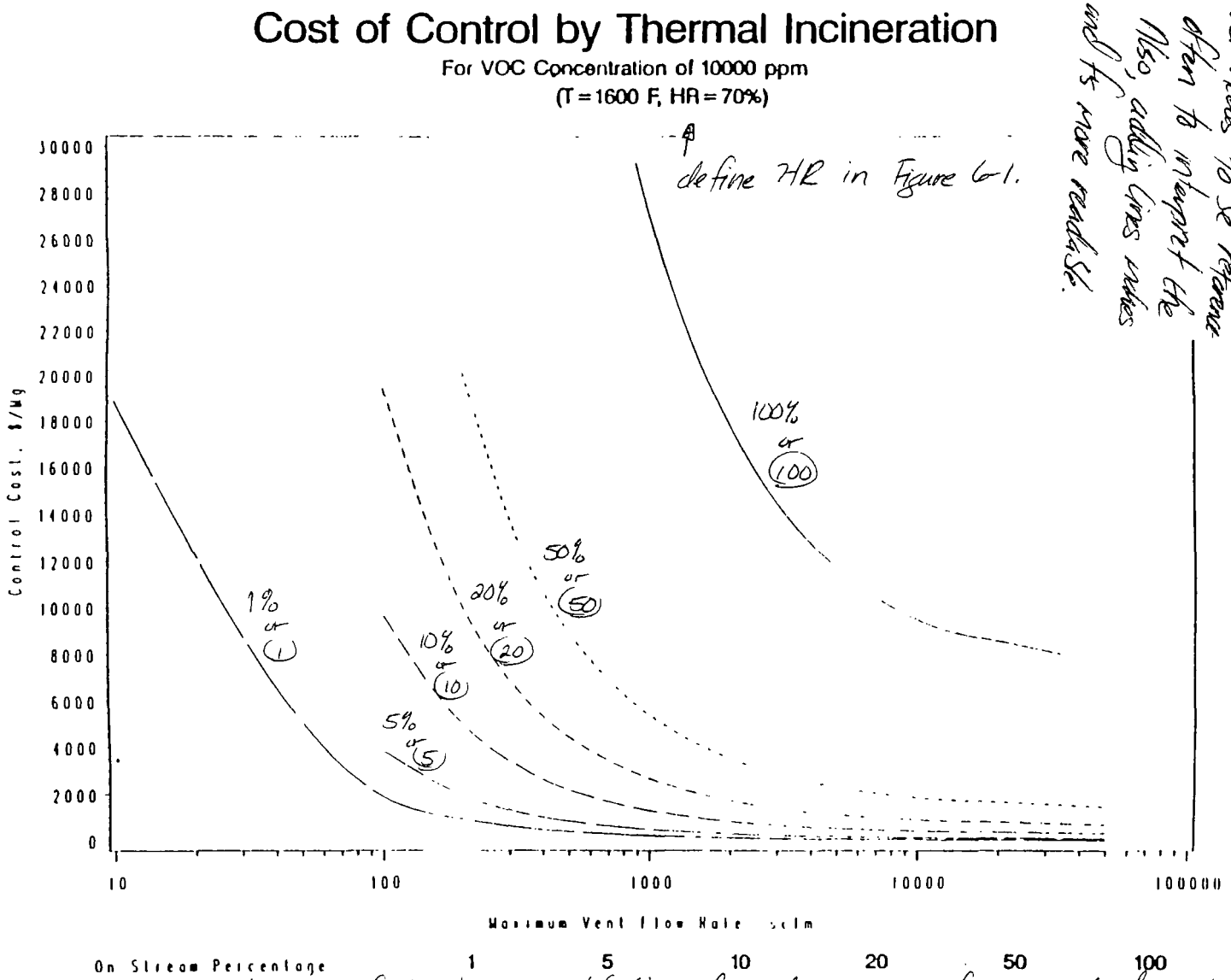

An alternative would be to use solid lines for all curves, and ~~either~~ label each curve with a number either as a "%" or "circled" (ie. 1% or ①).

Figure 6-1. Dependence of control device cost on emission intermittency

Table 6-1. Summary of RACT option exemptions

RACT OPTION/ VOLATILITY LEVEL (CONTROL EFFICIENCY)	EXEMPTIONS for all levels of volatility
IA.1,5,9 (98%)	LOW VOLATILITY SOLVENTS: if MF < 10,000 lbs/yr – NO CONTROL if MF >= 10,000 lbs/yr AND FR >= (MF*0.1508)-1308 – NO CONTROL MODERATE VOLATILITY SOLVENTS: if MF < 10,000 lbs/yr – NO CONTROL if MF >= 10,000 lbs/yr AND FR >= (MF*0.1062)-961.5 – NO CONTROL HIGH VOLATILITY SOLVENTS: if MF < 10,000 lbs/yr – NO CONTROL if MF >= 10,000 lbs/yr AND FR >= (MF*0.075)-100 – NO CONTROL
IA.2,6,10 (98%)	LOW VOLATILITY SOLVENTS: if MF < 10,000 lbs/yr – NO CONTROL if MF >= 10,000 lbs/yr AND FR >= (MF*0.1537)-1527 – NO CONTROL MODERATE VOLATILITY SOLVENTS: if MF < 10,000 lbs/yr – NO CONTROL if MF >= 10,000 lbs/yr AND FR >= (MF*0.0636)-772.7 – NO CONTROL HIGH VOLATILITY SOLVENTS: if MF < 10,000 lbs/yr – NO CONTROL if MF >= 10,000 lbs/yr AND FR >= (MF*0.055)-450 – NO CONTROL
IA.3,7,11 (98%)	LOW VOLATILITY SOLVENTS: if MF < 10,000 lbs/yr – NO CONTROL if MF >= 10,000 lbs/yr AND FR >= (MF*0.0855)-1409 – NO CONTROL MODERATE VOLATILITY SOLVENTS: if MF < 10,000 lbs/yr – NO CONTROL if MF >= 10,000 lbs/yr AND FR >= (MF*0.0491)-881.8 – NO CONTROL HIGH VOLATILITY SOLVENTS: if MF < 10,000 lbs/yr – NO CONTROL if MF >= 10,000 lbs/yr AND FR >= (MF*0.044)-100 – NO CONTROL
IA.4,9,12 (98%)	LOW VOLATILITY SOLVENTS: if MF < 10,000 lbs/yr – NO CONTROL if MF >= 10,000 lbs/yr AND FR >= (MF*0.0475)-1563 – NO CONTROL MODERATE VOLATILITY SOLVENTS: if MF < 10,000 lbs/yr – NO CONTROL if MF >= 10,000 lbs/yr AND FR >= (MF*0.0248)-856.3 – NO CONTROL HIGH VOLATILITY SOLVENTS: if MF < 10,000 lbs/yr – NO CONTROL if MF >= 10,000 lbs/yr AND FR >= (MF*0.017)-10 – NO CONTROL

The RACT options, MF and FR should be defined on the bottom of the last page of Table 6-1.

Table 6-2. Percentage of emissions from batch processes

SIC CODE	SIC DESCRIPTION	<7800 (hrs/yr)	>0 (hrs/yr)	% BATCH
2821	Plastics materials and resins	14,396	124,547	12%
2834	Pharmaceutical preparations	8,432	15,459	55%
2851	Paints and allied products	6,006	11,998	50%
2861	Gum and wood chemicals	2,287	20,415	11%
2865	Cyclic crudes and intermediates	223	8,365	3%
2869	Industrial organic chemicals	17,060	173,167	10%
2879	Agricultural chemicals	92	3,912	2%

NOTE: Emissions data was obtained from AIRS facility subset data base search

Tables 6-7 → 6-8 (Model plant assumptions) set plant operations at 275 days per year; this would amount to at most 6600 hrs per year

← Center in larger letters on top or bottom of page.

Table 6-3. Emission stream characteristics for solvent reaction model process w/ atmospheric dryer

# of unit ops per model batch	Calculation for 1 unit operation	Emission Stream VOC	Flow Rate (acfm)	Temp. (Deg C)	Duration (min)	VOC (vol %)	Emissions lb/event	Emissions lbs/batch (Note 1)	NO CONTROL Mass Flux lbs/batch	CPC (Note 2) Mass Flux lbs/batch
9.25	Displacement	LOW VOLATILITY	18	20	15	0.6%	0.29	2.64	2.64	2.64
	(2000-gallon vessel)	MODERATE VOLATILITY	18	20	15	12.6%	2.82	26.08	26.08	7.82
		HIGH VOLATILITY	18	20	15	57.9%	30.02	277.66	277.66	30.54
	TOTAL DISPLACEMENT EMISSIONS	LOW VOLATILITY							727.02	727.02
	(lbs-batch/year)	MODERATE VOLATILITY							7172.28	2151.68
		HIGH VOLATILITY							76355.65	8399.12
	REACTORS									
1	Charging w/purge	LOW VOLATILITY	30	20	15	0.1%	0.12	0.12	0.12	0.12
		MODERATE VOLATILITY	30	20	15	3.1%	1.17	1.17	1.17	1.17
		HIGH VOLATILITY	30	20	15	14.5%	12.51	12.51	12.51	5.63
1	Heat-up w/purge	LOW VOLATILITY	30	20 to 30	5		0.1	0.10	0.10	0.10
		MODERATE VOLATILITY	30	20 to 30	5		0.52	0.52	0.52	0.52
		HIGH VOLATILITY	30	20 to 30	5		5.13	5.13	5.13	1.85
1	Reaction w/purge	LOW VOLATILITY	150	37	3	0.5%	0.39	0.39	0.39	0.39
		MODERATE VOLATILITY	150	37	3	7.5%	2.65	2.65	2.65	1.35
		HIGH VOLATILITY	150	37	3	27.2%	22.19	22.19	22.19	5.33
1	Empty Reactor Purging	LOW VOLATILITY	100	20	1	0.1%	0.06	0.06	0.06	0.06
		MODERATE VOLATILITY	100	20	1	2.7%	0.5	0.50	0.50	0.32
		HIGH VOLATILITY	100	20	1	12.8%	1.5	1.50	1.50	1.26
	TOTAL REACTOR EMISSIONS	LOW VOLATILITY							184.08	184.08
	(lbs-batch/year)	MODERATE VOLATILITY							1332.65	925.91
		HIGH VOLATILITY							11365.50	3866.79

Please define the following on the bottom of the last pages of Tables 6-3 → 6-6.

1. # of unit ops per model batch (Question: How can you have a fraction here? 9.25 appears at the top of the page.)
2. the three levels of volatility
3. the CPC criteria (they are listed in Tables 6-11 → 6-14.)

Table 6-11. Solvent reaction model plant w/ atmospheric dryer

MODEL PLANT EMISSIONS(lbs/yr)		
	SMALL/NC	SMALL/CPC
LOW VOLATILITY	333,236	36,236
MODERATE VOLATILITY	361,350	44,621
HIGH VOLATILITY	749,367	86,603
	MEDIUM/NC	MEDIUM/CPC
LOW VOLATILITY	1,109,676	120,666
MODERATE VOLATILITY	1,203,296	148,590
HIGH VOLATILITY	2,495,393	288,388
	LARGE/NC	LARGE/CPC
LOW VOLATILITY	3,332,360	362,360
MODERATE VOLATILITY	3,613,502	446,215
HIGH VOLATILITY	7,493,673	866,031

MODEL PLANT EMISSIONS(tons/yr)		
	SMALL/NC	SMALL/CPC
LOW VOLATILITY	166.62	18.12
MODERATE VOLATILITY	180.68	22.31
HIGH VOLATILITY	374.68	43.30
	MEDIUM/NC	MEDIUM/CPC
LOW VOLATILITY	554.84	60.33
MODERATE VOLATILITY	601.65	74.29
HIGH VOLATILITY	1247.70	144.19
	LARGE/NC	LARGE/CPC
LOW VOLATILITY	1666.18	181.18
MODERATE VOLATILITY	1806.75	223.11
HIGH VOLATILITY	3746.84	433.02

NC = No Control
CPC = Current Pharmaceutical Control

1. For surface condensers on sources emitting:
   -25C for VP>300mmHg
   -15C for 150<VP<300mmHg
   -0C for 77.5<VP<150mmHg
   10C for 52<VP<77.5mmHg
   25C for 26<VP<52mmHg
2. Air dryers emitting over 330 lbs/day controlled to 90%
3. Air dryers emitting <330 lbs/day only allowed to emit 33 lbs/day

Please define the following on the bottom of Tables 6-11 → 6-14:
1. the three levels of volatility
2. the three (sizes of) model plants

Table 6-16. RACT Options

Lower in large letters across the top of the page.

Raise first line of each column heading to this level

	A	B	C	D	E	F	G	H	I	J	K
	OPTION	DESCRIPTION OF OPTION	UNCONTROLLED EMISSIONS (Mg/yr) a	BASELINE EMISSIONS (Mg/yr) b	NATIONWIDE EMISSION REDUCTION FROM NO CONTROL (Mg/yr) c	NATIONWIDE EMISSION REDUCTION FROM BASELINE (Mg/yr)* d	% REDUCTION FROM NO CONTROL	% REDUCTION FROM BASELINE	NATIONAL COST FOR BASELINE ($) e	AVERAGE COST EFFECTIVENESS FOR BASELINE ($/Mg) f ***	PERCENT OF STREAMS CONTROLLED (%)
	AGGREGATED PROCESS VENTS WITH PRESSURE TESTING AND WITHOUT MODEL PLANT 4**										
1	IIA.4,8,12	98% control of aggregated process vents that are not exempt per IIA.4,8,12	187,034	69,572	181,339	55,519	97%	80%	$339,006,385	$6,106	75%
2	IIB.4,8,12	90% control of aggregated process vents that are not exempt per IIB.4,8,12	187,034	69,572	174,422	53,601	93%	77%	$94,423,029	$1,768	75%
3	IIC.4,8,12	95% control of aggregated process vents that are not exempt per IIC.4,8,12	187,034	69,572	178,745	54,724	96%	79%	$333,752,982	$6,099	75%
	INDIVIDUAL PROCESS VENTS WITH PRESSURE TESTING AND WITHOUT MODEL PLANT 4										
4	IA.4,8,12	98% control of individual process vents that are not exempt per IA.4,8,12	187,034	69,572	133,322	40,818	71%	59%	$362,957,207	$8,892	8%
5	IB.4,8,12	90% control of individual process vents that are not exempt per IB.4,8,12	187,034	69,572	128,494	39,339	69%	57%	$94,911,746	$2,413	8%
6	IC.4,8,12	95% control of individual process vents that are not exempt per IC.4,8,12	187,034	69,572	131,728	40,330	70%	58%	$343,798,449	$8,525	8%
	AGGREGATED PROCESS VENTS WITH PRESSURE TESTING AND MODEL PLANT 4										
7	IIB.4,8,12	90% control of aggregated process vents that are not exempt per IIB.4,8,12	221,256	103,794	202,476	83,719	92%	81%	$156,519,343	$1,870	60%
	PRESSURE TESTING ALONE WITH MODEL PLANT 4										
8	PT2	Option of installing a pressure testing program	7,489	7,489	6,886	6,886	92%	92%	$12,997,042	$1,887	N/A

Column d"

* Nationwide emission reduction from baseline, Column F, was calculated using the following formula:
F = (D-12,310)*(E/C) for Rows 1-7
This formula does not allow the residual emissions from pharmaceutical facilities (emissions after pharmaceutical CTG is applied), 12,310 Mg/yr, to be further reduced by applying the RACT option to these emissions.
** Model plant 4 represents paint and varnish manufacturers

Use it capital letters here so confused with RACT option descriptions.

d = (b-12,310) * (c/a)

*** Average cost effectiveness for baseline, column f, was calculated from the following formula: f = (e/d)

Please define the following on this page:

1. RACT option descriptions (ie. Roman numerals, capital letters, and numbers)
2. Uncontrolled emissions
3. Baseline emissions

MASS FLUX = 10000 lbs/yr

LOW VOLATILITY (Toluene), CCE = 98%

define level (i.e. low, moderate, and high) of volatility on each page.

define CCE

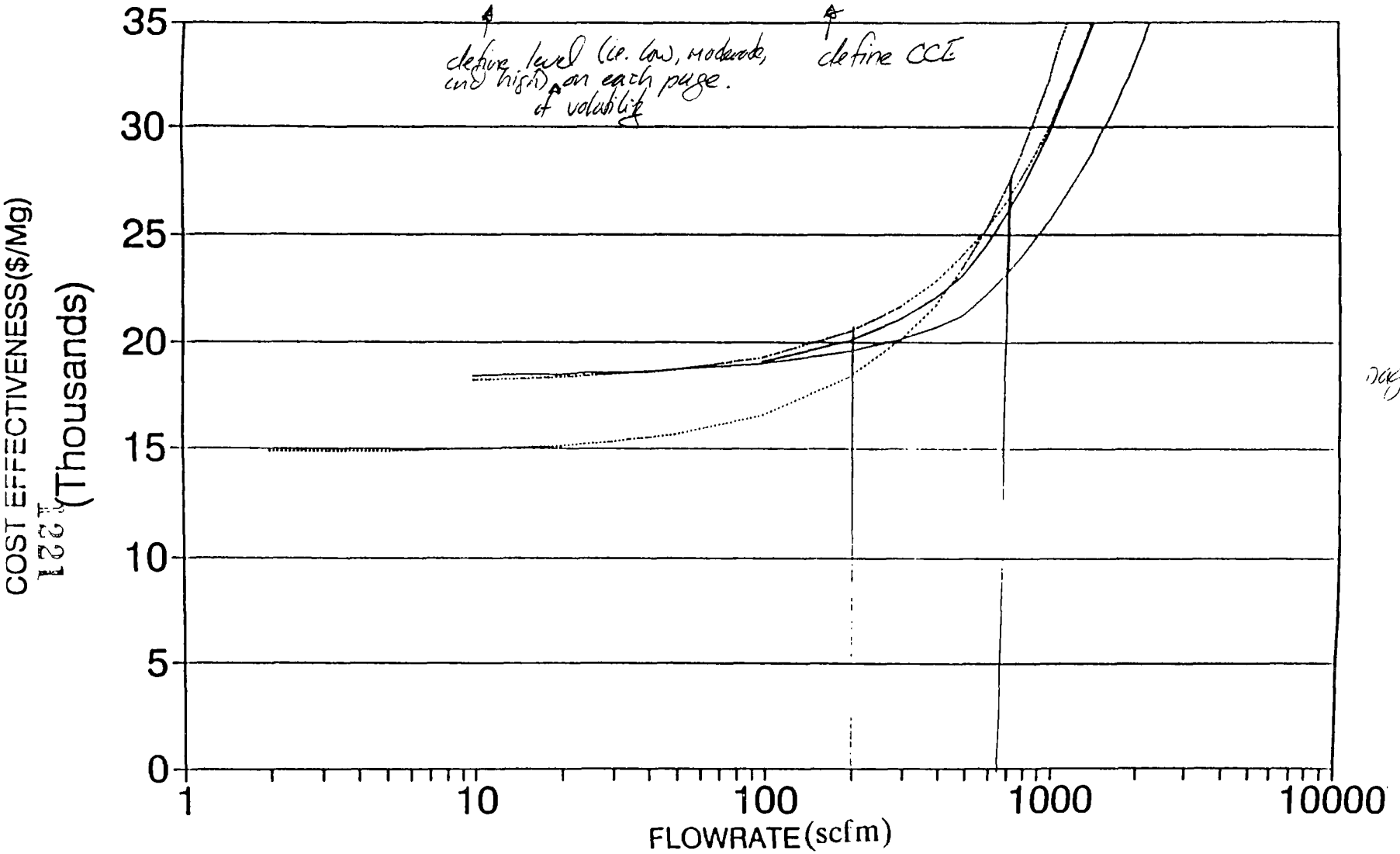

page F-1

Alternative:
Use symbols on solid lines (ie O, Δ, x and □).

T1000ppmv — T8750ppmv ····· C10000ppmv ····· C100000ppmv

Figures B-1 → B-5 use such symbols

L/I
11/18/91

American Petroleum Institute
1220 L Street, Northwest
Washington, D.C. 20005
202-682-8145

James K. Walters
Director, Measurement Coordination

November 18, 1991
RE: 300

Mr. Bruce C. Jordan
Director, Emission Standards Division
U.S. Environmental Protection Agency
Office of Air Quality Planning and Standards
Research Triangle Park, North Carolina 27711

Dear Mr. Jordan:

Attached please find the comments of the American Petroleum Institute (API) on the draft EPA Control Technique Guideline, "Control of Volatile Organic Compound Emissions from Volatile Organic Liquid Storage in Floating and Fixed Roof Tanks", as requested in your letter dated October 4, 1991.

API requests that these comments be included as part of the official record of the EPA National Air Pollution Control Techniques Advisory Committee meeting being held on November 19-21, 1991.

If you have any questions on these comments, please contact me.

Very truly yours,

Attachment

cc: CELM Members
D. Wolter, D. Arrick
Internal Mailing List

An equal opportunity employer

COMMENTS OF THE AMERICAN PETROLEUM INSTITUTE
ON
THE UNITED STATES ENVIRONMENTAL PROTECTION AGENCY
DRAFT CONTROL TECHNIQUE GUIDELINE

"CONTROL OF VOLATILE ORGANIC COMPOUND EMISSIONS FROM
VOLATILE ORGANIC LIQUID STORAGE IN
FLOATING AND FIXED ROOF TANKS"

NOVEMBER 18, 1991

INTRODUCTION

The American Petroleum Institute (API) is pleased to comment on the EPA's draft Control Technique Guideline, "Control of Volatile Organic Compound Emissions from Volatile Organic Liquid Storage in Floating and Fixed Roof Tanks" (herein referred to as the "CTG"). API represents over 250 companies involved in all aspects of the oil and gas industry, including exploration, production, transportation, refining and marketing.

The EPA is to be commended on its preparation of the draft CTG. The document is very comprehensive and many of the issues mentioned herein are complex. In order to thoroughly address API's comments, API requests that a meeting with EPA be arranged, as provided for in EPA's October 4, 1991 letter.

Also, API requests that the EPA strongly consider delaying the publication of the CTG until the results of EPA's "114" letter on tankage distributed to eight companies during the third quarter of 1991 and the API fittings loss tests are available. These results could indicate that revisions are needed to the draft CTG. If EPA must publish the CTG prior to receiving the results, then EPA should be prepared to discuss (at the meeting mentioned above) ways to incorporate the results into the CTG.

The API comments below are divided into General Comments and Specific Comments (identified by section and page number).

GENERAL COMMENTS

1. API is pleased that the draft CTG has incorporated many of API's previous comments and refers to and makes use of data, analysis and standards developed by API. API would like to point out that the new API Publication 2518, "Evaporative Loss from Fixed-Roof Tanks" is now available and a copy is included for EPA use. This new document should be considered by EPA during the revisions of both the CTG and AP-42 for calculations dealing with fixed roof tanks.

2. Most of the November 1983 API comments on the current CTG have been incorporated into the 1991 draft CTG except the omission of self-supporting fixed roofs. The CTG should recognize the retrofit of an external floating roof tank with a self-supporting fixed roof as an equipment option. This point is discussed throughout the comments.

3. API recommends that, in light of the secondary waste generation, emissions, safety and cost impacts, it is important to maintain the flexibility to perform seal upgrades at the next scheduled tank maintenance period.

4. The effective dates for a few of the references to Subpart K are incorrect. The correct effective dates are shown in the appropriate Specific Comments sections.

5. The draft CTG does not mention the exemption for tanks at drilling or production facilities which are used prior to custody transfer. Also, there is no mention of the inspection requirements for the roof seals, gaskets and membranes in all regulated internal and external floating roof tanks.

6. The hierarchies suggested in Section 4.0, Control Techniques, are overly simplified. There is apparently an assumption that the fittings scenario does not change appreciably across the country. In actual practice, fittings options vary significantly and differences in fittings scenarios could change the order of hierarchy. Notable examples are the presence or absence of support columns for an internal floating roof tank and slotted gauge poles for an external floating roof tank. API Publications 2517 and 2519 discuss typical fittings scenarios. Further information on this is shown in Section 4.0 of the Specific Comments.

7. In Section 6.0, the CTG should mention the time frame of the cost estimates and how an adjustment for inflation (1991 dollars) is to be handled. Also, the cost effectiveness data is shown as being calculated in dollars/megagram but it is really dollars/megagram/year annualized over ten years. This is misleading and should be clarified.

8. In Section 6.2, pg 6-2, API suggests the CTG be corrected to show the following referenced cost data. The retrofit cost from CTG Reference 2 lists the price difference for internal floating roof seals, liquid mounted vs. vapor mounted as $20 to $40 per linear foot as opposed to $20 as stated in the CTG from Reference 1.

   The data from Reference 2 indicates the retrofit cost of controlling internal floating roof fittings is greater than $10,000 per tank, not the $600 stated in the CTG.

   The installed cost of secondary seals is between $49 per foot and $90 per foot according to Reference 2, as opposed to the $14 per foot stated. Some operating plant data indicates that $90 per foot cost is more representative.

The retrofit cost to control the guide-pole fitting on an external floating roof tank is $2604 to $3324 according to Reference 2, not $680 as in the CTG.

Considering discrepancies in the input data, some of which are mentioned above, API suggests that the cost effectiveness analysis shown in Section 6.0 be evaluated more closely. API will be addressing this issue in the immediate future and would like to meet with EPA to discuss this analysis. API cannot endorse the draft cost effectiveness analysis at this time.

9. An API contractor is reviewing fitting losses with the objective to develop improved fitting factors. API invites EPA QA/QC review of the API planned test work. This information should be available in late 1992 and should provide an improved technical basis for evaluating fitting losses. It is advisable for the EPA to incorporate the resulting data into the CTG.

SPECIFIC COMMENTS BY SECTION AND PAGE NUMBER

Section 2.2.1, pg 2-1	Last sentence, delete the word "all" and change the word "prevent" to "reduce".
Section 2.2.3, pg 2-3	Add the following wording from AP-42 prior to beginning of first full paragraph. "There are two basic types of internal floating roof tanks, tanks in which the fixed roof is supported by vertical columns within the tank, and tanks with a self-supporting fixed roof and no internal support columns. Fixed roof tanks that have been retrofitted to employ a floating deck are typically of the first type, while external floating roof tanks typically have a self-supporting roof when converted to an internal floating roof tank. Tanks initially constructed with both a fixed roof and a floating deck may be of either type."
Section 2.2.3, pg 2-3	Third full paragraph, aluminum sandwich panel contact-type internal floating roofs do not share the design feature of having a mechanical seam consisting of overlapping aluminum sheets bolted together with clamping bars. Evaporation loss tests made by one tank vendor on a mechanical seal consisting of a gasket cast in place between two mating extrusions show a much lower seam loss.
Section 2.2.3, pg 2-4	Last paragraph, it is not common practice to use pressure/vacuum vents and flame arrestors to ventilate an internal floating roof tank. In fact, there is the potential to generate explosive atmospheres within the tank and may violate safety standards.

Section 2.3.1, pg 2-5	First paragraph, wiper-type seals are also used on external floating roof tanks. Add to the description and to Figure 2-7.
Section 2.3.1.1, pg 2-6	The length of the mechanical shoe seal should not be specified because there are many good quality mechanical shoe seals already installed in compliance with regulations that did not previously specify shoe length. The height of the mechanical shoe is not specified in various EPA standards, such as 40 CFR Part 60, Subpart Y, Para. 61.271 (a)(1)(iii) and 40 CFR Part 60, Subpart Kb, Para. 60.1126 (a)(1)(ii)(C). It would not be reasonable to require retrofits on tanks that had working mechanical shoe seals already in place. The basis for the mechanical shoe seal emissions is probably a test conducted some years ago by CBI in California using a 30-inch plus shoe. Shoes of lesser length could not provide the same emission but could still qualify as a mechanical seal. API Publication 2519 equates a mechanical shoe seal to a liquid-mounted seal but with no limits to shoe length. Later in the document, pg 7-6, para. 7.5, shoe height is mentioned.
Section 2.3.1.5, pg 2-7	This implies that a weather shield may be used over a secondary seal. A more common practice is to combine the functions of a secondary seal and a weather shield.
Section 2.3.2.3, pg 2-9	Current EPA regulations (Subpart Kb) require the use of a single, liquid-mounted seal or a vapor-mounted primary seal plus a secondary seal. The description in this paragraph and Figures 2-10 and 2-11 do not reflect this requirement.
Section 2.3.2.3, pg 2-9	The last sentence states "Secondary seals are not commonly used on internal floating roof tanks." This is incorrect for tanks now covered by NSPS Kb.
Section 2.4.1.5, pg 2-11	The primary purpose of an internal floating roof vent or "Vacuum Breaker" is to vent incoming or outgoing air or vapor through the internal floating roof tank when filling or emptying. The poppet-type described and illustrated is strictly mechanical. Other types operating on pressure/vacuum or liquid level are also used.
Section 2.4.1.6, pg 2-12	Fifth sentence stating: "Open drainage systems can be used only on double-deck floating roofs" is incorrect. Open drainage systems are optional on open center deck roofs and are not

	uncommon. This is also incorrectly presented in API Publication 2517 on pages 41 and 42. Page 41 states that only double-deck roofs have overflow roof drains and page 42 states that some proprietary designs are available. These two statements are contradictory.
Section 2.4.2.1, pg 2-13	First sentence, the reference to Figure 2-3 is incorrect. The correct reference is to Figure 2-1.
Figure 2-7, pg 2-21	The word "Shield" is misspelled in figures a, c and d.
Figure 2-11, pg 2-25	The word "immersed" is misspelled.
Section 2.5, pg 2-32	The reference 1 for API Publication 2518 should be changed to reflect the recent publication date of October 1991.
Section 3.1/3.2, pg 3-1	These are a recapitulation of AP 42, para. 4.3 and API 2519 and seem unnecessary.
Section 3.2.1, pg 3-1	Add a sentence after the last complete sentence on this page stating: "Alternatively, breathing losses from fixed roof tanks may be calculated using the methods described in API Publication 2518, revised October 1991."
Section 3.2.1, pg 3-2	Equation (3-2) should be changed to agree with the revised equation in the new API 2518.
Section 3.2.1, pg 3-2	In description of "P", change "atmospheric" to "absolute".
Table 3-1, pg 3-3	The paint factor condition for medium gray on the shell and roof is listed as 1.40 for good paint and 1.58 for poor paint. API Publication 2518, First Edition, lists 1.46 for good paint. This typographical error should be corrected.
Section 3.2.2, pg 3-4	API does not have a method for estimating evaporative losses from horizontal tanks and cannot endorse the EPA method in the CTG. However, based on the comments below and using the suggested changes, the EPA method may constitute a rough or screening mechanism. The user is referred to emissions equations for fixed-roof tanks. An equivalent diameter, De, is calculated on the length, L, of the tank and the real (vertical) diameter, D, of the tank. The equivalent diameter is then used in the AP-42 fixed-roof tank

equations. This calculation method shown is overly simplistic and tends to over-estimate the emissions. This method would be better described as a screening method for estimating emissions.

There are two factors that contribute to the over-estimation. The first is that the user is instructed to calculate the average vapor space by multiplying the exposed area of the liquid half-full, using the equivalent diameter, by one-half of the real diameter (for the height value). This value will always be greater than the real (default) average vapor space volume, which is one-half of the tank volume.

The second is that the exposed area of the stored liquid varies with the liquid height and is at its maximum when the tank is half-full. When the liquid level rises or falls, the exposed area decreases. Therefore, the effective diameter value decreases from this mid-point maximum. This would have no effect on the vapor space volume calculations but could reduce the saturation levels of the vapor space, particularly when lower vapor pressure liquids are stored. Lower vapor pressure liquids are often stored in horizontal cylindrical tanks.

Section 3.2.3.1.2, pg 3-8	Fourth sentence, change "1 to 15 mi/hr" to "2 to 15 mi/hr."
Table 3-3, pg 3-9	The K_{fa} factor for weighted mechanical actuation, ungasketed vacuum breaker should be "1.1".
Table 3-3, pg 3-9	The subscript "c" states emergency roof drains are not used on pontoon floating roof tanks. This is not correct and should be deleted.
Table 3-5, pg 3-11	Table 3-5, the number of pontoon legs for the 250 foot diameter tank should be "35".
Section 3.2.3.1.4, pg 3-14	This section should contain a paragraph explaining the effect of tank color on the vapor pressure. API Publication 2517, Section 2.2.2.3 and Table 10 describe this.
Section 3.2.4, pg 3-15	Add the following sentence to the bottom of the paragraph: "Vapors are also expelled by the expansion of the air in the enclosed space due to diurnal temperature changes (breathing)."
Section 3.2.4.2, pg 3-21	The rim loss factors for tight fitting seals are not provided. See API Publication 2519, page 8, Table 3.

Section 3.2.4.2, pg 3-21	Add the reference to "shoe" seal as stated in the NSPS. See discussion of the NSPS in Section 3.3.5 of this CTG. Thus change descriptions to: "Liquid-mounted or shoe primary seal only" and "Liquid-mounted or shoe primary seal plus secondary seal".
Section 3.2.4.3, pg 3-24	In description of N_{F1}, add "In the case of an internal floating roof tank that has been converted from an external floating roof tank by retrofitting with a self-supporting roof, Tables 3-3, 3-4 and 3-5 should be used to estimate the number of fittings."
Section 3.2.4.4, pg 3-29	The deck seam loss factor (Sd) of 0.20, which is given as a default value, should also be listed as the factor for a deck constructed with continuous metal sheets with a 5 foot spacing between seams.
Section 3.3, pg 3-29	This is an excellent summary of the regulations.
Section 3.3.1, pg 3-29	Subpart K became effective June 11, 1973 for tanks greater than 65,000 gallons that were constructed, reconstructed or modified after that date. The date of March, 1974 is effective for tanks between 40,000 and 65,000 gallons. No mention is made of the exemption for tanks at drilling or production facilities which are used prior to custody transfer.
Section 3.3.4, pg 3-31	Subpart Ka NSPS, the effective date is implied to be April, 1980. The subpart actually is effective for tanks constructed, reconstructed or modified after May, 1978. There is no mention of the exemption for production tanks used prior to custody transfer, which are less than 420,000 gallons. Also, there is no mention of the inspection requirements for the seals on external floating roof tanks.
Section 3.3.5, pg 3-32	Volatile Organic Liquid NSPS, there is no mention that this is actually Subpart Kb. The effective date is implied to be April 1987. The subpart actually is effective for tanks constructed, reconstructed or modified after July 1984. There is no mention of the exemption for production tanks used prior to custody transfer, which are less than 420,000 gallons. Also, there is no mention of the exemption for tanks at gasoline bulk plants and service stations, or tanks used for the storage of

	beverage alcohol. Also, there is no mention of the requirement for periodic inspection of roof seals, gaskets, and membranes in all regulated internal floating roof tanks and external floating roof tanks.
Section 3.3.5, pg 3-32	Some reference should be made to support 40 CFR Part 60, Subpart Kb as it is often referred to as such.
Section 3.3.5, pg 3-32	Last paragraph, add as second sentence: "Shoe seals are also typical to internal floating roof tanks which have been converted from external floating roof tanks by retrofitting with a self-supporting fixed roof."
Section 3.3.6, pg 3-33	Reference to the baseline control method as being a low cost, non-contact internal floating roof tank is incorrect. Depending on the diameter, a non-contact internal floating roof tank may cost more. Also, the use of a single vapor-mounted seal is not permitted.
Section 3.4.1.1, pg 3-34	When referring to RVP and then "vapor pressure", TVP should be used.
Section 4.0, pg 4-1	Differences in fittings scenarios could change the order of hierarchy. A spreadsheet is attached as Exhibit A which further illustrates the concern mentioned above. The CTG indicates that the contribution to the total loss due to fittings is +/- 28%. The spreadsheet shows that "typical" fittings on a 50 foot diameter tank with a mechanical shoe primary seal are, in fact, 28% of the total. The fittings contribution increases to 72%, however, if the tank has a slotted guide-pole. The respective contributions due to each source category vary too widely to be assigned a representative percentage. A hierarchy of equipment cannot be readily achieved when all source categories are included in the same list because different combinations would result in different rankings. A separate hierarchy for each source category however, could be readily developed. Such an approach would also lend itself to including all floating roof tanks, rather than having separate lists for internal and external floating roof tanks.
Table 4-1, pg 4-2	This table lists Control Options 1 through 6. The reference in Section 5.2, pg 5-1 is to Control Options I through V. The inconsistency in these tables is confusing.

Table 4-1, pg 4-2	Under Control Options 5 and 6, add "or shoe" after the words "liquid-mounted".
Table 4-1, pg 4-2	Add superscript "b" after superscript "a" in the title after "RATE". Add another footnote: "[b]Self-supporting fixed roofs would result in lower emission rates for each control option."
Table 4-2, pg 4-3	Footnote "a" is missing.
Table 4-2, pg 4-3	Add superscript "b" after superscript "a" in the title after "RATE". Add another footnote: "[b]Conversion to an internal floating roof tank by retrofitting with a self-supporting fixed roof would result in lower emission rates for each control option." The reason is primarily because it blocks the wind, but the "shading" effect may provide additional benefit by resulting in a lower surface temperature of the stored product.
Section 4.3, pg 4-5	Third paragraph, are the fittings assumed to be controlled or uncontrolled?
Table 4-3, pg 4-7	In footnote, third sentence, change "split" to "slit".
Table 4-4, pg 4-8	Add "or shoe" after "Liquid-mounted" in two places.
Section 4.3.3, pg 4-9	The second paragraph does not address bolted construction with gasketed seams as a potential emission reduction or control. The statement that the deck seam losses are not a factor of the type of seam is incorrect.
Section 4.4, pg 4-9	The first paragraph in this section should be deleted. There are too many options to consider, i.e. tank size, fittings, seal details, etc. to make such a generic statement.
Section 4.4, pg 4-9	First sentence, add "typical" before the words "internal floating". Also, add a sentence to the end of the paragraph: "An internal floating roof tank with welded deck seams and no support columns would emit less VOC per unit of storage area than do external floating roof tanks due to the elimination of wind influence."
Table 4-5, pg 4-11	Deck fitting type 3 (or any equipment description) does not address slotted gauge pole/sample wells. This should be added.

Section 4.4.3, pg 4-12	Add a last sentence: "Retrofitting an external floating roof tank with a self-supporting fixed roof would convert the tank to an internal floating roof tank and eliminate the wind influence, thereby reducing the rim seal losses."
Table 4-6, pg 4-13	Title of second column should be $(10)^N K_R$.
Table 4-6, pg 4-13	Add as sixth description: "Metallic shoe primary seal only with self-supporting fixed roof retrofitted to tank[c]." Add "3.0[d]" and "99%" in second and third columns respectively. Add as last description: "Liquid-mounted or shoe primary seal with rim-mounted secondary seal with self-supporting fixed roof retrofitted to tank[c]." Add "1.6[d]" and "99%" in the second and third columns respectively. Add footnotes as follows: "[c]Retrofitting with a self-supporting fixed roof converts the tank to an internal floating roof tank." "[d]From values listed in Section 3.2.4.1."
Table 4-6, pg 4-13	Sixth description as written, change "steel" to "seal". Also, in footnote a, the word "listed" is shown twice.
Section 4.5, pg 4-14	Delete the first sentence on this page. It is uncommon to put a redundant blower in the vapor collection system. Blowers/ electric motors do not fail often enough to justify a full spare. In case of a failure, the tank vents through the pressure/vacuum vents while the blower is repaired. Occasionally, there are more than one blower for capacity reasons, not sparing.
Section 4.5, pg 4-14	The reference to saturators should be deleted. Saturators are very unusual. More common are systems that are designed to run rich (above upper explosive limit), enriched with natural gas to 1.2 times upper explosive limit (21 percent), or inerted with nitrogen or inert flue gas. Some systems are designed to run lean (<25 percent of lower explosive limit). Flame arrestors and/or water seals are almost always used.
Section 4.5.1, pg 4-14.	The statement that applying the technology to VOL's is not difficult should be stricken. The application of carbon adsorption to petroleum mixtures is a complex problem. The reference given is for vapor recovery of a pure hydrocarbon, benzene, which is a simpler problem. Some specific issues to be concerned about when applying carbon adsorption (CA):

- o CA capacities to adsorb C_1, C_2, C_3, and C_4 molecules are very low. For practical purposes, CA is not a good recovery technology for these molecules. They pass through the bed almost immediately.

- o Hot vapor streams which contain heavier components saturate the carbon with molecules which cannot be removed except by conditions more severe that the CA unit is capable of. The carbon usually must be replaced.

- o The H_2S present in some petroleum product vapors reacts on the carbon to form solid elemental sulfur (Clause Reaction), which fouls the carbon bed. The elemental sulfur cannot be regenerated off the bed so H_2S containing streams are not good candidates for CA.

- o Water vapor is also adsorbed by the carbon, so vapor streams with high humidity must be dried before the CA unit. Also, if water vapor is present, the carbon must be protected from sub-freezing temperatures or else the carbon particles will be damaged by ice crystal formation.

- o Part of the complexity of applying carbon adsorption is in sizing the carbon column to handle a peak vapor load in short period of time vs. a truck loading rack recovery unit that handles small vapor volumes over a long period of time.

Section 4.5.1, pg 4-14	Third paragraph, regarding steam regeneration, it would be unique for a typical gasoline marketing facility to generate steam and have an associated wastewater treatment system on site.
Section 4.5.2, pg 4-15	First paragraph, fourth line, delete "the simplest to operate". Oxidation units require a significant supplemental supply of fuel to operate. Of concern, they generate NOx and CO which may need to be removed and also may require regular monitoring.
Section 4.5.2, pg 4-15	The reference to saturators should be deleted. Saturators are very uncommon. Vapor gathering systems are deliberately designed to operate at less than 25 percent of the lower explosive limit or above 1.2 times the upper explosive limit to avoid the possibility of propagating explosions.
Section 4.5.2, pg 4-15	Delete the word "two" in the second full paragraph, second sentence. Only a single water seal between the combustion device and the vapor system is common. Dual seals are a redundance used at the owner's option.
Section 4.5.3, pg 4-15	Refrigerated condensation systems are also used on vapor collection systems in addition to vent condensers.

Section 4.6.2, pg 4-17	Additional rim floatation should be added as another consideration in the modifications.
Sections 4.6.2, pg 4-17 & 4.6.3	When retrofitting any internal floating roof tank with liquid mounted or secondary seals, additional buoyancy and storage loss must be considered. This may be especially important with non-contact internal floating roof tanks.
Section 4.6.4, pg 4-17	Practical experience has shown that hot work and/or tank redesign is almost always required, therefore, the tank must be taken out of service, cleaned and degassed.
Section 4.6.5, pg 4-17	Add a new section "4.6.5 Self-Supporting Fixed Roofs on External Floating Roof Tanks. Several design issues are encountered in the retrofit of a self-supporting fixed roof to an existing open-top tank. For example, the reactions from the fixed roof produce localized loading on the tank. The self-supporting fixed roofs are typically made of aluminum, which results in the potential for differential movement between the aluminum fixed roof and the steel tank shell due to the difference in their coefficients of thermal expansion."
Section 4.7, pg 4-18	Add the wording, "Emissions from liquid stored in a fiberglass fixed roof tank could be controlled by the use of a fiberglass internal floating roof tank."
Section 4.8, pg 4-18	The date for Reference 1, API Publication 2517, should be June 1989.
Section 5.2.1, pg 5-3	Third full paragraph, second sentence. Do not agree that the only control option is a condenser. The proper control method would be a vapor balance system; delivery to these tanks is typically by truck. This control system is described in an EPA report dated December 1977 (Report 450/2-77-035, page 14, reference alternative #2 vapor balancing of transport truck and the storage tanks).
Section 5.4.1, pg 5-7	The last sentence should be revised to read: "From Figure 5-8, it is shown that the greatest emission reduction for a baseline external floating roof tank with metallic shoe primary seal is obtained from the addition of a secondary seal and controlled fittings. From Figure 5-9, it is shown that the greatest emission reduction for a baseline external floating roof tank with a vapor-mounted primary seal is obtained by the substitution of a liquid-

	mounted primary for the vapor-mounted primary seal in conjunction with the addition of secondary seals and controlled fittings." The sentence, as written, is incorrect as it refers to two different baseline tanks and does not differentiate between the two.
Section 5.4.2.1, pg 5-7	First paragraph, it mentions that external floating roof tanks are equipped with a flange on which a secondary seal can be mounted. However, due to the ages of most external floating roof tanks, this flange either requires repair or modification in order to mount the secondary seal. In some cases hot work may be needed when installing a secondary seal on an external floating roof tank. In these cases, tanks would have to be cleaned and degassed. Also, adding a secondary seal to an existing external floating roof tank with the tank in service may violate safety company guidelines and should be left to each company to decide.
Figure 5-9, pg 5-20	Figure 5-9 does not include a definition for the "lm" abbreviation.
Section 5.5.1, pg 5-21	Table 5-1, the word "emissions" in the title of column 3 is misspelled.
Section 5.5.2, pg 5-22	Table 5-2, the title of column 2 should read "Nationwide Emission Estimates, Mg/yr (tons/yr)".
Section 6.2, pg 6-4	The value of petroleum product recovery credits is more appropriately $50 per ton instead of $320 per ton, based on wholesale butane prices at $0.10 per pound. The losses from most petroleum product (and crude oil) storage is primarily butanes and pentanes that were contained within the products. The CTG should be revised to show $50 per ton of recovered product. See Exhibit B.
Section 6.2, pg 6-3	First full paragraph, using 5 10 years as the expected equipment life may be more accurate.
Section 7.2, pg 7-3	Add the following definition for clarity because of the inspection requirements in Section 7.5: "Internal floating roof tanks are storage vessels that have a floating roof and a freely vented fixed roof. The fixed roof is not necessarily free of openings but does span the entire open plan area of the vessel."
Section 7.2, pg 7-3	Fifth full paragraph, a vapor-mounted seal does not have to be foam-filled. Delete "foam-filled."

Section 7.5, pg 7-4	Reading the information presented in Table 4-2, Table 4-6 and the general discussion on external floating roof tanks and gap criteria in Section 7.5, it may be difficult for operators of riveted tanks with mechanical shoe seals to meet the specified seal gap requirements of Section 7.5.
Section 7.5, pg 7-6	Item (ii) should be revised to state that no appreciable holes, tears or other openings in the shoe, seal fabric or seal envelope. Alternatively, the EPA should quantify this requirement as in the gap criteria stated above.
Section 7.5, pg 7-7	The requirement that the owner prepare an "operating plan" for control devices is redundant and unnecessary. The devices are subject to capacity verification and emissions testing when they are installed. Additional documentation is unnecessary. In addition, the units are always designed and tested (per state test requirements) at maximum, worst case loadings. The documentation for off peak flow rates, compositions, etc. is generally not available and would cost individual terminal operators thousands of dollars each to have developed. This section could be simplified to require that the owner/operator must have documentation that the system is capable of handling the peak load that is expected from his current maximum operating rate. Previous permit applications, design/ purchase specifications, or state approved performance testing would be sufficient.
Section 7.6, pg 7-8	Item 1., states the highest maximum true vapor pressure for the range of products stored should be used for emission calculation. This number would give the maximum emissions for that product at that particular time but would not be representative of the true emissions over the period of a year. For example, a products pipeline will pump a varying number of vapor pressure products depending on the season. Using the maximum vapor pressure over-estimates the true emissions over this period. A more accurate method would be to use the weighted average true vapor pressure and corresponding temperature.

Note: Unslotted guide-pole assumed Kf=640
Compare to slotted guide-pole Kf=4900
Difference 4260

HIERARCHY OF EQUIPMENT TYPES FLOATING ROOF TANKS
(assume 10 mph wind speed for EFRT)

50' Diameter EQUIPMENT DESCRIPTION	SEAL FACTORS	SEAM FACTORS Sd	Kd	LOSS FACTORS (LB-MOLE/YEAR) SEAL	FITTINGS	SEAMS	TOTAL
				50			
Open top tank, welded shell (EFRms) mechanical shoe primary seal	38.00	0	0	1900	735	0	2635
Open top, welded shell (EFRms,ss) shoe primary + secondary seal	2.00	0	0	100	735	0	835
Column-supported fixed roof (bIFRvm) Bolted deck, primary seal only	6.70	0.20	0.34	335	247	170	752
Column-sup'td fixed roof (bIFRvm,ss) Bolted deck, primary + secondary	2.50	0.20	0.34	125	247	170	542
Self-supporting fixed roof (wIFRms) Welded deck, shoe seal only	3.00	0	0	150	176	0	326
Self-sup'ting fixed roof (wIFRms,ss) Welded deck, shoe seal + secondary	1.60	0	0	80	176	0	256

72% IF GUIDE POLE IS SLOTTED

88% IF GUIDE POLE IS SLOTTED

100' Diameter EQUIPMENT DESCRIPTION	SEAL FACTORS	SEAM FACTORS Sd	Kd	LOSS FACTORS (LB-MOLE/YEAR) SEAL	FITTINGS	SEAMS	TOTAL
				100			
Open top, shoe seal only (EFRms)	38.00	0	0	3800	782	0	4582
Column-supported, bolted (bIFRvm)	6.70	0.20	0.34	670	696	680	2046
Column-supported, bolted (bIFRvm,ss)	2.50	0.20	0.34	250	696	680	1627
Open top, shoe + secondary (EFRms,ss)	2.00	0	0	200	782	0	982
Self-supporting, welded (wIFRms)	3.00	0	0	300	319	0	618
Self-supporting, welded (wIFRms,ss)	1.60	0	0	160	319	0	479

150' Diameter EQUIPMENT DESCRIPTION	SEAL FACTORS	SEAM FACTORS Sd	Kd	LOSS FACTORS (LB-MOLE/YEAR) SEAL	FITTINGS	SEAMS	TOTAL
				150			
Open top, shoe seal only (EFRms)	38.00	0	0	5700	826	0	6526
Column-supported, bolted (bIFRvm)	6.70	0.20	0.34	1005	1163	1530	3698
Column-supported, bolted (bIFRvm,ss)	2.50	0.20	0.34	375	1163	1530	3068
Open top, shoe + secondary (EFRms,ss)	2.00	0	0	300	826	0	1126
Self-supporting, welded (wIFRms)	3.00	0	0	450	524	0	974
Self-supporting, welded (wIFRms,ss)	1.60	0	0	240	524	0	764

Exhibit A

WHAT IS THE PRODUCT CREDIT FOR REDUCED VOC LOSSES ?

There are two ways of looking at the value of lost material:
The value is the same as the value of the liquid in the tank, or
The value is that of the lost material sold as a separate product.

The first method is appropriate for single component liquids, or for end-user commodities.

The second method is better for unfinished materials in production, and for wholesalers of broad product slates such as oil refiners.

The material that evaporates from petroleum fuel tankage is primarily lighter components such as butanes, pentanes, and other light hydrocarbons.

VALUE AS FINISHED PRODUCTS

	$/GAL	LB/GAL	$/LB
CRUDE OIL	0.56	7.1	0.08
GASOLINE	0.65	5.6	0.12

VALUE AS COMPONENT

BUTANE (normal)	0.47	4.9	0.10
NATURAL GASOLINE	0.53	5.6	0.09

AVERAGE OF BOTH METHODS = $0.10

All prices per gal shown above were taken from the Platt's Oilgram Price Report for Tues., 11/12/91; adjusted to price per gallon units.

All figures rounded off.

Exhibit B

APPENDIX: RECORD OF ATTENDANCE

RECORD OF ATTENDANCE
NATIONAL AIR POLLUTION CONTROL TECHNIQUES ADVISORY COMMITTEE MEETING
NOVEMBER 19, 20, AND 21, 1991

PLEASE PRINT

NAME AND AFFILIATION	BUSINESS ADDRESS (INCLUDE ZIP CODE)	TELEPHONE NUMBER	DATE(S) ATTENDED
D.P. ANDERSON FIRST CHEMICAL CORP	P.O. BOX 1427 PASCAGOULA, MS, 39568	(601) 938-2227	ALL
DACE DUHON GREAT LAKES CHEM.	P.O. BOX 1958 ELDORADO, AR. 71730	(501) 862-5141	ALL
ART BROOKS KCH Ser. Inc.	PO BX 1287 FOREST City NC	704 245-9836	11/19 TODAY
Bill Marp Council of Ind'l Boiler Owners	6035 Burke Ctr Pkwy Burke, VA 22015 Suite 360	(703)250-9042	11/19
Mark L. Weissert Calgon Carbon Corp.	P.O. Box 717 Pgh., Pa. 15230	412 787-6837	ALL
Robert W. Hermanson Amoco Oil Co	200 E. Randolph St MC 1103 Chicago Ill 60601-7125	312 856-7995	11/19 & 20
DAVID EMERSON AIR PRODUCTS AND CHEMICALS	7201 Hamilton Blvd Allentown PA 18195	215 481 8347	11/19 - 11/20
Lee W. Morris Engelhard Corp	101 Wood Ave Iselin, NJ 08830-0770	908 205 5379	11/19-21
BRUCE A. STEINER AMER. IRON & STEEL INST.	1101 - 17TH ST NW. - SUITE 1300 WASHINGTON, DC 20036	202 452-7271	11/19
Michael Lapazanski NC DEHNR DEM Air Quality	512 N. Salisbury St. Raleigh NC 27611	(919) 733-5340	All
Dale C. Jones Vantage Products Corp	1715 Dogwood dr. Conyers, Ga. 30207	(404) 483-0915	All
S. B. Perrie - Sandner EASTMAN KODAK	Rochester NY 14630	716- 588-6477	11/19 - 11/21
Cheryl Russell Boling	1700 N. Moore St. Arlington, Va. 22209-1989	703- 558-9605	11/19-21
CAROL ATHEY Midwest Research Inst.	401 HARRISON OAKS CARY, NC 27513	919-677- 0249	11/19-20

RECORD OF ATTENDANCE
NATIONAL AIR POLLUTION CONTROL TECHNIQUES ADVISORY COMMITTEE MEETING
NOVEMBER 19, 20, AND 21, 1991

PLEASE PRINT

NAME AND AFFILIATION	BUSINESS ADDRESS (INCLUDE ZIP CODE)	TELEPHONE NUMBER	DATE(S) ATTENDED
KENNETH ZAK W.R. GRACE & CO-CONN	7379 ROUTE 32 COLUMBIA, MD 21044	410-531-4383	11/19-21
JOHN CRENSHAW RADIAN CORP	BOX 13000 RTP, NC 27709	919-541-9100	11/19-21
WILLIAM SEITZ Neighborhood Cleaners Assn	116 EAST 27 Street New York N.Y 10016	212 684-0544	11/19
ROB KAUFMANN AMER. PAPER INSTIT.	1250 CONNECTICUT AVE., N.W. SUITE 210 WASHINGTON, D.C. 20036	202 463 2588	11/19-20
J. SCOTT HARTMAN MOTIAM	MOTIAM ROAD, PITT, PA	(412) 777-7647	ALL
GORDON KERBY VA. DEPT AIR POLL CNTRL	P.O. BOX 10089 Richmond, VA 23240	804 3717698	ALL
TOM STARK AMOCO CHEMICAL	200 E. RANDOLPH DR. CHICAGO, IL 60601	(312) 856-2813	ALL
Nancy Ray Goodyear	1144 E market ST AKRON, OH 44316	216 796-5042	19 & 20
Melvin Keever BP. America	1776 I Street NW Suite 1000 Washington DC 20006	202 785-4888	19 & 20
NAOMI SUSS PPG	5875 New King CT TROY MI 48007	313-641-2198	19, 20
Julia Fletcher Latham & Watkins	1001 Pennsylvania Ave, NW Washington, DC 20004	(202) 637 2238	19, 20, 21
Josh Tapp USEPA Region VII	726 Minnesota Ave KC, KS 66101	913 551-7606	19-21
Mary Morningstar Lockheed Corp.	1050 E. Flamingo Rd Las Vegas, NV 89119	702- 731-3274	19-20
Dan Grieshop United McGill Corp	1779 Refugee Rd. Columbus, OH 43214	614 443-0192	19-20

RECORD OF ATTENDANCE
NATIONAL AIR POLLUTION CONTROL TECHNIQUES ADVISORY COMMITTEE MEETING
NOVEMBER 19, 20, AND 21, 1991

PLEASE PRINT

NAME AND AFFILIATION	BUSINESS ADDRESS (INCLUDE ZIP CODE)	TELEPHONE NUMBER	DATE(S) ATTENDED
Robert Jurczyszyn Akzo Coatings Inc	1845 Maxwell Troy, Mich 48083	(313) 637-5203	Nov 19, 20
Jim Carlisle Morton Int	2910 Waterview Dr. Rochester Hills, Mi 48309	(313) 853-3000	Nov 19, 20, 21
Chet Vogel EPA/AEERL	MD-61 RTP, NC 27711	919 541-2527	11/19/91
Ellen Pulaski Tenera	One Copley Pkwy Suite 216 Morrisville NC 27560	919 460-0200	11/19/91
Marsha Brunscome RTI	Box 12194 RTP, NC	919 541-6726	11/19/91
Barbara Bruschi Hallmark Cards	2501 Magee Kansas City Mo 64141	816 274-4348	11/19/91
Lenora Garey General Motors	30400 Mound Rd. P.O. Box 9015 Warren, MI 48090-9015	313 947-1952	11/19-21/91
Debra Dawson State of Alabama	1751 Dickinson Dr. Montg, AL 36130	205 271-7861	11/19-11/21
Laura Lonowski US EPA - Region VIII	603 Hartford Boulder, CO 80303	303 293-1761	all
Bill Pawska MO DNR APCD	301 Jefferson Jefferson City, MO	314 751-4817	11/19-11/21
Don Johnson NC Air Quality	PO Box 29535 Raleigh, NC 27626	919 733-3340	11/19-11/21
Yogesh Doshi Va. Dept. of Air Pollution Control	P.O. Box 10089 Richmond, Va. 23240	(804) 371-7697	11/19-11/21
Peter Westcott US EPA / RTP	MD 19 RTP, NC 27711	919 541-1058	"
Roy Huntley EPA / RTP	MD-19 RTP, NC 27711	919 541-1060	11/19

RECORD OF ATTENDANCE
NATIONAL AIR POLLUTION CONTROL TECHNIQUES ADVISORY COMMITTEE MEETING
NOVEMBER 19, 20, AND 21, 1991

PLEASE PRINT

NAME AND AFFILIATION	BUSINESS ADDRESS (INCLUDE ZIP CODE)	TELEPHONE NUMBER	DATE(S) ATTENDED
Joelle Bryan NCDEM	512 N. Salisbury St. Raleigh, NC	733-3340	11-19
Bob Zerbonia RTI	RTI	541-5961	11-19
LOUISE SUNNY SMITH	NC ASSOC. OF LDRS. & CLEANERS 1043 DRESSER COURT RALEIGH, NC 27600	919 850.0707	11-19
Michael Pucci NJT	131 Morristown Rd Basking Ridge NJ	908 204 8209	11-19
Terry Harrison EPA	EPA MD14 RTP NC 27711	919-541-5233	11/19
JOHN DENT RUST INT'L CORP	100 CORPORATE PARKWAY BIRMINGHAM, AL 35242	205-995 7227	11/19
Carl Lacy	EPA MD-13	541-5261	11/19
BARBARA BANKOFF	BANKOFF ASSOCIATES 3733 YUMA ST., NW WASH., D.C. 20016	202 343-4810	11/19
KIRT COX	U.S. EPA / OAQPS MD-15, RTP, N.C. 27711	(919) 541-5399	11/19
Douglas G. McKinney	US EPA / ORD/AEERL MD-60 RTP NC 27711	919 541-3006	11/19
Beth Friedman	Midwest Research Inst. 401 Harrison Oaks Blvd. Cary, NC 27513	(919) 677-0249 x5450	11/19
Jim Turner	RTI	541-5948	11/19 11/21
WC Holbrook	BFGoodrich	216 447-7925	11/19, 20
J. DiLeo	Clean Air Report	703-892-8556	11/19, 20, 21

RECORD OF ATTENDANCE
NATIONAL AIR POLLUTION CONTROL TECHNIQUES ADVISORY COMMITTEE MEETING
NOVEMBER 19, 20, AND 21, 1991

PLEASE PRINT

NAME AND AFFILIATION	BUSINESS ADDRESS (INCLUDE ZIP CODE)	TELEPHONE NUMBER	DATE(S) ATTENDED
Bob Lenney, Reynolds Metals Co.	6601 W. Broad St, Richmond, VA 23230	804-281-3482	11/19, 11/20
John Ogle, Dow Chemical	B-101 Bldg, Freeport, Tx 77541	409-238 2819	11/19, 11/20
Susan Tarnebo	OAQPS/ESD/SDB (US EPA) MD-13, RTP, NC 27703	FTS 629 5167, (919) 541-5167	11/19
Bette Morgan, CMA	2501 M St NW, Washington DC 20037	887-1182 (202)	11/19
Debbie Jordan, US EPA Region IX	75 Hawthorne St (A-5-2), San Francisco, CA 94105	FTS 744-1257	11/19
Steve Sparder, Otto York Co	6611 Killough Rd, Houston, Tx 77086	(713) 445-7026	11/19
Norman Morrow, Exxon Chemical Co	PO Box 241, Baton Rouge, La 70821	504 359-7226	11/19-21
Tom Tripp, Magnesium Corp of America	238 North 2200 West, Salt Lake City Ut 84116-0690	801-532 1522	11/19-20
Marc Nelson, DuPont	1701 Penn Ave Ste 900, Washington, DC	202 728 3661	11/19-21
David S. Davis, Vulcan Chemicals	P.O. Box 530390, Birmingham, AL 35253-0390	205 877 3854	11/19
Peggy Redmond, Midwest Research Inst.	401 Harrison Oaks Blvd. Suite 350, Cary, NC 27513	919-677-0249	11-19-91
Ken Froehlich, Teepak, Inc	915 N Michigan, Danville IL 61832	(217) 446-6860	11/19/91
VMMcIntire, ECC	PO Box 511, Kingsport, TN 37662	615 229-3045	11/19-21
SANDRA MORSE, VA. Dept Air Pollution Control	P.O. Box 10089, Richmond, VA 23240	804-225-3634	11/19-21

RECORD OF ATTENDANCE
NATIONAL AIR POLLUTION CONTROL TECHNIQUES ADVISORY COMMITTEE MEETING
NOVEMBER 19, 20, AND 21, 1991

PLEASE PRINT

NAME AND AFFILIATION	BUSINESS ADDRESS (INCLUDE ZIP CODE)	TELEPHONE NUMBER	DATE(S) ATTENDED
Bruce Varner U.S. EPA, Region V	230 S. Dearborn Chicago, IL 60604	312-886-6793	11/19 & 20
DAN GEARY ARCO - API	515 SO FLOWER ST LOS ANGELES, CA 90071	213-486-1580	11/19 & 20
Thomas Robinson Vulcan Chemicals	PO Box 530340 B'ham AL 35253	205 877 3536	11/19
Pat Moran Rohm & Haas Ky Inc	PO Box 32260 Louisville, Ky 40232	502 449-5258	19-21
Valerie Everette Radian Corporation	1300 Box RTP NC 27709	541-9100	11/19
Brenda Robertson U.S. Navy	Aircraft Envir. Support Office Code 67100, Bldg M-1 Naval Aviation Depot NI San Diego, CA 92135	(619) 545-2915	19-21
David Salman US EPA	MD-13 RTP NC 27711	919 541-0859	19-21
Karl P. Schulke E.I. DuPont	B5226 1007 Market St. Wilmington De 19898	302 773 4394	19-21
CHUCK GRIGSBY BASF CORP	8 CAMPUS DR PARSIPPANY, NJ 07054	201 397 2803	19-20
Milton Wright RTI	P.O. Box 12194 RTP, NC 27709	(919) 541-6557	11/19
Pey Hopkins Ford Motor / MUMA	15201 Century Dr. Suite 608 Dearborn, MI 48130	313 426-5233	11/19
ANUPOM GANGULI SOUTH COAST AIR QUALITY MGMT. DISTRICT	DIAMOND BAR, CALIFORNIA	(714) 396-3185	11/19-20
Roger Blanchard US EPA, AEERL	MD 60 RTP, NC 27711	919 541-7504	11/19/91
MICHAEL MAXWELL US EPA, AEERL	MD-04 RTP, N.C. 27711	919 541-3091	11/19/91

RECORD OF ATTENDANCE
NATIONAL AIR POLLUTION CONTROL TECHNIQUES ADVISORY COMMITTEE MEETING
NOVEMBER 19, 20, AND 21, 1991

PLEASE PRINT

NAME AND AFFILIATION	BUSINESS ADDRESS (INCLUDE ZIP CODE)	TELEPHONE NUMBER	DATE(S) ATTENDED
Connie Deford Dow Chemical Co.	2020 Dow Center Midland, MI 48640	517/ 636-6978	19, 20+21
David Painter EPA	Mutual Building OAQPS MD-13	541 5515	11-19
Robert P. Strieter	American Petroleum Inst 1220 L St. NW Wash., DC 20005	202 682-8337	11-19, 20
Timothy Duhamel Prototech Co	32 Fremont St. Needham MA 02194	617 444 5188	11/19-21
GARY O'DEA CHEMICAL MANUFACTURERS ASSN	CMA 2501 M Street, N.W. WASHINGTON, D.C. 20037	202 887 1353	11/19 - 11/21
RICHARD MARINSHAW MIDWEST RESEARCH INSTITUTE	401 Harrison Oaks Blvd Suite 350 Cary, NC 27513	677-0249	11/19 - 11/20
Amy Meyers Chemical Mfrs. Assn	CMA 2501 M St. NW Washington DC 20037	202 887-1370	11/19 - 11/21
Joe Curreri ENSR Consulting and Engineering	35 Nagog Park Acton, MA 01720	508 635-9500	11/19, 11/20
ERIC ROBINSON Thompson Publishing Group	1725 K St. NW 2nd Floor Washington DC 20006	202 872-4020	11/19 - 11/21
Jerry Avery AQD - MDNR	Box 30028 Lansing MI 48909	517 322 5095	11/19 - 11/21
John E SCHUBERT	Va. DAPC PO Box 10089 RCHMD, VA 23240	804-786 0177	11/19 - 11/21
Kaye Heitmann	The Duriron Co. Box 8820 Dayton, OH 45401	(513) 476-6119	11/19 - 21
Clay Freeberg	Chevron PO Box 7924 San Francisco, CA 94120	415 894-6879	11/19 → 11/20
ROBERT EATON	NOVACOR CHEMICALS PO BOX 51927 INDIAN ORCHARD, MA 01151	413 781-1441	11/19 → 11/21

RECORD OF ATTENDANCE
NATIONAL AIR POLLUTION CONTROL TECHNIQUES ADVISORY COMMITTEE MEETING
NOVEMBER 19, 20, AND 21, 1991

PLEASE PRINT

NAME AND AFFILIATION	BUSINESS ADDRESS (INCLUDE ZIP CODE)	TELEPHONE NUMBER	DATE(S) ATTENDED
Tracy Gionfriddo Rodian Corp.	Box 13000 RTP, NC 27709	541-9100	11/19
Max Batavia DHEC	2600 Bull St Columbia, S.C, 29201	803-734 4750	11/19
Nancy Mayer USEPA	MD-15 (AQMD) RTP, NC 27707	541-5520	11/19
DAVID FRIEDLAND Beveridge & Diamond	1350 I St NW #700 DC 20005	202 789-6047	11/19-21
Alice Mayer Edison Electric Institute	701 Pennsylvania Ave NW Washington D C 20004	202 508-5710	11/19
Jack McClure Shell Oil Company	PO Box 4320 Houston TX 77210	713 241-3999	11-19 11-20
Mark Hedrick Research Triangle Institute	PO Box 12194 RTP NC	919 541-8708	11/19
Calvin Ku Missouri DNR	P.O. Box 176 Jeffson City, MO 65102	314 751-4817	11/19-21
Jennifer Seinfeld Versar, Inc.	9200 Rumsey Road Columbia, MD 21044	(410) 964-9200	11/19
Robert J Nelson National Paint & Coatings Assn	1500 Rhode Is Ave NW Washington DC 20005	202 462-6272	11/19-21
Jeff Kiove Monsanto Co.	800 N Lindbergh St. Louis MO 63011		
Bob Rosensteel EPA	MD-13 RTP, NC 27711	919 541-5608	11/19 - 11/20
HAILE MARIAM EPA	401 M St. S.W (OS-320W) WASH, DC 20460	703 308-8439	11/19
Margaret L. Claiborne Hunton & Williams	2000 Pennsylvania Ave Wash., DC 20036	202 955-1536	11/19-21

RECORD OF ATTENDANCE
NATIONAL AIR POLLUTION CONTROL TECHNIQUES ADVISORY COMMITTEE MEETING
NOVEMBER 19, 20, AND 21, 1991

PLEASE PRINT

NAME AND AFFILIATION	BUSINESS ADDRESS (INCLUDE ZIP CODE)	TELEPHONE NUMBER	DATE(S) ATTENDED
Eugene P Chumpler USEPA, RTP	OAQPS (MD-13) USEPA RTP NC 27711	919-541 0881	Tuesday
Ed McCarle	OAQPS MD-14 USEPA RTP NC 27711	919-541 5546	Tues - Thurs
Jim Wilt	~~USEPA~~ OAQPS MD-13	919 541 5371	[illegible]
Robert Wooten DEM/APQ	Box 29535 Raleigh 27626-0535	(919) 733 3940	Tu - Th
TOM MCCABE NORTHROP	ONE NORTHROP AVE 1201/29 HAWTHORNE CA 90250	(310) 331-4704	TUE-THUR
BARRY C. HENDERSON R.J. REYNOLDS	R.J. REYNOLDS WINSTON-SALEM N.C. 27102	919-741 3834	TUE-THUR
Jack Webster TEEPAK, INC	915 N. MICHIGAN AVE DANVILLE, IL 61832	217-446 6460 ET312	11/19-21
Kathy Bailey CMA	2501 M St., NW Washington, DC 20037	202 8871186	Tue-Thurs
A. E. Vickers R.J.	P.O. BOX 13582 RTP NC 27709	919-990 7818	Tue-
RICHARD SIGMAN CMA	2501 M ST., NW WASHINGTON, DC 20037	202 887-1313	TUE-THURS.
Tim Watkins EPA	OAQPS MD-13 RTP, NC 27711	(919) 541 5217	Tue + Wed
Lalit Banker EPA		919-541 5420	Mon Tues Wed
Phil Mulaine EPA	MD-13 RTP, NC 27711	(919) 541-5289	Tue & Wed
Maureen Henley SPI	1275 K St NW Suite 400 Washington, DC 20005	202/371-5219	11/19-20

RECORD OF ATTENDANCE
NATIONAL AIR POLLUTION CONTROL TECHNIQUES ADVISORY COMMITTEE MEETING
NOVEMBER 19, 20, AND 21, 1991

PLEASE PRINT

NAME AND AFFILIATION	BUSINESS ADDRESS (INCLUDE ZIP CODE)	TELEPHONE NUMBER	DATE(S) ATTENDED
Bill Johnson EPA	RTP, NC 27711	919 541-5245	Nov 19,20,21
Mike Wilson Rust	100 Corporate Parkway Birmingham, AL 35242	919 995-7230	Nov 19,20
Bob Anax	1135 KILDAIRE FARM RD SUITE 200 CARY, NC 27511	919 380-0498	
John P DeVeto Ageolon Company	Ageolon Company 2711 Centerville Road Wilmington, DE 19850	302 996-2227	Nov 19,20,21
Jim Maysilles EPA/OAQPS		919 541-3265	11/19
Susan Fields Radian Corp.	PO Box 13000 Research Triangle Park NC 27709	(919) 541-9100	11/19
JOE MANAINO Radian Corp.	"	"	11/19
PARIS BRISCOE ABB AIR PREHEATER	1301 HIGHTOWER TRAIL SUITE 340 ATLANTA, GA 30350	404 393-6189	Nov 19-21
Paul Eisele Nasco Corp	21001 Van Born Taylor MI 48180	313 374 6031	Nov 19-21
MARK BERKMAN NERA	121 CALIFORNIA ST SUITE 2000 SF CA 94111	415 291 1000	Nov 19-21
RICK BURT SYRRINE ENV.	7833 NATIONAL DR. RALEIGH, NC	881-0777	11-19
Cindy Daignault Nordson	1150 Nordson Dr Amherst Oh.	216 988-9411	11/19
Tom Soychak Waste Management	3003 Oak Brook, Illinois 60521	708 572-8778	11/20
MARK LUTTERBACH RED SPOT PAINT	1016 E. COLUMBIA ST. WANSVILLE IN. 47711	812 428-9100	11/20

RECORD OF ATTENDANCE
NATIONAL AIR POLLUTION CONTROL TECHNIQUES ADVISORY COMMITTEE MEETING
NOVEMBER 19, 20, AND 21, 1991

PLEASE PRINT

NAME AND AFFILIATION	BUSINESS ADDRESS (INCLUDE ZIP CODE)	TELEPHONE NUMBER	DATE(S) ATTENDED
DAVID GUSTAFSON DOW	2030 WHDC MIDLAND, MI	517 636-2953	11/19-21
Dennis Miller CMA/BASF	100 Cherry Hill Rd Parsippany, NJ 07052	201 316-3809	11/19-21
Tom Lahre	EPA (MD-13) RTP, NC 27711		11/19
Mike Porter Amoco Corp	1615 M. ST NW Washington DC 20036	202 857-5340	11/19
BILL TAYLOR UNION TEXAS PETROLEUM	BOX 2120 HOUSTON, TX 77252	(713) 968-3458	11/19-11/20
JOE WOOLBERT TEXAS EASTMAN Co.	P.O. Box 7444 LONGVIEW, TX 75607	(903) 237-5475	11/19 - 11/21
ALAN TROY Allied Signal	PO Box 830 Hopewell VA 23860	804 530 6155	11/19-20
RHONDA ROSS GENERAL MOTORS	30400 MOUND RD. P.O. BOX 9015 WARREN, MI 48090-9015	313 947-1420	11/19
DAVID HEISER ELI LILLY & CO	LILLY CORPORATE CENTER INDIANAPOLIS, IN 46285	317-276-3950	11/19-20
LASZLO TAKACS OCCIDENTAL CHEMICAL	360 RAINBOW BLVD NIAGARA FALLS, NY 14302	716-286 3103	11/19-21
BRUCE MOORE USEPA/OAQPS/ESD	MD-13 RTP, NC 27711	919 541-5460	11/19-21
David A. Woodring BP Chemicals	200 Public Square 30-2404-D Cleveland, Ohio 44114	212 586-8670	11/19-21
Joe Hovious UNION CARBIDE	39 OLD RIDGEBURY RD DANBURY CT 06810	203 794-5783	11/19-21
Bennett King Radian		919 541-9100	11/19

RECORD OF ATTENDANCE
NATIONAL AIR POLLUTION CONTROL TECHNIQUES ADVISORY COMMITTEE MEETING
NOVEMBER 19, 20, AND 21, 1991

PLEASE PRINT

NAME AND AFFILIATION	BUSINESS ADDRESS (INCLUDE ZIP CODE)	TELEPHONE NUMBER	DATE(S) ATTENDED
Jim Batt Union Carbide Corp	17304 Preston Rd Ste 950N Dallas, TX 75252	(214) 733-6703	11/19-20
Jim Ondy Battelle	505 King Ave Columbus Ohio 43201	614/424-7855	"
Sarah Remelt Gravure Assoc. of America	1200-A Scottsville Rd Rochester, NY 14624	716-436-2150	11/19-11/21
BRENDA SHINE MIDWEST RESEARCH INSTITUTE	CARY, NC.	677-0249	11/19-11/21
John Paul Kusz Safety Kleen Corp.	777 Big Timber Rd Elgin Ill. 60123	708 468 2514	11/19 20 21/91
James Gaspar Safety Kleen	777 Big Timber Rd Elgin IL 60123	312 694 2700	11/19-20
Martha J. Waller Parker, Poe, Adams & Bernstein	2600 Charlotte Plaza Charlotte NC 28244	704- 365-9050	11/19, 20, 21
Steven A. Coppola E.I. DuPont	D-7152 1007 Market St Wilmington DE 19898	302 773-0149	11/19
ANNETTE STANLEY CHEMICAL MAN. ASSOC.	2501 M ST. NW WDC 20037	202 887-1103	11/19-21
J Berry	EPA		
David Neaine Midwest Research Institute	401 Harrison Oaks Blvd 350 Cary NC 27513	919 677 0249	11/19-
Joe Ledrino Vista Chemical	900 Threadneedle Houston TX 77079	713 588-3446	11/19
Paul Wilchite Stone Container Corp.	2150 Parklake Dr Suite 400 Atlanta GA 30345	404 621-6709	11/19-21
Candace Sorrell EPA	MD-19 RTP, NC 27711	919 541- 1064	11/19/91

RECORD OF ATTENDANCE
NATIONAL AIR POLLUTION CONTROL TECHNIQUES ADVISORY COMMITTEE MEETING
NOVEMBER 19, 20, AND 21, 1991

PLEASE PRINT

NAME AND AFFILIATION	BUSINESS ADDRESS (INCLUDE ZIP CODE)	TELEPHONE NUMBER	DATE(S) ATTENDED
Lynne Harris Society of the Plastics Industry	1275 K St NW Washington, DC 20005	202 371-5217	11/19-21
Nancy Cookson CMA	2501 M St NW Washington DC 20037	202 887-1241	11-19/21
Jonathan Kiser NSWMA	1730 RI Ave, NW, #1000 Washington, DC 20036	202 659-4613	11/19-20
Richard S. Cesaretti Union Carbide Corp.	3200 Kanawha Turnpike S. Charleston, WV 25303	304 747-4806	11/19-20
Linda Herring EPA/ESD/SDB	RTP, NC 27711	(919) 541-5358	11/19-20
David Svendsgaard	EPA/ESD/CPB MD-13 RTP, NC 27711	541-2380	11/19-21
Charles French	EPA/ESD/PAB MD-13 RTP, NC 27711	541-0467	11-19-91
EPA/ORD/AEERL Michael Kosusko	MD-61 RTPNC 27711	541-2734	11/19,20/91
Lawrence E Shaffer NCR	7240 Moorfield Hwy Liberty, S.C. 29657	803/843/1572	11/19/20
Angel Aguiar MedX	7600 N.W. 69th Ave Medley, FL 33166	800 527-0666	11/20/91
Richard Copland EPA/ESD/SDB	EPA/ESD/SDB (MD-13) RTP, NC 27711	(919) 541-5265	11/20/91
Steve Klish Graco, Inc	9451 W. Belmont Franklin Pk. IL 60131	708 671 8406	11/20 11/21
Linda Lamb Sirrine Env. Consult.	3733 Nat'l Drive Suite 120 Raleigh 27612	881-0777	11/20
Terry Black PA-DER	P.O. Box 2357 Harrisburg PA 17105-2357	(717) 787-4310	11/20 & 21

RECORD OF ATTENDANCE
NATIONAL AIR POLLUTION CONTROL TECHNIQUES ADVISORY COMMITTEE MEETING
NOVEMBER 19, 20, AND 21, 1991

PLEASE PRINT

NAME AND AFFILIATION	BUSINESS ADDRESS (INCLUDE ZIP CODE)	TELEPHONE NUMBER	DATE(S) ATTENDED
Jim Smith EPA/OAQPS	MD-13 RTP NC 27711	(919) 541-4718	11-19-91
M.R Clowers Phillips Petroleum	13A1 PB Bartlesville, OK 74004	(918) 661-7153	11-19-11-20
Sherry Edwards SOCMA	1330 CT Ave NW #300 Wash, DC 20002	202 822-6760	11-19-20-91
Angelia Hill Region IV EPA	345 Courtland Ave Atlanta, GA	(404) 347-5014	11-19 - 11-21
Nancy B. Pate OAQPS/ESD	MD-13 RTP NC 27713	919 541 5347	11/19/91
Tony Wayne ~~OAQPS/ISD/EMB/TSS~~	MD-19	919-541 3576	11/19/91
Jim Crowder OAQPS/ESD/ISB	MD-13	919-541-5596	11/19-21/91
R.T. Paul MVMA	~~300~~ New Ctr Det. MI 48202	313 872 4311	11/19/91
Rick Workentine Delta Environmental Consultants	6701 Carmel Road, Ste 200 Charlotte, NC 28226	(704) 541-9890	11/19-21/91
Marvin Branscome RTI	P.O. Box 12194 RTP, NC 27709	(919) 541-6956	11/19/91
Ana Hart Betz Laboratories	4636 Somerton Rd Trevose, PA 19053	215/ 355-3300	11/19-20
William Colby	6003 Chapel Hill Rd Raleigh, NC	8590232	11/19
JIM MCLARNEY AMER. HOSP ASSN.	840 N. Lake Shore Drive Chicago 60611	312 280 6144	11/20
Janet Marron MRI	401 Harrison Oaks Blvd Cary NC 27513	919 8770249	11/20

RECORD OF ATTENDANCE
NATIONAL AIR POLLUTION CONTROL TECHNIQUES ADVISORY COMMITTEE MEETING
NOVEMBER 19, 20, AND 21, 1991

PLEASE PRINT

NAME AND AFFILIATION	BUSINESS ADDRESS (INCLUDE ZIP CODE)	TELEPHONE NUMBER	DATE(S) ATTENDED
William E. Fisher Int'l. Fabricare Inst.	12251 Tech Rd Silver Spring, MD 20904	301 622-1900	Nov. 19, 1991
Daniel Uyesato Reichhold Chemicals	P.O. Box 13582 RTP, NC 27709	(919) 990-7874	Nov 19, 1991
Richard H. Vetter Burroughs Wellcome Co. PMA	3030 Cornwallis Rd. RTP, NC 27709	(919) 248-8654	11/19/91
D. Masarik M&T Harshaw	23800 Mercantile Beachwood, OH 44122	216 360-5021	11/19/91
David Cay	Res Triangle Inst P.O. Box 12194 RTP, NC 27709	(919) 541-6940	11/19/91
Frank Clay EPA	MD-14 27711 Research Triangle Park NC	919 541-5236	11/19/91
Jack Farmer	RTI P.O Box 12194, RTP, NC 27709	919-541 6909	11/19/91
Gil Wood	EPA MD-14 RTP, NC 27711	919-541 5544	11/19-21/91
Steve Risotto	Center for Emissions Control 1225 19th St NW Wash, DC 20036	202-785- 4374	11/19
Al Wehe	EPA MD-13 RTP, NC 27711	919-541 5623	11-19/11-21
MILT DEZUBE	American Hospital Assoc 50 F. St. NW, Suite 1100 Washington, DC 20001	202 626/2318	11-19/11-20
STEPHEN GOODSPEED	MEDX INC. PO BOX 025499 MIAMI FL 33102-5499	800 527-0666 X257	11-20
Carl Malmberg	Browning-Ferris PO Box 3151 Houston Texas 77253	713 580-7471	11/20
RICHARD BRADLEY	BESTECH INCINERATION RESOURCES 956 BROOKRIDGE DR. GARDENDALE, AL 35071	205 631-9892	11/20

RECORD OF ATTENDANCE
NATIONAL AIR POLLUTION CONTROL TECHNIQUES ADVISORY COMMITTEE MEETING
NOVEMBER 19, 20, AND 21, 1991

PLEASE PRINT

NAME AND AFFILIATION	BUSINESS ADDRESS (INCLUDE ZIP CODE)	TELEPHONE NUMBER	DATE(S) ATTENDED
Kevin Jameson ENSR Consulting & Eng.	35 Nagog Park Acton MA 01720	508 635 9500	11/19
Eugene Praschan MVMA	7430 Second Ave. Detroit MI 48202	313 872-4311	11/19-21
STEPHEN SAVAGE KOCH ENGINEERING.	365 Northridge Road Suite 200 ATLANTA, GA 30350	404 — 804 - 4595	11/19-21.
Robert McInnes ENSR	35 NAGOG PARK ACTON, MA 01720	508 635 9500	11/19
A. AZIM KHAN E³ INC.	1916 64th AVE. W TACOMA, WA 98466	(206) 565-2868	11/19.
Al Vervaert EPA	U.S. EPA (MD-13) RTP, N.C.	(919) 541-5602	11/19
Dean Kenyon Bosek, Gibson & Assoc	111 Bullard Pkwy Temple Terrace, FL 33617	813-985 34991	11/20
Harry Hadley BG WICKBERG CO	331 Newport Ave No Quincy MA 02171	617 328 9200	11/20
MIKE HOBI BECO ENGINEERING	P.O. BOX 443 OAKMONT, PA 15139	412 828 6080	11/20
Mike NETHERTON BURD & FLETCHER	321 W 7TH ST K.C., MO. 64105	816 842 1122	11/20
Steve Shuler WCEI (Joy Energy)	P.O. Box 410647 Charlotte, N.C. 28241	(704) 587-8025	11/20
Bill Wiley Consenar Systems Inc	PO Box 9379 Richmond Va 23227	(804) 746 4125	11/20
Barbara Bruschi Hallmark Cards	2501 McGee Kansas City Mo 64141	816 274-4348	11/20-21
TED BRNA US EPA ORD/AEERL	AEERL (MD-65) RTP, NC 27711	919-541-2683	11/20/91

RECORD OF ATTENDANCE
NATIONAL AIR POLLUTION CONTROL TECHNIQUES ADVISORY COMMITTEE MEETING
NOVEMBER 19, 20, AND 21, 1991

PLEASE PRINT

NAME AND AFFILIATION	BUSINESS ADDRESS (INCLUDE ZIP CODE)	TELEPHONE NUMBER	DATE(S) ATTENDED
Larry Doucet Doucet & Mainka, P.C.	1200 Brown St. Peekskill NY 10566	914 7360300	11/19
~~South Co~~			
Judy King	AFMA 918 16th ST. N.W. #402 WDC 20006	202- 466- 7362	
[illegible]	"	"	
Allen Irish	Natl Paint & Ctngs Assn, 1500 Rhode Isl. Ave NW Wash DC 20005	202- 462- 6272	20, 21 NOV
David Friedland Beveridge & Diamond	1350 I St NW Ste 700 DC 20005	202 789-6047	11/20/21
JEFF TELANDER	EPA	919 541 5427	11/20/91
Imelda Stamm	WI DNR P.O. Box 7921 Madison WI 53703	(608) 266-0244	11/20/91
C S Konheim Konheim & Ketcham	175 Pacific St Bklyn NY 11201	718 330-0550	11/20/91
Elaine Chang	SCAQMD	714-396- 3186	11/20-21
Max Batavia	2600 Bull St Columbia, S.C. 29201	803 749 0423	11/20/21
Foston Curtis	EPA MD-19 RTP NC 27711	(919) 541-1063	11/20/91
Mary C. DeLai Energy and Environmental Research	370 University Dr. Box 100 Durham NC 27707	489-1726	11/20/91

RECORD OF ATTENDANCE
NATIONAL AIR POLLUTION CONTROL TECHNIQUES ADVISORY COMMITTEE MEETING
NOVEMBER 19, 20, AND 21, 1991

PLEASE PRINT

NAME AND AFFILIATION	BUSINESS ADDRESS (INCLUDE ZIP CODE)	TELEPHONE NUMBER	DATE(S) ATTENDED
Chuck & Gloria SANDERSON KEMTURE, INC.	2015 S. CALHOUN ST, FORT WAYNE, IN 46802	219-456 3596	11/20/91
Lee W. Morris Engelhard Corp	101 Wood Ave Iselin, NJ 08830-0770	908 205 5379	11/20/91
Bill Johnson EPA	RTP, NC 27711	919 541-5245	11/20/91
GUY FORTIER RADIAN CORP.	PO BOX 13000 RTP, NC 27709	(919) 541-9100	11/19-20/91
John Robson EPA	RTP, NC 27711	919-541-5305	11/20/91
Bart Ferrero Radian	RTP	919-541-9100	11/20/91
John Williams Mobay Corp	Pittsburgh Pa 15205	412 777 4927	11/20-21 1991
Mary Moore RTI	RTP, NC 27709 P.O. Box 12194	(919) 541-7448	11/20
Mohamed SERAGELDIN EPA	RTP, NC 27711 (MD-13)	(919) 541-2379	11/20/91
J.L. ZBOROVSKY SUN CHEMICAL/GPI	631 CENTRAL AV. CARLSTADT, NJ 07072	(201) 933-4500	11/20/91
VALERIE V. HARRIS MIDWEST RESEARCH INSTITUTE	401 Harrison Oaks Blvd. Cary, NC	919 677-0249	11/20/91
DAVE REEVES MIDWEST RESEARCH	" "	"	"
CATHY NICHOLSON MIDWEST RESEARCH	" "	"	"
JOHN WINTER DUKE UNIVERSITY SCHOOL OF ENVIRONMENT	804 BERKELEY ST DURHAM, NC 27705	(919) 286-3100	11/20/91

RECORD OF ATTENDANCE
NATIONAL AIR POLLUTION CONTROL TECHNIQUES ADVISORY COMMITTEE MEETING
NOVEMBER 19, 20, AND 21, 1991

PLEASE PRINT

NAME AND AFFILIATION	BUSINESS ADDRESS (INCLUDE ZIP CODE)	TELEPHONE NUMBER	DATE(S) ATTENDED
Aurogy LAPIN CANA	115 S. LaSalle St Chicago, Il 60603	312-346-8111	NV-19+20
JOHN DENT RUST	100 CORPORATE PW BIRMINGHAM AL 35242	205-995-7227	N. 19+20
W. H. JOHNSON SHENANDOAH MFG. CO	PO BOX 839 HARRISONBURG, VA 22801	703-434-3838	NOV. 20
W. S. LANIER BBR CORP	3710 UNIVERSITY DR BOX 100 DURHAM N.C.	919 489-1726	NOV. 20
JOSEPH F. LENNON FORD MOTOR COMPANY	15201 CENTURY DRIVE CPN - SUITE 608 DEARBORN, MICH. 48121	(313) 322-1227	NOV. 20
WILSON CUNNINGHAM American Newspaper Publishers Assoc	11600 SUNRISE Valley DR RESTON Va 22091	(703) 648-1188	NOV 20
NICK MAOLONI THE SHERWIN-WILLIAMS CO,	101 PROSPECT AVE, NW CLEVELAND, OH 44115	(216) 566-2182	Nov. 19, 20, 21
Todd Johnson HealthTech	8701 Mallard Creek Rd CLT, NC 28207		
David Cole US EPA	US EPA OAQPS (MD-15) RTP, NC 27711	919-541-5565	11-20, 11-21
CANDACE BLACKLEY RADIAN CORP.	P.O. BOX 13000 RTP, NC 27709	919-541-9100	11-20
Joan S. McLean Radian Corporation	PO BOX 13000 RTP NC, 27709	919-541-9100	11/20
A. AZIM KHAN E3, Inc	1918 64th Ave. W TACOMA, WA 98466	206 565-2868	11/20
Susan Y. Clayton Radian Corp.	P.O. BOX 13000 RTP, NC 27709	919 541-9100	11/20
Ronald Wojcik Olin	350 Knotter Cheshire CT 06410	203-271-4146	11/20-11/21

RECORD OF ATTENDANCE
NATIONAL AIR POLLUTION CONTROL TECHNIQUES ADVISORY COMMITTEE MEETING
NOVEMBER 19, 20, AND 21, 1991

PLEASE PRINT

NAME AND AFFILIATION	BUSINESS ADDRESS (INCLUDE ZIP CODE)	TELEPHONE NUMBER	DATE(S) ATTENDED
Suzanne Sholaka Midwest Research Inst	401 Harrison Oaks Blvd Suite 350 Cary NC 27513	919- 677-0249	11/20
Thomas Holloway Midwest Research Institute	"	"	"
Taylor Beard EERC	3710 Univ Dr, Box 100 Durham NC 27707	919 489-1716	11/20
Greg Peters General Motors	30400 Mound Rd Warren MI 48090-9015	313 947-1869	11/20
Anupom Ganguli South Coast A.Q.M.D.	21865 Copley Drive Diamond Bar, CA 91765	(714) 396-3185	11/20
Raymond E. Raab Raab Associates	3235 Indian Walk Mechanicsville, Pa 18934	215- 794-7605	11/20/21
Glenn Osmond Radian Corp.	3200 E. Chapel Hill Rd RTP NC 27709	919 541 9100	11/20 11/21
Richard C. Peters Steelcase Inc	PO Box 1389 Fletcher NC 28732	(704) 687-4676	20/11 21/11
John Silvasi EPA/OAQPS/ACMD	MD-15 RTP NC 27711	919 541-5660	11/20/91 – 11/21/91
Carol Kemker EPA/Region IV	345 Courtland St. NE Atlanta, GA 30365	(404) 347-2864	11/20/91 11/21/91
Jack Bracco McBay Corp	McBay Road Pittsburgh, Pa 15205	412 777-2876	11/20/91
Darcy Campbell Radian Corp	1350 E. Chapel Hill St. Research Triangle Pk NC	919 541-9100	11/20 11/21
A.D. Shendrikar Litho Industries Inc	P.O. Box 30069 Raleigh NC 27622	919 782-1314	11/20
Nick Roman Rohm + Haas Co	Independence Mall West Phila Pa 19105	215 592-2862	11/20, 21

RECORD OF ATTENDANCE
NATIONAL AIR POLLUTION CONTROL TECHNIQUES ADVISORY COMMITTEE MEETING
NOVEMBER 19, 20, AND 21, 1991

PLEASE PRINT

NAME AND AFFILIATION	BUSINESS ADDRESS (INCLUDE ZIP CODE)	TELEPHONE NUMBER	DATE(S) ATTENDED
Gary A Jones Graphic Arts technical Foundation	4615 Forbes Ave Pgh, PA 15213-3796	412-621-6941	11/20
MARK J. NUZZACO ENVIRONMENTAL CONSULTANT BOARD	1899 PRESTON WHITE DR. RESTON, VA. 22091	703/ 648-3218	11/20
C. Wm. SCHNEIDEREITH ENVIR. CONSER. BD.	2905 WHITTINGTON AV. BALTIMORE, MD 21230	(410) 525-0300	11/20/91
Lawrence J Belton Thomasville Furniture	Box 339 Thomasville NC	919 476-2134	11/21/91
Ron Tucker Guardsman Products	2147 Brevard Rd High Point NC 27261	(919) 889-6344	11/21/91
JEFF GOAD UNION CARBIDE	3200 KANAWHA BLVD. SOUTH CHARLESTON, WV 25303	(304) 747-4549	11/21/91
~~[illegible]~~			
Bill DORRIS Lilly Ind. Ctgs	P.O. 2358 High Point, N.C. 27261	919- 889-2157	11/21/91
THAYER WEST UNION CARBIDE	39 OLD RIDGEBURY RD DANBURY, CT 06817	203 749 2737	11/21/91
CARL WEBB VB/WILLIAMS FURN CO.	602 FULTON ST SUMTER, S.C	803 775- 7311	11/21/91
[illegible]	AKZO COATINGS PO BOX 2124 HIGH POINT N.C.	919 884 5111	11/21/91
SCOTT TARBELL Cargill	Cargill 71 Barnett Rd Forest Park, GA 30050	(404) 434- 4820	11/21/91
Michelle Ramsey Midwest Research Institute	401 Harrison Oaks Blvd Suite 350 Cary, NC 27513	(919) 677- 0249 X5478	11/21
Lee W. Morris Engelhard Corp	101 Wood Ave Iselin, NJ 08830-0770	908 205 5379	11/21

RECORD OF ATTENDANCE
NATIONAL AIR POLLUTION CONTROL TECHNIQUES ADVISORY COMMITTEE MEETING
NOVEMBER 19, 20, AND 21, 1991

PLEASE PRINT

NAME AND AFFILIATION	BUSINESS ADDRESS (INCLUDE ZIP CODE)	TELEPHONE NUMBER	DATE(S) ATTENDED
Dr. William D. Schaeffer Graphic Arts Tech. Fndtn.	4615 Forbes Ave. Pittsburgh, Pa 15213	(412) 621-6941	11/20/91
James E. Renson Nat'l Assn of Printing Ink Makers	47 Halstead Ave Harrison NY 10528	914- [illegible]	11/21/91
Michael R. Lefkow R.R. Donnelley + Sons Co.	2223 King Drive Chicago, IL 60616	312-326-8019	11/20/91
Jack Farmer RTI	PO Box 12194 RTP NC 27709	919-541-6909	11/20/91
Paul L. Martin Superior Water Cond.	4400 W 93rd St Prairie Village Ks 66207	(913) 381-1659	11/20/91
JON PARISH THE LANE COMPANY	P.O BOX 151 ALTAVISTA, VA. 24517	804 369-3675	11-21-91
George Griffin Thomasville Furn. Fnd.	P.O. 339 Thomasville N.C. 27361	919 476-2219	11-21-91
Andrew Riedell PPG Industrys	7601 Business Park Dr. Greensboro NC 27409	919 668 3780	11-21-91
Dick Titus KLMA	1899 Preston White Drive Reston, Va. 22091-4324	703 264-1690	11/21/91
TOM ELLIS CLASIC SYSTEMS	PO Box 6130 STATESVILLE, NC 28677	704 878-9523	11-21-91
RICHARD HAMILTON ON-DEMAND ENVIRONMENTAL	605 ASBURY ST 95110 SAN JOSE CA	408-287-7012	11/21/91
Gary Shore Chemical Coatings, Inc.	P.O. Box 669 Hudson, NC	704-728-8266	11-21-91
Steve Koehler Aqualon Co.	136 ROQUEMORE RD CLEMMONS NC 27012	919 766-9770	11/21/91
Kevin Jameson ENSR Consulting Engineering	35 Nagog Pk Acton MA 01720	508 635 9500	11/21/91

RECORD OF ATTENDANCE
NATIONAL AIR POLLUTION CONTROL TECHNIQUES ADVISORY COMMITTEE MEETING
NOVEMBER 19, 20, AND 21, 1991

PLEASE PRINT

NAME AND AFFILIATION	BUSINESS ADDRESS (INCLUDE ZIP CODE)	TELEPHONE NUMBER	DATE(S) ATTENDED
[illegible]	790 N. SHORE LAKE BLUFF, IL	708 295 1331	
Ellen Ducey	EPA, MD-13 RTP, NC 27711	(919) 541 X5408	11-20/21
Heather Brown	Radian Corp BOX 13000 RTP, NC 27709	(919) 541 -9100 X 3860	11/20
Andrew Trenkhold	MRI	919 677-0249	11/20
Ron Morgan	Litho Industries P.O.B. 30069 Raleigh NC 27622	919 782-1314	11/20-21
RICH CARMAN	TEC SYSTEMS P.O. BOX 30 DE PERE, WI 54115	414-337-1450	20-NOV-91
Susan Rasor	MRI	919 677-0249	11/21/91
Jim Bohannon	Valspar Corp	919 8874658	11-21-91
Fred Watson	" "	919 8874657	11-21-91
Larry Runyan	Am. Furn. mfgr. Assoc.	919 884-5000	11/21
Dale E. Wolfe Sirrone Environmental Consultants	3733 National Dr. Suite 120 Raleigh, NC 27612	919 881-0777	11/21
Bill [illegible] Furn.	P.O. Box 3431 Martinsville, Va 24115	703 632-2164	11/21
DAN LITTLE THOMASVILLE FURN. IND	PO BOX 360 THOMASVILLE NC 27360	919-472-4003	11/21
JIM JOHNSON THOMASVILLE FURN INDS	P.O. BOX 339 THOMASVILLE NC 27360	919-472-4000	11/21

RECORD OF ATTENDANCE
NATIONAL AIR POLLUTION CONTROL TECHNIQUES ADVISORY COMMITTEE MEETING
NOVEMBER 19, 20, AND 21, 1991

PLEASE PRINT

NAME AND AFFILIATION	BUSINESS ADDRESS (INCLUDE ZIP CODE)	TELEPHONE NUMBER	DATE(S) ATTENDED
BOB INGLIS BASF CORP.	19855 W. OUTER DR. SUITE 401 EAST DEARBORN MI 48124	313- 561-9100	11-20/21
JERRY BENDER RR DONNELLEY & SONS	750 WARRENVILLE RD Lisle IL 60532	708-719-6705	11/20-11/21
John Dege EI DuPont	Orange St Wilmington DE 19898	3027734229	11/21
BOB KING JISC/AFMA/NPCA	6095 CORAL VIEW HARRISBURG, NC 28075	704 455-9025	11/21
[illegible]	AFMA 918 16th St NW DC 20006	202 466-7322	11-20-21
Sherry Stokey Thomasville Furn	P.O. Box 339 Thomasville, NC 27361-0339	919 476 2264	11-21-91
DON WIESMAN ~~RCE~~ AKZO-RELIANCE	1431 PROGRESS ST. P.O. BOX 2124 HIGH POINT, NC 27261	919 841-5111	11-21-91
BILL SALE Broyhill Furn Inds	ONE Broyhill Park LENOIR NC 28633	704 7583111	11-21-91
Doug Lo Greenhaus Nat. Auto. Dealers Assoc	8400 Westpark Dr. McLean, VA 22102	703- 821-7040	11/21/91
Dave Brookman Classic Systems	P.O. Box 6130 Statesville, NC 28677	(704) 878-9523	11/21/91
Chris Van Lith ClairTech	P.O. box 8022 3503 RA Utrecht Holland	31 (3406) 21200	11/21/91
Chris Andrews WOODSTOFF MFG INC	1635 South 43rd Ave Phoenix, AZ 85005	(602) 269-5811	11/21/91
Frank Koenig Sherwin Williams	113 Stage Coach Trail Greensboro NC 27410	919 292 3000	11-21-91
Tom Kelly Colonial Pipeline Company	Colonial Pipeline Co P.O. Box 18855 Atlanta, GA 30326-0855	404/841-2399	11/21/91

RECORD OF ATTENDANCE
NATIONAL AIR POLLUTION CONTROL TECHNIQUES ADVISORY COMMITTEE MEETING
NOVEMBER 19, 20, AND 21, 1991

PLEASE PRINT

NAME AND AFFILIATION	BUSINESS ADDRESS (INCLUDE ZIP CODE)	TELEPHONE NUMBER	DATE(S) ATTENDED
ALAN RICHARDSON THOMASVILLE FURN IND.	P.O. BOX 339 THOMASVILLE NC 27360	472-4000	11/21
Harlan PYGMAN Cargill Inc.	2301 Crossby Road Wayzata, MN 55391	612 475 6291	11/21
JOHN HUTTER PROFESSIONAL CO	225 FOSTER BENSENVILLE IL	708 595 -0800	11/21
GREG OCAMPO SHERWIN-WILLIAMS	101 PROSPECT AVE NW CLEVELAND OH 44115	(216) 566-2027	11/21
RON HILOVSKY PPG INDUSTRIES	3800 W. 143RD ST. CLEVELAND, OH. 44111	(216) 671-7152	11/21
BRENDA SHINE MRI			11/21
Jeff Porter MRI			11/21
L R HARRIS	Society of the Plastics Industry 1275 K ST NW, WASH, DC 20005	202 371-5217	11/19-21
Terry Potter	Mobay Corp Mobay Rd. Pgh, PA	412 777 3461	11/20-21
ANDY H BAREFOOT	Northside Auto Body Raleigh NC.	919 872-1146	11/21/91
SUSAN PERRY BIFMA	2335 BURTON SE GRAND RAPIDS MI	616-243-1681	11/21/91
Robert C. McCrillis	US EPA MD-61 RTP, NC 27711	919 541-2733	11/21
Leslie B Evans	US EPA MD-13	541 5410	
ROBERT SNYDER	MIDWEST RESEARCH INST.	677-0249	11/21 PM

RECORD OF ATTENDANCE
NATIONAL AIR POLLUTION CONTROL TECHNIQUES ADVISORY COMMITTEE MEETING
NOVEMBER 19, 20, AND 21, 1991

PLEASE PRINT

NAME AND AFFILIATION	BUSINESS ADDRESS (INCLUDE ZIP CODE)	TELEPHONE NUMBER	DATE(S) ATTENDED
MARK BERKMAN NATIONAL ECONOMIC RESEARCH ASSOCIATES	101 CALIFORNIA ST SUITE 2000 SF CA 94111	415 291 1000	11/19 + 11/21
Bruce Maderious US EPA	RTP NC 27711 (MD-13)	(919) 541-5290	11/21
Eric Soderberg Radian Corp	PO Box 13000 RTP, NC 27709	(919) 541-9100	11/21
MICHAEL V. DUORCHAIC MOBAY CORP	MOBAY ROAD, Bldg #8 Pittsburgh, PA 15205-9741	412 777-2877	11-20 11-21
Rick Moseley Hickory Chair Co	P.O. Box 2149 Hickory NC 28601	(704) 328-1801	11-21
DOUG BRACKEN AF.M.A.	Box HP 7 HS Point NC 27261	919 884 5000	
MIKE SOOTS KINCAID FURNITURE	P.O. Box 605 Hudson N.C.	704 728 3261	11-21
W.L. WAGNER PETREX INC	2349 DORCON RD 28638 WARREN PA 16365	814 723 2050	11.21.91
F.L. Blumquist Petrex, Inc	" "	"	"
JACK FARMER RTI	POX 12194 RTP, NC 27709	919-541-6909	11/21/91
Terri Ranganath EI du Pont de Nemours	P.O. Box 6090 Newark DE 19714	302 366-4191	"

RECORD OF ATTENDANCE
NATIONAL AIR POLLUTION CONTROL TECHNIQUES ADVISORY COMMITTEE MEETING
NOVEMBER 19, 20, AND 21, 1991

PLEASE PRINT

NAME AND AFFILIATION	BUSINESS ADDRESS (INCLUDE ZIP CODE)	TELEPHONE NUMBER	DATE(S) ATTENDED
Charlie Hale MRI			11/21
Paul Stittmatter Safety-Kleen Corp	PO Box 92050 Elk Grove Village IL 60007-2050	(312) 694-2700	11/21
Vicki Boothe EPA/ESD	MD 13 RTP NC 27711	541-0164	11/19-21
Karen Catlett EPA/ESD	MD-13 RTP-NC 27711	541-0835	11/19-21
Bill Johnson EPA	RTP, NC 27711 MD-15	541-5205	11/21/91
Jamie Whitfield AEERL EPA GECD/OCB	MD-61 RTP, NC 27711	541-2509	11/22/91
Gene Smith	EPA, MD-13 RTP, NC 27711	541-5439	11/19-21/91

RECORD OF ATTENDANCE
NATIONAL AIR POLLUTION CONTROL TECHNIQUES ADVISORY COMMITTEE MEETING
NOVEMBER 19, 20, AND 21, 1991

PLEASE PRINT

NAME AND AFFILIATION	BUSINESS ADDRESS (INCLUDE ZIP CODE)	TELEPHONE NUMBER	DATE(S) ATTENDED
Arvin D. Shendrikar Delta Industries Inc	P.O. Box 30069 Raleigh NC 27622	(919) 782-1314	10/29/91
David Mauderwadt EPA	MD-13 RTP, N.C. 27711	919 541-0837	11/21/91
MARK MORRIS EPA	MD-13 RTP, NC 27711	(919) 541-5418	11/21/91
Valentina V. deOllogui MRI	Ste. 350, 401 Harrison Oaks Blvd Cary, NC 27513	677-0249	11/21/91
Robin Barker MRI	"	"	"

RECORD OF ATTENDANCE
NATIONAL AIR POLLUTION CONTROL TECHNIQUES ADVISORY COMMITTEE MEETING
NOVEMBER 19, 20, AND 21, 1991

PLEASE PRINT

NAME AND AFFILIATION	BUSINESS ADDRESS (INCLUDE ZIP CODE)	TELEPHONE NUMBER	DATE(S) ATTENDED
Maresa Williamson	Midwest Research Institute 401 Harrison Oaks Blvd Cary	677-0249	11/21
Chris Demoron CTSWD's Inc	8813 Ice Drive Raleigh, NC 27613	919 781 3637	11/21
Ron Schuwangzedt Crown Metro	PO Box 5857 Greenville, SC 29606	803-299-1331	11/21
Mary Jane Clark	U.S. EPA (MD-13) RTP, NC 27711	919 541-0386	11/19-21/91

NATIONAL AIR POLLUTION CONTROL TECHNIQUES ADVISORY COMMITTEE

MINUTES OF MEETING

NOVEMBER 19-21, 1991

Prepared by:

Gene W. Smith
Office of the Director
Emission Standards Division

I certify that, to the best of my knowledge, the foregoing minutes and attachments are complete and accurate.

Bruce C. Jordan, Chairperson
National Air Pollution Control Techniques
Advisory Committee

☆U.S. Government Printing Office 1992 312-014/40042