EPA-460/3-74-011

July 1974

A STUDY OF THE DIESEL AS A LIGHT-DUTY POWER PLANT

U.S. ENVIRONMENTAL PROTECTION AGENCY
Office of Air and Waste Management
Office of Mobile Source Air Pollution Control
Emission Control Technology Division
Ann Arbor, Michigan 48105

EPA-460/3-74-011

A STUDY OF THE DIESEL AS A LIGHT-DUTY POWER PLANT

by

M. L. Monaghan, C. C. J. French, and R. G. Freese

Ricardo and Company Engineers (1927) Ltd.
Bridge Works
Shoreham-by-Sea, Sussex BN 45FG

Contract No. 68-03-0375

EPA Project Officers:

T. C. Austin, J. J. McFadden, and K. H. Hellman

Prepared for

U.S. ENVIRONMENTAL PROTECTION AGENCY
Office of Air and Waste Management
Office of Mobile Source Air Pollution Control
Emission Control Technology Division
Ann Arbor, Michigan 48105

July 1974

This report is issued by the Environmental Protection Agency to report technical data of interest to a limited number of readers. Copies are available free of charge to Federal employees, current contractors and grantees, and nonprofit organizations - as supplies permit - from the Air Pollution Technical Information Center, Environmental Protection Agency, Research Triangle Park, North Carolina 27711; or, for a fee, from the National Technical Information Service, 5285 Port Royal Road, Springfield, Virginia 22151.

This report was furnished to the Environmental Protection Agency by Ricardo and Company Engineers (1927) Ltd., in fulfillment of Contract No. 68-03-0375. The contents of this report are reproduced herein as received from Ricardo and Company Engineers (1927) Ltd. The opinions, findings, and conclusions expressed are those of the author and not necessarily those of the Environmental Protection Agency. Mention of company or product names is not to be considered as an endorsement by the Environmental Protection Agency.

Publication No. EPA-460/3-74-011

CONTENTS

SECTION 1 EXECUTIVE SUMMARY

SECTION 2 INDEX AND LIST OF FIGURES

SECTION 3 GENERAL SUMMARY AND INTRODUCTION

SECTION 4 LITERATURE SURVEY, ASSESSMENT OF PROBLEM AREAS AND TRADE OFFS

SECTION 5 ENGINE CONFIGURATION STUDY

SECTION 6 POWER PLANT RATING

SECTION 7 PROGRAMME PLANS

SECTION 8 APPENDIX 1 - LIST OF KEYWORDS

SECTION 9 APPENDIX 2 - LIST OF REFERENCES

SECTION 10 APPENDIX 3 - GLOSSARY OF TERMS

THE DIESEL ENGINE AS A LIGHT DUTY POWER PLANT

SECTION 1
EXECUTIVE SUMMARY

Introduction

In America today the gasoline engine is virtually the only engine used for light duty purposes due to its low initial cost and refined performance. However, current and proposed legislation and the prospect of increased fuel costs may render the low emissions gasoline engine less attractive than some of the other available power plants.

In other parts of the world the diesel engine, which is the most efficient practical engine produced today and which has good emissions characteristics, has long been used as a light duty power plant in applications where fuel economy and durability are of great importance. The lightweight, high speed diesel has been developed specifically for European and Japanese conditions while low fuel costs have until now prevented any major effort being expended on a light duty engine for America.

The purpose of this study was to see if the diesel engine could be used as a viable power plant for an American passenger car. It was felt necessary to carry out the study because European effort has tended towards the lighter weight European vehicles while American effort has been towards meeting legislative limits with the gasoline engine while retaining traditional performance standards.

Proposed legislation indicates that a light duty vehicle for the near future should be able to meet emissions targets of :-

HC	0.41 g/mile
CO	3.4 g/mile
NO_x	1.5 g/mile

when tested by the CVS-CH procedure.

A light duty vehicle for longer term application should be able to meet emissions targets of :-

HC	0.41 g/mile
CO	3.4 g/mile
NO_x	0.4 g/mile

For the purposes of this study the vehicle considered was a 4/5 seat sedan with a loaded weight of about 1600 kg (3500 lb), capable of 0 - 97 km/h (0-60 mph) in 13.5 s and 32-113 km/h (20-70 mph) in 15 s, i.e. a compact size sedan but with 'standard' performance capabilities.

The first phase, a literature survey, involved a study of all existing light duty and relevant heavy duty diesel literature from published sources in Europe, America, Japan and also from Ricardo in-house technical reports. Visits to diesel manufacturers and users were also made. At the end of this phase, broad conclusions on the feasibility and likely problem areas of an American light duty diesel could be made.

The next phase required that brief design studies be made to cover all the potentially viable diesel power plants. This involved the calculation of performance and outline design of any type of diesel which could power the target vehicle in the above emissions climate.

For the third phase a rating methodology was derived which allowed a numerical comparison of all the potentially viable power plants to be made.

The fourth and final phase of the study involved a consideration of the results of the previous sections in order to make recommendations for further action and effort to achieve the most desirable light duty vehicle. Although these recommendations were to be aimed mainly at light duty use, other areas uncovered in the course of the study were not specifically excluded.

Conclusions

On completion of the study the following broad conclusions were drawn :-

1. A diesel powered passenger car could be built using present technology.

   It would have equal acceleration and general performance to typical gasoline powered passenger cars.

   The noise level would be perfectly acceptable and in fact would be less than 1 dBA greater than a gasoline powered vehicle in an S.A.E. drive-by test.

   The engine would be hardly any larger than the equivalent V-8 gasoline engine and would weigh only 68 kg (150 lb) more.

   There would be very little if any visible smoke under normal driving conditions.

   The diesel powered vehicle would meet the primary emission targets without the use of catalysts or other special equipment.

   The diesel powered vehicle will deliver up to 50% greater fuel economy than the equivalent gasoline powered vehicle, depending on the driving cycle.

2. The study indicates that a diesel powered vehicle could not meet the secondary emissions target of 0.4 g/mile NO_x if the target vehicle and performance standards are adhered to and if current technology is assumed.

   Virtually no work has been carried out to determine the emissions capabilities of the light duty diesel for these secondary targets. More basic research is required to determine the ultimate emissions potential of the light duty diesel.

   It would seem that a diesel powered vehicle could meet a 1.0 g/mile NO_x standard with the use of modulated exhaust gas recirculation but lower standards than 1.0 g/mile would require a reduction in vehicle performance and/or weight.

Recommendations

As a result of the study the following recommendations were made :-

1. A V-8 97 kW(130 bhp) naturally aspirated indirect injection diesel engine should be constructed and demonstrated in a 4/5 seat sedan.

2. A 6 cylinder indirect injection diesel engine should be built and work carried out with the engine to investigate the application of turbo-chargers and "Comprex" pressure exchangers to automotive engines.

3. Advanced fuel injection systems could help to bring about further reductions in pollutants and make it possible to use the direct injection diesel as a possible automotive power plant, while novel forms of construction may allow some reduction in the cost of fuel injection equipment. Thus work should be pursued on advanced and novel forms of fuel injection equipment.

4. A thorough investigation should be made of the potential of the low compression ratio, ignition assisted, indirect injection diesel engine in view of its possible fuel economy advantages.

5. A fundamental investigation should be carried out into the formation of unburnt hydrocarbons in diesel engines. The development of a catalyst for control of hydrocarbons is also desirable.

6. Work should be initiated to develop control systems for load and speed modulation of exhaust gas recirculation.

7. Work on the development of improved starting aids such as 'instant' glow plugs and programmed starting sequences should be carried out.

8. The clear superiority of the diesel for such specialised applications as taxi cabs and light delivery vehicles indicates that a programme to demonstrate and encourage the conversion of these vehicles to diesel power should be instituted.

9. An investigation into particulate formation in the diesel engine should be carried out together with the development of smoke and particulate traps.

Literature Study

Current light duty diesel experience is mainly concerned with European type vehicles and thus the literature study was carried out to indicate the feasibility of the diesel engine for American light duty use and the likely problem areas and possible trade-offs if it were adopted.

The survey covered the period 1919 to the present day although the great bulk of the literature studied was published in the period 1950 to the present. A key-word indexing system was devised so that pertinent points could be extracted easily from the literature and so that data relevant to a particular point could be assembled quickly and thoroughly. Sources of information in this section of the study were proceedings of learned societies, technical journals, Ricardo published information, Ricardo unpublished information and discussions with manufacturers and users of light duty diesel engines.

The overall conclusion of the literature study was that the diesel engine is a potentially viable power plant for the target vehicle and that it could meet the primary emissions targets without the use of a catalyst.

Specific conclusions on various performance aspects were as follows :-

Smoke - The target vehicle should emit very little visible smoke and under normal driving conditions there should be virtually none.

Odour - Simple timing controls should minimise the slight odour of the high speed diesel under light load conditions while the use of an indirect injection combustion chamber and the proposed restricted power rating should minimise the full load odour.

Gaseous Emissions - A naturally aspirated indirect injection engine capable of powering the prototype vehicle should be able to meet the primary emissions targets of 0.41 g/mile HC, 3.4 g/mile CO and 1.5 g/mile NO_x without the use of catalysts, although some small amount of exhaust gas recirculation may be required to ensure sufficient margin for production compliance. The secondary target of 0.4 g/mile NO_x could not be achieved with current technology if the target vehicle size and power to weight ratios are assumed. The use of conventional direct injection systems would make it difficult to meet both NO_x and CO standards while the injection timing retard required would cause high HC levels.

Particulates - The diesel, like all engines employing heterogeneous combustion, emits more exhaust particulates than the gasoline engine, but neither the effect of particulates on health nor the importance of the nature of particulates is known at present. Filter systems could probably remove diesel particulates if necessary.

Noise - Attention to engine and vehicle design would make the diesel passenger car perfectly acceptable. Drive-by noise levels would be only slightly higher (1 or 2 dBA) than the gasoline powered vehicles. Idling noise can be annoying with current diesel engined vehicles but it is unlikely to be a significant cause for complaint with the target vehicle.

Volume - The volume of the diesel engine will be greater than that of the equivalent highly rated gasoline engine, but there should be no installation problems in the target vehicle.

Weight - A 97 kW (130 bhp) diesel engine may be 136 kg (300 lb) heavier than a highly rated gasoline engine of the same power output but only about 68 kg (150 lb) heavier than a more normal and lower rated gasoline engine.

Fuel Economy - The diesel engine is undoubtedly the most efficient current prime mover for light duty use and in city conditions the fuel consumption advantage may be as much as 50% (twice the miles per gallon).

Fuel - The increasing cost of fuel makes the high economy diesel more attractive and there should be no difficulty in increasing the quantity of automotive diesel fuel.

First Cost - The diesel engine will cost between 1.5 and 2 times as much as the gasoline engine in America (i.e. $ 300 against $ 200 production cost) and about half of the cost increase is due to the fuel injection equipment.

Maintenance - Longer periods between overhauls and the similar nature of the maintenance requirements to those of the gasoline engine will mean that overall maintenance costs will be less for the diesel powered vehicle.

Starting - Starting is inferior to the gasoline engine but the maximum delay with heater plugs will be 30 seconds.

Hot Driveability - The hot driveability of the diesel engine will be very similar to that of the gasoline engine and no major transmission changes will be required.

Cold Driveability - The cold driveability of the diesel engine will be as good as its hot driveability and very much superior to the gasoline engine.

Torque Rise - The torque rise of the diesel engine will be similar to that of the gasoline engine.

Durability - The diesel engine will have greater durability than its gasoline counterpart.

Coolant Heat Loss - The diesel has reduced heat loss at low load and idle so that 'slow speed traffic overheating' will not be a problem although winter morning de-icing may be more difficult. The increased heat losses at full load may dictate the use of a larger radiator, although this may only be required for trailer-towing vehicles.

Vibration and Torque Recoil - The unthrottled, high compression ratio diesel undoubtedly vibrates more than the gasoline engine especially at idle. This tends to give an impression of harshness with current vehicles but this impression disappears once the vehicle is in motion. The problem can be minimised by careful attention to engine and transmission mountings.

Manufacture - The similarities between diesel and gasoline engines allow them to be made on the same production lines if necessary although the diesel engine does require closer control of tolerances.

Ancillaries - Ancillaries are similar and often identical to those of the gasoline engine.

Production techniques for the high volume production of conventional fuel injection equipment have already been developed but there may be scope for cost reductions with greater production numbers.

Lubrication - The diesel engine requires oils with greater dispersant and anti-corrosive qualities than does the gasoline engine.

Engine Configuration Study

The literature study and Ricardo in-house knowledge indicated that a diesel engine could provide a viable power plant for a passenger car and thus the study required that all potentially viable diesel variants be designed in sufficient detail to allow their likely performance to be assessed realistically. The vehicle to be powered by any of the candidate power plants was a 4/5 seat sedan weighing less than 1600 kg (3500 lb), and capable of meeting the EPA standard car performance specifications, i.e. 0 - 97 km/h (0-60 mph) in less than 13.5 s., 32 - 113 km/h (20 - 70 mph) in less than 15 s and capable of overtaking a 80 km/h (50 mph) truck in less than 15 s. The emission targets were :-

Primary (or short term)

HC	0.41 g/mile
CO	3.4 g/mile
NO_x	1.5 g/mile

Secondary (or long term)

HC	0.41 g/mile
CO	3.4 g/mile
NO_x	0.4 g/mile

and were to be obtained when the vehicle was tested according to the CVS-CH procedure. Computer calculations indicated that a 3-speed automatic gear box would require an installed power of approximately 97 kW (130 bhp) for engines with normal torque characteristics, and thus all the diesel power plants were designed with this in mind.

While no specific gasoline configuration exercise was required, two gasoline engines were studied to provide a basis for comparison with the diesel engine types.

The diesel engine types considered covered all of the major combustion systems, all likely engine configurations and operating cycles (e.g. 4 stroke, rotary, turbo-compound) and different possible installations (e.g. air-cooled, water-cooled), but the only ones schemed in detail for this study were those engine configurations and types which were considered at all suitable for passenger car application.

The following paragraphs summarise the results of the configuration study while Table 1 shows some of the more important engine parameters for the diesel engines.

		V8 Gaso-line	IL6 Gaso-line	V8 NA IDI	V6 TC IDI	In Line 6 TC IDI	V6 TC DI	In Line 6 TC DI	V6 2 Stroke Loop IDI	In Line 6 2 Stroke Uniflow DI	4 Cyl. Compound DI	2 Rotor 2 Stage Rotary
Bore	mm	97	88	88	90	90	93	93	99	83	93	-
	in	3.82	3.46	3.46	3.54	3.54	3.66	3.66	3.89	3.28	3.66	-
Stroke	mm	76	82	98	100	100	94	94	114	114	93	-
	in	3.00	3.22	3.86	3.94	3.94	3.70	3.70	4.50	4.50	3.66	-
Power	kW	96	96	96	96	96	96	96	96	96	96	96
	hp	128	128	128	128	128	128	128	128	128	128	128
Swept Volume	litre	4.5	2.99	4.78	3.84	3.84	3.84	3.84	5.25	3.74	2.52	-
	in^3	275	183	292	234	234	234	234	320	228	153	-
Weight	kg	250	186	320	309	327	300	310	340	365	305	227
	lb	550	410	700	680	720	660	680	760	800	670	500
Box Volume	m^3	-	-	0.32	0.33	0.36	0.31	0.34	0.36	0.47	0.32	0.26
	ft^3	-	-	11.2	11.6	12.7	11.0	12.0	12.7	16.8	11.3	9.2
Specific power-swept volume	kW/l	21.3	32.11	20.2	24.4	24.4	24.4	24.4	18.3	26.0	38.0	-
	hp/in^3	0.47	0.70	0.44	0.55	0.55	0.55	0.55	0.40	0.57	0.83	-
Power/unit piston area	kW/mm^2	-	-	0.0020	0.0025	0.0025	0.0023	0.0023	0.0021	0.0029	0.0035	-
	hp/in^2	-	-	1.70	2.15	2.15	2.03	2.03	1.82	2.52	3.04	-
Specific power-box volume	kW/m^3	-	-	302	291	265	306	280	265	201	299	368
	hp/ft^3	-	-	11.4	11.05	10.1	11.6	10.7	10.1	8.0	11.3	13.9
Specific weight - swept volume	kg/l	55.6	60.2	66.9	80.9	85.6	78.5	80.7	65.7	98.4	120.6	-
	lb/in^3	2.00	2.19	2.41	2.91	3.08	2.83	2.91	2.37	3.55	4.34	-
Specific weight - power	kg/kW	2.60	1.87	3.31	3.22	3.41	3.12	3.22	3.59	3.78	3.17	2.36
	lb/hp	4.30	3.12	5.47	5.31	5.62	5.16	5.31	5.93	6.25	5.23	3.91

SUMMARY TABLE OF MAJOR CHARACTERISTICS OF POWERPLANTS CONSIDERED IN ENGINE CONFIGURATION STUDY

TABLE 1

1. V-8 Gasoline Engine

8 cylinders 97 mm x 76 mm (3.82" x 3.00")
4.5 litre (275 CID)
96 kW (128 bhp) at 66.7 rev/s
290 N.m (210 lb.ft) at 41.6 rev/s
250 kg (550 lb) estimated weight

For the primary emissions target (1.5 g/mile NO_x) the engine would require sophisticated close tolerance carburettors, modulated exhaust gas recirculation, air injection into the exhaust manifold and an oxidation catalyst in the exhaust system.

For the secondary emissions target (0.4 g/mile NO_x) a reducing catalyst and a further catalytic device 'getter box' or some similar system would be needed.

In primary emissions build, fuel consumption would be approximately 18 l/100 km (13 mpg) over the CVS-CH cycle while the need to run closer to stoichiometric in the secondary emissions build would reduce this to 19 l/100 km (12.5 mpg).

Drive-by noise level would be 74 dBA under US Federal Test conditions.

2. In-Line Gasoline Engine

6 cylinders 88 mm x 82 mm (3.46" x 3.23")
3 litre (183 CID)
96 kW (128 bhp) at 83.3 rev/s
236 N.m (171 lb.ft) at 50 rev/s
186 kg (410 lb) estimated weight

For the primary emissions targets the engine would be equipped with gasoline injection, modulated exhaust gas recirculation, air injection into the exhaust manifold and an oxidation catalyst.

For the secondary emissions targets the addition of a reducing catalyst and protective 'getter' box will be required.

Fuel consumption over the CVS-CH cycle should be 15.5 l/100 km (15 mpg).

Drive-by noise level will be 77 dBA.

3. Naturally Aspirated 4-stroke
<u>V-8 Indirect Injection Diesel Engine</u>

8 cylinders 88 mm x 98 mm (3.46" x 3.86")
4.78 litre (292 CID)
96 kW (128 bhp) at 66.7 rev/s
290 N.m (210 lb.ft) at 33.3 rev/s
320 kg (700 lb) estimated weight)

For the primary emissions targets the engine should only require retardation of the injection timing to reduce NO_x levels to 1.2 - 1.5 g/mile although some slight exhaust gas recirculation might be necessary to ensure production compliance.

It is not thought that this type of engine could meet more stringent NO_x limits than 1.0 g/mile with conventional injection equipment and current combustion systems.

Fuel consumption with this engine should be 11.5-10.5 l/100 km (20-22 mpg) on the CVS-CH cycle.

Drive-by noise should be 76 dBA.

4. Boosted 4-stroke 6 cylinder
<u>Indirect Injection Diesel Engine</u>

6 cylinders - 90 mm x 100 mm (3.54" x 3.94")
3.84 litre (234 CID)
96 kW (128 bhp) at 60 rev/s
290 N.m (210 lb.ft) at 33.3 rev/s
327 kg (720 lb) (in-line-6) estimated weight
309 kg (680 lb) (V-6) estimated weight

This engine would be lightly boosted by a turbocharger to attain the above performances. In-line and V configurations were schemed.

For the primary emissions targets, only injection retard should be required although some slight exhaust gas recirculation might be needed to ensure production compliance.

As for the naturally aspirated engine, no secondary emissions configuration was schemed.

The target vehicle, equipped with this engine, should achieve 12-11 l/100 km (19-21 mpg) during the CVS-CH cycle, the poorer part load consumption of the turbocharged engine causing this penalty when compared with the naturally aspirated engine.

Drive-by noise level should be 75 dBA.

5. Comprex on 4-stroke 6-cylinder
Indirect Injection Diesel Engine

6 cylinders - 90 mm x 100 mm (3.54" x 3.94")
3.84 litre (234 CID)
96 kW (128 bhp) at 60 rev/s
290 N.m (210 lb.ft) at 33.3 rev/s
327 kg (720 lb)estimated weight

This engine, only schemed in in-line form due to manifolding problems with the pressure exchangers, would employ the 'Comprex' to provide a slight improvement in torque over more of the speed range than with a turbocharger and to give a more driveable engine. It is considered that suitable sound insulation could be fitted to the 'Comprex'.

The emissions of the engine will be the same as for the turbo-charged version and fuel consumption and drive-by noise should be similar at 12 - 11 l/100 km (19 - 21 mpg) and 75 dBA.

6. Boosted 4-stroke 6-cylinder Direct
Injection Diesel Engine

6 cylinders - 93 mm x 94 mm (3.66" x 3.70")
3.84 litre (234 CID)
96 kW (128 bhp) at 60 rev/s
290 N.m (210 lb.ft) at 33.3 rev/s
310 kg (680 lb) (In-line 6) estimated weight
300 kg (660 lb) (V-6) estimated weight

It was considered that only a boosted direct injection engine would have adequate power for a reasonable weight and volume and would allow sufficient injection timing retard for emissions control.
The engine schemed out would only be capable of meeting NO_x limits of 2.5 g/mile and would be retarded by 10° crank and have 10% exhaust gas recirculation even to achieve this. HC levels at these retarded timings would be very high and an efficient oxidising catalyst has been assumed to allow the 0.41 g/mile target to be met. (Such a catalyst does not exist at present.)

Predicted fuel consumption is 11 - 10 l/100 km (21 - 23 mpg) on the CVS-CH cycle and predicted drive-by noise level is 82 dBA.

8. Loop Scavenged 2-stroke 6-cylinder
Indirect Injection Diesel Engine

6 cylinders - 99 mm x 114 mm (3.89" x 4.50")
5.27 litre (321 CID)
96 kW (128 bhp) at 45 rev/s
400 N.m (290 lb.ft) at 33.3 rev/s
340 kg (760 lb) estimated weight

For this engine a 90° V-6 configuration was chosen.

It was considered that the primary emissions NO_x level of 1.5 g/mile could be met, but there is little doubt that the HC target of 0.41 g/mile would be unattainable with present combustion systems and fuel injection equipment while the levels are likely to be so high that no current catalyst is known to be capable of ensuring compliance.

Predicted fuel consumption is 13 - 11.5 l/100 km (18 - 20 mpg) and the predicted drive-by noise level is 75 dBA.

9. Uniflow 2-stroke 6-cylinder
Direct Injection Diesel Engine

6 cylinders - 83 mm x 114 mm (3.28" x 4.50")
3.74 litre (228 CID)
96 kW (128 bhp) at 45 rev/s
414 N.m (300 lb.ft) at 33.3 rev/s
365 kg (800 lb) (In-line 6) estimated weight
354 kg (780 lb) (V-6) estimated weight

Two configurations of this engine were schemed out, an in-line 6 cylinder and a 90° V-6.

With this form of combustion system it is unlikely that the NO_x targets can be met and there is some doubt as to whether the HC levels will be below the target without the use of a catalyst. These predictions assume current technology.

This engine should allow the target vehicle to achieve 12.5 - 11.5 l/100 km (19 - 21 mpg) over the CVS-CH cycle, and drive-by noise level should be 75 dBA under U.S. Federal Test conditions.

10. Compound 4-stroke 4 cylinder Direct Injection Diesel Engine

4 cylinders - 93 mm x 93 mm (3.66" x 3.66")
2.52 litre (154 CID)
Turbine and compressor directly geared to crankshaft
96 kW (128 bhp) at 50 rev/s
318 N.m (230 lb.ft) at 50 rev/s
305 kg (670 lb) estimated weight

For light duty application the directly geared turbo-compound configuration was chosen since it gives good part load fuel consumption and is the most suitable construction for mass-produced passenger car application. The torque curve is such that a new transmission system is required since the torque is at maximum at full speed full load and falls at all conditions below this. The high rating will prevent the primary NO_x target of 1.5 g/mile being achieved while the need for low compression ratios and the very wide range of fuel quantities to be burnt in the combustion system will almost certainly give a very high hydrocarbon level. If the engine were produced and if a suitable transmission could be used, fuel consumption might be 11.2 - 10.2 l/100 km (21 - 23 mpg) on the CVS-CH cycle.
Drive-by noise level could be as low as 75 dBA.

11. 2-stage 2 bank Rotary Diesel Engine

2-stage, 2 rotors - 5.35 litre (326 CID) L.P. rotor
96 kW (128 bhp) at 66.7 rev/s (output shaft)
290 N.m (210 lb.ft) at 25 rev/s
227 kg (500 lb) estimated weight

This engine would consist of two banks of a two-stage rotary engine. The first L.P. stage would be 5.35 litre (326 CID) per lobe (2:3 geometry) while the second stage would be 1.343 litre (82 CID) per lobe. The combustion system would be of swirl chamber type. The output shaft would be linked to the rotors to provide a 2:3 speed reduction.

This engine would probably be able to meet the NO_x limit of 1.5 g/mile. However, the difficulties of achieving good combustion with this type of engine imply that both HC and CO levels will be extremely high and the target levels certainly would not be attainable without some major improvement in catalyst technology.

Fuel consumption would be little better than with the gasoline engine over the CVS-CH cycle and is predicted to be 16.4 - 14.7 l/100 km (14-16 mpg). There is some evidence that the engine would be quiet and a drive-by noise level of 75 dBA is predicted.

Power Plant Rating

One of the major aims of the study was that a methodology should be derived which would allow a quantitative assessment of the relative merits of various power plants for light duty vehicle use. Although the study was concerned only with a comparison of gasoline and diesel configurations, the methodology was developed so that it could be applied to any liquid hydrocarbon power plant and thus should be of value in other studies.

The advantages of such methodology are that its application will allow a direct quantitative rating of various power plants and that it should also be possible to identify those factors and aspects which render a particular power plant suitable for a particular duty. The second advantage allows an assessment of changes in a particular area as well as high-lighting areas worthy of effort to make a particular configuration more suitable for use in a given environment.

The fitness of a power plant for light duty use can be assessed under the following broad headings :-

a) Emissions
b) Package (Size, weight, etc.)
c) Costs
d) Nature (Driveability)
e) Others (Convenience and minor safety aspects)

These headings were too broad for a detailed measurement of different power plants and a more detailed list of performance aspects was drawn up such that the various aspects would cover all facets of the operation of light duty vehicle power plants fuelled by liquid hydrocarbons. The individual performance aspects were as follows :-

1. Smoke
2. Particulates
3. Odour
4. NO_x
5. HC
6. CO
7. SO_2
8. HC reactivity
9. Evaporative emissions

10. Misc. emissions
11. Drive-by noise
12. Package volume
13. Package weight
14. Fuel economy
15. Fuel
16. Vehicle first cost
17. Maintenance cost
18. Startability
19. Hot driveability
20. Cold driveability
21. Torque rise
22. Durability
23. Coolant heat loss
24. Fire risk
25. Idle noise
26. Vibration and torque recoil

The performance aspects were generally those studied in the literature survey although certain others were added so that the rating methodology would be complete.

The final rating involved the assignment of weighting factors to each of the performance factors, followed by the rating of each candidate engine under the same heading.

The weighting factors were assigned by a group of eighteen Ricardo engineers, each with experience of the emissions field and of the American automotive situation, who were each instructed to act in isolation in assessing the factors. The weighting factors, which are listed in Table 2, are the arithmetic means of the values assigned by the members of the group.

The rating of the individual engines involved the devising of a scale which would cover both quantitative and qualitative assessments.

As expected, some difficulty was experienced in relating purely subjective impressions to a linear quantitative scale, but after some consideration the following system was adopted as giving several easily relatable, subjective key points to the numerical scale, the numbers without definition being an interpolation of the surrounding merit definitions.

Merit Rating Scale

0	Totally unacceptable
1	
2	Bad
3	
4	Poor
5	Acceptable
6	
7	Good
8	
9	Best practical
10	Perfect

TABLE 2

Final Weightings Used in Study

	Aspect	Weighting
1	Smoke	4.48
2	Particulates	2.14
3	Odour	4.48
4	NO_x	3.92
5	HC	3.99
6	CO	3.61
7	SO_2	3.48
8	HC reactivity	1.83
9	Evaporative Emissions	1.60
10	Miscellaneous Emissions	0.98
11	Noise (Drive-by)	6.32
12	Package volume	2.61
13	Package weight	2.59
14	Fuel economy	12.20
15	Fuel cost	5.40
16	Vehicle first cost	4.65
17	Maintenance cost	4.35
18	Startability	4.85
19	Hot driveability	4.48
20	Cold driveability	3.52
21	Torque rise	1.98
22	Durability	4.80
23	Heat loss	2.18
24	Fire risk	3.55
25	Idling noise	3.83
26	Vibration and torque recoil	2.18

The rating system evolved allowed an immediate quantitative assessment of the overall merit of the power plant which was accomplished by multiplying each aspect 'rating' by its appropriate 'weighting' and summing all products. With a total weighting of 100 and a merit scale of 0 - 10 as above, the maximum possible score is 1000.

A committee was used to assign ratings to the various power plants. The committee consisted of five experienced members of the Ricardo staff and great care was taken to ensure that the committee had no bias to either diesel or gasoline power plants. The power plants considered were those described in the 'engine configuration' section of the report with the addition of the two gasoline engines described briefly in the same section.

Each of the power plants was to be considered for the primary and secondary emission levels of the study, i.e.

Primary Targets	
HC	0.41 g/mile
CO	3.4 g/mile
NO_x	1.5 g/mile

Secondary Targets	
HC	0.41 g/mile
CO	3.4 g/mile
NO_x	0.4 g/mile

but since it was considered that none of the diesel power plants could possibly meet the secondary targets (in particular the 0.4 g/mile NO_x figure) the rating system was only applied to an environment embracing the primary targets.

The ratings for each performance aspect are given in Table 3. The designation (O) indicates that the particular engine is completely unable to meet the particular target, which might be considered to be a disqualification for light duty use.

TABLE 3

Final Ratings for Each Aspect

	Aspect	V-8 Gasoline	6 cyl. gasoline	V-8 IDI	6 cyl. IDI T/C	6 cyl. IDI Comprex	6 cyl. DI T/C	6 cyl. DI Comprex	2-stroke loop scavenge	2-stroke uniflow	Compound	2 stage rotary
1	Smoke	9	8	6	4.5	5	4.5	5	4	5	3	2
2	Particulates	7	7	2	2	2	2	2	2	2	2	2
3	Odour	7	7	4	4	4	3	3	3	3	3	2
4	NO_x	5	5	5	5	5	(0)	(0)	5	(0)	(0)	5
5	HC	5	5	5	5	5	(0)	(0)	(0)	(0)	(0)	(0)
6	CO	5	5	6	5	5	5	5	5	5	5	(0)
7	SO_2	7	7	4	4	4	4	4	4	4	4	4
8	HC reactivity	5	5	7	7	7	7	7	7	7	7	7
9	Evap. emissions	5	5	7	7	7	7	7	7	7	7	7
10	Misc. emissions	5	5	5	5	5	5	5	5	5	5	5
11	Noise (drive by)	7	6.5	6	6	5	4	3	6	6	6	6
12	Package volume	7	8	6	5	4	5	4	4	3	5	8
13	Package weight	6	7	5	5	5	5	5	4	4	5	7
14	Fuel economy	5	5.5	7.5	7	7	8	8	6.5	7	8	5
15	Fuel cost	5	5	5	5	5	5	5	5	5	5	5
16	Vehicle first cost	6	7	5	5	5	5	5	4.5	4.5	4	4
17	Maintenance cost	5	6	6	6	6	5	5	5	6	4	2
18	Startability	6	6.5	5	5	5	5	5	4	5	2	2
19	Hot driveability	7	7	7	6	7	6	7	7	7	7	7
20	Cold driveability	5	6	8	8	8	8	8	8	8	8	8
21	Torque rise	7	7	7	7	7	7	7	7	7	2	7
22	Durability	6	5.5	7	6	6	6	6	7	8	5	2
23	Heat loss	5	5	5	5	5	5	5	5	5	5	4
24	Fire risk	5	5	6	6	6	6	6	6	6	6	6
25	Idling noise	8	8	5	5	5	3	3	5	4	2	5
26	Torque recoil	8	8	6	5	5	5	5	5	5	4	7

The product of the weighting and rating for each performance aspect was summed up for each power plant and the results of this operation are shown in Table 4 :-

TABLE 4

	Power Plant	Final Score (Rounded to nearest whole number)
1	V-8 gasoline	608
2	6 cylinder gasoline	620
3	V-8 IDI	587
4	6 cylinder IDI T/C	556
5	6 cylinder IDI Comprex	554
6	6 cylinder DI T/C	(500)
7	6 cylinder DI Comprex	(497)
8	2-stroke loop scavenge	(516)
9	2-stroke uniflow	(515)
10	Compound	(465)
11	2 stage rotary	(434)

In order to establish the validity of the 'committee method' of rating two re-runs were done for the gasoline engines and the IDI diesels. The final runs for these power plants were found to be within $\pm 2\frac{1}{2}\%$ of the above figures and the relative order of scores was not found to change. Because of this the final scores from the first complete run shown in Table 4 were taken as representative of the relative merit of the various power plants.

The rating methodology has the disadvantage that a rating of 0 in any aspect can be hidden by good ratings for other aspects, and the bracketed figures in Table 4 are for those power plants which scored a 0 (i.e. totally unacceptable) in one or more performance aspects.

The results indicate that the gasoline power plants are superior to the diesel power plants and that only the indirect injection 4-stroke diesels are viable for the duty considered. All the other diesel power plants are unacceptable due to the inability to score better than zero on one or more performance aspects (generally emissions).

With the weightings adopted, the gasoline engine's superiority for passenger car use in America is demonstrated but the closeness of the final scores indicates that only quite minor changes in the weightings would bring the scores equal. It is apparent that in an emissions and fuel conscious environment there are many applications which would change the individual weighting systems sufficiently to make the automotive diesel an attractive alternative to the gasoline engine.

Without a breakthrough in the reduction of exhaust emissions of diesel engines, no diesel power plant can meet the secondary emissions target however.

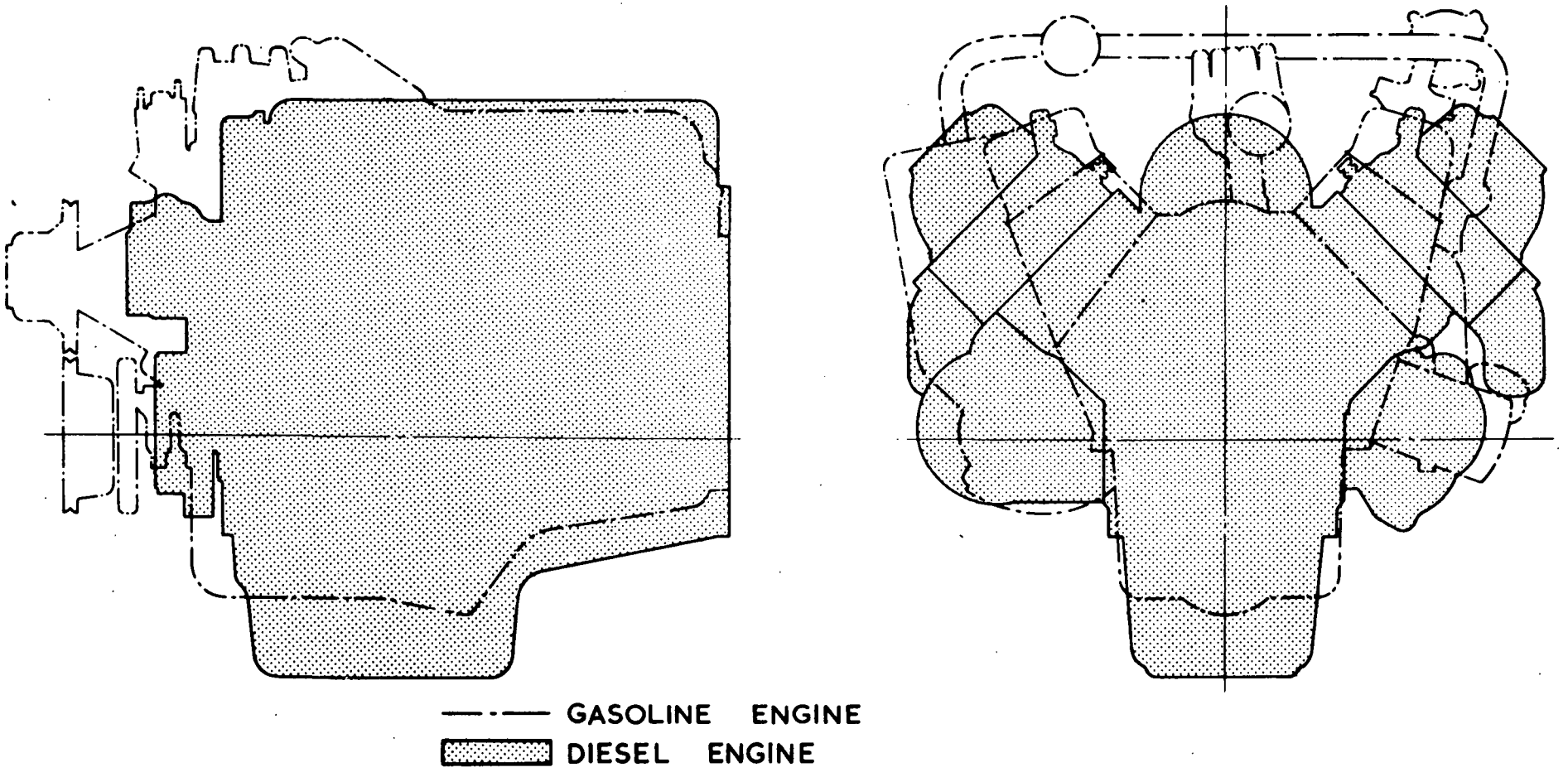

OUTLINES OF A 96 kW V-8 NATURALLY ASPIRATED I.D.I. DIESEL ENGINE AND A CURRENT 5 l (300 CID) AMERICAN V8 GASOLINE ENGINE

FIG. No. 1-1
DRG. No. S 5804
DATE:- 2-8-74

SECTION 2

INDEX AND LIST OF FIGURES

		Page
	Contents	1-1
1.	Executive Summary	1-2
	Conclusions	1-4
	Recommendations	1-5
2.	Index and List of Figures	
	Index	2-1
	List of figures	2-2
3.	General Summary & Introduction	
	Summary	3-1
	Introduction	3-4
4.	Literature Survey	
	Summary	4-1
	Introduction	4-2
	Scope of survey	4-3
	Performance aspects	4-3
	Conclusions	4-50
	Areas requiring future work	4-56
5.	Engine Configuration Study	
	Summary	5-1
	Configuration study	5-2
	CVS-CH consumption & emissions estimation	5-49
6.	Power Plant Rating	
	Summary	6-1
	Performance aspects	6-2
	Weighting factors	6-3
	Rating scale	6-5
	Results of rating	6-7
	Final rating	6-33
	Results	6-34
	Conclusions	6-35
7.	Programme Plans	7-1
8.	Appendix 1 - Keyword System	8-1
9.	Appendix 2 - List of References	9-1
10.	Appendix 3 - Glossary of Terms	10-1

LIST OF FIGURES

SECTION 1

Fig. 1-1 Outlines of a 96 kW V-8 Naturally Aspirated I.D.I. Diesel Engine and a Current 51 (300 CID) American V-8 Gasoline Engine.

SECTION 4

Fig. 4-1 Bar Chart of Institution and Conference Papers Surveyed

4-2 Bar Chart of Journals Surveyed

4-3 Study of European Diesel Vehicle Operators Contacted to Obtain User Experience Data

4-4 2 litre D.I. Conversion Performance Comparison - D.I. and Comet V Builds

4-5 Comparison of Full Load Characteristics for Three Combustion Chambers on 2-litre 4-cylinder Engine

4-6 NO Emission and Performance Characteristics of D.I. and Swirl Chambers

4-7 Effect of Exhaust Gas Recycle on Performance and Smoke of a Six Cylinder Swirl Chamber Engine over its Load Range at 28 rev/s (1700 rev/min)

4-8 The Response of Naturally Aspirated Engine NO_x Emissions to Load

4-9 The Response of Turbocharged Engine NO_x Emissions to Load

4-10 Light Duty Diesel Vehicle Emission Levels - 1975 FTP (CVS-CH)

4-11 Data on Current Small 4-Cylinder High Speed Diesel Engines for Automotive Applications

4-12 Comparison of Diesel and Gasoline Engine Weight/Swept Volume

4-13 Diesel versus Gasoline Weight Analysis for 4 Cylinder Engines

4-14 Power/Litre of Some Current Gasoline and Diesel Engines

Odour at full load can be minimised by combustion chamber development. The proposed reductions in smoke levels should alleviate this problem.

The identification of several odorous components has been achieved but quantitative assessment has yet to be perfected. The A.D. Little Odormeter may advance technology in this area by a significant step.

Gaseous Emissions

In general, turbocharging increases NOx further by increasing the charge temperature but it allows further retard for the same smoke limit.

Exhaust gas recirculation is effective in reducing NOx levels(particularly over the CVS-CH cycle) but durability has yet to be proved and it does tend to increase smoke emissions.

Although water injection has the benefit of reducing NOx without significantly affecting engine performance, the logistics of the installation and the problems of engine durability make this measure unattractive.

Timing retard is undoubtedly the most effective single parameter for the reduction of NOx and the fact that the smoke limited performance of the IDI engine tends to deteriorate less with retard than the DI gives it a major advantage in this field.

The limited data available indicates that emission levels from 2-stroke engines should be of the same order as from 4-stroke engines of similar performance.

Heavy duty experience leads to the conclusion that the use of a conventional direct injection chamber will increase both NOx and CO levels while HC levels might rise rapidly with retarded timings. It seems almost certain that a high speed (67 rev/s) (4000 rpm) conventional, naturally aspirated direct injection engine would not achieve the primary emission levels due to its low smoke limited performance at retarded timings.

For a naturally aspirated 4-stroke indirect injection engine it can be predicted that 3.4 g/mile CO can be achieved; 0.41 g/mile HC could be attained on prototype vehicles although this figure may not be held in production ; and 1.5 g/mile NOx could just be obtained from a prototype current generation engine although some exhaust gas recirculation may be necessary to allow a margin for production compliance.

Although 0.4 g/mile NOx has been achieved with a highly modified prototype engine in a European type vehicle, it is extremely unlikely that this figure would be achieved with a heavier vehicle and with a higher power to weight ratio.

Any diesel powered vehicle would have less difficulty in achieving the target objectives if both weight and power to weight ratio were reduced. A lighter, lower powered vehicle would also have improved fuel economy.

Particulates

The early suggested Californian requirement would present a major problem for all engines with a heterogeneous combustion system and this is undoubtedly a problem area for the diesel engine. However, the true effect of particulates on health is unknown at the moment and the problem could be solved by the addition of filter systems although this move would carry a high cost penalty.

It is considered that work should be initiated into the distribution of particulates from different types of engines and their true health hazard determined before any legislation is finalised. An understanding of their formation within the engine might also be a useful tool for their control and thus a fundamental investigation using experimental and analytical techniques should also be started.

Noise

The drive-by noise levels of diesel powered vehicles are slightly higher than those of gasoline powered vehicles but there is no reason why light duty vehicles should not meet proposed noise legislation.

The idle noise is annoying to the by-stander as well as the driver with present European vehicles.

There is no reason why diesel powered light duty vehicles should be unacceptable to either the driver or by-stander if sufficient attention is paid to details of the engine and vehicle construction.

Volume

For the same power output the diesel engine is likely to be greater in volume than a highly rated gasoline engine, but the increase in volume is unlikely to pose any major problems.

Fig. 4-15 Vehicle Fuel Consumption versus Inertia Weight during LA4 1975 (CVS-CH) Test Cycle

4-16 Tolerances Controlling Piston to Cylinder Head Clearance

4-17 Effect of Inlet Valve Timing on Low Speed Torque

4-18 Torque Comparison on a 300 HP D.I. Diesel Engine

4-19 Heat Rejected to Coolant for Similar Diesel and Gasoline Engines over the Load and Speed Range

SECTION 5

5-1 Estimated Torque Curve for Ø 97 x 76 mm V-8 Gasoline Engine in Low Emissions Build

5-2 Estimated Fuel Consumption Curves for a Ø 97 x 76 mm V-8 Gasoline Engine in Low Emissions (1.5 g/mile NO_x) build

5-3 Estimated Torque Curve for a Ø88 x 82 mm 6 Cylinder "European Type" Gasoline Engine in Low Emissions Build

5-4 Estimated Load Range Consumption Curves for a 6 Cylinder Ø88 x 82 mm "European Type" Gasoline Engine in 1.5 g/mile NO_x build

5-5 Estimated Performance Curve for Naturally Aspirated Ø88 x 98 mm V-8 Comet V Engine

5-6 Load Range Fuel Consumption Curves for Naturally Aspirated Ø88 x 98 mm V-8 Comet V Engine

5-7 N/A - V-8 - I.D.I. Diesel Engine Installation Drawing

5-8 N/A - V-8 - I.D.I. Diesel Engine Comparison of Crossflow/Unisided Cylinder Heads

5-9 N/A - V-8 - I.D.I. Diesel Engine Cross-Sectional Arrangement

5-10 Estimated Performance Curve for Boosted Six Cylinder Ø90 x 100 mm I.D.I. Engine in Low Emissions Build (1.5 g/mile NO_x in a 3500 lb Passenger Car

5-11 Estimated Load Range Fuel Consumption Curves for a Boosted Six Cylinder Ø90 x 100 mm I.D.I. Engine in Low Emissions Build (1.5 g/mile NO_x) in a 3500 lb Passenger Car

Fig. 5-12 96 kW 6 Cylinder Turbocharged I.D.I. Diesel Engine Installation Drawing showing Comparison between In Line 6 / V-6.

5-13 6 Cylinder Turbocharged I.D.I. Diesel Engine Cross and Longitudinal Arrangement Drawing

5-14 Preliminary Layout of V-6 60° Bank Angle Turbocharged Diesel Engine with 6 Throw Crankshaft

5-15 Preliminary Layout of V-6 Turbocharged Diesel Engine with 3 Throw Crankshaft

5-16 V-6 Turbocharged I.D.I. Diesel Engine Cross and Longitudinal Arrangement Drawings

5-17 Estimated Performance Curves for Boosted Ø93 x 94 mm Six Cylinder D.I. in Minimum Emissions Build

5-18 Estimated Load Range Fuel Consumption Curves for a Boosted Ø93 x 94 mm Six Cylinder D.I. Engine in Minimum Emissions Build

5-19 96 kW Six Cylinder Turbocharged D.I. Diesel Engine Installation Drawing showing Comparison between In-Line 6 /V-6

5-20 6 Cylinder Turbocharged D.I. Diesel Engine Cross-Sectional Arrangement Drawing

5-21 Estimated Performance Curve for 2 Stroke Loop Scavenge I.D.I. Diesel Engine

5-22 96 kW Loop Scavenge - I.D.I. 2 Stroke Diesel Engine Installation Drawing

5-23 V-6 - I.D.I. - 2 Stroke Loop Scavenge Diesel Engine Cross-Sectional Arrangement Drawing

5-24 Estimated Performance Curve for 2 Stroke Through Scavenge D.I. Diesel Engine

5-25 96 kW 2 Stroke Through Scavenge Diesel Engine Installation Drawing

5-26 6 Cylinder 2 Stroke Through Scavenged D.I. Diesel Engine Cross and Longitudinal Arrangement Drawing

Fig. 5-27 V-6 2 Stroke Through Scavenged D.I. Diesel Engine Cross and Longitudinal Arrangement Drawing

5-28 Estimated Performance Curve for Four Stroke Ø93 x 93 Compound D.I. Engine

5-29 96 kW Compound In-Line 4 Cylinder D.I. Diesel Engine Installation Drawing

5-30 Compound In-Line 4 Cylinder D.I. Diesel Engine Cross and Longitudinal Arrangement Drawing

5-31 Estimated Performance Curve for Two Stage Rotary Diesel Engine

5-32 96 kW 2 Stage/2 Bank I.D.I. Rotary Diesel Engine Installation Drawing

5-33 2 Stage/2 Bank I.D.I. Rotary Diesel Engine Preliminary Cross Sectional Arrangement Drawing

5-34 2 Stage/2 Bank I.D.I. Rotary Diesel Engine Preliminary Longitudinal Arrangement Drawing

5-35 Naturally Aspirated 96 kW V-8 I.D.I. Engine Predicted HC ppm Levels in Low Emissions Build

5-36 Naturally Aspirated 96 kW V-8 I.D.I. Engine Predicted NO_x ppm Levels in Low Emission Build

5-37 Naturally Aspirated 96 kW V-8 I.D.I. Engine Predicted HC ppm Levels using Current Fuel Injection Equipment

5-38 Naturally Aspirated 96 kW V-8 I.D.I. Engine Predicted NO_x ppm Levels in Optimum Performance Build

5-39 Typical HC Emissions from a Lightly Boosted Conventional D.I. Engine in Optimum Performance Build

5-40 Typical NO_x Emissions from a Lightly Boosted Conventional D.I. Engine in Optimum Performance Build

5-41 Typical HC Emissions from a Lightly Boosted Comet V Engine in Optimum Performance Build

5-42 Typical NO_x Emissions from a Lightly Boosted Comet V Engine in Optimum Performance Build

SECTION 6

Fig. 6-1 Light Duty Vehicle Power Plant Survey Results

SECTION 3

GENERAL SUMMARY AND INTRODUCTION

This report summarises the results of a study which was conducted on behalf of the Office of Mobile Source Air Pollution Control of the Environmental Protection Agency and which was aimed at identifying the problem areas and estimating the effect of the wide use of the diesel engine as a light duty power plant in the United States.

The diesel engine is widely used in Europe for light duty vehicles and for taxi cab services, roles in which its well known advantages in respect of fuel economy and emissions are of great importance, and in which the off-setting problems of weight, bulk, noise, cost and possibly odour are accepted. The prospect of the high costs, greater weight, increased bulk, and lower specific power of an emissions controlled gasoline engine may reduce the impact of some of these problems while the undoubted fuel economy advantage of the diesel engine may be accentuated in an emissions controlled United States environment.

Since there is little United States experience of light duty diesel engines, the first stage of the study entailed the collection of related data and a preliminary account of the feasibility of the diesel as a light duty power plant. This first stage involved a study of published and unpublished literature from technical journals and learned societies throughout the world. Visits were also made to existing diesel users and manufacturers throughout Europe so that operating and service factors could be estimated realistically. A careful assessment of the literature and visits indicated that a diesel engined passenger car should be able to meet the proposed emission targets of 0.41 g/mile HC, 1.5 g/mile NO_x and 3.4 g/mile CO although the secondary target of 0.4 g/mile NO_x did not appear likely. It appeared that the main problems of the diesel engine might be odour, particulates, noise, bulk, cost and starting. In the areas of reliability, driveability and economy there seemed to be considerable advantages to the diesel engine.

The next stage of the study involved the preliminary design of potentially viable diesel power plants. These power plants had to be capable of propelling a 1600 kg (3500 lb) car with an acceleration potential equal to that of a 'standard' American car. (Essentially they were 97 kW (130 bhp) engines).

The concepts studied included reciprocating and rotary diesel type engines with and without turbocharging, compounding and low heat loss components. Two gasoline power plants were also outlined for comparison purposes. The configuration study covered the following contenders for the power plant :-

1. 8-cylinder 'American' gasoline
2. 6-cylinder 'European' gasoline
3. 8-cylinder IDI diesel 4-stroke
4. 6-cylinder IDI diesel 4-stroke turbocharged
5. 6-cylinder IDI diesel 4-stroke with 'Comprex'
6. 6-cylinder DI diesel 4-stroke turbocharged
7. 6-cylinder DI diesel 4-stroke with 'Comprex'
8. 6-cylinder IDI diesel 2-stroke loop scavenged
9. 6-cylinder DI diesel 2-stroke uniflow
10. 4-cylinder compound diesel 4-stroke
11. 2-stage, 2-bank rotary diesel

Drawings were prepared for all the diesel power plants and performance curves and emissions levels were calculated.

The third stage of the study was an assessment of the relative merits and viability of the power plants for both the primary and secondary targets.

In order to compare the various power plants a quantitative rating method was devised. This involved an estimate of the relative importance of 26 performance aspects and assigning to them numerical 'weightings'. Assessment of the merit with which each power plant met an aspect allowed a numerical 'rating' to be assigned. Summation of the weighted ratings allowed the power plants to be compared numerically.

Use of this rating system on the power plants indicated that the gasoline engines were slightly superior to the diesel engines for the primary emissions targets and that only the 4-stroke IDI diesels were really viable for the duty considered.

None of the diesel engines could be considered as being practical power plants for the secondary emission targets.

The fourth and final stage of the study was an assessment of the implications of the above results so that proposals for further work and research could be made if it seemed desirable.

It was concluded that :-

a) In view of the large extrapolations required from current European practice an 8-cylinder IDI diesel 4-stroke engine should be built and demonstrated.

b) A 6-cylinder IDI diesel should be built and work on turbochargers and 'Comprex' pressure exchangers should be carried out.

c) Work should be pursued on advanced and potentially cheaper fuel injection systems.

d) The low compression ratio, ignition assisted IDI engine should be investigated thoroughly.

e) A fundamental investigation into the formation of hydrocarbons in diesel engines should be carried out together with an attempt to produce catalysts with a lower light-off temperature.

f) A control system for the modulation of exhaust gas recirculation should be developed.

g) A quick warm up starting aid should be developed.

h) Diesel engines should be demonstrated in taxi cab and light delivery truck service to encourage a rapid switch to diesel power for these duties.

i) A study into particulate formation in diesel exhaust together with the development of soot and particulate filters is desirable.

Introduction

There is little doubt that the low emissions gasoline engine offers the prospect of higher cost, lower specific power and high specific bulk and weight while the increasing cost of fuel renders higher efficient alternative power plants more attractive.

The diesel engine is demonstrably the most efficient practical prime-mover produced today and it is known to have favourable emissions characteristics. The most efficient diesel engines are not used in light duty vehicles because of their bulk and limited speed range while those diesel engines currently used in light duty vehicles are smaller than would be required for an American passenger car and have not yet been developed to meet very stringent emissions targets.

In Europe and Japan small high speed diesel engines are used widely for light duty vehicles and taxi cab service while in some countries there is also a minority of diesel powered passenger cars. Thus there is already a great mass of experience of light duty diesel vehicles in most roles.

The present American environment, however, cannot be related directly to European and Japanese experience. The diesel engined passenger cars used in Europe and Japan have been of smaller size than typical American cars and have also had lower power to weight ratios. Current and proposed American emission standards are different from those obtaining in the rest of the world so that there has not, as yet, been any attempt to run existing light duty diesel engines in service in low emissions build.

Consideration of the diesel engine for an American passenger car immediately reveals that it will be considerably larger and will spend most of its life running under different conditions than those currently found elsewhere. It was these considerations which led to the objectives of this study, i.e. an examination of the feasibility of using the diesel engine as a power plant for an American passenger car, an examination of potential problem areas and a study of the trade-offs possible within these areas. The determination of the possibilities of finding solutions to any outstanding technical problems, and finally to put forward recommendations for the future increase in light duty diesel engines (if any be thought desirable) and to indicate the best routes to achieve this increase.

SECTION 4

LITERATURE SURVEY, ASSESSMENT OF PROBLEM AREAS AND TRADE OFFS

This section contains a digest of the articles considered in a survey of light duty (and appropriate heavy duty) diesel literature and the conclusions obtained from visits to manufacturers and users of light duty diesel engines in Europe. The published literature covered the period from 1919 to the present although most of the information came from the period from 1950 to the present. Where possible and pertinent the published information was augmented by technical data from Ricardo in-house reports.

Study of the literature, which was conducted under the headings of 'Performance Aspects', allowed problem areas and potential trade-offs to be identified as well as indicating some of the possible gains from the use of light duty diesel engines in America.

The major conclusions were that there were no major problem areas in the use of light duty diesel engines in America. Smoke, odour, particulates, noise, volume, weight, cost, starting and refinement would be inferior to existing gasoline engines but there would be advantages in respect of emissions, fuel economy, maintenance, driveability, durability and overall economics.

Emissions predictions indicated that the diesel engined American passenger car might just achieve the primary emissions targets of HC - 0.41 g/mile. CO - 3.4 g/mile, NOx - 1.5 g/mile without catalysts, but that the secondary emissions targets of 0.4 g/mile NOx would be practically impossible to achieve.

Introduction

Although diesel engined light duty vehicles and taxi cars are widely used in Europe and Japan, all the current service experience undoubtedly relates to engines which are smaller and which run under different load conditions from those which would be applicable to present and proposed American light duty conditions. Current service experience moreover is with a generation of engines which were not emissions biased although much work has been carried out recently to determine the emissions characteristics of these engines.

It was these conditions which indicated that a study of published literature, Ricardo in-house reports and data, and discussion with current light duty diesel manufacturers and users would yield much useful information on the likely feasibility of the diesel engine for American light duty use and which would also indicate the problem areas and potential trade-offs if diesel engines were adopted for American use.

Although defined in the configuration study, the goals of the complete study had to be kept in mind throughout this literature study.

The vehicle and application considered was a 1600 kg (3500 lb) 4/5 seat sedan capable of achieving 0 - 97 km/h (0 - 60 mph) in 13.5 s, 32 - 113 km/h (20 - 70 mph) in 15 s, and the D.O.T. high speed pass manoeuvre in 15 s so that an installed power of about 96 kW (128 bhp) was required.

The emissions targets were that the vehicle should achieve the following figures measured by the CVS-CH test procedure.

a) Primary Targets

HC	0.41	g/mile
CO	3.4	g/mile
NOx	1.5	g/mile

b) Secondary Targets

as above but

NOx	0.4	g/mile

Scope of the Survey

Since its first application, much has been written about the diesel engine and a considerable proportion of the published work has dealt with light duty engines. For the survey the period 1919 to the present day was selected as appropriate although the majority of the information was uncovered for the period 1950 to the present. For this period all published and unpublished reports and translations were checked and Figs. 4-1 and 4-2 show the scope of the survey. For convenience in analysis the light duty diesel engine was considered under various performance aspect parameters, as shown in Table I below:-

TABLE I

Performance Aspects

1.	Smoke
2.	Odour
3.	Gaseous Emissions
4.	Particulates
5.	Noise
6.	Volume
7.	Weight
8.	Fuel Economy
9.	Fuel
10.	First Cost
11.	Maintenance
12.	Starting
13.	Hot Driveability
14.	Cold Driveability
15.	Torque Rise
16.	Durability
17.	Coolant Heat Losses
18.	Fire Risk
19.	Vibration & Torque Recoil
20.	Idle Noise
21.	Reliability
22.	Economics
23.	Manufacture
24.	Performance
25.	Design
26.	Ancillaries
27.	Lubrication

In order to assist in the identification of major conclusions and problem areas, a keyword system was used to classify the items of information uncovered in the literature search and this keyword system, a three level one, is described in Appendix 1 (section 8).

The literature search covered some 700 items and although it is not possible to refer to them all in detail, a complete list may be found in Appendix 2 (section 9).

In addition to the literature study, several European companies involved with the day to day operation of diesel powered light duty vehicles were contacted to obtain a unbiased opinion of the true operational characteristics of diesel passenger cars in current European conditions. The companies contacted are listed in Fig. 4-3.

Exhaust Smoke

Any suggestion to make wider use of the diesel engine may come under public attack because of the diesel's anti-social reputation in this respect. It is important to realise however that black smoke is not an inherent characteristic of a diesel engine but only of one that is either ill-maintained or is overloaded.

Apart from Thermal or Mechanical Loading limits, which are a function of engine design, it is the onset of excessive black smoke in the exhaust which limits diesel engine output. Smoke limitations are therefore output limitations.

Black Smoke

Exhaust smoke may be of one of two forms, either black or blue/white. Black smoke occurs when there is insufficient oxygen for complete combustion of the fuel and since in the diesel engine combustion is heterogeneous, it can occur even though there is an overall excess of oxygen in the charge.

When a fuel drop is heated in a combustion chamber, complete oxidation of the carbon and hydrogen occurs provided there is a plentiful supply of oxygen and provided further that there is time for combustion to be completed before the reactions are quenched by expansion of the gases. If there is a shortage of oxygen however, the hydrogen preferentially takes it quota, leaving too little oxygen for complete combustion and under this condition carbon particles are formed which appear as black smoke in the exhaust (19).

The exact chemical reactions leading to the formation of smoke are however unknown although they may involve C_2 or C_3 fragments of hydrocarbon decomposition as a basic building brick leading to a final polybenzenoid structure for the final smoke particle. It may even be that there are a number of alternative paths leading to such formation.

Soot production takes place during the early part of the combustion process of all diesel engines but under conditions in which the exhaust smoke emission is low, the soot is consumed during the later parts (9).

The formation of soot particles is a characteristic of diffusion flames such as are typical of combustion in a diesel engine and photographs of such combustion exhibit intense white or yellow radiation of incandescent particles under all engine conditions. There is a dramatic difference in this respect from premixed combustion in a gasoline engine, which exhibits a much lower degree of luminosity.

At high fuel inputs, with a consequent smoky exhaust, the radiation persists until cooling takes place during expansion which leads to quenching of the combustion products and the emission of black exhaust smoke (38).

Blue/White Smoke

The smoke emission from diesel engines does not consist uniquely of black smoke but at times may include white or blue/white smoke resulting from misfire, the colour of the smoke depending on the size of the droplets.

This smoke is produced by fuel droplets in abundant oxygen which do not reach ignition temperature and which in a partially vaporised form

pass out of the exhaust as a cloud. The problem can occur during the winter when the engine is first started after a long soak at low temperature and on some engines the smoke can persist for a considerable time after start-up. The most general solution is an increase in compression ratio but at very low temperatures even this may not be a complete solution (19). Other solutions are the use of a higher Cetane Number fuel or by decreasing the mid boiling point of the fuel (38).

Blue smoke can also result from excessive lubricating oil consumption (573) and while this may be the result of wear due to high mileage, problems may arise early in the engine life due to unsatisfactory running in of the piston rings.

Combustion Chamber Type and Black Smoke

Diesel engine combustion chambers may be classified into one of three types. The first of these, and the one most extensively used for truck and larger engines, employs direct injection, where the fuel is injected directly into the space above the piston. Prechamber engines employ injection into a flask shaped chamber into which part of the air charge has been compressed, with a restriction between the prechamber and the main chamber. Swirl chamber engines are a special form of prechamber engine in which the entrance to the prechamber is so arranged as to give an intense swirling motion to the air charge in the prechamber; a larger portion of the air charge is compressed into the swirl chamber than would be the case with a prechamber, 50% as against 25% or so, and the restriction between the swirl and main chamber is less pronounced than would be the case in a prechamber engine.

The three types of combustion chamber have different smoke characteristics. Direct injection engines have a relatively slow onset of smoke as load is increased and furthermore have a lower effective air utilisation. As a result, with low smoke limits, the direct injection engine must be more severely derated than a swirl chamber engine (Fig. 4-4). Prechamber engines on the other hand, while they have similar smoke levels to swirl chamber engines at full load, (Fig.4-5) (20,695) can give plateau smoke as the load is reduced, i.e. the smoke does not fall as low as it does on a swirl chamber or with direct injection (16, 18, 20).

Fuel/air mixing is a vital factor affecting smoke production. On direct injection engines, both increased rate of injection and advance in injection timing reduce the amount of exhaust smoke (110). Air swirl rate is also important and it is essential to optimise swirl and rate of injection (Fig. 4-6).

Indirect injection engines are less sensitive to injection rate but have a reverse characteristic in so far as injection timing is concerned, retardation of timing giving reduced smoke output. The insensitivity of injection rate is presumably due to the mixing being controlled by high air velocities rather than by jet mixing.

Fuel Type and Black Smoke

While prechamber engines tend to be less exacting in their fuel requirements than direct injection engines, increasing fuel volatility in all engines helps to reduce black (and indeed white) smoke. While, as has already been mentioned, increasing the Cetane Number helps reduce white smoke, it should not be increased too far or increased black smoke results (294).

Improvements in exhaust smoke can be obtained by fumigating all (543) or part (568) of the fuel with the induction air. Ricardo results suggest however that this can lead to blue smoke in the exhaust at part load unless the fumigated fuel be cut off under these conditions.

One minor but interesting smoke problem was reported during the Vehicle User Survey by the British Petroleum Company, who mentioned that vehicles with fuel pump maximum fuel stop settings set to comply with smoke requirements on continental European fuel with a relative density of 0.825 - 0.835, had a smoke problem in the United Kingdom where the average relative density of fuel is 0.84. This could well cause difficulties in other locations.

Dual fuel engines with gaseous main fuels, ignited by injecting a small charge of diesel fuel, can also give a cleaner exhaust (21)(61), but emission tests on such dual fuel engines show high levels of hydrocarbons in the exhaust.

Anti-Smoke Fuel Additives and Hang-on Devices

There are numerous references to tests with alkaline (usually barium) based fuel additives. All agree that large reductions in smoke levels are obtained but most long term tests show that combustion chamber deposits are increased by the use of these additives (7, 9, 76, 109, 292, 293, 294, 80), since the resulting fuels have a higher ash content than untreated fuel (19). There is also concern as to possible health hazards with metallic additives in the fuel.

It is clear that anti-smoke additives do affect the combustion process and do not merely act as soot dispersants since there is a reduction of mass soot emission as well as a reduction in invisible smoke (9).

Tests with exhaust catalysts have resulted in slight changes in exhaust conditions, there being a small improvement in the smoke levels at the full load/speed condition in one test engine (107). Very little work with such devices has however been reported in the literature.

Smoke in Turbocharged Engines

With the levels of turbocharging likely to be applied to a passenger car engine, the turbocharger will be matched with the engine at the peak torque condition. Hence with any acceptable torque back-up curve the exhaust will be clean under any steady state condition at this and higher speeds. At lower speeds however the torque will be limited by the onset of exhaust smoke and in addition, with turbocharging there could be a transient smoke problem over most of the speed range unless a boost sensor be fitted to the maximum fuel stop.

In this area, the Comprex may have decided advantages over conventional turbochargers but more experience is necessary before it is possible to guarantee that smoke would be eliminated under starting and transient conditions.

Smoke Measurement

Smoke measurement is not the simple problem which it appears to be at first sight as may be seen from the large number of attempts that have been made to design and develop smoke meters. Only a few have

survived as practical instruments and these may be classified as follows:-

a. Sampling light-obscuration meters (Volvo, Hartridge, DDR.RD M.4)

b. Sampling filter soiling meters (Bosch, Von Brand)

c. Full flow obscuration meters (UTAC, USPHS, Beckman, Celesco)

d. Sampling, ligh-dispersant meters (Bosch, Tyndall)

As has been shown, smoke emission from diesels does not consist uniquely of black carbon particles but at times includes white smoke. Light obscuration meters indicate such white smoke as increasing the apparent density whereas filter soiling meters, where the soiling is measured by light reflection, indicate reduced density. Thus the direct correlation betweeen these meters, which should in theory be possible with black carbon particles, breaks down.

Smoke Legislation

Current United States smoke legislation for truck diesel engines limits the average visible smoke from the vehicle to 20% opacity during acceleration and 15% during the lug mode of the Federal smoke cycle with a 50% limit to the peak cycle. While these levels may be acceptable for a limited number of trucks, many of which spend the greater part of their time on highways and not in cities, Ricardo think that such levels from diesel engined light duty vehicles would be unacceptable and would suggest a level of approximately 5-7% opacity at the rated speed and 8-10% at peak torque speed.

These proposed levels are in fact in line with those laid down in Britain for this size of engine, and it is Ricardo's belief that current European diesel passenger cars could comply with these limits.

Typical smoke legislation for countries other than the United States is as follows:-

In Britain control of diesel engine smoke in road vehicles is covered by British Standard AU 141a:1971. This requires a 100 hour type test

for each basic engine type for certification. The AU 141a smoke limit is in the form of a curve which defines the smoke limit at different levels according to the engine output; the higher the output the lower the smoke limit. The limits apply to speeds at full load from 100% down to 45% of the maximum speed, or 16.7 rev/s (1000 rev/min) whichever is the higher, smoke density being measured by a light obscuration method.

The European Economic Community (EEC) have produced a smoke test code for diesel engined road vehicles (EEC test code 72/306/EEC). This includes steady state testing over the same road/speed range as the British Standard and with limits similar to but slightly higher than those of BS AU 141a. In addition a free acceleration test procedure is included with a smoke limit set slightly above the limit of the steady state tests, so that the transient response can be checked and also road-side tests carried out on vehicles. In this test code, smoke measurement is by opacity smoke meter.

Czechoslovakia

The test is a filter soiling type using meter type NC 112, allowing 40% discoloration of the filter in new vehicles and 50% discoloration in other vehicles.

Finland

A full load acceleration test, in gear, is specified using a filter soiling smoke meter.

E. Germany

Steady state and free acceleration tests are under investigation using RD M-4 smokemeters.

Japan

A steady state, full load test at 40, 60 and 100% rated speed with smoke measurement by filter soiling smoke meter and a limit of 50% discoloration at each test condition.

Jugoslavia

Exhaust density must not exceed No. 2 Ringelmann.

Mexico

Smoke emission not to exceed No. 2 Ringelmann for more than 10 seconds.

South Africa
A free acceleration test with Hartridge meter is specified, with a smoke limit of 70 HSU (Hartridge Smoke Units).

Spain
Free acceleration limit of 65 HSU operates from 1970 in Madrid only.

Sweden
The test involves a loaded vehicle in gear, limiting the maximum speed to 45 - 50 km/h. Full load acceleration is tested using either Bosch or Hartridge meters. Limits for passenger vehicles for more than 30 persons are 30 HSU or 2.5 Bosch. The limit for other vehicles is 45 HSU or 3.5 Bosch.

Switzerland
Full load steady state using Bosch meter and free acceleration test using Bosch integrating smokemeter. For steady state test, limits range from 6 Bosch for up to 3 litre engines to 4.5 Bosch above 8 litres. This applies up to 600 m altitude, 0.5 Bosch being allowed additionally for each 400 m above this.

Odour
Exhaust odour, like smoke, is a social problem of the diesel engine but is much more difficult to quantify. Nevertheless, a considerable amount of work has been carried out in this area, mainly using subjective testing with 'sniff panels' but also including chromatography in association with subjective testing.

Early work indicated that exhaust odour was related to aldehyde concentration but that it was dependent on the sulphur content of the fuel (6). Later work by A.D. Little has suggested however that only two groups of components are important in so far as diesel odour is concerned. One group is composed of aromatics such as alkyl benzenes, indenes, indans, tetralins and naphthalenes. The other group of components is composed of partial oxidation products of components found in the aromatic fraction of the diesel fuel. This work also suggests that the sulphur content of the fuel is not important (14).

Peak odour intensities have been found to occur at no load and full load while engine speed is not an important parameter (652). Comparisons

between two stroke and four stroke diesel engines gave much higher odour levels from two stroke engines. Later model two stroke engines with modified low sac volume fuel injectors had however similar odour characteristics to equivalent four stroke engines (653).

The high odour levels at no load, which can be accentuated at high speeds by misfire, can be minimised by advancing the injection timing at light loads to prevent misfire conditions. Steps taken to reduce smoke at full load by limiting the engine load will similarly reduce full load odour.

Major changes in fuel constitution, e.g. the use of a fuel with very low aromatic content, have been reported to give changes in odour characteristics. The use of such a fuel also gives a lower intensity of odour as compared with a normal No. 1 or No. 2 diesel fuel (655).

It has been stated that the levels of exhaust odour found in a Mercedes diesel car are not low enough to prevent a significant amount of objectionability (654), but so far as Ricardo are aware, exhaust odour from light duty engines has not been a serious cause of complaint in Europe even in taxi service where the density of such vehicles can be quite high in congested urban areas. While it is very difficult to estimate the likely effect of a large increase in the density of such diesel vehicles, it would seem reasonable to assume that densities in American cities up to those found in Europe should not cause offence.

Experimental work has been carried out with catalytic exhaust mufflers (653). These have been shown to reduce odour under idle and acceleration conditions but have no effect on other loads. Such mufflers are believed to have been used on some bus fleets.

As diesel fuel does not readily evaporate, fuel odours can be detected in diesel engined vehicles as a result of bad housekeeping. It is essential to make sure that there are no leaks from the fuel system and there is no spillage when refilling the fuel tank. With these precautions such fuel odours should not be detectable.

Gaseous Emissions

The three major gaseous pollutants are NOx, CO and HC. NOx is largely formed as NO but also contains small amounts of NO_2. Only the NO is

measured if the exhaust is metred by means of a non-dispersive infra-red analyser. HC will contain a very wide spectrum of hydrocarbons of all types, some of which will be of similar form to those found in the raw fuel while others will have partially oxidised or otherwise changed in the engine. They arise from incomplete combustion of the fuel.

The oxides of nitrogen are formed from the constituents in the air although it has been suggested that dissolved nitrogen in the fuel can play an important part. The oxides of nitrogen are formed under high temperature and pressure conditions during the combustion part of the cycle. The rate of formation is highly temperature dependent and anything that can be done to reduce the peak cycle temperatures will reduce NOx levels. Unfortunately it is difficult to do this without loss of efficiency since this is also a function of peak cycle temperature.

The carbon monoxide levels produced by the diesel are very low, at least by gasoline engine standards, since the flame conditions do not favour this product of partial combustion under normal operating conditions. It is only when excessive fuel is injected and the controlled pattern of mixing and combustion breaks down that carbon monoxide emissions rise to significant levels. This can occur, although normally at fuel:air ratios above the limits set by legislative smoke requirements. Thus within these smoke limits, control of CO is not a problem and for example CO levels from a well developed pre-chamber engine are less than 5% of those emitted by non-emission controlled gasoline engines.

As has been explained, the hydrocarbons range from pure fuel through to complex aldehydes, oxygenated hydrocarbons etc., and at very high fuel:air ratios can include 3.4 benzpyrene, recently suspected as being carcinogenic. HC emissions can show apparently random variations across the engine operating range, mainly due to the extreme complexity of the reactions involved in chemical-kinetic terms. Sources are possibly the same locally over-rich flame zones responsible for soot formation and in some cases weak mixture zones in which the flame is unstable. Late admission of fuel is known to increase the levels significantly since the falling chamber temperature effectively freezes all reactions before combustion is completed.

Whereas NOx formation is the result of efficient, high temperature combustion (and is therefore difficult to reduce without seriously affecting engine efficiency), both CO and HC are the results of marginal

combustion conditions either throughout or within local pockets (sometimes on a molecular scale) of the chamber.

The diesel engine emits much larger quantities of one other gaseous pollutant than does the gasoline engine. This is SO_2 which arises from the sulphur in the fuel. Current diesel fuels contain up to 0.5% of sulphur while gasoline contains only about 0.05%. It is not possible to reduce the SO_2 levels by engine modifications, and while it would be technically possible to remove the sulphur during the refining process, the cost is likely to be high.

Effect of Combustion Chamber Type on Emissions

It has been recognised for many years that, when optimised for performance, the direct injection engine emits more HC, CO and NOx than does the indirect injection engine. As a number of authors have pointed out however, and as may be seen from Figure 4-6, the direct injection engine has a much steeper response of NOx reduction with retard of ignition timing, and at very retarded timing there is little to chose between the two types in so far as NOx levels are concerned. These degrees of retard of timing introduce excessive hydrocarbon levels however, and with naturally aspirated direct injection engines, the high smoke levels would involve excessive derating to maintain an acceptable exhaust smoke level.

Pischinger (21) selects the direct injection engine as a potential low emissions power plant because of the steep NOx/injection timing response and claims to prevent the onset of smoke by induction port and combustion chamber design modifications. As mentioned above however, in Ricardo's view the high hydrocarbon levels likely to result from the required degree of retardation will present a problem.

EPA tests on vehicles with prechamber (Mercedes 220D) and swirl chamber (Peugeot 504, Opel 2100D, Nissan Datsun 220c) engines have indicated no significant differences in the emission characteristics between these engine types although any engine may have high HC levels due to injection irregularities.

Effect of Engine Load on Emissions

As the load on most engines is reduced at constant speed, the specific hydrocarbon emissions increase. Similarly on all indirect injection engines and on many direct injection engines, the specific NOx levels increase with reduction of load. As a result, for a given power output, a larger, lower rated engine will have higher emission levels than will a smaller higher rated one. With a given vehicle weight therefore and driving over a fixed driving cycle, provided that all vehicles can drive the cycle, the one with the lowest power/weight ratio, i.e. the smallest engine, will have the lowest HC and NOx emissions. In general terms however there will be little to choose between their CO levels.

Turbocharging

In general, turbocharging without aftercooling gives somewhat higher NOx levels than those obtained with naturally aspirated engines. It will however clean up the smoke which otherwise would arise from retarded injection timing. If the compression ratio is reduced to limit maximum cylinder pressures, high HC levels may result at low load where the turbocharger is giving no effective boost.

With turbocharging and aftercooling, as has been shown by Walder (16), a reduction of NOx of approximately 20% is possible together with a smaller improvement in CO levels. The HC levels are unaffected.

Gaseous Emissions from Two Cycle Engines

As the majority of engines used in truck service are four cycle, the greater part of the data on emissions from diesel engines is from four cycle engines. The very successful Detroit Diesel 71 and 53 series are however through scavenged two cycle engines and available data indicates that these engines have similar levels of NOx and HC emissions to four cycle engines. It may be inferred therefore that both through scavenged two cycle and four cycle engines have similar emissions levels.

So far as Ricardo know, there is no data available for the exhaust emission levels from loop scavenged two cycle engines. With exhaust

ports, oil control and hence HC levels may give problems and, with less effective scavenging, smoke and hence CO levels may tend to be higher than with through scavenging, unless severe derating be employed. On the other hand, the internal exhaust gas recirculation inherent in poor scavenging should give lower NOx levels although there will be of course no cooling of the recycled gas.

NOx Reduction

The most effective way of reducing the quantity of NOx in the exhaust is to retard the injection timing. On a direct injection engine however retarding the timing leads to an increase in smoke levels and hence for a constant smoke limit it is necessary to reduce the power output of the engine. Some improvement is possible by retarding the timing and increasing the rate of injection. This can lead to reduced levels of oxides of nitrogen with less derating of the engine but normally there is still some loss of efficiency.

On indirect injection engines, at least over the range of injection timings of interest, smoke levels reduce as the timing is retarded, and hence there is no need to derate the engine. There is still however a loss of efficiency due to the retardation of timing.

Apart from injection timing retard, there are two other effective methods of NOx reduction. One is by recirculation exhaust, preferably after cooling it, and the other is by water injection either with the induction air or as an emulsion with the fuel. Both methods reduce the temperatures within the charge and EGR also reduces the oxygen available to react with the nitrogen in the air.

Exhaust Gas Recirculation

The effectiveness of exhaust gas recirculation in reducing NOx has already been proven beyond doubt by many authorities with both light duty (647) and heavy duty(6, 16, 12) cycles but durability, particularly that of the lubricating oil, has yet to be established. From data available to Ricardo, there are indications that at high exhaust recirculation levels the wear rate of engine components may be higher than without such recirculation. There is insufficient data however to predict whether or not a problem will arise from such wear although

oil thickening is likely to be a problem with a consequent need for frequent oil changes.

By reducing the oxygen available for combustion, exhaust gas recirculation results in a need for derating to avoid excessive smoke. Fig. 4 -7 demonstrates the smoke response of an IDI engine over the load range with varying amounts of EGR. It will be noted that increasing recycle rates significantly reduce the smoke limited performance of the engine while the fuel consumption is unaffected. Assuming therefore that the engine is rated near to its smoke limit without EGR, no appreciable improvement in full load emission levels can be achieved using recycled exhaust unless the engine is derated. As load is reduced, increasing amounts of recycle gas may be introduced.

The scope for such modulated exhaust gas recirculation will vary from engine type to engine type. With indirect injection, the NOx emissions actually rise with reducing load for some way down the load range and hence modulated EGR can be very effective. With direct injection however, where the NOx levels fall quite rapidly with load, the effect of modulation is less pronounced (Fig.4-8).

Turbocharged engines, with both direct and indirect injection, have rapidly falling NOx concentrations (Fig. 4-9) with reduction in load but normally have a considerable excess of air for combustion at full power conditions. Hence there is little need to restrict exhaust gas recirculation at full power. There may however be smoke problems at the maximum torque speed as derating here will make the torque curve from the engine less attractive.

It must be remarked however that when driving a light duty vehicle with a high power/weight ratio over the CVS-CH test procedure, the engine will not run at full power and modulation of exhaust gas recirculation to reduce NOx at these conditions may not therefore be necessary.

Water Injection

Water injection has been found to be a powerful agent for reducing NOx (6,16), but there are major problems in practice in applying this method. The major advantage is that significant reductions in NOx can be obtained with no loss in engine performance.

Problem areas are:-

A water tank approaching the size of the fuel tank is required, the actual size depending on the proportions of water/fuel employed.

Antifreeze is necessary in winter and this may lead to HC problems. When Ricardo experimented with alcohol as an antifreeze the exhaust hydrocarbons were excessive.

To guarantee low emission levels it is necessary to incorporate a mechanism to shut the engine down in case of failure of the water injection system.

Cylinder liner corrosion and wear and/or lubricating oil contamination with water may be a problem.

Some experimental work is being carried out with injection of water/fuel oil emulsions. This may overcome some of the problems but it will probably be very difficult to obtain acceptable stability of the emulsion. Either partial or complete breaking of the emulsion would be disastrous from a fuel handling and engine operating point of view.

Reduction of NOx by Reduced Engine Compression Ratio

It has been suggested that one way to reduce NOx levels would be to run the diesel engine at a low compression ratio. In Ricardo's experience however, the lowest overall levels of HC and NOx are obtained at high compression ratios, due to the onset of misfire at light loads and starting when using a low compression ratio. This results in high HC emission levels. The use of more effective starting and ignition aids has been proposed to overcome this but to the best of our knowledge no-one has yet successfully demonstrated such a device.

Emissions under Light Duty Cycle (CVS-CH) Conditions

While, as has been pointed out earlier, the power/weight ratio of current light duty diesel engined vehicles is much lower than is necessary to satisfy the performance requirement for this survey, it is of greatest interest to look at results from vehicles operating under the CVS-CH cycle test procedure in order to predict emission levels for a diesel engined passenger car.

The literature contains a large number of references relating to the effect of engine variables on diesel exhaust emissions when operating over the 13 mode steady state test procedure. There are unfortunately however only a very small number relating to light duty CVS-CH cycle testing. Furthermore, in Ricardo's experience there is no constant relationship between 13 mode and CVS-CH test results so that it is not possible to read directly across from one to the other. Despite this, there is in general terms a relationship between the two types of testing in that parameters which tend to reduce emissions in one test are very likely to do so in the other.

Although Ricardo have some data arising from tests which they have carried out for their clients, very little additional CVS-CH data has been found apart from EPA tests on standard European diesel cars and one Mercedes 220D with modified injection equipment. All these vehicles have indirect injection engines. The results of these tests are summarised in Figure 4-10.

One other report on light duty emissions tests on diesel vehicles covers comprehensive tests by Daimler Benz on an experimental vehicle. After considerable development and using high rates of exhaust gas recirculation the secondary target levels were just achieved. Significant reductions in HC and CO levels were obtained by the introduction of a catalyst into the exhaust system and HC levels were reduced by modifying the fuel injection equipment (647).

All of the light duty vehicles tested are somewhat lighter than the specified 3500 lb car for this study. In addition, power levels are much lower and in fact the vehicles are only normally just able to drive the cycle.

To a first order of accuracy, the emissions in g/mile when driven over a fixed cycle and with the same power/weight ratio for each vehicle, will vary with the weight of the vehicle. Furthermore, since specific NOx and HC levels on indirect injection and many direct injection engines rise as load is reduced, an increase in power/weight ratio will increase the emissions from the vehicle when driven over a fixed cycle.

The best emission levels which have been obtained from current generation diesel engined light duty vehicles are:-

HC	0.2 g/mile
CO	1.5 g/mile
NOx	1.5 g/mile

HC levels of 0.21 g/mile have been achieved by EPA on a standard Nissan Datsun 220c and Ricardo tests on other vehicles have indicated that substantial reductions in HC levels can be achieved by minor modifications to fuel injection equipment without altering engine performance characteristics. Thus it is felt that the HC emission levels of 0.3 - 0.4 g/mile achieved in the Mercedes and Opel vehicles could be reduced to circa 0.2 g/mile.

As a result of applying a correction factor for vehicle weight and increased engine size, predicted emission levels from a 130 bhp 3500 lb inertia weight vehicle over CVS-CH cycle are:-

HC	0.4 g/mile
CO	3.0 g/mile
NOx	2.0 g/mile

Timing retard will reduce NOx levels to the order of 1.2 g/mile without seriously affecting CO levels. Combustion noise levels in this retard mode should be lower and vehicle driveability will be unaffected. The fuel consumption will probably increase by about 10%, water jacket heat losses will remain constant but blue smoke and misfire and hence HC levels, particularly when cold, may be a problem. Some form of temperature sensor controlling injection advance at light load may be necessary to control this.

Some further reduction in HC and CO levels may be possible by optimisation of the gear ratios within the transmission. Some preliminary tests by Ricardo on a diesel powered vehicle in which gear ratios were altered showed substantial benefits could be obtained by changing from a four speed to a three speed gear box. The tests were in fact run with the standard four speed box but in the second run first gear was not used, but all gear change points were selected as if the gearbox were of standard three speed form. While the NOx emissions were unaffected, the HC and CO levels were reduced by approximately 50%. While as large a change as this might affect the ability of the vehicle to give the target performance, transmission ratio modifications must be regarded as a possible method of reducing HC and CO levels from diesel vehicles.

The secondary project objectives, i.e. to obtain 0.4 g/mile NOx, are very much more difficult to achieve. Daimler Benz have already demonstrated a passenger car (647) which just attains this level in a highly modified build, but with no room for production variations or deterioration throughout the life of the vehicle. The level of 0.4 g/mile was only achieved with 'increased' EGR flow rates (exact value not known)

and although the value of EGR in terms of effectiveness in reducing NOx is not questioned, engine durability with high recycle rates has yet to be proved. The practicality of achieving this level of NOx with a production solution in a European type car is very much doubted and the chances of achieving 0.4 g/mile NOx with even a prototype version of an American type high-powered vehicle are thought to be very remote.

In summary, a 97 kW (130 bhp), conventional naturally aspirated swirl chamber diesel engine in a practical 3500 lb vehicle should be able to achieve the project target emission levels of CO 3.4 g/mile, HC 0.41 g/mile and NOx 1.5 g/mile with timing retard and relatively minor modifications to the fuel injection equipment. Some EGR may be necessary to ensure a sufficient margin for production compliance. A less powerful engine in the same vehicle would result in the additional benefits of lower HC and NOx but an inability to meet the performance requirements.

Particulates

With its complex heterogeneous combustion, local rich areas leading to particulate emissions must exist in diesel engines. It has been postulated by Wheeler in an unpublished Ricardo note that it is in these rich areas immediately surrounding the fuel droplets that pyrolysis occurs forming graphite sub particles of great reactivity which subsequently oxidise rapidly upon meeting freely available oxygen or coagulate into clumps like strings of beads. If the latter happens slightly quicker than the former then soot escapes from the chamber still actively coagulating. Even the highest temperature black soot is still a hydrocarbon containing about 3% hydrogen by weight (C_8H_3). The most important property of this soot is its high absorptive capability for all active molecules. Thus as it cools and its attraction increases it absorbs first high boiling hydrocarbons, then lower boiling, then aldehydes and other oxygenates, then SO_2 and finally when down to ambient temperatures, fill-in of the remaining 'holes' is completed by water molecules.

As mentioned in the smoke section, the droplet aerosols of blue and white smoke are also products of very incomplete combustion (in this case mainly due to marginal temperature conditions within the cylinder).

Thus there are two completely separate particulate problems in the diesel engine, blue/white aerosol emissions at low load which can be relatively easily removed by engine modifications, and the gas carbon (soot) formed by pyrolysis in rich areas which increases as stoichiometry is approached and is regulated by legislation limiting its visual appearance.

Californian suggested legislative levels were set at 0.1 g/mile. This level was originally intended for enforcement in 1975 (383). Typical diesel powered, European type passenger cars appear to emit particulates in the order of several times this level (0.5 - 3 g/mile) and it is difficult to envisage practical methods of reducing particulate levels at source. A few authorities, notably Berliet, (649, 650) have attempted to develop soot filters. Their early system used Kaowool as a filter element, this being impregnated with an oxidation catalyst. More recently, it has been shown that the catalyst is not necessary for burning off the carbon particles, although it is of some secondary use in that it can oxidise the CO resulting from the carbon burn off to CO_2 (as well as oxidising the in cylinder generated CO and HC).

The pure filter (i.e. non catalytic) system works by reason of the fact that the residence time of the soot particles is increased sufficiently to allow natural burn off to occur. With burn off occurring at 450 - 500°C (i.e. at a high load factor), the major problem behind the development of a practical system is the incorporation of a sufficiently large storage system in the exhaust to trap and store (hold) soot particles emitted at part loads without causing excessive exhaust back pressure increases in typical duty. It is in this area that much research would be necessary into vehicle operating modes and engine smoke characteristics before a system could be developed for production.

To sum up therefore, at present the only controls on the particulate emissions from diesel engines are in the form of smoke legislation and most modern engines have been developed to comply with the most severe of these (U.K. smoke regulation based on recommendation BS AU 141a). Californian suggested particulate controls of 0.1 g/mile over the CVS-CH cycle are much more severe than this, current diesel engines emitting 0.5 - 3 g/mile, and in order to comply with 0.1 g/mile levels it would be necessary to develop a soot filter system. Much development would be necessary to ensure a sufficient storage volume for particulates emitted at light load and at below burn off temperature.

Noise

To the passer-by the noise of the engine is probably the first obvious indication that a particular vehicle is fitted with a diesel engine, and for this reason it is an obvious cause of consumer resistance. The larger the vehicle the greater is the likelihood that the engine will be of direct injection form and the more obtrusive the noise to be. However, the smaller high speed diesel engines fitted to passenger vehicles and delivery vans will probably be of indirect injection form and consequently less noisy (34). Although little direct comparison is available, the indications are that for a similar size, the IDI engine may be up to 5 dBA less noisy than the DI under standard drive-by test conditions (39) and a comparison with a gasoline powered vehicle shows an increase of 2.5 dBA for the diesel after direct conversion from gasoline to a Ricardo Comet type of diesel engine (142) (Ref. 112 shows a predicted 2 dBA increase, Ref. 479 shows a predicted 4 dBA increase).

Noise at idle conditions is a prime consideration as, although the absolute levels may be low, the characteristic of the noise is subjectively annoying and of much greater impact than for gasoline engines, especially for passenger vehicles (18). Comparisons have shown the diesel to be considerably more noisy than the gasoline engine at idle (2) but these tests were carried out on a four cylinder engine where low frequency vibration of the diesel due to torque reaction under high compression ratio conditions, since the engine is not throttled when idling, gave subjectively a harsh idle characteristic. This problem would be largely eliminated in a 6 or 8 cylinder engine and the idle noise would be less objectionable but would still be very pronounced as compared with a gasoline engine.

It has been shown that the majority of noise in the diesel engine is combustion generated and it follows therefore that modifications to the combustion and/or fuel injection system which gave a smoother pressure diagram, would result in a quieter engine (2, 3, 631). These measures include the use of pilot injection (2, 33, 89, 200), injection timing changes (2, 201, 221, 324), nozzle changes (454) and injection rate changes (3, 200). For instance, refs. 2, 33, 89, and 200 quote reductions of 2 - 5 dBA using pilot injection, and refs. 201 and 324 quote reductions of $1\frac{1}{2}$ to 4 dBA with up to 6° injection timing retardation. Although pilot injection is known to reduce the noise by modifying the pressure diagram its application, in practice, has not been achieved over the whole load and speed range of an engine due to the variable fuelling characteristics of current fuel injection equipment and the difficulty of obtaining an accurate balance

between cylinders. The effect of injection equipment in reducing the characteristic diesel clatter (164, 2) is important at idle conditions, and one manufacturer (Peugeot) has introduced a device which effectively reduces the injection rate at idling.

Attention to the compression ratio is important in keeping combustion noise to a low level. Refs. 153, 201, 253 and 531 report significant reductions in noise with increases in ratio. (201 reports 1 dBA reduction with CR increased from 18 to 20 in a Ricardo Comet combustion chamber).

Fuel quality is also important in keeping diesel knock to a minimum. Low Cetane number increases the noise level due to poorer ignition quality and therefore longer delay between injection and combustion, resulting in a more rapid pressure rise (2, 131, 243). However, no advantage is to be gained above about 55 Cetane.

Noise of the engine is caused by vibration of the outer surface resulting from forces within the engine being transmitted by the engine structure to the outer surfaces. It follows therefore that reduction of noise can be achieved by modification to these forces and to the transmission paths, and by structural changes, bringing about a reduction in the vibration of the engine outer surfaces. Much research has been, and is being, carried out on noise reduction by attention to engine construction and many papers have been published including those by Priede (83, 301 etc.), Jenkins (4), List (48) and Scott (2). In addition researchers have investigated the effects of changes to piston pin offset (3, 378, 380), valve mechanisms (23, 377) and timing gear drives (2), but the main conclusions are that more noise reduction can be obtained by attention to the engine structure than by other means.

By isolation and damping of the unstressed cover, a noise reduction of 5 - 8 dBA has been achieved (53, 111), others record 3 - 5 dBA reduction (23, 84). By using a complete 'structured' engine (174, 4) up to 10 dBA reduction in noise was obtained. However, this engine was of experimental form, having a stiff frame containing the crankshaft and cylinders, with the areas in between covered with non-vibrating material, and it is not a practical manufacturing proposition at the present time. Future engines, however, may show a trend towards 'unconventional' construction techniques if noise limiting legislation becomes more severe.

In order to reduce the noise of existing engines, in addition to isolation and damping of the unstressed parts of the engine as above, resort may be made to shielding and enclosures. Much research has already been carried out on these techniques and it has been shown that 5 - 8 dBA reduction may be obtained by shields to the engine (23, 267, 174, 84, 272, 371, 373), and by total enclosure up to 20 dBA reduction has been obtained (23, 83, 84, 375). These experiments were mostly carried out on the test bed where conditions are ideal but, when attempting to shield or enclose an engine in a vehicle, a more difficult situation arises. It has been shown that 5 - 6 dBA reduction can be obtained under these conditions however (275), although such a system of shielding or enclosing increases the problems associated with maintenance.

Priede (83) has shown that engine noise can be calculated using an empirical prediction formula, i.e. the noise (dBA) of a diesel engine at 1m = $30 \log_{10} N + 50 \log_{10} B - 48.5$, where N is the engine speed in rev/s and B is the cylinder bore diameter in mm. This applies to a 4-stroke normally aspirated engine. Variants of the formula can be used to predict noise values for gasoline engines, 2-stroke engines and boosted engines. These formulae show that the noise of the engine is a function of the rotational speed and cylinder bore diameter, and ref. 83 concludes that for a lower noise engine a configuration of small bore, more cylinders, lower rotational speed and turbo-charging would be desirable. Experience has shown that drive-by and test bed noise can be related and that the noise of a vehicle at 7.5m is some 15 - 17.5 dBA less than an engine at 1m. This relationship is dependent to a certain extent on the installation in the individual vehicle due to variabilities in shielding by bodywork etc.

To keep vehicle noise to a minimum, careful attention should be paid to the design of exhaust and intake silencers. It should be noted that the intake on a diesel is unthrottled all the time (367). Optimisation of silencing systems can more rapidly be carried out by use of a computer aided silencer design program.

It is likely that radiator fan noise could be a problem in both gasoline and diesel powered vehicles (175, 373), and the use of thermostatic control devices would aid the solution. With air cooled engines fan noise can be excessive but by careful design this can to a large extent be overcome (43, 257). Air cooling may have other advantages, for instance the ducting system could be used as a noise shield if careful attention was paid to design.

Interior noise can be a considerable problem in diesel engined passenger cars unless care is taken. All the measures mentioned above would reduce the amount of noise transmitted to the interior and particular attention should be paid to engine mountings to prevent vibration - particularly at idling conditions. Most of the published data on interior noise is concerned with commercial vehicles but a small amount of passenger car information is available (142) and shows an increase of 2 - 3 dB over the gasoline version of the vehicle at 48 km/h (30 mph) and $3\frac{1}{2}$ - $4\frac{1}{2}$ dB at 80 km/h (50 mph). During acceleration the comparisons were as follows: 48 km/h (30 mph) 3 dBA louder, 80 km/h (50 mph) $2\frac{1}{2}$ dBA louder and 113 km/h (70 mph) $1\frac{1}{2}$ dBA louder. The latter figure suggests that at speed the diesel car is less noticeably noisier than the gasoline version and with more efficient sound insulation would be no noisier. Provided the small diesel vehicle is constructed in such a way that the engine noise is not too obtrusive, there is little reason, on grounds of noise level, why such a vehicle should not be acceptable.

Volume

The close physical resemblance between the diesel and gasoline engine results in very similar specific box volume when the comparison is made on the basis of swept volume. Due to the slightly increased block height (to ensure adequate piston compression height) and the greater need for water cores between cylinders, the diesel is however slightly bulkier than its gasoline counterpart. The cylinder head of the diesel engine may also be slightly deeper due to its increased complexity.

When however a comparison is made on the basis of engine power output, the diesel suffers a large penalty. This, as emphasised in the next section, is due to the substantially higher specific output of the gasoline engine. As a result, the gasoline engine may have to be compared with a naturally aspirated diesel engine of some 50% higher swept volume.

Increasing the specific output of the diesel by boosting would reduce this disadvantage although it is likely that there would still be a height penalty against the diesel (depending on engine configuration). The improvement would be achieved at the cost of the increased technological requirements of the engine (higher cylinder pressure demanding more sophisticated gasket materials and stud patterns as well as higher thermal loadings leading to the necessity of oil cooled pistons, oil

coolers etc.). It is felt that reduced box volume alone is insufficient to warrant this degree of complexity although the attendant reduction in engine weight may be.

Forthcoming U.S. Vehicle Safety regulations are likely to have an effect on engine length with a need to allow sufficient crush space and it may be in this area that the diesel is at its greatest disadvantage with regard to physical size, although the use of the vee configurations in order to minimise length is equally applicable to the diesel as it is to the gasoline engine.

In conclusion, the diesel in its naturally aspirated form has a significantly larger box volume than a gasoline engine of the same power output. Boosting the diesel would reduce this penalty but it is debatable whether the increased engine complexity is warranted by reduction in box volume alone. Due to the normal excess hood space in cars of this class, this is not considered a major problem area although the introduction of severe vehicle safety regulations may demand extra hood length for the diesel powered passenger car, thus incurring a first cost and fuel economy penalty.

The increase in volume over the gasoline engine will be of the order of 50% which, assuming similar bore/stroke ratios, will give an increase of linear dimensions of 12%.

Weight

Experience with European powerplants and engine conversions reveals that for reasons explained in the last section, there is only a small difference (12 - 18%) in the specific weight of the two when the comparison is made on the basis of swept volume (648 and Figs. 4-11 and 4-12). Important reasons for the increased weight of diesel engined vehicles are the weight of most diesel engine accessories (starter motor, generator, fuel injection equipment, battery etc.) which are substantially greater than their gasoline engine counterparts - approximately 30% of the total engine weight penalty in Fig. 4-13 (648) being due to the extremely large, heavy duty battery fitted to the diesel powered vehicle.

For a given application, the dominant factor governing the relative weights of diesel and gasoline engines however is that of specific power output.

Because of its heterogeneous combustion mode, the high speed indirect injection engine can use at most 90% of the air available within the cylinder without exceeding socially acceptable levels of exhaust smoke, and engines with other combustion systems would use substantially less. The gasoline engine is capable of consuming and efficiently using 100% of its air charge; this, combined with its lower friction losses (Curve No. 5, ref 648) and higher useful operating speed accounts for the much higher specific power output of the gasoline engine in terms of bhp/litre.

Fig. 4-14 (Fig. 4 from 648) demonstrates the difference in specific power output between the two engine types. At best the high speed diesel engine delivers 24 kW/litre (0.5 bhp/in^3) whilst its European gasoline counterpart delivers a minimum of 30 kW/litre (0.65 bhp/in^3). Many American cars do in fact have a somewhat lower rated gasoline engine, of similar specific output to the diesel engine, but current American compact cars are powered more closely following 'European philosophy' although they are normally somewhat heavier.

A greater use of aluminium components would go some way to reducing the weight penalty at the expense of cost but it would of course be open to the gasoline engine to move in the same direction. Alternatively, boosting of the diesel engine can be employed although any disadvantages of this must then be accepted.

For the 1600 kg (3500 lb) vehicle under consideration, it is estimated that an engine power output of 96 kW (128 bhp) is required to enable performance targets to be achieved. Current American gasoline engines of this output would have a swept volume of about 4.5 litres (275 in^3) and would weigh about 250 kg (550 lb). It would however be possible to produce a more compact gasoline engine of about 3 litres (180 in^3) which would produce 96 kW (130 bhp) at 80 - 100 rev/s and would weigh about 186 kg (410 lb).

Fuel Economy

The fuel consumption of U.S. cars has been increasing over the years due to increases in vehicle weight and engine size as a result of increases in vehicle size and the fitting of automatic transmissions, air conditioning and emission and safety devices (461, 464). The standard size Ford sedan weight increased for example from 1610 kg

(3550 lb) in 1965 to 1940 kg (4275 lb) in 1973, and it was necessary to increase the engine size from 5 litre to 5.75 litre (300 to 350 in^3). Over this period the fuel economy deteriorated by 20% (463).

The demand for gasoline in the U.S. is predicted to increase by 50 - 70% between 1973 and 1985. Three possible ways to moderate this growth in fuel demand and still protect air quality criteria are:-

1. Wider use of mass transportation and car pools
2. Use of smaller cars
3. Use of diesel cars (461)

Of various methods considered to conserve transportation energy, the greatest saving can be achieved by conversion to small cars and economy vehicles (467).

The calculated peak thermal efficiency for ideal engines shows the gasoline to be 45% and the diesel 55%; the diesel advantage increases however under low load conditions (20). The fuel economy gain by the diesel diminishes as the engine speed is increased due to the higher friction and pumping losses (18).

While there have been a limited number of models of light duty diesel engined vehicles in service, there are a considerable number of references to the comparative fuel economies of diesel and gasoline engined vehicles. Typical data are given in the following extracts from the literature:-

> The potential saving in fuel for the diesel as compared to the gasoline vehicle is 5% for highway driving, 30% for mixed duty and 50% for taxi cab service (479).
>
> Early London taxi company fuel consumption data suggested diesel taxi 11.1 l/100 km (21.2 mpg) against 21.4 l/100km (11 mpg) for gasoline, the diesel figure being taken over 8.8×10^6 km (5.5×10^6 miles) but gasoline figures are likely to have improved since that time (15).
>
> Fuel consumption for Paris vehicles, 11.3 l/100 km (20.8 mpg) for diesel and 15.7 l/100 km (15 mpg) for gasoline (15).
>
> In London taxi service the gain in mpg is almost 2:1 for the diesel over gasoline. In general use the diesel engined car

is 30 - 50% better than gasoline (112).

By fitting diesel engines in place of gasoline engines in U.S. Post Office ½, 1 and 5 ton vehicles, fuel economy increases ranging from 18/23%, 10/28% and 150/180% respectively were obtained, in controlled tests at Aberdeen Proving Ground. From vehicles in actual service, the ½ and 1 ton vehicle economy was 50% greater than the gasoline (31).

From customer and service records, 770 kg (1700 lb) vans fitted with Perkins 4-99 engines used for local delivery, municipal work and distance haulage showed fuel economy between 71.5 and 129.8% better than gasoline engined vehicles (363).

EPA tests carried out on diesel engined cars - Mercedes 220D, Opel Rekord 2100D and Peugeot 504. Diesels give 70% better fuel economy than gasoline, by the same test procedures (191).

Ricardo measured road fuel economies of three different model diesel engined cars were as follows:-

Litre/100 km	mpg (country route)	litre/100 km	mpg (town)
7.0	33.8	8.9	26.3
5.9	39.8	7.2	32.8
6.0	39.4	8.2	28.8

Reference 490 gives constant speed consumption.

	Peugeot 504		Mercedes 220D		Opel Rekord	
	litre/100km	mpg	litre/100km	mpg	litre/100km	mpg
60 km/h	5.0	46.6	4.9	47.9	5.3	44.6
80 km/h	6.1	38.7	5.8	40.5	6.3	37.5
100 km/h	8.0	29.2	7.2	32.5	7.8	30.0
120 km/h	10.3	22.8	8.7	27.1	9.9	23.8
140 km/h	12.2	19.2	11.4	20.6	11.6	20.2

Austin A40 - measured fuel economy 45% better with diesel than with gasoline engine (198).

Comparing direct injection and indirect injection diesels of the same cylinder size, the DI has no significant fuel advantage over the IDI for automobile use. The DI gives about 10% better fuel economy on the test bed but no difference on the road. This is due it is believed to the ability to hold on longer in a high gear with the high torque of the indirect injection engine.

To sum up therefore, the features of good fuel economy combined with relatively low emissions are the major arguments for the case of diesel powered passenger cars. In practical terms the fuel economy advantage of the diesel is at its greatest at the light load end of the engine operating range. European experience has shown significant economic gains in the use of diesel powered vehicles particularly for light load, local delivery and in city use. Rising fuel prices as well as increasing service costs are steadily increasing this advantage.

Actual fuel economy gains of the diesel vehicle over its gasoline powered cousin are difficult to quantify because of the dominating effect of vehicle operating mode. European in-city use has revealed fuel economy gains of 50% to 100% in terms of miles per gallon. In general use this improvement reduced to 30 - 50%. No figures are available from vehicles with a significant highway driving mode but it is felt that such vehicles would return fuel economy advantages of less than 25%. EPA data comparing diesel with gasoline powered vehicles on a simulated inertia weight basis showed that economies of approximately 70% (again mpg) were realised (Fig. 4-15).

In the prototype vehicle, the high power/weight ratios must cause the engine to be driven at light specific load factors and will also allow higher gear ratios to be used, resulting in the use of low average engine rotational speeds. Both these factors should enhance the fuel economy advantage of the diesel (as opposed to comparing two equal but low powered diesel and gasoline vehicles where the high load factor and rotational speeds would tend to minimise the advantage of the diesel).

Although current European diesel powered vehicles comply with the project emission targets while in production build, the high powered heavier prototype vehicle will need engine modifications to ensure compliance with the primary project targets. Data obtained from the European vehicle suggests that if similar technology engines are used, large amounts of timing retard will be needed to better 2 g/mile NOx and a small but significant fuel economy penalty will be incurred.

Assuming approximately 10° injection retard is used over the lower half of the useful torque band, the resultant fuel consumption penalty at steady state conditions would be in the order of 8 - 10%. In real life driving conditions the penalty in fuel economy would be less, probably 5 - 8%.

Fuel

It must be remembered that some 16% or so of the increase in miles per gallon between the diesel and gasoline engined vehicles arises from the higher density and corresponding higher calorific value of diesel fuels as compared with gasoline. Whether this is a real gain which can be fairly attributed to the diesel engine can only be decided from a study of the energy economies of the production of distillate fuels from crudes.

The world consumption of mid-distillate fuels is increasing rapidly in both the under-developed and in the highly industrialised countries. In those countries in the early stages of industrial development, the directing of the greater part of their resources into construction channels is reflected in measures taken to encourage the building of all types of vehicles which use diesel engines and the discouragement, by discriminating taxes or other means, of the manufacture of motor cars for private sale and pleasure use. In highly industrialised countries which have a moderately or very cold winter, space heating of all new and many old buildings is increasing, with a consequent increase in demand for light distillates for the heating installations (277).

The use of residual fuels is becoming less popular due to their high sulphur content and there is a trend towards the use of lower viscosity fuels, i.e. the mid-distillates (192).

In the U.S., crude oil consumption is increasing at a rate of 100 million barrels/year, and the estimated increased demand for mid-distillate fuels is some 44 million barrels/year. By changes in refinery techniques it would be possible to double the current production of mid-distillates at the expense of gasoline and residual fuel production. By means of these changes in refinery techniques and based on the projected 1978 U.S. consumption, it is estimated that the production of automotive diesel fuel could be increased from 130 to 1610 million barrels/year, i.e. a 12-fold increase (194).

Widening the cut of mid-distillates would give a fuel having a lower Cetane number and flash point and an increased aromatic content. The reduction of Cetane number would adversely affect noise and starting (173). The increased aromatic content would result in some increased engine wear (640).

For the high speed diesel engine the most important fuel qualities are:-

1. High ignition quality to give short ignition delay and good cold starting.

2. A boiling range which will give the highest possible air utilisation and ease of starting combined with a minimum of deposits.

3. Flash point low enough to enable use of the volatile fractions.

4. Vapour pressure low enough to avoid vapour lock.

5. Sulphur content generally below 1%.

(555)

(Ricardo Note:- The level of this last item will probably be driven down by future legislation).

Amyl Nitrate is an ignition accelerator for diesel fuels - its use would effectively increase the Cetane rating of the fuel.

Barium based additives are very effective in reducing diesel exhaust smoke although this effectiveness varies depending on the engine design. (109). However, these anti-smoke additives are not attractive because of pollution problems concerning particulates (173).

A series of tests carried out at South West Research Institute on a railroad engine operating on propane as fuel was suspended before satisfactory operation had been achieved (537).

On transit vehicles it is claimed that the use of propane results in reduced fuel costs compared with diesel or gasoline vehicles. It is also claimed that with propane as a fuel, engine wear and maintenance is less and there are no problems with smoke andodour (541).

(Ricardo Note: - This last item refers to spark ignition propane engines - the use of propane in diesel engines does not appear attractive).

Fuel at Low Temperatures

When fuel is cooled between cloud point and pour point, some paraffinic constituents preciptate as wax crystals and can accumulate in fuel systems causing fuel starvation. Flow improving additives alter the crystal growth to give better cold flow (643).

Flow improvers give crystals which are smaller, less cohesive and do not form a gel structure. These improvers do not alter cloud point or the quantity of wax which separates. (642)

The flow of automotive diesel fuel at low temperature can be improved by fuel dilution with kerosene.(314)

First Cost

The manufacturing cost differential between gasoline and diesel engines is difficult to establish, in part because manufacturers who make both types will seldom provide the necessary breakdown of costs. The selling price of diesel vehicles may be no guide to the manufacturing cost, being more an indication of what the market will stand or a means of controlling the extent of the market. The relative production quantity affects the cost of the engine and also that of the fuel injection equipment which forms a major item in the increased cost. The data available indicates that in Europe the light duty diesel engine costs 50% more to produce than the gasoline engine. About half of this increase is the cost of the fuel injection equipment. The remainder is attributed to the greater complexity of the engine design in the combustion chamber region, superior materials, larger starter motor etc. (479).

Three reasons account for the present difference in cost between the diesel and gasoline engines: greater weight and complexity, closer manufacturing tolerances on some parts, and more limited scale of production (277).

First cost is inevitably influenced by the number of engines built and the degree to which common tooling can be used between diesel and gasoline versions of a basically common engine. The diesel is likely always to be more costly than the gasoline engine for the following reasons:-

1. Unless there is a major breakthrough to some simpler form of injection equipment, the cost of this item will be higher than for gasoline engine ignition system and carburettor.

2. Because of the higher cylinder pressures in the diesel, some of the basic engine parts need to be stronger and due to the combustion chamber form the cylinder head will be more complex.

3. Because of the heavier starting load, the starter motor and battery will need to be larger. (15)

For the diesel engined vehicle the difference in cost will be of the order of 8 - 15% depending on the scale of production and on whether or not a basically common design with common tooling is used for the engine (15).

Ricardo believe that comparing British engines of equal capacity, i.e. 1.6 litres (98 CID) in four cylinders developing 37 - 54 kW (50 - 72 bhp) respectively, the difference in cost between the diesel and gasoline engine is approximately $ 120. Of this difference over half is accounted for by the increased cost of the fuel injection equipment and starting aid compared with the cost of the ignition system and carburettor for the gasoline engine.

Increasing the power output of the diesel engine to equal that of the gasoline engine, either by increasing the engine capacity or by turbo-charging, will increase the cost of the diesel engine by $ 120.

This high first cost is one of the few economic disadvantages of the diesel engine. Basically it is this initial penalty that the improved fuel economy of the diesel must overcome before the economic advantages of this engine type can be realised, although the longevity, reliability and fuel economy advantages of the diesel should reduce the depreciation rate of the vehicle compared with a gasoline powered car unless the limit is set by body deterioration.

Investigation of available data therefore reveals the major contributory causes to the current first cost penalty of the diesel to be:-

1. Lower specific output
2. Complex fuel injection equipment
3. Relative production levels
4. Greater complexity

From the limited data available to Ricardo, it is estimated that the true production costs of European automotive diesel engines are approximately 2 - 2½ times that of a comparable (non-emission controlled) gasoline engine. These figures are representative of true current production costs, therefore production volume could have a large influence. Absolute cost figures are not known with authority but it is felt that the true production costs of current high volume European diesel engines are probably in the order of $ 3.25/kW ($ 2.4/hp). The cost of fuel injection equipment for the diesel engine is obviously far higher than for ignition/carburation systems, and although the general technology and in particular production tolerances on injection equipment are far more severe than in any other section of the engine, the basic design for most components (for example pumping elements, control valves and injector nozzles) lend themselves to high volume production. Thus increased production levels could reduce not only bare engine production costs, but also those of ancillary equipment and in particular fuel injection equipment. Further, the cost of fuel injection equipment does not increase pro rata with engine power output, whether this is achieved by larger or a greater number of cylinders and the relative percentage cost penalty of a 97 kW(130 bhp) diesel engine compared with a gasoline engine of the same output is likely to be smaller than from the two comparable engines of lower output.

Other factors which contribute towards the higher cost of the diesel include more complex and accurate machining requirements around the combustion chamber and the need for sophisticated materials in pre-chambers.

In these high compression ratio engines, the total combustion volume is very small and tolerances controlling piston/head bumping height must be minimised in order to remain within the band of correct chamber proportions for optimum performance. This means that all components which have some control over this must be manufactured to more exacting requirements than their gasoline equivalents (see

Fig. 4-16), and a slight additional cost penalty is thus incurred.

Although the diesel has been shown to be considerably more expensive than the gasoline in terms of first cost, it must not be forgotten that in a typical passenger car the cost of the gasoline engine accounts for generally less than 10% of the total retail price of the vehicle. This proportion would increase with a diesel engine to perhaps 15 - 20%, still only a modest proportion and one which might easily be justified in a fuel economy conscious climate.

Maintenance

User experience indicates that major maintenance intervals for light duty diesels may be three times as long as for gasoline engines (15). The use of pintle type nozzles in IDI engines gives good reliability and long service, 290,000 km (180,000 miles) is being quoted with routine cleaning (100). Other sources quote 160,000 - 240,000 km (100,000 - 150,000 miles) without removing injectors, even for cleaning (112) and vehicle operation of 320,000 km (200,000 miles) without attention was experienced by one taxi fleet operator.

Routine maintenance costs are difficult to define. Some operators find the cost less for diesel than for gasoline engines due to the lack of spark plugs, HT components, etc. (479), but others suggest that routine servicing is slightly more costly due to the higher frequency at which filter elements should be changed. Ref. (15) has a table showing service costs of $ 98 for gasoline and $ 112 for diesel. In general, the opinion of operators suggests that major engine maintenance is much less frequent for diesel than gasoline engines but is probably slightly more expensive per service. The net result however is reduced maintenance cost and less time off the road due to breakdowns and servicing. Extra cost of diesel vehicle recovered in first 40,000 km (25,000 miles) was quoted by one operator (479).

From the literature survey it is apparent that the routine maintenance costs of the diesel are very similar to those of the gasoline engine and that if anything the shorter diesel lubricant life may make the diesel's servicing marginally more expensive.

Service life of pintle nozzles of 160,000 km plus (100,000 miles plus) with the rest of the fuel injection equipment having similar maintenance

requirements, will virtually eliminate major overhauls in a passenger car with an average life of 160,000 km (100,000 miles).

Starting

While the diesel engine is totally immune to the problems of damp ignition systems which affect gasoline engines, there are difficulties in obtaining a quick start under cold ambient conditions.

The limiting temperatures for a start without aids depend on the combustion chamber type as follows:-

Pre-chambers - It is necessary to use a starting aid (heater plug) to obtain a quick and smoke-free start from below 10 - 15°C (50 - 59°F) with this chamber.

Swirl chambers - Some form of starting aid needed for the first start of the day when ambient temperature is below 15°C (59°F), subsequent starts are satisfactory if Pintaux nozzles are used.

DI - Easy cold starting without aid down to -10° to -15°C (14° - 5°F) is normal.

'M' System - The cold starting of the 'M' system is inferior to that of the DI because of the heat losses arising from the high air swirl employed and a starting aid is required (34).

The cranking speed of the engine is important for effective starting and a minimum of 2 rev/s(120 rpm) should be maintained. It is important that the starter should not throw out of engagement when the engine first fires (277).

The cranking speed can be increased under low temperature conditions by changing to low viscosity lubricating oil. By changing from 10 to 5 SAE lubricating oil an increase of 1/3 in cranking speed can be obtained.

A sufficiently high compression ratio is vital for good starting and indeed the ratio is normally chosen from consideration of good starting and low noise and is set at a higher value than would be desirable from

considerations of best fuel economy.

A number of aids to assist starting are available in addition to the provision of excess fuel which is universally employed.

1. Heaters installed in water jacket and/or oil sump. These are usually household current operated and provided the engine is isolated from the atmosphere so that a general area of warmth is generated around the engine, they are effective.

2. Heater plugs installed in the combustion chamber. The term heater is a misnomer as they really ignite the fuel rather than heat the chamber. There are three types of heater plug: heavy gauge, shielded, and thin wire. Tests showed that the ignition delay period was least with the heavy gauge and longest with the thin wire (54).

   For satisfactory starting the element should reach at least 1000°C (1832°F). (423)

   With swirl chamber engines the gain in starting with a heater plug can be as much as 30°C (54°F) and the lowest limit for starting with heater plugs is around -25°C (-13°F). (423)

   A wait of 15 - 30 seconds is necessary for the heater plug to warm up. (112)

3. Heater installed in the inlet manifold.
   Manifold heating can be achieved by an electric heater or by combustion of fuel within the manifold. The probable gain in starting with an electric heater for a DI is of the order of 10°C(18°F). (423)

   Combustion heaters such as the CAV Thermostart or Kygas burn fuel in the manifold and give gains in the order of 10 - 15°C (18 - 25°F) on both DI and IDI. (423)

   With combustion heaters it is important to control the fuel quantity or excessive flows will starve engine

combustion of oxygen. (423)

In IDI engines manifold heaters are less effective than heater plugs in the cylinder but may be easier and cheaper to install and can operate with smaller delay time. (277)

4. Aids based on fuels having low ignition temperatures. Starting fluids are usually based on ether with addition of lubricating oil and are very effective and can start DI or IDI to -40°C. (423)

5. Devices applied to injection equipment. Simple retard of injection timing for starting and the use of Pintaux nozzles is employed with swirl chamber engines which can improve starting by 10°C (18°F). (423)

6. Other Methods. Adding a small quantity of oil or gas oil to the inlet manifold directly behind the inlet valve assists starting, by improving the seal of the piston rings and increasing compression ratio. (423)

   Closing the inlet valve earlier gives an increase in effective compression ratio but will give a penalty in engine performance at full speed.

   While Cetane number is an important fuel quality for starting, at lower temperatures where a starting aid of some form is necessary, the Cetane number is less important. (564)

   White/blue smoke on starting is reduced by using higher Cetane fuel (38, 19)

   White/blue smoke on starting is reduced by using more volatile fuel. (38)

As mentioned earlier, some diesel fuels give trouble in vehicles in cold weather due to clogging of fuel filters by wax crystals. Improved design of the fuel system can help as can the use of flow improvers in the fuel or kerosene dilution of the fuel.

Starting of Passenger Cars in the USA

For the first cold start of the day, no insurmountable problems are foreseen for the diesel powered passenger car provided the correct starting procedure is followed. If heater plugs are allowed to achieve working temperatures of 1000°C (1832°F)(entailing a delay of 20 - 30 seconds with current devices) a satisfactory start in ambient conditions down to -20 to -25°C (-4° to -13°F) can be achieved; the additional use of simple ether-based aids extends this range down to -40°C. Care must be taken when using aspirated special fuels with a very high ignition quality (e.g. ether) as excessive amounts can cause damage due to extremely high cylinder pressures and it is preferred that if this form of aid is to be used regularly it should be administered automatically.

White/blue smoke can be a problem for some engines immediately after a cold start, particularly at light load when fuel atomisation and mixing is often poor. Any fuel introduced into the chamber late in the combustion process is thus a potential cause of blue smoke, and it is mainly in the field of development of fuel injection equipment and reduction of production tolerances on injection timing settings that improvements can be made. On the combustion chamber side, any feature which decreases warm up time will minimise the time period during which blue smoke is likely to occur, and both Daimler-Benz with their pre-chamber and Ricardo with the Comet Mk.V incorporate insulated chamber members in order to reduce this problem of warm up time. Other means of cleaning up blue smoke include increasing the Cetane number of the fuel or increasing the compression ratio of the engine (already raised for starting considerations far above the optimum performance requirement), or increasing the exhaust back pressure, thus raising the mean load factor and in-cylinder temperatures.

One subjectively annoying aspect of starting small high speed diesel engines is the delay while waiting for the heater plugs to warm up. Prototype plugs with virtually instant warm up times have been tested but these have always encountered durability problems and it is unlikely that an instant warm up plug could be developed to a production stage within the next two or three years. A fast warm up plug (say 10 seconds) would be extremely desirable, or alternatively current production plugs could be made more attractive if a programmed start were adopted in which the heater plugs were activated manually or automatically via some remote sensor/switch before the driver gets into the car so that the subjective delay time is minimised.

Even in warm ambient conditions, e.g. 15°C (59°F), it is desirable to use some degree of pre-heat of the heater plugs in order to avoid excessive cranking times (with fuel being injected and passing straight through the engine). Thus some form of programmer which determines the minimum required pre-heat time to ensure an immediate start would be advantageous. In order to predict required pre-heat times both ambient and cylinder head temperatures would need monitoring.

Thus the starting problem of the light duty diesel falls into the following categories:-

1. Subjective annoyance during delay while heater plugs warm up. This can be a problem even in mild ambient conditions. A possible cure is a simple programmed start device or the development of a fast warm up heater plug. 'Instant' warm up heater plugs would eliminate this problem altogether but experience has shown durability and allied problems.

2. Excessive cranking with a warm engine due to the driver overriding the heater plugs leading to unburnt fuel being passed through the engine. This problem could be eliminated by incorporating an automatic programming system which senses cylinder head and possibly ambient temperatures and automatically selects optimum preheat time before the starter can be engaged. The ultimate solution is a completely automated start.

3. White/blue smoke - can be minimised by careful development of fuel injection equipment for low speed operation. If this is not successful, other techniques such as raising the exhaust back pressure thus increasing engine working load are known to be effective, but in this case it is accompanied by a fuel economy penalty.

4. Starting during extreme winter conditions - in this respect the starting of the diesel is inferior to that of the gasoline engine in that a specific starting sequence must be followed to ensure a start - as in (2) automatic programming devices may help to reduce the subjective annoyance but the delay is still there.

Hot Driveability

With the same torque curve for the diesel as the gasoline engine, driveability will be similar to that of the gasoline engine. The diesel engine normally has an all speed governor, the throttle control being an engine speed control. If desirable however it would be possible to fit a load control together with a governor giving idling and over-speed control.

Current flywheels are small enough to give easy and rapid gear changes, particularly on six cylinder engines. Transmission system requirements are similar to those of the gasoline engine and no special provisions need be made.

Diesel engined vehicles in production, even with four cylinder engines, can be driven down to about 25 km/h(15 mph) in top gear. Engine flexibility is very good and hot driveability should not therefore present any problems. (Fig. 16, Ref. Nos. 489, 648).

Driveability is unaffected by emission control measures, such as retard of injection timing. (112)

Cold Driveability

Once the diesel engine is running it will deliver power unfailingly without the danger of stalling or hesitation which is a common fault with gasoline cars if the accelerator is depressed suddenly when the engine is cold. Driveability is also unaffected by emission control measures such as retard of injection timing. (112)

Torque Rise

In the gasoline engine the torque curve shape reflects primarily the breathing capacity of the engine modified somewhat over the speed range by the change of mechanical and indicated thermal efficiencies. The diesel engine torque curve is influenced by the same factors but can be radically altered by a change in injection equipment specification. Additionally, changes in combustion efficiencies will be greater in the diesel. At low speeds the maximum torque must be reduced, in part because of the higher proportionate heat losses and in part because of

mis-matching of the air and fuel movements resulting in an early onset of exhaust smoke. At high speeds the torque will hold up within the limits of the breathing of the engine.

The ideal torque curve shape depends on the engine application. By changing valve timings, injection timings or combustion chamber characteristics the torque curve shape can be varied. (287) (Fig. 4-17)

A torque curve back up of rather more than 10% would seem reasonable for automotive diesel engines whether normally aspirated or turbocharged. The speed range over which the torque back up will be achieved will be less with the turbocharged than with the normally aspirated engine, in general 65% and 55% of maximum speed, respectively. (391).

With Comprex supercharging the rated output can be increased by 40% and at half speed, the torque can be increased to 70% above the normally aspirated values. By suitable matching, the peak torque can be set at whatever speed is required between 50 and 75% of full speed. (176)(Fig. 4-18).

A naturally aspirated swirl chamber engine producing 96 kW (128 bhp) from 4.8 litre (292 CID) at 66.7 rev/s (4000 rpm) 6 Bar (88 lb/in^2 bmep) would have, say, 10 - 15% torque back up down to a speed of 33.3 rev/s (2000 rpm).

The torque to be transmitted will depend on the engine type chosen. If a high speed gasoline engine is replaced by a low speed diesel engine, the increased torques may require a somewhat heavier transmission but if the two engines run at similar speeds the same transmission may be employed.

Durability

It is difficult to put definitive values on the durability of the high speed diesel engine. Most user experience is concerned with commercial vehicle operation; trucks and buses, etc., but operators of passenger car vehicles which have been surveyed indicate that their experience may be similar to that of the larger vehicle operators.

The durability of the diesel engine is tied to wear rates, since excessive

wear is the normal reason for component failure. This in turn may be attributed to the duty for which the particular vehicle is subjected and to the sulphur content of the fuel. Research has shown that diesel wear on start up is much less than for the gasoline engine but, due to higher loadings, steady state wear may be higher (456). Overall durability, however, should be greater than for the gasoline engine if only because of the higher quality materials and more rugged construction required for the diesel engine (15). Wear rates of 0.1mm/1000 hours at top ring level and 0.0016 mm/1000 km for liner wear are quoted (100) if the liner temperature is kept above 100°C (212°F). The effect of fuel sulphur content was shown to produce three times the wear rate when the sulphur content is increased from .06% (desulphurised) to 1.4% (564). The sulphur content was also shown to have an effect on carbon deposits which in turn affect durability. Carbon deposits were also shown to be affected by fuel Cetane number; reducing the number from 55 to 35 doubled the amount of carbon (564).

Experience with taxis suggests 320,000 km (200,000 miles) on one vehicle without attention. Comparison of the durability of fuel injection equipment with spark ignition equipment shows the diesel equipment to require less maintenance and to have a greater life (15). The life of injection equipment is variable but is quoted as 288,000 km (180,000 miles) (100), and 176,000 km (110,000 miles) (639). In this period routine cleaning of the nozzles may be required but some users do not consider this necessary, particularly for the self cleaning pintle type of nozzle used in indirect injection engines.

The factor which determines the time at which the diesel engine should undergo a major overhaul is cylinder bore wear. When run on a low sulphur fuel (i.e. less than 0.4%), current European engines achieve approximately 160,000 km (100,000 miles) between overhauls and during this time it may be necessary to inspect and clean the fuel injectors once or perhaps twice.

Thus the durability of the complete engine package is known to be at least as good as that of the gasoline equivalent. It is likely in fact that the diesel engine will have a durability that considerably exceeds that of the bodywork of the vehicle.

Coolant Heat Losses

Heat transfer from the combustion gases is dependent on the temperature, pressure and velocity of the gases, and in the diesel engine, on radiation from carbon particles in the flame. At high loads, radiation plays an important part, and while the mean gas temperatures of the diesel are somewhat below those of the gasoline engine, the pressure and gas velocities will be greater and as a result the heat losses from an indirect injection diesel at high load are greater than from a gasoline engine of the same power output.

At part load, radiation plays a much smaller part and the mean gas temperatures in the diesel fall rapidly and as a result, although the pressures and gas velocities are not reduced appreciably, the diesel engine has a lower heat rejection at low loads than does the gasoline engine.

The differences are clearly brought out in Figure 4-19 from which it can be seen that the heat loss to the coolant at full load can be 25% higher for the diesel engine. In view of this higher heat loss, it is normally necessary to fit a larger radiator than for the equivalent gasoline engine where the size is often set by the need to prevent boiling of the coolant under idling conditions with a high ambient temperature. A radiator size of some 15% larger is necessary. (150).

The lower heat loss to the coolant from the diesel at light loads could be a minor disadvantage in winter conditions in that it may marginally affect cab warm up time with a cold engine. Under light load conditions it may be desirable to fit shutters to blank off the radiator to ensure a sufficiently high coolant temperature to give effective defrosting of the windshield and to provide cab comfort. (31)

It is of course possible to use air cooling for the engine. This overcomes the problem of leakage and coolant freezing. (257)

There are disadvantages with air cooling in that:-

1. With higher temperatures and the difficulty of getting effective cooling of hot spots, the air cooled engine is generally rated at a lower power.

2. The hotter cylinder walls result in a lower volumetric efficiency.

3. With no water jackets to absorb sound, the air cooled engine is noisier.

4. It is not so easy to provide vehicle heating.

The first of these is the most difficult, and the problems are accentuated by the very high local heat flows which occur in portions of the cylinder heads of indirect injection engines. There are in fact no air cooled diesel engines employed in light duty service today.

Vibration and Torque Recoil

On approaching idling conditions from a higher speed on a diesel engine, the exciting torque and the transmission of the engine mounting both increase so that a rapid increase in the magnitude of the vibratory forces applied to the vehicle frame is to be expected. With the gasoline engine the exciting force is substantially smaller and is further reduced by throttling of the air intake (367).

After installing diesel instead of gasoline engines in ½, 1 and 5 tonne vehicles, driver reaction was that diesel vehicles were noisier and suffered more from vibration (31).

If one makes the engine mounting soft enough to accommodate the displacement involved at idling speeds, it is almost impossible to avoid the engine passing through the natural frequency of the mounting on starting up or stopping (15).

For these reasons very low natural frequencies of the engine on its rubber mounting are chosen; i.e. below the lowest operational speeds of the engine (367).

The use of automatic transmissions in vehicles has a beneficial effect on the problem of torque recoil vibration by virtue of the fluid coupling involved (15).

In general, very close attention to detail in the development of the engine/body package is necessary to ensure an acceptably 'smooth' vehicle, especially at low engine speeds and at idle, but Ricardo believe that it is possible although it is never likely to be as good as with a throttled gasoline engine.

Manufacture

In overall design the automotive diesel engine is conventional and could be made on the same production line as a gasoline engine. Many gasoline engine parts could in fact be incorporated. The special feature which the diesel engine demands above all others is the reduction to a minimum of the dead space outside the combustion chamber. Clearance between the piston and cylinder head must therefore be kept to a minimum and it is chiefly for this reason that a simple shape, i.e. a flat cylinder head with vertical valves, is maintained. The necessity for close tolerances on a large number of parts in order to hold the piston to head clearance down to a reasonable value will add to the cost of the engine as compared with the gasoline engine. Other features of the diesel, apart from the fuel injection pump drive, which differ from gasoline engine practice result from the higher cylinder pressures in the diesel cycle. Thus there is a main bearing between each cylinder, the piston and connecting rod are extremely sturdy and the cylinder head is held on by a thicket of studs (626).

The compression ratio of a typical 2¼ litre, 4 cylinder Comet engine can vary considerably due to production dimensional tolerances. By far the greatest contribution to the variation arises from the dimensions controlling the piston head clearances (122).

With regard to ancillaries, all these are very similar to those currently used on American gasoline engines (although some, such as the starter motor and alternator, may need to be slightly larger) apart from the fuel injection equipment and a small air pump (vacuum or positive pressure). The latter is needed for the power braking system as the diesel, which does not throttle its intake air, does not have a convenient, usable low grade pressure system as does the gasoline engine.

Fuel injection equipment, although manufactured to very close tolerances, is designed specifically for high volume production and is currently manufactured in very large quantities on current technology equipment.

Lubrication

The internal combustion engine imposes a severe duty on its lubricant. The lubricant must perform several independent functions including the control of wear and corrosion, serve as a piston seal and coolant as

well as flush away carbonaceous, partly burnt fuel residues from critical areas. It must also function satisfactorily over a wide temperature range with both temperature extremes introducing their own individual problems.

Diesel engine lubricants are formulated to control corrosive wear of piston rings, liners and bearings and to prevent the fouling of various engine parts by the build up of deposits (570).

All modern lubricants contain additives to improve their performance. The following properties are normally bestowed on the lubricant by the addition of additives:-

1. Detergent/dispersant qualities so that insolubles such as soot or oxidation products remain in suspension in the oil and do not deposit on engine surfaces. This is much more important in a diesel engine than in a gasoline engine.

2. Anti-oxidant qualities to discourage lacquer formation in piston ring grooves and consequent ring sticking and to reduce the rate of viscosity increase caused by oxidation products.

3. Anti-corrosive qualities to prevent the corrosion of bearing liner materials. Also adequate alkalinity to neutralise any sulphuric acid products that condense on the liner and hence to suppress corrosive wear of liner and rings arising from the higher sulphur content of diesel fuels.

4. Extreme pressure qualities to reduce valve train scuffing, particularly tappets and cams.

5. Viscosity index improvements to give the oil multi-grade characteristics.

6. Pour point depressants to prevent oil thickening at low temperatures.

7. Anti-foaming and anti-rust properties.

It appears that prechamber engines are more severe from the additive depletion aspect in their demands on heavy duty lubricating oil than are their direct injection counterparts. (570)

Oil change periods are normally dictated by additive depletion although other factors can influence the change period, e.g. contamination of lubricant with fuel, coolant or abrasives (570).

A reasonable oil consumption for an automotive diesel engine is 0.5% of its gross fuel consumption.

Analysis of oil samples after short engine runs both with and without exhaust gas recirculation showed that the oil used during the test with exhaust gas recirculation had a significantly higher insolubles content than the oil from the non-EGR test, suggesting that some engine wear increase may occur as a result of EGR and that more frequent oil changes will be required with EGR.

CONCLUSIONS

Smoke

Black Smoke - This should not be an aesthetic problem if the engine complies with the Federal Smoke Regulations for heavy duty vehicles. (This should be obtainable by attention to local mixing and the overall air:fuel ratio at rated conditions. Ratings can be controlled to take account of altitude effects).

The high power:weight ratio of the American car should mean that visible smoke conditions will only be obtained for extremely short periods during hard accelerations.

Turbocharged engines may have a low speed transient problem but the 'Comprex' pressure exchanger might be a solution to this.

Blue/White Smoke - This can be unpleasant from the sidewalk particularly as it is formed under idle conditions, but the problem can be minimised by careful attention to combustion chamber design and fuel injection characteristics.

Odour

The small high speed diesel can have an odour problem, particularly at light load conditions if misfire is approached. The problem can be minimised by the addition of a light load advance mechanism.

Odour at full load can be minimised by combustion chamber development. The proposed reductions in smoke levels should alleviate this problem.

The identification of several odorous components has been achieved but quantitative assessment has yet to be perfected. The A.D. Little Odormeter may advance technology in this area by a significant step.

Gaseous Emissions

In general, turbocharging increases NOx further by increasing the charge temperature but it allows further retard for the same smoke limit.

Exhaust gas recirculation is effective in reducing NOx levels(particularly over the CVS-CH cycle) but durability has yet to be proved and it does tend to increase smoke emissions.

Although water injection has the benefit of reducing NOx without significantly affecting engine performance, the logistics of the installation and the problems of engine durability make this measure unattractive.

Timing retard is undoubtedly the most effective single parameter for the reduction of NOx and the fact that the smoke limited performance of the IDI engine tends to deteriorate less with retard than the DI gives it a major advantage in this field.

The limited data available indicates that emission levels from 2-stroke engines should be of the same order as from 4-stroke engines of similar performance.

Heavy duty experience leads to the conclusion that the use of a conventional direct injection chamber will increase both NOx and CO levels while HC levels might rise rapidly with retarded timings. It seems almost certain that a high speed (67 rev/s) (4000 rpm) conventional, naturally aspirated direct injection engine would not achieve the primary emission levels due to its low smoke limited performance at retarded timings.

For a naturally aspirated 4-stroke indirect injection engine it can be predicted that 3.4 g/mile CO can be achieved; 0.41 g/mile HC could be attained on prototype vehicles although this figure may not be held in production ; and 1.5 g/mile NOx could just be obtained from a prototype current generation engine although some exhaust gas recirculation may be necessary to allow a margin for production compliance.

Although 0.4 g/mile NOx has been achieved with a highly modified prototype engine in a European type vehicle, it is extremely unlikely that this figure would be achieved with a heavier vehicle and with a higher power to weight ratio.

Any diesel powered vehicle would have less difficulty in achieving the target objectives if both weight and power to weight ratio were reduced. A lighter, lower powered vehicle would also have improved fuel economy.

Particulates

The early suggested Californian requirement would present a major problem for all engines with a heterogeneous combustion system and this is undoubtedly a problem area for the diesel engine. However, the true effect of particulates on health is unknown at the moment and the problem could be solved by the addition of filter systems although this move would carry a high cost penalty.

It is considered that work should be initiated into the distribution of particulates from different types of engines and their true health hazard determined before any legislation is finalised. An understanding of their formation within the engine might also be a useful tool for their control and thus a fundamental investigation using experimental and analytical techniques should also be started.

Noise

The drive-by noise levels of diesel powered vehicles are slightly higher than those of gasoline powered vehicles but there is no reason why light duty vehicles should not meet proposed noise legislation.

The idle noise is annoying to the by-stander as well as the driver with present European vehicles.

There is no reason why diesel powered light duty vehicles should be unacceptable to either the driver or by-stander if sufficient attention is paid to details of the engine and vehicle construction.

Volume

For the same power output the diesel engine is likely to be greater in volume than a highly rated gasoline engine, but the increase in volume is unlikely to pose any major problems.

The main variables are listed below :-

Engine type - 4 stroke
2 stroke (valve in head, loop scavenged-opposed piston)
Engine compression ratio
Boost pressure
Cylinder pressure limits
Air fuel ratio
Valve timing
Turbine efficiency
Compressor efficiency
Use of charge cooler - charge cooler efficiency
Engine /turbo components drive arrangement
Thermal loading limitations
Bore/stroke ratio

Although there is a fairly extensive literature study of the subject, the little practical experience that exists is concerned with large engines for which this configuration is most suited. The performance predictions are also concerned with large engines and are mostly confined to maximum output conditions without consideration for part load operation.

In order to arrive at fairly broad estimates for the performance of a small engine, the available information has been used and modified where possible to take account of the scaling down of the components.

Engine Configuration

The simplest form of compound engine is that in which the output is taken from the diesel engine with the turbo-compressor unit geared to the crankshaft. The gearing has to cope only with the difference in power between the compressor and the turbine, and there is no requirement for power equilibrium between these components such as exist in normal turbocharging.

With a gas generator system all the power output is taken from the turbine through reduction gearing. For the relatively low power requirements of the engine under study the small turbine would have a very high rotational speed. Although this arrangement has the theoretical advantage of a high-low speed torque compared with the compound engine, it is not considered to be feasible for the present application in view of these high rotational speeds and the unknown performance of small turbines at high expansion ratios.

Engine Type

From the available data a 2-stroke engine is seen to offer the best thermodynamic performance and power/weight ratio with an opposed piston type being superior to the valve in head form. It also permits greater control over the division of power between the diesel engine and the turbine compared with a 4-stroke engine. However, although the 2-stroke engine is basically simpler it is considered that the 4-stroke might be preferred since it has much lower thermal stresses and piston heat flow and has greater volume of experience behind its development.

Estimated Performance

The values tabulated below have been derived from data predicted for large engines with the following assumptions :-

Boost ratio 4:1 - Inlet pressure 4.12 Bar (60 lb/in^2 abs)
Charge cooler effectiveness 80%
Charge cooling water temperature 85°C
Compressor efficiency 74%
Turbine efficiency 82%
Cylinder pressure limit 207 Bar (3000 lb/in^2)

The final column shows the engine swept volume for 96 kW (128 bhp) at an engine speed of 50 rev/s.

Weight

When compared with a highly rated gasoline engine of 97 kW (130 bhp) a diesel engine of the same power output may be as much as 136 kg (300 lb) heavier, but the weight penalty may be as little as 68 kg (150 lb) if a more normal low rated gasoline engine is chosen for comparison.

Fuel Economy

The diesel engine is the most efficient current and practical power plant for light duty use.

Its fuel economy advantage over the gasoline engine will increase as the load is reduced and may be as much as 50% (twice the miles per gallon) in city use.

Fuel

As fuel costs increase the high economy diesel engine becomes more and more attractive.

Automotive diesel fuel production could be increased by up to twelve times the current levels by 1980.

If it became necessary to introduce wider cut fuels noise could be increased and cold starting worsened, emission levels could also increase.

First Cost

The first cost of the diesel engine will be significantly higher than that of the gasoline engine for the same power output and emission levels.

Such evidence as is available indicates that the diesel engine in America will cost between 1.5 and 2 times as much as the gasoline engine. For a 97 kW (130 bhp) engine this means some $ 300 against $ 200 production cost and about half of this extra cost is due to the extra cost of fuel injection equipment.

Maintenance

Minor maintenance requirements of the diesel engine (oil change, filter elements, etc.) are equivalent to the gasoline engine although the cost of these items may be slightly higher.

The periods between major overhauls for the diesel are greater so that over the life of the vehicle overall maintenance costs will be less than for a gasoline engine.

Starting

Starting is inferior to the gasoline engine particularly in mild ambient conditions although a programmed start would reduce the annoyance of the 30 second (maximum) delay for heater plugs.

The light duty diesel engine will start down to -25°C (-13°F) with heater plugs, but without external aids, and down to -40°C (-40°F) with simple external aids. Below this temperature more complex external aids are required.

Hot Driveability

For engines of equivalent power the low speed torque will be greater with the diesel than with the gasoline engine.

Although the operational speed range of the diesel is less than that of the gasoline engine its low speed smoothness is frequently better.

Cold Driveability

The cold driveability of the diesel engine is as good as its hot driveability and is considerably superior to that of the carburetted gasoline engine.

Torque Rise

The gasoline and diesel engines will have similar torque characteristics. If the diesel engine runs at an appreciably slower speed than the gasoline however, the high torques may require a slightly heavier transmission.

Durability

The durability of the diesel engine will be greater than that of its gasoline counterpart. The diesel may in fact be too durable and outlive the vehicle, but it is difficult to reduce engine life without seriously impairing durability and reliability.

The durability of the diesel fuel injection system is greater than that of the gasoline engine's ignition and carburation system.

Coolant Heat Loss

The reduced heat loss at idle and low load will reduce the problems of 'traffic-jam-boil-over' but may make winter morning de-icing and warm-up slightly more difficult.

The increased heat loss to coolant at full load may dictate the use of a larger radiator, but this will possibly only be required for vehicles towing trailers.

Vibration and Torque Recoil

The torque recoil from the unthrottled, high compression ratio diesel is undoubtedly greater than from the gasoline engine, particularly at idle. This tends to give the impression of harshness which disappears once the vehicle is in motion.

The problem can be minimised by attention to the engine mountings.

Manufacture

The diesel engine is sufficiently similar to the gasoline engine to allow it to be made on the same production line if necessary, although greater control of tolerances is required.

Ancillaries are all similar to those of the gasoline engine and in many cases are identical.

The production techniques for the high volume production of fuel injection equipment have already been developed in Europe although there may be some scope for cost reductions with even greater production quantities.

Lubrication

The diesel engine demands lubricants with higher dispersant and anti-corrosive properties than the gasoline engine. With present day oils this implies that oil changes might be slightly more frequent.

Areas likely to Benefit from further Work

1. Emissions

A fundamental attraction of the diesel engine is that its emission characteristics can avoid the use of catalysts. A careful study of the origins of the controlling parameters in the formation of unburnt hydrocarbons in light duty diesels would yield much valuable information and perhaps extend the use of non-catalyst controlled power plants.

2. Particulates

Current ignorance on the spectrum of particulates from a given engine, the relative dangers of particulates of various sizes and compositions, and the effects of blanket legislation would indicate that work should be initiated into these unknown areas before any legislation is passed.

3. Starting

Further work on 'instant' glow plugs and programmed starts may increase the acceptability of the diesel engine.

4. Fuel Injection Equipment

About 50% of the cost differential between diesel and gasoline engines is due to fuel injection equipment while both emissions and noise might benefit from more versatile injection systems. Because of this research into cheaper and more versatile fuel injection equipment should be considered.

EPA PROJECT RFP WA 73-R176

BAR CHART OF INSTITUTION AND CONFERENCE PAPERS SURVEYED

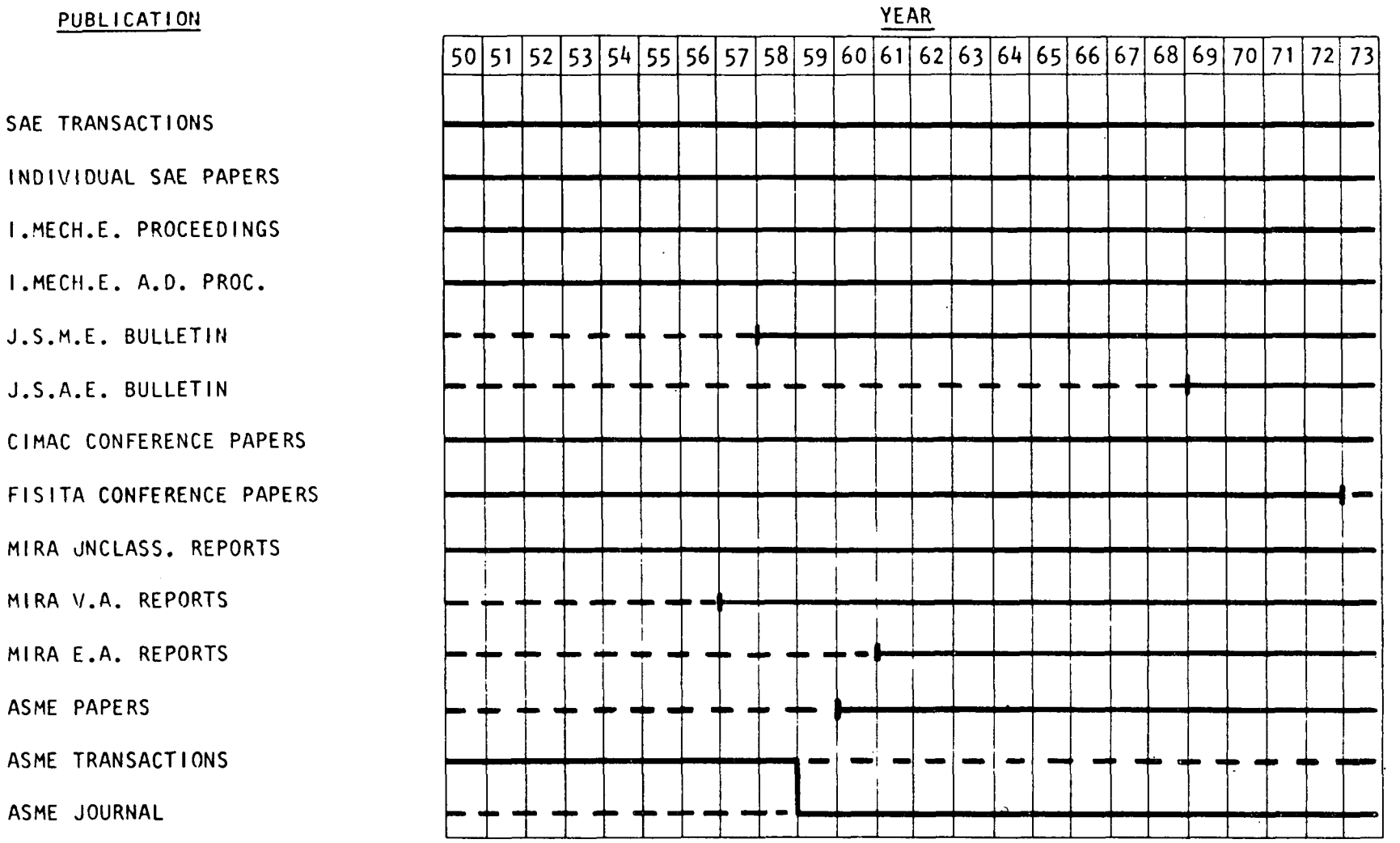

FIG. 4-1

BAR CHART OF JOURNALS SURVEYED

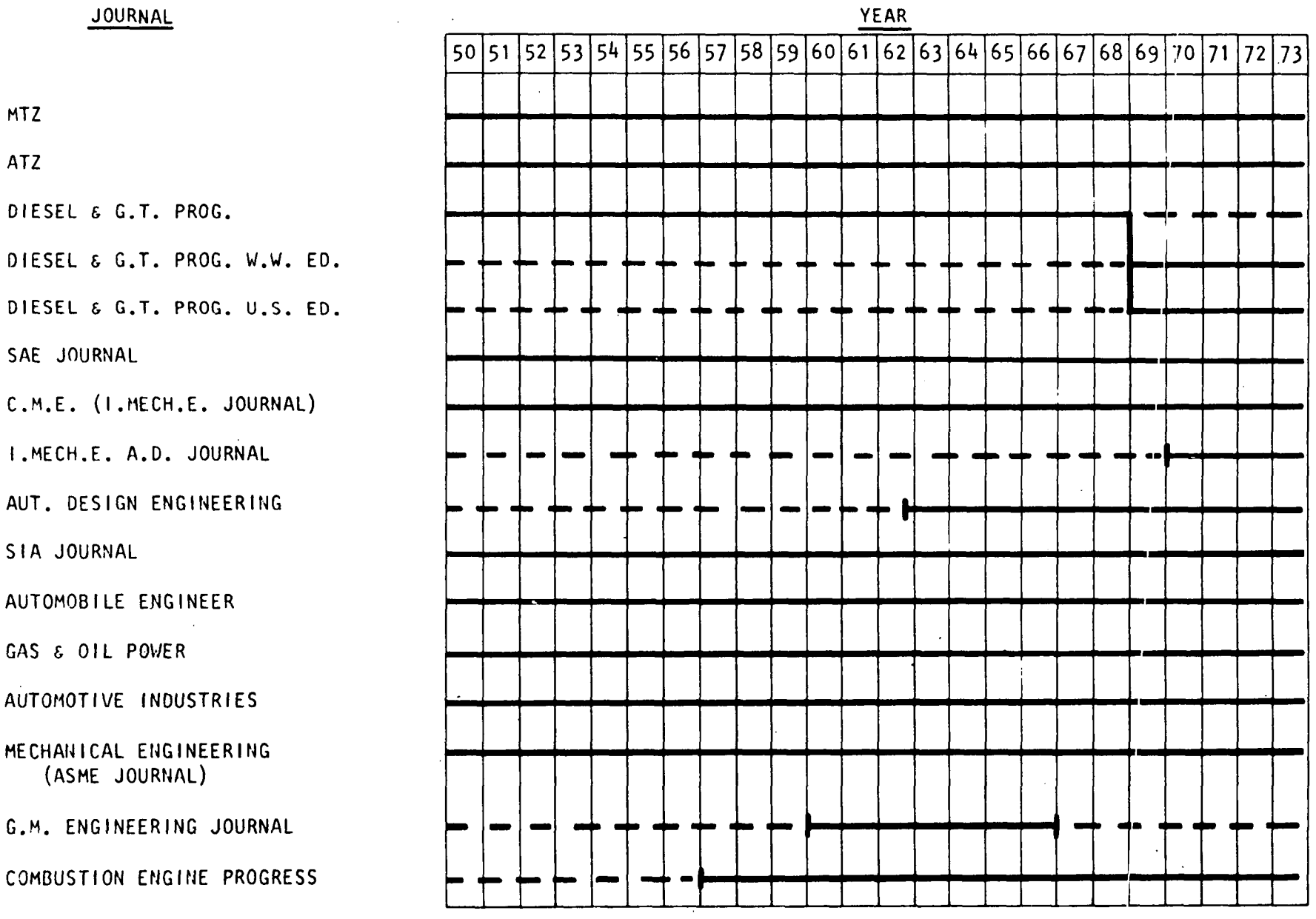

FIG. 4-2

FIGURE 4-3

A STUDY OF THE DIESEL AS A LIGHT DUTY POWER PLANT

LIST OF EUROPEAN DIESEL VEHICLE OPERATORS CONTACTED TO OBTAIN USER EXPERIENCE DATA

OPEL, RUSSELSHEIM, W. GERMANY.

PEUGEOT, PARIS, FRANCE.

DEUTZ, PORZ, W. GERMANY.

B.L.M.C., LONGBRIDGE, ENGLAND.

B.P., LONDON, ENGLAND.

C.A.V., LONDON, ENGLAND.

LONDON GENERAL CAB CO., LONDON, ENGLAND.

VERBAND FUER DAS PERSONENWERKEHRSGEWERKE, HAMBURG, W. GERMANY.

SLOTA TAXIS, PARIS, FRANCE.

AUSTIN HIRE & TAXI SERVICE LTD., WORTHING, ENGLAND.

FIG. No. 4-4
Drg. No. D 26068
Date 28-7-74

2 LITRE D.I. CONVERSION

PERFORMANCE COMPARISON - D.I. AND COMET V BUILDS

EXHAUST SMOKE MEASUREMENTS AT OPTIMUM CONDITIONS.

FIXED STATIC PUMP TIMING — BARO: D.I. 764 mm Hg.

OPT. SWIRL 55 rev/s FOR D.I. — COMET 770 mm Hg.

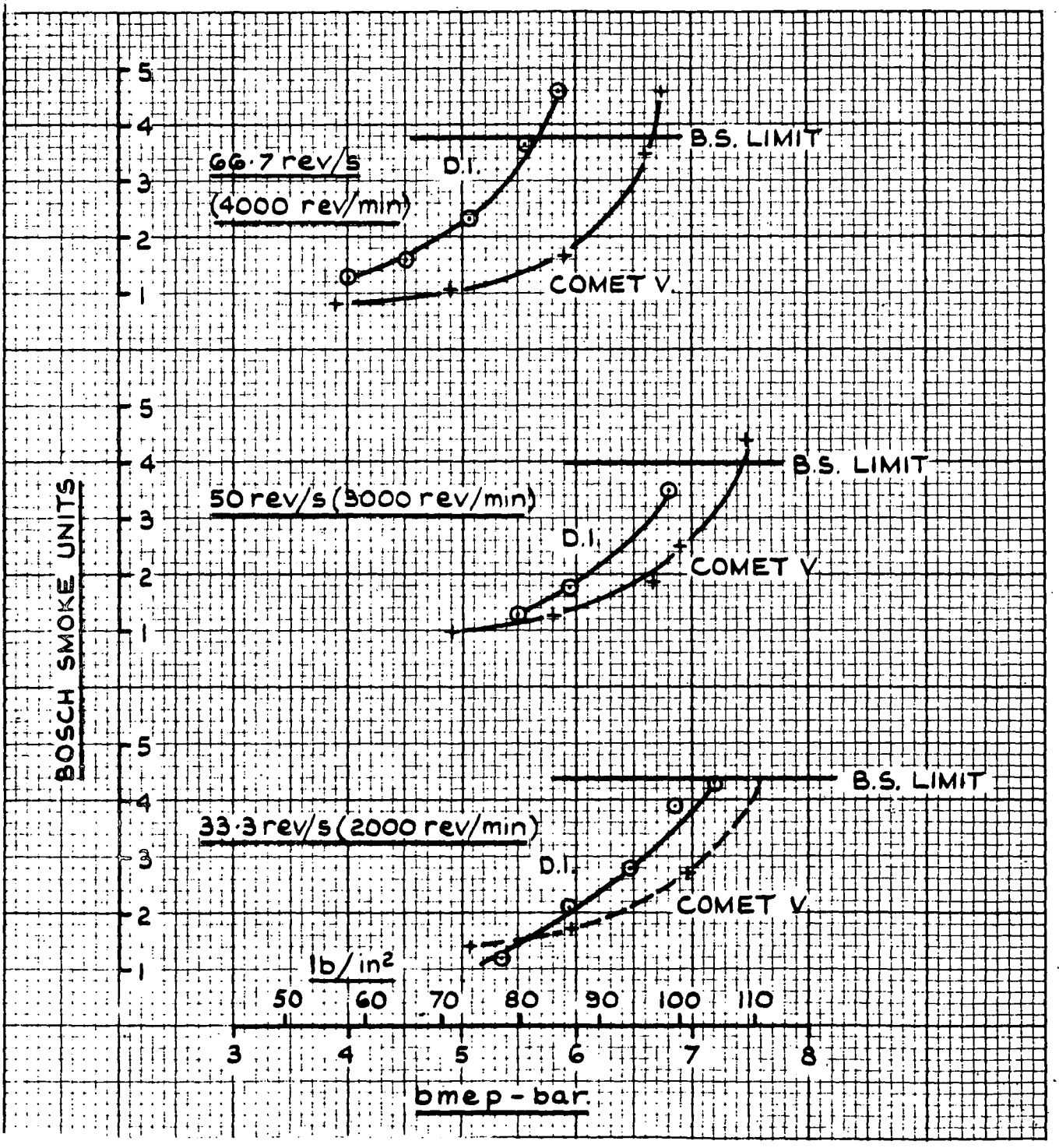

FIG. No. 4-5
DRG. No. D 26203
DATE:- JULY 74

COMPARISON OF FULL LOAD CHARACTERISTICS FOR THREE COMBUSTION CHAMBERS ON 2-LITRE 4-CYLINDER ENGINE.

(FROM PAPER BY DR. EISELE - DAIMLER BENZ)

D.I. = DIRECT INJECTION
P.C. = DAIMLER BENZ PRECHAMBER
S.C. = SWIRL CHAMBER COMET V

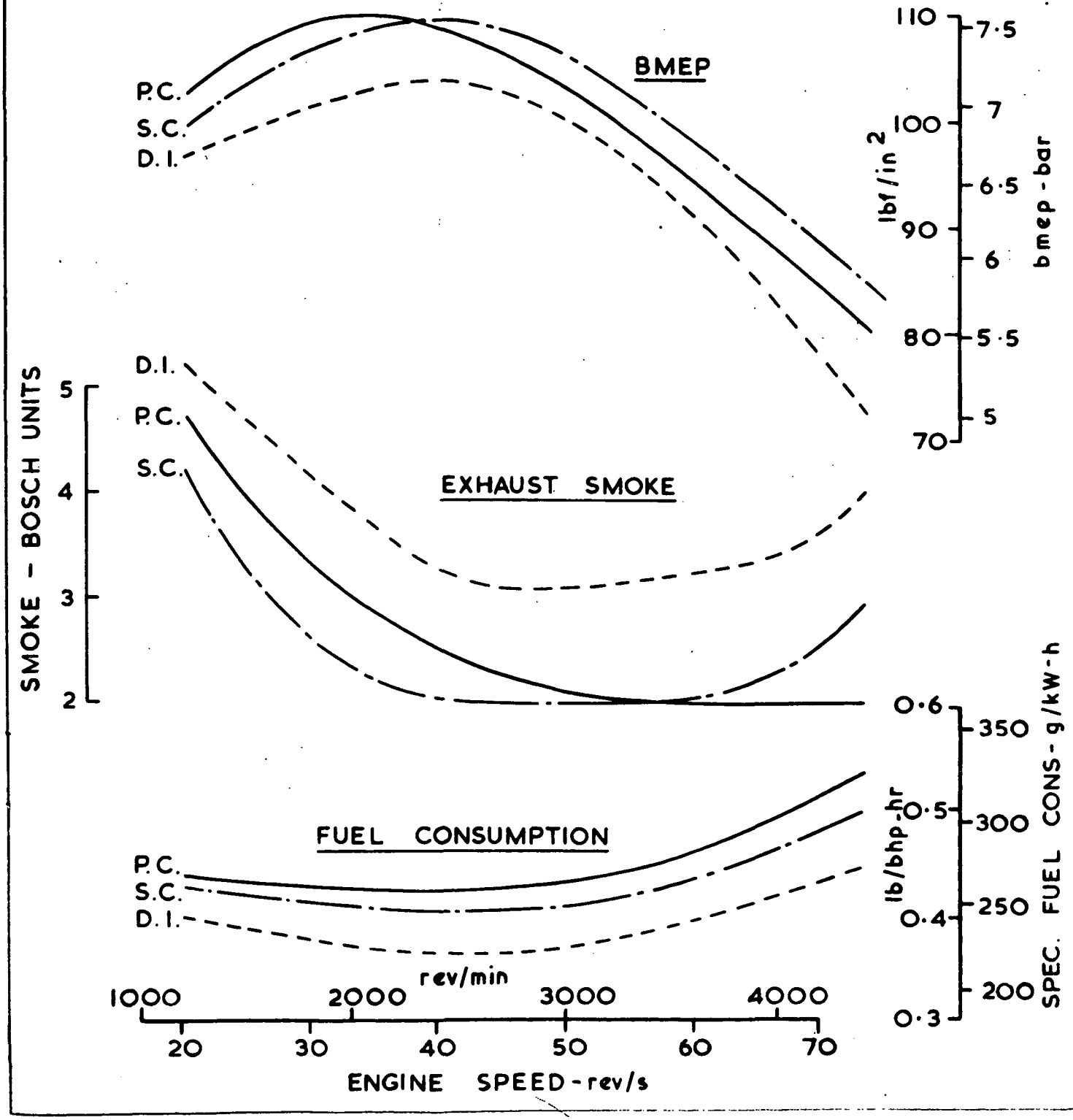

FIG. No. 4·6
DRG. No. D25713A
DATE:- 28-7-74

NO EMISSION AND PERFORMANCE CHARACTERISTICS OF D.I. AND SWIRL CHAMBERS.

AVERAGE DATA FROM NATURALLY ASPIRATED ENGINES AT 21:1 AIR : FUEL RATIO & PISTON SPEED CIRCA 6·5 m/SEC.

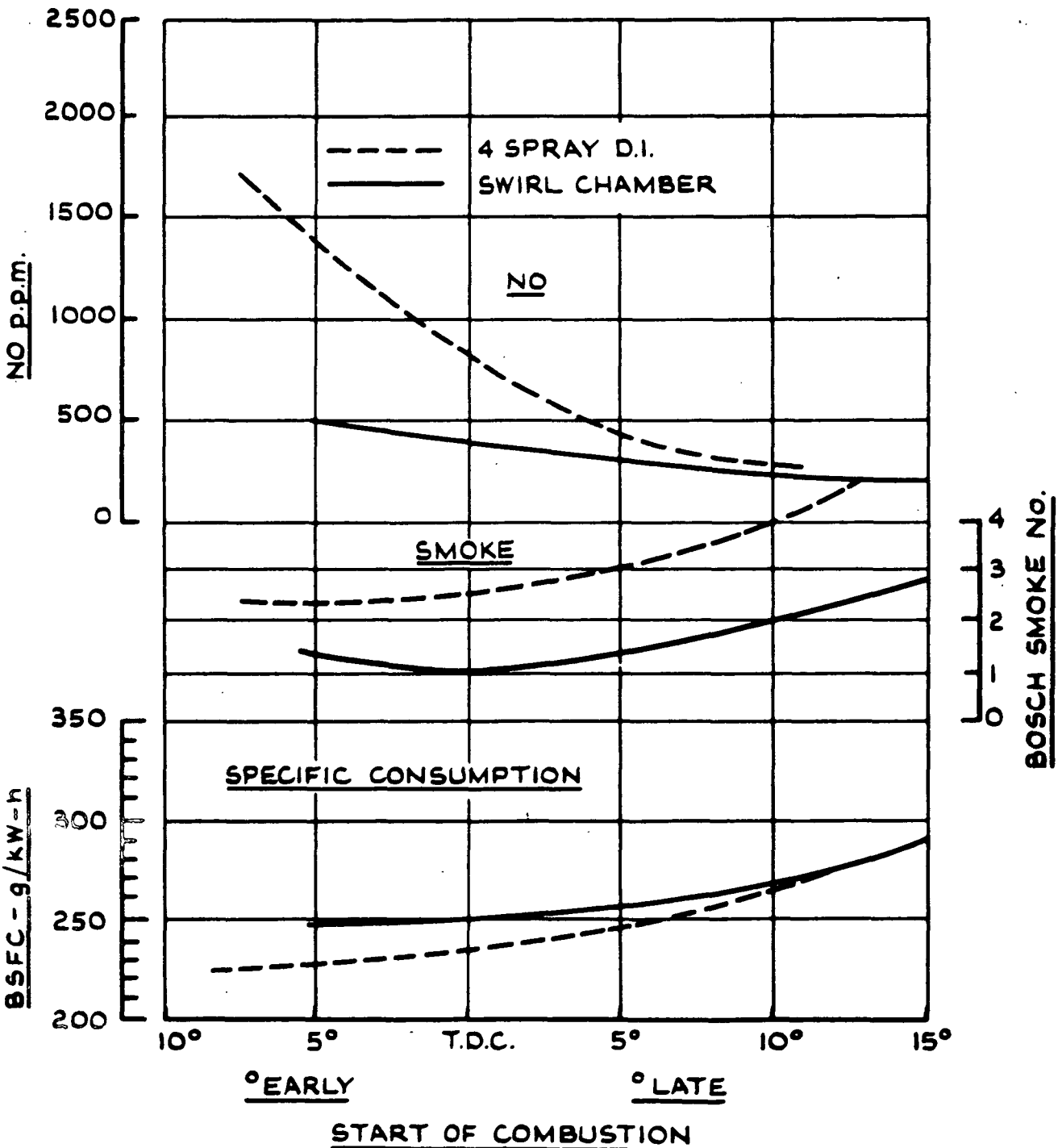

FIG. No. 4-7

Drg. No. D 26097

Date 28-7-74

EFFECT OF EXHAUST GAS RECYCLE ON PERFORMANCE & SMOKE OF A SIX CYLINDER SWIRL CHAMBER ENGINE OVER ITS LOAD RANGE AT 28 rev/s (1700 rev/min)

RECYCLED GAS COOLED TO 50 °C (122 °F)

⊙——⊙ ZERO RECIRCULATION

+——+ 10 % EXHAUST RECIRCULATION

△——△ 20 % EXHAUST RECIRCULATION

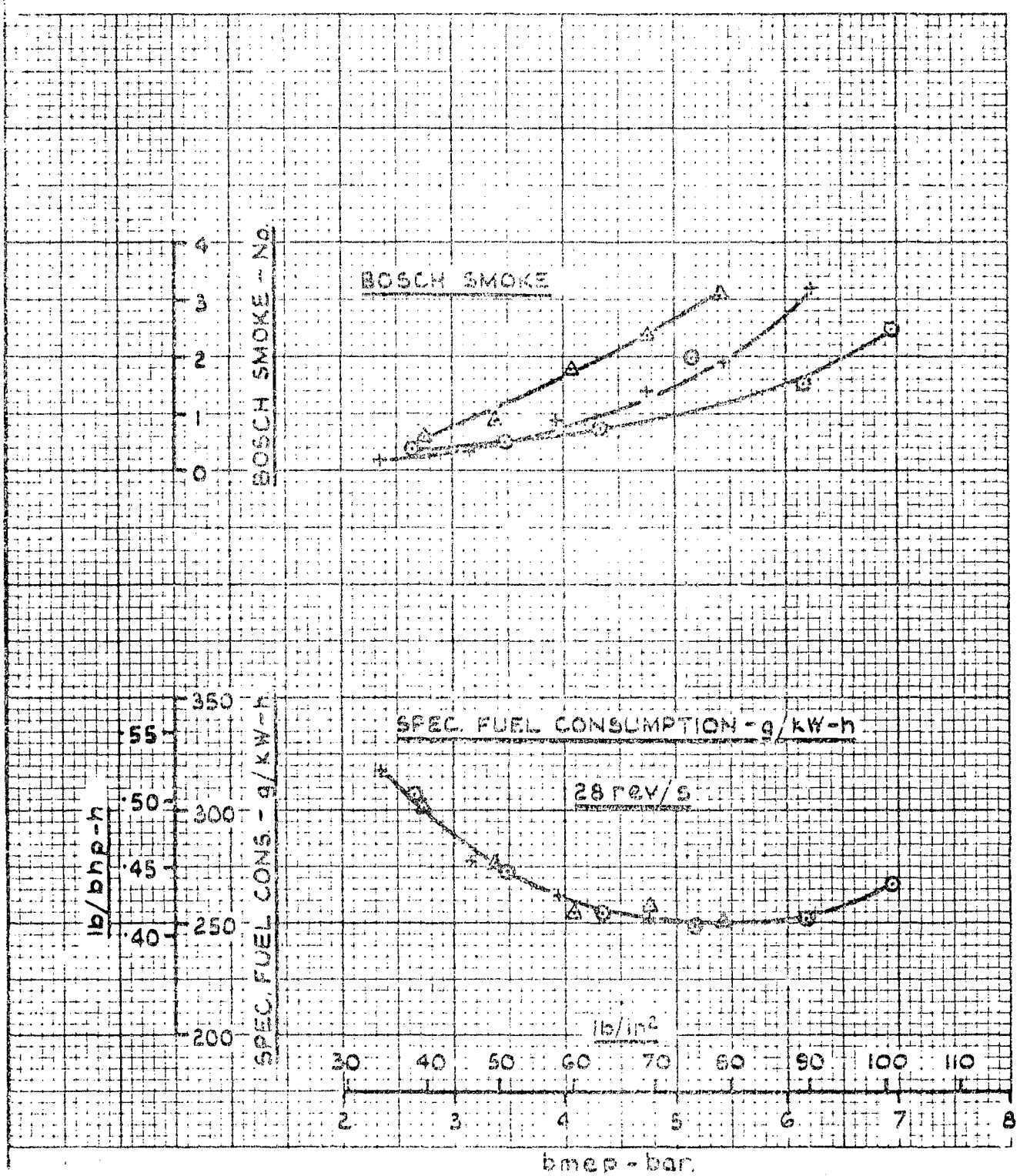

FIG. No. 4·8
Drg. No. D26069
Date 28-7-74

THE RESPONSE OF NATURALLY ASPIRATED ENGINE NOx EMISSIONS TO LOAD.

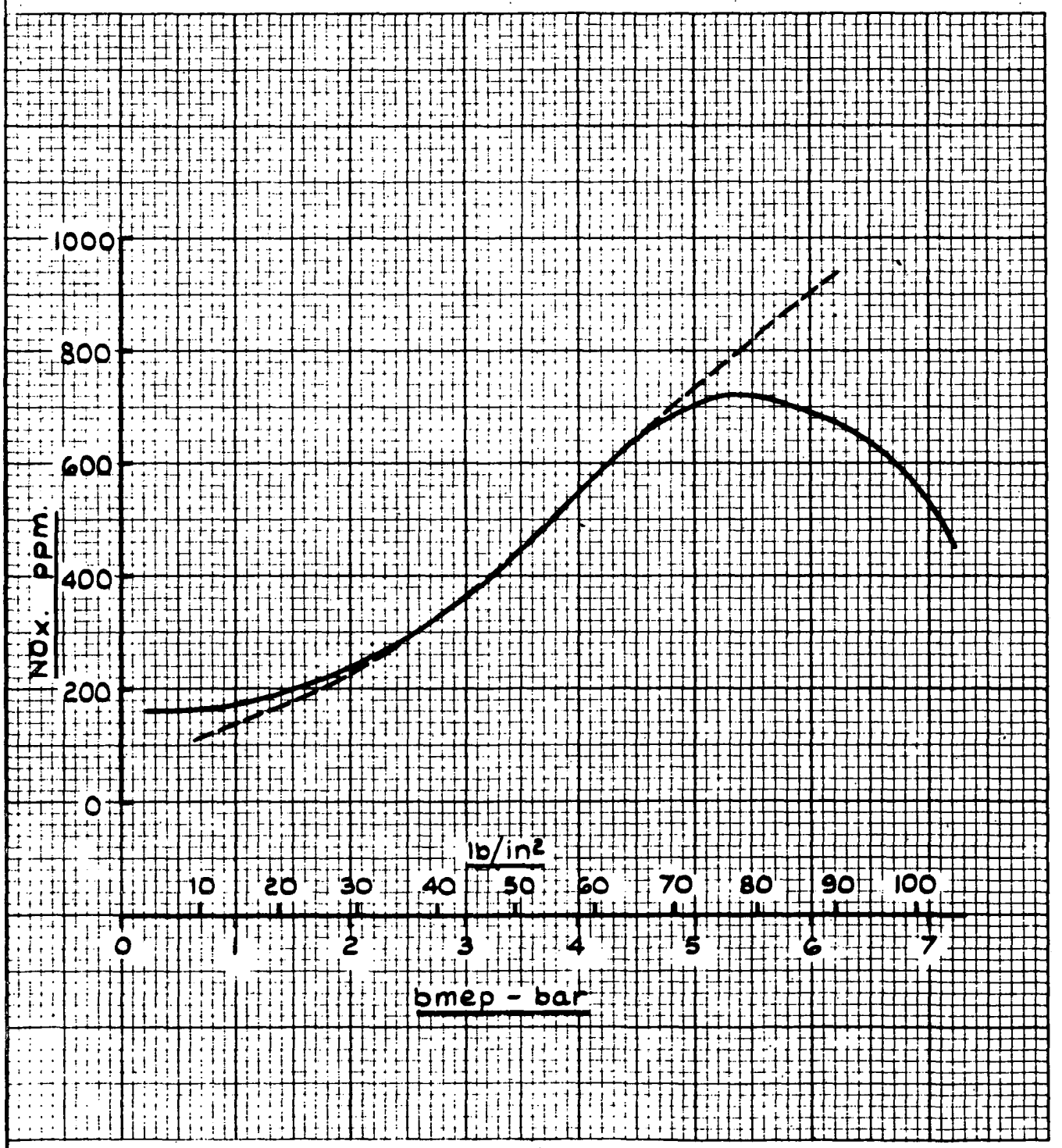

FIG. No 4-9
Drg. No. D26070
Date 28-7-74

THE RESPONSE OF TURBOCHARGED ENGINE NOx EMISSIONS TO LOAD.

——— 6 CYL. 6·8 l COMET V ENGINE
– – – 6 CYL. 5·41 l D.I. ENGINE
} FULL SPEED, TIMING RETARDED 6°.

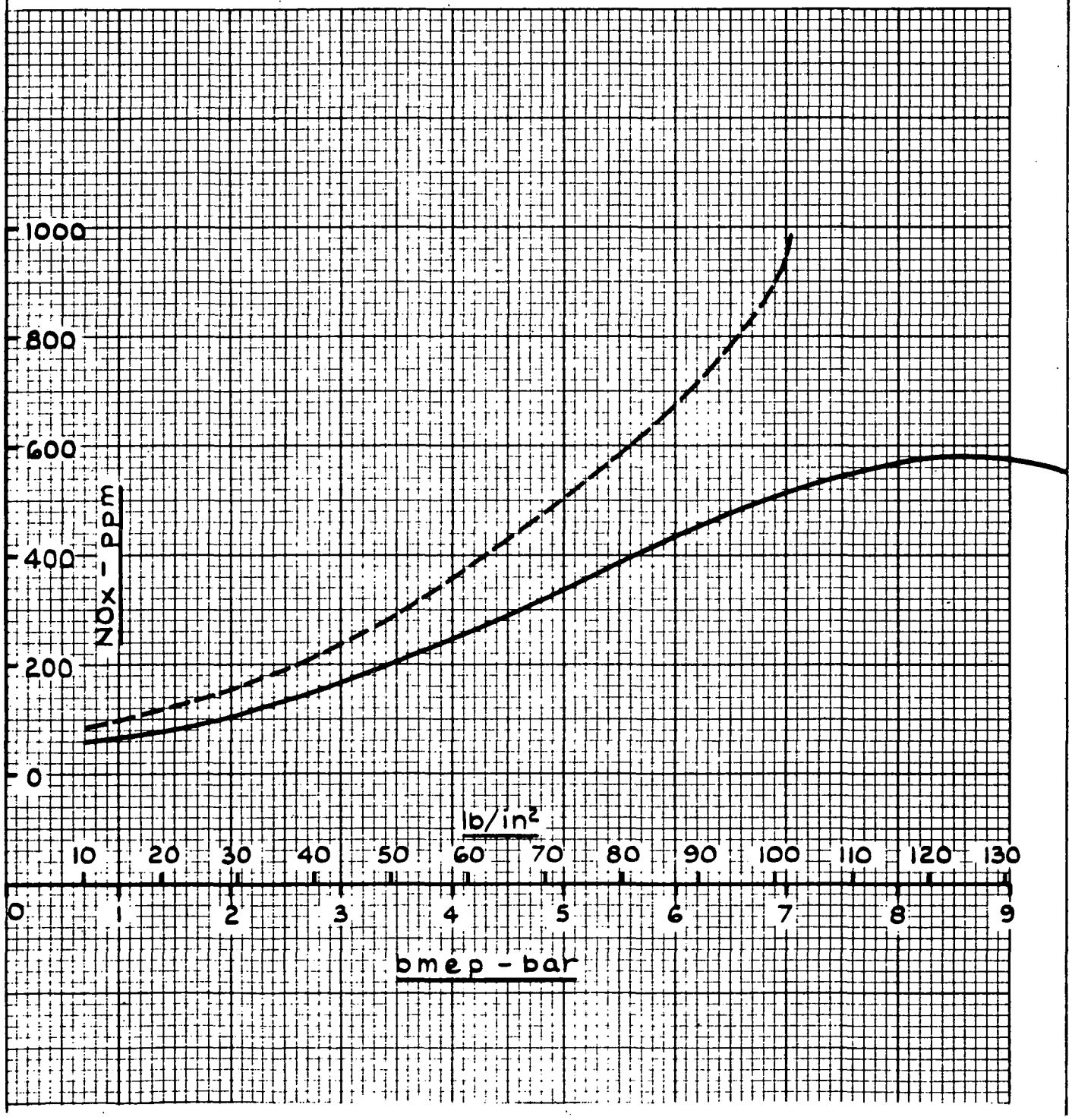

Figure 4-10

LIGHT DUTY DIESEL VEHICLE EMISSION LEVELS - 1975 FTP (CVS-CH)

VEHICLE	INERTIA WT	SWEPT VOL. IN^3	COMB. CH.	TEST LAB	G'BOX	NO. OF TESTS	HC g/mile	CO g/mile	NO_x g/mile	MPG (US gall)	l/100 km
MERCEDES 220D	3500	134	PRECH	EPA	4 AUT	5	0.34	1.42	1.43	23.6	10.0
*MERCEDES 220D	3500	134	PRECH	EPA	4 AUT	5	0.28	1.08	1.48	24.6	9.5
OPEL REKORD	3000	127	COMET	EPA	3 AUT	4	0.40	1.16	1.34	23.8	9.9
PEUGEOT 504	3000	129	COMET	EPA	4 MAN	5	3.11	3.42	1.07	25.2	9.3
DATSUN 220C	3500	132	COMET	EPA	4 MAN	2	0.21	1.69	1.72	24.0	9.8
DATSUN 330C	4500	198	COMET	EPA	4 MAN	3	1.70	3.81	1.71	21.4	11.0

* MODIFIED F.I.E. - ALL OTHER ENGINES IN PRODUCTION BUILD (NOTE DATSUN 330C WAS A NON-STANDARD MARRIAGE WITH A 1973 FORD F250 PICK-UP)

Figure 4-11

DATA ON CURRENT SMALL 4-CYLINDER HIGH SPEED DIESEL ENGINES FOR AUTOMOTIVE APPLICATIONS

Engine Make and Model	Bore x Stroke mm	Swept Volume l	Power Output kW (DIN)	Rated Speed rev/s	Weight kg	kg/l	kg/kW	kW/l
Peugeot XLD	75 x 71 78 x 71	1.25 1.36	30 33.5	83.3 83.3	152*	122*	5.10*	23.7 24.8
Prototype ⊕	76 x 76	1.39	27	66.7	216	155	7.80	19.8
BLMC 1.5	73 x 89	1.49	29.5	66.7	185	125	6.29	19.7
Perkins 4.108	79 x 89	1.76	36.5	66.7	208	118	5.70	20.7
Prototype	80 x 89	1.80	38	66.7	174	97.5	4.58	20.4
Peugeot XDP 4.88	88 x 80	1.95	45	75.0	170	87.4	3.80	23.0
Isuzu C190	86 x 84	1.95	46 gross	73.3	205	105	4.44+	21.4+
Opel 2100	88 x 85	2.07	45	73.3	199	96.5	4.45	21.6
Prototype	86 x 90	2.09	49 gross	70.0	208	99.5	4.65+	21.6+
Peugeot XDP 4.90	90 x 83	2.11	48.5	75.0	185	87.5	3.82	23.0
Nissan SD 22	83 x 100	2.16	48.5	66.7	186	85.5	3.84	22.4
Citroen CRD90	90 x 85.5	2.17	46	75.0	206	95	4.49	21.0
Mercedes 220D	87 x 92.4	2.20	45	70.0	184	83.9	4.11	20.4
Land Rover 2¼	90 x 89	2.29	50 gross	66.7	243	106.5	5.39+	19.7+
Ford York	94 x 86	2.36	46	60.0	222	94.5	4.80	19.6
Mercedes 240D	91 x 92.4	2.40	48	70.0				20.1
BLMC 2.5	89 x 101.6	2.52	48	58.3	268	106	5.62	18.9
Mitsubishi 4DR50	92 x 100	2.66	56.5	58.3	261	98.2	4.60	21.3

⊕ Included for reference, circa 1956

* Weight includes integral gear box

\+ Assuming DIN power 10% less than gross

FIG. No. 4-12

Drg. No. D24812A

Date 9.1.74

COMPARISON OF DIESEL AND GASOLINE ENGINE WEIGHT/SWEPT VOLUME

GASOLINE CURVE TAKEN FROM I. MECH. E. PAPER C343/73

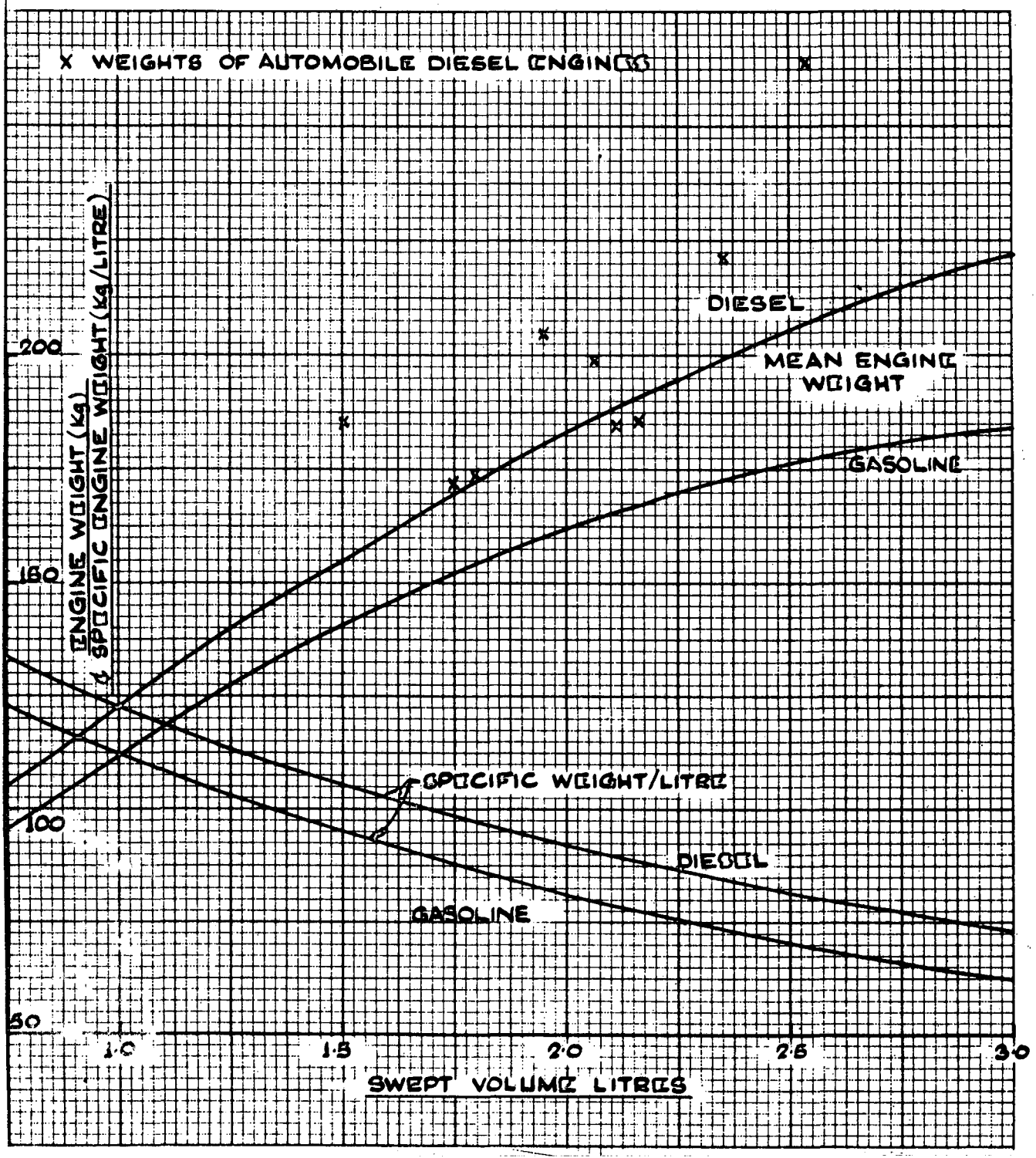

Figure 4-13

DIESEL V. GASOLINE WEIGHT ANALYSIS FOR 4 CYLINDER ENGINES

Component	Diesel		Gasoline		Diesel Penalty kg
	Item	Weight kg	Item	Weight kg	
Combustion & Ignition Equipment	4 Cyl. DPA + Delivery Valves	7.13	Distributor Lucas	1.13	
	4 Injectors Complete	1.85	Plugs + HT Lead		
	4 Heater Plugs	.34	Coil Lucas LA12	.79	
			Carburettor	1.47	
		9.32		3.84	5.5
Cylinder Head (Cast Iron)	Statistical	25	Statistical	19	6
Cylinder block difference due to increased height etc.					2
Pistons & Con. Rods	4 Units	8.1	4 Units	5.9	2.2
Crankshaft					
Flywheel	Insufficient statistical data - estimated only	16.5	Insufficient statistical data - estimated only	12.3	4.2
Starter Motor	1 Lucas M45G	10.5	1 Lucas 2M100	7.9	2.6
					17
Vacuum Pump	1 off Pierburg	1	None	-	1
Battery	1 Lucas BT11A 72 amph	29.5	1 Lucas BT7A 43 amph	19.5	10
Sound absorption material	Estimated	2			2
					13
	ESTIMATED TOTAL PENALTY				35.5
Vehicle	Mercedes 220D	1375	Mercedes 220	1335	40
	Peugeot 504D	1279	Peugeot 504	1230	49
	Peugeot 204D XLD	955	Peugeot 204 (1130 cc)	935	20

FIG. No. 4-14
Drg. No. D 26071
Date 28-7-74

POWER / LITRE OF SOME CURRENT GASOLINE & DIESEL ENGINES.

⊙ GASOLINE ENGINES
X DIESEL ENGINES

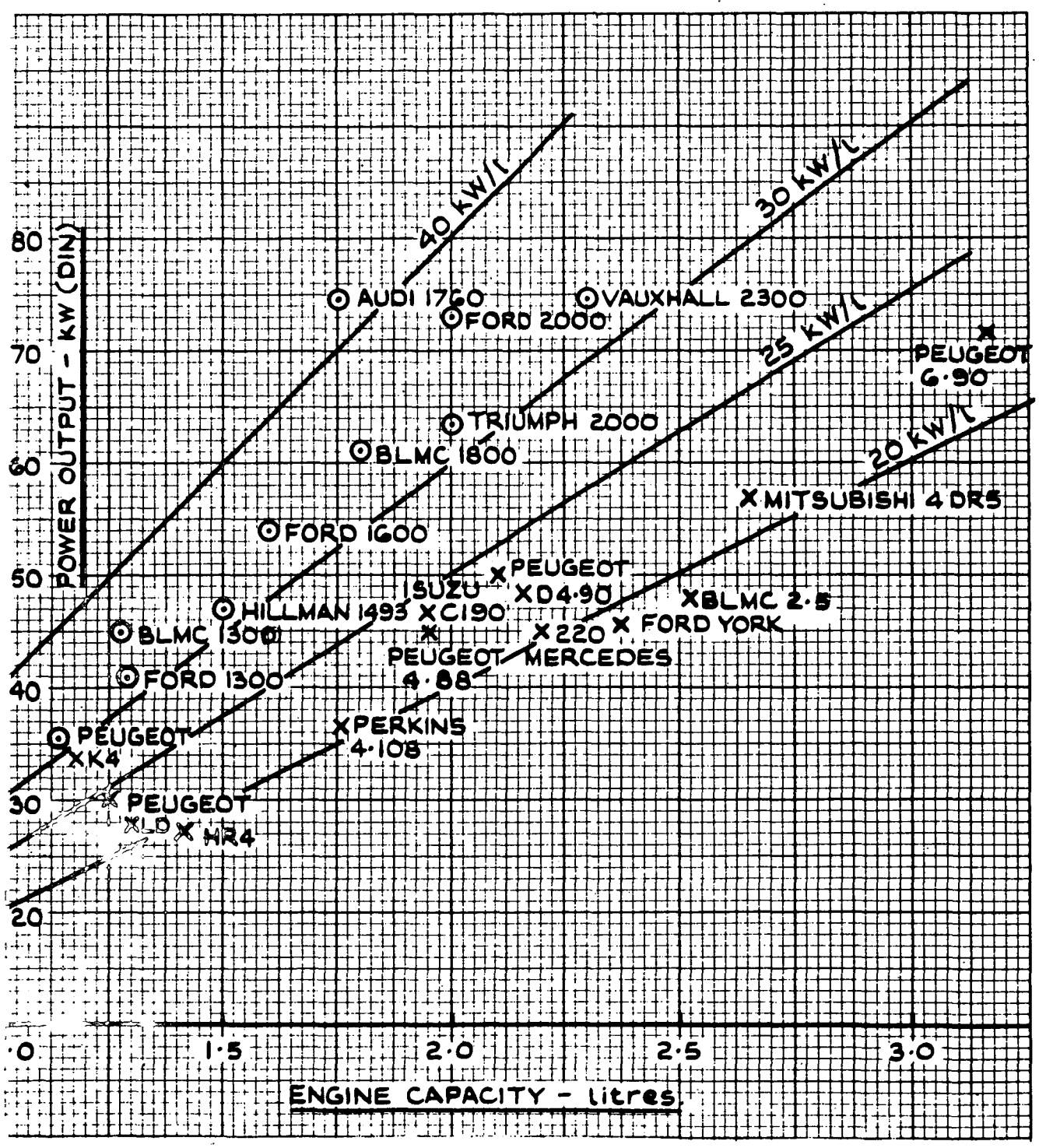

FIG. No. 4-15
DRG. No. D26093
DATE:- 28-7-74

VEHICLE FUEL CONSUMPTION Vs INERTIA WEIGHT DURING LA4 1975 (CVS-CH) TEST CYCLE.

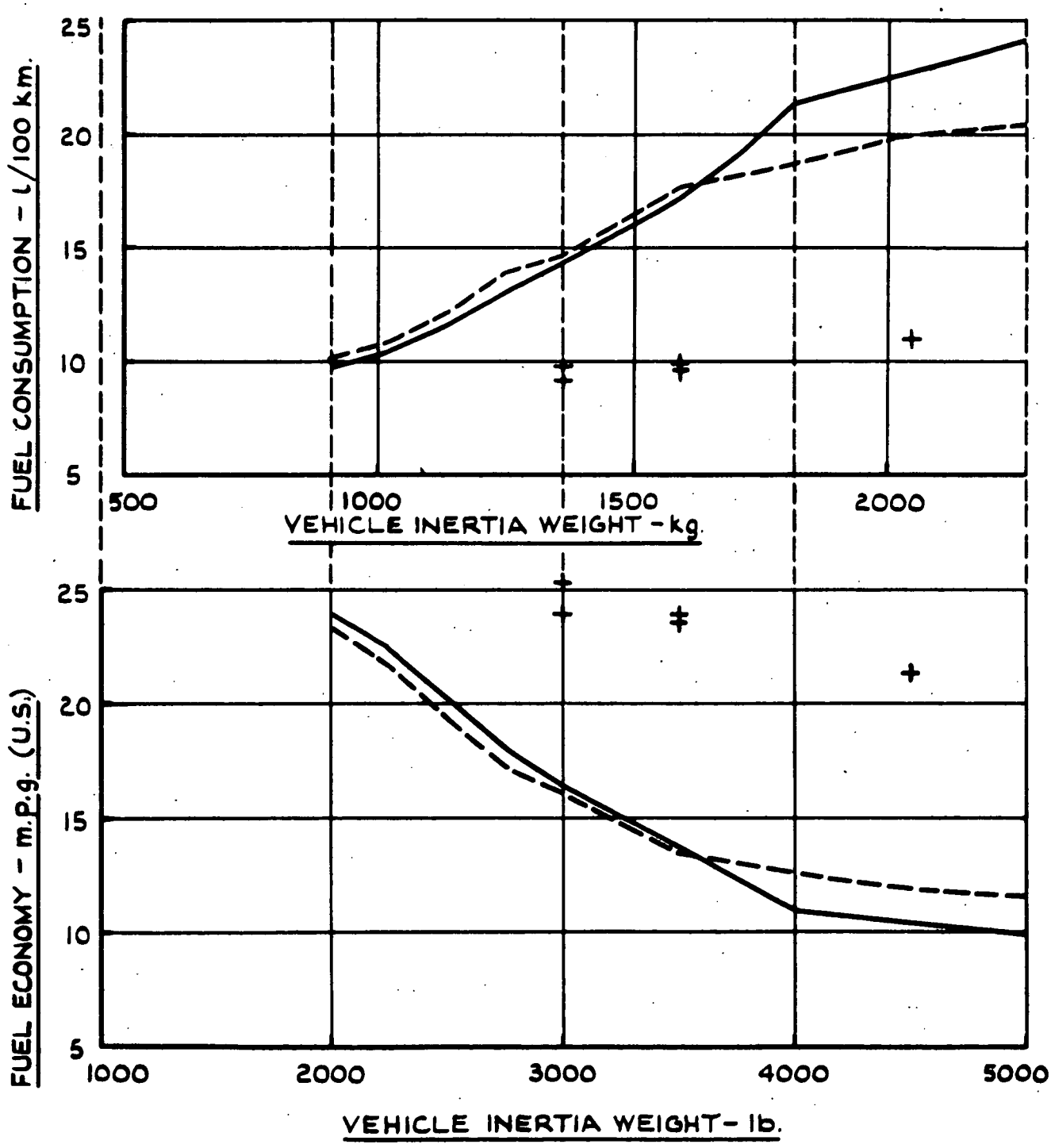

FIG. No. 4-16
DRG. No. S5802
DATE:- 31-7-74

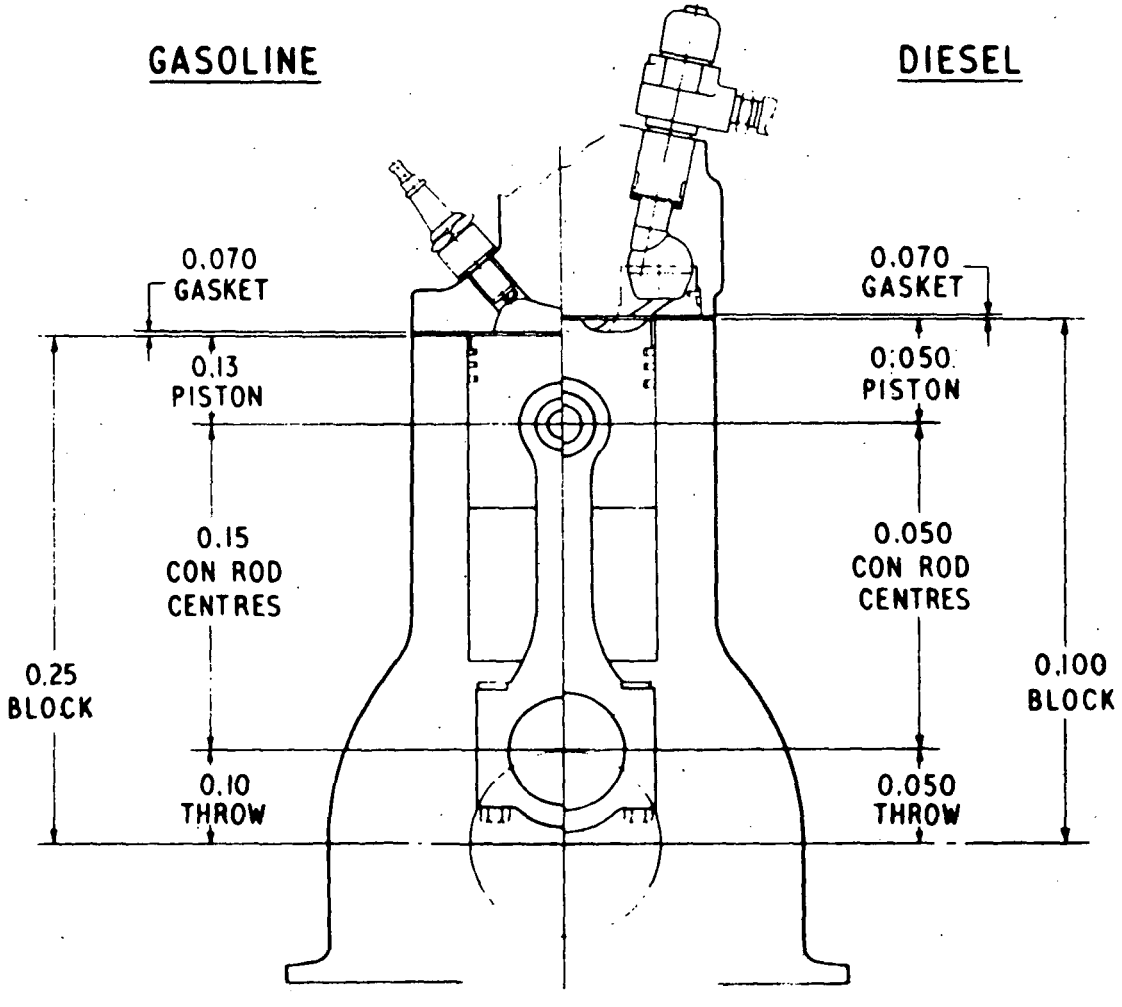

TOLERANCES CONTROLLING PISTON TO CYLINDER HEAD CLEARANCE MM.

FOR ENGINES OF 65 m/m TO 110 m/m STROKE.

FIG. No. 4-17
Drg. No. D26072
Date 28-7-74

EFFECT OF INLET VALVE TIMING ON LOW SPEED TORQUE.

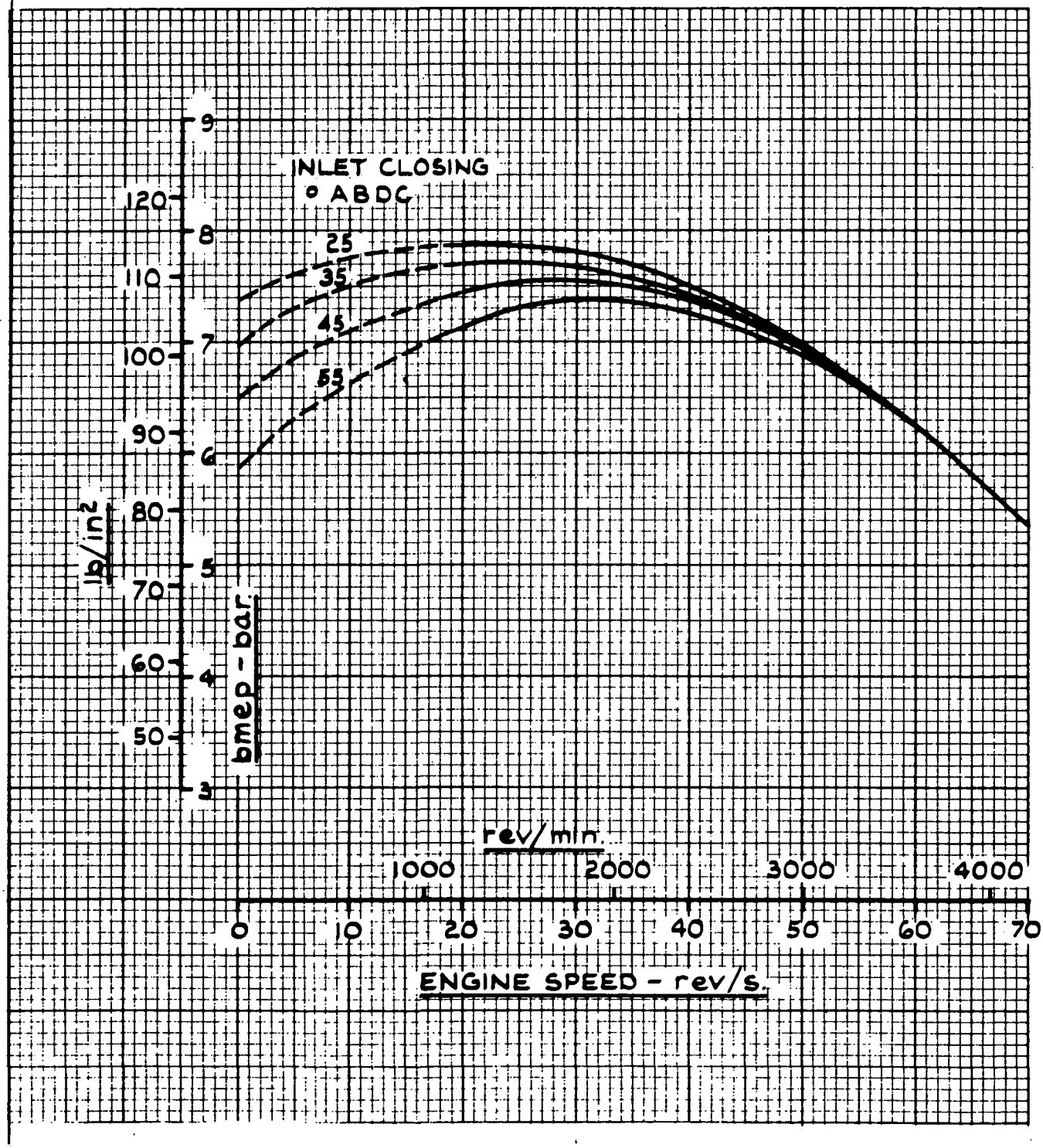

FIG. No. 4-18
DRG. No. D25722
DATE:-

TORQUE - COMPARISON
ON A 300 HP DI - DIESEL ENGINE

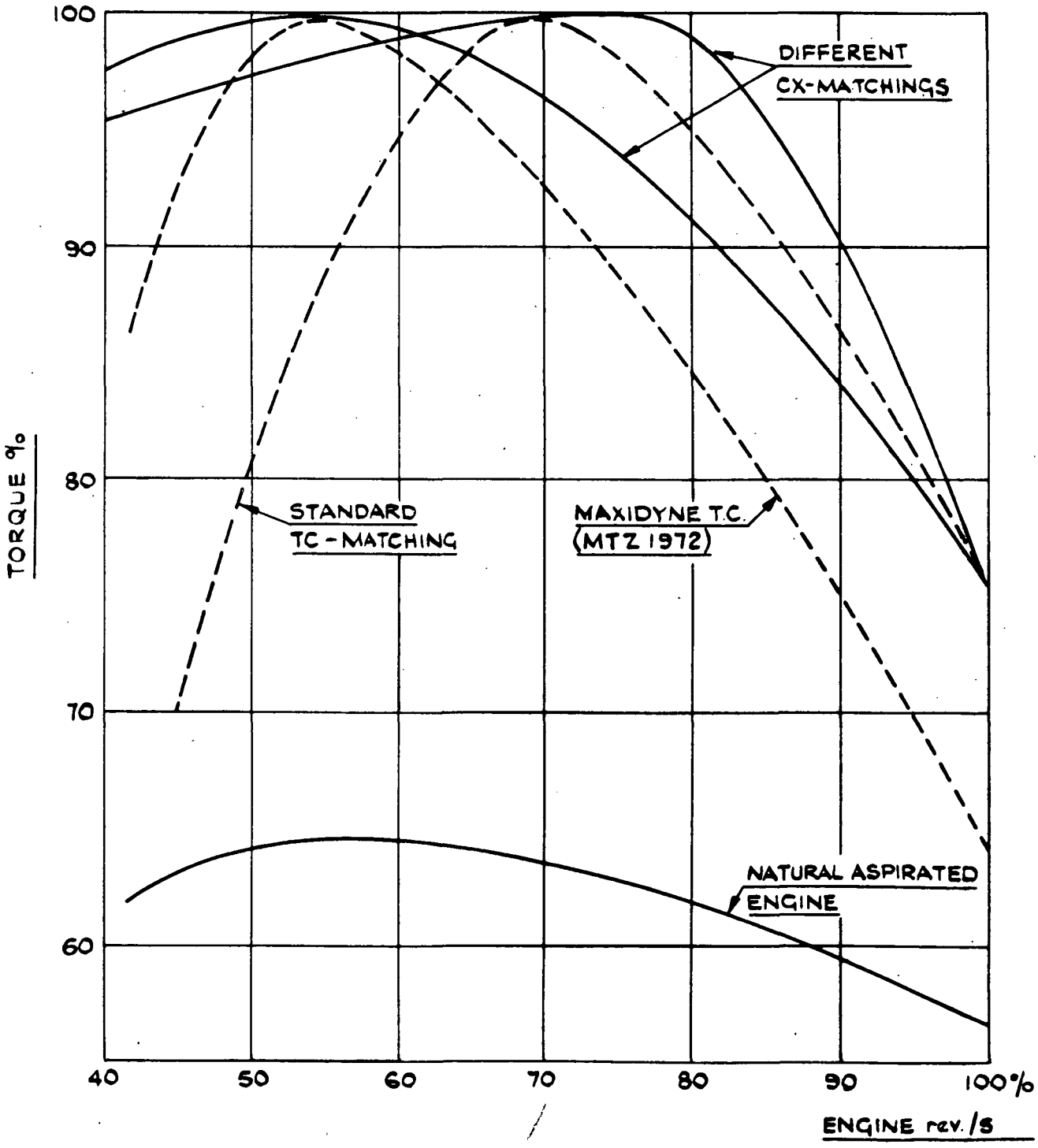

FIG. No 4-19
Drg. No. D 26073
Date 28-7-74

HEAT REJECTED TO COOLANT FOR SIMILAR DIESEL & GASOLINE ENGINES OVER THE LOAD AND SPEED RANGE

——— DIESEL. - - - - - GASOLINE.

SWEPT VOLUME, BOTH ENGINES = 1·49 l

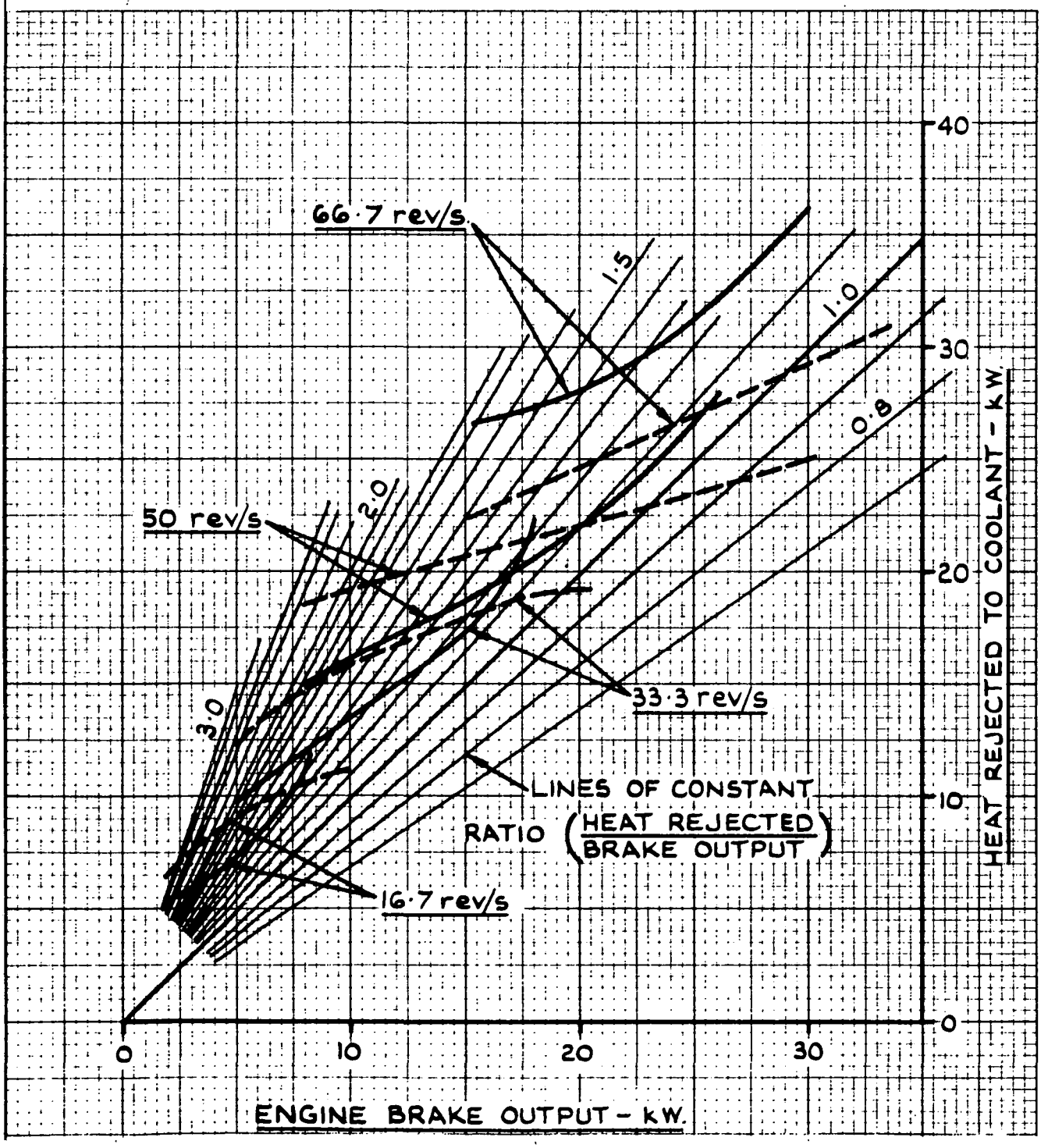

SECTION 5

ENGINE CONFIGURATION STUDY

This section contains details of the diesel engine configurations which were schemed as potentially viable light duty diesel power plants. Information on two comparable gasoline power plants is also included.

The diesel power plants were all designed to propel the target vehicle for the study, a 4-5 seat sedan with a loaded weight of about 1600 kg (3500 lb) capable of 0-96 km/h (0-60 mph) in 13.5 s and 32-112 km/h (20-70 mph) in 15 s. Computer calculations indicated that a bare engine power of about 97 kW (130 bhp) was required if a conventional 3-speed automatic transmission was assumed.

The engines included in the configuration study were as follows :

1. V-8 Gasoline 4-stroke
2. IL-6 Gasoline 4-stroke
3. V-8 Indirect Injection Diesel 4-stroke
4. 6 Cylinder Indirect Injection Turbocharged Diesel 4-stroke
5. 6 Cylinder Indirect Injection 'Comprexed' Diesel 4-stroke
6. 6 Cylinder Direct Injection Turbocharged Diesel 4-stroke
7. 6 Cylinder Direct Injection 'Comprexed' Diesel 4-stroke
8. 6 Cylinder Indirect Injection Loop-scavenged Diesel 2-stroke
9. 6 Cylinder Direct Injection Uniflow Diesel 2-stroke
10. 4 Cylinder Direct Injection Compound Diesel 4-stroke
11. 2-stage 2-bank Rotary Diesel '4-stroke'

Drawings and performance curves were prepared for all the diesel power plants which were schemed for the primary emissions environment, i.e. HC - 0.41 g/mile, CO - 3.4 g/mile, NO_x - 1.5 g/mile. No diesel configurations were prepared for the secondary emissions target (HC - 0.41 g/mile, CO - 3.4 g/mile, NO_x - 0.4 g/mile) since it was considered that no current technology diesel engine could meet this NO_x target.

Introduction

The literature survey and Ricardo in-house knowledge both indicate that a diesel engine would provide a viable power plant for a passenger car. Given this general conclusion the study required that the most promising diesel variants be schemed in sufficient detail to allow a reliable assessment of their potential.

Requirements of Vehicle

For the purposes of this study two target emission levels were envisaged. These were :-

Primary (or short term)

HC	0.41 g/mile
CO	3.4 g/mile
NO_x	1.5 g/mile

Secondary (or long term)

HC	0.41 g/mile
CO	3.4 g/mile
NO_X	0.4 g/mile

The vehicle for these environments was to be a passenger car (typically a 4/5 seat sedan) weighing less than 1600 kg (3500 lb) test weight and capable of meeting the EPA standard car performance specifications, i.e. 0-97 km/h (0-60 mph) in less than 13.5 s, 32 - 112 km/h (20-70 mph) in less than 15 s, capable of overtaking a 80 km/h (50 mph) truck in less than 15 s.

To assist in the definition of the power plant a computer program was written to allow the maximum power output of the engine, the shape of its torque curve and the transmission system necessary to achieve these acceleration capabilities to be calculated.

Use of this program showed that with a three-speed automatic gearbox and the final drive ratios selected to give 136 km/h (85 mph) top speed a bare engine power of 97 kW (130 bhp) was required at the rated speed to satisfy the acceleration target. This implies that the vehicle has

acceleration 'in hand' at its designed top speed and this is indeed true of the diesel power plants which will have a governor cut-off at their rated speeds in order to protect the engine. Various gear ratios and amounts of torque back up were tried and the minimum power plant requirements were finally selected as :-

Rated Speed	96 kW	128 bhp
.75 Rated Speed	76 kW	102 bhp
.5 Rated Speed	53 kW	71 bhp
.25 Rated Speed	17 kW	22.7 bhp

i.e. 96 kW (128 bhp) engine with 10% torque back up at 50% speed and a 4:1 speed range.

Feasibility of achieving Target Emissions

While each and every type and layout of diesel engine will have problem areas when used as a passenger car engine, the only area in which performance targets have been set is that of exhaust emissions.

As has been explained in the report on Task 1, the great majority of diesels emission data available refers to tests carried out on engine test beds under the 13 mode test procedure and in the experience of Ricardo and others it is not possible to correlate this data directly with results which would be obtained with CVS-CH testing. It would in fact be possible to estimate the results of cycle testing from 'maps' of data collected under steady state conditions but such maps are not available for many of the engines of interest.

It is estimated however that a 128 bhp indirect injection engine fitted in a 1600 kg (3500 lb) car would require an NO_x reduction of some 30-40% from current levels in order to achieve the 1.2 to 1.4 g/mile necessary to guarantee 1.5 g/mile in a production car. Such reductions should be possible, with some penalty in fuel economy, by retarding the injection timing but it might be necessary in some cases to employ modulated exhaust gas recirculation.

Ricardo do not believe however that it is possible with current knowledge to achieve the secondary target levels of 0.4 g/mile NO_x with a diesel engine fitted to the specified vehicle. No attempt has therefore been made in this report to rate any of the diesel engine designs at any tighter emissions target than 1.5 g/mile NO_x.

GASOLINE ENGINE

While no engine configuration studies have been carried out on gasoline engines, it was necessary to have estimates of performance and package size for comparison with the various diesel engines.

Two gasoline engines were studied, the first being a V-8 following current American practice both in design and performance, and the second a 6 cylinder engine more typical of European practice.

V-8 Gasoline Engine

Specific Performance and Emissions

Using typical specific performance levels for this type of engine, i.e. 21.0 - 22.0 kW/l (0.46 - 0.48 bhp/CID), the exercise target power output demands a swept volume of 4.5 l (275 CID). This capacity in conjunction with a rated speed of 66.7 rev/s (typical of most standard American engines) produces 96 kW (128 bhp) at a brake mean effective pressure of 6.26 Bar (92 lb/in^2) and a peak torque of 285 N.m (210 lb.ft) at 41.6 rev/s gives 25% torque back up resulting in satisfactory driving characteristics with a simple three or four speed transmission. The torque curve for this engine can be seen in Figure 5-1.

The precise engine specification considered is as follows :

Ø 97 mm (3.82") x 76 mm (3.00") x 90°, V-8
4.5 l (275 CID)
96 kW (128 bhp) at 66.7 rev/s (6.26 Bar, 92 lb/in^2 bmep)
285 N.m (210 lb.ft) at 41.6 rev/s (7.83 Bar, 115 lb/in^2 bmep)
Estimated weight 250 kg (550 lb).

The above performance levels can be achieved with the engine in low emissions build but external hang on emissions control devices are necessary, their complexity depending on the severity of the emissions target. The primary project targets of 1.5 g/mile NO_x, 0.4 g/mile HC and 3.4 g/mile CO in a 1600 kg (3500 lb) inertia weight car can be achieved by using close tolerance sophisticated carburettors in conjunction with modulated exhaust gas recycle, air injection into the exhaust and an oxidation catalyst. All these devices can be considered current technology and in this case the trade-off for low emissions is well known (increased power plant weight, first cost, maintenance

cost, a demand for lead free fuel, and a depreciation in vehicle fuel economy). The load range fuel consumption curves shown in Figure 5-2 are estimated for this engine in 1.5 g/mile NO_x build.

The secondary project emissions objectives of 0.4 g/mile NO_x while maintaining HC and CO levels demand the additional use of a reducing catalyst and possible further catalytic devices (getter box) to protect the reducing catalyst from oxygen spikes. Durability of such systems has yet to be proven although recent developments appear promising (Gould 3 System). Due to the need to run with low oxygen concentration in the exhaust (less than 0.5%) it is necessary to run with a mixture strength approaching stoichiometric conditions with a resultant fuel economy penalty. Depending on the exact baseline emission levels of the engine, it may be possible to reduce EGR levels compared with the 1.5 g/mile NO_x build with resultant increases in thermal efficiency, particularly at the light load end of the operating range. The combined effect of these two changes is likely to be a small loss in vehicle fuel economy compared with current vehicles.

From EPA data, a fuel consumption level of 18 l/100 km (13 mpg) has been assumed for the gasoline powered vehicle when in 1.5 g/mile NO_x build. Reducing NO_x emissions to 0.4 g/mile will probably increase this to a level in the region of 19 l/100 km (12.5 mpg).

From data on current American V-8 engines, engine weight will be 250 kg (550 lb).

Using established noise prediction formulae, bare engine noise levels on a test bed would be 95 dBA at rated load and speed. This correlates with a drive-by noise level of 74 dBA at 15.23 m under standard American test conditions.

6 Cylinder Gasoline Engine

The first and most obvious difference between American and European engines of this power range is that of specific performance. Whereas the American V-8 gasoline engine runs to around 67 rev/s and develops 21 kW/l (0.47 bhp/CID), the European engine runs to at least 83 rev/s and develops a minimum of 32 kW/l (0.7 bhp/CID) normally nearer 36 kW/l (0.8 bhp/CID). The major reason for these vastly differing

philosophies is one of economics; mainly because of taxation European fuel prices have always been high in terms of real spending power with a resultant continuing trend towards small capacity, high economy, engines and cars. On the other hand, the price of fuel in America has always been low and fuel consumption has never been a major consideration; engine size has therefore increased over the years to improve driveability and to some extent as a sales feature.

A total power requirement of 96 kW (128 bhp) and a torque back up of 20% to enable the prototype vehicle to achieve its target performance could be achieved easily with a 3 litre, six cylinder engine running to 83.3 rev/s. A typical oversquare cylinder configuration of 88 mm bore x 82 mm stroke (3.46" x 3.22") has been selected. The use of petrol injection will ensure good distribution between cylinders and should allow the engine to run at generally leaner mixture strengths than if carburettors were used. Estimated performance in the form of torque curves and load range fuel consumption loops can be seen in Figures 5-3 and 5-4. The load range consumption curves have been based on levels which are currently being achieved by current production engines. Note that fuel consumption levels at light load conditions (on a bmep basis) are similar to those of the V-8 engine. At high load factors most current V-8 engines still suffer a throttling effect (often the intake valves or ports are restrictive in order to further improve low speed torque) with a resultant fuel consumption penalty whereas the more high tuned six cylinder engine with its need for improved breathing characteristics should return low fuel consumption at these conditions.

These performance figures and the project primary emissions targets could be achieved using the same external hang-on control devices as the V-8 gasoline engine, i.e. modulated exhaust gas recycle, air injection and an oxidation catalyst.

Again, as in the case of the V-8 engine, the more severe NO_x levels of 0.4 g/mile should be achieved by the addition of a reducing catalyst system to the above package with the same order of magnitude increase in vehicle fuel consumption levels compared with the 1.5 g/mile NO_x build.

Overall fuel consumption levels during CVS-CH testing have been predicted at 15.5 l/100 km (15 mpg). This results in a total fuel consumption saving of over 10% compared with the V-8 gasoline engine.

From European data, the predicted engine weight is 186 kg (410 lb), a reduction of 64 kg (140 lb) compared with the V-8 engine.

Estimated drive-by noise levels of this engine in the prototype vehicle are 77 dBA at 15 m (50 ft). The reason for the 3 dBA increase in drive-by levels compared with the V-8 is the higher rotational speed of the 3 litre engine.

The completed specification for this engine is :-

Ø 88 mm (3.46") x 82 mm (3.22") x 6 (in-line)
2.99 l (183 CID)
96 kW (128 bhp) at 83.3 rev/s
232 N.m (171 lb.ft) at 50 rev/s
Estimated weight 186 kg (410 lb)

NATURALLY ASPIRATED IDI ENGINE

Specific Performance and Emissions

Of all the diesel candidates, this configuration is the closest to current technology and as such its emissions and performance predictions are those in which Ricardo have the greatest degree of confidence.

It would be possible to use either a swirl chamber or a prechamber of the form used by Daimler-Benz. The swirl chamber has a higher air utilisation at high speeds however and its smoke level drops more markedly as load is reduced, avoiding the 'plateau smoke' at low load which can be a problem with prechambers It was decided therefore to use a swirl chamber for the design study.

The effects of vehicle inertia and engine swept volume have already been calculated with the conclusions that this candidate in a 1600 kg (3500 lb) passenger car would give approximately 2 g/mile NO_x during CVS-CH testing, with the engine in optimum performance build. Retarding the injection timing by 6 - 8° (crank) should lower NO_x levels to 1.2 - 1.5 g/mile, and it is at this retarded timing condition that engine performance characteristics have been calculated. No other devices should be necessary to achieve the 1.5 g/mile NO_x target although a modest degree of exhaust gas recycle might be necessary if large production compliance type safety margins were demanded. The CO target of 3.4 g/mile should be achieved without any modification to the engine but some fuel pump/injector development might be necessary before the HC target could be attained. The modifications required to reduce HC levels are unlikely to affect engine performance adversely.

Thus, when considering the primary emissions targets, the only low emissions device likely to affect engine performance is the timing retard necessary for low NO_x levels. This will adversely affect both the specific power output and fuel consumption of the engine. In order to maintain the necessarily low smoke levels for passenger car operation, the specific power output of the engine has been taken as 20 kW/l (0.44 bhp/CID) - normally 22.0 - 22.5 kW/l (0.48 - 0.49 bhp/CID) for this type of engine in optimum performance build. A fuel consumption penalty of approximately 5% compared with optimum performance has been assumed over the load and speed range.

In the interst of fuel economy, engine speed is normally limited by friction and breathing considerations to a minimum piston speed of 13.0 m/s (2600 ft/min). Thus with a rated speed of 66.7 rev/s (in order to accept the same drive line as the gasoline engine) and a known swept volume, engine bore and stroke are automatically defined as follows :-

Bore	Ø 88 mm (3.46")
Stroke	98 mm (3.86")

Figures 5-5, 5-6 illustrate predicted test bed performance levels.

As stated earlier, fuel economy and power outputs are all based on current practice, allowing for some derate and fuel economy penalty due to the retarded injection timing.

From the test bed fuel consumption levels a fuel economy level of 11.5 - 10.5 l/100 km (20-22 mpg) has been predicted for the 1600 kg (3500 lb) inertia weight prototype while driving CVS-CH tests; current lower powered European diesel passenger cars of the same inertia weight average 10-9 l/100 km (24-26 mpg).

With current technology engines, empirical formulae have been devised which enable overall noise levels of engines to be predicted at the design stage with a remarkable degree of accuracy (normally $\pm$ 1 dBA). The predicted levels of this engine on a test bed is 97 dBA which should result in Californian drive-by noise levels of 76 dBA when it is installed in a typical American vehicle.

DESIGN NOTES

V-8 Specification — Figures :- 5-7, 5-8 and 5-9

Bore	88 mm - 3.46"
Stroke	98 mm - 3.86"
Displacement	4.78 l - 292 in^2
CR	20:1
bhp	96 kW (128 bhp) at 66.7 rev/s
bmep	7.5 Bar (109 lb/in^2) at 33.4 rev/s
power/unit piston area	0.00196 kW/mm^2
Piston speed	13 m/s - 2560 ft/min

Crankcase Controlling Features

Crankshaft

Crankshaft pins and journals based on maximum firing pressure of 86 Bar (1250 lb/in^2).

Crankpins	420 Bar (6100 lb/in^2)	Gas only
Journals	283 Bar (4100 lb/in^2)	

Connecting Rod and Piston

Small end eye	690 Bar (10,000 lb/in^2)	Gas only
Piston Boss	530 Bar (7,600 lb/in^2)	

Straight cut rod - 170 mm (6.7") CRS($\frac{L}{r}$ = 3.48)

Low piston height of 55 mm (2.16"), 63% bore, was chosen as no piston cooling oil was required.

Cylinder

Press fit dry liners for engine compactness and low cost.

Cylinder centres at 1.31 x cylinder bore controlled by bearing layout.

Camshaft

Central camshaft, operating valves through push rods.

Single camshaft chosen for minimum engine width.

Water circuit

Water pump on front face of block, discharging coolant through both banks of crankcase and cylinder heads through transfer pipes.

Cylinder Head

Figure 5-8 shows two possible port arrangements, cross flow and uni-sided.

Due to the complexity of inboard push rod,Comet chamber and a regular bolting pattern, a uni-sided head with up-swept inlet port was chosen.

This gives more freedom for the cylinder head casting and reduces the overall length of the engine.

Fuel Pump

Centrally mounted pump, gear driven from camshaft. Inboard injectors give short fuel pipe lengths.

Auxiliary Drives

Internal gear train chosen for long life and versatility. 'V' belt drives to alternator, vacuum pump and water pump. Gear driven hydraulic pump.

Overall Engine Package

Length	758 mm - 29.84"
Height	604 mm - 23.75"
Width	692 mm - 27.25"
Box Volume	0.32 m^3 - 11.18 ft^3
Estimated weight	320 kg - 700 lb

Boosted - Indirect Injection

Whilst the naturally aspirated engine should make an attractive power plant, the use of boosting will give an improvement in specific power output and hence a reduction in bulk and weight.

Boosting with both turbocharging and with the use of Comprex have been considered. Turbocharging does of course introduce other difficulties. A waste gate will be essential with the turbocharger matched to the engine at peak torque speeds. A boost responsive maximum fuel stop, or the equivalent, is necessary to prevent puffs of black smoke when accelerating and the time lag on acceleration due to turbocharger inertia may require a change in driving patterns.

The use of the Comprex should go a long way to eliminate this lag and to give a lift to the torque curve at low engine speeds. It is also quite easy to introduce modulated exhaust gas recirculation without the need of additional valves and controls. On the other hand, the device is somewhat bulky, is unproven in service, and at this time it is difficult to estimate its first cost. There can also be difficulties with smoke under starting conditions.

The indirect injection engine has a more severe thermal loading than does the direct injection engine, and this is accentuated by boosting. Oil cooled pistons will be essential for the boosted engine.

The required power output is conveniently given by a six cylinder engine of 90 mm (3.54 inch) bore and 100 mm (3.94 inch) stroke, and comparative arrangement drawings on both in-line and Vee versions are given in Figure 5-12. Once again, the Vee engine shows a substantial gain in length but the difference in bulk and weight is less significant.

It is predicted that a lightly boosted six cylinder IDI will have very similar emissions characteristics to the naturally aspirated engine although NO_x levels at the same combustion timings are likely to be marginally higher because of the increase in cylinder temperatures and pressures encountered in the boosted engine. These increased NO_x levels can be compensated for by means of an aftercooler to reduce intake charge temperatures, although this approach may be impractical in passenger car applications because of first cost, weight and bulk penalties, or by further retarding the injection timing. The extra amount of retard required to arrive at a comparable NO_x level to the naturally aspirated V-8 is difficult to quantify but Ricardo have assumed 2° which would result in a fuel consumption penalty of 2 - 3%. Therefore the total fuel consumption penalty of a 1.5 g/mile NO_x boosted IDI engine is likely to be up to 8% compared with the same engine in optimum performance build: a penalty of 6 - 8% has been assumed when constructing the load range consumption curves.

In the interest of improved vehicle economy, the maximum rotational speed of this engine has been limited to 60 rev/s.

Overall Configuration :-

Bore	Ø 90 mm (3.54")
Stroke	100 mm (3.94")
Rated Speed	60 rev/s

Figures 5-10 and 5-11 show detailed predicted performance levels of this engine. It is assumed that identical performances could be obtained from both in-line and Vee configurations.

The boosted engines will suffer a small but definite fuel economy penalty at light load conditions (only just becoming apparent at the extreme lower end of the load range curves) because of the power required to drive the boosting device, and this in conjunction with a need for a greater timing retard will result in a small vehicle fuel economy penalty compared with the naturally aspirated engine.

A level of 12-11 1/100 km (19-21 mpg) during the Federal test procedure has been predicted. Bare engine predicted noise levels are 96 dBA at 1 m which should result in Californian drive-by noise levels of 75 dBA when installed in a typical American passenger car.

DESIGN NOTES

In-Line 6 Specification

Figures 5-12, 5-13

Bore	90 mm - 3.54"
Stroke	100 mm - 3.94"
Total Cylinder Displacement	3.84 l - 234 CID
CR	19:1
bhp	96 kW (128 bhp) at 60 rev/s
bmep	9.3 Bar (135 lb/in^2 at 33.4 rev/s
power/unit piston area	0.00247 kW/mm^2 (2.15 hp/in^2)
Piston speed	12.0 m/sec - 2350 ft/min

Crankcase Controlling Features

Crankshaft

Crankshaft pin and journal loadings based on maximum firing pressure, P_{max} of 113 Bar (1650 lb/in^2)

Crankpins	450 Bar (6550 lb/in^2)	Gas only
Journals	345 Bar (5000 lb/in^2)	

Connecting Rod and Piston

Small end eye	640 Bar (9300 lb/in^2)	Gas only
Piston bosses	565 Bar (8250 lb/in^2)	

Conventional straight cut connecting rod with centres of 175 mm (6.9")

$$\left(\frac{L}{r} = 3.5 \right)$$

Piston compression height controlled by the requirement for oil cooling with fixed crankcase located spray nozzles.

Cylinders

Dry sleeve cylinder liners adopted for overall engine compactness and low cost.

Cylinder centres of 1.23 x cylinder bore controlled by coolant jacket requirement between adjacent barrels.

Tappets removed through side of crankcase.

Oil Galleries

Individual lubricating oil and piston cooling oil galleries. (Piston cooling oil unfiltered, hence smaller filter requirements).

Coolant Pump Position

Coolant pump located on the front face of the block discharging directly into the block jacket.

Cylinder Head Features

Uni-sided port lay out adopted for reasons of casting, simplicity and manifold compactness (turbocharger and manifold on same side of engine).

Pushrods, combustion chamber and injector positioned together on opposite sides of ports.

Fuel Pump

High mounted distributor type fuel pump, gear driven off the main camshaft timing train.

Mounted on same side of engine as the combustion chamber, hence compact fuel pipe runs.

Auxiliary Drives

Two sets of twin 'V' belt drives. Alternator and water pump together with individual drive to the vacuum pump.

Overall Engine Package

Length	976 mm (38.41") (incl SAE.4
Height	678 mm (26.7") bell housing)
Width	543 mm (21.4")
Box Volume	0.36 m^3 (12.7 ft^3)
Estimated Weight	327 kg (720 lb)

V-6 Specification

Figures 5-12, 5-14, 5-15, 5-16

Bore	90 mm (3.54")
Stroke	100 mm (3.94")
Total Cylinder Displacement	3.84 l (234 CID)
CR	19:1
bhp	96 kW (128 bhp) at 60 rev/s
bmep	9.3 Bar (135 lb/in^2) at 33.4 rev/s
power/unit piston area	0.00247 kW/mm^2 (2.15 hp/in^2)
Piston speed	12.0 m/sec 2350 ft/min

Crankcase Controlling Features

Crankshaft and Cylinder Bank Displacement

Table of Cylinder Bank Displacement and Crankshaft Configurations for a V-6 Engine

Cylinder Bank Displacement and Crank Configuration	Firing Intervals	Primary and Secondary Balance
120° simple 3 throw crank	Even	Primary balance shaft required. Two secondary balance shafts required for complete balance.
120° - 6 throw crank pins displaced 60°	Uneven	Primaries in balance. Two secondary shafts required for complete balance.
90° simple 3 throw crank	Uneven	Primaries in balance. Two secondary shafts required for complete balance.

90° - 6 throw crank pins displaced 30°	Even	One primary balance shaft required. Two secondary shafts required for complete balance.
60° - 6 throw crank pins displaced 60°	Even	Primaries in balance. Two secondary balance shafts required for complete balance.

120° bank displacement rejected due to excessive overall engine width.

90° bank angle considered with a simple 3 throw crankshaft as opposed to the 6 throw arrangement. Although uneven firing intervals result, the primary forces are in balance. Crankcase length of 425 mm (16.75") can be realised with angled split connecting rods.

60° bank angle considered with a 6 throw crankshaft, pins offset 60°. This arrangement has both even firing intervals and primary balance as shown in the above tables. Crankcase length of 507 mm (19.96") can be achieved with angled split connecting rod.

90° bank angle and simple 3 throw crank selected on its merits of minimum length and inherent primary balance.

Crankshaft pin and journal loadings based on maximum firing pressure P_{max} of 113 Bar (1650 lb/in^2).

Crankpins	455 Bar (6600 lb/in^2)	Gas only
Journals	345 Bar (5050 lb/in^2)	

<u>Connecting Rod and Piston</u>

Small end eye	640 Bar (9300 lb/in^2)	Gas only
Piston bosses	565 Bar (8250 lb/in^2)	

Angle-split connecting rod with centres of 175 mm (6.9")

$$\left(\frac{L}{r} = 3.5 \right)$$

Piston compression height controlled by requirement for oil cooling by fixed crankcase located spray nozzles.

Cylinders

Dry sleeve cylinder liners adopted from cost considerations.

Cylinder centres of 1.45 x cylinder bore controlled by the crankshaft requirements.

Camshaft

Single camshaft located within the centre of the Vee with pushrod operated valves adopted for reasons of minimum cost and overall height profile.

Tappets removed through side of crankcase.

Oil Galleries

Individual piston cooling galleries for each bank located with the crankcase side walls. Separate lubricating oil gallery, located adjacent to the camshaft, thus minimising filter requirement. (Piston cooling oil unfiltered).

Coolant Pump Location

Single water pump mounted on front face of block, transfers across to the opposite bank via external pipe at rear.

Cylinder Head Features

Cross-flow porting arrangement adopted for simplicity of turbo-charger and manifold installation. Inlets on the inside of the Vee, exhausts on the outside.

Pushrods, combustion chamber and injector located together on inside of Vee. (Due to wide cylinder centres, reasonably uncongested head of layout should result).

Fuel Pump

Distributor type fuel pump mounted within the Vee directly above the camshaft, and gear driven off the main timing gear train.

Fuel pump adjacent to injectors, hence compact fuel pipe runs.

Auxiliary Drives

Two sets of twin 'V' belt drives. Alternator and water pump together, with individual drive to vacuum pump.

Overall Engine Package

Length	731 mm (28.8")
Height	693 mm (27.3")
Width	650 mm (25.6")
Box Volume	0.33 m^3 (11.6 ft^3)
Estimated Weight	309 kg (680 lb)

In-Line 6 Cylinder with Comprex Blower

Figure 5-12

Identical concept and layout to the T/C version but for the substitution of the exhaust driven turbocharger for a twin 'V' belt driven blower.

Overall engine package box volume will be reduced marginally.

Naturally Aspirated - Direct Injection

Due to its high thermal efficiency and long life, the direct injection diesel engine is used almost universally in the heavy duty, commercial vehicle. While the operating speed range of such an engine is adequate for heavy vehicles, there are however difficulties in obtaining the wide speed range which is desirable for an engine for a light duty vehicle.

The main reason for this difficulty is to be found in the fuel/air mixing requirements which are necessary for good combustion. In the engine bore size under consideration, it is necessary to employ considerable air swirl in the cylinder. This swirl is normally generated by the appropriate design of the inlet air port but it is found that if the fuel and air flows are matched for the high engine speeds then the air swirl is insufficient at low speeds and the engine power has to be reduced at low engine speeds to avoid smoke. Conversely, if the swirl is matched at low speeds, air swirl is excessive at high speeds and smoke will result at the high engine speeds.

It may also be necessary to employ very high injection pressures at high engine speeds to avoid excessively long injection periods with the nozzle hole sizes which are required to give good combustion at low speeds.

Another difficulty with high speed direct injection engines is the high noise level which arises from the long combustion delay period as a result of which much of the fuel is in the cylinder before combustion is initiated.

For these reasons direct injection engines, despite their higher thermal efficiencies, are not employed in any high speed application, i.e. with speeds much in excess of 50 rev/s. Such a restriction in speed involves a considerable increase in the engine swept volume and hence in the bulk and weight of the engine for a given power output.

As a matter of interest, several years ago, Ricardo converted a small high speed indirect injection engine (2 l swept volume) to direct injection and carried out a limited amount of test bed and vehicle running.

(Emission measurements were only carried out over the 7-mode cycle but the direct injection engine had twice the NO_x and CO levels of the comparable indirect injection engine and much higher HC levels.)

The following point emerged from the result :-

On the test bed, the direct injection engine gave about 10% better fuel economy but with 8% less smoke limited power output. The improved fuel economy was not borne out by road tests with city driving, however, when no difference in fuel consumption could be measured. This was believed to be due to the higher torque of the indirect injection engine enabling it to be driven with high gears engaged for a longer period of operating time. A similar finding had been reported by one of Ricardo's clients with a pair of somewhat larger engines.

The direct injection engine was excessively noisy.

As would be expected, the direct injection engine was more sensitive to injection timing and required more advance over the speed range. Provided that one is not aiming for very low emission levels it is indeed not necessary to provide any speed advance for an indirect injection engine.

The major problem with direct injection is however set by the emissions targets. It is unlikely that an NO_x level of 1.5 g/mile could be achieved on production engines, even with a considerable amount of exhaust gas recirculation, and the retardation of exhaust timing which will also be necessary will give excessive hydrocarbon levels and the fuel consumption will be little if any different from an indirect injection engine of the same emission levels.

While it might be possible to use an exhaust catalyst to reduce the hydrocarbon levels, there are likely to be difficulties in developing a system with adequate catalyst activity especially under light load running when the hydrocarbon emissions will take the form of blue/ white smoke due to misfire.

Due to these problems and the severe derating which would be necessary under retard timing conditions to avoid excessive smoke, no proposals have been put forward for a naturally aspirated direct injection engine.

Boosted - Direct Injection

The use of boost will of course give a higher specific output and hence will reduce engine bulk and weight.

It will also enable the injection timing to be retarded without a heavy reduction in power since the exhaust smoke levels will be much reduced.

The turbocharged engine will have similar problems of turbocharger lag and transient smoke as the turbocharged indirect injection engine, but the latter may be treated again by means of a boost controlled maximum fuel stop. The Comprex again offers possibilities.

While it seems unlikely that a boosted direct injection engine could meet the emission targets, it is clearly desirable to include such an engine in the overall comparison of types.

The specific power output of the boosted DI has been assumed to be exactly the same as that of the boosted IDI. This has allowed the same engine capacity to be used but in the case of the DI, virtually 'square' (Ø 93 mm x 94 mm) cylinder dimensions have been selected. This choice was not affected by combustion chamber considerations but was selected simply to show the other extreme to the under-square IDI configuration.

The resultant weight reduction by adoption of a square configuration was estimated to be in the order of 18 kg (40 lb) for in-line variants and 9 kg (20 lb) for the vee engines. A noise penalty of approximately 1 dBA will be incurred with this stroke:bore ratio, when compared with a DI of the same proportions (Ø 90 mm x 100 mm) as the IDI engine. Overall predicted noise level of the bare engine is 104 dBA with a resultant predicted drive-by noise level of 82 dBA.

Estimated performance levels of this candidate are shown in Figures 5-17 and 5-18. Identical performances should be obtained from both in-line and vee configurations.

The load range consumption curves in Figure 5-18 have been constructed assuming the injection timing has been retarded 10° in an attempt to achieve low NO_x levels with a resultant fuel economy penalty of 10%. From heavy duty data it is estimated that this timing retard in conjunction with 10% EGR should result in NO_x levels in the order of 2.5 g/mile. This amount of EGR should not affect fuel economy levels.

HC levels at these retarded timings are likely to be very high and it is assumed that an efficient oxidising catalyst would be necessary in order to achieve 0.1 g/mile. Such a system is unlikely to affect fuel economy levels.

From the predicted fuel consumption curves it is estimated that vehicle fuel economies of 11-10 l/100 km (21-23 mpg) are likely to be returned during the Federal test cycle.

DESIGN NOTES

In-Line 6 Cylinder Specification	Figures :- 5 - 19
Bore	93 mm (3.66")
Stroke	94 mm (3.70")
Displacement	3.84 l (234 CID)
CR	17.5:1
bhp	96 kW (128 bhp) at 60 rev/s
bmep	9.3 Bar (135 lb/in^2) at 33.3 rev/s
power/unit piston area	0.00233 kW/mm^2 (2.03 hp/in^2)
piston speed	11.3 m/s 2230 ft/min

Crankcase Controlling Features

Crankshaft

Pins and journals based on a maximum firing pressure of 124 Bar (1800 lb/in^2).

Crankpins	450 Bar (6500 lb/in^2)	Gas only
Journals	290 Bar (4200 lb/in^2)	

Connecting Rod and Piston

Small end eye	450 Bar (6500 lb/in^2)	Gas only
Piston bosses	580 Bar (8400 lb/in^2)	

Angled split connecting rod with centres of 169mm (6.65")

$$\left(\frac{L}{r} = 3.6\right)$$

Piston height controlled by piston oil cooling requirements.

Cylinder

Press fit dry liners for engine compactness and low cost.

Cylinder centres controlled by liner and water jacket clearances and chosen at 1.25 x cylinder bore.

Camshaft

Single block mounted camshaft, with pushrod operated valves, adopted for minimum engine cost and overall height profile.

Oil Galleries

Individual lubricating and piston oil cooling galleries.

Piston cooling oil is unfiltered.

Water Circuit

Water pump discharging directly into front face of cylinder block.

Cylinder Head Features

Uni-sided port arrangement chosen for simplicity in the cylinder head casting, and ease of directing manifold pipes to and from the turbocharger.

Fuel Pump

High mounted distributor pump gear driven from camshaft giving short fuel pipe lengths.

Auxiliary Drives

One set of twin 'V' belt drives to alternator and water pump. One set of 'V' belts to vacuum pump.

Hydraulic pump mounted on front gear cover and gear driven.

Overall Engine Package

Length	939 mm - 36.95"
Height	667 mm - 26.25"
Width	543 mm - 21.375"
Box Volume	0.34 m^3 - 12 ft^3
Estimated weight	310 kg - 680 lb.

COMPREX BLOWER SYSTEM

The comprex blower was mounted on the side of the block and twin belt driven. The manifolding is simplified and gives a slimmer engine and a reduction in box volume.

The auxiliary drives were repositioned, and the position for the vacuum pump was changed to block mounted and driven from the camshaft.

V-6 Specification — Figures :- 5-19 and 5-20

Bore	93 mm (3.66")
Stroke	94 mm (3.70")
Displacement	3.84 l (234 CID)
CR	17.5:1
bhp	96 kW (128 bhp) at 60 rev/s
bmep	9.3 Bar (135 lb/in^2) at 33.3 rev/s
Power/unit piston area	0.00233 kW/mm^2 (2.03 hp/in^2)
Piston speed	11.3 m/s (2230 ft/min)

Crankshaft Controlling Features

Crankshaft

Pins and journals on a maximum firing pressure of 124 Bar (1800 lb/in^2).

Crankpins	460 Bar (6700 lb/in^2)	Gas only
Journals	325 Bar (4700 lb/in^2)	

Balancing requirements as stated for V-6 Comet engine

Connecting Rod and Piston

Small end eye	700 Bar (10,200 lb/in^2)	Gas only
Piston bosses	580 Bar (8,400 lb/in^2)	

Angle cut split connecting rod with centres of 174 mm (6.86")

$$\left(\frac{L}{r} = 3.7 \right)$$

Piston height controlled by piston oil cooling arrangements.

Cylinders

Press fit dry liners for engine compactness and low cost.

Cylinder centres controlled by bearing requirements and arrived at 1.46 x cylinder bore.

Camshaft

Central camshaft, operating valves via push rods.

Single camshaft chosen for minimum width of engine.

Water Circuit

Water pump on front face of block, discharging coolant through both banks of crankcase and to cylinder heads through transfer pipes.

Cylinder Head

As the engine has wide cylinder centres (1.46:1) a cross flow ported engine was chosen.

This gives much easier manifolding to and from the turbocharger.

Fuel Pump

Centrally mounted pump, gear driven from camshaft. Inboard injectors give small fuel pipe lengths.

Auxiliary Drives

Internal gear drive used for long life and versatility. 'V' belt drives to alternator, vacuum pump, and water pump. Gear driven hydraulic pump.

Overall Engine Package

Length	708 mm - 27.87"
Height	654 mm - 25.75"
Width	674 mm - 26.50"
Box Volume	0.31 m^3 - 11 ft^3
Estimated weight	300 kg - 660 lb.

... ...

Comprex blowers were not deemed a viable proposition due to complexity of manifold pipes to and from the blower.

Loop Scavenged, Two Cycle, Indirect Injection

While it is difficult to obtain a reasonable performance and fuel economy with a two cycle indirect injection engine, the lower NO_x emissions with indirect injection make it desirable to assess the possibilities.

An engine of this type was manufactured for a short period by the Turner Manufacturing Company in the 1950's (689) and the published performance data from this engine has been taken as the basis for prediction.

The resulting engine has six cylinder and a bore of 99 mm (3.89"), a stroke of 114 mm (4.50") and runs to 45 rev/s. This gives a high value of 4450 mm rev/s (10500 in. rpm) for the bore and speed parameters which control breathing on a two cycle engine and therefore gives a penalty in fuel economy. While it would have been possible to reduce the parameter by employing eight cylinders of 85 mm (3.36"), the very wide scavenge port belts necessary with loop scavenging give such wide cylinder spacing that the engine would have been excessively large and heavy although of Vee form.

It is difficult to predict the emission levels of this power unit. Due to the poor fuel economy and the need therefore to burn more fuel the levels could be higher than for an equivalent four cycle engine. It has been assumed however that the NO_x primary target can be met but there is no guarantee of this. Hydrocarbon levels will almost certainly give problems.

Estimated vehicle fuel consumption levels during CVS-CH are 13-11.5 l/100 km (18-20 mpg).

Predicted noise levels are impossible to quantify with any degree of confidence but it is estimated that combustion noise levels from this engine under Californian drive-by conditions will be around 75 dBA.

The arrangement drawing of the engine is shown in Figure 5-22. The effect of the wide cylinder spacing on engine length is clearly shown and in Figure 5-21 the performance curves show the rather poor fuel economy to be expected.

DESIGN NOTES

V-6 Specification

Figures :- 5-22 and 5-23

Bore	99 mm (3.89")
Stroke	114 mm (4.50")
Engine Displacement	5.26 l (321 CID)
CR	19:1
bhp	96 kW (128 bhp)
bmep	4.7 Bar (68 lb/in^2) at 33.3 rev/s
power/unit piston area	.00207 kW/mm^2 (1.82 hp/in^2)
Piston speed	10.2 m/s (2000 ft/min)

Crankcase Controlling Features

Crankshaft

Pin and journal loadings based on maximum firing pressure of 110 Bar (1600 lb/in^2).

Crankpin	470 Bar (6800 lb/in^2)	Gas only
Journals	307 Bar (4450 lb/in^2)	

For crankshaft configuration and pin offset Table 1 (next page) has been assembled.

From the results a 90° 'V' engine with a 30° crankpin offset was chosen. A 120° 'V' engine is too wide for serious consideration, and a 60° 'V' is too tall.

Scheme Fig.37 shows the crankshaft layout with flying webs between adjacent pins.

Connecting Rod and Pistons

Small end eye	745 Bar (10,800 lb/in^2)
Piston bosses	515 Bar (7,500 lb/in^2)

Angle split connecting rod with centres of 228 mm (8.96").

$$\left(\frac{L}{r} = 4\right)$$

This high $\frac{L}{r}$ ratio is caused by piston skirt and the porting of inlet and exhaust gases. Another effect on this ratio is the angle split connecting rod.

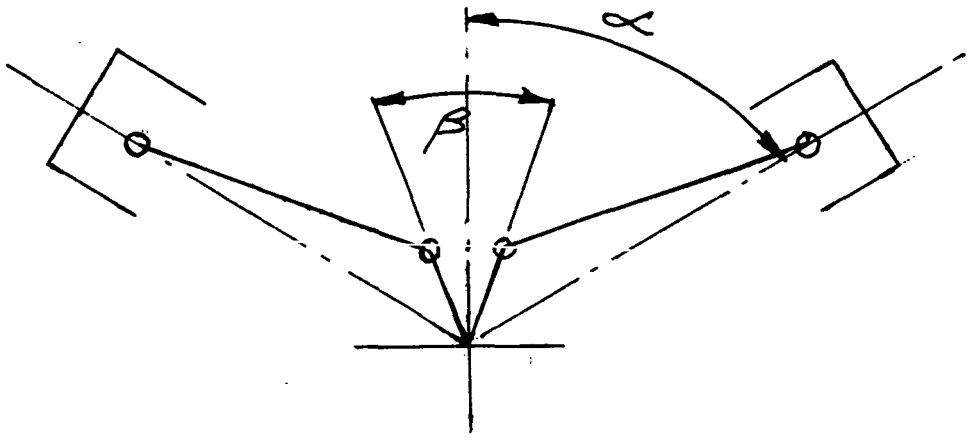

2α	β	Firing	Residual Primary Couple
120	60	60-60-60	0
90	0	90-30-90	0
75	0	75-45-75	0.53 vert.
* 90	30	60-60-60	0.53 vert.
75	15	60-60-60	0.77 vert.
90	20	70-50-70	0.35 vert.
90	15	75-45-75	0.27 vert.

* This configuration gives even firing and primary couple of low magnitude that should be removable through correct positioning of flexible mountings.

Cylinder

Thick walled, press fit dry liners for compactness.

Cylinder centres fixed at 1.7 x bore due to porting through sides of adjacent barrels. (In-line version of this engine was rejected for the reason of excessive engine length).

Oil galleries

Individual lubricating oil and piston cooling oil galleries. Piston cooling oil is unfiltered.

Water Circuit

Water pump on front face of block, discharging coolant through both banks of crankcase and to cylinder heads through transfer pipes.

Cylinder Head Features

Due to large cylinder centres no inlet or exhaust ports; simple individual head was adopted.

Pre-combustion chamber is therefore centrally mounted.

Manifolding

The Rootes type blower is centrally mounted inside the 'V' and gear driven from the crankshaft through idler gears.

An inlet manifold casting is attached to both banks of the 'V' and connected directly to the blower.

Exhaust manifolding is a simple conventional cast iron pipe.

Fuel Pump

The distributor fuel pump is driven through the Rootes type blower, and the high position allows small fuel pipe lengths.

Auxiliary Drives

Two sets of 'V' belt drives. Alternator and water pump together with an individual drive to the vacuum pump. Hydraulic pump is gear driven.

Overall Engine Package

Length	803 mm (31.60")
Height	692 mm (27.25")
Width	648 mm (25.5")
Box Volume	0.359 m^3 (12.7 ft^3)
Estimated weight	340 kg (760 lb).

Uniflow Scavenged Two Cycle Direct Injection

The considerable success of the General Motors series of truck engines of this type suggests that it is a suitable candidate for study.

For good fuel economy, it is desirable to keep the product of speed and bore size to a modest value and a similar value to that used on the GM 71 series engines was adopted. A value of 10.2 m/s. (2000 ft/min) was chosen for the piston speed.

While there are difficulties in running fuel injection equipment at engine speed on two cycle engines, the running speed of 45 rev/s on this size of engine should not give rise to difficulties but a pump injector system could be used as an alternative.

A direct injection combustion system was chosen due to the known difficulties of using indirect injection on a two cycle engine and still obtaining an acceptable fuel consumption. Ricardo do not believe however that it will be possible to meet the primary NO_x target and the hydrocarbon levels are also in doubt.

As with the loop scavenge engine, the low rated speed of this engine along with modest bmep levels results in this engine being heavy and because of the higher torque levels necessary to obtain the target power at this speed, a heavier transmission may be needed.

Predicted noise level of this engine under drive-by conditions at a distance of 15.24 m (50 ft) is likely to be 75 dBA.

A fuel consumption of about 12.5 - 11.5 l/100 km (19-21 mpg) under CVS-CH test conditions is predicted assuming optimum performance conditions. There is insufficient data to enable Ricardo to predict any performance parameters for this engine in low emissions build.

The comparative arrangement drawings for In-line and V-6 cylinder versions of an engine of 83 mm (3.28") bore and 114 mm (4.5") stroke are given in Figure 5-25 with comparative performance data in Figure 5-24.

DESIGN NOTES

In Line 6 Specification

Figures :- 5-25 and 5-26

Bore	83 mm (3.28")
Stroke	114 mm (4.50")
Cylinder displacement	3.74 l (228 CID)
CR	17:1
bhp	96 kW (128 bhp) at 45 rev/s
bmep	6.9 Bar (100 lb/in^2) at 33.3 rev/s
power/unit piston area	0.0029 kW/mm^2 (2.52 hp/in^2)
Piston speed	10.2 m/s (2000 ft/min)

Crankcase Controlling Features

Crankshaft

Crankshaft pin and journal loadings based on maximum firing pressure P_{max} of 138 Bar (2000 lb/in^2).

Crankpin	451 Bar (6550 lb/in^2)
Journal	342 Bar (4970 lb/in^2)

Connecting Rod and Piston

Small end eye	760 Bar (11,000 lb/in^2)
Piston bosses	570 Bar (8,300 lb/in^2)

Angle split connecting rod and cap with centres 254 mm (10")

$$\left(\frac{L}{r} = 4.48\right)$$

Piston compression height controlled by requirement for oil cooling from fixed crankcase located spray nozzles.

Cylinders

Thick dry sleeve cylinder liners adopted for minimum cost.

Cylinder centre of 1.3 x cylinder bore controlled by water jacket and air belt between adjacent cylinders.

Camshaft

Single crankcase located shaft with pushrod operated exhaust valves adopted for minimum engine cost and overall height profile.

Tappets removed through top face of block i.e. head must firstly be removed from the block.

Oil Galleries

Individual lubricating oil and piston cooling oil galleries (piston oil unfiltered, hence smaller filter requirement).

Coolant Pump Location

Located on front face of block, discharging directly into the crankcase water jacket.

Blower and Fuel Pump

Rootes type blower mounted on the front gear casing and gear driven from the camshaft. Blower air is directed through the crankcase into the middle ducting around the cylinder.

The fuel pump is driven through the blower.

The exhaust manifold is a simple cast iron 'Rake' casting.

Cylinder Head Features

The cylinder head is simplified by only containing the exhaust porting and injector bosses. Due to cylinder centres of 1.3 x bore a one piece head was chosen.

Auxiliary Drives

Two sets on twin 'V' belts. Alternator and water pump together, with individual drive to the vacuum pump. Hydraulic pump is directly mounted on gear casing and gear driven.

Overall Engine Package

Length	946 mm (37.25")
Height	874 mm (34.38")
Width	575 mm (22.63")
Box Volume	0.47 m^3 (16.77 ft^3)
Estimated Weight	365 kg (800 lb)

V-6 Specification — Figures :- 5-25 and 5-27

Bore	83 mm (3.28")
Stroke	114 mm (4.50")
Engine Displacement	3.74 l (228 CID)
CR	17:1
bhp	96 kW (128 bhp) at 45 rev/s
bmep	6.9 Bar (100 lb/in^2) at 33.3 rev/s
power/unit piston area	.0029 kW/mm^2 (2.52 hp/in^2)
Piston speed	10.2 m/sec. (2000 ft/min.)

Crankshaft Controlling Features

Crankshaft

Pin and journal loadings based on a maximum firing pressure of 138 Bar (2000 lb/in^2).

Crankpin	448 Bar (6500 lb/in^2)
Journals	290 Bar (4200 lb/in^2)

For crankshaft configuration see table prepared for the loop scavenged 2-stroke V-6 engine.

For this engine application with the possibility of a shorter engine casing with cylinder centres of 1.6 x bore, a 90° 'V' bank angle with uneven firing but with the advantage of no vertical primary couples was selected.

(The cylinder centre ratio is lowered when compared to the loop scavenged engine, by the removal of exhaust gas ducting from the crankcase to cylinder head).

Connecting Rod and Piston

Small end eye	760 Bar (11,000 lb/in^2)	Gas only
Piston bosses	570 Bar (8300 lb/in^2)	

Angle split rod, with centres of 254 mm (10") ($\frac{L}{r}$ = 4.48). This high $\frac{L}{r}$ ratio is caused by porting of the inlet gases, piston skirt, angled split rod and small diameter bore.

Piston height controlled by oil cooling requirements.

Cylinders

Thick walled, press fit dry liners for compactness.

Cylinder centres fixed at 1.6 x bore, controlled by bearing requirements and porting of inlet gases, through cylinder block around barrels.

Camshaft

Single shaft centrally crankcase mounted with push rod operated exhaust valves.

Oil Galleries

Individual lubricating oil and piston cooling oil galleries.
Piston cooling is unfiltered.

Water circuit

Water pump mounted on front face of block, discharging coolant directly through both banks of crankcase and to cylinder heads through transfer pipes.

Cylinder Head Features

Due to large cylinder centres and with only the exhaust porting in the casting, a simple individual head was chosen.

Auxiliary Drives

Two sets of 'V' belt drives. Alternator and water pump together with an individual drive to the vacuum pump. Hydraulic pump is gear driven.

Internal gear drive was chosen for long life and versatility.

Overall Engine Package

Length	704 mm (27.7")
Height	685 mm (27.0")
Width	768 mm (30.2")
Box Volume	0.387 m^3 (13.66 ft^3)
Estimated Weight	354 kg (780 lb)

UNCONVENTIONAL ENGINES

Compound Direct Injection Engine

Compounding of diesel engines for the attainment of improved power/weight ratios and thermal efficiency implies the use of air compressors and exhaust driven turbines with different drive arrangements between the three components. In the ultimate form the diesel engine is used solely to produce high temperature, high pressure gas for use in the gas turbine which forms the power unit - this arrangement is generally termed a gas generator.

The possible operational variables which can affect the overall performance and efficiency in varying degrees are very numerous and the prediction of performance to include the effect of these variables is very complex.

The main variables are listed below :-

Engine type - 4 stroke
2 stroke (valve in head, loop scavenged-opposed piston)
Engine compression ratio
Boost pressure
Cylinder pressure limits
Air fuel ratio
Valve timing
Turbine efficiency
Compressor efficiency
Use of charge cooler - charge cooler efficiency
Engine /turbo components drive arrangement
Thermal loading limitations
Bore/stroke ratio

Although there is a fairly extensive literature study of the subject, the little practical experience that exists is concerned with large engines for which this configuration is most suited. The performance predictions are also concerned with large engines and are mostly confined to maximum output conditions without consideration for part load operation.

In order to arrive at fairly broad estimates for the performance of a small engine, the available information has been used and modified where possible to take account of the scaling down of the components.

Engine Configuration

The simplest form of compound engine is that in which the output is taken from the diesel engine with the turbo-compressor unit geared to the crankshaft. The gearing has to cope only with the difference in power between the compressor and the turbine, and there is no requirement for power equilibrium between these components such as exist in normal turbocharging.

With a gas generator system all the power output is taken from the turbine through reduction gearing. For the relatively low power requirements of the engine under study the small turbine would have a very high rotational speed. Although this arrangement has the theoretical advantage of a high-low speed torque compared with the compound engine, it is not considered to be feasible for the present application in view of these high rotational speeds and the unknown performance of small turbines at high expansion ratios.

Engine Type

From the available data a 2-stroke engine is seen to offer the best thermodynamic performance and power/weight ratio with an opposed piston type being superior to the valve in head form. It also permits greater control over the division of power between the diesel engine and the turbine compared with a 4-stroke engine. However, although the 2-stroke engine is basically simpler it is considered that the 4-stroke might be preferred since it has much lower thermal stresses and piston heat flow and has greater volume of experience behind its development.

Estimated Performance

The values tabulated below have been derived from data predicted for large engines with the following assumptions :-

Boost ratio 4:1 - Inlet pressure 4.12 Bar (60 lb/in^2 abs)
Charge cooler effectiveness 80%
Charge cooling water temperature 85°C
Compressor efficiency 74%
Turbine efficiency 82%
Cylinder pressure limit 207 Bar (3000 lb/in^2)

The final column shows the engine swept volume for 96 kW (128 bhp) at an engine speed of 50 rev/s.

Charge cooled	bmep Bar	bmep lb/in^2	Thermal Efficiency *	Displacement (litres)
2-stroke gas generator	19.3	280	.29	1.0
2-stroke compound	22.4	325	.35	0.85
4-stroke gas generator	24.2	350	.34	1.57
4-stroke compound	27.6	400	.39	1.38
Uncooled				
2-stroke gas generator	17.2	250	.32	1.1
2-stroke compound	19.0	275	.3	1.0
4-stroke gas generator	18.3	265	.36	2.08
4-stroke compound	20.7	300	.41	1.63

* Based on fuel energy.

It is pointed out that these figures must be regarded as approximate and are intended to show the order of magnitude only and the relative position of the different operating conditions.

Specific output can be increased significantly with increasing manifold pressure but will be accompanied by higher thermal and mechanical stresses. It is for this reason that a pressure ratio of 4:1 has been chosen in the above table.

From this table it is seen that an engine capacity of 1.0 - 2.0 litres would be required to produce 96 kW (128 bhp) at 50 rev/s depending on the operating conditions. There are a number of factors to be taken into account however in the application of this data to a small engine.

Firstly, the smallest cylinder size dealt with in the preparation of these results was 2.8 litres (170 in^3), involving a scaling down of about 1/5. This will obviously have some direct adverse effect on the engine performance but the most serious problem would be associated with the compressor and turbine. The dimensions of these would be very small to match the low gas flows and would have high rotational speeds. It is difficult to estimate the efficiencies of these components at high pressure ratios but they would be lower than those used in the predicted performance and would therefore lead to some increase in engine size. This problem could be alleviated by the use of two stage operation but this would add to the complexity and bulk of the power unit. For the sake of simplicity it would be preferable to dispense with charge cooling in automotive applications - this also results in an increase in engine size but has the benefit of increased thermal efficiency. The maximum cylinder pressure of 20.7 Bar (3000 lb/in^2) used in the predicted performance is very high. If this is reduced to a more reasonable level of 13.8 Bar (2000 lb/in^2) by a reduction in pressure ratio, the performance will be penalised by possibly 20%.

Alternatively, it could be lowered by retarding the injection timing which would depress the engine performance , but part of this loss would be recovered in the turbine due to the increase in exhaust temperature. This method would also be beneficial from the point of view of NO_x exhaust emissions. It is probable that from the above considerations the engine size would be increased by 25 - 30% above those quoted in the table.

Choice of Engine Configuration

Assuming that a 4-stroke engine would be preferred on account of lower thermal and mechanical stresses and superior thermal efficiency, and that it would be non-cooled to reduce complexity and bulk, the choice remains between a gas generator and a compound arrangement. The engine swept volumes would be about 2.6 and 2.0 litres respectively, both of which fall in the range of large production naturally aspirated diesel engines. With a bore/stroke ratio of 1:1 the corresponding bore sizes are 94 mm and 86 mm and piston speeds at 50 rev/s of 9.4 and 8.6 m/s. Although the compound engine is smaller and requires a lighter gear connection to the engine crankshaft, it has poor low speed performance and would therefore require a more complex transmission. It is the question of part load behaviour that poses the greatest difficulty in prediction owing to the interaction between the three main components, and the lack of a suitable computer program.

Emissions

The behaviour of the compound engine from the point of view of exhaust emissions is also difficult to predict. Exhaust smoke should not be a problem as it should be possible to operate at an air :fuel ratio giving low smoke values e.g. 25:1, although low speed, low load boost characteristics will tend to cause some smoke.

The high combustion temperatures will produce high NO_x levels but these could be reduced with charge cooling. On the other hand, this would have an adverse effect on HC as would the low compression ratios essential with high intake pressures, particularly at light load. These features can only be established by actual engine measurements.

Conclusions

The general conclusions are that a 4-stroke diesel engine of about 2½ litres would be required to produce 96 kW (128 bhp) at 50 rev/s. Although there is a vast amount of experience with diesel engines of this size with natural aspiration, extensive development would be required to produce a robust enough engine configuration and to establish the performance of high speed small turbo-units. It is considered that the complexity and durability of the high reduction gearing would present a major disadvantage and expense.

Starting and light load hydrocarbons will undoubtedly be a problem and ignition assistance may be necessary at idling and light load as well as when starting.

Figure 5-29 gives the arrangement drawings for a four cylinder engine of 93 mm (3.66 inch) bore and stroke, running at 50 rev/s. The good fuel economy but poor torque curve shape are clear from the performance data in Figure 5-28.

It should perhaps be stated that in a limited study of this kind, it is not possible to optimise the design for all variants of compound engine as it would be possible to design for lower boost ratios. This would improve the torque curve shape, help starting and idling, and possibly reduce NO_x levels but at the expense of a bulkier and heavier engine with a worsening of fuel economy.

DESIGN NOTES

In-Line 4 Cylinder Specification

Figures :- 5-29 and 5-30

Bore	93 mm (3.66")
Stroke	93 mm (3.66")
Cylinder Displacement	2.54 litre (154 CID)
CR	13:1
bhp	96 kW (128 bhp) at 50 rev/s
power/unit piston area	0.00346 kW/mm^2 (3.05 hp/in^2)
Piston speed	9.3 m/sec (1820 ft/min)

Turbine Specification

Wheel tip diameter	63 mm (2.48")
Wheel tip length	6.5 mm (0.256")
Exducer diameter	48 mm (1.89")
Speed	2220 rev/s at engine rated speec

Compressor Specification

Wheel tip diameter	68 mm (2.68")
Pressure ratio	4:1
Speed	2220 rev/s at engine rated speec

Crankshaft Controlling Features

Crankshaft

Crankshaft pin and journal loadings based on maximum firing pressure P_{max} of 138 bar (2000 lb/in^2)

Crankpins	460 Bar (6550 lb/in^2)	Gas only
Journals	342 Bar (4960 lb/in^2)	

Connecting Rod and Piston

Small end eye	700 Bar (10,000 lb/in^2)	Gas onl
Piston bosses	584 Bar (8,300 lb/in^2)	

Angle split connecting rod and cap with centres 175 mm (6.9")

$$\left(\frac{L}{r} = 3.75\right)$$

Piston compression height controlled by requirements for oil cooling from fixed crankcase located spray nozzle.

Cylinders

Dry sleeve cylinder liners for overall engine compactness and minimum cost.

Cylinder centres of 1.23 x cylinder bore controlled by coolant jacket requirement between adjacent cylinders.

Camshaft

Single crankcase located shaft with pushrod operated valves adopted for minimum engine cost and overall height profile.

Tappets removed through side of crankcase.

Oil Galleries

Individual lubricating oil and piston cooling oil galleries (piston cooling oil unfiltered, hence smaller filter requirement).

Coolant Pump Location

Located on front face of the block discharging directly into the block water jacket.

Fuel Pump

High mounted distributor type fuel pump gear driven off the main timing gear train located at the front of the engine.

Cylinder Head Features

Uni-sided port layout adopted for casting simplicity and manifold compactness, turbine on same side.

Pushrod and injector positioned together on opposite side to the ports, and same side as fuel pump, hence compact fuel pipe runs to injectors.

Turbine Drive

Gear train located at flywheel end of engine.

Crankshaft located driving gear, driven through the flywheel via 'cush drive' clutch mechanism.

Gear	Speed (rev/s)	Pitch Line Velocity
Crankshaft driving	50	47 m/s (154 ft/s)
Compound Set - Engine side	300	47 m/s (154 ft/s)
Turbine side	300	189 m/s (620 ft/s)
1st Idler	1200	189 m/s (620 ft/s)
2nd Idler	1200	189 m/s (620 ft/s)
Turbine driven	2220	189 m/s (620 ft/s)

Note :- Two idlers necessary to mount the turbine outside the flywheel profile.

Turbine Location

Separate gear train casing mounted between engine block and flywheel housing. Turbine housing bolted onto rear face of casing and compressor housing to the front, thus resulting in a compact exhaust and inlet manifold arrangement.

Auxiliary Drives

Two sets of twin 'V' belt drives. Alternator and water pump together with individual drive to vacuum pump.

Overall Engine Package

Length	802 mm (31.58")	(incl. SAE 4 flywheel housing)
Height	685 mm (26.96")	
Width	584 mm (23")	
Box Volume	0.32 m^3 (11.3 ft^3)	
Estimated weight	305 kg (670 lb)	

Rotary (Wankel) Engine

With the considerable interest in the rotary gasoline engine over the past fifteen years or so, a somewhat smaller interest has been displayed in the rotary diesel engine. One company, Rolls Royce, have gone quite a long way but have now abandoned their efforts as they do not believe that a commercially attractive engine can be produced. Due to the difficult combustion chamber shape at diesel compression ratios, the only engines that have run reasonably successfully have used two stage compression.

The engine tested by Rolls Royce had a larger 'diameter' first stage than second but the design schemed for this report has equal 'diameters' with longer first stage rotors to give a lower package height.

There must, in view of the experience of all who have worked in this field, be grave doubts on the ultimate success of developing a rotary diesel engine. Fuel consumption, hydrocarbon and carbon monoxide emissions, smoke and durability must all have a question mark over them unless there be a breakthrough in further developments.

Geometric Limitations - Operating Cycle

The 2.3* or 4 stroke geometry is undoubtedly the most attractive form for diesel operation. The only alternative would be the 1.2 or 2 stroke form, which, whilst giving scope for much higher compression ratios, has insufficient space within the rotor to accommodate an adequate bearing.

Compression Ratio

In order to achieve acceptable cold starting and light load operation the diesel engine must operate with a high compression ratio; in the range 18-22:1 depending upon the combustion system used in the type of application under consideration.

The 2.3* Wankel mechanism with no combustion chamber in either trochoid or rotor can reach a ratio of about 25:1 with a K ratio $\left(\frac{\text{generating radius}}{\text{eccentric radius}}\right)$ of around 14-15. However, as the K ratio increases and eccentric radius is reduced, the diameters of the phasing gears are reduced in order to maintain a 1.5:1 ratio and this limits the diameters of the main and rotor bearings. Consequently a K ratio greater than 10 would not be acceptable for a diesel engine from the point of view of bearing loads. This limits the theoretical maximum compression ratio to 21:1 without any combustion chamber.

(* 2.3 refers to number of trochoid lobes and number of rotor faces).

Combustion Volume

Whether direct or indirect combustion systems are used, piston engine experience has shown that the volume outside of the actual chamber must be kept to a minimum. In the case of small piston engines, about 25% of the clearance volume is in unavoidable clearances. To maintain this situation in the rotary engine would mean accepting a compression ratio of about 5:1. Clearly a compromise must be accepted in which a reasonable compression ratio can be achieved with a minimum of dead space in the combustion system. Since the compression ratio is going to be well below that normally used in high speed diesel engines it will be necessary to utilise two-stage compression and expansion.

As a starting point one might select a first stage compression ratio of 2:1 and second stage of, say, 10.5:1. This will mean that at IDC 50% of the total clearance volume will be in the dead volumes. Again to achieve piston engine conditions a 4:1 first stage and 5.25:1 second stage would be required.

Combustion Chamber Type

The choice here is between direct injection (DI) or indirect injection (IDI). It is known that in the DI chambers, air swirl is essential to give good combustion when wall impingement occurs. Attempts to use DI chambers in rotary diesel engines have failed because it is quite impossible to generate adequate air motion in the Wankel rotary engine (unpublished Ricardo experience).

It is therefore concluded that the combustion system must be of IDI type. Although the rotary engine may have special requirements as regards chamber geometry, at this stage, we can only predict combustion performance from well tried systems such as the Ricardo Comet on piston engines. IDI systems such as the Comet depend for their mixing gas motion on having the bulk of the clearance volume divided into two by a throat or orifice through which the air is compressed and combustion gases are expanded. The proportions in the prechamber and main volume over the piston are fairly critical to performance and should ideally be a 50/50 distribution for the Comet. For prechamber systems such as Caterpillar, the prechamber volume can be only 25% of the total.

Clearly there must be some dpearture from this ideal because with the selected compression ratios there is already 40% of the clearance volume over the rotor before any chamber volume is incorporated in the rotor similar to those normally present in the piston crown of conventional engines. At the very least a channel must be provided in the rotor face to allow gas transfer from trailing to leading volumes at TDC.

Piston engine experience shows some fall off in air utilisation at a volume proportion of 40-60, i.e. 40% in the prechamber, at 20% in the prechamber the loss of air utilisation is about 33% and the loss of brake performance about 40%. Presumably the precombustion chamber will suffer loss in this way although no data is available. This is the area for maximum growth and where maximum development should be applied to the diesel rotary engine. We will assume that some improvement is possible and say at this stage that due to loss of air utilisation in the Wankel engine the indicated performance will be down by 20% on the piston engine.

We must consider the relative motoring losses of the rotary and piston engines. Compared on the basis of Wankel rotational speed = 1.5 x piston engine rotational speed, there would appear to be an increase of some .75 bar mep in the case of the Wankel engine. This difference probably contains increases in heat, mechanical and pumping losses resulting from the 2 stage arrangement and which are difficult to separate.

Taking a typical small automotive IDI performance and making allowance for the above two differences, the performance is predicted as in Figure 5-31, and to achieve the required power the engine will have two high and two low pressure stages. The swept volume of the low pressure stages will be 5.35 litre (326 in^3) per lobe. The engine will give two working strokes per revolution of the eccentric shafts and with an output shaft reduced in the ratio to 3:2 the working cycle frequency will be as for a 6 cylinder in-line engine. Top eccentric speed will be 100 rev/s and output shaft 66.7 rev/s.

The fuel pump repetition rate of 100 rev/s is too high for one element. Therefore each injector will be fed by two lines of a modified 4 cylinder pump siamesed together within the pump.

The layout in Figures 5-32, 5-33 and 5-34 is suggested having a length of about 752mm(29.6"), width of 679mm (26.7") and height about 508 mm (20") without auxiliaries. There are ample take-off points for driving auxiliaries, the alternator could be contained within the engine envelope being on the other end to the fuel pump.

Low Heat Loss ('Adiabatic') Engine

Preliminary calculations were carried out to assess the likely improvement in fuel economy which would result from large reductions in the heat transferred from the charge during the working cycle.

Cycle calculations were carried out using a simplified engine performance simulation program in which heat is fed into the cycle by means of an assumed heat release diagram shape. It was assumed that the heat release diagram shape was unaffected by the reduction in the heat loss which was simulated by increasing the assumed temperatures of the combustion chamber walls.

While the results are not of a high order of accuracy, they are believed to give a reasonable picture as to likely trends. Reducing the heat transfer during the power stroke by 70% gives a reduction in fuel consumption of only 4.5% with a resulting increase in maximum cycle temperature from 1460°C to 1510°C (2658°F to 2788°F) and an increase of exhaust release temperature from 600°C to 705°C (1113°F to 1300°F).

These calculations assume that the volumetric efficiency is unchanged which is likely to be an optimistic assumption and any reduction in this will of course increase the fuel consumption due to a lowering of mechanical efficiency. The increase in exhaust temperature may lead to problems with exhaust valves but on the other hand, this increase could lead to an increase in power recovery in a compound engine.

NO_x emissions are likely to be increased, perhaps dramatically, due to the strong temperature dependence of NO_x formation at these levels but hydrocarbon levels should be reduced.

Provided that some practical method of reducing heat losses can be developed, the 'Adiabatic' principle could be applied to most of the engines under consideration; on the other hand, for the reasons given in the preceding paragraphs, the overall result may not be too attractive and no further analytical studies have been made at this time.

Low Ratio, Ignition Assisted Diesel

There has been a considerable interest in recent years in the possibility of developing a low compression ratio diesel engine. The interest has been initiated by, amongst others, the following considerations :-

1. For reasons of acceptable cold starting and the prevention of high speed light load misfire and blue smoke after a cold start, the compression ratio of current high speed diesel engines is appreciably higher than the compression ratio for optimum efficiency. A reduction in ratio would therefore give an improved fuel consumption.

2. A reduction in peak cycle pressures could give a reduction in engine scantlings and hence of weight and cost.

3. Reduction in peak cycle temperatures should give reduction in NO_x emissions.

While there is sone doubt as to the validity of the second and third of these arguments, it would undoubtedly be of interest to run such an engine to examine its performance and potential.

The major difficulty of such a test arises from the difficulty of guaranteeing reliable and consistent ignition and it is useful to consider the alternatives:-

1. Heater plugs as presently used for a starting aid would have an unacceptably high power consumption even if they did give consistent ignition. For cold starting, additional aids would also be necessary.

2. Inlet air manifold heaters would have a similar power loss if electrically heated and even if fuel heated, would give an unacceptable increase in fuel consumption, especially at light load when the need for an ignition aid will be at its greatest.

3. Spark ignition must be the most attractive aid due to its low power consumption. The use of a high energy surface discharge plug may be necessary however and a repetitive spark system of the kind used in the TCCS system may be essential. Even with this, there is no guarantee that consistent and regular firing will result and high hydrocarbon levels due to misfire may prove insuperable.

4. Exhaust gas recycle to heat the cylinder charge under light load conditions could possibly be developed as an effective ignition aid but Ricardo are already concerned about the effect of high EGR flow rates on lubricating oil and engine durability when it is applied at high loads. Increasing the range during which this is used may aggravate this potential problem.

5. The use of exhaust back pressure to eliminate blue smoke problems (by increasing cylinder temperatures) is known to be effective in conventional diesel engines and would undoubtedly be effective in improving ignition conditions in a low ratio engine. However, as in the case of inlet manifold heaters it works by increasing the amount of fuel being burnt and like intake charge heating is in direct opposition to a high economy prime mover.

6. Charge air heating by means of the hot exhaust gas could possibly be employed once the system has warmed up but will not provide a solution to high hydrocarbon levels due to misfire on start up.

7. Variable compression ratio pistons would limit cylinder pressures, but can only be applied to quiescent direct injection combustion systems, would not give improved economy at light load, are expensive and it is difficult to arrange piston cooling for high ratings.

In view of these difficulties it was thought that a low ratio, ignition assisted diesel engine was not a proved and practical proposition at this time but it is suggested that for experimental purposes it would be worth attempting to find a solution of the ignition problem in order that the future potential might be investigated.

		V8 Gaso-line	IL6 Gaso-line	V8 NA IDI	V6 TC IDI	In Line 6 TC IDI	V6 TC DI	In Line 6 TC DI	V6 2 Stroke Loop IDI	In Line 6 2 Stroke Uniflow DI	4 Cyl. Compound DI	2 Rotor 2 Stage Rotary
Bore	mm	97	88	88	90	90	93	93	99	83	93	-
	in	3.82	3.46	3.46	3.54	3.54	3.66	3.66	3.89	3.28	3.66	-
Stroke	mm	76	82	98	100	100	94	94	114	114	93	-
	in	3.00	3.22	3.86	3.94	3.94	3.70	3.70	4.50	4.50	3.66	-
Power	kW	96	96	96	96	96	96	96	96	96	96	96
	hp	128	128	128	128	128	128	128	128	128	128	128
Swept Volume	litre	4.5	2.99	4.78	3.84	3.84	3.84	3.84	5.25	3.74	2.52	-
	in^3	275	183	292	234	234	234	234	320	228	153	-
Weight	kg	250	186	320	309	327	300	310	340	365	305	227
	lb	550	410	700	680	720	660	680	760	800	670	500
Box Volume	m^3	-	-	0.32	0.33	0.36	0.31	0.34	0.36	0.47	0.32	0.26
	ft^3	-	-	11.2	11.6	12.7	11.0	12.0	12.7	16.8	11.3	9.2
Specific power-swept volume	kW/l	21.3	32.11	20.2	24.4	24.4	24.4	24.4	18.3	26.0	38.0	-
	hp/in^3	0.47	0.70	0.44	0.55	0.55	0.55	0.55	0.40	0.57	0.83	-
Power/unit piston area	kW/mm^2	-	-	0.0020	0.0025	0.0025	0.0023	0.0023	0.0021	0.0029	0.0035	-
	hp/in^2	-	-	1.70	2.15	2.15	2.03	2.03	1.82	2.52	3.04	-
Specific power-box volume	kW/m^3	-	-	302	291	265	306	280	265	201	299	368
	hp/ft^3	-	-	11.4	11.05	10.1	11.6	10.7	10.1	3.0	11.3	13.9
Specific weight - swept volume	kg/l	55.6	60.2	66.9	80.9	85.6	78.5	80.7	65.7	98.4	120.6	-
	lb/in^3	2.00	2.19	2.41	2.91	3.08	2.83	2.91	2.37	3.55	4.34	-
Specific weight - power	kg/kW	2.60	1.87	3.31	3.22	3.41	3.12	3.22	3.59	3.78	3.17	2.36
	lb/hp	4.30	3.12	5.47	5.31	5.62	5.16	5.31	5.93	6.25	5.23	3.91

SUMMARY TABLE OF MAJOR CHARACTERISTICS OF

POWERPLANTS CONSIDERED IN ENGINE CONFIGURATION STUDY

CVS-CH Fuel Consumption and Emissions Estimation

For rating purposes it was necessary to estimate the expected emission levels and fuel consumptions when the target vehicle, fitted with the various engine combinations, is driven over the LA4 cycle.

It is clear that the final accuracy cannot be better than that of the input data and there are considerable difficulties in giving a definite forecast of the results to be expected from some of the candidates. The emission levels to be expected from the compound engine and the rotary engine are clear examples of this difficulty as is the fuel consumption of the rotary engine.

It was decided therefore to make detailed calculations for the case where the highest degree of accuracy for the input data could be expected and to estimate the likely variations from these calculated values for the other engines.

The detailed calculations were carried out using a cycle synthesis computer program which has been developed by Ricardo. The program is flexible in terms of the driving cycle which it will accept but for the purposes of these calculations, the LA4 cycle was of course employed. The cycle is fed in in terms of vehicle speed against time and the program calculates the engine performance which is necessary to drive the cycle.

Engine performance maps showing exhaust constituents, brake specific fuel consumptions and volumetric efficiency, all against brake mean-effective pressure and engine speed have also been entered in and the program then uses this data to calculate the gross fuel consumption and the mass of the individual exhaust pollutants in 1 second steps for the whole cycle.

As CVS-CH test data is only available, albeit for lower power/weight ratios and for somewhat lighter vehicles, for the naturally aspirated indirect injection engines, it was decided to use the computer program for this engine. The predicted engine performance data and emission maps given in Figs. 5-35 and 5-36 were used for this purpose and the following estimates resulted :-

Fuel consumption	11.3 l/100 km (20.7 miles/gallon)
NO_x	1.17 g/mile
HC	0.46 g/mile

A second set of calculations were run using typical ppm levels achieved from engines of this cylinder size when in optimum performance build. (Figures 5-37 and 5-38).

In this case for the 97 kW engine the following emission levels were predicted :-

NO_x	1.9 g/mile
HC	0.7 g/mile

Vehicle fuel economy levels were not calculated with the engine in this build but a CVS-CH fuel consumption approaching 10.5 l/100 km (22 mpg) would be expected.

CO levels were not calculated in either case as experience has indicated that provided the engine is operated at acceptable smoke levels, the CO levels will be below the target value of 3.4 g/mile.

The arguments employed in the prediction of the values to be expected for the other engines are given in the Power Plant Rating section of this report.

For comparison purposes predicted emission maps were also prepared for the boosted DI and IDI engines. These are shown in Figures 5-39, 5-40, 5-41 and 5-42. Due to limitations in the availability of air flow data for turbocharged engines, however, no computer calculations were carried out for the turbocharged engines.

FIG. No. 5-1
Drg. No D26084
Date 28-7-74

ESTIMATED TORQUE CURVE FOR

Ø 97 x 76 mm V8 GASOLINE ENGINE IN LOW EMISSIONS BUILD

BARE ENGINE A.I.T. 20°c. BARO 760 mm Hg.

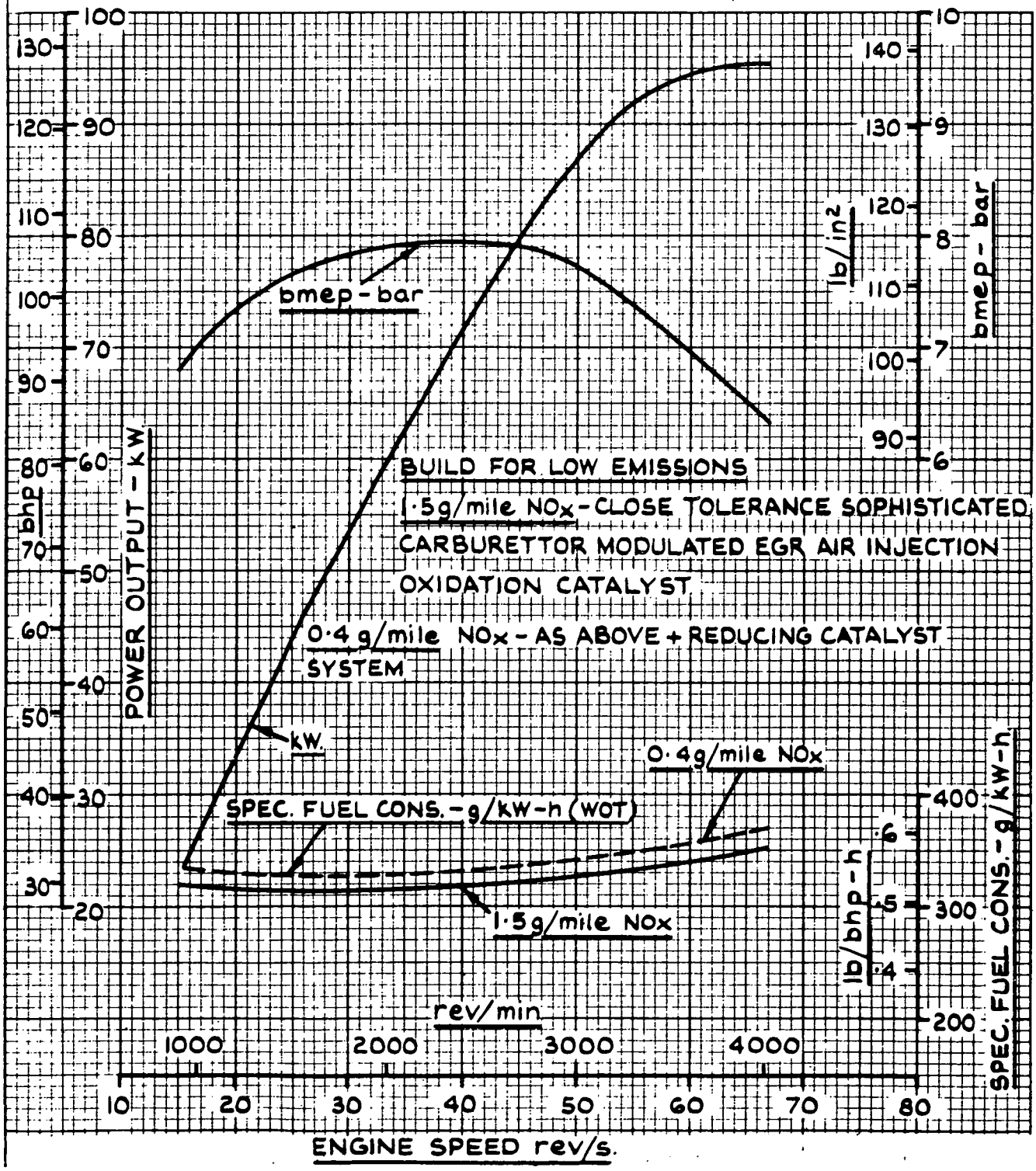

FIG. No 5-2
Drg. No D26085
Date 28-7-74

ESTIMATED FUEL CONSUMPTION CURVES FOR A Ø97 x 76mm V8 GASOLINE ENGINE IN LOW EMISSIONS (1·5 g/mile NOx) BUILD.

BARE ENGINE A.I.T. 20°C. BARO 760mm Hg.

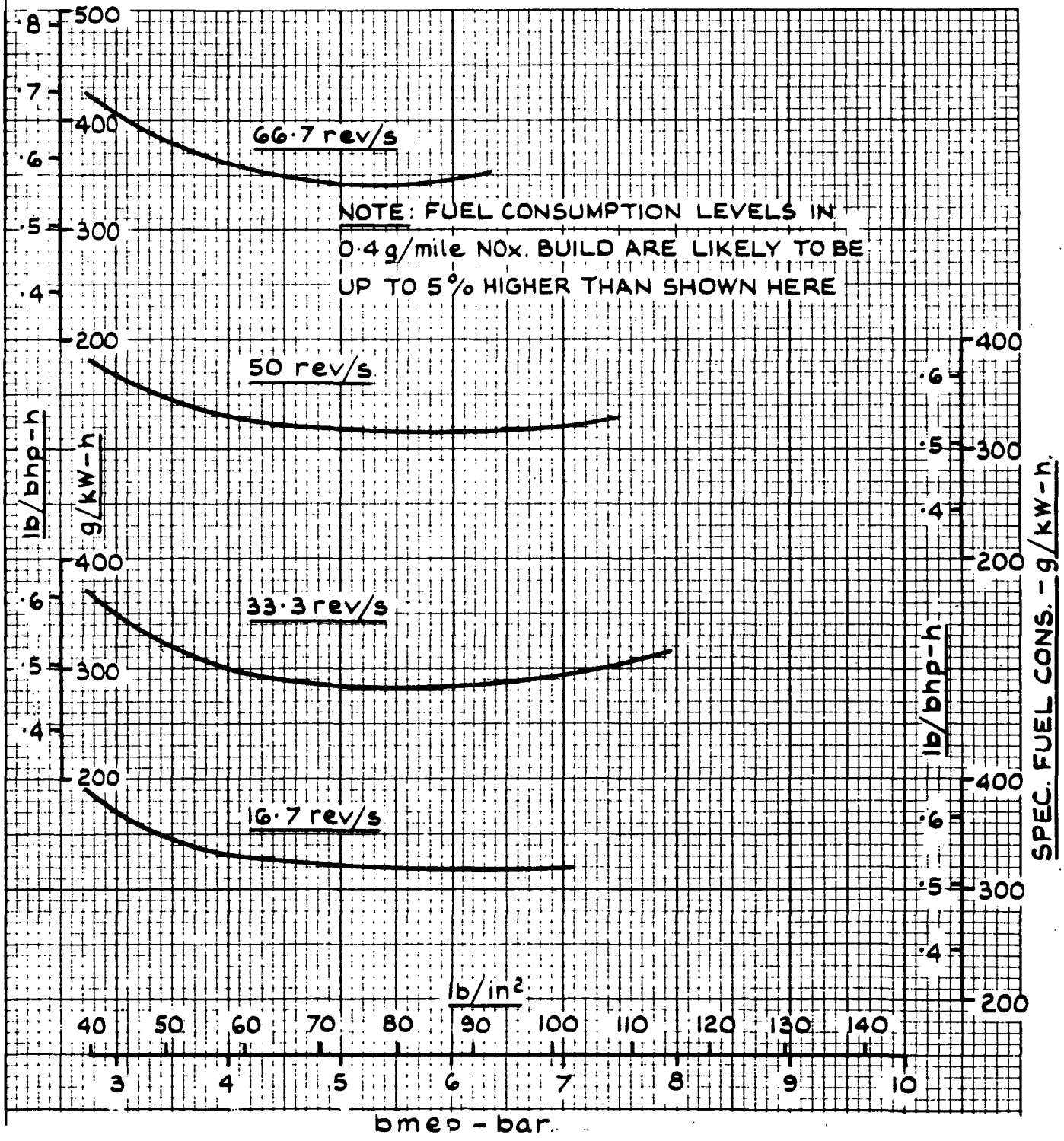

FIG. No 5-3
Drg. No D26086
Date 28-7-74

ESTIMATED TORQUE CURVE FOR A Ø 88 × 82 mm 6 CYLINDER "EUROPEAN TYPE" GASOLINE ENGINE IN LOW EMISSIONS BUILD

BARE ENGINE A.I.T. 20°c. BARO 760 mm Hg.

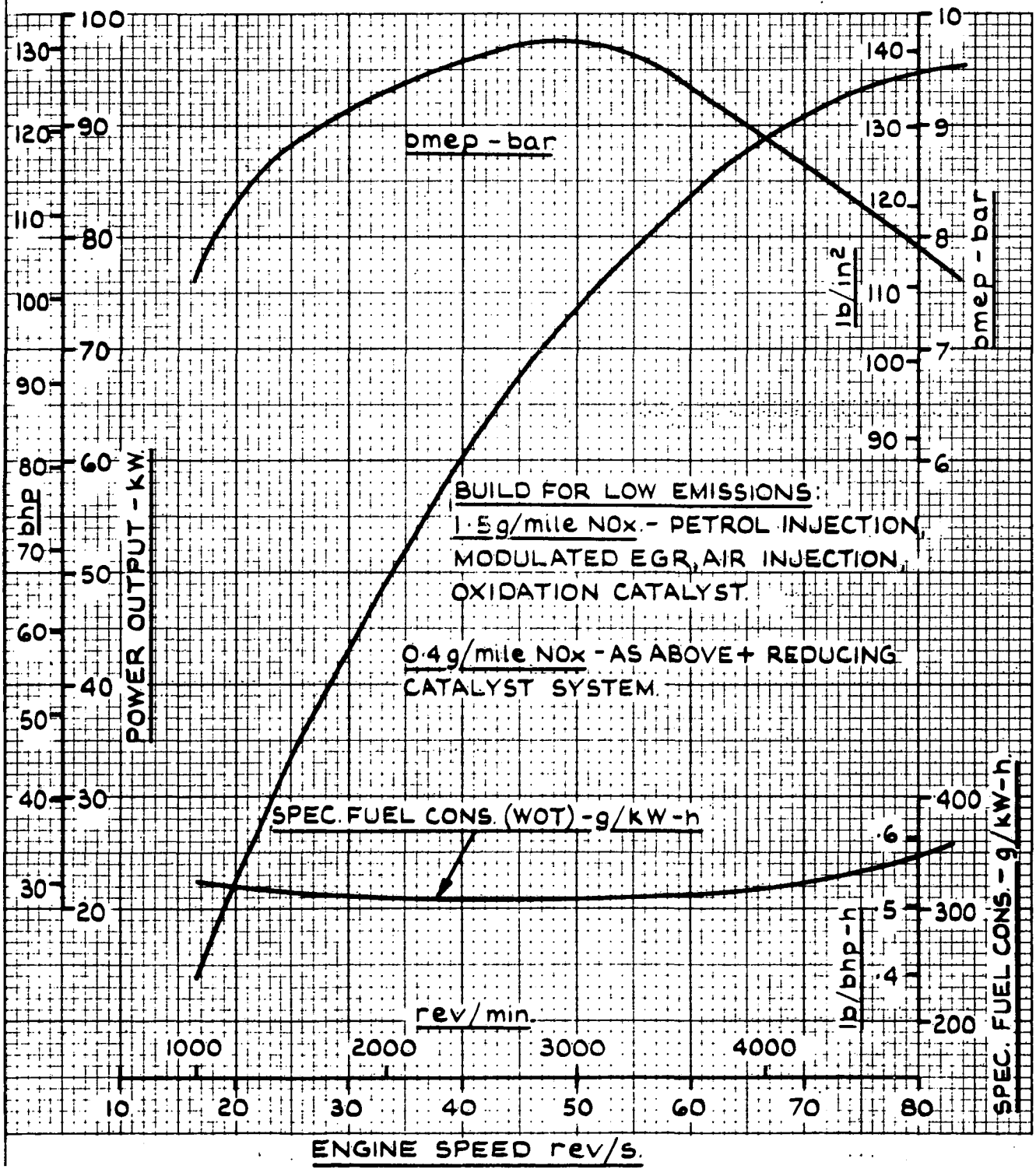

FIG. No 5-4
Drg. No. D26087
Date 28-7-74

ESTIMATED LOAD RANGE CONSUMPTION CURVES FOR A SIX CYLINDER ϕ 88 x 82 mm "EUROPEAN TYPE" GASOLINE ENGINE IN 1·5g/mile NOx BUILD.

PETROL INJECTION. EGR, AIR INJECTION + OXIDATION CATALYST.

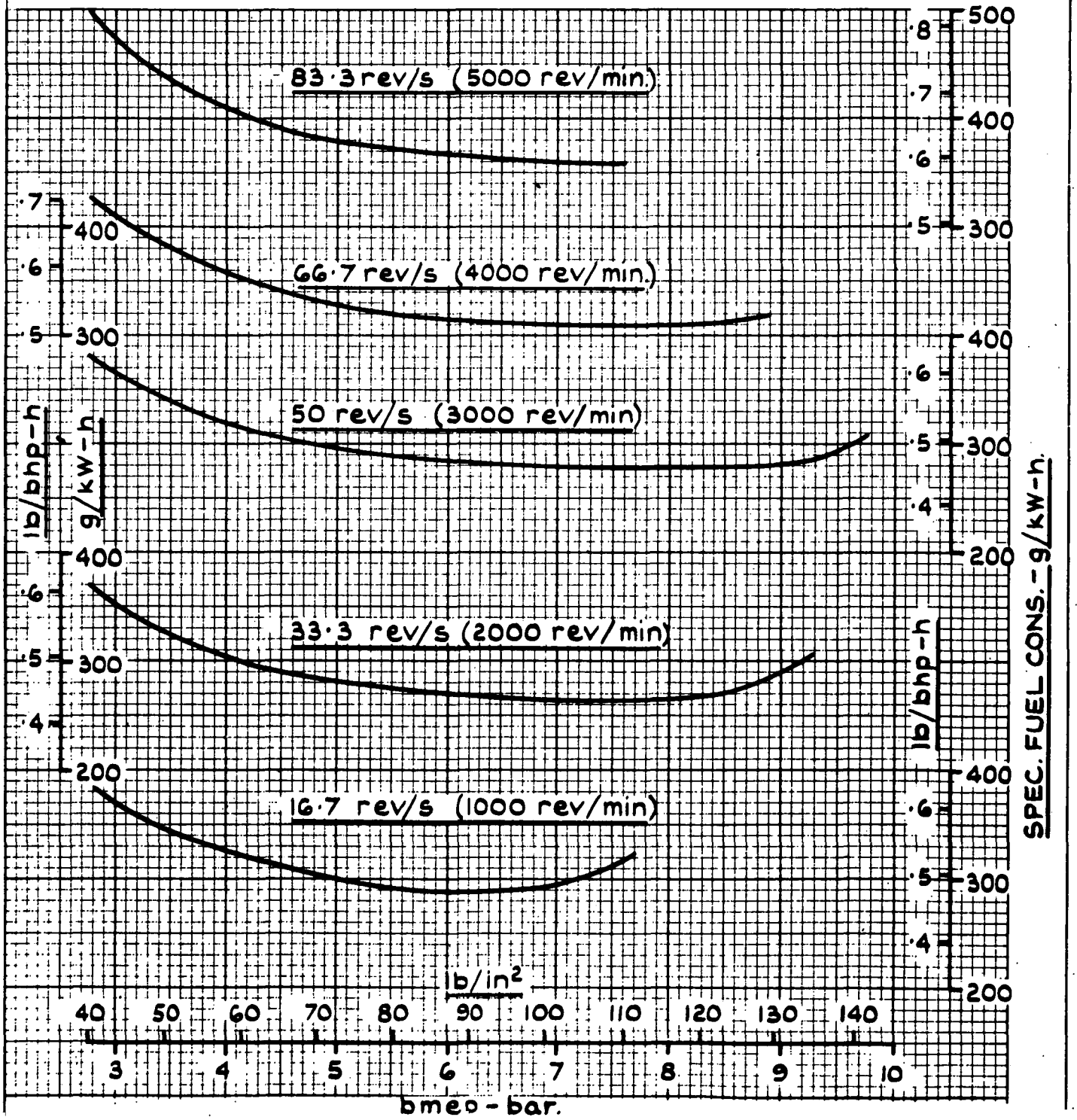

FIG. No. 5·5
Drg. No. D26074
Date 28-7-74

ESTIMATED PERFORMANCE CURVE FOR NATURALLY ASPIRATED ϕ 88 x 98mm V8 COMET V ENGINE

BARE ENGINE. LOW EMISSIONS BUILD (1·5g/mile NOx IN A 3500 lb PASSENGER CAR) AIT 20°c BARO 760 mm Hg.

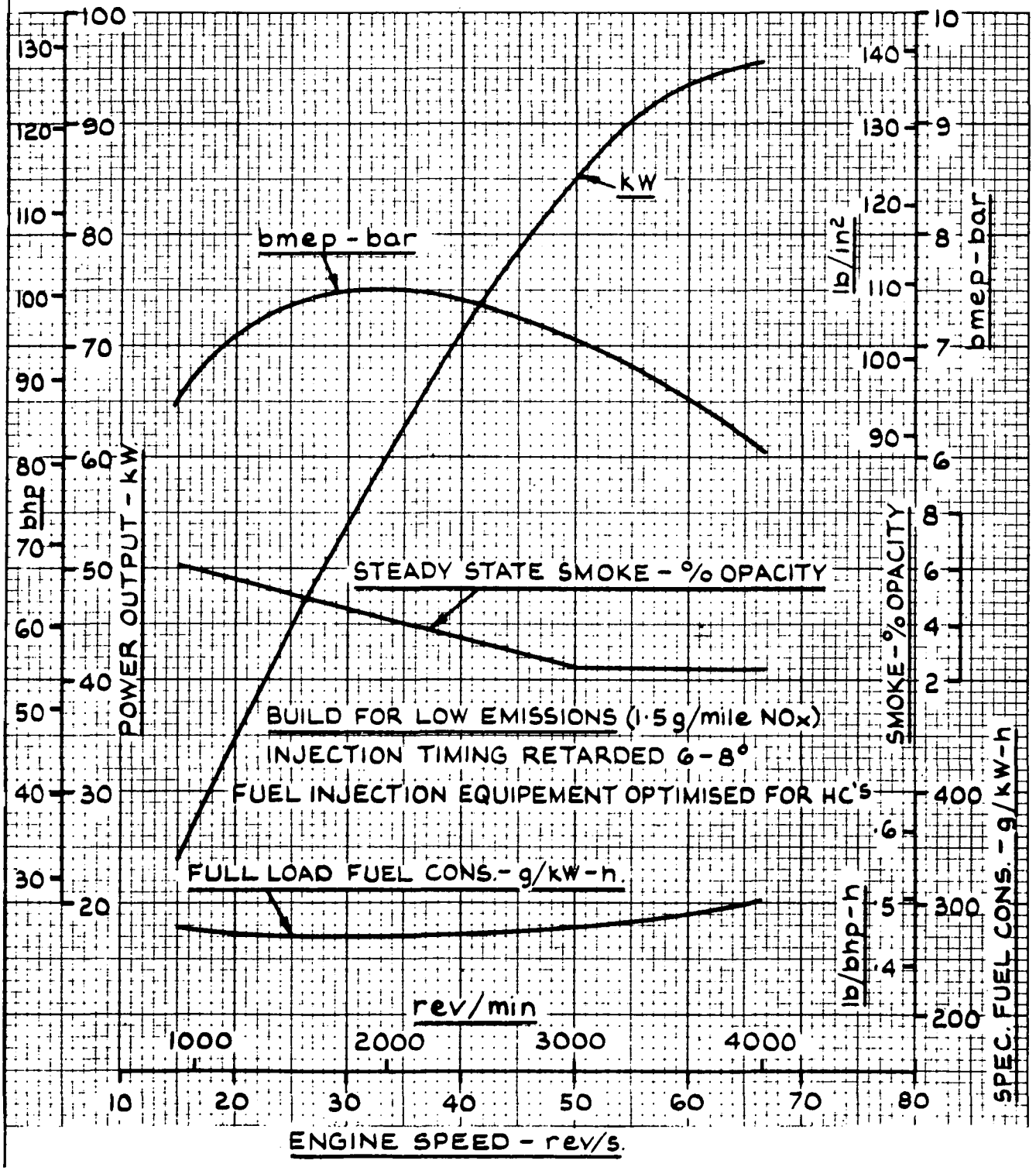

FIG. No. 5·6
Drg. No. D 26075
Date 28-7-74

LOAD RANGE FUEL CONSUMPTION CURVES FOR NATURALLY ASPIRATED ø 88 x 98 mm V8 COMET V ENGINE.

BARE ENGINE. LOW EMISSIONS BUILD (1·5g/mile NOx IN A 3500 lb PASSENGER CAR) AIT 20°C. BARO 760 mm Hg.

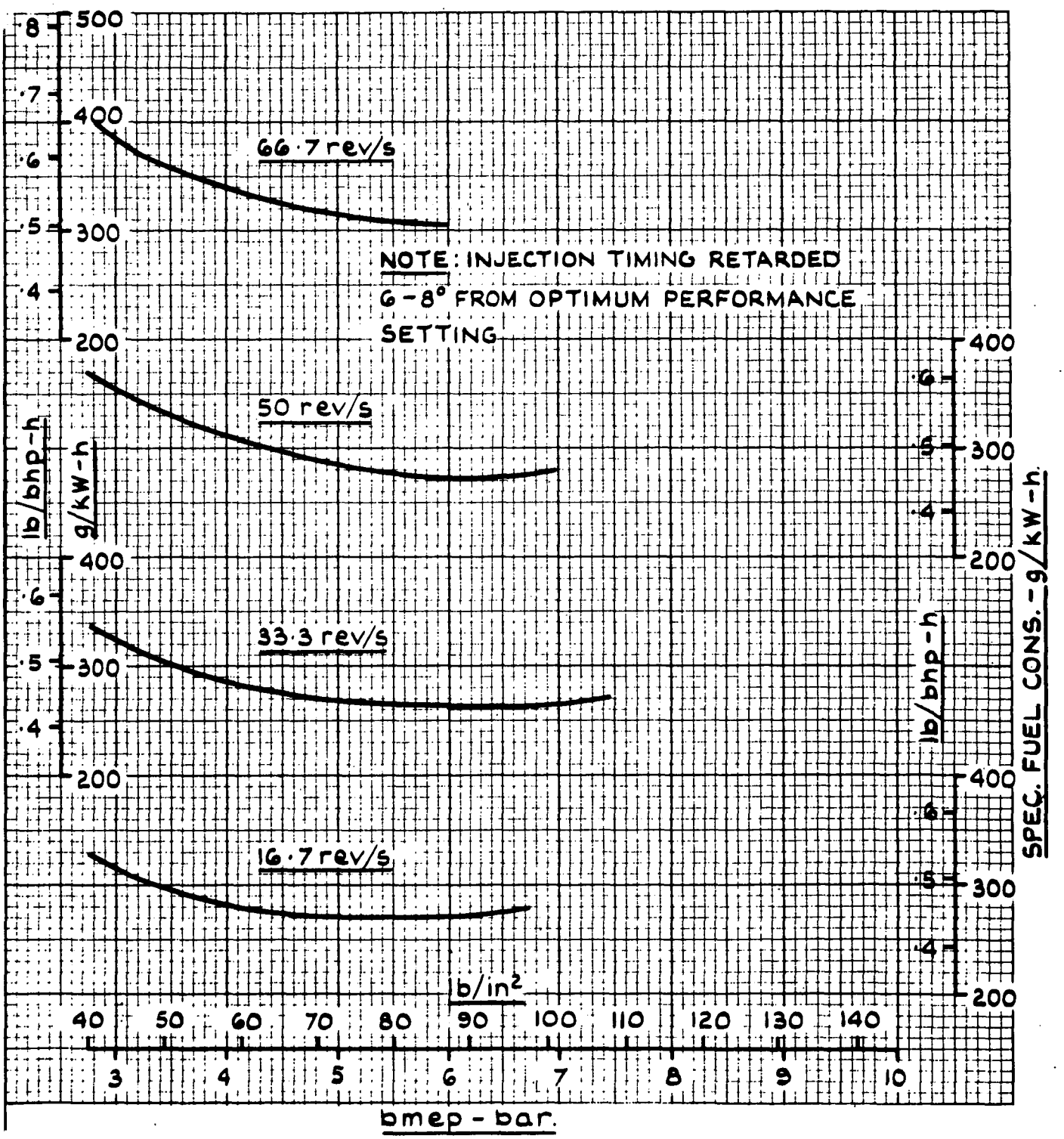

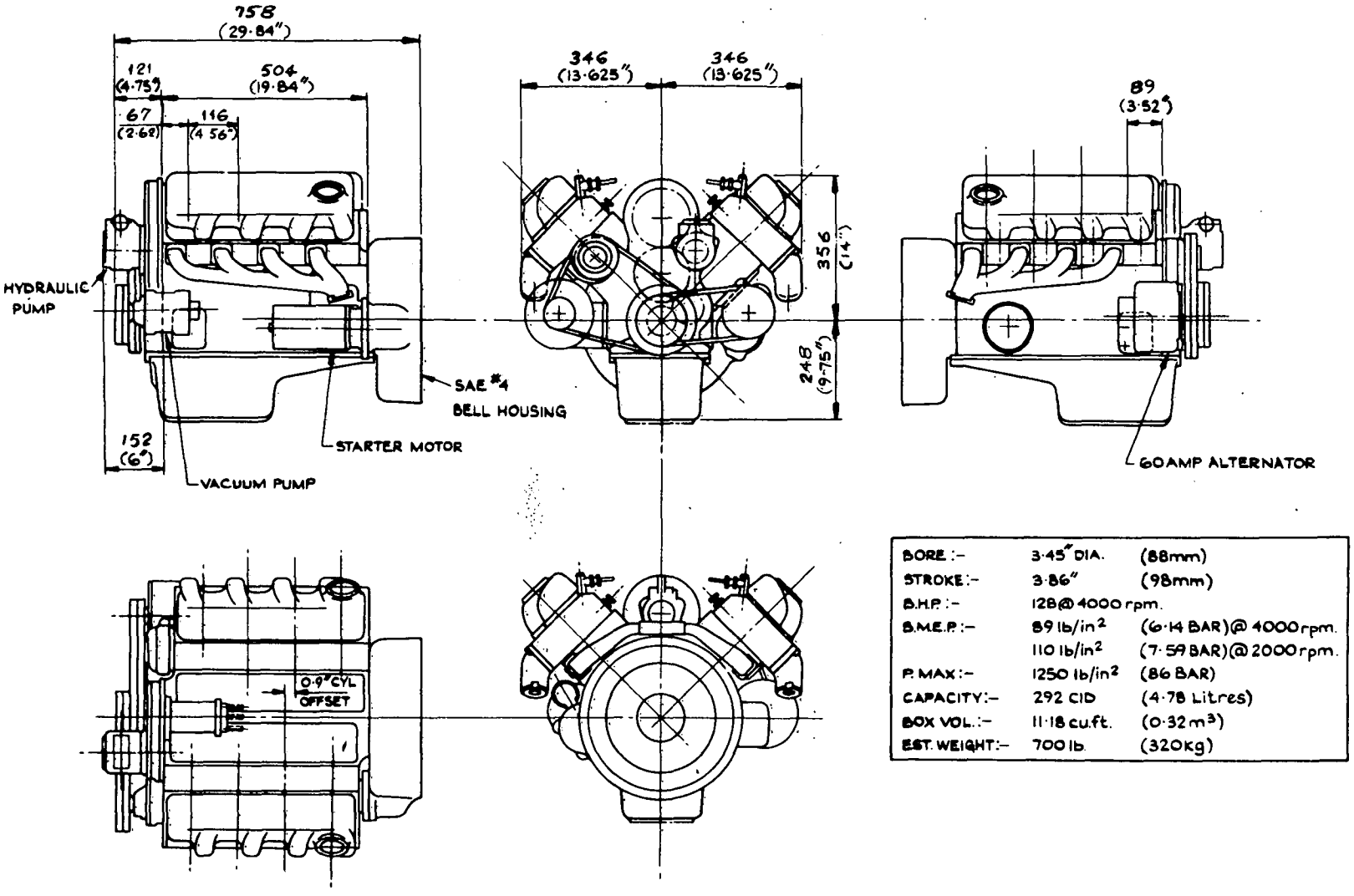

BORE :-	3·45" DIA.	(88mm)
STROKE :-	3·86"	(98mm)
B.H.P. :-	128 @ 4000 rpm.	
B.M.E.P. :-	89 lb/in²	(6·14 BAR) @ 4000 rpm.
	110 lb/in²	(7·59 BAR) @ 2000 rpm.
P. MAX :-	1250 lb/in²	(86 BAR)
CAPACITY :-	292 CID	(4·78 Litres)
BOX VOL. :-	11·18 cu.ft.	(0·32 m³)
EST. WEIGHT :-	700 lb.	(320 kg)

DRG. No. 3084/3

E.P.A. DIESEL 'IMPACT' PROJECT
PHASE III ENGINE CONFIGURATION STUDY
96 kW N/A-V8-I.D.I. DIESEL ENGINE INSTALLATION DRG.

FIG. 5

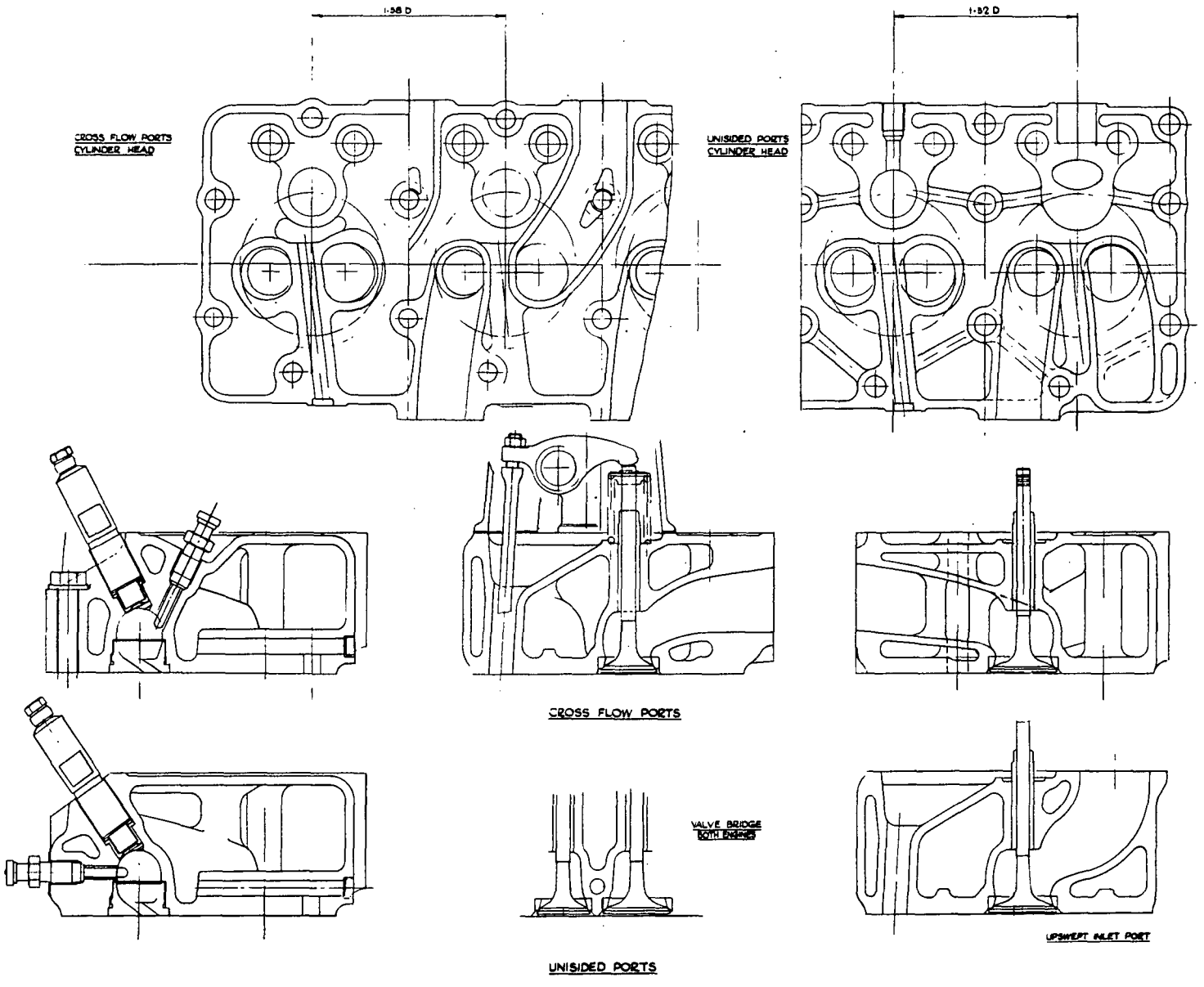

E.P.A. DIESEL 'IMPACT' PROJECT
PHASE III ENGINE CONFIGURATION STUDY
N.A. V8 I.D.I DIESEL ENGINE
COMPARISON OF CROSSFLOW / UNISIDED CYLINDER HEADS

DRG. Nº 3084/1

FIG. 5-8

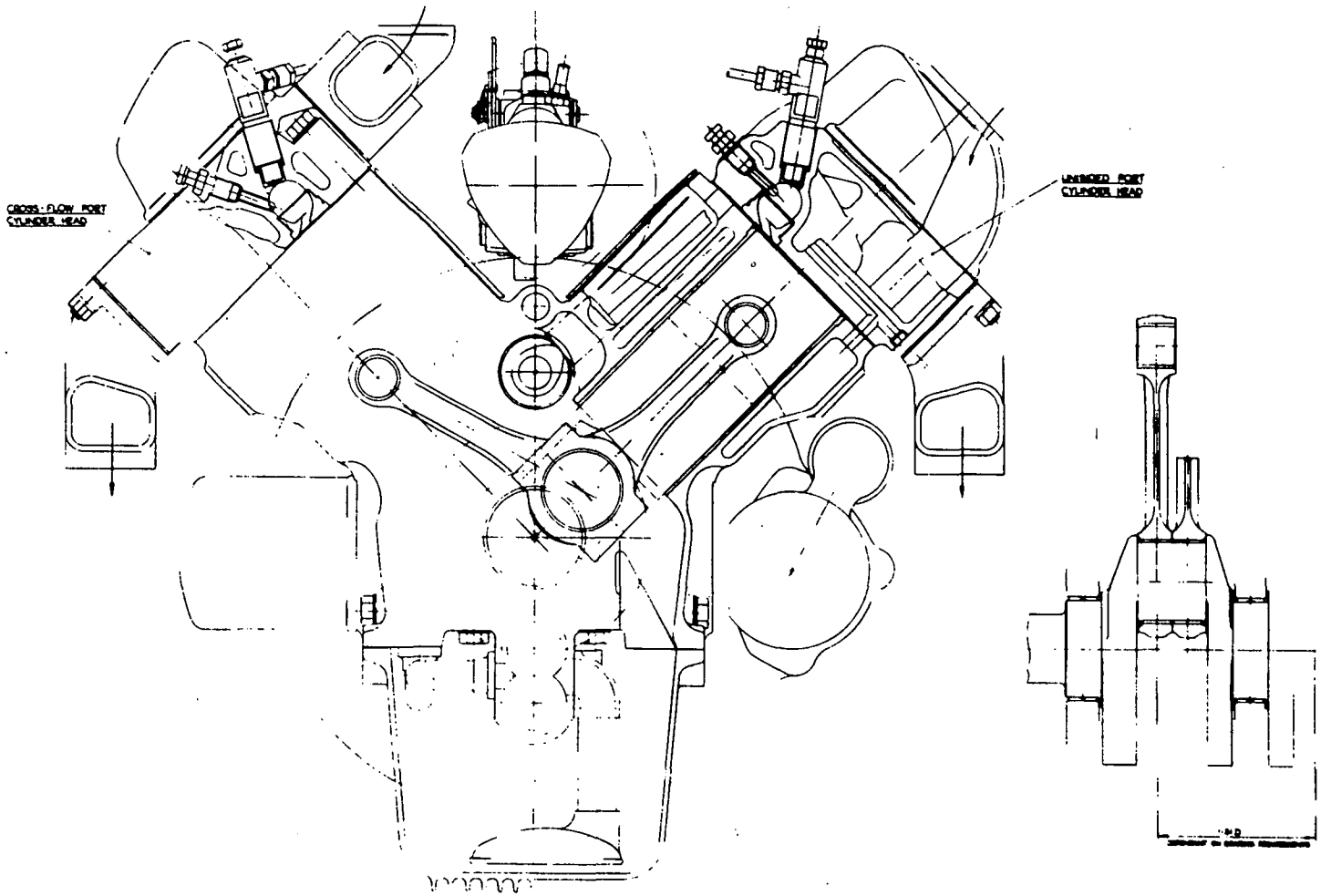

E.P.A. DIESEL 'IMPACT' PROJECT
PHASE III ENGINE CONFIGURATION STUDY

N.A.-V8-I.D.I. DIESEL ENGINE CROSS-SECTIONAL ARRANGEMENT.

DRG. Nº 3084/2

FIG. No. 5-10

Drg. No. D26076

Date 28-7-74

ESTIMATED PERFORMANCE CURVE FOR BOOSTED SIX CYLINDER ϕ 90x 100mm I.D.I. ENGINE IN LOW EMISSIONS BUILD (1·5 g/mile NOx IN A 3500 lb PASSENGER CAR)

BARE ENGINE AIT 20°C. BARO 760mm Hg.

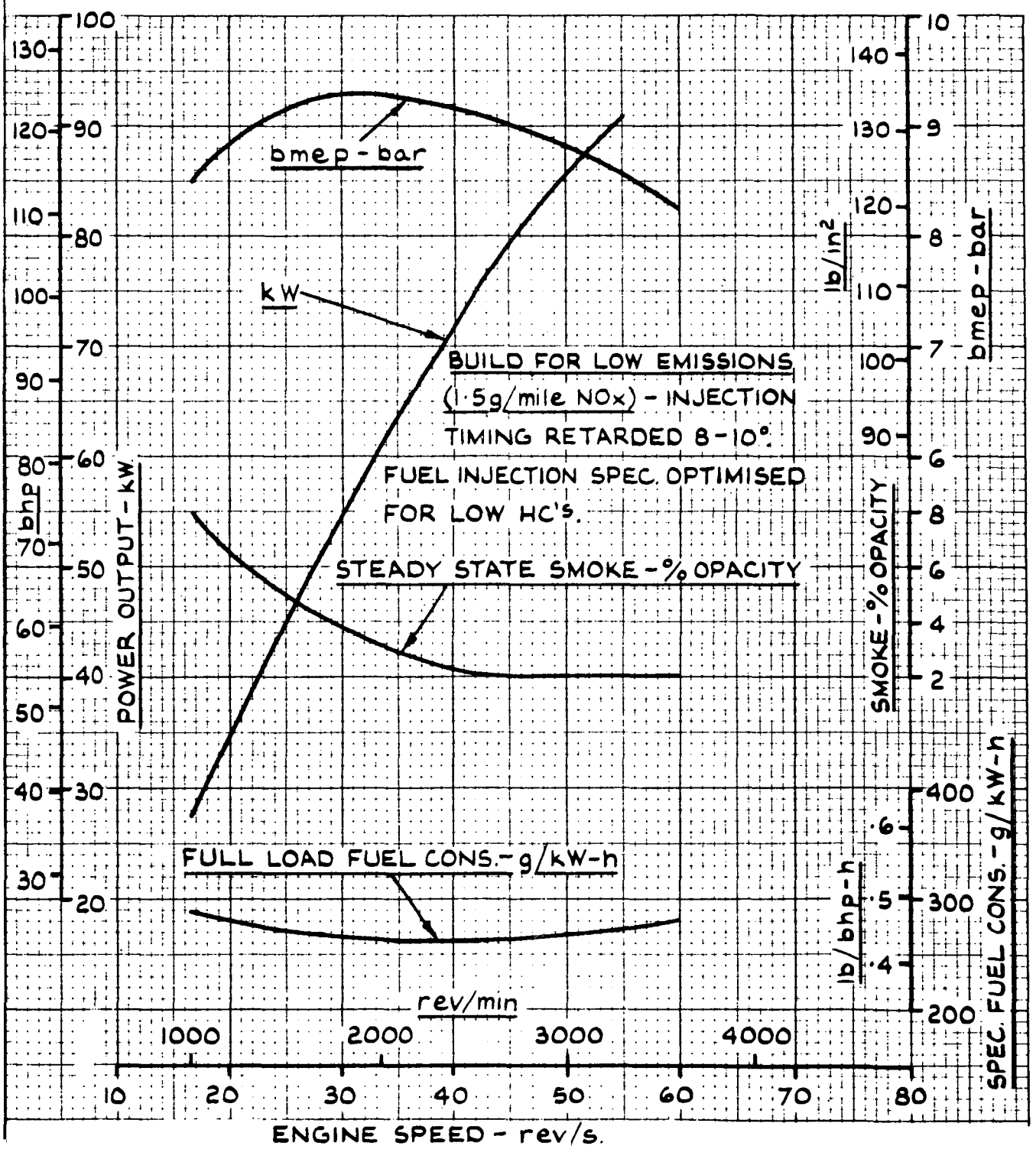

FIG. No 5-11
Drg. No. D26077
Date 28-7-74

ESTIMATED LOAD RANGE FUEL CONSUMPTION CURVES FOR A BOOSTED SIX CYLINDER Ø 90 x 100 mm IDI ENGINE IN LOW EMISSIONS BUILD (1·5 g/mile NOx IN A 3500 lb PASSENGER CAR.)

BARE ENGINE AIT 20°C. BARO 760 mm Hg.

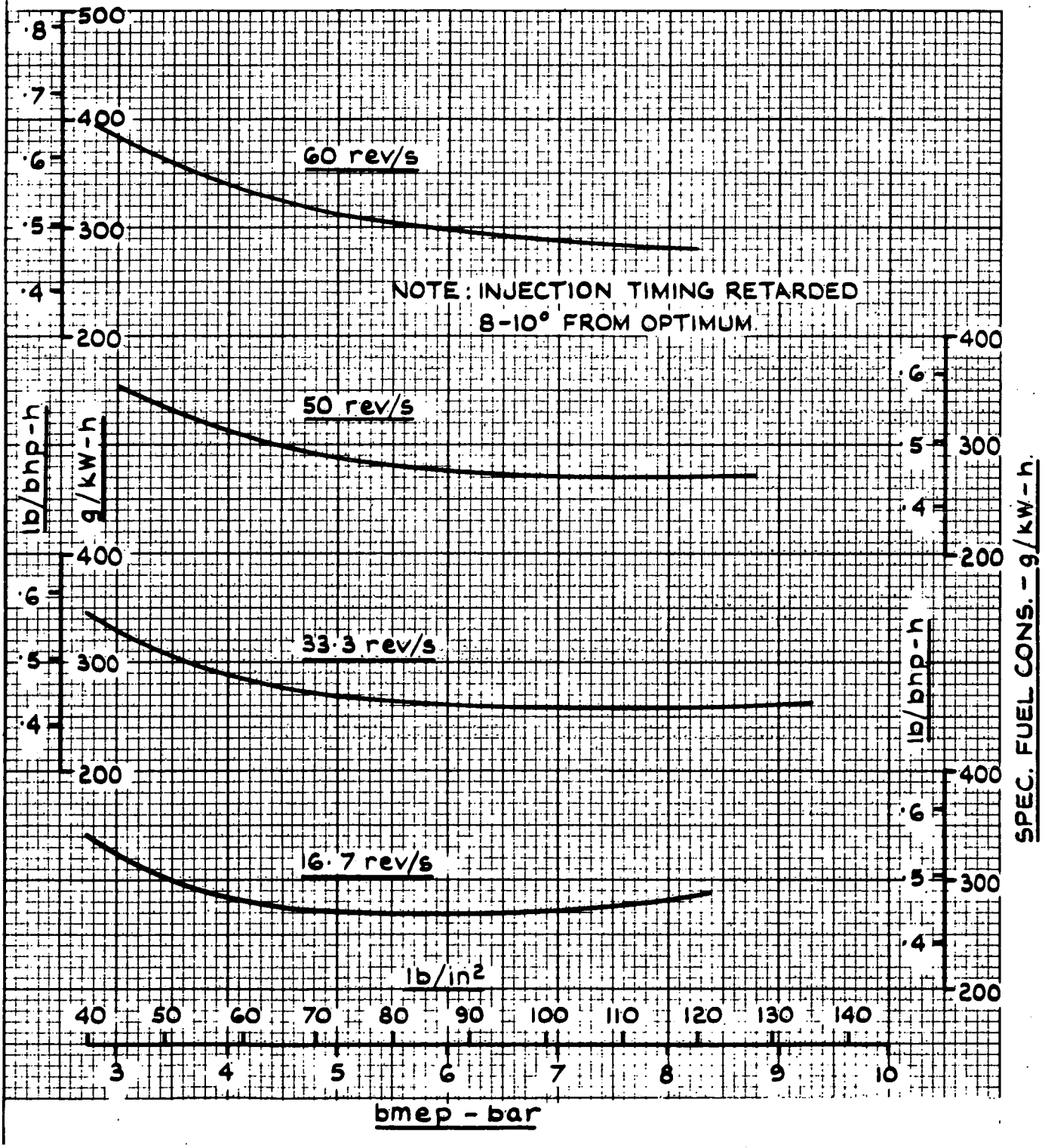

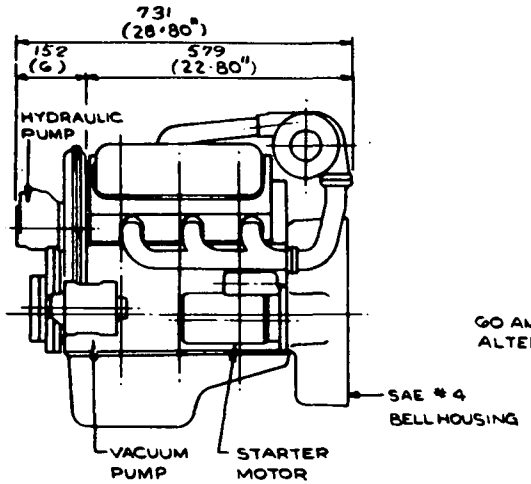

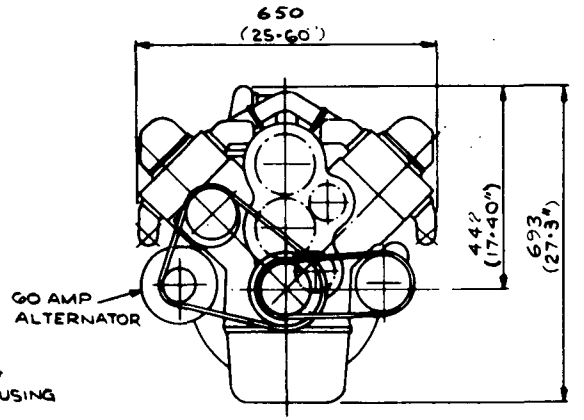

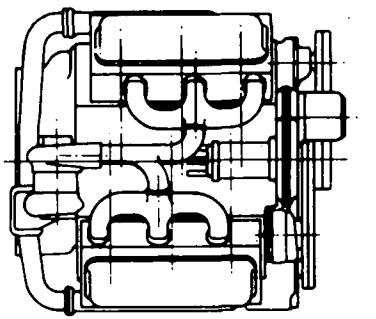

TURBOCHARGED 90° V6 ENGINE

BORE :-	3·54" DIA (90 mm)	
STROKE :-	3·94" (100 mm)	
B.H.P :-	128 @ 3600 r.p.m.	
B.M.E.P :-	135 lb/in² (9·3 BAR @ 2000 r.p.m.	
P. MAX :-	1650 lb/in² (113 BAR)	
CAPACITY :-	234 C.I.D. (3·84 Litres)	
	IN LINE 6	V6
BOX VOL :-	12·7 cu.ft. (0·36 m³)	11·6 cu.ft. (0·33 m³)
EST WEIGHT :-	720 lb (327 kg)	680 lb (309 kg)

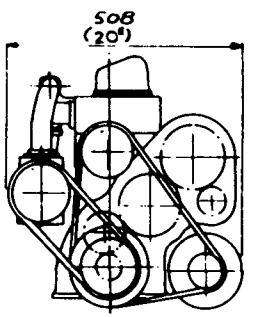

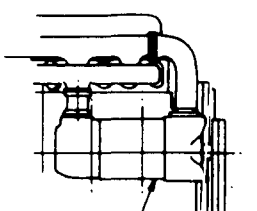

COMPREX BLOWER ON IN LINE 6 CYLINDER

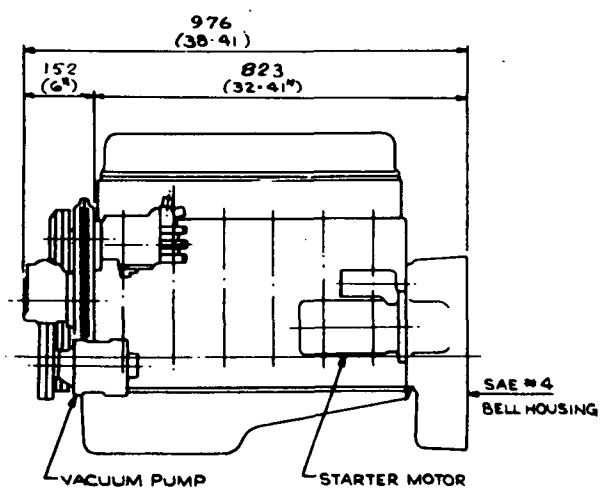

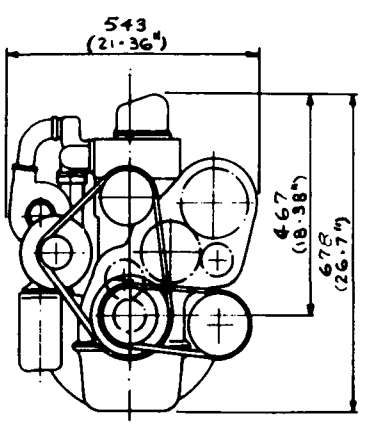

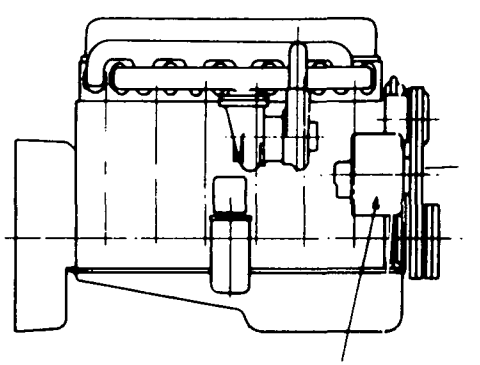

TURBOCHARGED IN LINE 6 CYLINDER

E.P.A. DIESEL 'IMPACT' PROJECT
PHASE III ENGINE CONFIGURATION STUDY

DRG. No. 3084/15

96 kW 6 CYLINDER TURBOCHARGED I.D.I. DIESEL ENGINE
INSTALLATION DRAWING SHOWING COMPARISON BETWEEN IN LINE 6/V6

FIG. 5-12

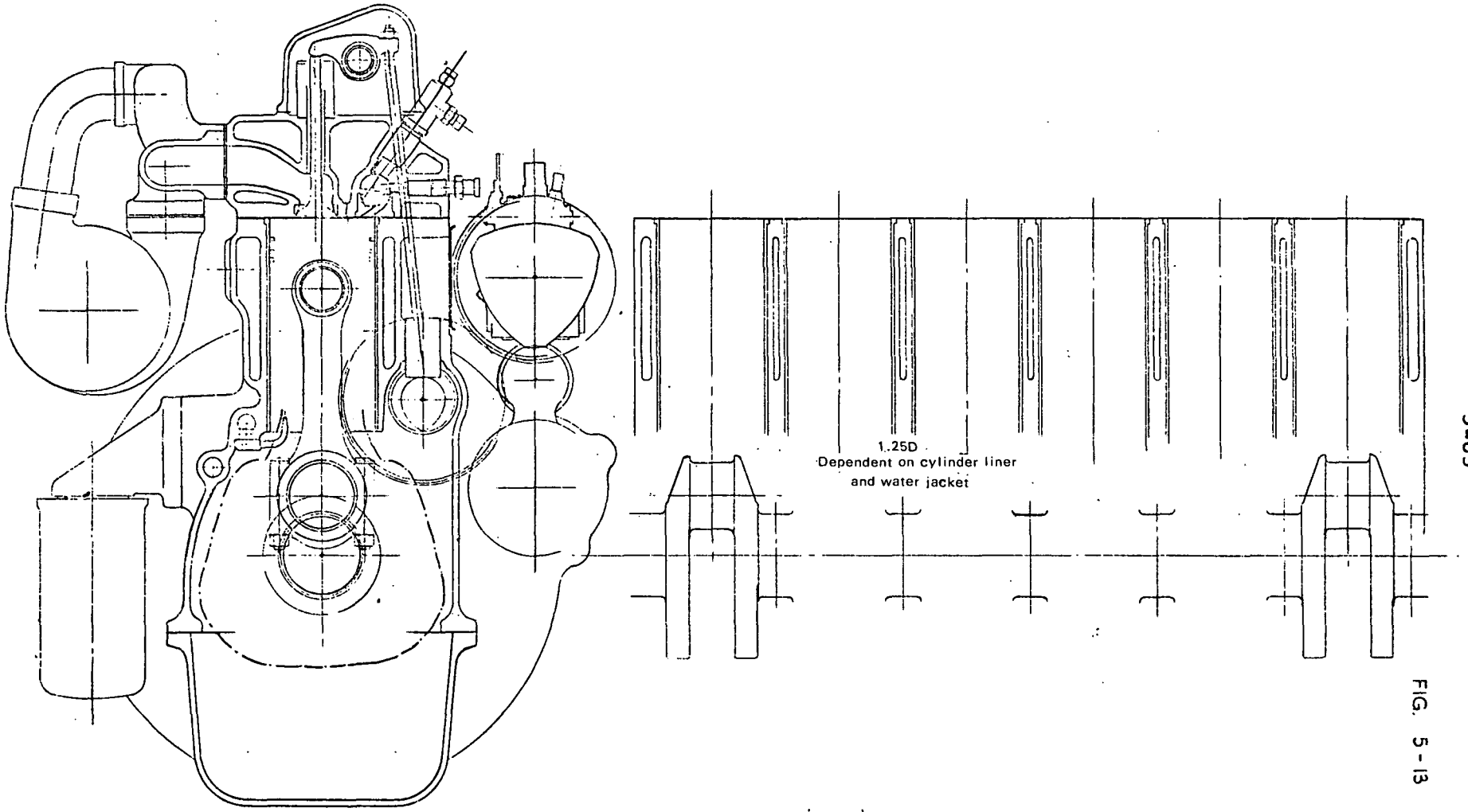

FIG. 5 - 13

E.P.A. DIESEL 'IMPACT' PROJECT
PHASE III ENGINE CONFIGURATION STUDY
6 CYLINDER TURBOCHARGED IDI. DIESEL ENGINE
CROSS & LONGITUDINAL ARRANGEMENT DRAWING

DRG. Nº 3084/14

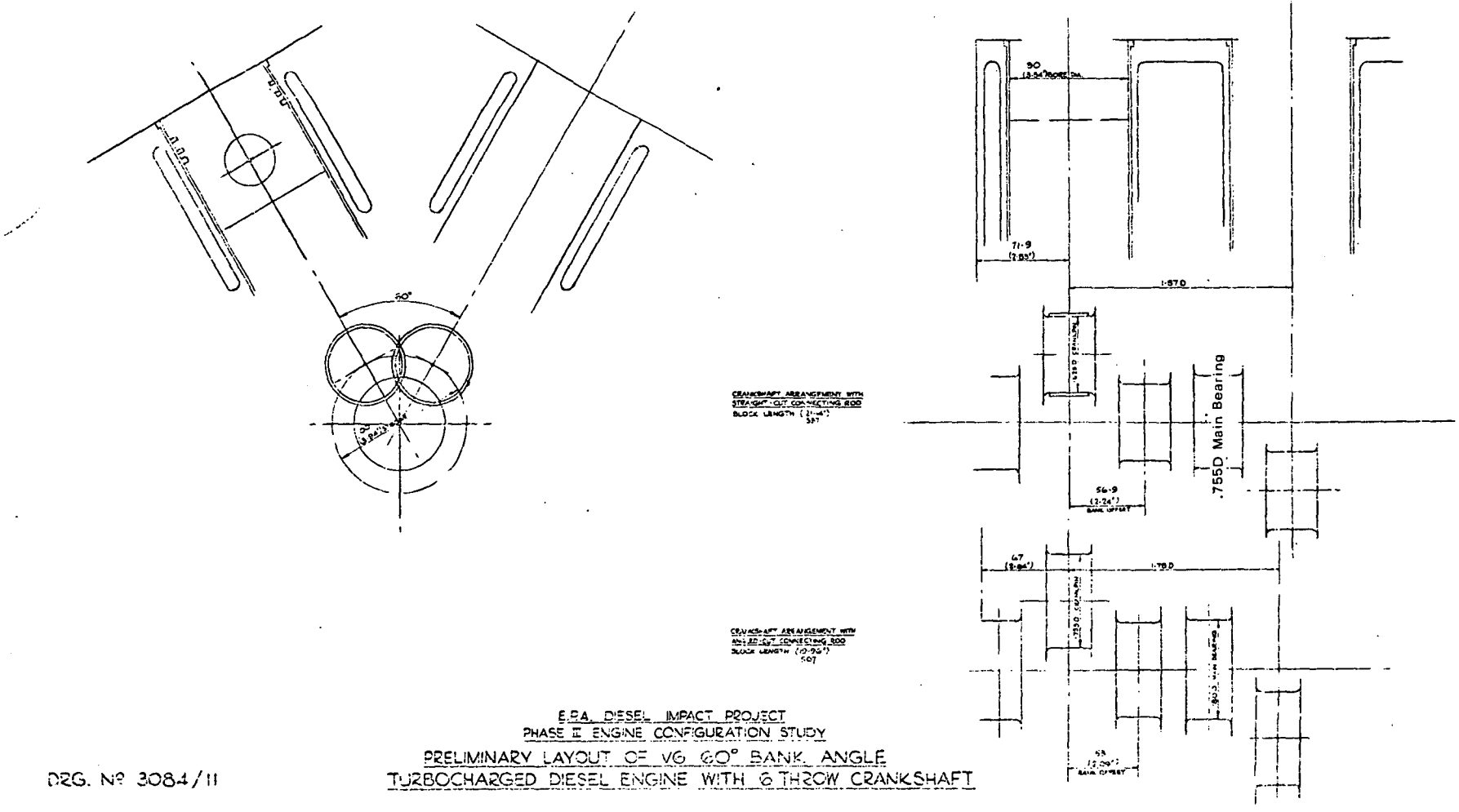

FIG. 5 - 14

E.P.A. DIESEL IMPACT PROJECT
PHASE II ENGINE CONFIGURATION STUDY
PRELIMINARY LAYOUT OF V6 60° BANK ANGLE
TURBOCHARGED DIESEL ENGINE WITH 6 THROW CRANKSHAFT

DRG. Nº 3084/11

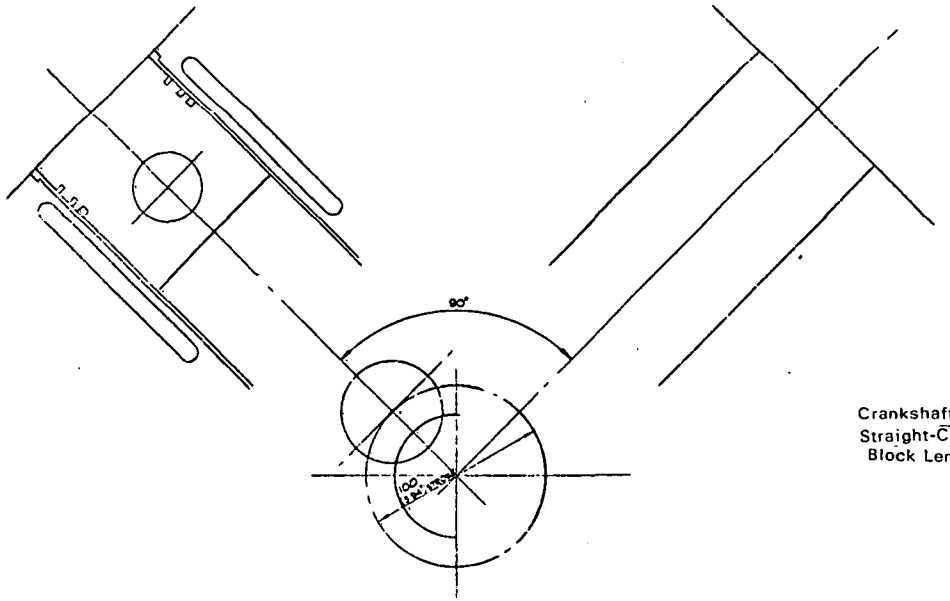

Crankshaft Arrangment with
Straight-Cut Connecting Rod
Block Length (18.15") 461

CRANKSHAFT ARRANGEMENT WITH
ANGLED-CUT CONNECTING ROD
BLOCK LENGTH (461.75")
425

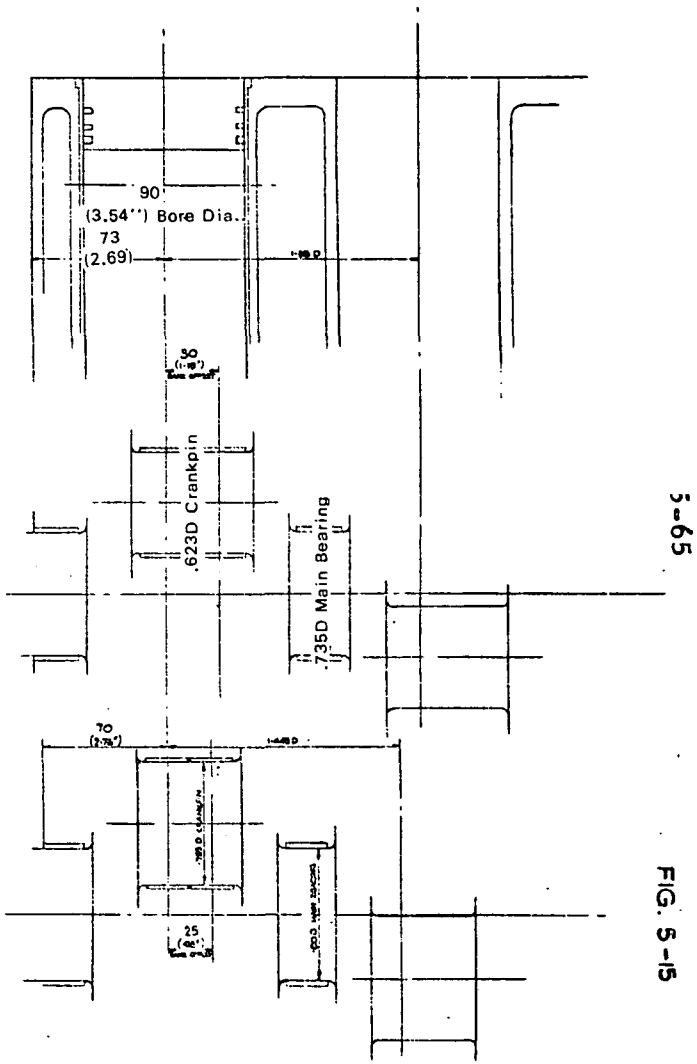

E.P.A. DIESEL 'IMPACT' PROJECT
PHASE III ENGINE CONFIGURATION STUDY
PRELIMINARY LAYOUT OF V6 TURBOCHARGED DIESEL ENGINE
WITH 3 THROW CRANKSHAFT

DRG. Nº 3084/12

FIG. 5-15

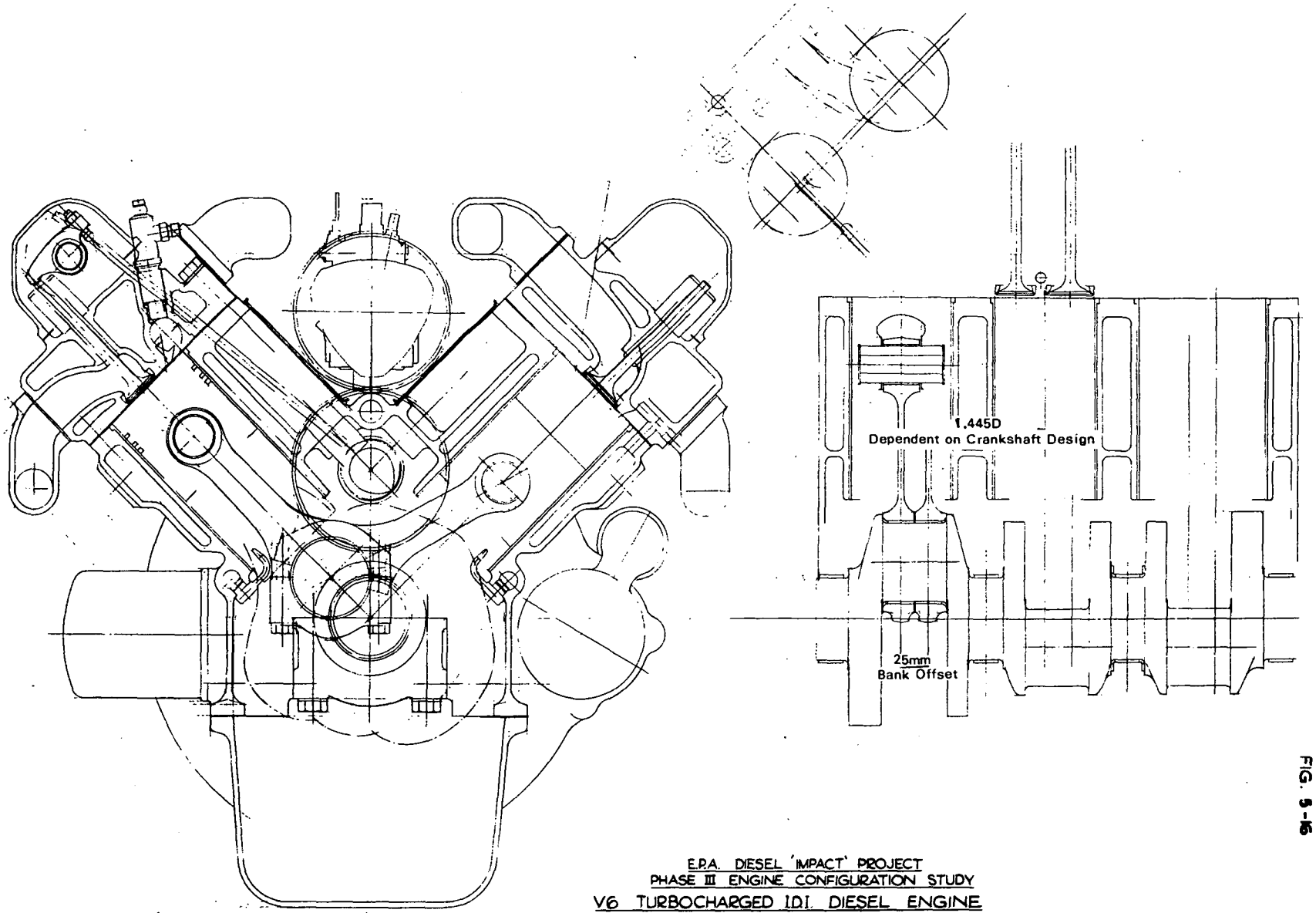

FIG. 5-16

E.P.A. DIESEL 'IMPACT' PROJECT
PHASE III ENGINE CONFIGURATION STUDY
V6 TURBOCHARGED I.D.I. DIESEL ENGINE
CROSS & LONGITUDINAL ARRANGEMENT DRAWINGS.

DRG. Nº 3084/13

FIG. No 5-17
Drg. No. D26078
Date 28-7-74

ESTIMATED PERFORMANCE CURVES FOR
BOOSTED ϕ 93x94mm SIX CYLINDER D.I. IN MINIMUM EMISSIONS BUILD.
(≏ 2·5g/mile NOx IN A 3500 lb PASSENGER CAR)

ENGINE BARE AIT 20°C. BARO 760 mm Hg.

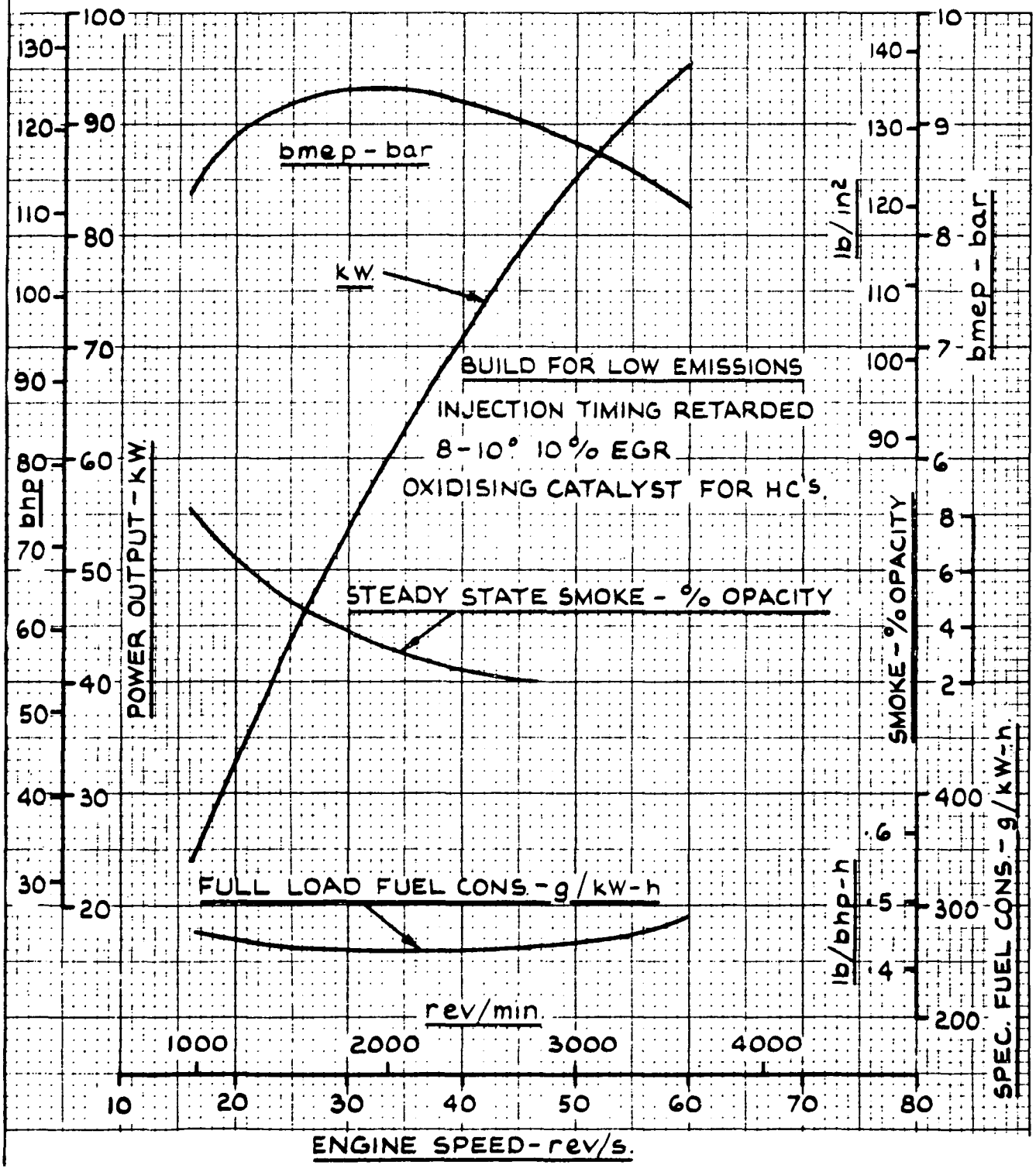

FIG. No. 5-18
Drg. No. D26079
Date 28-7-74

ESTIMATED LOAD RANGE FUEL CONSUMPTION CURVES FOR A BOOSTED ϕ93 x 94 mm SIX CYLINDER D.I. ENGINE MINIMUM EMISSIONS BUILD. (≏ 2·5g/mile NOx IN A 3500 lb PASSENGER CAR)

BARE ENGINE AIT 20°C BARO 760 mm Hg.

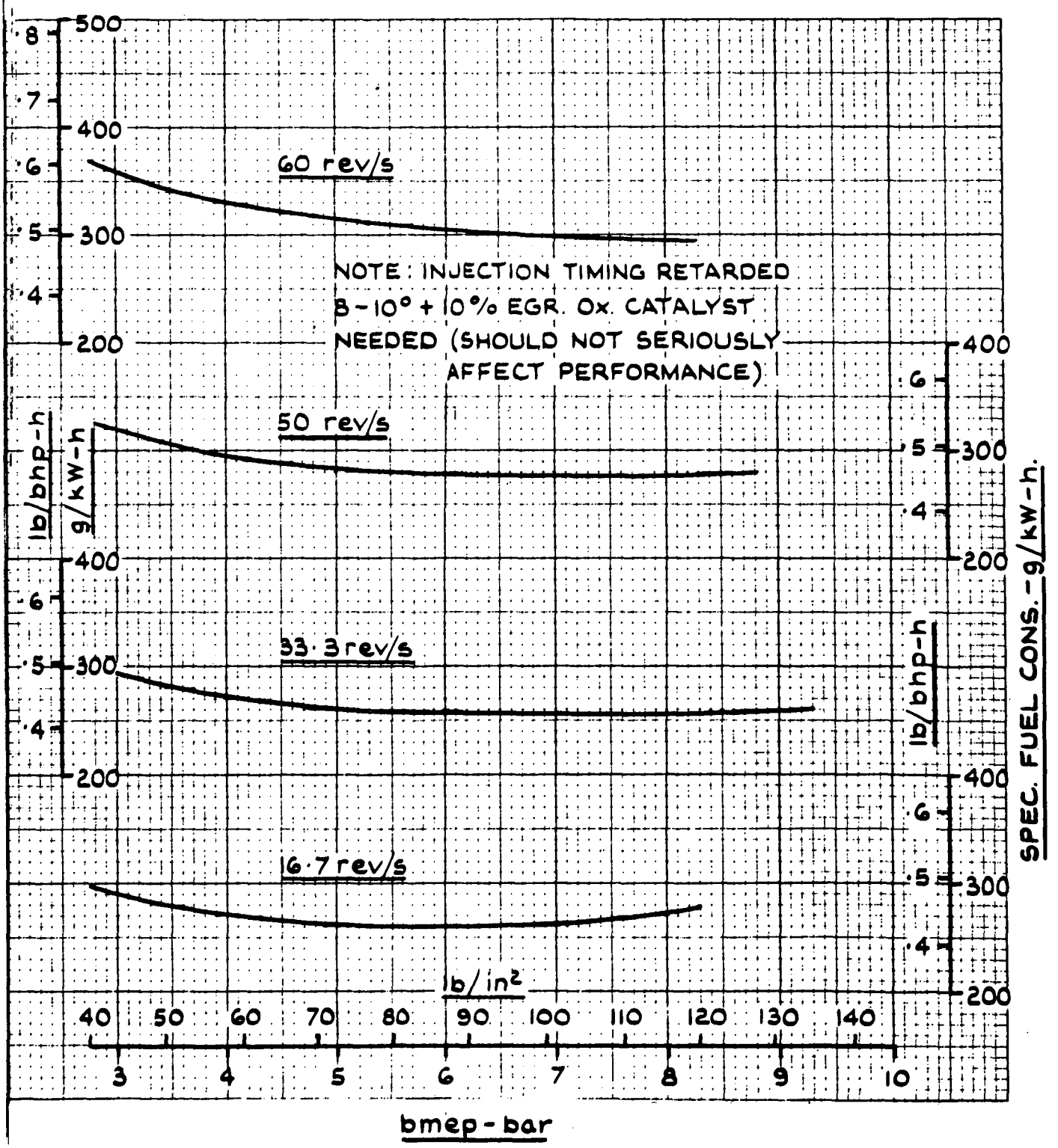

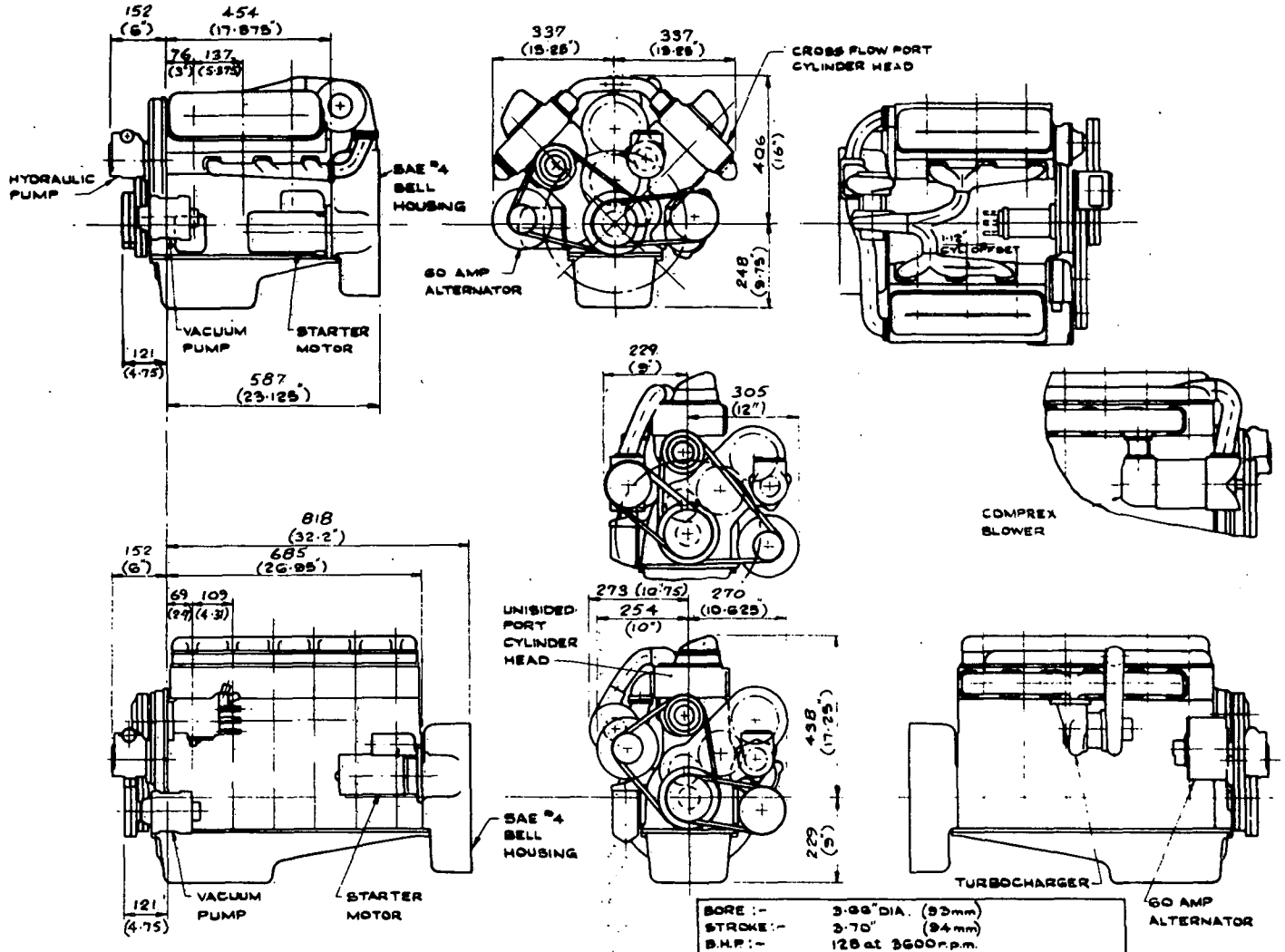

BORE :-	3·66" DIA. (93mm)	
STROKE :-	3·70" (94mm)	
B.H.P :-	128 at 3600 r.p.m.	
B.M.E.P :-	135 lb/in² (9·3 BAR) at 2000 r.p.m	
	120 lb/in² (8·3 BAR) at 3600 r.p.m	
P. MAX. :-	1800 lb/in² (124 BAR)	
CAPACITY :-	234 C.I.D. (3·84 Litres)	
	IN-LINE 6	V6
BOX VOL. :-	12 cu.ft. (0·34 m³)	11 cu.ft (0·31 m³)
EST. WEIGHT :-	660 lb. (310 kg)	660 lb. (300 kg)

DRG. No 3084/5

E.P.A. DIESEL IMPACT PROJECT
PHASE III ENGINE CONFIGURATION STUDY
96 kW 6 CYLINDER TURBOCHARGED D.I. DIESEL ENGINE
INSTALLATION DRAWING SHOWING COMPARISON BETWEEN IN-LINE 6/V6

FIG. 5-19

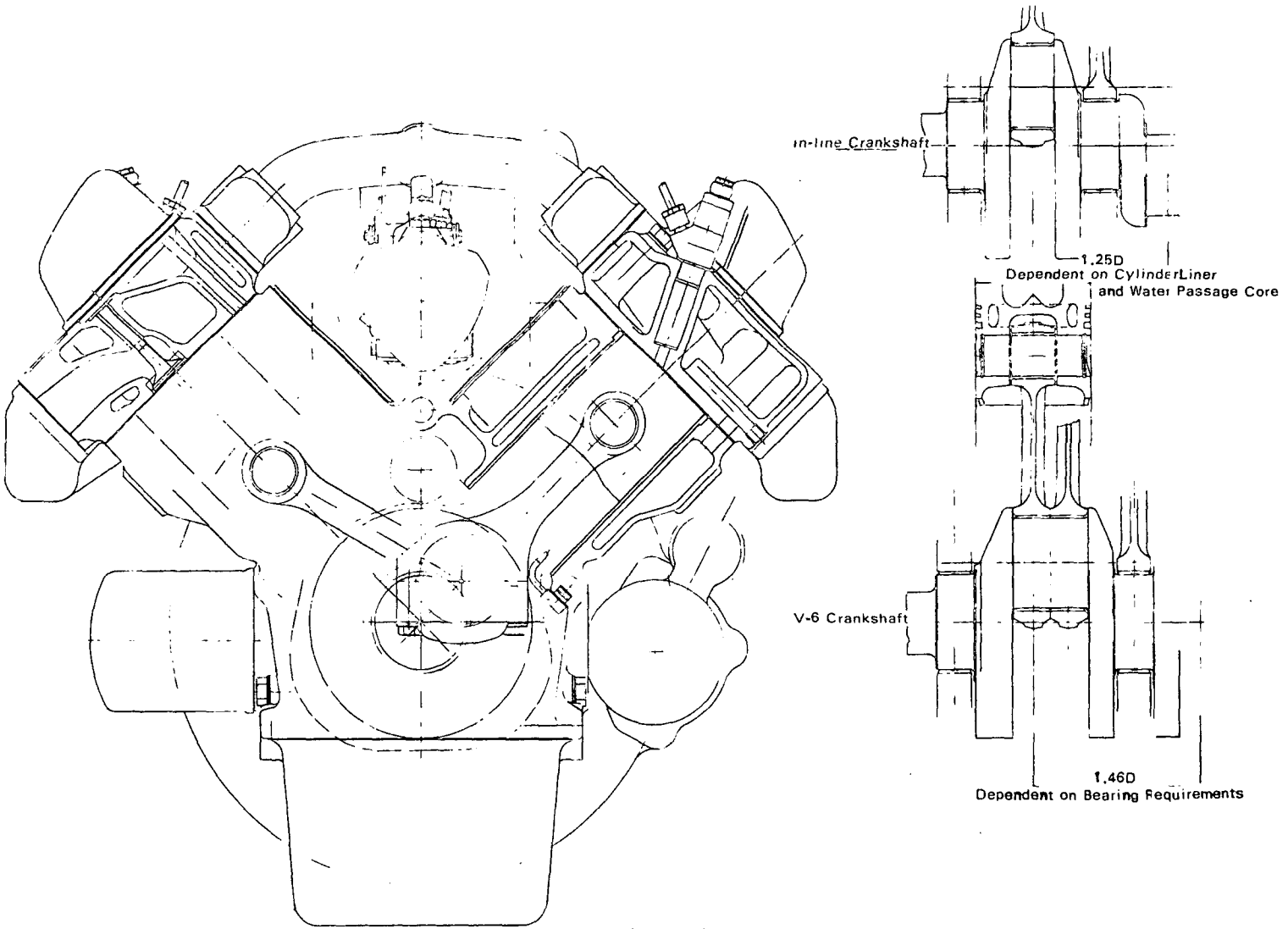

E.P.A. DIESEL 'IMPACT' PROJECT
PHASE III ENGINE CONFIGURATION STUDY
6 CYLINDER TURBOCHARGED D.I. DIESEL ENGINE
CROSS-SECTIONAL ARRANGEMENT DRAWING

DRG. Nº 3084 / 4

FIG. 5-20

FIG. No 5-21
Drg. No. D26080
Date 28-7-74

ESTIMATED PERFORMANCE CURVE FOR
2 STROKE LOOP SCAVENGE IDI DIESEL ENGINE.

OPTIMUM PERFORMANCE CONDITIONS.
NOx > 2g/mile HC > 0·4g/mile.

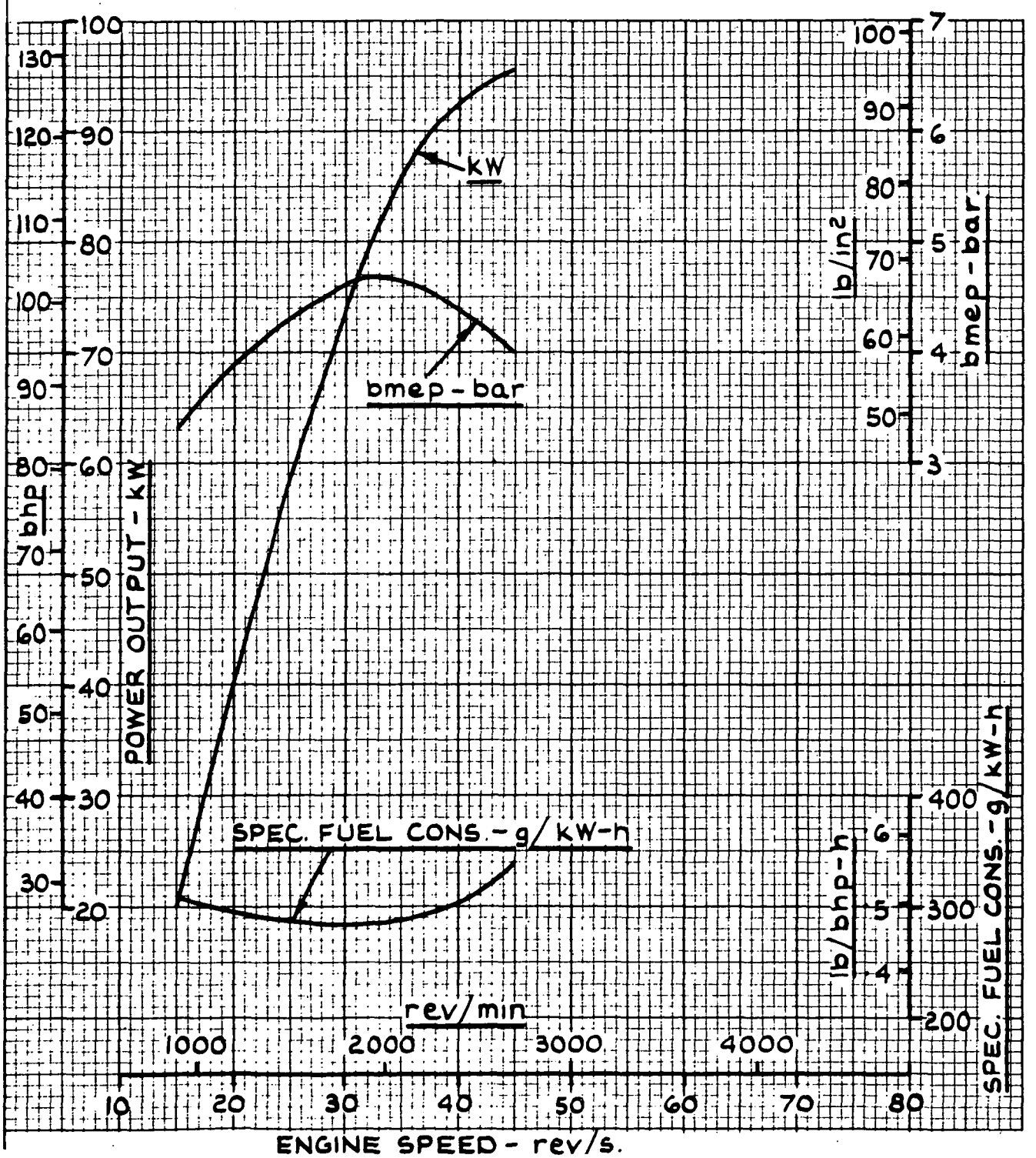

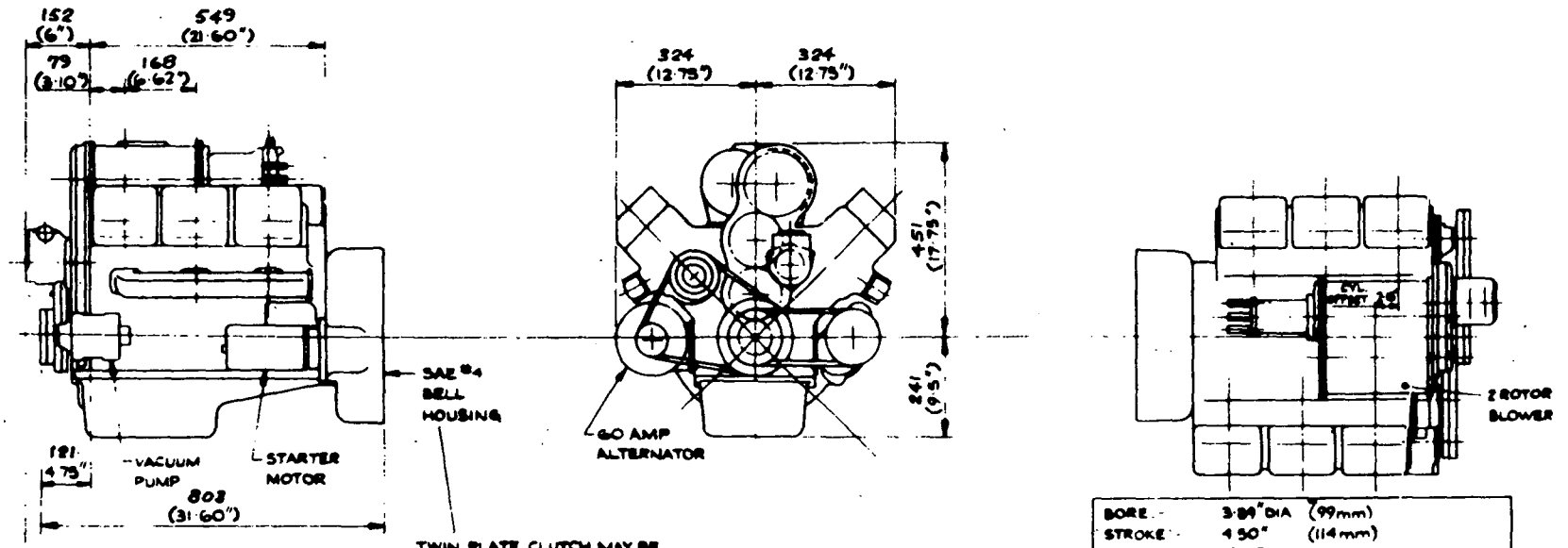

BORE :-	3·89" DIA	(99mm)
STROKE :-	4·50"	(114mm)
B.H.P:-	128 @ 2700 r.p.m	
B.M.E.P.-	68 lb/in² (4·7 BAR) @ 2000 R.P.M.	
P. MAX.-	1600 lb/in² (110 BAR)	
CAPACITY:-	321 C.I.D.	(5·26 Litres)
BOX VOL :-	12·7 cu.ft.	(0·359m³)
EST WEIGHT:-	760 lb.	(340kg)

E.P.A. DIESEL 'IMPACT' PROJECT
PHASE III ENGINE CONFIGURATION STUDY

96 kW LOOP SCAVENGE - I.D.I. 2 STROKE DIESEL ENGINE
INSTALLATION DRAWING

DRG No 30847A

FIG. 5-22

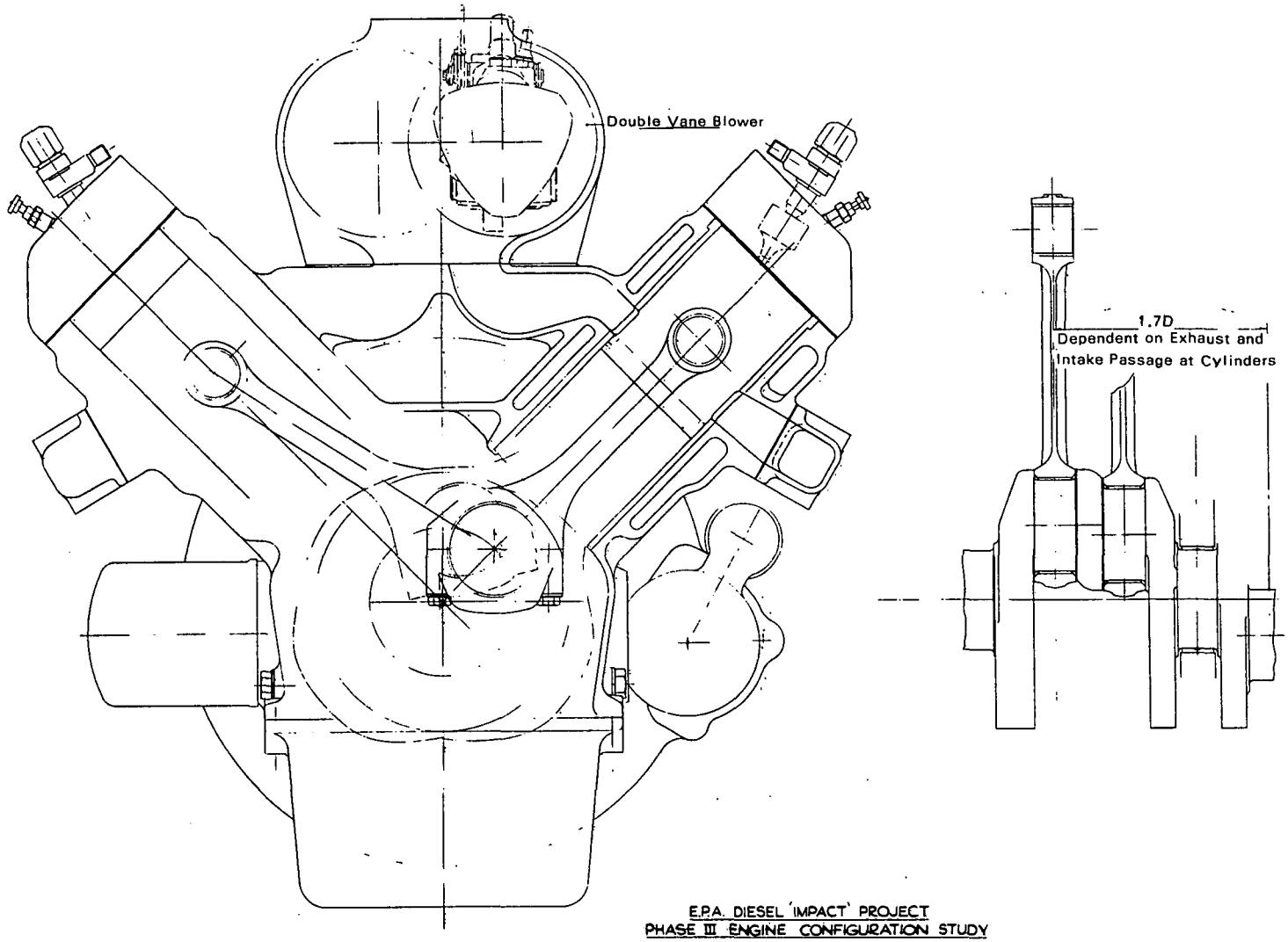

E.P.A. DIESEL 'IMPACT' PROJECT
PHASE III ENGINE CONFIGURATION STUDY
V6 - I.D.I - 2 STROKE LOOP SCAVENGE DIESEL ENGINE
CROSS-SECTIONAL ARRANGEMENT DRAWING

DRG. Nº 3084/6

FIG. 5-23

FIG. No. 5-24
Drg. No D26081
Date 28-7-74

ESTIMATED PERFORMANCE CURVE FOR 2 STROKE THROUGH SCAVENGE D.I. DIESEL ENGINE

OPTIMUM PERFORMANCE CONDITIONS.
NOx > 2g/mile, HC > 0·4g/mile.

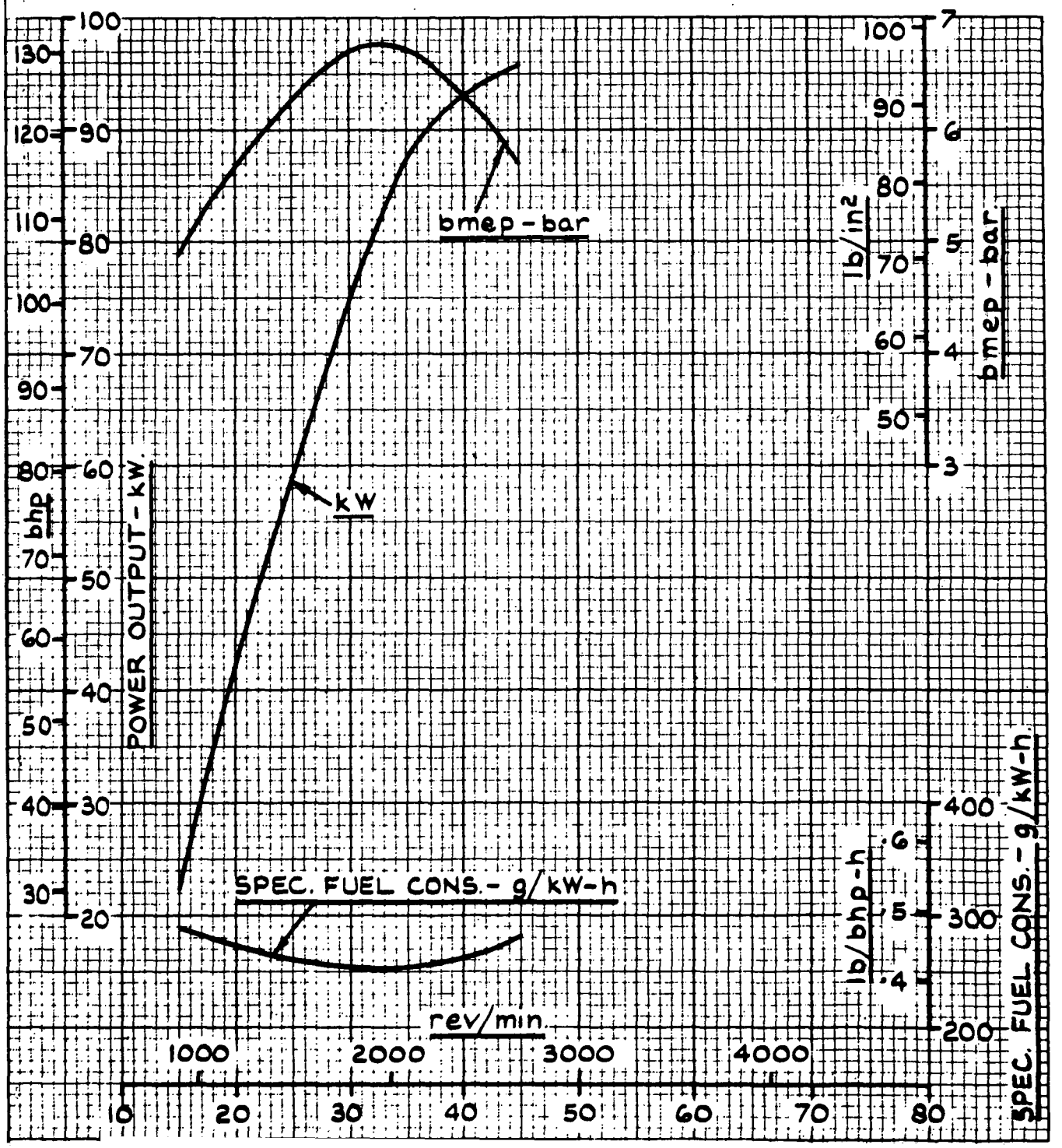

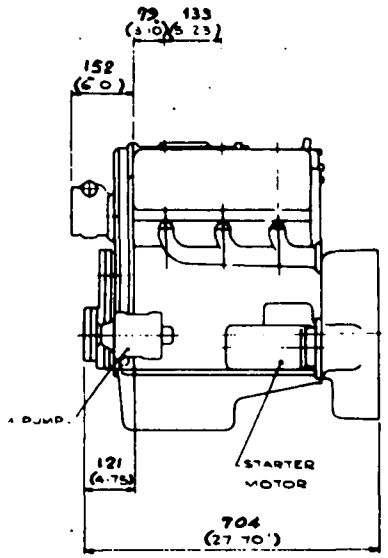

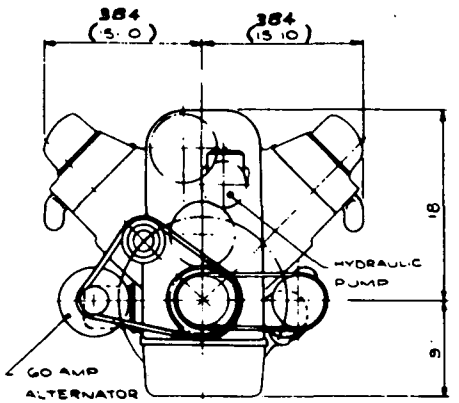

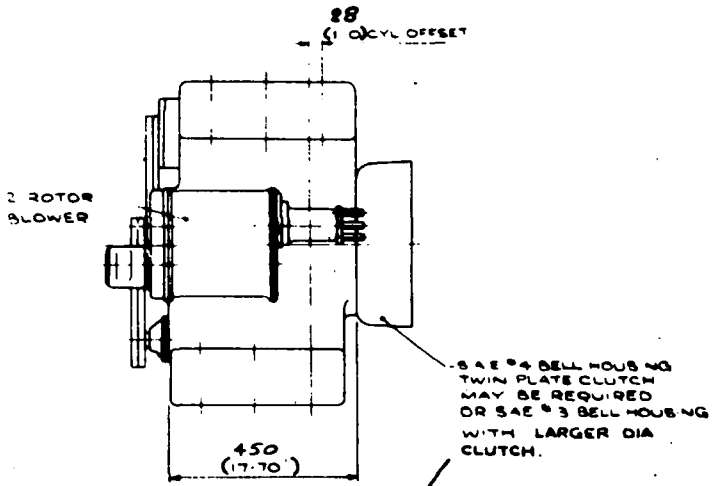

V6 - 2 STROKE THROUGH SCAVENGE D I DIESEL ENGINE

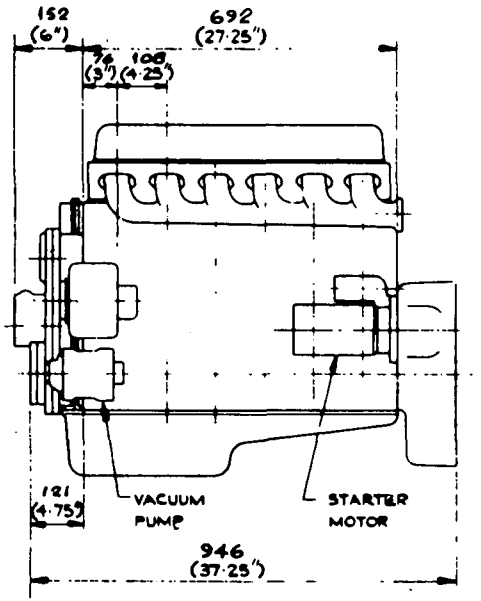

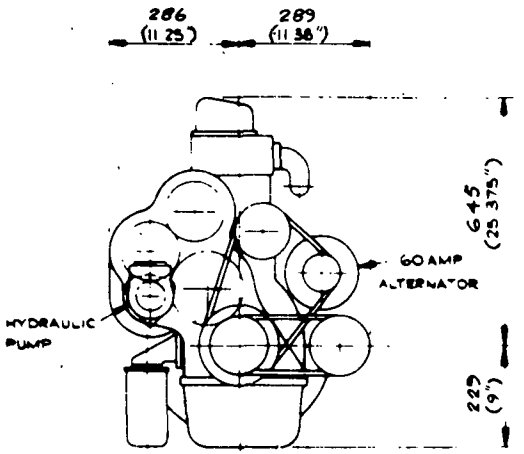

IN LINE 6 CYLINDER - 2 STROKE - THROUGH SCAVENGE D.I DIESEL ENGINE

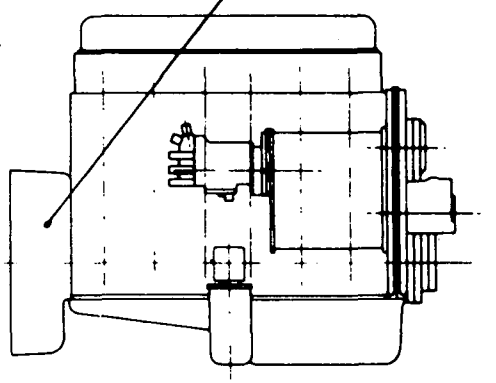

BORE:-	3·28" DIA. (83mm)	
STROKE:-	4·50" (114mm)	
B.H.P:-	128 @ 2700 r.p.m	
B.M.E.P:-	100 lb/in² (6·9 BAR) @ 2000 rpm	
P MAX -	2000 lb/in² (138 BAR)	
CAPACITY:-	228 C.I.D. (3·74 Litres)	
	IN LINE	VEE
BOX VOL:-	16·77 ft³ (·47 m³)	13·66 ft³ (·387 m³)
EST. WEIGHT:-	800 lb (365 kg)	780 lb (354 kg)

E.P.A. DIESEL 'IMPACT' PROJECT
PHASE III ENGINE CONFIGURATION STUDY

96 kW 2 STROKE THROUGH SCAVENGE DIESEL ENGINE
INSTALLATION DRAWING

3084/23

FIG. 5-25

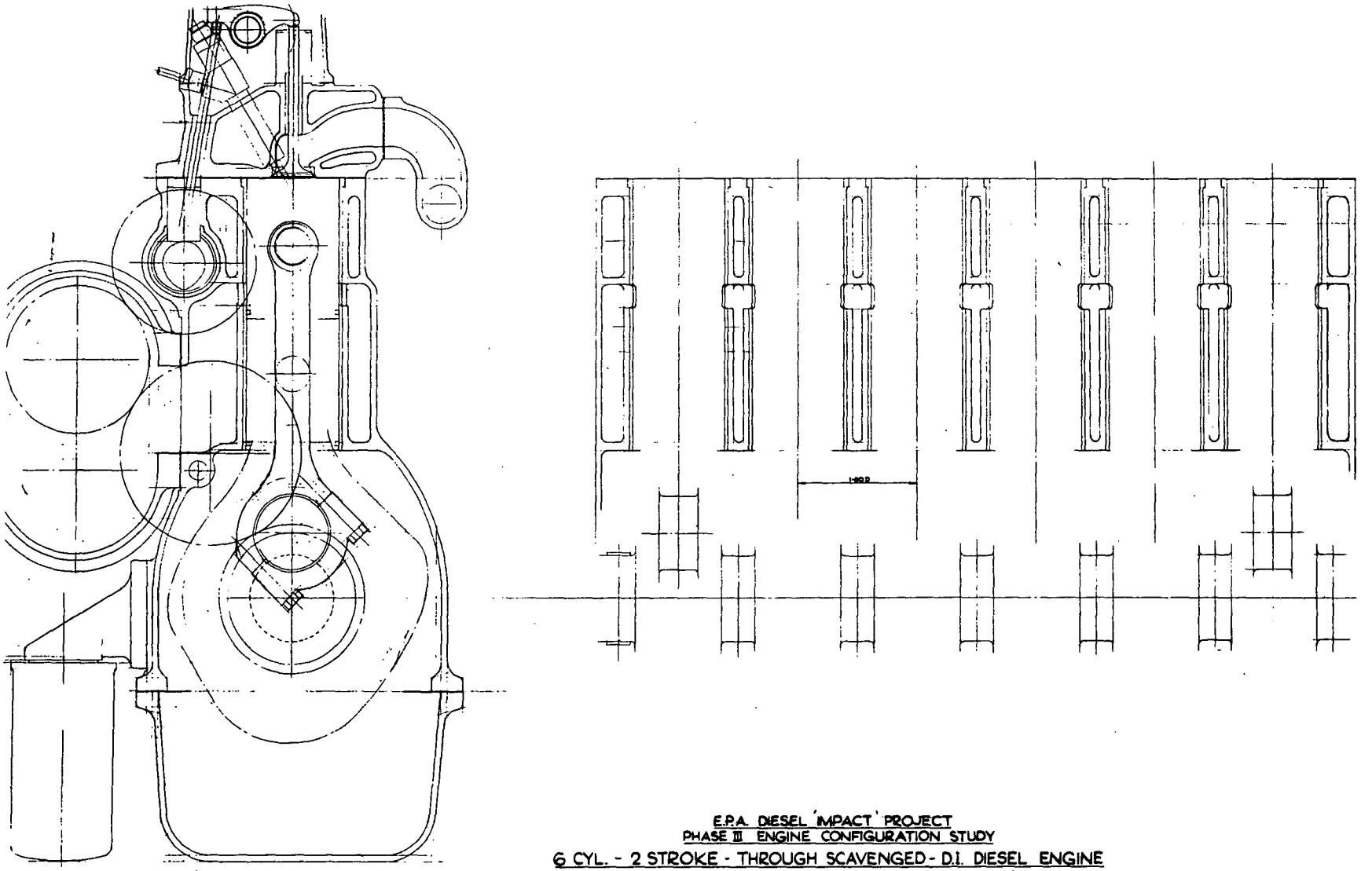

DRG. Nº 3084/16

E.P.A. DIESEL 'IMPACT' PROJECT
PHASE III ENGINE CONFIGURATION STUDY
6 CYL. - 2 STROKE - THROUGH SCAVENGED - D.I. DIESEL ENGINE
CROSS & LONGITUDINAL ARRANGEMENT DRAWING

FIG. 5-26

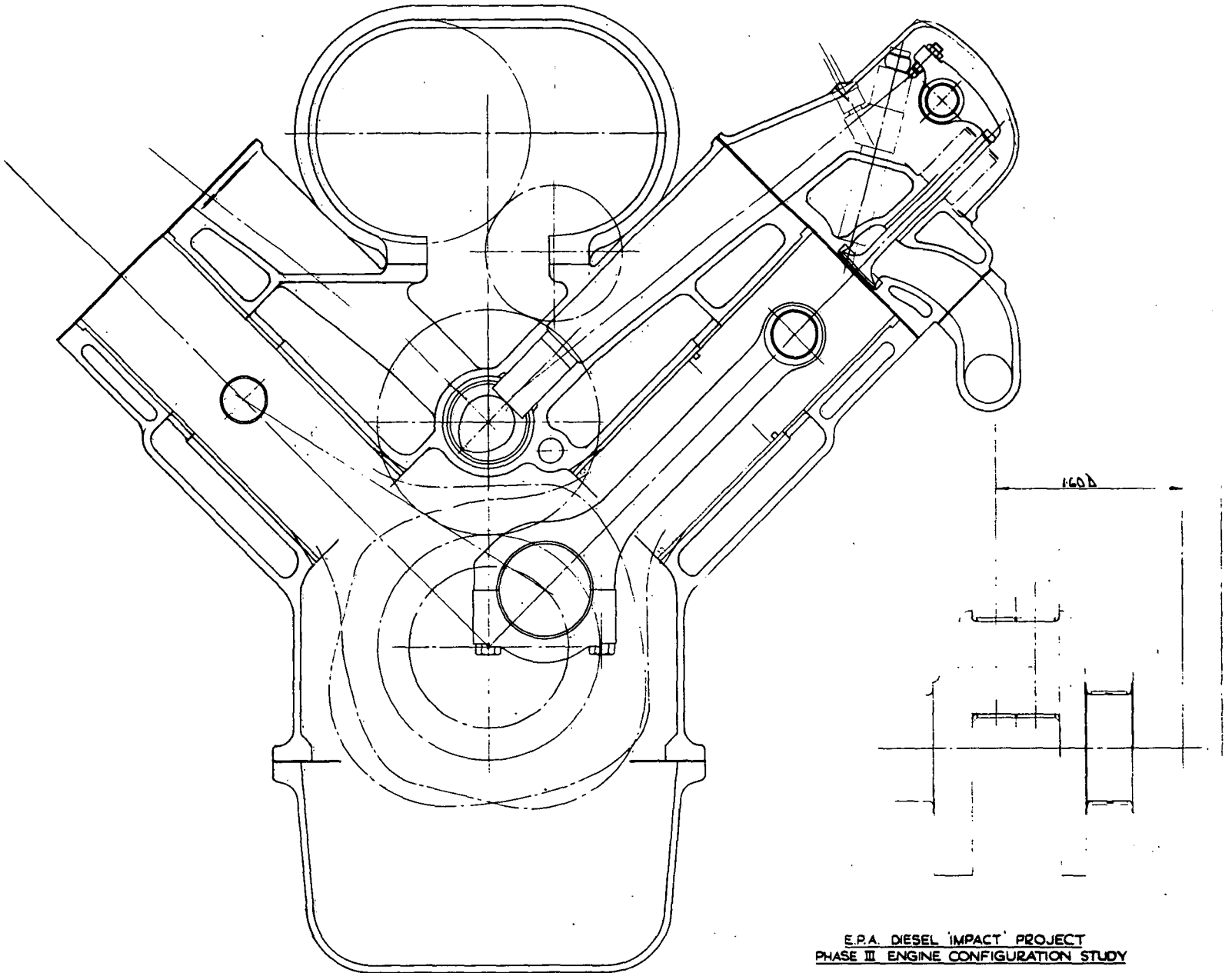

E.P.A. DIESEL 'IMPACT' PROJECT
PHASE III ENGINE CONFIGURATION STUDY

VG 2 STROKE THROUGH-SCAVENGED D.I. DIESEL ENGINE
CROSS & LONGITUDINAL ARRANGEMENT DRAWING

DRG. Nº 3084/21

FIG. 5-27

FIG. No. 5-28
Drg. No. D26082
Date 28-7-74

ESTIMATED PERFORMANCE CURVE FOR FOUR STROKE ϕ 93 x 93 COMPOUND D.I. ENGINE.

OPTIMUM PERFORMANCE CONDITIONS

NOx > 2g/mile HC > 0·4g/mile.

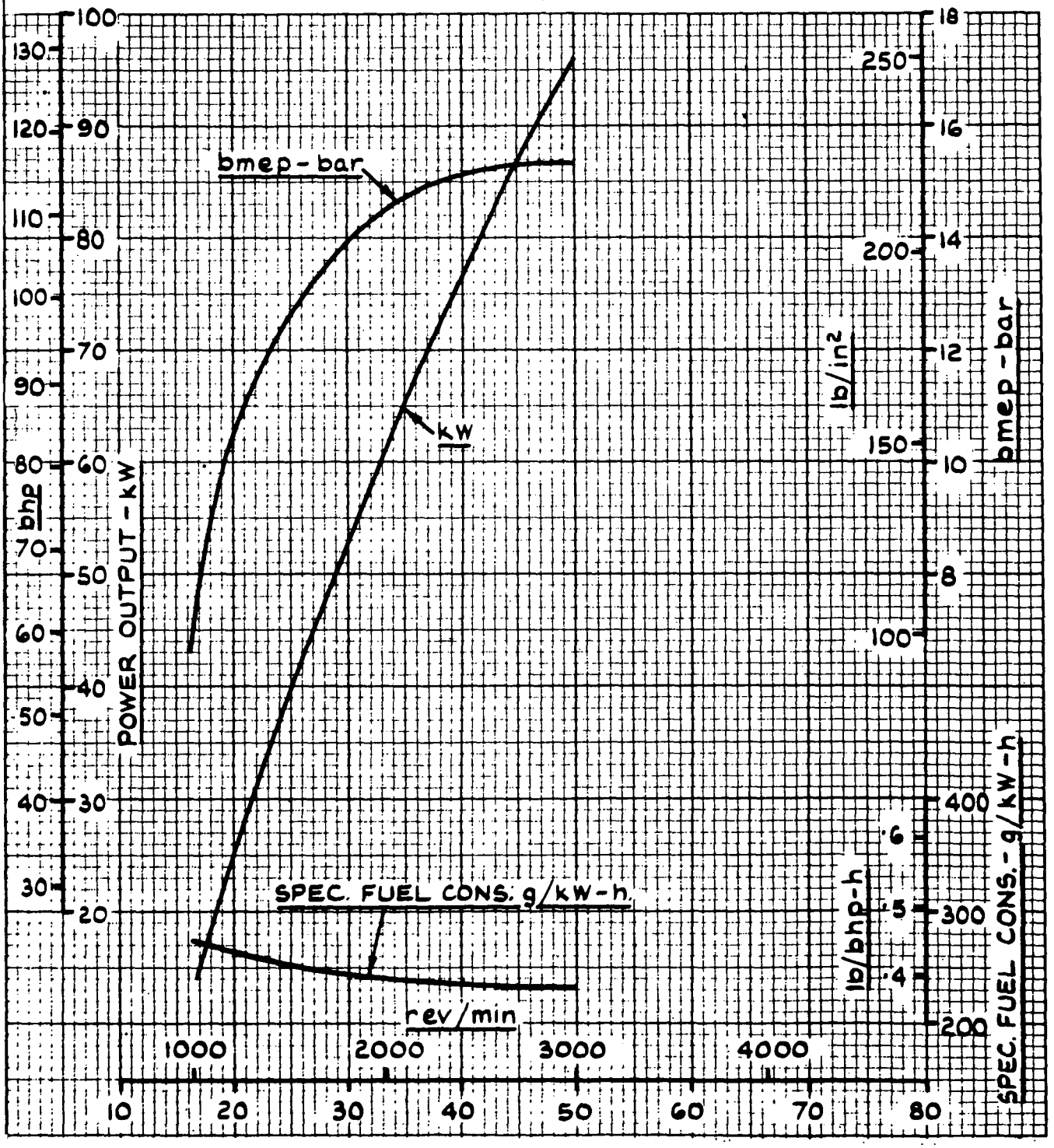

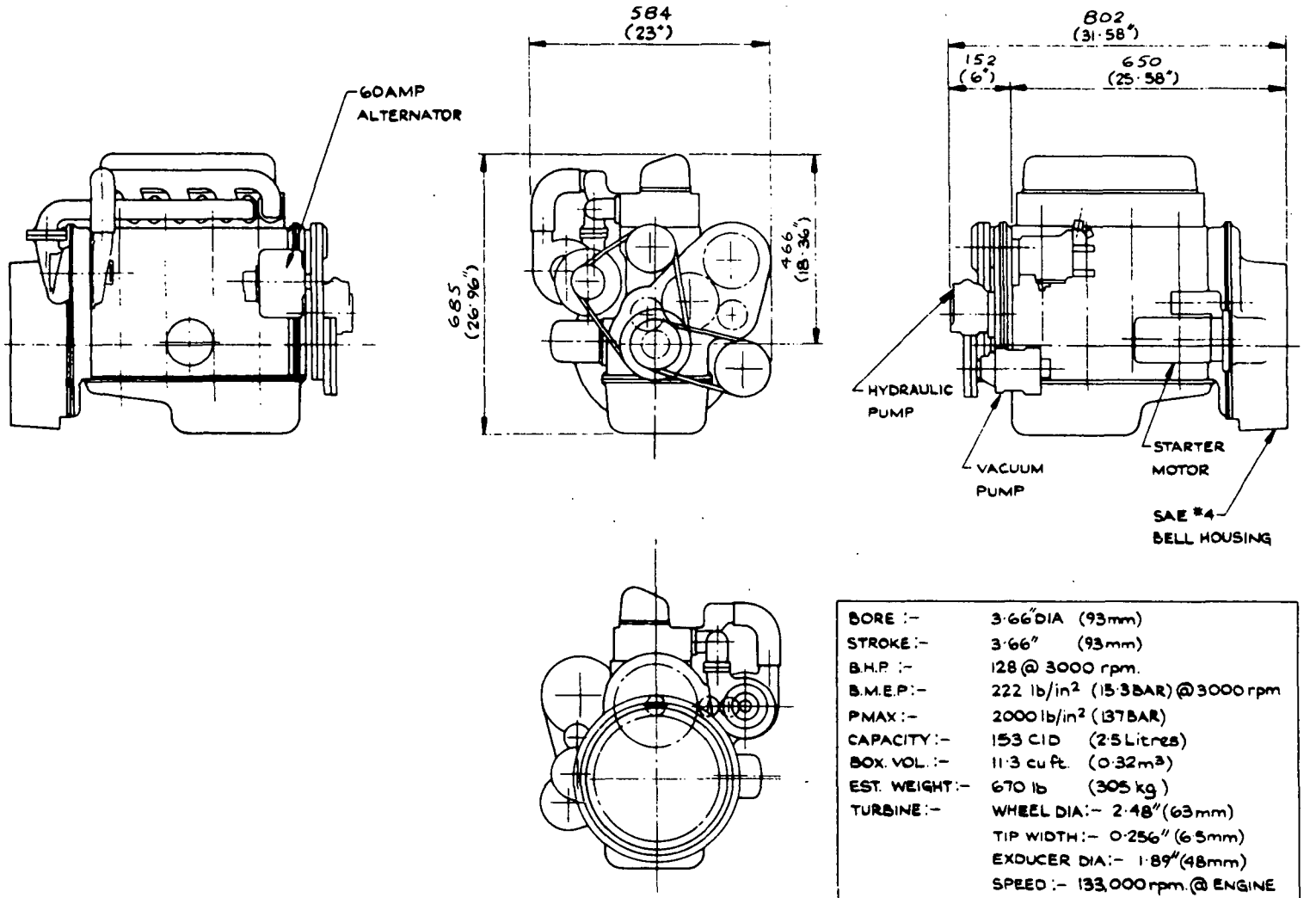

BORE :-	3·66" DIA (93mm)
STROKE :-	3·66" (93mm)
B.H.P. :-	128 @ 3000 rpm.
B.M.E.P :-	222 lb/in² (15·3 BAR) @ 3000 rpm
PMAX :-	2000 lb/in² (137 BAR)
CAPACITY :-	153 CID (2·5 Litres)
BOX. VOL. :-	11·3 cu ft. (0·32 m³)
EST. WEIGHT :-	670 lb (305 kg)
TURBINE :-	WHEEL DIA :- 2·48" (63mm)
	TIP WIDTH :- 0·256" (6·5mm)
	EXDUCER DIA :- 1·89" (48mm)
	SPEED :- 133,000 rpm. @ ENGINE RATED SPEED
COMPRESSOR :-	WHEEL DIA :- 2·68" (68mm)
	PRESSURE RATIO :- 4:1

DRG. No. 3084/18

E.P.A. DIESEL 'IMPACT' PROJECT
PHASE III ENGINE CONFIGURATION STUDY
96 kW COMPOUND IN-LINE 4 CYLINDER D.I. DIESEL ENGINE
INSTALLATION DRAWING

FIG. 5-29

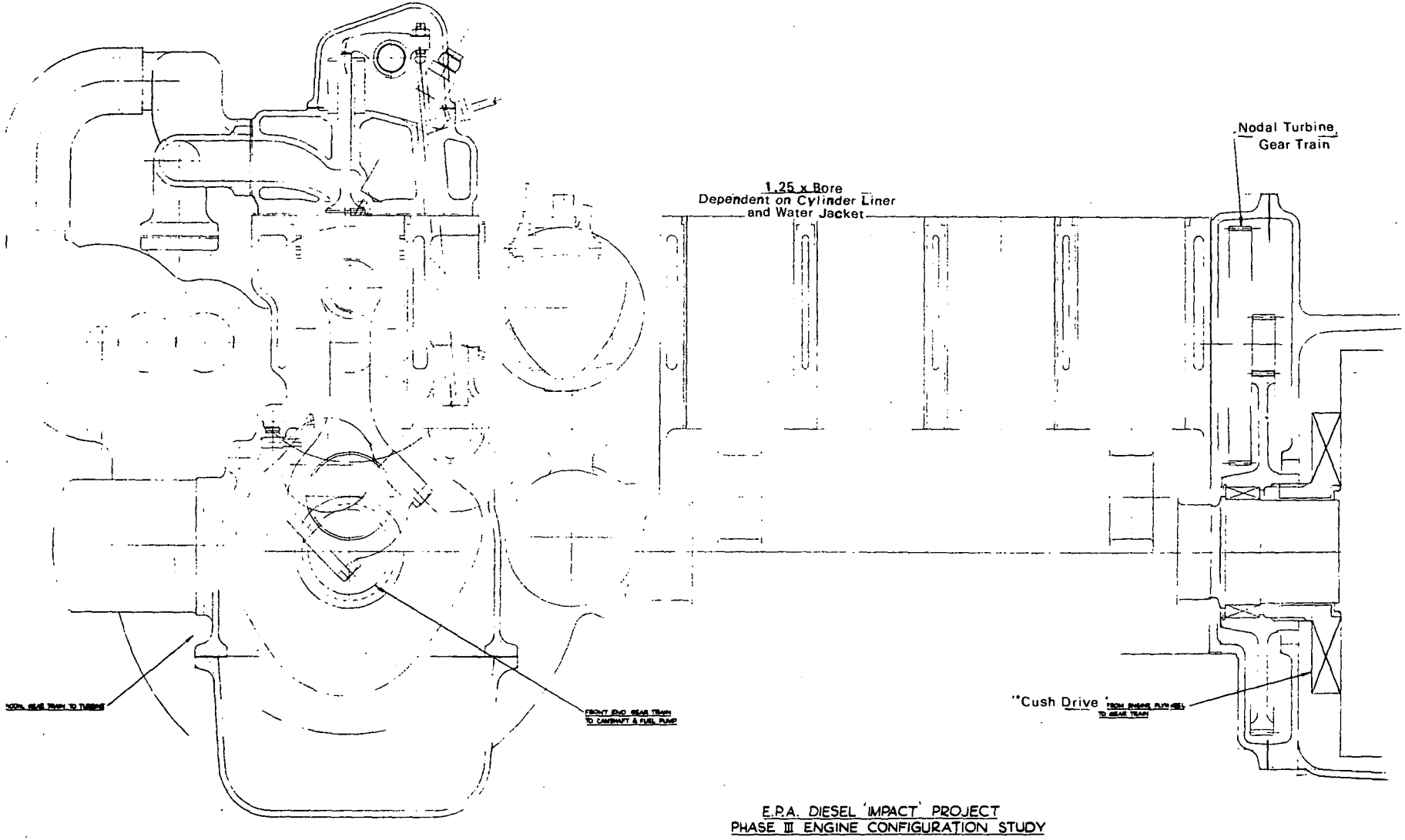

E.P.A. DIESEL 'IMPACT' PROJECT
PHASE III ENGINE CONFIGURATION STUDY

COMPOUND IN-LINE 4 CYLINDER D.I. DIESEL ENGINE
CROSS & LONGITUDINAL ARRANGEMENT DRAWINGS.

DRG. Nº 3084/17

FIG. No 5·31
Drg. No D26083
Date 28-7-74

ESTIMATED PERFORMANCE CURVE FOR TWO STAGE ROTARY DIESEL ENGINE.

OPTIMUM PERFORMANCE CONDITIONS

NOx > 2g/mile HC > 0·4 g/mile

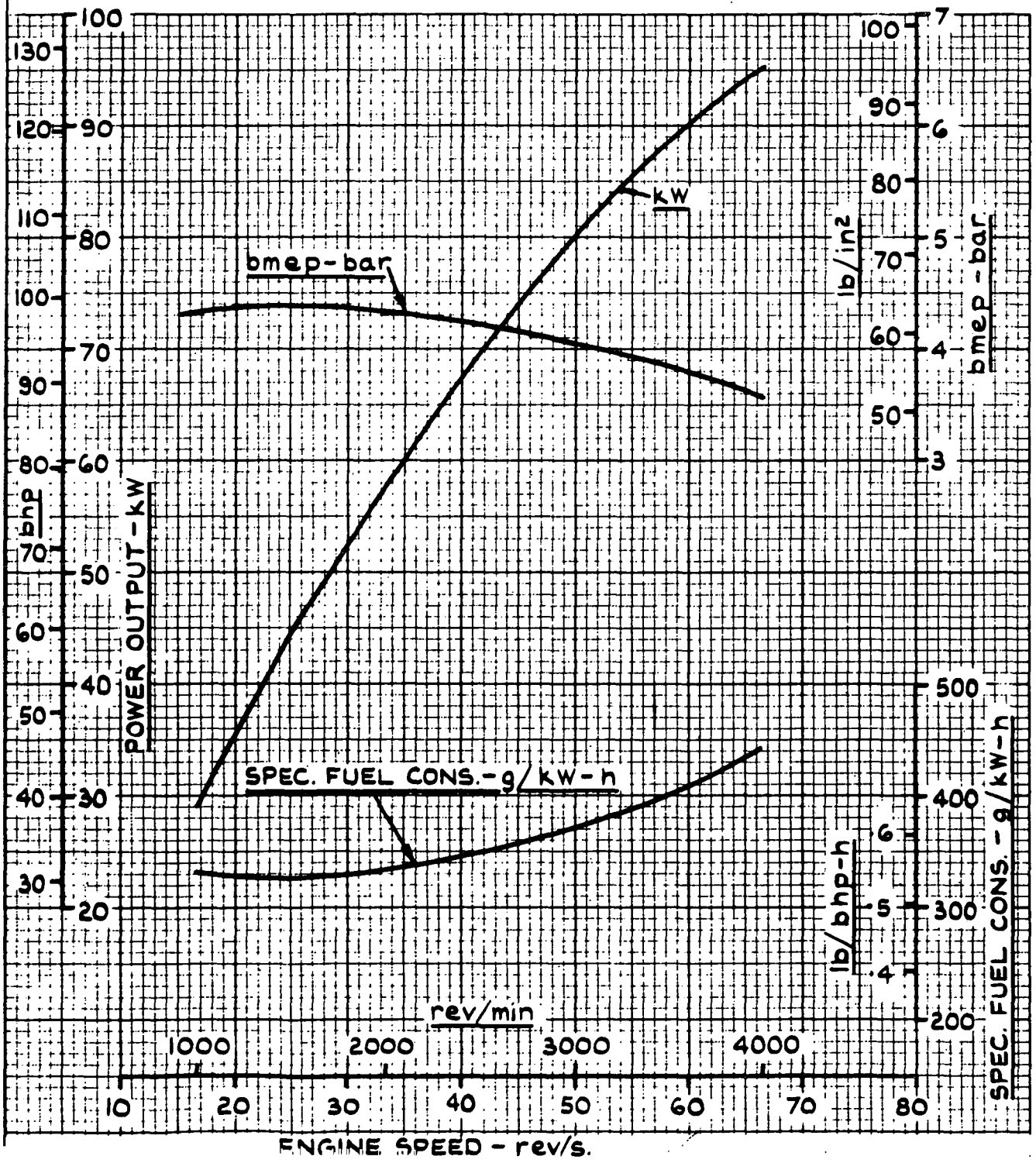

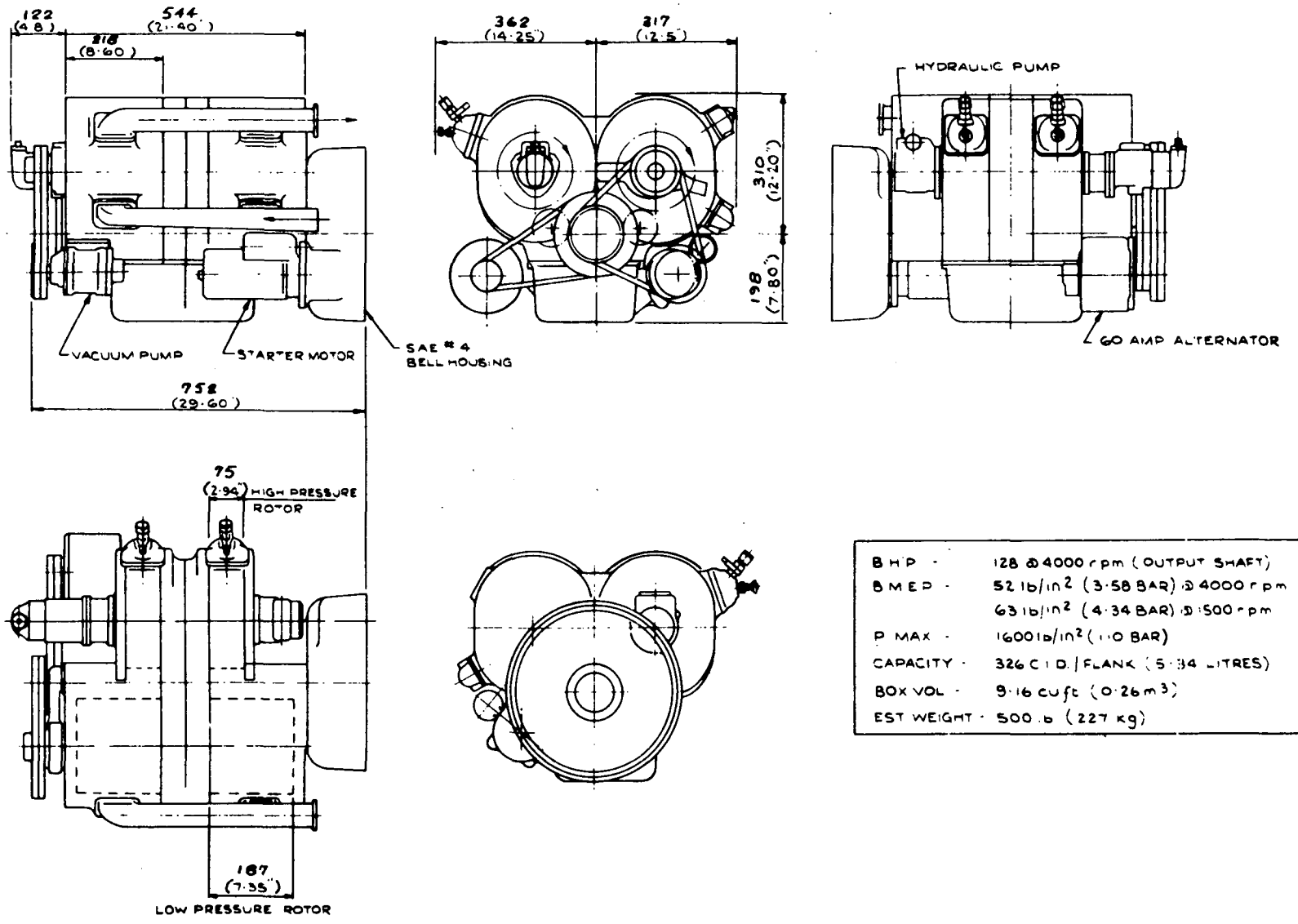

B H P -	128 @ 4000 r p m (OUTPUT SHAFT)
B M E P -	52 lb/in² (3·58 BAR) @ 4000 r p m
	63 lb/in² (4·34 BAR) @ 1500 r p m
P MAX -	1600 lb/in² (110 BAR)
CAPACITY -	326 C I D / FLANK (5·34 LITRES)
BOX VOL -	9·16 cu ft (0·26 m³)
EST WEIGHT -	500 lb (227 kg)

DRG No. 3084/10

E.P.A. DIESEL IMPACT PROJECT
PHASE III ENGINE CONFIGURATION STUDY
96 kW 2 STAGE / 2 BANK I.D.I ROTARY DIESEL ENGINE

FIG. 5-32

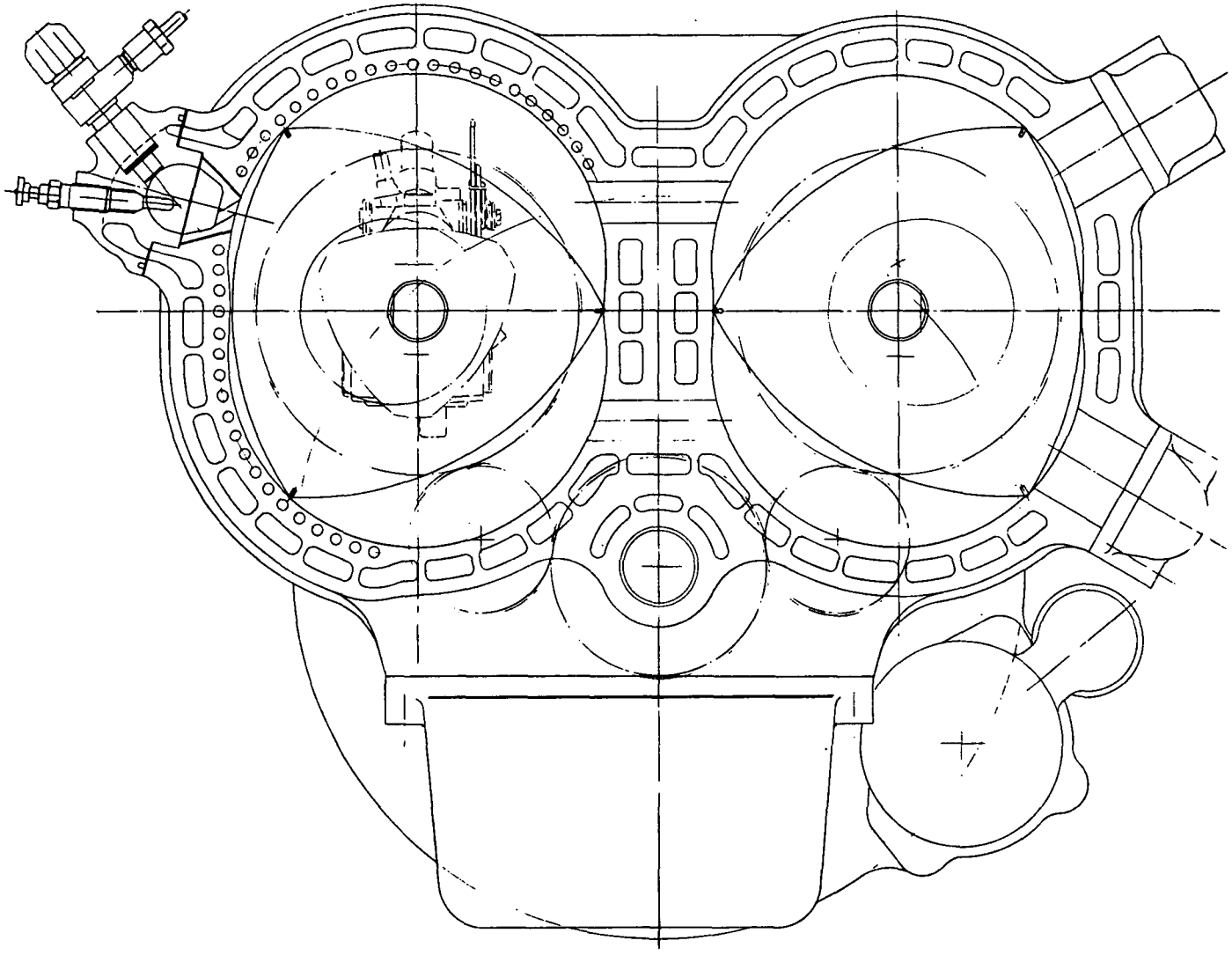

E.P.A. DIESEL IMPACT PROJECT
PHASE III ENGINE CONFIGURATION STUDY
2 STAGE/2 BANK I.D.I. ROTARY DIESEL ENGINE
PRELIMINARY CROSS SECTIONAL ARRANGEMENT DRG.

DRG. Nº 3084/19

FIG. 5-33

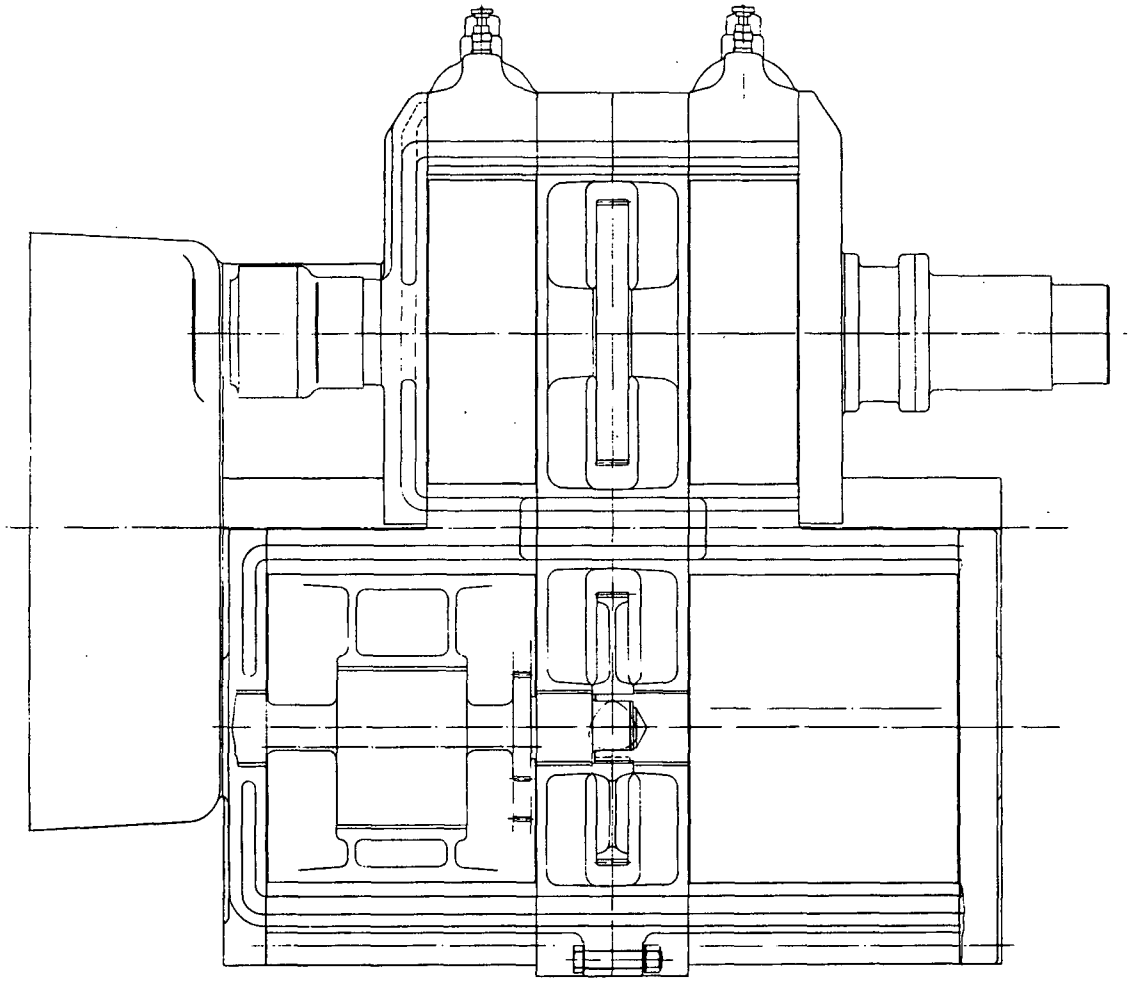

E.P.A. DIESEL IMPACT PROJECT
PHASE III ENGINE CONFIGURATION STUDY
2 STAGE / 2 BANK I.D.I. ROTARY DIESEL ENGINE
PRELIMINARY LONGITUDINAL ARRANGEMENT DRG.

DRG. Nº 3084/20

FIG. 5-34

FIG. No. 5-35
Drg. No. D26092
Date 28-7-74

NATURALLY ASPIRATED 96 kW V8 IDI ENGINE

PREDICTED HC ppm LEVELS IN LOW EMISSIONS BUILD

NOTE: THE ppm LEVELS SHOWN HERE COULD NOT BE GUARANTEED FROM THE PROTOTYPE VEHICLE.

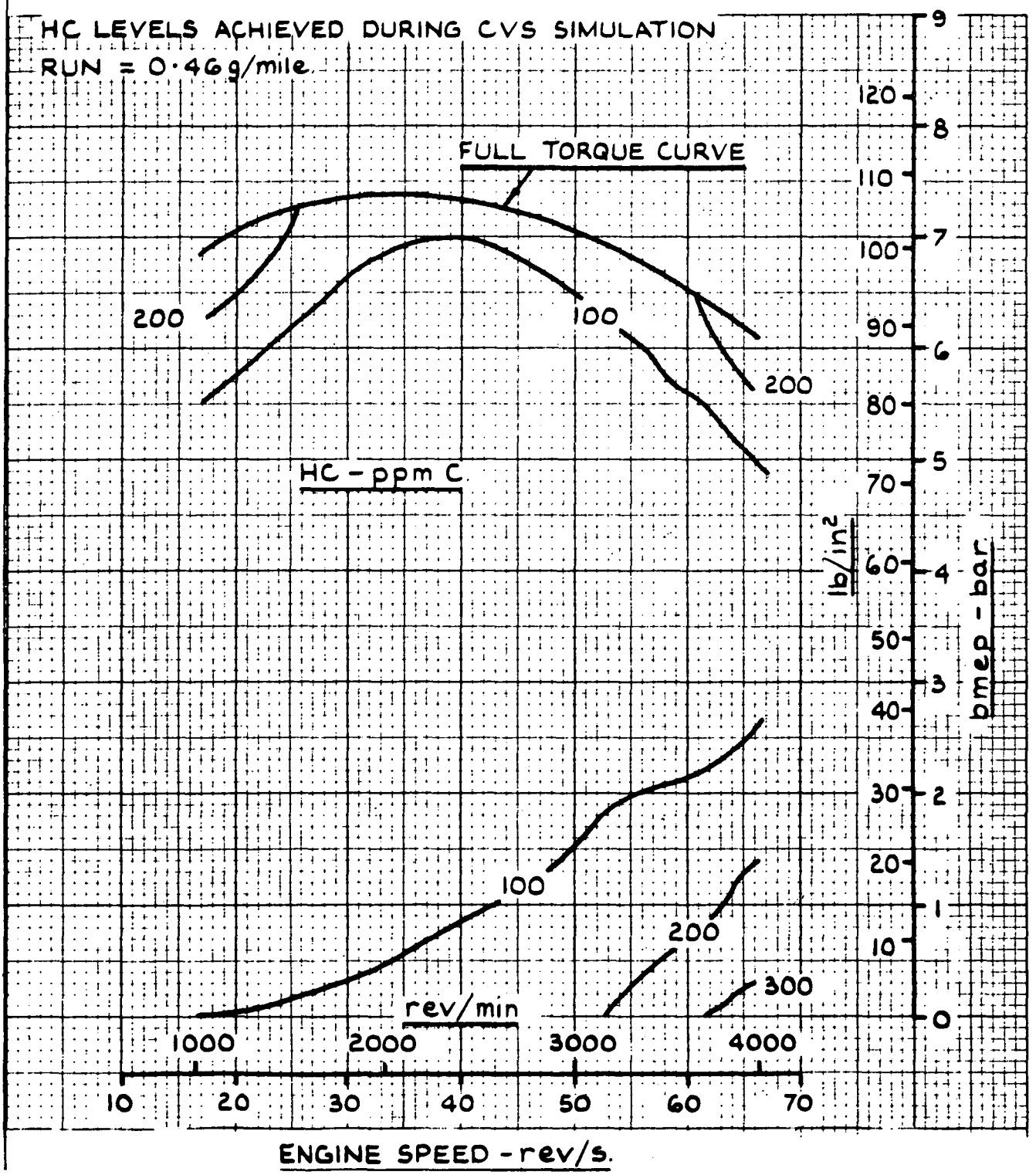

FIG. No. 5-36
Drg. No. D26094
Date 28-7-74

NATURALLY ASPIRATED 96 kW V8 IDI ENGINE

PREDICTED NOx ppm LEVELS IN LOW EMISSIONS BUILD.

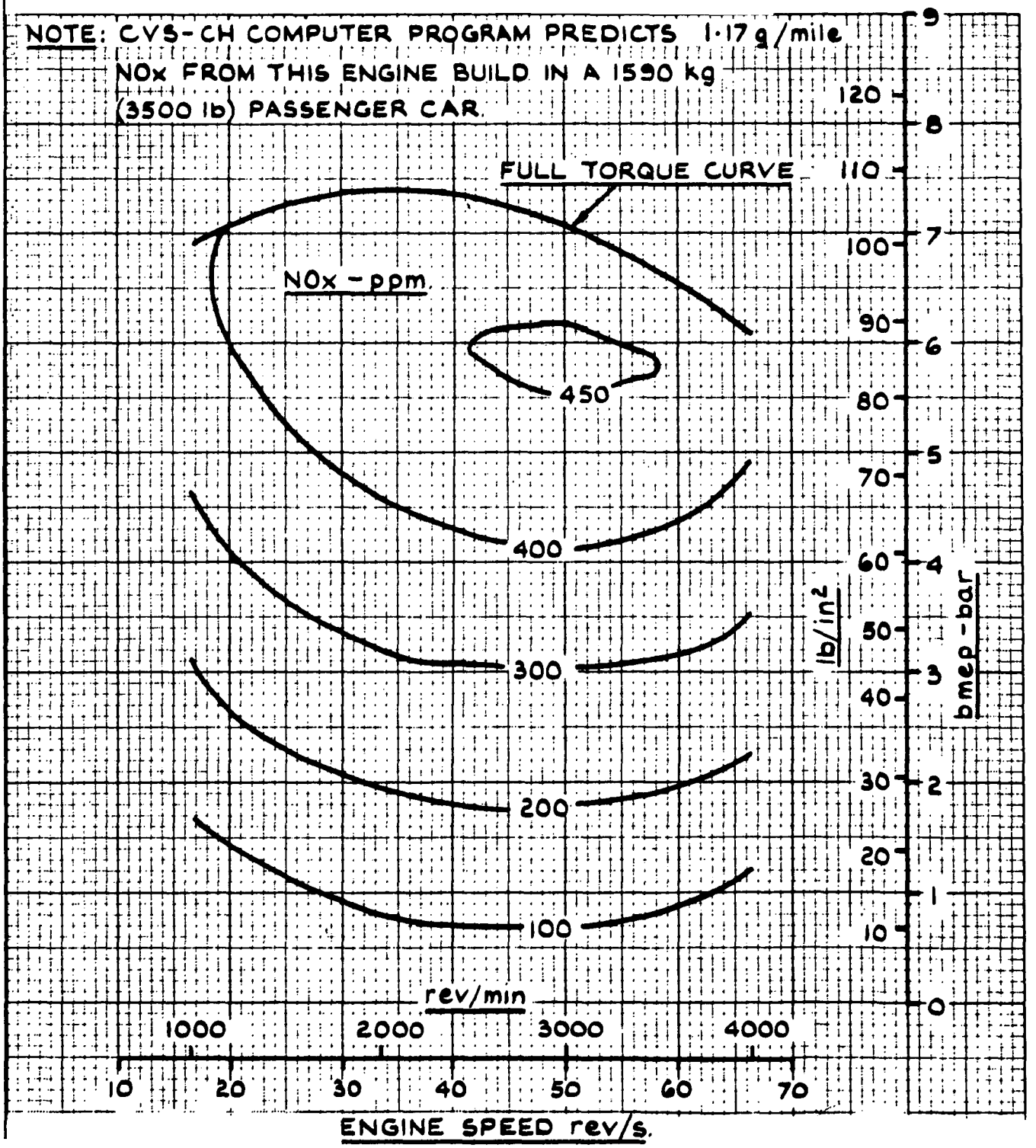

FIG. No. 5·37
Drg. No. D 26095
Date 28-7-74

NATURALLY ASPIRATED 96 kW V8 IDI ENGINE
PREDICTED HC ppm LEVELS USING CURRENT
FUEL INJECTION EQUIPMENT.

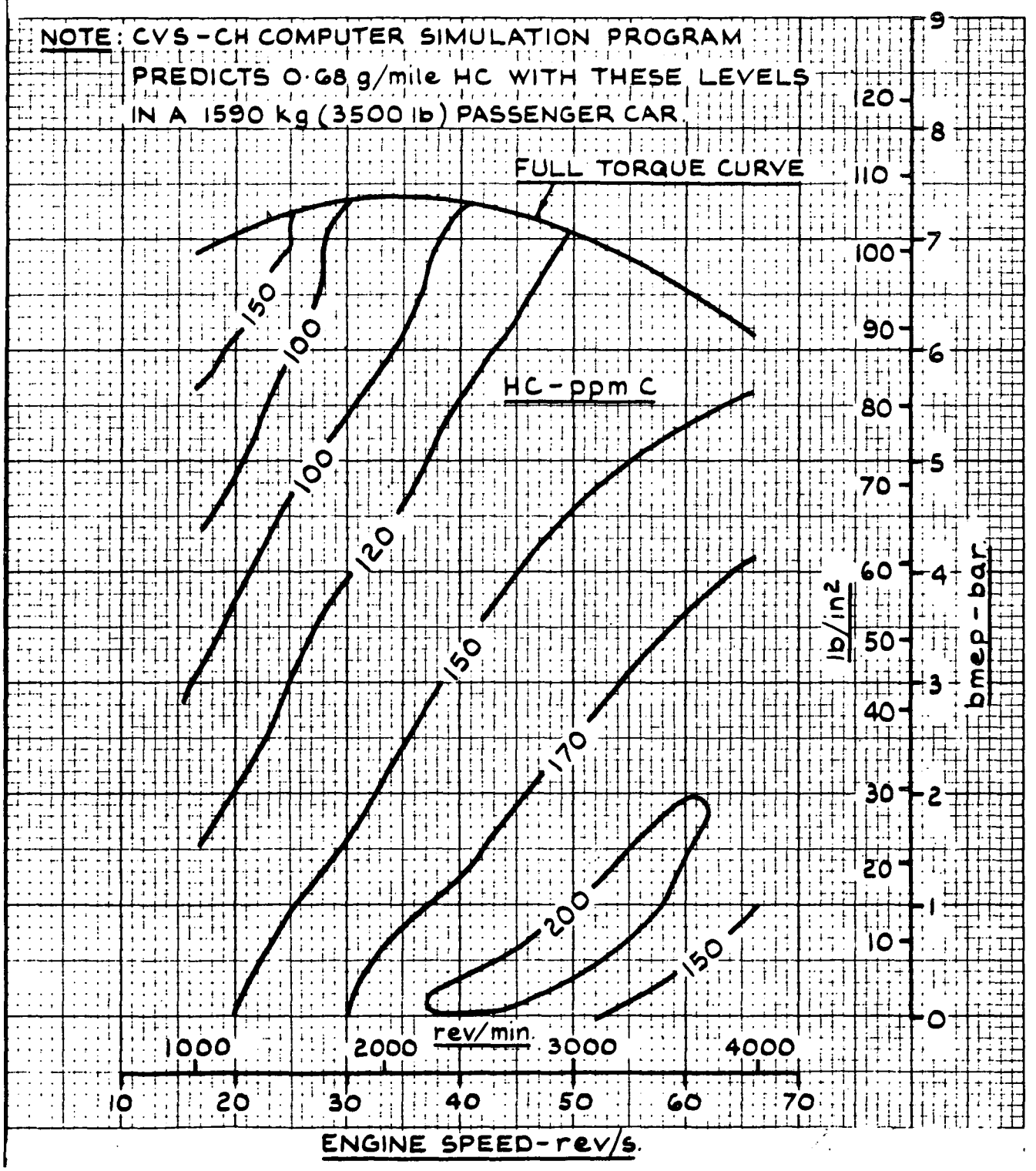

FIG. No. 5-38
Drg. No. D26096
Date 28-7-74

NATURALLY ASPIRATED 96 kW V8 IDI ENGINE

PREDICTED NOx ppm LEVELS IN OPTIMUM PERFORMANCE BUILD.

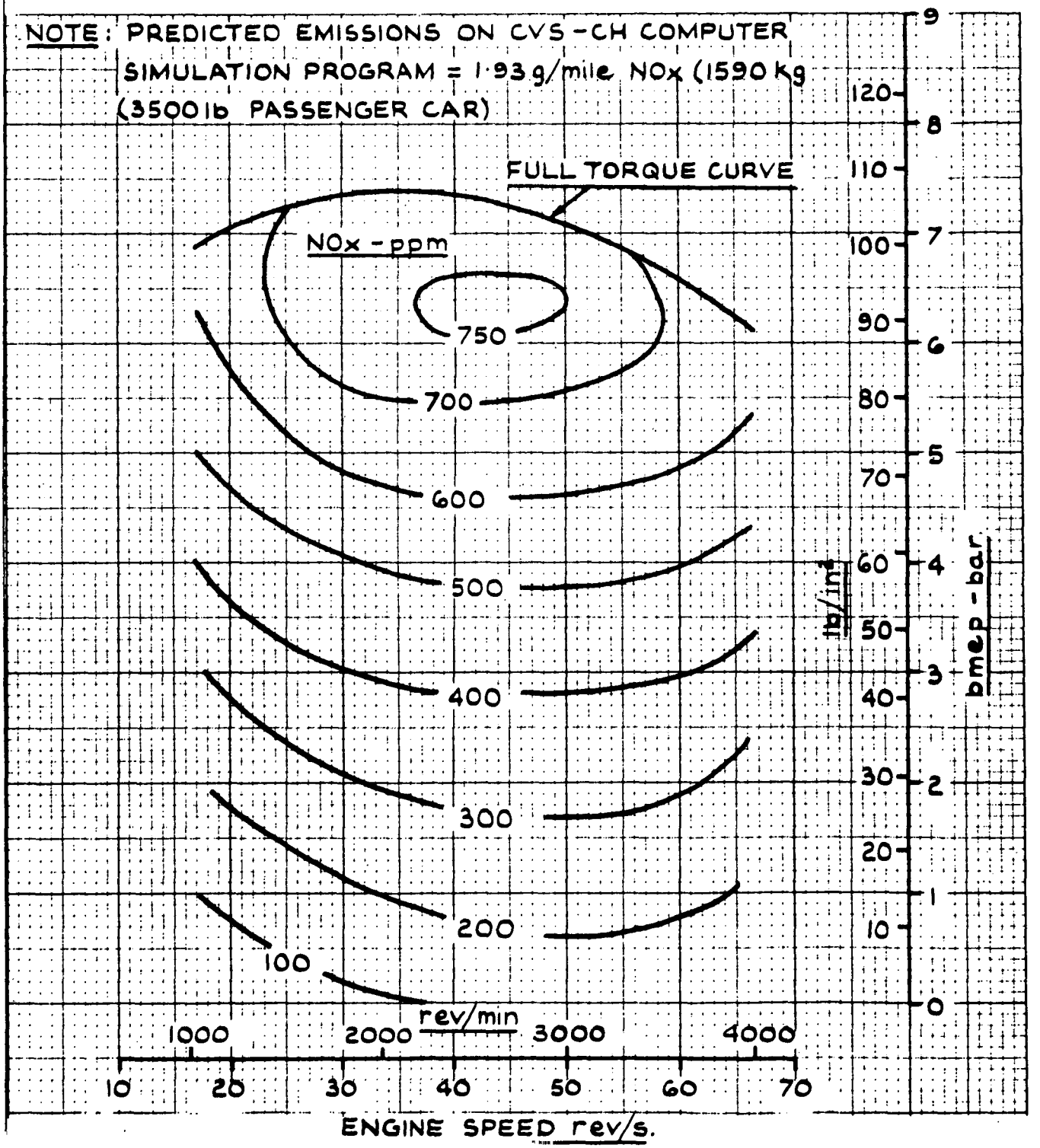

FIG. No. 5-39
Drg. No. D26088
Date 28-7-74

TYPICAL HC EMISSIONS FROM A LIGHTLY BOOSTED CONVENTIONAL DI IN OPTIMUM PERFORMANCE BUILD.

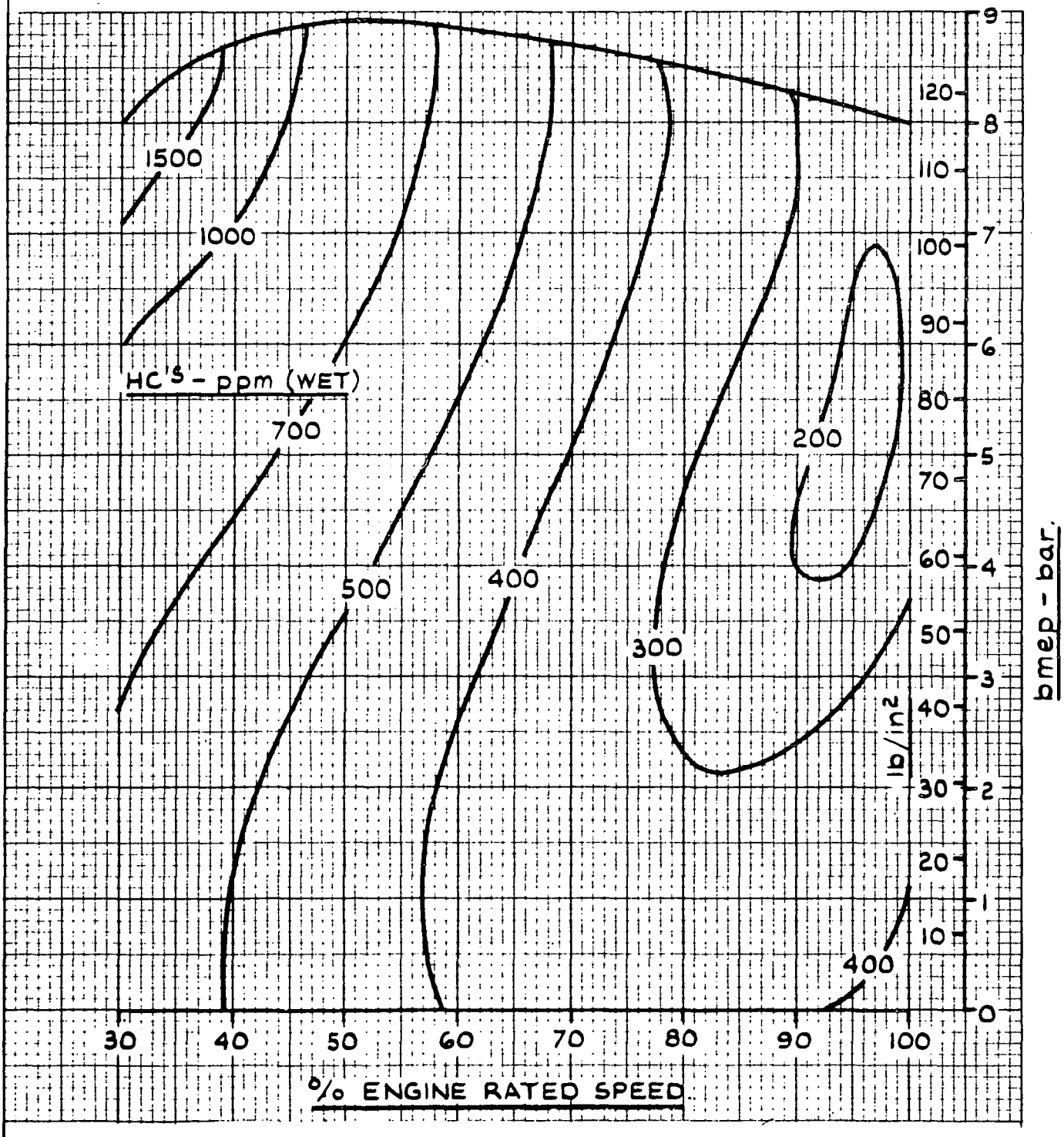

FIG. Nr 5-40
Drg. No. D26089
Date 28-7-74

TYPICAL NOx EMISSIONS FROM A LIGHTLY BOOSTED CONVENTIONAL D.I. ENGINE IN OPTIMUM PERFORMANCE BUILD.

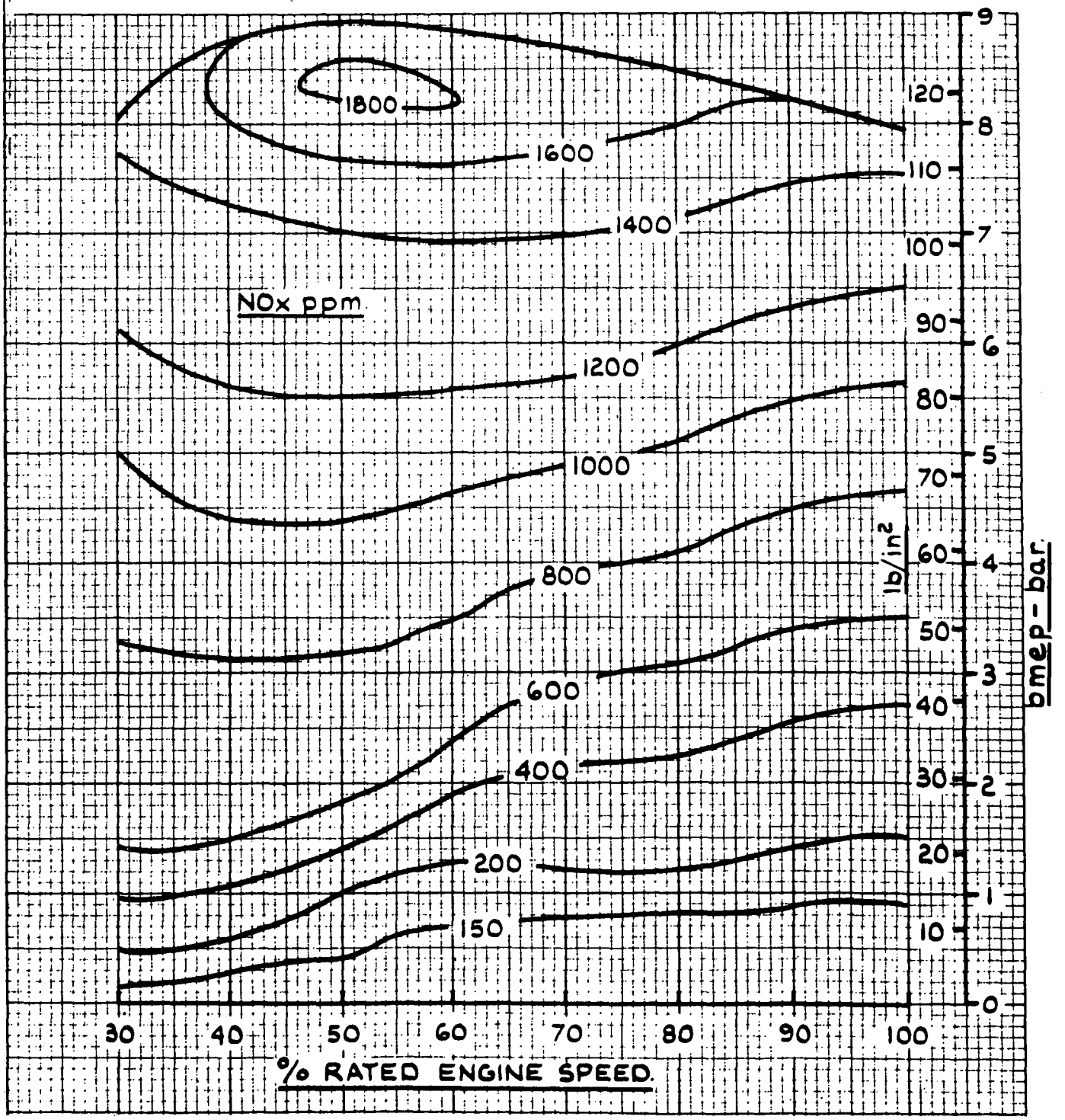

FIG. No. 5-41
Drg. No. D26091
Date 28-7-74

TYPICAL HC EMISSIONS FROM A LIGHTLY BOOSTED COMET V ENGINE IN OPTIMUM PERFORMANCE BUILD.

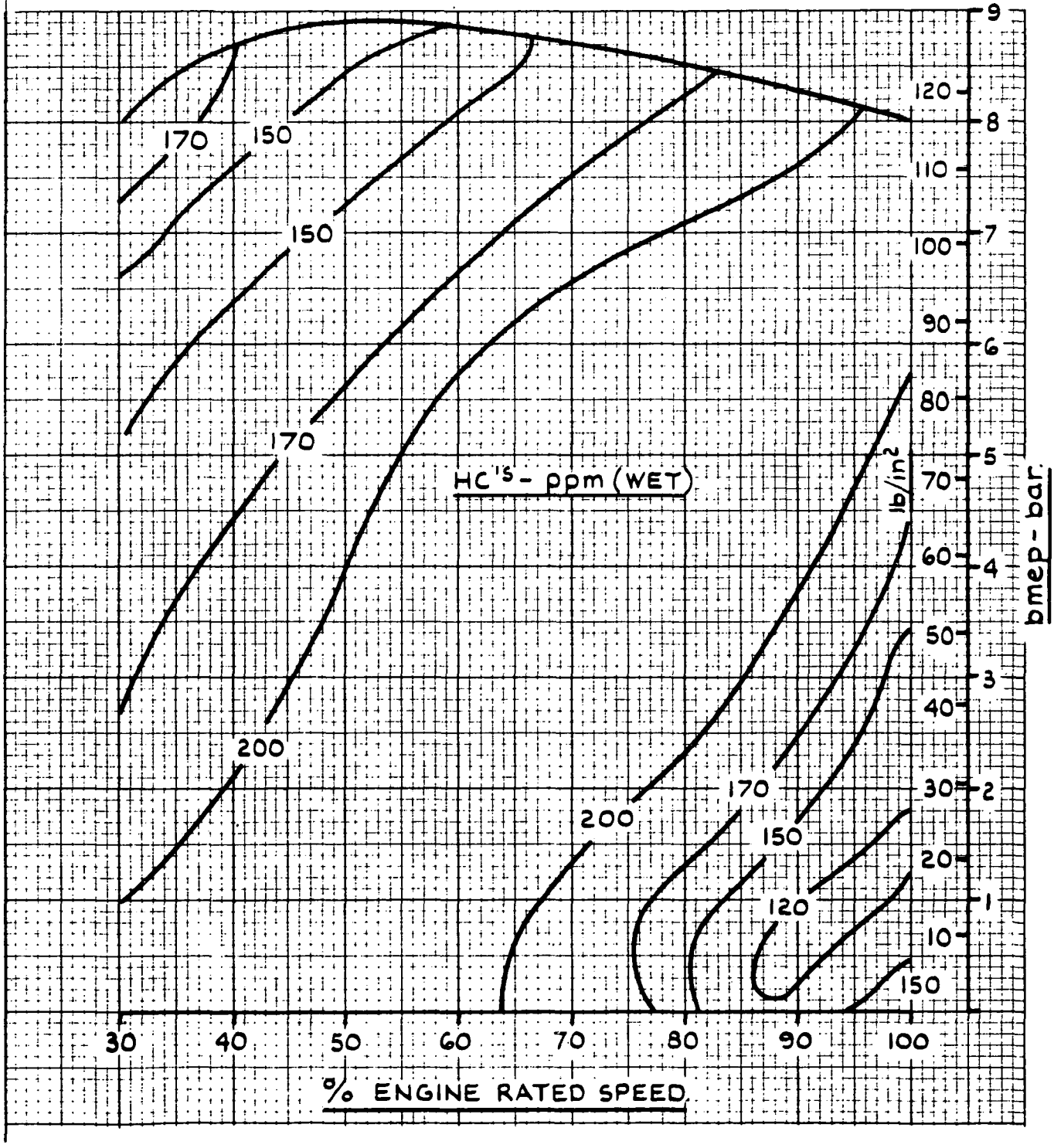

FIG No. 5-42

Drg No. D26090

Date 28-7-74

TYPICAL NOx EMISSIONS FROM A LIGHTLY BOOSTED COMET V ENGINE IN OPTIMUM PERFORMANCE BUILD

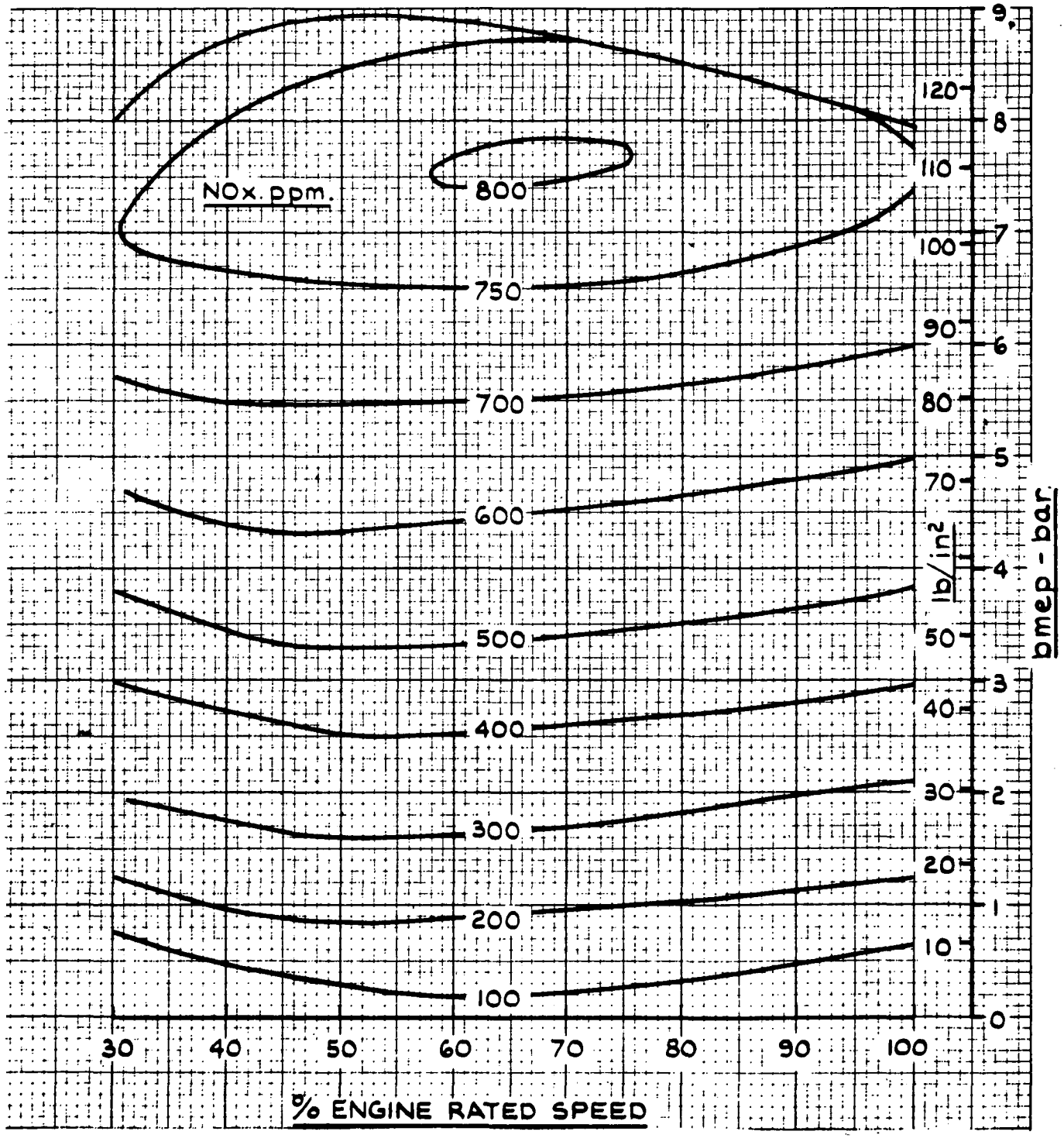

SECTION 6

POWER PLANT RATING

The quantitative comparison of different power plants was one of the major aims of the study. This section describes the rating methodology which was developed, how it was applied to the eleven potentially viable power plants and the results of that application.

The rating methodology involves the identification of performance aspects or requirements for a power plant. Each aspect is given a weighting indicating its relative importance. Each power plant is then given a 'rating' indicating how well it met the requirements of each performance aspect. Multiplication of each 'rating' by the appropriate 'weighting' and summation of the products then gives a numerical 'overall rating'. Comparison of the 'overall ratings' allows the power plants to be compared on a numerical basis.

The individual ratings for each performance aspect for each power plant are listed and the reasons for these ratings are discussed.

The 'overall ratings' indicated that the gasoline engines were some 10% superior to the diesel engines for an average light duty application in the primary emissions environment (HC - 0.41 g/mile, CO - 3.4 g/mile, NO_x - 1.5 g/mile.) The results, however, indicated that greater weighting on fuel consumption and certain other economic and durability aspects would make the diesel at least as attractive as the gasoline engine. Only the four-stroke IDI diesel power plants were viable, all the other diesel variants being incapable of meeting the emissions targets.

Since it was considered that none of the diesel power plants could meet the secondary emissions targets (HC - 0.41 g/mile, CO - 3.4 g/mile, NO_x - 0.4 g/mile), no attempt was made to carry out the rating exercise for this secondary environment.

Introduction

One of the major aims of the study was that a methodology should be derived which would allow a quantitative assessment of the relative merits of various power plants for light duty vehicle use. Although the study was concerned only with a comparison of gasoline and diesel configurations the methodology was developed so that it could be applied to any liquid hydrocarbon power plant and thus should be of value in other similar studies.

The advantages of such a methodology are that its application will allow a direct quantitative rating of various power plants and that it should also be possible to identify those factors and aspects which render a particular power plant suitable for a particular duty. The second advantage allows an assessment of changes in a particular area as well as highlighting areas worthy of effort to make a particular configuration more suitable for use in a given environment.

Approach of Rating System

The fitness of any power plant for a given duty is a combination of the excellence with which it meets various performance aspects or requirements and the relative importance of those individual aspects. The application of any rating system must thus involve five stages:

1) Identification of performance aspects
2) Estimation of relative importance of those aspects
3) Estimation of how well a particular power plant meets a performance aspect
4) Assessment of overall merit of that power plant
5) Comparison with overall merit of other power plants

Performance Aspects

The fitness of a power plant for light duty use can be assessed under the following broad headings:

a) Emissions
b) Package (Size, weight, etc.)
c) Costs
d) Nature (Driveability)
e) Others (Convenience and minor safety aspects)

Unfortunately these headings are much too broad for a detailed assessment of different power plants and a more detailed list of performance aspects was drawn up such that the various aspects would cover all facets of light duty vehicle power plants when fuelled by liquid hydrocarbons. The individual performance aspects are as follows:

1. Smoke
2. Particulates
3. Odour
4. NO_x
5. HC
6. CO
7. SO_2
8. HC reactivity
9. Evaporative emissions
10. Misc. emissions
11. Drive-by Noise
12. Package volume
13. Package weight
14. Fuel economy
15. Fuel
16. Vehicle first cost
17. Maintenance cost
18. Startability
19. Hot driveability
20. Cold driveability
21. Torque rise
22. Durability
23. Coolant heat loss
24. Fire risk
25. Idle noise
26. Vibration and torque recoil

It will be seen that although the performance aspects are generally those studied in the literature survey certain others have been added so that the rating methodology would be complete.

Relative Importance of Performance Aspects

If the summated importance of all the performance aspects is 100 then each individual aspect can be assigned a numerical importance or ''weighting'. For this study a committee of six Ricardo personnel was selected and they were asked to assign a 'weighting' to each of the performance aspects. Although the committee members were selected so that each member had experience and knowledge of both the emissions field and the American auto-

motive situation it was felt that the corporate results may have carried a bias and it was thus decided to try to eliminate this bias. A further group of eighteen persons was then selected (again with experience of emissions and American automotive conditions) and this group of people was asked to assign weightings in isolation. A comparison of this survey and committee results (Fig. 6-1) shows that although there was general agreement between the two, discrepancies were sufficient to indicate that there may well have been slight committee bias and thus the survey figures were adopted for this study. These weightings are shown in Table 1 below.

TABLE 1

Final Weightings Used In Study

	Aspect	Weighting
1	Smoke	4.48
2	Particulates	2.14
3	Odour	4.48
4	NO_x	3.92
5	HC	3.99
6	CO	3.61
7	SO_2	3.48
8	HC reactivity	1.83
9	Evaporative Emissions	1.60
10	Miscellaneous Emissions	0.98
11	Noise (Drive-by)	6.32
12	Package volume	2.61
13	Package weight	2.59
14	Fuel economy	12.20
15	Fuel cost	5.40
16	Vehicle first cost	4.65
17	Maintenance cost	4.35
18	Startability	4.85
19	Hot driveability	4.48
20	Cold driveability	3.52
21	Torque rise	1.98
22	Durability	4.80
23	Heat loss	2.18
24	Fire risk	3.55
25	Idling noise	3.83
26	Vibration and torque recoil	2.18

How Well a Performance Aspect or Requirement is Met

It is necessary that a rating scale be devised so that a quantitative assessment of how well a particular power plant meets a given performance aspect can be made. The above list of performance aspects shows that although some aspects could be quickly assessed in a numerical fashion, many others are essentially qualitative and any rating scale should be able to cover all aspects.

As expected, some difficulty was experienced in relating a purely subjective impression to a linear quantitative scale, but after some consideration the following system was adopted as giving the numerical scale several easily relatable, subjective key points, the numbers without definition being an interpolation of the surrounding merit definitions.

Merit rating scale

0 Totally unacceptable
1
2 Bad
3
4 Poor
5 Acceptable
6
7 Good
8
9 Best practical
10 Perfect

Assessment of Overall Merit of the Power Plant

The rating system evolved allows an immediate quantitative assessment of the overall merit of the power plant and this is accomplished by multiplying each aspect 'rating' by its appropriate 'weighting' and summing all the products. With a total weighting of 100 and a merit scale of 0-10 as above the maximum possible is 1000.

The relative merit of various power plants can be assessed immediately by comparing their total scores, the power plant with the highest score being the best. An idea of the absolute merit of the power plants can also be obtained if the score is divided by 100 and the quotient related to the above rating scale, e.g. a score of 1000/100 = 10 is a 'perfect' power plant. A score of 500/100 = 5 is an 'acceptable' power plant.

Use of the Rating System in the Study

In order to apply the rating system to the power plants considered in this study a committee was used to assess the various ratings. The committee consisted of five experienced members of the Ricardo staff and great care was taken to ensure that the committee had no bias to either diesel or gasoline power plants. The power plants considered were those described in the 'engine configuration' section of the report with the addition of the two gasoline engines described briefly in the same section.

i.e.
1) V-8 'American' gasoline
2) I.L.-6 'European' gasoline
3) V-8 I.D.I. diesel
4) 6 cyl. I.D.I. diesel turbocharged
5) 6 cyl. I.D.I. diesel with Comprex
6) 6 cyl. D.I. diesel turbocharged
7) 6 cyl. D.I. diesel with Comprex
8) 6 cyl. 2-stroke loop scavenged I.D.I. diesel
9) 6 cyl. 2-stroke uniflow D.I. diesel
10) 4 cyl. 4-stroke compound D.I. diesel
11) 2-stage 2 bank rotary diesel

Each of the above power plants was to be considered for the primary and secondary emission levels of the study.

i.e. Primary Targets

HC	0.41	g/mile
CO	3.4	g/mile
NO_x	1.5	g/mile

Secondary Targets

HC	0.41	g/mile
CO	3.4	g/mile
NO_x	0.4	g/mile

The above emission levels being measured according to the CVS-CH test procedure.

In fact as it was considered that none of the diesel power plants could possibly meet the secondary targets (in particular the 0.4 g/mile NO_x figure) the rating system was only applied to an environment embracing the primary targets.

RESULTS OF RATING ASSESSMENT

The following 26 sub-sections give the 'ratings' given to each of the eleven power plants on each performance aspect.

Each sub-section is preceeded by a summary table giving the numerical ratings and the sub-section proper then follows giving notes on the derivation of the various scores. Since a verbatim account of the committee deliberations which led to each score would be tedious to the reader the first aspect 'smoke' is described in some detail to illustrate the process while following aspects are covered briefly unless major contentious points arose.

The final ratings are also shown in Table 2 at the end of the 26 sub-sections.

1. SMOKE

Engine	Score
V-8 gasoline	9
IL6 gasoline	8
NA V-8 I.D.I.	6
TC 6 I.D.I.	4.5
Comprex 6 I.D.I.	5
TC 6 D.I.	4.5
Comprex 6 D.I.	5
Loop scav. I.D.I.	4
Uniflow D.I.	5
Compound D.I.	3
2 stage rotary	2

For commercial vehicles the absolute smoke level at which the engine is limited varies considerably from country to country and even between manufacturers, some simply complying with legislative requirements whereas other companies aim for significantly lower levels. For passenger car use, maximum smoke levels must be selected on an aesthetic basis in order to avoid public criticism. From European experience, Ricardo would recommend that

maximum steady state smoke levels of 5-8% opacity should be aimed for. The combination of these low smoke levels, with the high power/weight ratio of the vehicle should result in the exhaust being at least acceptable from most of the candidate diesel power plants.

V-8 gasoline engine

Although the use of full load mixture enrichment devices can caused visible black smoke with hard accelerations, the gasoline engine per se is completely free of visible smoke problems and can be classed in the category of "best practical". Blue smoke can be formed in a worn gasoline engine but this is also true of any other conventional internal combustion engine.

Score - 9

6 cylinder gasoline engine

Again the smaller more highly rated gasoline engine will only suffer a smoke problem under acceleration conditions but its smaller size infers that mixture enrichment will occur over a larger part of its load range and therefore for a longer proportion of a given acceleration. Although marginally inferior to its larger brother the small 180 CID gasoline engine must still be regarded as extremely good when considering visible smoke emissions.

Score - 8

NA V-8 I.D.I.

Black smoke is the major criterion which controls the output of any naturally aspirated diesel engine. The smoke level selected for the performance estimates will result in a very small amount of smoke being visible from the kerbside, although at levels and for time periods which are better than just acceptable to the general public. As engine load is reduced, black smoke disappears rapidly from I.D.I. engines so that this power plant would be better than acceptable from the point of view of black smoke.

White/blue smoke due to incomplete combustion of fuel should not be a problem from any of the indirect injection chamber engines.

Score - 6

TC 6 cyl. I.D.I.

The smoke characteristics from this lightly boosted engine will be very similar to those of the naturally aspirated V-8 although it will probably suffer a transient smoke problem. This occurs when the turbocharger inertia prevents the turbocharger output from keeping pace with the engine's demands, the resultant over-rich fuel/air ratio leading to black smoke. For an engine of this rating such a problem would normally be confined to accelerations from very low speeds where turbine and compressor efficiencies are low.

The magnitude of this problem in terms of smoke would be slight but would probably be termed as annoying to the casual observer. Experience has shown it to be almost insuperable if vehicle driveability is to remain unaltered. Another annoying aspect of this problem is that it brings the diesel's smoke right to the city centre and suburbs (the slight smoke problem of the naturally aspirated diesel occurs at a higher speed/load and will not normally be apparent during in-city driving).

Score - 4.5

Comprex boosted 6 cyl. I.D.I.

The reputedly instantaneous flow response of the Comprex pressure exchanger to load and speed should improve the smoke emissions from a diesel engine considerably. However, much time has been put into development of this device without a production solution being achieved and the full range performance and durability of Comprex has yet to be proven. At its present state of development there is some confidence that this power plant will be better than its turbocharged equivalent.

Score - 5

TC D.I.

Black smoke levels from the turbocharged D.I. should be similar to those from the turbocharged I.D.I. assuming a practical method of achieving the required NO_x levels is developed (current technology indicates that the D.I. engine will have great difficulty in achieving 1.5 NO_x during CVS-CH) without resorting to excessive amounts of timing retard. Even with small amounts of retard a blue smoke problem may exist.

Score - 4.5

Comprex boosted D.I.

Again the theoretical advantage of instant transient response of the pressure exchanger make this candidate more attractive than the turbocharged D.I. and this power plant should be as good as the I.D.I. version.

Score - 5

Loop scavenge 2 stroke I.D.I.

Black smoke response from the 2 stroke I.D.I. should not be any worse than from a four stroke I.D.I. but blue smoke may be a problem if large quantities of lubricating oil are burnt - due to the proximity of the inlet and exhaust ports and their position within the cylinder there is every likelihood of this occurring. It is this latter aspect which renders it likely that this engine will be less than acceptable.

Score - 4

Uniflow 2 stroke D.I.

The blue smoke problem associated with the loop scavenge two stroke should not occur on this engine and providing adequate scavenge can be provided black smoke should not be a problem even with some timing retard (note it is extremely unlikely that this engine with a D.I. chamber could achieve the primary NOx target and some device - e.g. exhaust gas recirculation, would be required in addition to timing retard). It was considered that this engine would be capable of achieving an acceptable smoke rating.

Score - 5

Compound D.I.

With its small radial compressor driven direct from the crankshaft, parasitic losses at low engine speeds in addition to low boost pressures would force the manufacturer to aim for maximum air utilisation at low speeds giving high smoke levels. The extremely high boost ratio would require the adoption of low compression ratios which would introduce light load misfire problems and white/blue smoke during and immediately after a cold start would almost certainly be found. This engine would be somewhat worse than poor from the point of view of smoke.

Score - 3

2 stage rotary engine

The successful development of an automotive rotary diesel engine would need years of research into optimum combustion systems and even then it is unlikely that competitive air utilisation levels could be achieved. The clearance volume between the rotor and trochoid is far removed from the optimum as it contains large areas which are too shallow and inaccessible to support or allow the propagation of combustion. This could lead to smoke problems at both ends of the load range, blue smoke at light load and black smoke at high load with the distinct possibility of a "plateau" smoke problem bridging the two. There is little doubt that this engine will be the worst of all those assessed from this aspect and should be rated as 'bad'.

Score - 2

2. PARTICULATES

Engine	Score
V-8 gasoline	7
IL6 gasoline	7
NA V-8 I.D.I.	2
TC 6 I.D.I.	2
Comprex 6 I.D.I.	2
TC 6 D.I.	2
Comprex 6 D.I.	2
Loop scav. I.D.I.	2
Uniflow D.I.	2
Compound D.I.	2
2 stage rotary	2

Currently the data is insufficient to come to a final decision concerning this topic especially as the true reactivity of particulates has yet to be determined. It was argued that if the gasoline engine running on lead free fuel were regarded as good, or worthy of seven merit points, the Diesel engine with particulate levels of 10-20 times that of the gasoline must warrant a rating of bad or two points. Ricardo do not feel qualified to predict relative particulate levels between the different Diesel variants and therefore award the same score to all. If particulate levels are to be limited by legislation, the Diesel would need hang-on soot or particulate filters and it is in this area that further work could be usefully carried out. The true health hazards of various sizes of particles should also be determined before legislation is passed.

3. ODOUR

Engine	Score
V-8 gasoline	7
IL6 gasoline	7
NA V-8 I.D.I.	4
TC 6 I.D.I.	4
Comprex 6 I.D.I.	4
TC 6 D.I.	3
Comprex 6 D.I.	3
Loop scav. I.D.I.	3
Uniflow D.I.	3
Compound D.I.	3
2 stage rotary	2

It was generally agreed that the gasoline power plants are good from the point of view of odour even though the exhaust fumes are noticeable under cold conditions. All the diesel plants, however, are noticeably odorous and although the modern automotive I.D.I. engines are good as diesel engines go they are poor by comparison with the gasoline engines. Light load odour is perhaps the most objectionable while the full load odour at low air/fuel ratios is also noticeable.

The direct injection four-stroke engines will be worse at both light load and full load than the indirect injection engines due to the more limited capabilities of their combustion system.

The two-stroke engines will have similar characteristics to the direct injection four-strokes.

The compound engine may have a problem with odour at low loads but is unlikely to be much worse overall than the direct injection engines.

The rotary engine will be very odorous due to poor scavenging of end spaces and the difficulty of arranging for complete combustion over a wide load and speed range.

4. NO_x

Engine	Score
V-8 gasoline	5
IL6 gasoline	5
NA V-8 I.D.I.	5
TC 6 I.D.I.	5
Comprex 6 I.D.I.	5
TC 6 D.I.	(0)
Comprex 6 D.I.	(0)
Loop scav. I.D.I.	5
Uniflow D.I.	(0)
Compound D.I.	(0)
2 stage rotary	5

On performance aspects involving legislative requirements, the manufacturer will be forced by mainly economic considerations to produce a powerplant which just satisfies the mandate (unless the engine already betters these requirements in optimum performance build). Thus for all candidate power plants where some reduction in pollutants is necessary to achieve the project targets, a classification of acceptable was awarded even though the potential of the engine might have been substantially better than regulatory requirements (since further reduction would involve other penalties).

Gasoline engines have already demonstrated their ability to achieve 1.5 g/mile NO_x during CVS-CH and it is predicted that a 130 bhp I.D.I. diesel should be capable of attaining this level although with a significant degree of timing retard. Heavy duty experience indicates that the D.I. engine will not be capable of attaining this level and all variants with this chamber have been awarded a zero score. When considering the secondary NO_x target of 0.4 g/mile, it is known that several gasoline engines have achieved this level at zero miles but catalyst durability is currently low. Daimler-Benz have demonstrated a 65 bhp Diesel powered vehicle with NO_x levels of 0.4 g/mile but with the heavier vehicle and higher power/weight ratio of the vehicle for the study it was felt that this target is not achievable with current technology and production methods.

5. HC

Engine	Score
V-8 gasoline	5
IL6 gasoline	5
NA V-8 I.D.I.	5
TC 6 I.D.I.	5
Comprex 6 I.D.I.	5
TC 6 D.I.	(0)
Comprex 6 D.I.	(0)
Loop scav. I.D.I.	(0)
Uniflow D.I.	(0)
Compound D.I.	(0)
2 stage rotary	(0)

As demonstrated earlier, it is estimated that with minor development, the I.D.I. engine should be capable of complying with the 0.41 g/mile requirement over CVS-CH. The D.I. in retarded mode (in order to minimise NO_x but still not achieving the target of 1.5 g/mile) is likely to suffer extremely high HC's and in Ricardo's opinion, none of the D.I. candidates would be capable of complying with the HC requirement of this project. The poor combustion chamber shape of the 2 stage rotary engine is hardly conducive to efficient combustion and unburnt HC's are likely to be very high. Unfortunately the rapid drop in exhaust temperature as load is reduced on the diesel engine is likely to restrict catalyst activity to the higher loads only and their effectiveness during CVS-CH on a high powered diesel vehicle is open to doubt. Investigations into low temperature light-up catalyst and catalyst matrix design (for carbon storage and to ensure sufficiently free access of the HC's to the catalyst) could be an area worth further investigation.

6. CO

Engine	Score
V-8 gasoline	5
IL6 gasoline	5
NA V-8 I.D.I.	6
TC 6 I.D.I.	5
Comprex 6 I.D.I.	5
TC 6 D.I.	5
Comprex 6 D.I.	5
Loop scav. I.D.I.	5
Uniflow D.I.	5
Compound D.I.	5
2 stage rotary	(0)

There should be no problem in achieving the CO targets for any of these engines apart from the two stage rotary engine where it is felt that the inefficient combustion will again result in higher emissions.

The naturally aspirated V-8 I.D.I. should achieve the targets without any modifications and therefore merits 6 points whereas the remaining candidates score 5.

7. SO_2

Engine	Score
V-8 gasoline	7
IL6 gasoline	7
NA V-8 I.D.I.	4
TC 6 I.D.I.	4
Comprex 6 I.D.I.	4
TC 6 D.I.	4
Comprex 6 D.I.	4
Loop scav. I.D.I.	4
Uniflow D.I.	4
Compound D.I.	4
2 stage rotary	3

This pollutant is totally dependent on the sulphur content of the fuel and the amount of fuel being burnt. In assessing or rating the Diesel for SO_2 it was assumed that the sulphur content of US light distillate (DF1) is similar to that found in Europe (i.e. 0.2-0.5%). In theory the sulphur can be completely extracted from the fuel but economic considerations have ruled this out to date. The reactions of SO_2 in the exhaust to form sulphates/sulphides should not be overlooked; the addition of oxidation catalysts would probably increase the extent of these. The sulphur content of gasoline is very low (<0.1%) and thus the gasoline engines were rated as good. Diesel engines must rate a merit number of only 4 apart from the 2 stage rotary engine, where the extremely high fuel consumption will drop the rating by one further number.

8. HC REACTIVITY

Engine	Score
V-8 gasoline	5
IL6 gasoline	5
NA V-8 I.D.I.	7
TC 6 I.D.I.	7
Comprex 6 I.D.I.	7
TC 6 D.I.	7
Comprex 6 D.I.	7
Loop scav. I.D.I.	7
Uniflow D.I.	7
Compound D.I.	7
2 stage rotary	7

This subject is an important aspect of HC emissions and as mentioned earlier, HC's emitted by the Diesel under high load conditions may be conveniently wrapped in the soot skeleton to form a coagulum which effectively bars their escape to the atmosphere or animal tissues. At light load conditions, blue smoke can be found and here the HC's are freely available. However it has been demonstrated that HC reactivity from the gasoline engine is 10 times higher than from the Diesel. Thus if all gasoline variants warrant an acceptable rating then the diesels should be at least two points better.

9. EVAPORATIVE EMISSIONS

Engine	Score
V-8 gasoline	5
IL6 gasoline	5
NA V-8 I.D.I.	7
TC 6 I.D.I.	7
Comprex 6 I.D.I.	7
TC 6 D.I.	7
Comprex 6 D.I.	7
Loop scav. I.D.I.	7
Uniflow D.I.	7
Compound D.I.	7
2 stage rotary	7

With modern control systems using carbon filter/storage canisters, gasoline is an acceptable and practical fuel. Using the same systems, mid-distillates such as used in high speed Diesel engines would suffer marginal evaporative losses and must merit a good rating. This assumes fuels similar to current No. 1, wider cut fuels may use more of the light end fraction which could close the gap between diesel fuel and gasoline. One disadvantage of having a fuel of low volatility is that if a fuel leak occurs the fuel does not evaporate and its odour can be detected for some considerable time.

10. MISCELLANEOUS EMISSIONS

Engine	Score
V-8 gasoline	5
IL6 gasoline	5
NA V-8 I.D.I.	5
TC 6 I.D.I.	5
Comprex 6 I.D.I.	5
TC 6 D.I.	5
Comprex 6 D.I.	5
Loop scav. I.D.I.	5
Uniflow D.I.	5
Compound D.I.	5
2 stage rotary	5

At the time of the study none of the power plants was regarded as producing major quantities of any pollutants other than those already considered so that all were rated as equal and acceptable.

11. DRIVE-BY NOISE

Engine	Score
V-8 gasoline	7
IL6 gasoline	6½
NA V-8 I.D.I.	6
TC 6 I.D.I.	6
Comprex 6 I.D.I.	5
TC 6 D.I.	4
Comprex 6 D.I.	3
Loop scav. I.D.I.	6
Uniflow D.I.	6
Compound D.I.	6
2 stage rotary	6

As mentioned earlier, the Diesel powered vehicle is only slightly noisier than its gasoline counterpart when driven at speed. (Based on experience with naturally aspirated indirect injection engines). The V-8 gasoline powered vehicle, being very quiet under drive-by conditions (75-80 dB(A) at 15m (50 ft)) must be given a drive-by rating of good whereas the 6 cylinder European engine working with lower drive ratios will be marginally noisier. Within the Diesel range, the indirect chamber engines will be inherently quieter than their D.I. equivalents. With all engines operating in a retarded timing mode, absolute noise levels of the I.D.I. engines will be only marginally higher than the gasoline power plants. Predicted noise levels of the candidate power plants are listed below. These predictions are for the bare test bed engine at a distance of 1 m (3.2 ft). To correlate these with American drive-by noise test conditions one must subtract approximately 20-22 dB(A).

Bare engine test bed noise levels (1 m)

Gasoline V-8 (97 mm bore, 66.7 rev/s, 93 dB(A))
Gasoline 6 (88 mm bore, 82.5 rev/s, 96 dB(A))

NA V-8 I.D.I.	97
TC 6 I.D.I.	96
Comprex 6 I.D.I.	96
TC 6 D.I.	102
Comprex 6 D.I.	102
Loop scav. I.D.I.	93
Uniflow D.I.	96
Compound D.I.	100
2 stage rotary	93

The formulae used in predicting the noise levels are empirical only and assume current technology is used in the crankcase design - significant reductions could be obtained by substantial modifications to the basic engine design. These formulae also only predict combustion noise which is normally dominant in these engines and take no account of other possible sources which could raise the overall noise levels. When considering the boosted DI and IDI four stroke engines allowance has to be made for the high sensitivity of the Comprex to exhaust back pressure and general design restrictions throughout the flow system (because of this the silencing of both intake and exhaust could not be made as effective as the silencing of the turbocharged engines and some additional noise penalty will be incurred). Of the last four candidates, so little information is known of their noise characteristics, particularly in this power range, that the degree of confidence in the predicted noise levels must be low.

12. PACKAGE VOLUME

Scores

Engine	Score
V-8 gasoline	7
IL6 gasoline	8
NA V-8 IDI	6
TC 6 IDI	5
Comprex 6 IDI	4
TC 6 DI	5
Comprex 6 DI	4
Loop Scav. IDI	4
Uniflow DI	3
Compound DI	5
2 stage rotary	8

Box volumes as calculated during the design configuration phase are listed as follows:-

	Box Vol. ft^3	(m^3)
V-8 IDI	11.2	(.32)
IL 6 IDI TC	12.7	(.36)
V-6 IDI TC	11.6	(.33)
IL 6 IDI Comprex	12.1	(.34)
V-6 IDI Comprex	-	-
IL 6 DI TC	12.0	(.34)

V-6 DI TC	11.0	(.31)
IL 6 DI Comprex	12.2	(.34)
V-6 DI Comprex	-	-
V-6 2 str. Loop Scav.	12.7	(.36)
IL 6 2 str. Uniflow	16.8	(.48)
4 cyl. Compound	11.3	(.32)
2 stage rotary	9.2	(.26)

All are given merit ratings roughly in accordance with their calculated box volume apart from the Comprex boosted engine where the disadvantage of taking the exhaust from near the front of the engine is not illustrated.

Since package shape is of at least equal importance to package volume, this was taken into account in applying ratings. Engine length, for example, was believed to be important in view of safety regulations.

13. PACKAGE WEIGHT

Scores

Engine	Score
V-8 gasoline	6
IL 6 gasoline	7
NA V-8 IDI	5
TC 6 IDI	5
Comprex 6 IDI	5
TC 6 DI	5
Comprex 6 DI	5
Loop Scav. IDI	4
Uniflow DI	4
Compound DI	5
2 stage rotary	7

The weight penalty of the small high speed diesel engine is large when compared with a European type gasoline engine but this penalty is reduced considerably if a larger American type V-8 is used as basis for comparison. It is Ricardo's opinion that only the European gasoline engine can warrant a rating of good (7 points); all other power plants apart from the rotary diesel considered in this exercise are considerably heavier and must therefore warrant lower scores.

Engine	Est. weight lb	(kg)
V-8 gasoline	550	(250)
IL-6 gasoline	410	(186)
NA V-8 IDI	700	(320)
TC 6 IDI	720	(327)
Comprex 6 IDI	680	(309)
TC 6 DI	680	(310)
Comprex 6 DI	660	(300)
Loop Scav. IDI	760	(340)
Uniflow DI	800	(365)
Compound DI	670	(305)
2 stage rotary	500	(227)

14. FUEL ECONOMY

Scores

Engine	Score
V-8 gasoline	5
IL 6 gasoline	5½
NA V-8 IDI	7½
TC 6 IDI	7
Comprex 6 IDI	7
TC 6 DI	8
Comprex 6 DI	8
Loop Scav. IDI	6½
Uniflow DI	7
Compound DI	8
2 stage rotary	5

For this section it was felt that the rating system must be redefined on a quantitative basis and the following scale was devised.

Fuel economy mpg	(l/100 km)	Rating (normal subjective scale)
		0 (totally unacceptable)
6	(39.4)	1
		2 (bad)
10	(23.6)	3
		4 (poor)
15	(15.7)	5 (acceptable)
		6
20	(11.8)	7 (good)

(contd.)

Fuel economy mpg	(l/100 km)	Rating (normal subjective scale) (contd.)
		8
25	(9.45)	9 (best practical)
		10 (perfect)

Predicted fuel economy figures were based on estimated and measured fuel consumption levels from engines of each type. For the rotary engine, little data are available but from basic combustion considerations and for the higher friction levels of the rotary engine, specific fuel consumption curves have been prepared from which comparative vehicle fuel economy levels could be estimated.

Estimated vehicle fuel consumption and economy levels during CVS-CH are :-

	l/100 km	mpg
V-8 gasoline	18.2	13
IL6 gasoline	15.7	15
NA V-8 IDI	11.8 - 10.7	20-22
TC 6 IDI	12.4 - 11.2	19-21
Comprex 6 IDI	12.4 - 11.2	19-21
TC 6 DI	(11.2 - 10.3)	(21-23)
Comprex 6 DI	(11.2 - 10.3)	(21-23)
Loop Scav. IDI	(13.1 - 11.8)	(18-20)
Uniflow DI	(12.4 - 11.2)	(19-21)
Compound DI	(11.2 - 10.3)	(21-23)
2 stage rotary	(16.8 - 14.7)	(14-16)

Fuel economy levels in brackets indicate that although the injection timings of the engines have been retarded as far as is practical, it is estimated that at least one primary emissions target (normally NOx - see emissions section) has not been achieved. The poorer fuel economy of the boosted IDI as compared with the naturally aspirated V-8 is due to its need for further timing retard to comply with 1.5 g/mile NOx.

15. FUEL COST

Scores

Engine	Score
V-8 gasoline	5
IL 6 gasoline	5
NA V-8 IDI	5
TC 6 IDI	5

Comprex 6 IDI	5
TC 6 DI	5
Comprex 6 DI	5
Loop Scav. IDI	5
Uniflow DI	5
Compound DI	5
2 stage rotary	5

The fuel requirements of all the diesel candidates are similar to current light distillate (DF1). Due to a lack of real data on the economics of fuel refineries and because the switch towards greater use of diesel fuels does not require technological innovation, it is assumed that the fuel situation for both gasoline and diesel candidates must be regarded as acceptable and a score of 5 has thus been awarded.

It is estimated that the adoption of lead free gasoline would incur a price penalty of 10% however, and if sulphur free diesel fuel were stipulated, a severe cost penalty might arise, but due to the uncertain future situation with regard to fuel prices no attempt has been made to compare diesel and gasoline engine fuels.

16. VEHICLE FIRST COST

Scores

Engine	Score
V-8 gasoline	6
IL 6 gasoline	7
NA V-8 IDI	5
TC 6 IDI	5
Comprex 6 IDI	5
TC 6 DI	5
Comprex 6 DI	5
Loop Scav. IDI	4.5
Uniflow DI	4.5
Compound DI	4
2 stage rotary	4

If the existing gasoline powered American car is regarded as slightly better than acceptable in terms of first cost then the European type engine should give sufficient advantage to warrant an extra point. The first cost of all diesel engines is undoubtedly a penalty and all the evidence available indicates that a cost penalty of some 10% will be incurred with a diesel powered vehicle even

after allowing for the cost of catalysts for the gasoline engine. Because of this the 'conventional' diesel powered vehicles would only be just acceptable in terms of first cost. (The potential cost savings with the smaller boosted engines are offset by the cost of the supercharging equipment). The higher development time and cost for the two stroke engines will impose a surcharge on the vehicle first cost so that these power plants must be rather less than acceptable. The very high development, manufacturing and material costs of both the compound and rotary engines will pull them down to a 'poor' category for this aspect.

17. MAINTENANCE

Scores

Engine	Score
V-8 gasoline	5
IL 6 gasoline	6
NA V-8 IDI	6
TC 6 IDI	6
Comprex 6 IDI	6
TC 6 DI	5
Comprex 6 DI	5
Loop Scav. IDI	5
Uniflow DI	6
Compound DI	4
2 stage rotary	2

Data extracted from the literature survey and the experience of taxi operators in Europe all suggest that minor maintenance costs for diesel vehicles are similar to those of gasoline equivalents but that major engine services for the diesel are not required within the normal operating life of the vehicle. The average operating load factor for American passenger car engines is somewhat lower than European vehicles (solely because of their higher power:weight ratio) and the maintenance periods quoted for European use should be increased when considering the American situation.

Maintenance costs for gasoline engines are regarded as satisfactory, and European experience indicates that the four stroke IDI engines should be better than this. The direct injection engine uses plain hole nozzles which require cleaning at more frequent intervals than the variable orifice pintle nozzle used in the indirect injection combustion systems. Otherwise maintenance requirements are the same as for the IDI engine.

Of the two stroke engines, the direct injection uniflow engine has been given a

higher reliability rating mainly because of the excellent reputation of GM's two stroke engines, to which this engine is closely akin.

The compound engine which is the candidate with the highest thermal loading - 0.00353 kW/mm^2 (3.04 hp/in^2), and mechanical stresses - 137 bar (2000 lb/in^2) cylinder pressure - is likely to be a much more sophisticated design particularly around the combustion chamber area,and major cylinder head maintenance periods are likely to be far shorter than for the other variants.

It is felt that the 2 stage rotary engine would also need frequent servicing even if only because the high cylinder pressures would cause high rates of seal wear and the use of only one injector per bank with very high injection frequencies could increase servicing demands in this area.

18. STARTABILITY

Scores

Engine	Score
V-8 gasoline	6
IL 6 gasoline	6.5
NA V-8 IDI	5
TC 6 IDI	5
Comprex 6 IDI	5
TC 6 DI	5
Comprex 6 DI	5
Loop Scav. IDI	4
Uniflow DI	5
Compound DI	2
2 stage rotary	2

With the ability to start instantaneously under most environmental conditions experienced in America, the gasoline engine should merit a very high rating but the hot starting of low emissions vehicles is known to be poor and is not likely to improve substantially beyond today's levels. Thus the V-8 engine was awarded 6 points but the 6-cylinder engine with its fuel injection system should start more easily and was thus awarded 6.5.

The starting characteristics of the naturally aspirated diesel could only be classified as acceptable even with a programmed start system. The development of an instantaneous warm up heater plug which gives a clean start in all conditions would improve the start up of the diesel to a significant extent.

With the low boost pressure ratios used on the 6 cylinder IDI engines it should be possible to use the same compression ratio as in a naturally aspirated engine without encountering excessively high cylinder pressures at full load conditions. Starting characteristics should therefore be unaltered.

Although large DI engines have extremely good starting characteristics, tests run by Ricardo on a high speed DI with a cylinder capacity of 0.5 l (30 in^3) have indicated startability to be on a par with the IDI. This is due to higher heat losses to the cylinder walls (a) because of the higher swirl rates needed for high speed operation,and (b) because of the higher surface area:volume ratio of the smaller cylinder. The compression ratio of the DI was similar to that of the swirl chamber engine.

It is likely that the loop scavenge IDI will have a low effective compression ratio at cranking speeds with resultant inferior starting. It is difficult to quantify this but a rating of 4 has been awarded if only to point out a likely problem area. The uniflow two stroke should start as well as the four stroke engines.

In order for the compound engine to attain its extremely high outputs without exceeding its designed maximum cylinder pressures, its compression ratio will need to be limited to 13:1 and severe starting/misfire/blue-white smoke problems are foreseen. Methods might be developed for reducing the misfire and light load smoke problems after starting but with current technology it is extremely unlikely that a clean, reliable start could be achieved in ambient American winter conditions. A score of 2 points has therefore been awarded.

With the rotary engine, cranking heat losses between stages will be extremely high as will be blowby losses at low speeds and it is difficult to envisage its starting characteristics to be anything better than bad.

19. HOT DRIVEABILITY

Scores

Engine	Score
V-8 gasoline	7
IL 6 gasoline	7
NA V-8 IDI	7
TC 6 IDI	6
Comprex 6 IDI	7
TC 6 DI	6
Comprex 6 DI	7

Loop Scav. IDI	7
Uniflow DI	7
Compound DI	7
2 stage rotary	7

Hot driveability of all candidates apart from the two turbocharged four stroke engines will in no way be inferior to current generation passenger car engines (this assumes that all-speed governing used on most European diesel cars is discarded in favour of simple idling and overspeed governing), and a score of 7 points has been awarded to all but these types. The turbocharged engines will suffer a slight lag during acceleration because of tubocharger inertia and the resultant feeling that the driver has not complete control over the vehicle can be disturbing. It is claimed that the Comprex does not suffer this delay problem.

20. COLD DRIVEABILITY

Scores

Engine	Score
V-8 gasoline	5
IL 6 gasoline	6
NA V-8 IDI	8
TC 6 IDI	8
Comprex 6 IDI	8
TC 6 DI	8
Comprex 6 DI	8
Loop Scav. IDI	8
Uniflow DI	8
Compound DI	8
2 stage rotary	8

With flat spots due to carburation problems at cold temperatures the V-8 gasoline engine can barely be regarded as acceptable. The 6 cylinder gasoline engine, however, will be better than this due to the use of fuel injection. The diesel engine pulls away immediately without hesitation once a start has been achieved, the only difference between hot and cold driveability being due to the higher friction levels of the cold engine. Eight points were awarded therefore to all the diesel candidates.

21. TORQUE RISE

Scores

Engine	Score
V-8 gasoline	7
IL 6 gasoline	7
NA V-8 IDI	7
TC 6 IDI	7
Comprex 6 IDI	7
TC 6 DI	7
Comprex 6 DI	7
Loop Scav. IDI	7
Uniflow DI	7
Compound DI	2
2 stage rotary	7

All candidates achieve the torque characteristics demanded by the performance specifications, assuming a three speed automatic gearbox, with the one exception of the compound four stroke engine. The extremely poor torque curve of this engine would need a very sophisticated transmission system to achieve any degree of acceptance with the general public and only two points were awarded to this engine.

22. DURABILITY

Scores

Engine	Score
V-8 gasoline	6
IL 6 gasoline	5.5
NA V-8 IDI	7
TC 6 IDI	6
Comprex 6 IDI	6
TC 6 DI	6
Comprex 6 DI	6
Loop Scav. IDI	7
Uniflow DI	8
Compound DI	5
2 stage rotary	2

Durability of 1.5 g/mile NOx American gasoline engines is assumed to be satis-

factory on the assumption that catalyst life can be increased. The European type engine with its higher rating and operational speed range is likely to suffer slightly higher wear rates but a satisfactory life of 100,000 miles can easily be achieved.

The life of the diesel powered passenger car engine in Europe is significantly greater than that of the gasoline engine. The same arguments should apply in American use although absolute life in terms of mileage will be greater in America because of higher power: weight ratios (and therefore lower relative load factors). It is therefore Ricard's opinion that the durability of the naturally aspirated IDI should be classified as good (7 points). The boosted engines, both DI and IDI, will have marginally lower useful lives because of higher mechanical and thermal loadings in and around the combustion chamber. However, their longevity will still be comparable to the American V-8 gasoline engine.

Due to their simplicity the life of the two stroke engines should be equivalent to or better than the four stroke engines. The excellent reputation of GM 's uniflow engines cannot be overlooked and for this reason the uniflow DI has been rated at 8 points.

With considerable development the compound engine could achieve 160,000 km (100,000 miles) in passenger car service (acceptable - 5 points) but the durability of the rotary engine is open to speculation and in Ricardo's opinion it could not be developed to a satisfactory degree using current technology.

23. COOLANT HEAT LOSSES

Scores

Engine	Score
V-8 gasoline	5
IL 6 gasoline	5
NA V-8 IDI	5
TC 6 IDI	5
Comprex 6 IDI	5
TC 6 DI	5
Comprex 6 DI	5
Loop Scav. IDI	5
Uniflow DI	5
Compound DI	5
2 stage rotary	4

Although the heat loss to coolant of the IDI diesel is some 25% higher than that of the gasoline engine, cooling under full load conditions is not the critical case in passenger applications and although some increase in radiator size may be necessary for diesel cars, it certainly would not be a major increase and it may be possible to use the same radiator (Peugeot use the same radiator in the gasoline and diesel cars but the diesel engine is of much lower output). It is therefore assumed that no significant front end changes are needed for the application of a diesel engine to passenger cars and the same acceptable rating was awarded to all candidates except the rotary diesel where the extremely poor fuel utilisation will significantly increase heat losses - 4 points were awarded in this case.

24. FIRE RISK

Scores

Engine	Score
V-8 gasoline	5
IL 6 gasoline	5
NA V-8 IDI	6
TC 6 IDI	6
Comprex 6 IDI	6
TC 6 DI	6
Comprex 6 DI	6
Loop Scav. IDI	6
Uniflow DI	6
Compound DI	6
2 stage rotary	6

Apart from the fact that 0.2% of accidents involve fire, no quantitative data relating to fire risk was uncovered during the literature survey.

Causes of fires in automotive accidents are inevitably very complex but the major source of ignition is a high energy electrical discharge or a fire in the wiring loom due to a dead short. Thus the flash point of the fuel has very little influence on fire risk but its volatility does in that a highly volatile fuel such as gasoline can create a large area of mixture with sufficient strength to support combustion, in this manner it can 'transport' itself effectively to the ignition source. Under normal climatic conditions the volatility of diesel fuel is too low to allow the formation of a combustible mixture.

The lack of H.T. ignition systems in diesel vehicles must also lower their fire

risk (whether an accident occurs or not).

For these reasons the diesel vehicle has been given one point more on the merit rating scale than the gasoline vehicle. It is assumed the fire risk of the gasoline vehicle must be regarded as acceptable (i.e. 5 points).

25. IDLE NOISE

Scores

Engine	Score
V-8 gasoline	8
IL 6 gasoline	8
NA V-8 IDI	5
TC 6 IDI	5
Comprex 6 IDI	5
TC 6 DI	3
Comprex 6 DI	3
Loop Scav. IDI	5
Uniflow DI	4
Compound DI	2
2 stage rotary	5

The idling noise of the gasoline engine is low in terms of both objectionability and overall noise level and must be approaching the best practical level that a power plant can achieve. Although idling noise levels of the IDI diesel engines are low, the characteristics of the noise are subjectively annoying and have an immediate impact on the casual observer in the street. The overall noise level from the IDI is sufficiently low to make this just acceptable. With its greater instantaneous pressure rise the DI engine sounds harsher than the IDI and noise levels are normally somewhat higher; Ricardo feel it would be regarded as approaching bad or even unacceptable by the general public. The two stroke engines were given the same score as the four stroke engines with the same chamber apart from the uniflow engine which was given the benefit of one extra point, again mainly because of the reputation of GM's engines.

The compound engine with its very low compression ratio will have very long delay periods at idling conditions with attendant harsh, loud combustion noises. Mechanical gear noise in the complex drive may also be a problem because of torque recoil.

In the case of the two stage rotary engine it is difficult to predict idle noise but

the shape should limit noise transmission and it was therefore awarded 5 points, i.e. the same as the reciprocating IDI engines.

26. VIBRATION AND TORQUE RECOIL

Scores

Engine	Score
V-8 gasoline	8
IL 6 gasoline	8
NA V-8 IDI	6
TC 6 IDI	5
Comprex 6 IDI	5
TC 6 DI	5
Comprex 6 DI	5
Loop Scav. IDI	5
Uniflow DI	5
Compound DI	4
2 stage rotary	7

The aspect of vibration and torque recoil is undoubtedly a major contributor to the feel or refinement of a vehicle.

Both the gasoline power plants are so smooth that the user is totally unaware of any reciprocating motion and they must be regarded as the best practical expression of power plants.

The unthrottled diesel engines with higher compression ratios are all inherently rougher than the gasoline engine, and the V-8 would be only good while the 6 cylinder engines would all tend to drop down to an 'acceptable' rating due to the lower number of cylinders.

The compound engine is essentially a 4 cylinder engine from this aspect and must be considered poor.

Of all the diesel power plants it was felt that the rotary engine would score best on this aspect and although not quite as unobtrusive as the gasoline engines, it would certainly be good due to its inherent good balance.

TABLE 2

Final Ratings for Each Aspect

	Aspect	V-8 gasoline	6 cyl. gasoline	V-8 IDI	6 cyl. IDI T/C	6 cyl. IDI Comprex	6 cyl. DI T/C	6 cyl. DI Comprex	2 str. loop scavenge	2 str. uniflow	Compound	2 stage rotary
1	Smoke	9	8	6	4.5	5	4.5	5	4	5	3	2
2	Particulates	7	7	2	2	2	2	2	2	2	2	2
3	Odour	7	7	4	4	4	3	3	3	3	3	2
4	NOx	5	5	5	5	5	(0)	(0)	5	(0)	(0)	5
5	HC	5	5	5	5	5	(0)	(0)	(0)	(0)	(0)	(0)
6	CO	5	5	6	5	5	5	5	5	5	5	(0)
7	SO_2	7	7	4	4	4	4	4	4	4	4	4
8	HC reactivity	5	5	7	7	7	7	7	7	7	7	7
9	Evap. emissions	5	5	7	7	7	7	7	7	7	7	7
10	Misc. emissions	5	5	5	5	5	5	5	5	5	5	5
11	Noise (drive-by)	7	6.5	6	6	5	4	3	6	6	6	6
12	Package volume	7	8	6	5	4	5	4	4	3	5	8
13	Package Weight	6	7	5	5	5	5	5	4	4	5	7
14	Fuel economy	5	5.5	7.5	7	7	8	8	6.5	7	8	5
15	Fuel cost	5	5	5	5	5	5	5	5	5	5	5
16	Vehicle first cost	6	7	5	5	5	5	5	4.5	4.5	4	4
17	Maintenance cost	5	6	6	6	6	5	5	5	6	4	2
18	Startability	6	6.5	5	5	5	5	5	4	5	2	2
19	Hot driveability	7	7	7	6	7	6	7	7	7	7	7
20	Cold driveability	5	6	8	8	8	8	8	8	8	8	8
21	Torque rise	7	7	7	7	7	7	7	7	7	2	7
22	Durability	6	5.5	7	6	6	6	6	7	8	5	2
23	Heat loss	5	5	5	5	5	5	5	5	5	5	4
24	Fire risk	5	5	6	6	6	6	6	6	6	6	6
25	Idling noise	8	8	5	5	5	3	3	5	4	2	5
26	Torque recoil	8	8	6	5	5	5	5	5	5	4	7

RESULTS

The product of the weighting and the rating for each performance aspect was summed for each power plant and the results are shown in Table 3 below:-

TABLE 3

	Power Plant	Final Score (Rounded to nearest whole number)
1	V-8 gasoline	608
2	6 cyl. gasoline	620
3	V-8 IDI	587
4	6 cyl IDI T/C	556
5	6 cyl IDI Comprex	554
6	6 cyl. DI T/C	(500)
7	6 cyl. DI Comprex	(497)
8	2 str. loop scavenge	(516)
9	2 str. uniflow	(515)
10	Compound	(465)
11	2 stage rotary	(434)

In order to establish the validity of the 'committee method' of rating two re-runs were done for the gasoline engine and the IDI diesels,when the final runs for these power plants were found to be within $\pm 2\frac{1}{2}\%$ of the above figures and the relative order of scores was not found to change. Because of this the final scores from the first complete run shown in Table 3 were taken as representative of the relative merit of the various power plants.

The rating methodology has the disadvantage that a rating of 0 in any aspect can be hidden by good ratings for other aspects and the bracketed figures in Table 3 are for those power plants which scored a 0 (i.e. totally unacceptable) in one or more performance aspects.

The results are revealing in that they immediately indicate that the gasoline power plants are superior to the diesel power plants and that only the indirect injection 4-stroke diesels are viable for the duty considered. All the other diesel power plants are unacceptable due to the inability to score better than zero on one or more performance aspects (generally emissions). With the weighting adopted, the gasoline engine's superiority for passenger car use in America is demonstrated but the closeness of the final scores indicates that only quite minor changes in the weightings would bring the scores equal. It is apparent that in an emissions and fuel conscious environment there are

many applications which would change the individual weighting system sufficiently to make the automotive diesel an attractive alternative to the gasoline engine.

The smaller 6 cylinder gasoline engine has 12 more points than the V-8 entirely on the strength of its better fuel economy and lower first cost.

The potentially viable IDI diesel power plants scored some 50 points or so below the gasoline engines. This is well outside the 15 point scatter found in the re-runs but is sufficiently close to permit their consideration for many applications.

It can be seen that all the other diesel power plants were unacceptable, mainly due to their poor HC and NOx characteristics.

If the total score for each contender is divided by 100, this averaged score can be related to the original merit table. It can immediately be seen that no plant can be called 'good' although both gasoline engines score better than 6, i.e. better than 'acceptable' although not quite 'good'.

The IDI diesel plants on this basis are still better than 'acceptable' although an average score of 6 is not quite achieved.

Certain aspects beyond the scope of this study, such as depletion of world stocks of precious metals due to the use of catalysts or the implications of particulate legislation, cannot be covered by a rating method such as this but, where possible, these other aspects should be considered before any major decisions on automotive power plants are made.

CONCLUSIONS

The rating methodology evolved has allowed different power plants to be compared on a numerical basis.

Its application to the eleven power plants in this study has indicated that gasoline power plants are some 10%'superior' to the diesel power plants for an average light duty application.

The viable diesel power plants, four-stroke IDI's, are sufficiently close to the gasoline engines to allow changes in the importance of some performance aspects, notably fuel economy, to bring them up to the same effective rating.

None of the other diesel power plants were viable for the primary emissions environment.

No diesel power plant would be viable for the secondary emissions environment without considerable advances in technology.

FIG. 6-1

LIGHT DUTY VEHICLE POWER PLANT SURVEY RESULTS

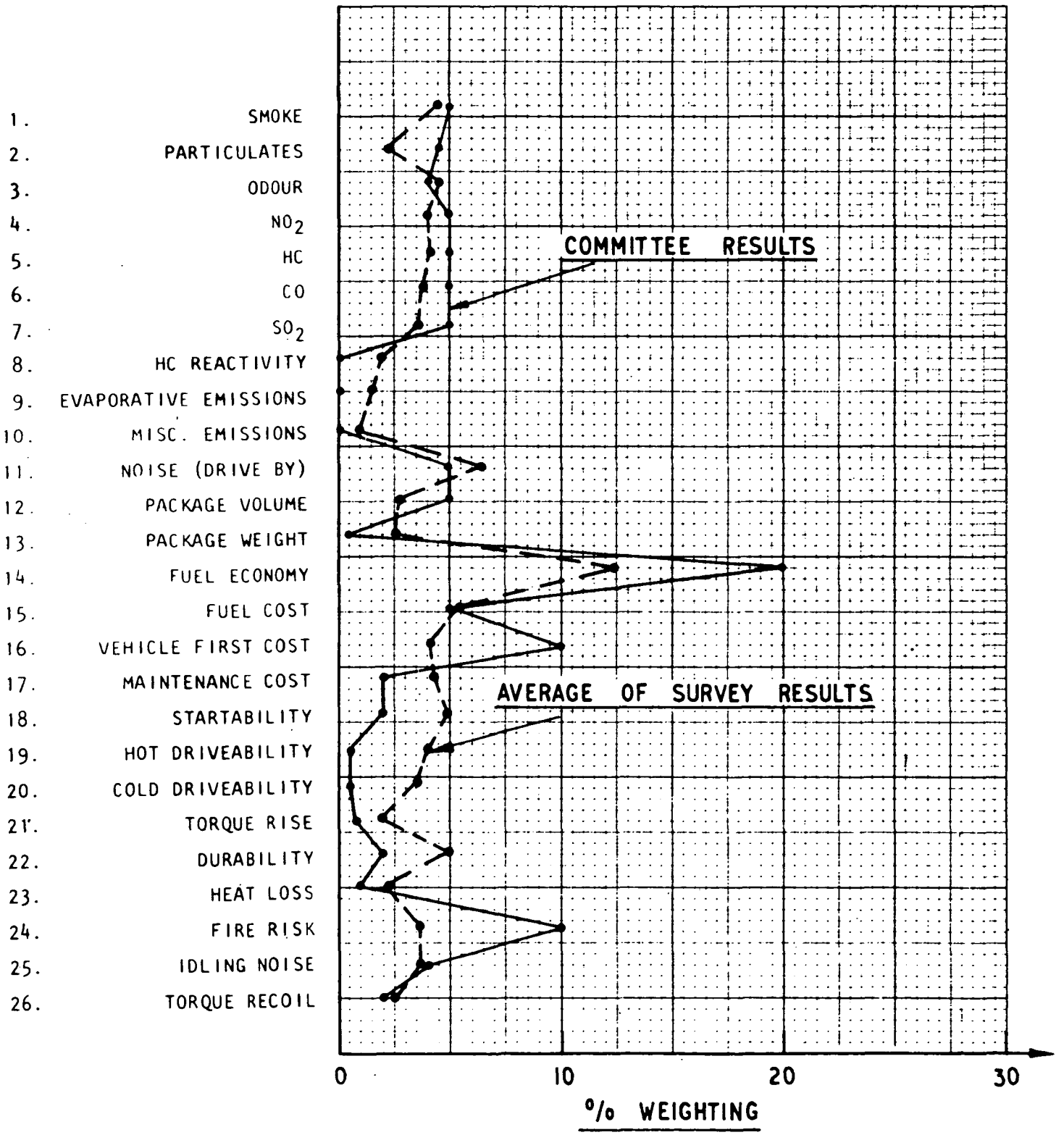

SECTION 7
PROGRAMME PLANS

While this study has confirmed that the diesel engine is a viable alternative power plant for a passenger car and indeed would have advantages in a number of areas, notably in respect of fuel consumption, it has brought out other areas where the diesel engine is less attractive than the gasoline engine. The report has also shown up areas where the technical data is not as complete as would have been desirable for the purposes of the study.

It would be advantageous therefore to carry out a number of experimental programmes aimed partly at filling these gaps in knowledge and partly at overcoming the areas of deficiency in performance.

1. Construction of V-8 naturally aspirated, indirect injection diesel engine

While it is believed that accurate estimates of fuel consumption and exhaust emission levels have been made, these have involved predictions with vehicle power:weight ratios much higher than any for which actual test data are available.

For a convincing demonstration that these performances are possible it is desirable to fit a suitable diesel engine into a 1600 kg (3500 lb) passenger car and obtain a full set of vehicle performance data. This would also provide a convenient demonstration vehicle.

While the time scale for the design and construction of a new engine is likely to be in the region of 30-36 months, it would be possible to produce an engine in a shorter time by carrying out a conversion of an existing gasoline engine. This would in no way affect the accuracy of the vehicle performance, fuel consumption or emissions measurements but could lead to a necessity for compromise in so far as some of the other performance aspects are con-concerned.

2. Pressure Charging Investigations

More data are necessary to refine the predictions for pressure charged engines. With a turbocharger for example, it may be difficult to drive a cycle such as the LA4 with a large number of transients and still have freedom from exhaust smoke, with resulting excessive exhaust CO levels.

Theoretical simulation is very difficult in this area and there would be much to be gained by carrying out comparative test bed and vehicle studies using a turbocharger and as an alternative, the Comprex. It would of course be necessary to use a smaller engine and once again while it would be possible to design and develop a new engine, it will probably be preferable either to

use an existing six cylinder diesel engine such as the Ford "York" or alternatively to carry out a conversion of an existing gasoline engine.

3. Improved Fuel Injection System

There are two problems in the area of the fuel injection equipment. The first results from the high degree of accuracy necessary for acceptable performance and low emissions. This high accuracy leads to high cost and hence to the cost of the fuel injection equipment accounting for some 50% of the difference in cost between a diesel engine and a gasoline engine.

The second arises from the need, for reasons of low emission levels, to have an injection timing which varies with load and speed. This leads to additional expense and to a considerable complication with most mechanical injection systems. Indeed it is this requirement that has spurred work with piezo, accumulator, electro-magnetic and other injection systems. If it could be satisfactorily carried out it might prove advantageous to vary the pumping rate with either load or speed, to use pilot injection, or even to vary the pumping rate during each delivery stroke.

There is much to be said therefore for pursuing work in the areas of novel and lower cost fuel injection equipment.

4. Low Compression Diesel Engines

The interest in the low compression diesel engine lies in the expectation that it will give a lighter, more efficient engine. If exhaust hydrocarbon and odour levels are not to be unacceptable however, it is essential to have a reliable starting and low load running, ignition aid. This might take the form of a high energy spark, a heater plug, an inlet air heater, exhaust recirculation or indeed be of some other form.

It may or may not be possible to produce such a device but in view of the possible advantages it is desirable that work should be carried out to investigate the feasibility of the aid and, if successful, to investigate the actual advantages of a low compression diesel engine.

5. Exhaust Hydrocarbon Formation

While the chemical reactions leading to the formation of NO_x are, at least partially, understood and it should be possible to meet the primary NO_x emissions target of 1.5 g/mile, further reductions in NO_x are made difficult by resulting rises in hydrocarbon levels. Indeed it may prove necessary to use a catalyst to hold hydrocarbon levels down low enough with this primary emissions target. With direct injection engines, it is the rising hydrocarbon levels which make it impractical to attain 1.5 g/mile NO_x.

It is recommended therefore that a fundamental study should be carried out into the mechanism of exhaust hydrocarbon formation. Are the hydrocarbons associated for example with particulate material arising from combustion? Do they result from flame quenching close to the combustion chamber walls? Do they arise from slowburning and subsequent quenching of part of the fuel or alternatively do the last portions of the fuel to be injected have excessively large drops due to changes in the hydraulics of the fuel injection system.

It is possible that some other mechanism may be involved but if the mechanism is understood it could lead to a control of hydrocarbon formation and hence to the development of lower emission diesel engines.

As hydrocarbon levels are always likely to be a problem at the retarded injection timings which are essential for very low NO_x emissions, it is desirable to carry out work aimed at the development of a catalyst with a low 'light off' temperature which would be effective at the low exhaust temperatures which occur at part load in a diesel engine.

6. Modulation Systems for the Control of Exhaust Gas Recirculation

To avoid excessive derating of naturally aspirated engines, it is necessary to modulate exhaust gas recirculation quantities with load and it may also prove desirable to modulate with speed. It may prove to be necessary to reduce the recirculation at peak torque conditions with a pressure charged engine.

Control devices for such modulation in diesel engines are not, so far as Ricardo know, available at this time and those being developed for gasoline engines may suffer problems due to the particulate material in diesel exhaust. It is suggested therefore that work be initiated to develop a practical control system.

7. Improved Starting Aids

The delay required to bring heater plugs up to operating temperature is a considerable subjective problem. The use of a programmed starting sequence can help and indeed such devices are in use, if not actual articles of commerce. "Instant", or more realistically, fast heating plugs would be a considerable advantage however, and a general programme aimed at quick starting under cold ambient conditions is desirable.

8. Demonstration of Diesel Engines for Specialised Applications

This study demonstrates the clear superiority of the diesel engine for taxi cab and light delivery vehicles. Demonstrations in these applications in America in the past have failed due to the inadequate power/weight ratio of the demonstration vehicle or due to the use of unsuitable vehicle/engine combinations.

It is recommended therefore that following the construction or conversion of a suitable engine and an investigation of its performance in a suitable vehicle, a programme should be instituted with a number of these vehicles to demonstrate the advantages and to encourage the conversion of current and future taxi cabs and light delivery trucks to diesel power.

9. Particulate Levels

The relatively high particulate levels which occur in the exhaust from a diesel engine even under clean exhaust conditions, could pose a long term problem. It would be desirable therefore to carry out a fundamental programme aimed at finding the source of these particulates and hopefully therefore at a method of controlling their formation.

It would also be desirable to carry out a programme aimed at the development of a trap which would eliminate, or at any rate reduce, smoke and particulates from an exhaust which contains excessive levels.

Since neither the 'spectra' of particle sizes from a given power plant nor the relative harm which can be caused by particles of a given size and nature is known, it is apparent that this lack of knowledge should be remedied before any legislation is finalised. It is thus suggested that work be intensified in the field of particulate emissions to ensure that legislation is relevant to the needs of the population.

SECTION 8

APPENDIX 1 - LIST OF KEYWORDS

1. SMOKE
2. ODOUR
3. GASEOUS EMISSIONS
4. PARTICULATES
5. NOISE
6. VOLUME
7. WEIGHT
8. FUEL ECONOMY
9. FUEL
10. FIRST COST
11. MAINTENANCE
12. STARTING
13. HOT DRIVEABILITY
14. COLD DRIVEABILITY
15. TORQUE RISE
16. DURABILITY
17. COOLANT HEAT LOSSES
18. FIRE RISK
19. VIBRATION AND TORQUE RECOIL
20. IDLE NOISE
21. RELIABILITY
22. ECONOMICS
23. MANUFACTURE
24. PERFORMANCE
25. DESIGN
26. ANCILLIARIES
27. LUBRICATION

1. SMOKE

Measurement techniques

Legislation

Formation

F.I.E. - timing - injection rate - pilot injection - nozzle

Combustion chamber - D.I. - I.D.I. - compression ratio

E.G.R.

Boosting - turbocharging - comprex - supercharging - ramming

Diesel vs gasoline

Levels vehicle

Levels Test bed

User experience

Public opinion

Endurance

Light load - blue - white - aids

Fuel - quality - dual - additives - alternate

Exhaust system - catalyst - soot filter

Ambient conditions

D.I. vs I.D.I.

Mathematical models

Water injection

2. ODOUR

Measurement techniques - subjective - meter

Legislation

Formation

F.I.E. - timing - injection rate - nozzle

Combustion chamber - D.I. - I.D.I.

E.G.R.

Diesel vs gasoline

Levels - vehicle

Levels - test bed - subjective - meter

User experience

Public opinion

Endurance

Fuel - quality - dual additives - alternate

Light load aids

Exhaust system - catalyst - soot filter

Ambient conditions

Mathematical models

3. GASEOUS EMISSIONS

Measurement techniques - heavy duty - light duty - miscellaneous

Legislation - heavy duty - light duty

Formation

F.I.E. - timing - injection rate - nozzle - pilot injection

Combustion chamber - D.I. - I.D.I. - compression ratio

Fuel - quality - dual - additives - alternate

Water injection

E.G.R.

Boosting - comprex

Diesel vs gasoline

Levels - vehicle

Levels - test bed

Endurance

Light load aids

D.I. vs I.D.I.

Ambient conditions

Catalyst

Cost

Mathematical models

Trends

Exhaust reactor

4. PARTICULATES

Measurement techniques

Legislation

Formation

Combustion chamber - D.I. - I.D.I.

Boosting

Diesel vs gasoline

Levels - vehicle

Levels - test bed

Endurance

Fuel - additives

D.I. vs I.D.I.

Exhaust system - catalyst - soot filter

Ambient conditions

Mathematical models

Toxicity

5. NOISE

Measurement techniques

Legislation

D.I. vs I.D.I.

Exhaust

Intake

F.I.E. - timing - injection rate - pilot injection - nozzle

Combustion chamber - D.I. - I.D.I. - compression ratio

Fuel - quality - dual - additives - alternate

Boosting

Shields

Enclosures

Structure - isolation - materials

Diesel vs gasoline

Levels - vehicle - interior - drive by - stationary

Levels - test bed

User experience

Public opinion

Air cooled vs water cooled

Engine configuration

Combustion

Mechanical

Endurance

6. VOLUME

Configuration

Diesel vs gasoline

Vehicle installation

Air cooled vs water cooled

Specific

7. WEIGHT

Materials

Configuration

Diesel vs gasoline - engine - vehicle

D.I. vs I.D.I.

Bare engine

Air cooled vs water cooled

Specific

8. FUEL ECONOMY

D.I. vs I.D.I.

Fuel - dual - additives - alternate - quality

Boosting

Configuration

Diesel vs gasoline

Vehicle

Test bed

User experience

Economics

Endurance

Light load aids

Thermal efficiency

9. FUEL

Cost - tax - prime

Refinery technique

Quality

Alternate

Additives

Diesel vs gasoline

Trends

Production - trends

10. FIRST COST

F.I.E.

Boosting

Legislation - smoke - emissions - odor - noise

Diesel vs gasoline

D.I. vs I.D.I.

Vehicle

Engine - components

User experience

Economics

Air cooled vs water cooled

Specific cost

Tolerances

11. MAINTENANCE

Engine

F.I.E.

Ancilliaries

Diesel vs gasoline

Methods of improving

I.D.I. vs D.I.

Vehicle

User experience

Economics

Air cooled vs water cooled

Fuel - quality - additives - alternate

Lubrication

12. STARTING

Temperature

F.I.E. - excess fuel - nozzles - timing

D.I. vs I.D.I.

Fuel - quality - alternate - additives - filter clogging

Boosting

Aids - heater plugs - manifold heaters - ether

Diesel vs gasoline

User experience

Smoke

Compression ratio

Sequence

Battery/starter

Cranking speed

Valve timing

Lubricating oil

13. HOT DRIVEABILITY

Diesel vs gasoline

D.I. vs I.D.I.

Vehicle

User experience

Light load aids

F.I.E.

Response time

14. COLD DRIVEABILITY

Diesel vs gasoline

D.I. vs I.D.I.

Vehicle

User experience

Light load aids

Odor

Fuel - alternate - quality

15. TORQUE RISE

Boosting - comprex

F.I.E.

Diesel vs gasoline

I.D.I. vs D.I.

Valve timing

16. DURABILITY

F.I.E.

Emissions devices

Boosting

Diesel vs gasoline

I.D.I. vs D.I.

Vehicle

Test bed

User experience

Economics

Air vs water cooling

Combustion chamber

Lubrication

Exhaust system

Wear

17. COOLANT HEAT LOSSES

Boosting

Diesel vs gasoline

D.I. vs I.D.I.

Vehicle heaters

Test bed

User experience

Specific heat loss

Air vs water cooling

Warm-up time

Thermal loading

Temperature control

Oil cooler

Piston cooling

18. FIRE RISK

Legislation - fuel tanks - general

Diesel vs gasoline

Vehicle

User experience

Statistics

Exhaust system - catalyst

Fuel

19. VIBRATION AND TORQUE RECOIL

Engine mountings

Diesel vs gasoline

Vehicle

User experience

Configuration

Engine installation

Damping

20. IDLE NOISE

Vehicle - absolute - subjective

F.I.E. - pilot injection - injection rate - nozzle - timing

Diesel vs gasoline

D.I. vs I.D.I.

User experience

Public opinion

Air vs water cooling

Configuration

Fuel - quality

Combustion

Mathematical models

Shields

21. RELIABILITY

F.I.E.

Booster

Diesel vs gasoline

D.I. vs I.D.I.

Vehicle

Test bed

User experience

Economics

Air vs water cooling

Lubrication

22. ECONOMICS

F.I.E.

Boosting

Diesel vs gasoline

D.I. vs I.D.I.

Vehicle

User experience

Specific costs

Legislation - smoke - emissions - odor - noise

23. MANUFACTURE

F.I.E. - economics - technology

Combustion system - economics - methods - tolerance

Diesel vs gasoline - economics - technology

D.I. vs I.D.I.

Air vs water cooling

Configuration

Tolerance

24. PERFORMANCE

Vehicle - legislation - boosting - diesel vs gasoline

- D.I. vs I.D.I. - durability - torque rise

- road test - F.I.E.

Test bed - fuel additives - F.I.E. - combustion chamber

- combustion - fuel quality - E.G.R. - boosting

- diesel vs gasoline - D.I. vs I.D.I. - specific

- durability - friction - volumetric efficiency

- thermal efficiency - compression ratio - cylinder

- pressure - fuel alternate - dual fuel - swirl

- valve timing - ambient conditions

- component temperatures

Mathematical models

25. DESIGN

Configuration

Legislation

Combustion system

Boosting

Diesel vs gasoline

Mechanical - bearings + liners

Tolerances

Air cooled vs water cooled

26. ANCILLARIES

Diesel vs gasoline - cost

Emission controllers

Volume

Weight

Servopump

27. LUBRICATION

Water injection

E.G.R.

Diesel vs gasoline

D.I. vs I.D.I.

User experience

Durability

Oil change period

Oil consumption

Fuel - quality

F.I.E.

Cooling

SECTION 9

APPENDIX 2 - LIST OF REFERENCES

As mentioned in section 4 the scope of the literature review was wide ranging, covering internal Ricardo reports as well as freely available published articles.

While many of the internal Ricardo reports are the result of Ricardo sponsored test programmes, others have arisen from research or development projects which have been funded by individual clients of Ricardo. These reports are regarded by Ricardo as confidential between themselves and their client and because of this the report titles in several of the references have been modified to ensure this confidential nature.

1. Diesel emissions as predictors of observed Diesel Odor.
H.E. Dietzmann et al - SAE 720757

2. Noise of small indirect injection Diesel engines.
W.M. Scott - SAE 730242

3. Automotive Diesel engine noise and its control.
M.F. Russell - SAE 730243

4. Design aspects of Low Noise Diesel engines.
S.H. Jenkins et al - SAE 730246

5. Diesel engine exhaust smoke - its measurement, regulation and control.
M. Vulliamy & J. Spiers - SAE 670090

6. Diesel emissions as related to engine variables and fuel characteristics.
Marshall & Fleming - SAE 710836

7. Design factors that effect Diesel emissions.
R.C. Bascom et al - SAE 710484

8. Pre-combustion chamber Diesel engine emissions - a progress report.
R.E. Bosecker & D.F. Webster - SAE 710672

9. Diesel exhaust - a European Viewpoint.
B.W. Millington & C.C.J. French - SAE 660549

10. A stratified charge multifuel military engine - a progress report.
E. Mitchell et al - SAE 720051

11. Exhaust characteristics of the automotive Diesel.
R.C. Schmidt et al - SAE 660550

12. Exhaust emission control in medium swirl rate direct injection Diesel engines.
Parker & Walker - SAE 720755

13. Some effects of fuel injection system parameters on Diesel exhaust emissions.
R.J. Hames et al - SAE 710671

14. The characterisation of odor components in Diesel exhaust gas.
R.S. Spindt et al - SAE 710605

15. The development of the small automotive Diesel in western Europe and its likely role in the U.S.A.
J.H. Pitchford - SAE 215B

16. Reductions of emissions from Diesel engines.
C.J. Walder - SAE 730214

17. Measurement and evaluation of Diesel smoke.
R.C. Bascom et al - SAE 730212

18. Some problems encountered in the design and development of high speed Diesel engines.
C.J. Walder - SAE 978A

19. Diesel fuel properties and exhaust gas - distant relations?
G. McConnell & H.E. Howells - SAE 670091

20. Daimler Benz passenger car Diesel engines - highlights of 30 years of Development.
E. Eisele - SAE 680089

21. Combustion system parameters and their effect upon Diesel engine exhaust emissions.
Pischinger & Cartellieri - SAE 720756

22. Towards higher speeds and outputs from the small Diesel engine.
D. Broome - SAE 730149

23. Diesel engine and highway truck noise reduction.
R.M. Law - SAE 730240

24. Cooperative evaluation of techniques for measuring nitric oxide and carbon monoxide.
J.M. Perez et al - SAE 720104

25. Turbocharged Diesel engine performance at altitude.
J.W. Dennis - SAE 710822

26. Developing a new stratified charge combustion system with fuel injection for reducing emissions in small farm and industrial engines.
M. Miyake - SAE 720196

27. Combustion Characteristics of rotary engines.
K. Yamamoto et al - SAE 720357

28. A new Diesel combustion chamber - the variable throat chamber.
B. Brisson et al - SAE 730167

29. A preliminary model for the formation of nitric oxide in D.I. Diesel engines and its application in parametric studies.
S.M. Shahed et al - SAE 730083

30. School fleet Dieselisation Program.
R. Davis - SAE 650711

31. Delivering the mail with Diesels - the post office department looks at Diesel engines.
G.C. Nield - SAE 650710

32. An example of development in automotive small high speed Diesel engines.
S. Tanaka et al - SAE 978C

33. Pilot injection in Diesel engines.
D.P. 17093 - 1973

34. Review of Combustion Chamber Characteristics.
D.P. 11353A - 1968

35. The automotive Diesel engine in perspective.
Donald - 1st Symposium on low pollution power systems development and AAPS coordination meeting, Ann Arbor, Oct. 1973.

36. Development of an automotive particulate sampling device compatible with the CVS system.
Musser & Bernstein - Esso publication - 1973

37. Smoke Measurement - Instruments & comparison of methods.
Dodd & Spiers - I.Mech.E. proc. 1968-69, 183 pt 3E p157.

38. Influence of fuel properties on Diesel exhaust emissions.
Burt and Troth - I.Mech.E. proc. 1968-69, 183 pt 3E p171.

39. Comparison of 2 litre D.I. and Comet V automotive engines.
D.P. 12897 - 1970

40. The Turbocharged Diesel as a Road Transport Power Unit.
Holmer & Haggh - I.Mech.E. 1970

41. The Breathing and Combustion Requirements of the Small High Speed Diesel Engine - D. Broome - I.Mech.E. 1966

42. Where Phillips stands on the Stirling engine.
Automotive Engineering - July 1973 - p37

43. The state of Development of the Air Cooled Diesel engine.
Dr. Ing. M. Weidenmuller - Ric. Trans. 330

44. The Rotary engines of Yanmar outboard motor.
Yamaoka & Tado - SAE 710581

45. Experiments with a single cylinder engine to aid development of highly supercharged high speed Diesel engines.
MIRA Translation 14/72

46. Performance with economy - The RamAire System.
Percival & Ahrens - SAE 670109

47. Low Compression Ratio IDI Diesels with Glowplug added ignition - a summary of relevant experiments.
D.P. 17555 - 1974

48. Dealing with the design problems of present day Diesel engines.
Prof. Dr. H. List - Ric. Trans. 321

49. Results of development of the Daimler Benz OM 360 Diesel engine.
Dipl. Ing. Klinder & Ing. Kern - Ric. Trans. 318

50. Research on diesel engine exhaust pollution control.
Prof. R. Pischinger - ATZ - 1972

51. Influence of exhaust gas composition by means of exhaust gas recirculation in a pressure charged swirl chamber diesel engine.
Dipl. Ing. Manfred Fortnagel - MTZ - 1972

52. Some problems of current diesel engine development and the outlook for other prime movers.
Urlaub - ATZ - 1972

53. Quieting the diesel with structural changes.
Automobile Engineering - 1972

54. Some investigations on cold starting phenomena in diesel engines.
Austen & Lyn - Proc. I.Mech.E. No. 5 - 1959-60

55. Contribution to the problem of starting and operating diesel vehicles at low temperatures.
Prof. M. Brunner & Dr. H. Ruf - Proc. I.Mech.E. No. 5 - 1959-60

56. Improving temperature control in diesel engined vehicles.
Bisiker & Benford - Proc. I.Mech.E. (AD) No. 8 - 1961-62

57. Some experiences with a differentially supercharged diesel engine.
Dawson et al - Proc. I.Mech.E. Vol. 178, Part 2A No. 6 - 1963-64

58. Vehicle particulate emissions.
Campbell & Dartnell - I.Mech.E. Conference - Air Pollution Control in Transport Engines - 1971

59. Experiments in the control of diesel engine emissions.
Torpey et al - I.Mech.E. Conference - Air Pollution Control in Transport Engines - 1971

60. Metabolism and dietics of "Moteur diesel compensé B" and its result on air pollution.
Brille & Baguelin - I.Mech.E. Conference - Air Pollution Control in Transport Engines - 1971

61. Controlling exhaust emissions from a diesel engine by LPG dual fuelling.
Lyon et al - I.Mech.E. Conference - Air Pollution Control in Transport Engines - 1971

62. Stratification and air pollution.
Witzky - I.Mech.E. Conference - Air Pollution Control in Transport Engines - 1971

63. Diesel engine exhaust emissions and effect of additives.
Nesr et al - I.Mech.E. Conference - Air Pollution Control in Transport Engines - 1971

64. The mechanisms of soot release from combustion of hydrocarbon fuels with particular reference to the diesel engine.
Broome and Khan - I.Mech.E. Conference - Air Pollution Control in Transport Engines - 1971

65. Recent automotive air pollution control legislation in the U.S. and a new approach to achieve control: Alternative engine systems.
Brogan - I.Mech.E. Conference - Air Pollution Control in Transport Engines - 1971

66. Prediction of soot and nitric oxide concentrations in diesel engine exhaust.
Khan et al - I.Mech.E. Conference - Air Pollution Control in Transport Engines - 1971

67. Factors affecting emissions of smoke and gaseous pollutants from direct injection engines.
Khan & Wang - I.Mech.E. Conference - Air Pollution Control in Transport Engines - 1971

68. Exhaust emission control system for the rotary engine.
Muroki - I.Mech.E. Conference - Air Pollution Control in Transport Engines - 1971

69. Symposium on Multi-fuel engines.
Gas & Oil Power 1959

70. Compact long life diesel engine.
Timoney - I.Mech.E. Conference - Transport Engines of Exceptionally High Specific Output - 1968

71. The differential compound engine: Interim test results and assessment of future development.
Wallace et al - I.Mech.E. Conference - Transport Engines of Exceptionally High Specific Output - 1968

72. Curtis-Wright's rotating combustion engine - compact, lightweight power.
Jones - I.Mech.E. Conference - Transport Engines of Exceptionally High Specific Output - 1968

73. Small high speed diesel engines.
Westwell & Blum - I.Mech.E. Conference - Mechanical design of diesel engines - 1967

74. Effects of multiple introduction of fuel on performance of a compression ignition engine.
C.P. Guptor et al - SAE 929A

75. The nature and cause of diesel emissions.
B.W. Millington - I.Mech.E. Conference - Motor vehicle air pollution control - 1968

76. Some experiments on the mode of action of a diesel smoke suppressant additive.
B.E. Knight & C.H.T. Wang - I.Mech.E. Conference - Motor vehicle air pollution control - 1968

77. Natural gas engine for buses meets 1975 emission limits.
Automotive Engineer - June 1972

78. Mid-Range Diesels Mean Savings for Delivery Fleet.
Diesel and Gas Turbine - July 1973

79. Hybrid Diesel - Electric bus may help cities to lick noise-air-pollution problems.
Automotive Engineering - August 1970 p42.

80. Influence of fuel properties and influence of anti-smoke additives on Diesel exhaust smoke.
McConnell et al - SAE Journal, March '68 p36.

81. Novel supercharger retains smaller engine economy while providing larger engine performance. SAE Jnl. March '68, pp 62-65.

82. Alternative non polluting power sources.
SAE Journal, Dec. '68 p40.

83. Noise in engineering and transportation and its effect on the Community.
T. Priede - SAE 710061

84. The use of specially designed covers and shields to reduce Diesel engine noise.
G. Thien - SAE 730244

85. Diesel exhaust odor - its evaluation and relation to exhaust gas composition.
F.G. Rounds & H.W. Pearsall - SAE 863 - 1956

86. A sampling smokemeter for automotive Diesel engine testing.
E.G. Searle - SAE 436C - 1961

87. CRC Investigation of Diesel smoke measurement.
J.B. Durant - SAE 801A - 1964

88. The measurement and Control of Diesel exhaust smoke emission.
J.D. Savage - SAE 440B - 1962

89. The effect of the Vigom Process on the combustion in Diesel engines.
SAE 929B

90. 1971 European Diesel engine performance survey 10-500 bhp.
D.P. 13718

91. Nissan Emissions Results
Ex E.P.A. - 1973

92. IDI Diesel Engine - Performance development and piston cooling tests.
D.P. 13679 - 1971

93. 6 cylinder IDI Diesel Engine, Progress Report No. 1, Jan-March 1971.
D.P. 13677 - 1971

94. For Passenger Cars Diesels Must Be Better.
C.J. Walder - SAE Jnl. Nov. '65, Vol. 73, No. 11, p78.

95. A European contribution to lower vehicle exhaust emissions.
(Eindhoven Conf. 1971) - D.P. 13538

96. Work carried out on IDI engine, August '69 - November '70.
D.P. 13277

97. IDI engine - effect of valve timing on performance.
D.P. 12921 - 1970

98. Note on the effect of exhaust manifold arrangements on a 138 in^3 Comet V engine.
D.P. 12812 - 1970

99. NO_x emissions from single cyl. engine in D.I. and Comet V builds.
D.P. 12429 - 1970

100. Design Developments in European Automotive Diesel engines.
Ricardo & Pitchford - SAE Journal (trans) Vol. 41-3 p405 - 1937

101. Exhaust Emissions Test Program on automotive IDI diesel engine and diesel car.
D.P. 14442 - 1971

102. The Diesel is Friendly to its Environment.
Garthe - Deutz Publicity - 1971

103. Reducing Hydrocarbons and Odor in Diesel Exhaust by Fuel Injector Design.
Ford et al - SAE 700734

104. Diesel Fuel Specification and Smoke Suppressant Additive Evaluations.
J.G. Brandes - SAE 700522

105. 4 cylinder Comet Mk V Engine - Progress Report no. 18.
D.P. 4680 - 1958

106. 6 cylinder 5.5 litre, Comet V, Progress Note No. 3. CARB Emissions Tests.
D.P. 16524 - 1973

107. Performance of a Catalyst Box on a Direct Injection Engine.
D.P. 15867 - 1972

108. Effect of Inlet Air Humidity and Temperature on Diesel Exhaust Emissions.
S.R. Krause et al - SAE 730213

109. Surveying Tests of Diesel Smoke Suppression with fuel additives.
Takeshi Saito - SAE 730170

110. Factors Affecting Smoke and Gaseous Emissions from Direct Injection Engines and a Method of Calculation.
I.M. Khan et al - SAE 730169

111. Diesel Engine Noise Reduction by Combustion and Structural Modifications.
D.D. Tiede & D.F. Kabele - SAE 730245

112. The Light Duty Diesel Engine.
D.P. 16494 - 1973

113. 6 cylinder 5.5 litre, Comet V, Progress Note No. 4, CARB Emissions Tests.
D.P. 16660 - 1973

114. 6 cylinder 5.5 litre, Comet V, Progress Note No. 5, CARB Emissions Tests.
D.P. 16736 - 1973

115. The Diesel
R. Wakefield - Road & Track - Sept. 1973

116. 6 cylinder 5.5 litre, Comet V, Progress Note No. 6, CARB Emissions Measurement.
D.P. 16878 - 1973

117. Noise Test on IDI engined vehicle.
D.P. 16947 - 1973

118. Engine and vehicle emissions reduction program.
Interim Report No. 1.
D.P. 17095 - 1973

119. NO_2 in Diesels - Ricardo Research.
D.P. 17138 - 1973

120. 6 cylinder IDI Diesel. Progress Note No. 4.
D.P. 14208 - 1971

121. 6 cylinder IDI Diesel. Progress Note No. 3.
D.P. 14068 - 1971

122. Investigation into the Compression Ratio limits of a Typical Comet III type production engine.
D.P. 4494 - 1957

123. Note on the Effect of Nozzle Heat Shields on a typical Small Comet V engine.
D.P. 4417 - 1957

124. Diesel car - Ricardo Report - Jan. 1956

125. Diesel car fuel consumption with and without fluid drive.
Ricardo GO.3712 - 1956

126. Ricardo Memo - Diesel car - Nov. 1956

127. Comet V automotive diesel. Progress Report No. 5.
D.P. 9715 - 1966

128. Note on the Mechanical behaviour of the IDI diesel engine during test running.
D.P. 3926 - 1956

129. Comet Mk V Diesel Engine - 6 cylinder.
D.P. 4566 - 1958

130. Progress Report on diesel engine - 4 cylinder. Ricardo Comet Mk V Combustion System.
D.P. 3963 - 1956

131. Influence of Cetane Number on Compression Ignition Engine Performance.
D.P. 13740 - 1971

132. Diesel Car - Fuel & Oil Consumptions - Internal Ricardo memo 1.10.54

133. Diesel Car.
Ricardo GO.2930 - 1954

134. Diesel Car.
Ricardo GO.3279 - 1954

135. 4 cylinder, Comet Mk V. Report on an investigation into Factors Affecting Auxiliary Hole Blocking of the Pintaux nozzle.
D.P. 4673 - 1958

136. Diesel fuel rating at high speed - Report on preliminary tests on the E12 H.S. unit to observe ignition delay.
D.P. 4547 - 1958

137. 4 cylinder, Comet Mk V Progress Report No. 2.
D.P. 4443 - 1957

138. 4 cylinder, Comet Mk V Engines - Progress Report No. 12.
D.P. 4550 - 1958

139. 4 cylinder, Comet Mk V Engines - Progress Report No. 13.
D.P. 4573 - 1958

140. 4 cylinder, Comet Mk V Engines - Progress Report No. 15.
D.P. 4617 - 1958

141. Induction Ram.
D. Broome - Automobile Engineer - April, May, June 1969.

142. Report on the Conversion of a Ford Zephyr car to diesel.
D.P. 12093 - 1969

143. V8 IDI Diesel engine. Progress Note No. 10.
D.P. 5761 - 1960

144. Further supercharging tests on a 6 cylinder Comet V engine.
D.P. 5379 - 1960

145. 4 cylinder automotive Comet Mk V Engine - Progress Note No. 1.
D.P. 5084 - 1959

146. 4 cylinder automotive Comet Mk V Engine - Progress Note No. 2.
D.P. 5137 - 1959

147. 4 cylinder automotive Comet Mk V Engine - Progress Note No. 3.
D.P. 5294 - 1959

148. 4 cylinder automotive Comet Mk V Engine - Progress Note No. 4.
D.P. 5353 - 1960

149. 4 cylinder automotive Comet Mk V Engine - Progress Note No. 6.
D.P. 5574 - 1960

150. 4 cylinder automotive Comet Mk V Engine - Progress Note No. 9.
D.P. 5678 - 1960

151. Diesel Car - Conversion to Comet V.
D.P. 3405 - 1955

152. Diesel engine - Modifications to Combustion Chamber.
D.P. 3394 - 1955

153. Report on work carried out on diesel car.
D.P. 3672 - 1955

154. The Ricardo Comet V Combustion System.
D.P. 5834 - 1960

155. Notes on the Nozzle life of the diesel engined vehicle.
D.P. 5545 - 1960

156. Diesel engined vehicle - (Effect of mods to combustion chamber).
D.P. 4881 - 1959

157. Further Notes Regarding Nozzle Life on the diesel engined vehicle.
D.P. 5754 - 1960

158. V8 IDI diesel engine - Progress Note No. 2.
D.P. 5020 - 1959

159. V8 diesel engine - Progress Note No. 4.
D.P. 5158 - 1959

160. 4½ litre Comet Mk V - Progress Report No. 1.
D.P. 5169 - 1959

161. V8 IDI diesel engine - Progress Note No. 6.
D.P. 5213 - 1959

162. 4½ litre Comet Mk V six cylinder engine - Progress Report No. 2.
D.P. 5260 - 1959

163. V8 IDI diesel engine - Progress Note No. 7.
D.P. 5323 - 1959

164. Quiet Idling Investigations - Assessment of Diesel Car Fitted with Quiet Idling Device.
D.P. 11615 - 1969

165. A Technical Appraisal of the Clarke Rotary Piston Machine as a Basis of an Internal Combustion Engine. - D.P. 16199 - 1973

166. A new class of Rotary Piston Machine suitable for Compressors, pumps and internal combustion engines.
Clarke et al - SAE Proceedings Vol. 186 - 62/72.

167. 6 cylinder D.I. Engine Performance Calibration.
D.P. 15811 - 1972

168. Results from a short series of CARB Emission Tests run on a Comet V Diesel Engine.
D.P. 16815 - 1973

169. A Study of the Exhaust Emissions Characteristics of a Turbocharged Direct Injection Engine.
D.P. 16272 - 1973

170. A Study of the Exhaust Emission Characteristics of a Naturally Aspirated Direct Injection Engine.
D.P. 16470 - 1973

171. A Summary of a Research Project - Diesel Emissions. S.N. 16374.

172. Unclassified data sheet listing Comet engines - 1973.

173. Meeting between a client and Ricardo.
D.P. 17358 - 1973

174. A review of low noise Diesel engine design at ISVR.
Grover & Lalor - Jnl. Sound & Vib. No. 3, 1973 p403.

175. A review of vehicle noise studies - with a reference to some recent research on petrol engine noise.
J.A. Raff & R.D.H. Perry - Jnl. Sound & Vib. No. 3 1973 p433.

176. Comprex Supercharging - a progress report - Presentation to E.P.A. by A. Mayer, Brown Boveri.

177. Comprex Supercharger for Passenger Car Diesel engines.
Prof. E. Eisele - D.Benz report to E.P.A. - Sept. '73

178. Notes on a visit to Brown Boveri, re. Comprex, Dec. 1972.
E.P.A. note by C.F. Bachle

179. Characterization of particulates and other non-regulated emissions from Mobile sources and effects of exhaust emissions control devices on these emissions. Report for E.P.A, APTD 1567, 29 Oct. '73. Pages 160-163 - Mercedes 220D vehicle.

180. A Report on the Emission Performance of the Ford Stratified Charge Engine Using the 1975 Test Procedure.
E.P.A. Report 72-2 - August 1971

181. An evaluation of three Honda compound Vortex controlled combustion (CVCC) Powered vehicles.
E.P.A. Report 73-11 - Dec. 1972

182. Exhaust Emissions Analysis of Two Wankel Powered Cars Furbished by the U.S.A.T.A.C.
E.P.A. Report 73-10 - Sept. 1972

183. Evaluation of the Texaco Stratified Charge (TCCS) M151 Army Vehicle.
E.P.A. Report 73-27 - June 1973

184. Vehicle Test Report No. 3 - Peugeot diesel.
E.P.A. Report - 16th July '73

185. Vehicle Test Report No. 2 - Opel diesel.
E.P.A. Report - 16th July '73

186. Vehicle Test Report No. 8 - '72 EPA Ford.
E.P.A. Report - 7th Sept. '73

187. Vehicle Test Report No. 7 - EPA Ford.
E.P.A. Report - 7th Sept. '73

188. Final Report: Exhaust Emissions from a Mercedes-Benz Diesel Sedan.
E.P.A. Report 73-6 - July 1972

189. Emissions from a pick-up truck retrofitted with a Nissan Diesel Engine.
July 1973 - From E.P.A. 29/10/73

190. EPA diesel study status -First symposium on low pollution power systems development.
Oct. 19th 1973 - Presented by J.J. McFadden - from EPA 29/10/73

191. Exhaust Emissions from three diesel-powered passenger cars.
March 1973 - from EPA 29/10/73

192. M.W. Kellog Study, Ann Arbor, Michigan 48105.
Letter from J. DeKany to E. Stork, MSAPC - from EPA 21/9/73

193. Letter referring to Meeting with Mobil on Impact of Diesel on the oil industry.
Letter dated 21.8.73 from T. Austin of EPA in reply to AFAE - from EPA 21/9/73

194. Task 17 final report. Potential increased production of Automotive diesel fuels. Submitted to EPA office of Air Programs Division of Control Systems Contract No. CPA 70-68 - from EPA 21/9/73.
Submitted by M.W. Kellog Company, Texas, Dec. 1st 1972

195. Notes on a visit of representatives to Bridge Works on 26th Sept. 1962 - by C.J. Walder - D.P. 6817

196. Notes on the performance of wide cut gas oil in a light duty IDI diesel vehicle.
D.P. 6820 - 3rd Oct. 1962

197. 6 cylinder $2^1/4$ litre - Comet Progress Report No. 1. - Oct. 10th 1962
D.P. 6839

198. Road fuel consumption for the petrol and diesel versions of the Austin A60 and Morris Oxford saloon cars.
D.P. 7529 - 27th Nov. 1963

199. Notes on the 6-cylinder 6 litre engine.
D.P. 6806 - 26th Sept. 1962

200. Ricardo High Speed Engine Pump Injector Tests. Interim Report.
D.P. 15200 - 1972

201. Report on a program of noise measurements carried out on an IDI Diesel Engine.
D.P. 15247 - 1972

202. List of Ricardo Comet V Diesel Engines currently in production.
D.P. 14378 - 1971

203. Diesel Engine Exhaust Emissions. Report No. 5.
D.P. 14168 - 1971

204. Client/Ricardo Technical Meeting.
D.P. 14278 - 1971

205. 3 cylinder Comet V.
D.P. 4381 - 1957

206. 4 cylinder Comet Mk V Engines. Report No. 17.
GO File 4661 -1958

207. 6 cylinder $4\frac{1}{2}$ litre engine fitted with Ricardo Comet V cylinder head.
D.P. 5652 - 1960

208. An analysis of some engine test results on an IDI diesel engine.
GO File 4725 - 1958

209. 4 cylinder Comet Mk V Engine.
GO File 4776 - 1958

210. 4 cylinder Comet Mk V Diesel Engines. Report No. 18.
GO File 4817 - 1958

211. Supercharging tests on a Comet V Engine.
GO File 5233 - 1959

212. Report on Diesel Engine 6 cylinder. - Ricardo Comet V head.
GO File 458 - D.P. 4458 - 1958

213. Volumetric Efficiency of Comet Engines.
D.P. 8066 - 1964

214. Emission tests on a 2.25 litre Diesel Engined vehicle.
D.P. 16800 - 1973

215. Road test on a diesel car. Unclassified document.

216. Noise tests on a diesel vehicle. 4 cylinder 2 litre Comet Mk V engine.
GO File 4933 - 1959

217. 4 cylinder Comet Mk V diesel engine. Report No. 1.
GO File 4409 - 1957

218. Diesel engine exhaust emissions. Report No. 6.
D.P. 14443 - 1971

219. Estimated friction losses for 6 cylinder Comet Mk V and D.I. engines.
R & Co. Drg. No. D18662 - 1966

220. Hybrid heat engines/electric systems. A summary of a feasibility study carried out.
D.P. 14670 - 1972

221. Interim report of noise measurements of a BLMC 2.521 engine.
D.P. 14767 - 1972

222. Ford Zephyr car fitted with a 4 cylinder IDI diesel engine.
1975 CVS Emission Tests.
D.P. 14913 - 1972

223. Some notes on the selection of cylinder size and arrangement for small high speed automotive engines using the Ricardo Comet Mk V combustion system.
D.P. 15108 - 1972

224. Timed inlet and exhaust systems for a 6 cylinder prechamber diesel engine.
D.P. 15130 - 1972

225. The prospects of the diesel engine to satisfy the U.S. pollution regulations.
D.P. 15448 - 1972 and R & Co. Memo 1973

226. 6 cylinder engined diesel vehicle.
D.P. 15537 - 1972

227. 4 cylinder 2 litre Comet V. Performance calibration in modified build.
D.P. 16210 - 1973

228. Future Power Units for Automobiles and Commercial Vehicles.
D.P. 16256 - 1973

229. Opel Rekord Diesel 2100D.
Described briefly in ATZ Vol. 75, No. 1 - 1973 p27.

230. Preliminary study of a low emissions diesel engine for use in passenger cars.
D.P. 16424 - 1973

231. Summary of Ricardo results showing effect of fuel quality on diesel engine emissions.
D.P. 16484 - 1973

232. The dynamic injection timing requirements of small high speed diesel engines using Ricardo Comet combustion chambers.
D.P. 4143 - 1957

233. The unloading mechanism in distributor pumps. Diesel engine with 3 mm fuel pipes.
D.P. 4170 - 1957

234. Further thoughts on the mechanism of unloading in distributor pumps.
D.P. 4145 - 1957

235. Comet V fuel injection pump tests.
D.P. 3910 - 1956

236. Comet V fuel injection pump tests.
D.P. 3990 - 1956

237. Comet V fuel injection pump tests.
D.P. 3995 - 1956

238. Comet V fuel injection pump tests.
D.P. 3550 - 1955

239. Test to establish the acceptable range of injection timings on the Comet III diesel engine when fitted with a 6 mm. fuel pump.
D.P. 4255 - 1957

240. Report on the work carried out on a high ratio Comet Mk V engine between April - November 1958.
D.P. 4862 - 1958

241. Comet Mk III diesel engine - Comparison of exhaust smoke rating with high and low compression ratio.
D.P. 4899 - 1959

242. Comparison tests on $2^1/4$ and 2 litre engines using fuels with and without the addition of $\frac{1}{2}$% by volume isopropyl nitrate.
D.P. 4221 - 1957

243. Ricardo letter to Client - 28th Jan. 1966

244. IDI Diesel engine.
GO File 3971 - 1956

245. Modifications carried out on a diesel car.
GO File 4508 - 1958

246. Report on Comet V Diesel Engine 6 cylinders.
GO File 4718 - 1958

247. 4 cylinder Comet Mk V Engine. Report No. 22.
GO File 5309 - 1959

248. Note on high speed running of an IDI diesel engine.
D.P. 5464 - 1960

249. Notes on condition of nozzles in a diesel car.
GO File 5469 - 1960

250. Comments on indicator diagrams and peak pressure measurements obtained on an IDI diesel engine.
GO File 5612

251. Diesel Estate Car.
GO File 5297 - 1959

252. 3 cylinder Comet V engine cold starting tests.
GO File 4586 - 1958

253. Diesel Estate Car.
GO File 5494 - 1960

254. 4 cyl. IDI diesel engine.
D.P. 5785 - 1960

255. The influence of fuel composition on emissions of carbon monoxide and oxides of nitrogen.
Carr et al - Univ. of California - SAE 700470

256. Investigation of Combustion Phenomena in a Swirl Chamber Compression Ignition Engine using Schlieren Techniques.
A.B. Allen and A. Khin - Univ. of Toronto - SAE 700500

257. The FL413 - A New Series of Deutz Air-Cooled V type Diesel Engines.
Hans-Ulrich Houe - Deutz - SAE 700028

258. Diesel emissions as related to engine variables and fuel characteristics.
Marshall and Fleming - U.S. Bureau of Mines - SAE 710836

259. Automotive Particulate Emissions and their Control.
Habibi - Du Pont de Nemours - SAE 710638

260. Emission Characteristics of Natural Gas as an Automotive Fuel.
Fleming and Allsup - Bureau of Mines - SAE 710833

261. The variable - Displacement Engine: An Advanced concept powerplant.
Welsh and Riley - Thermo Mechanical Systems - SAE 710830

262. The effect of exhaust system geometry on exhaust dilution and Odor intensity.
Colucci and Barnes - G.M. Corp. - SAE 710219

263. Cooperative evaluation of techniques for measuring hydrocarbons in diesel exhaust.
(A CRC report) Wagner and Johnson - SAE 710218

264. Effectiveness of exhaust gas recirculation with extended use.
Musser et al - SAE 710013

265. Influence of Operating Cycle on Noise of Diesel Engines.
Anderton & Baker - ISVR - SAE 730241

266. Reducing noise from heavy diesel trucks by engine compartment shielding.
Ronnhult - Saab Scania - SAE 730682

267. Diesel engine noise reduction hardware for vehicle noise control.
Jenkins & Kuehner - Cummins Engine Co. - SAE 730681

268. Photochemical Reactivity of Diesel Exhaust.
Bureau of Mines - RI 7514 - 1971

269. Diesel emissions reinventoried.
Bureau of Mines - RI 7530 - 1971

270. Merits of the Ricardo combustion systems.
Letter to Editor - Gas and Oil Power - 1953

271. The small high speed diesel engine.
B.W. Millington - Proc. I.Mech.E. Vol. 18 pt IV - 1965

272. Optimisation of diesel engine parameters at high specific output.
D. Broome - UDK 629. 1-445: 621.436.003.1 - 1973 (Conference - Belgrade Yugoslavia)

273. Reducing exhaust emissions from diesels.
Automobile Engineer - 1971

274. Looking in on diesel combustion.
W.M. Scott - SAE 690002

275. Recent developments in diesel engine research at the Ricardo laboratories.
W.M. Scott - Entropie No. 48 - 1972

276. Some problems encountered in the design and development of high speed diesel engines - C.J. Walder - SAE 978A - repeat of ref. 18

277. What problems still restrain the small automotive diesel engine.
Pitchford et al - FISITA Conference 1964

278. Some more light on diesel combustion.
Alcock & Scott - Proc. I.Mech.E. 1962-63 No. 5

279. Development of a High Speed Four Cylinder Diesel Engine under consideration of the existing machine tools equipment for the production of the gasoline engines.
H. Weitzel - I.Mech.E. Conf. Publication 19 - 1973

280. High Speed Diesel Engines.
H.R. Ricardo - Institution of Automobile Engineers - 1926-30

281. Diesel engines.
H.R. Ricardo - Royal Society of Arts - 1931

282. High Speed diesel engines applied to Motor Vehicles.
R.L. Stafford - Newark Engineering Society - 1932

283. High Supercharging of a C.I. Engine.
C.W.R. Smith - Engineer - 1938

284. Looking at diesel combustion.
Hempson & Scott - New Scientist - Vol. 6 pp 1134-37.

285. Diesel engines for road transport.
Sir H.R. Ricardo - Engineering - 1948

286. Ricardo Combustion Systems for High Speed Compression Ignition Engines. Unclassified publication - 1947.

287. Papers on small high speed diesel engines.
Proc. I.Mech.E. 1954-55 - No. 8 - pp 209-246

288. Road Test Reports - Peugeot 204, Mercedes 220D, 240D & 230/4, Opel Rekord, and Peugeot 504. Diesel & Gasoline Comparisons (French) L'Action - Feb. 1974

289. Some problems arising from a wider use of the small diesel engine.
J.H. Pitchford - The Oil Engine and Gas Turbine - 1953

290. Future of the high speed reciprocating internal combustion engine.
J.H. Pitchford - CME - 1960

291. The high speed diesel engine.
H.R. Ricardo - Diesel engine users association - 1930

292. Diesel smoke suppression by fuel additive treatment.
C.O. Miller - SAE 670093

293. Smoke reduction in diesel engines.
A.W. Carey - SAE 670224

294. Diesel engine exhaust smoke. The influence of Fuel Properties and the effects of using Barium-containing fuel additive.
D.W. Golothan - SAE 670092

295. The differential compound engine.
F.J. Wallace - SAE 670110

296. Factors influencing diesel emissions.
Marshall and Hurn - SAE 680528

297. Relation of lean combustion limits in diesel engines to exhaust odor intensity.
Barnes - SAE 680445

298. Effect of design revisions on two stroke cycle diesel engine exhaust.
D.F. Merrion - SAE 680422

299. A flame ionisation technique for measuring total hydrocarbons in diesel exhaust.
Johnson et al - SAE 680419

300. Some Notes on Diesel Cold Starting Aids.
D.P. 17750 - 1974

301. Relation between noise and basic structural vibration of diesel engines.
T. Priede et al - SAE 690450

302. Does turbocharging increase diesel engine noise? - observations on the generation, emission and reduction of diesel engine noise.
R. Wolfgang Hempel. - SAE 680406

303. The noise problem of air cooled diesel engines - measures towards its reduction with general observations and specific results.
O. Cordier& G. Reyl - SAE 680405

304. Unaided starting of diesel engines.
T.W. Biddulp & W.T. Lyn - SAE 680103

305. Development of Mitsubishi DC2 Series V-Type Diesel Engine.
Kenj Okamura & Kiji Yamanda - SAE 690745

306. Measurement of Automotive Passby Noise.
Ralph K. Hillquist & Richard A. Battis - SAE 725275

307. Motor Vehicle Noise identification and analysis of situations contributing to annoyance.
William J. Galloway & Glenn Jones - SAE 725276

308. Future trends in energy conversion systems.
H .W. Welsh - SAE 660603

309. A method for estimating and graphically comparing the amounts of air pollution emissions attributable to automobiles, buses, commuter trains and rail transit.
J.W. Scheel - SAE 720166

310. Factors affecting diesel smoke in highway operation.
W.A. Howe - SAE Golden anniversary diesel engine meeting - 1955

311. Dimensions of diesel fuel performance: Design, depressants and response.
B.L. Michel and L.D. Fergesen - SAE 660371

312. Conversion of high speed,air cooled diesel engines from precombustion chamber process to direct injection.
H. Linnenkohl - SAE 660010

313. Future development of free piston gasifier turbine combinations for vehicle traction.
F.J. Wallace et al - SAE 660132

314. The role of flow improvers in solving autodiesel winter fuel problems.
K.A. Beyreis et al - SAE 660372

315. Piston Cooling.
C.C.J. French - SAE 720024

316. Noise source definition - interior vehicle noise.
R.J. Vargovick - SAE 720274

317. The effect of fuel and vehicle variables on polynuclear aromatic hydrocarbon and phenol emissions.
G.P. Gross - SAE 720210

318. Reduction of diesel smoke in California.
M.L. Brubacher - SAE 660548

319. Effect of air swirl on smoke and gaseous emissions from D.I. diesel engines.
I.M. Khan et al - SAE 720102

320. Comet V automotive diesel engine - Progress Report No. 4.
D.P. 9458 - 1966

321. Analysis of reported tests on a 6 cylinder turbocharged engine.
D.P. 9451 - 1966

322. Comet V automotive diesel engine.
D.P. 9419 - 1966

323. Ricardo Petter high speed 80 x 95 mm D.I.
D.P. 9361 - 1966

324. 1.5 litre diesel car.
D.P. 9319 - 1966

325. Report of some tests carried out on a 1.5 litre diesel car.
D.P. 9254 - 1966

326. Comet V automotive diesel engine.
D.P. 9241 - 1966

327. 4 cylinder IDI diesel engine of about 3 litres.
D.P. 9231 - 1966

328. 4 cylinder IDI diesel engine of about 3 litres.
D.P. 9056- 1966

329. Comet V automotive diesel engine.
D.P. 9048 - 1966

330. 6 cylinder indirect combustion diesel engine 5½ litre.
D.P. 10794 - 1968

331. 1.5 litre Comet VA (4 cyl).
D.P. 10700 - 1968

332. PHS 80 x 95 mm engine. A comparison of toroidal D.I. and Comet Mk V combustion systems.
D.P. 10698 - 1968

333. Comet V automotive diesel engine.
D.P. 10591 - 1968

334. Comet V automotive diesel engine.
D.P. 10485 - 1967

335. Comet Vb engine, 4 cyl, 2½ litres.
D.P. 10191 - 1967

336. Comet Vb engine, 4 cyl, 2½ litres. D.P. 10042 - 1967

337. Comet V automotive diesel engine.
D.P. 10018 - 1967

338. 2 litre Comet V - Heat losses to water and lubricating oil.
D.P. 9942 - 1967

339. 4 cylinder 2 3/4 litre D.I. engine.
D.P. 9931 - 1967

340. Comet Vb engine, 4 cyl, 2½ litres.
D.P. 9924 - 1967

341. Toothed belt timing drives endurance tests on a 2 litre diesel engine.
D.P. 9841 - 1967

342. Comet Mk Vb engine, 4 cyl, 2½ litres.
D.P. 9840 - 1967

343. Comet Mk Vb engine, 4 cyl, 2½ litres.
D.P. 9814 - 1967

344. Some notes on the theory of induction ram.
D.P. 9745 - 1967

345. The application of induction ram techniques to four stroke diesel engines.
D.P. 9740 - 1967

346. 4 cylinder $2^3/4$ litre D.I. engine..
D.P. 9690 - 1966

347. The position in regard to small engine D.I. development to Nov. 1966.
D.P. 9634 - 1966

348. 4 cylinder IDI diesel engine of just less than 3 litres.
D.P. 9480 - 1966

349. 4 cyl. diesel Comet V conversion.
D.P. 13320 - 1970

350. 6 cyl. IDI diesel.
D.P. 13811 - 1971

351. Exhaust emissions of an IDI diesel engine.
D.P. 13766 - 1971

352. 1000 hr endurance test of a DI diesel engine.
D.P. 11449 - 1968

353. Notes on work with ram pipes on an IDI diesel engine.
D.P. 11507

354. 1.5 litre Comet VA.
D.P. 11020 - 1968

355. 2.5 litre Comet Mk Vb engine.
D.P. 11105 - 1968

356. Possibilities for induction ram on small high speed diesel engines.
D.P. 11166 - 1968

357. Notes on exhaust manifold layout for four stroke naturally aspirated engines and its effect on engine performance.
D.P. 11167 - 1968

358. Exhaust emission investigation on a typical prechamber diesel engine.
D.P. 11187/11188 - 1968

359. Comet V automotive diesel engine.
D.P. 10848 - 1968

360. 4 cyl. $2^3/4$ litre Comet V.
D.P. 10975 - 1968

361. Diesel engine design study.
D.P. 10990 - 1968

362. Turbocharged loop scavenge engine.
S.H. Henshall - Proc. I.Mech.E. Vol. 177 No. 6 - 1963

363. The future of lightweight high-speed diesel engines in the automotive and agricultural fields.
J.G. Dawson & N.M.F. Vulliamy - Proc. I.Mech.E. Vol. 177 No. 38 - 1963

364. Nitrogen oxides and other toxic gases in diesel engine exhausts.
H. Middledich - Proc. I.Mech.E. Vol. 179 Part 1 1964-65

365. The diesel engine in association with the gas turbine.
E. Chatterton - Proc. I.Mech.E. Vol. 174 No. 10 - 1960

366. The high speed heavy duty diesel engine, its development, design and application.
E. Schmidt - Proc. I.Mech.E. Vol. 174 - 1960

367. Noise and vibration problems in commercial vehicles.
T. Priede - J. Sound Vib. (1967) 5(1), 129-154.

368. A Summary of Turbocharging Investigations in 1966.
D.P. 17543 - 1974

369. Automotive Piston engine noise and its reduction - a literature survey.
W.W. Soroka & C-S.F. Chien - SAE 690452

370. Engineering know-how in engine design. Part 20. SAE SP-369.1972
Acoustics and noise. Vehicle noise measurement. Noise legislation on product design. Abatement of structural noise. Practical noise control.

371. The diesel engine as a source of commercial vehicle noise.
P.E. Waters et al - Proc. I.Mech.E. - 1970

372. Statistical investigation into diesel engine noise.
Dr. Ing. W. Hempel - CIMAC Working Group Paper - given to I.Mar.E. Dec. 1970 (I.Mar.E. Vol. 72)

374. The Performance of BP Vanellus S3-20W in an Austin Taxicab.
B.P. Technical Bulletin - 1972

375. Origins of reciprocating engine noise.
D. Anderton et al - ASME 70-WA/DGP-3.

376. Some studies into origins of automotive diesel engine noise and its control.
T. Priede - FISITA Congress - 1966

377. Identification of mechanical sources of noise in a diesel engine: sound emitted from the valve mechanism.
B.J. Fielding & J. Skorecki - Proc. I.Mech.E. Vol. 181 Part I No. 19 - 1966-67

378. Identification of mechanical sources of noise in a diesel engine: sound originating from piston slap.
B.J. Fielding & J. Skorecki - Proc. I.Mech.E. Vol. 184 Part I No. 46 - 1969-70

379. Medium speed diesel engine noise.
R. Bertodo & J.H. Worsfold - Proc. I.Mech.E. Vol. 183 Part I No. 6 - 1968-69

380. On piston slap as a source of engine noise.
D. Ross & E.R. Ungar - ASME 65-OGP-10

381. Urban noise legislation.
C. Caccavari - SAE 720902

382. Air swirl on a road vehicle diesel engine.
D. Fitzgeorge & J.L. Allison - Proc. I.Mech.E. (A.D.) No. 4 - 1962-63

383. Particulate sampling.
D.P. 12553 - 1970

384. Single cylinder engine. Investigation into the merits of the D.I. and Ricardo Comet Va Combustion systems in regard to exhaust emissions.
D.P. 12080 - 1969

385. Tests on a structures research car.
D.P. 12162 - 1969

386. Air utilisation in diesel engines.
D.P. 12205 - 1969

387. Slant 4 Comet Mk Vb. Note on light spring diagrams of cylinder and inlet manifold pressures obtained at 4500 rpm.
D.P. 12288 - 1969

388. Exhaust emission investigation on an IDI diesel saloon car.
D.P. 11603 - 1969

389. Exhaust Control of Diesel Engine (EGR & Water Injection)
M. Tashiro, Isuzu Motors - E.P.A. Report Feb. 1974

390. Small diesel engines for the 1970's.
D.P. 11832- 1969

391. Torque back up in current automotive diesel engines.
D.P. 11284 - 1968

392. Motoring compression pressures.
D.P. 7569 - 1963

393. Note on sound insulation carried out by Ricardo on a compact diesel sedan.
D.P. 7599 - 1964

394. 4 cylinder Comet V.
D.P. 7723 - 1964

395. Injector Maintenance.
D.P. 7735 - 1964

396. Summary of incoming reports concerning an automotive IDI diesel engine.
D.P. 7776 - 1964

397. 4 cyl. Comet III diesel engine - Progress Report No. 1.
D.P. 8416 - 1965

398. Report on the calibration tests of a 4 cylinder IDI diesel engine.
D.P. 8465 - 1965

399. Report on the recalibration tests of a 4 cylinder IDI diesel engine with combustion chamber to latest specification.
D.P. 8639 - 1965

400. 4 cyl. Comet Va (diesel engine) - Progress Report No. 2.
D.P. 8722 - 1965

401. Comet V automotive diesel engine.
D.P. 8748 - 1965

402. Diesel car road tests.
D.P. 8770 - 1965

403. Survey of European Diesel engines.
D.P. 8811 - 1965

404. Diesel car road tests.
D.P. 8934 - 1965

405. Note on further induction ram tests on an IDI diesel engine.
D.P. 12083 - 1969

406. 4 cylinder Comet Mk V.
D.P. 7248 - 1963

407. 4 cyl. Comet Vb 2.8 litre (normally aspirated high speed version).
D.P. 7158 - 1963

408. 4 cyl. Comet Va 2.8 litre (normally aspirated high speed version).
D.P. 7159 - 1963

409. 4 cylinder Comet Mk V.
D.P. 7976 - 1964

410. 4 cylinder Comet Mk V.
D.P. 7554 - 1963

411. 4 cyl. $2\frac{1}{2}$ litre diesel engine.
D.P. 7981 - 1964

412. Noise tests of two diesel sedans.
D.P. 8047 - 1964

413. 2 litre Comet V.
D.P. 8220 - 1964

414. California exhaust air pollution test on a Diesel car.
D.P. 8264 - 1964

415. 2 litre Comet V.
D.P. 8298 - 1965

416. Comet Mk V diesel engine.
D.P. 8310 - 1965

417. 2 litre Comet V.
D.P. 8365 - 1965

418. 3 litre Comet V.
D.P. 8386 - 1965

419. Report on calibration tests of the 4 cylinder in line diesel engine after conversion to Ricardo Comet V combustion system
D.P. 8839 - 1965

420. Report on the road testing of a diesel car.
D.P. 8840 - 1965

421. 1 litre Comet V engine (4 cyl) low speed.
D.P. 8570 - 1965

422. 4 cyl. diesel engine.
D.P. 8910 - 1965

423. Notes on cold starting of diesel engines.
D.P. 13905 - 1971

424. Comet V automotive diesel engine.
D.P. 10164 - 1967

425. Application of the flash temperature concept to cam and tappet wear problems.
A. Dyson & H. Naylor - Proc. I.Mech.E. 1960-61 No. 8

426. Measurement of piston ring and cylinder liner wear by using radio-active tracers.
R.F. Pywell and S.T. Walker - Proc. I.Mech.E. (AD) 1960-61 No. 8

427. Fuel injection system calculations.
B.E. Knight - Proc. I.Mech.E. (AD) No. 1 1960-61

428. Calculations of the effect of heat release on the shape of the cylinder pressure diagram and cycle efficiency.
W.T. Lyn - Proc. I.Mech.E. (AD) No. 1 1960-61

429. Air cooled automobile engines.
J. Mackerle - Proc. I.Mech.E. (AD) No. 2 1961-62

430. Relation between fuel injection and heat release in a direct injection engine and the nature of the combustion process.
A.E.W. Austen & W.T. Lyn - Proc. I.Mech.E. (AD) No. 1 1960-61

431. Effect of engine structure on noise of diesel engines.
T. Priede, A.E. Austen & E.C. Grover - Proc. I.Mech.E. Vol. 179 Part 2A No. 4 1964-5

432. Automobiles and Petroleum: Past, present & future.
Prof. J.J. Broeze - Proc. I.Mech.E. (AD) No. 7 1953-54

433. Development and application of automotive fuels - diesel and gasoline.
A.E. Felt & G.C. Wilson (1954)

434. Some notes on the design, development and production of high speed compression ignition engines.
S. Markland & N. Tattersall - Proc. I.Mech.E. 1947-8

435. Symposium on superchargers and supercharging.
Proc. I.Mech.E. No. 6 - 1956-7

436. Performance of vehicles under trans antarctic conditions.
D.L. Pratt - Proc. I.Mech.E. (AD) No. 6 - 1958-59

437. Commercial Vehicle performance and fuel economy.
G.L. Smith - SAE SP 355 (700194)

438. What can the turbocharger do for the engine?
W. Lang - SAE 660473

439. The influence of induction and exhaust system design on power producing characteristics of diesel engines.
H.G. Holler - SAE 700535 (SP 359)

440. The turbocharger - a vital part of the engine intake and exhaust systems.
W.E. Woolenweber - SAE 700534 (SP 359)

441. Recent developments in variable compression ratio engines.
J.C. Basiletti and E.F. Blackburne - SAE 660344 (SP 280)

442. Diesel combustion at high MEP with low compression ratio.
W.P. Mansfield & W.S. May - SAE 660343 (SP 280)

443. Design and development of a very high output multifuel engine.
R.T. Paluska et al - SAE 670520 (SP 290)

444. Daimler-Benz high output engine - a study in compact design.
O. Herschmann - SAE 670519 (SP 290)

445. Comparative analysis of stirling and other combustion systems.
S.R. Davis & N.A. Henein - SAE 730620

446. Light diesels give promise in mail service.
G. Nield U.S. P.O. Dept. - SAE Jnl., July 1966 Vol. 74 No. 7

447. New diesel combustion chamber gives smoother combustion and cleaner exhaust.
W. Henny & R. Herrmann (Hispano-Suiza) SAE Jnl. July 1966 Vol. 74 No. 7

448. High speed diesel rates improvement.
SAE Jnl. Dec. 1960 - J.H. Pitchford

449. European small diesel comes of age in light commercial vehicles.
J.G. Dawson - SAE Jnl. - 1961

450. List of manufacturers in current production with engines having Comet Mk III & Mk V chambers.
D.P. 7271

451. 4 cyl. Comet V engine - Progress Note No. 2
D.P. 7317

452. 4 cylinder Comet Mk V. Report on tests carried out with two different injection-pumps during the period March to June 1963.
D.P. 7290

453. 4 cyl. Comet Vb 2.8 litre normally aspirated high speed version engine No. 2 - Progress Note No. 5. Noise analysis tests.
D.P. 7340

454. Relation between form of cylinder pressure diagram and noise in diesel engines.
T. Priede - Proc. I.Mech.E. (AD) No. 1 1960-61

455. An investigation into factors which affect piston ring wear under starting conditions.
J. Cree & J. Thiey - Proc. I.Mech.E. (AD) No. 8 - 1960-61

456. A comparison of the wear of small gasoline and diesel laboratory engines.
W.C. Pike & P. Newman - Proc. I.Mech.E. (AD) No. 8 1960-61

457. MWM Diesel features a new pre-combustion chamber-excepts from paper by H.L. Hockel - SAE Jnl. Sept. 1957

458. Diesel for vehicles under 5000 lb -
based on discussion and paper by J.S. Bright - F. Perkins (Canada) Ltd.
SAE Jnl. Feb. 1959

459. How to step up fuel economy -
based on paper by L.D. Conta & P. Durbetaki - SAE Jnl. March 1959

460. Total energy situation in the United States.
D.R. Oliver - SAE 730514 (SP 383)

461. Impact of automotive emissions regulations on gasoline demand.
D.H. Clewell and W.J. Koehl - SAE 730575 (SP 383)

462. Current and future trends in United States gasoline supply.
E.J. Cahill - SAE 730516 (SP 383)

463. Fuel consumption trends in today's vehicles.
H.C. MacDonald - SAE 730517 (SP 383)

464. Energy and the automobile - General factors affecting vehicle fuel consumption.
G.J. Huebner Jr. & D.J. Gasser - SAE 730518 (SP 383)

465. Alternative powerplants.
J.J. Brogan - SAE 730519 (SP 383)

466. Synthetic fuels for transportation and national energy needs.
D.P. Gregory & R.B. Rosenberg - SAE 730520(SP 383)

467. Mass transit impact on energy consumption.
R. Husted - SAE 730521(SP 383)

468. Criteria for evaluating vehicle in use inspection/maintenance impact on emissions and energy conservation.
J.C. Elston - SAE 730522 (SP 383)

469. Low voltage ignition will start cold diesel.
L.P. Atwell et al - SAE Jnl. May 1960

470. Diesels gaining: Some problems ahead. E.R. Klinge - SAE Jnl. - May 1960

471. The I.H.C. D-301 Diesel.
W.E. Peterson - SAE Jnl. - Jan. '61

472. Mobile powerplant trends forecast.
H.W. Welsh - SAE Jnl. Aug. 1967

473. Some notes on stratified charge combustion systems.
D.P. 16744 - 1973

474. A status report on the development of the 1973 California diesel emissions standards.
R.C. Bascom & G.C. Hass - SAE 700671

475. Ricardo electronic smoke sensor.
D.P. 16547 - 1973

476. Diesel combustion research. A review of 20 years combustion chamber development.
D.P. 11378 - 1968

477. Fuel consumption of diesel cars.
D.P. 17334 - 1973

478. The development of a variable compression ratio diesel engine which can greatly reduce the diesels emissions of NO_x.
J. Witzky - Unclassified Document - Ex. E.P.A. 1970

479. The light weight diesel engine.
D.P. 17311 - 1973

480. Diesel and gasoline fuel consumption comparisons.
D24923 Ricardo

481. Ethyl Ether best for starting cold diesels.
F. Nelson & C.J. Ulzheimer - SAE Jnl. March 1950 p42

482. Diesel compared with gasoline engine.
F.B. Lautzenhiser - SAE Jnl. June 1950 p73

483. Making diesel engines deliver greater power.
C.R. Maxwell - SAE Jnl. July 1950 p48

484. How engine was developed for Worlds Fastest Diesel Car.
J.C. Miller & C.R. Boll - SAE Jnl. Oct. 1950 p53

485. Diesel economy stems from higher BTU usage.
M.C. Horine - SAE Jnl. Oct. 1950 p92

486. Thermal gains seen as Diesel edge over gasoline engine.
F.G. Shoemaker - SAE Jnl. Nov. 1950 p57

487. Power Booster Fuels for Diesel engines.
E.J. McLaughlin et al - SAE Jnl. June 1952, p42.

488. Diesels can be started at - 65°F.
D.E. Kilty et al - SAE Jnl. Feb. 1953 p37

489. Un Diesel dans le monde du silence.
B. Carat - L'auto-Journal 15 Dec. '73 p26

490. Peugeot 504 diesel.
Quattroruote (Italian Magazine) December '73

491. Ricardo curves D24426/A - 30, 24494 - 1973

492. Nitrogen oxides - diesel villian - gases attack oil and engine parts.
SAE Jnl. Heavy Duty Issue - Sept. 1963 - Article based on material drawn from paper No. 714B

493. 2 Neue Motoren fur Mercedes-Benz.
Mittelklassewagen - MTZ Sept. '73

494. Results obtained on a single cylinder Comet V.
D.P. 6853 - 1962

495. Notes on preliminary road tests using wide cut fuel.
D.P. 6881 - 1962

496. Comet Vb diesel engine - Progress Note No. 5.
D.P. 6905 - 1962

497. Tests to determine firing requirements to avoid misfire at all conditions in an IDI diesel engine.
D.P. 7038 - 1963

498. Comet V - tests with a distributor type pump.
D.P. 7057 - 1963

499. Comet V diesel engine - Progress Note No. 1.
D.P. 7086 - 1963

500. The operation of compression ignition engines on wide boiling range fuels.
Donel R. Olson, Nelson T. Meckel, & R.D. Quillian, Jr.
SAE Trans. Vol. 70, 1962, p551.

501. Some steps toward calculating diesel engine behaviour.
A.E.W. Austen & W.T. Lyn - CAV Ltd. presented to I.Mech.E. Nov. 1960

502. GMR 4-4 Hyprex free piston turbine engine.
A.F. Underwood - Head Mech. Dev'ment. G.M. Corp. SAE Summer Mtg. June 5th '56

503. Hybrid engines.
P.H. Schweitzer & L.J. Grunder - Richfield Oil Corp.
SAE Trans. Vol. 71, 1963, p 541-562.

504. Charge stratification by fuel injection into swirling air.
A.W. Hussman et al (work done under contract to U.S. Army Ordnance) c.1964

505. 1.5 litre Comet V engine (4 cyl) - Progress Report No. 21 - Nov. 1962. Effect of changes in water and lubricating oil temperatures on engine performance and volumetric efficiency.
D.P. 6919 - 29th Nov. 1962

506. 1.5 litre diesel engine.
D.P. 6836 - 6th Dec. 1962

507. 1.5 litre Comet V engine (4 cyl) Progress Report No. 20. Covering work done - Sept.-Dec. 1962.
D.P. 6990 - 16th Jan. 1963

508. The effect of thermal flow in Comet chamber walls.
D.P. 7036 - 12th Feb. 1963

509. Cold starting in the small high speed diesel engine.
D.P. 17771 - 1974

510. Comet V diesel engine - Progress Report No. 4.
D.P. 7937 - 1963

511. Current small 4 cylinder engines for automotive applications.
Ricardo data sheet - 1974

512. Untitled Ricardo report - D.P. 17357 - 1973

513. Comet V diesel engine - Progress Report D.P. 6419 - 1961

514. IDI diesel engine - Progress Report - D.P. 6421 - 1961

515. Comet V diesel engine - Progress Note No. 5 - D.P. 6480 - 1962

516. Comet V diesel engine - Progress Note No. 7 - D.P. 6559 - 1962

517. Comet V diesel engine - Engine No. 2 - Progress Note No. 2 - 1962
D.P. 6509

518. Comet V diesel engine - Progress Note No. 3 - D.P. 6600 - 1962

519. 4 cylinder Comet Vb - weight of component parts - D.P. 6458 - 1962

520. 6 cylinder IDI diesel engine - weight of major components.
Unclassified sheet 1972

521. 180 cu.in gasoline engine - weight of engine parts.
Unclassified document 1973

522. 75 cu.in gasoline engine - weight of component parts - 1968

523. 120 cu.in Comet V diesel engine - weight of component parts.
D.P. 6183 - 1961

524. 80 cu.in gasoline engine - weight of component parts.
D.P. 9952 - 1967

525. 100 cu.in gasoline engine - weight of component parts.
Unclassified document

526. 150 cu.in gasoline engine - weight of component parts.
Unclassified document

527. 6 cylinder D.I. weight of component parts.
D.P. 6645 - 1962

528. 4 cylinder Comet V diesel engine - Progress Note No. 8.
D.P. 6607 - 1962

529. 4 cylinder Comet V diesel engine - Progress Note No. 6.
D.P. 6525 - 1962

530. Work carried out on No. 2 engine (IDI diesel) prior to despatch.
D.P. 6739 - 1962

531. IDI diesel engine no. 2 - Progress Note No. 3.
D.P. 6773 - 1962

532. 4 cylinder Comet V - Progress Note No. 1.
D.P. 6057 - 1961

533. 1.5 litre Comet V. Progress Report No.1.
D.P. 6064 - 1961

534. 1.5 litre Comet V - review of temperature tests on the various piston forms.
D.P. 6122 - 1961

535. Light engine oils for improved subzero operation.
V.G. Raviolo - SAE Trans. AP. 1950 No. 2 p161

536. Matching fuels to diesel combustion systems.
Dr. C.G.A. Rosen - 1962 Horning Lecture

537. Dual fuel combustion of propane in a railroad diesel engine.
J.M. Clark & H.M. Bunch - S.W. Research Institute c.1960

538. Can you afford diesel engines for highway hauling?
R.W. Richardson & E.G. Caputo: Simmonds Precisions Products Inc.

539. Swirl and combustion in divided combustion chamber type diesel engines -
F. Nagao & H. Kakimoto - SAE Trans. Vol 70 - 1962

540. Gas temperatures during compression in motored and fired diesel engines.
K.C. Tsao, P.S. Myers and O.A. Uyehara - SAE Int. Congress - Jan. 1961

541. Advantages of propane as a transit vehicle fuel.
R. Lee - SAE Trans. No. 2 Vol. 6 April 1952

542. I.H. high-speed lightweight diesels.
A. Dewsberry et al - SAE Trans. Vol. 68 - 1960

543. Fumigation kills smoke - improves diesel performance.
M. Alperstein et al - SAE Trans. Vol. 66 1958

544. Subzero winterization of diesel engine power equipment.
P.W. Espenschade et al - presented to SAE Nat. Diesel engine mtg. Chicago Oct. 30th 1951 - Vol. 6 No. 4 Oct. 1952

545. Compression temperatures in diesel engines under starting conditions.
Pennsylvania State University - W.E. Meyer et al

546. Report concerning turbocharged IDI diesel engine - 1961.

547. Report concerning turbocharged IDI diesel engine - 1962.

548. Report concerning turbocharged IDI diesel engine - 1962.

549. Report on temperature measurement tests in the hot plugs for an IDI diesel engine - 1967.

550. Weights of component parts of various engines.
120 cu.in diesel engine (Comet V) - D.P. 6183 - 11th Sept. 1961

551. Effect of valve size and timing on the torque of small Comet engines.
D.P. 17499 & 17544

552. Diesel car road tests.
D.P. 8805 - 4th Oct. 1965

553. 4 cylinder Comet Mk V - Progress Report No. 2 - June-Sept. 1961.
D.P. 6216

554. Constant power diesel engine - Gas & Oil Power - April 1964

555. Fuel requirements of the small high speed diesel engine.
G. Barrett et al - Gas & Oil Power - Feb. 1956

556. Investigation into nozzle blockage in high speed diesel engines.
G. McConnell - Gas & Oil Power - April 1960

557. The Volvo dual powerplant for military vehicles.
S. Kronogard - Turbine & Automatic Trans. Div, AB Volvo,
SAE 660017

558. The challenge of pollution.
P. Myers - Jnl of Automotive Engineering - April 1970

559. Towards quieter diesels.
M. Russell - CAV Ltd. Jnl of Automotive Engineering - Dec. 1970

560. Exhaust emission legislation.
A. Aitken - Ford Motor Co. Ltd. - Jnl. of Automotive Engineering -
July 1971

561. Car Maintenance - a reappraisal by Marcus Jacobson - Jnl. of
Automotive Engineering - July 1971

562. Recent developments in high speed oil engines.
Prof. S. Davies - March 1938

563. Oxides of nitrogen in diesel engine exhaust gas: their formation and
control.
G. McConnell - Proc. I.Mech.E. 1963-64

564. Research on the compression ignition engine and its fuels.
P. Vaile - Abstract of I.Mech.E. paper, read before North Western
Branch in Manchester - 24th April 1948

565. Combustion in diesel engines.
H.R. Ricardo - lecture delivered 21st Feb. 1950 - London

566. Producer gas for road transport.
J. Hurley & A. Fitton - 30th July 1947

567. An experimental investigation into the effects of fuel addition to intake air on the performance of a compression ignition engine.
W. Lyn - paper accepted by Institution Council for publication 12th March 1953

568. The effect of auxiliary fuels on the smoke limited power output of diesel engines.
L. Derry et al - paper received at Institution 14th Jan. 1953

569. Comparative studies of methane and propane as engine fuels.
N. Moore - paper accepted by Council for publication 23rd Dec. 1955

570. Diesel engine lubricants. Their selection and utilization with particular reference to oil alkalinity.
A. Dyson et al - paper received by Institution on 27th July 1956

571. Horizontal diesel engine Comet V.
Progress Report No. 7 - D.P. 6159 - 11th August 1961

572. Comet V 4 cyl. 2.8 l normally aspirated, high speed version.
Progress Note No. 1.
28th August 1961 - D.P. 6170

573. Diesel engine smoke and pollutants. Diesel engineers and users association - J. Spiers & M. Vulliamy - Publication 342 - 18th Feb. 1971

574. CRC Correlation of diesel smokemeter measurements.
F. Hills, T. Wagner, D. Lawrence. SAE 690493- May 23rd 1969

575. Steady-state correlation of diesel smokemeters.
SAE Task Force Report - A. Carey - SAE 690492 - May 1969

576. The measurement of diesel engine smoke.
A. Dodd & Z. Holubecki. - MIRA Report 1965/10.

577. Curves for 4 cyl., IDI diesel engines.
Dec. 1968 - Unclassified document.

578. Combustion tests on an IDI diesel engine - Jan. 1965
Unclassified document.

579. Curves for IDI diesel engine dated 17.3.64.
Effect of heater plug position in Mk VI chamber. Unclassified document.

580. Test report dated 1.4.63.
Cam form effect on performance of an IDI diesel engine @ 4500 rpm.
Unclassified document.

581. Test report dated 20.6.69.
Ram pipe tests on an IDI diesel engine @ 3000 rpm.
Unclassified document.

582. Motoring loss tests on an IDI diesel engine.
c. 1965 - Unclassified document.

583. Test report dated Feb. 1964.
Noise tests on an IDI diesel engine at 4500 rpm. Unclassified document.

584. Tests on an IDI diesel engine Mk VI chamber.
Piston combustion chamber tests at various F.I.E. timings - 27.3.64
Unclassified document.

585. High speed C.I. engine combustion systems - D.P. 327E

586. Performance data, N.A. 4 stroke, blower scavenged 2 stroke with Ricardo combustion systems - D.P. 199A & B.

587. D.I. emissions.
GO.373, 6th March 1948

588. Combustion systems in high speed diesels.
D.P. 380, A, B, C.

589. Relative advantages of aluminium versus cast iron crankcases for high speed diesel engines.
D.P. 651 - 1st April 1949

590. Note on turbocharging of high speed Comet units.
D.P. 771 - 8th Sept. 1949

591. E12 Comet III/IV.
GO.1044

592. Torque reaction tests.
GO.2136

593. Comet III, Camshaft tests.
GO.2470 - 28.3.55

594. Cold starting diesel engines.
D.P. 2711 - 23rd June 1953

595. Comet comparisons of Mk II, III, IV.
D.P. 2779 - 28th Sept. 1953

596. Diesel car.
D.P. 2904 - 4th March 1954

597. Tests on 4 cylinder diesel engine.
D.P. 2925 - 30th March 1954

598. Inlet manifold starting device.
D.P. 3057 - 25.11.54

599. Notes on tests to assess relative performance of Comet III, V, VI and inverted V chambers.
GO.3100 - 11.11.55

600. 21 Comet V Progress Report No. 3.
D.P. 3144 - Nov. 1956

601. Diesel engine.
D.P. 3238 - 29th Sept. 1954

602. High speed high power road transport engines.
D.P. 3267 - 29th Oct. 1954

603. Diesel engine.
D.P. 3324 - 17th Dec. 1954

604. Diesel engine.
D.P. 3359 - 29th Jan. 1955

605. Diesel engined taxi.
D.P. 3372 - 4th Feb. 1955

606. Diesel engine.
D.P. 3394 - 25th Feb. 1955

607. Diesel tractor engine.
D.P. 3395 - 25th Feb. 1955

608. 90 BHP diesel/petrol comparison.
D.P. 3400 - 3.355

609. Diesel car.
D.P. 3405 - 7th March 1955

610. Noise reduction.
D.P. 3413 - 16th March 1955

611. Cold starting tests on $2^1/4$ litre Comet III chamber engine.
D.P. 3427 - 30.3.55

612. Small Comet V engines.
D.P. 3460 - 12.5.55

613. High speed loop scavenge diesel engine.
D.P. 3472 - 23.5.55

614. Comparative weights - diesel/petrol.
D.P. 3474 - 1.6.55

615. Volumetric efficiency of diesel engine.
D.P. 3493 - 25.6.55

616. $2^1/4$ litre Comet V.
D.P. 3550 - 21.9.55

617. Diesel tractor engine.
D.P. 3700 dated 25.1.56

618. Automotive diesel engine.
D.P. 3710 dated 1.2.56

619. Diesel engine.
D.P. 3714 dated 10.2.56

620. Comet V engine.
D.P. 3724

621. Comet V engine 2 l.
D.P. 3730 - 27.2.56

622. Diesels for road transport.
D.P. 4799 - 4.11.58

623. High speed multi-cylinder Comet V engines of up to 90 mm bore.

D.P. 4847 - 12th Dec. 1958

624. Report of work carried out on a $2^1/4$ litre high ratio Comet V engine between April-Nov. 1958. K.A. Atkins - D.P. 4862 - 30th Dec. 1958

625. Tests with hot plug throats of various shapes E12/4.
D.P. 5175 - 27th August 1959

626. The small diesel engine for cars.
D.P. 5284 - 11.11.59

627. IDI diesel engine with Bosch heater plugs.
D.P. 5296 - 23.11.59

628. Small high speed diesel.
D.P. 5609 - 4.8.60

629. PHS progress note no. 1.
D.P. 5640 - 10.8.60

630. High speed diesel engine proposals.
D.P. 5703A - 24.11.60

631. The effect of diagram shape on combustion noise in diesel engines.
D.P. 5742 - 24.10.60

632. Motoring friction.
D.P. 5844 - 4.1.61

633. 1½l Comet V engine - Progress Note No. 12.
D.P. 5948 - 8.3.61

634. Comet V diesel engine.
D.P. 6009 - 20.4.61

635. Automotive diesel, nozzle tests.
D.P. 6019 - 28.4.61

636. 1½l Comet V engine - Progress Note No. 13. D.P. 6026 - 2.5.61

637. 4 cylinder Comet Mk V engine progress note no. 5.
D.P. 6480 - 23rd Feb. 1960

638. The 2 stage rotary engine - a new concept in rotary power.
F. Feller - I.Mech.E. Proc. 1970-71 - Vol. 185 - 13/71

639. Maintenance frequency in certain bus operating undertakings as it affects injection equipment and combustion zone components.
D.P. 3870 - 1956

640. Classification of diesel fuels.
R.P. Linderan, D.K. Lawrence and T.O. Wagner - SAE 680467 - May 1968

641. Avoidance of diesel fuel filter plugging in winter months.
Esso - Petroleum Technical Service No. 73/29 - 16.11.73

642. The cold filter plugging point: A practical operability task for middle distillate fuels. Paramins (Esso) RBM 5SU 73 April 5 - 1973

643. Minimising low temperature sensitivity of diesel vehicle fuel systems. (Esso) Paramins RBM 54SU-X 73. - 19.11.73

644. How to run diesel engines in cold weather.
W. Sloan et al - SAE Jnl. - June 1951

645. Fleets, but not private cars, are likely customers for LPG.
SAE Jnl. Dec. 1951

646. 4000 rpm is practical aim for automotive diesels.
N.M. Reiners & R.C. Schmidt - SAE Jnl. Dec. 1951.

647. Daimler Benz Test results - EPA report - 1973

648. The small high speed diesel engine - a power unit for future passenger cars.
D.P. 17478 - 1974

649. Berliet Pat. Brit. Pat. 1,128,661

650. Berliet Pat. Brit. Pat. 1,213,206

651. Institut Gornogo Dela Pat. 1,270,782

652. Diesel Exhaust Odor - its evaluation and relation to exhaust gas composition.
F.G. Rounds & H.W. Pearsall.
SAE Trans. Volume 65, 1957, Pages 608/627.

653. Smoke and Odour Control for Diesel Powered Trucks and Buses.
R.C. Stahman, G. Kettridge, K.J. Springer.
SAE 680443.

654. Investigation of Diesel Powered Vehicle Odor and Smoke.
Part V, SWRI Project No. 11-2340-005. K.J. Springer.

655. Note on a visit to Messrs. Opel, Russelsheim, by C.A. Beard on November 27th, 1973 - D.P. 17387.

656. Peugeot letter to Ricardo dated 20th December 1973 + attachment.

657. London General Cab. Co. Ltd. letter to Ricardo dated 15th January 1974 + attachment

658. Note on discussion with Herr U. Alen of Verband Fuer das Personenwerkehrsgewerke, Hamburg, on May 31st, 1974 - D.P. 18175

659. Note on visit to Slota Taxis, Paris on 9th May, 1974 - D.P. 18100.

660. CAV letter to Ricardo dated 30th November, 1973.

661. Note on visit to Deutz, Porz, on 28th November 1973 - D.P. 17394

662. Note on visit to Austin Hire & Taxi Service Ltd., Worthing on 19th November 1973 - D.P. 17320.

663. Note on a visit by C.A. Beard to BLMC on 10th January 1974 - D.P. 17510.

664. Note on discussion with B.P. in London on 21st January 1974 - D.P. 17551.

665. A new light aircraft engine - the radial 2-stroke diesel. J.L. Dooley - Ex. EPA data - 1970.

666. Extract from letter sent by W.A. Bareham to Mr. S. Oshika

667. Mass emissions and fuel economy from LDV diesel engines. 1975 FTP - Ex EPA data.

668. Some engine ideas of the Past and Future. C.F. Bachle

669. Manufacturability and costs of proposed low emissions automotive engine systems. National Academy of Sciences report.

670. Ricardo Comet Mk V Emission levels from a 416 in^3 truck engine under turbocharged conditions. D.P. 15176 - 11 May 1972.

671. McCulloch is developing lightweight aircraft diesel - Automotive Engineering - Sept. '73, Vol. 79, No. 9, p53.

672. Discussion of diesel operation at low temperature at Shoreham on 18th January 1974. D.P. 17540 - Jan. '74

673. Some observations on the nature of blue smoke in engine exhaust. W.T. Lyn M.I.M.E. - CAV Ltd. - Unclassified document.

674. Exhaust Particulates - D.P. 16471 - April 1973.

675. Fuel economy and emissions control - EPA report - Nov. '72.

676. A report on automobile fuel economy.
EPA Report - Oct. 1973.

677. The Low Emission Car for 1975 - Enter the Diesel.
K.J. Springer & H.A. Ashby - SAE 739133.

678. Diesel for passenger cars.
F. Bachle - EPA report - Feb. 1974.

679. Nitrogen oxides and variables in pre-combustion chamber type diesel engines - E.W. Landen - SAE 714B - 1963.

680. Feasibility of meeting the 1975-76 exhaust emission standards in actual use.
National Academy of Sciences - June 1973

681. Characterization and control of emissions from heavy duty diesel and gasoline fuelled engines - prepared for EPA by Bartlesville Energy Research Center, Bureau of Mines - Dec. 1972

682. An evaluation of alternative power sources for low emission automobiles.
National Academy of Sciences - April 1973

683. Manufacturability and costs of proposed low emission automotive engine systems - National Academy of Sciences - Jan. 1973

684. Diesel exhaust odor analysis by sensory techniques.
D.A. Kendall, P.L. Levins & G. Leonardos - SAE 740215 - 1974

685. Chemical analysis of diesel exhaust odor species.
P.L. Levins et al - SAE 740216 - 1974

686. Public opinion of diesel odor.
C.J. Hare et al - SAE 740214 - 1974

687. Progress in diesel odor research.
C.W. Savery, R.A. Matula & T. Asmus - SAE 740213 - 1974

688. Letter from K.J. Springer (Southwest Research Inst) to R.C. Stahman (EPA) - Dec. 13, 1973.

689. Notes on Turner 2 stroke IDI engine - taken from Commercial Motor & Engineering - 1953

690. Higher BMEP's in automotive diesels.
D. Broome - reprint from Automotive Design Engineering - March 1966

691. A Designer's Viewpoint.
H. Barnes-Moss - I.Mech.E. paper - Conference Pub. 19 - No. C343/73

692. Survey of diesel engine emissions - 3rd report.
Project Group CEC-CF 12, June 20th, 1973. Unclassified document.

693. Unaided starting of diesel engines.
T.W. Biddulph & W.T. Lyn - Proc. I.Mech.E. 1966-67, Vol. 181, Part 2A

694. Influence of atmospheric pressure and temperature upon the performance of the naturally aspirated four stroke C.I. engine.
C.B. Dicksee - I.Mech.E. - 1959

695. Diesel engine combustion processes with a view to their use in passenger cars.
Prof. Dr. Ing. E. Eisele - The Internal Combustion Engines Conference, Bucharest - 1970, Paper No. 1C.

696. Diesel engines operating in underground mines.
Dr. Ing. G. Reyl - Unclassified document

697. Unclassified document received from EPA - Chapter XVI - Diesel Engine.

698. Letter from K.J. Springer (Southwest Research Inst) to R.C. Stahman (EPA) - Feb. 15, 1974.

699. Durability of advanced emission controls for heavy duty diesel and gasoline fueled engines - prepared for EPA by Dr. R.D. Fleming and T.R. French, Bartlesville Energy Research Center, Bureau of Mines, Sept. 1973.

SECTION 10

APPENDIX 3 - GLOSSARY OF TERMS

Some of the terms mentioned in the text of this report may not be familiar to the reader and the following glossary has been compiled to clarify matters.

CID - engine swept volume in cubic inches.

CVS-CH - 1975 cold/hot start Federal test procedure using CVS (constant volume sampling) equipment. For diesel powered vehicles HC's are measured by means of a heated flame ionisation detector, the gas sample being extracted via a heated line to minimise condensation of the heavier hydrocarbons (mass emissions at the end of the test are determined by integrating the continuous trace obtained from the flame ionisation detector). This is the only difference in the 1975 test procedure between gasoline and diesel powered light duty vehicles.

Comprex - belt driven engine boosting device working on a pressure exchanger principle. Currently being developed by Brown-Boveri, Switzerland.

DI - direct injection (open chamber).

IDI - indirect injection (pre-cup or swirl chamber).

EGR - exhaust gas recirculation.

F.I.E. - fuel injection equipment.

getter box - catalytic device fitted upstream of a reducing catalyst to protect it from oxygen "spikes".

mpg - fuel economy in miles per U.S. gallon.

NA - normally aspirated.

T/C - turbocharged

DP.....)
SN.....) - internal identification for classification of Ricardo reports.

TECHNICAL REPORT DATA
(Please read Instructions on the reverse before completing)

1. REPORT NO. EPA-460/3-74-011	2.	3. RECIPIENT'S ACCESSION NO.
4. TITLE AND SUBTITLE A STUDY OF THE DIESEL AS A LIGHT DUTY POWERPLANT		5. REPORT DATE JULY 1974
		6. PERFORMING ORGANIZATION CODE
7. AUTHOR(S) C.C.J. FRENCH, M.L. MONAGHAN, R.G. FREESE.		8. PERFORMING ORGANIZATION REPORT NO. D.P. 18410
9. PERFORMING ORGANIZATION NAME AND ADDRESS RICARDO & CO. ENGINEERS (1927) LTD., BRIDGE WORKS, SHOREHAM-BY-SEA, SUSSEX. BN4.5FG. ENGLAND.		10. PROGRAM ELEMENT NO.
		11. CONTRACT/GRANT NO. 68-03-0375
12. SPONSORING AGENCY NAME AND ADDRESS Environmental Protection Agency, Office of Air & Water Programs, Office of Mobile Source Air Pollution Control, Emission Control Technology Division, Ann Arbor, Michigan 48105.		13. TYPE OF REPORT AND PERIOD COVERED FINAL REPORT
		14. SPONSORING AGENCY CODE
15. SUPPLEMENTARY NOTES		

16. ABSTRACT This project was carried out to determine whether the diesel engine was a possible power plant for light duty vehicles in America. The light duty vehicle considered was a 4/5 seat compact sedan with good acceleration capabilities and was considered for a primary emissions environment of HC - 0.41 g/mile, CO - 3.4 g/mile, NO_x-1.5 g/mile. A secondary environment of HC-0.41 g/mile, CO-3.4 g/mile, NO_x-0.4 g/mile was also considered.

A literature survey was carried out covering existing light duty diesel work and experience throughout the world. This indicated that the diesel engine was a viable power plant for light duty use.

An engine configuration study was then carried out when 9 diesel engines developing 96kw were designed. The diesel types covered were indirect and direct injection two-cycle and four-cycle engines; rotary and compound versions were also included. Two gasoline engines were also outlined for comparison purposes.

A method of rating the various power plants was devised and this was applied to the 9 diesels and the 2 gasoline engines. It was concluded that although the gasoline engine was slightly superior to the diesel engine for passenger car use many applications with an emphasis on fuel consumption and durability would give an equal or better rating to the diesel.

Only the indirect injection four-cycle diesels were capable of meeting the primary emissions target with current technology but they did not require any catalysts to do this

17. KEY WORDS AND DOCUMENT ANALYSIS

a. DESCRIPTORS	b. IDENTIFIERS/OPEN ENDED TERMS	c. COSATI Field/Group
EXHAUST EMISSIONS DIESEL ENGINES POWERPLANT RATING METHODOLOGY ENGINE DESIGN LITERATURE REVIEW	LIGHT DUTY VEHICLES LIGHT DUTY ENGINES DIESEL/GASOLINE COMPARISON EMISSION CONTROLS FUEL ECONOMY	

18. DISTRIBUTION STATEMENT RELEASE UNLIMITED	19. SECURITY CLASS (This Report) UNCLASSIFIED	21. NO. OF PAGES
	20. SECURITY CLASS (This page) UNCLASSIFIED	22. PRICE

EPA Form 2220-1 (9-73)