United States
Environmental Protection
Agency

Office of Air Quality
Planning and Standards
Research Triangle Park, NC 27711

EPA-452/R-93-015
January 1994

Air

EPA

GUIDANCE ON THE POST-1996 RATE-OF-PROGRESS PLAN AND THE ATTAINMENT DEMONSTRATION

Office of Air Quality
Clean Air
OAQPS
Planning and Standards

Corrected Version as of February 18, 1994

Guidance on the Post-1996 Rate-of-Progress Plan and the Attainment Demonstration

Ozone/Carbon Monoxide Programs Branch

U.S. Environmental Protection Agency
Office of Air Quality Planning and Standards
Research Triangle Park, NC 27711

CONTENTS

Page

LIST OF TABLES v

LIST OF FIGURES vi

ACRONYMS vii

EXECUTIVE SUMMARY 1

1.0 INTRODUCTION 3
- 1.1 Purpose 5

2.0 CALCULATION OF POST-1996 TARGET LEVELS 7
- 2.1 Calculation of Post-1996 Target Level(s) of Emissions 7
- 2.2 Example Calculation of Post-1996 Target Level(s) 13
  - Calculation of 1999 Target Level of Emissions 13
- 2.3 Conditions Permitting Less than a 3 Percent VOC Emission Reduction 16

3.0 ATTAINMENT DEMONSTRATION REQUIREMENTS 17
- 3.1 Modeling Requirements for Attainment Demonstrations 17
- 3.2 Special Air Quality Situations 18
  - Areas Requiring Emission Reductions in Addition to 3 Percent per Year 18
  - Multi-State Nonattainment Areas 18
  - States Included in More than One Modeling Domain 19
  - International Border Areas 19
  - Areas with Differing Required Attainment Dates 19
  - Exceedances Monitored within a Modeling Domain Due Primarily to Emissions in Another Domain 20

4.0 NO_x EMISSION REDUCTIONS 21
- 4.1 Substitution of NO_x Emission Reductions for Post-1996 VOC Emission Reductions 21
- 4.2 Calculation of Post-1996 NO_x and VOC Target Levels of Emissions 21
- 4.3 Creditability of Pre-1996 VOC and NO_x Reductions 29
- 4.4 Example Calculation of Post-1996 VOC and NO_x Target Levels 30
  - Calculation of 1999 Target Levels of Emissions 30

5.0 CONTROL STRATEGIES 35
- 5.1 Mandatory Requirements 35
  - Serious Nonattainment Area Requirements 35
  - Severe Nonattainment Area Requirements 40
  - Extreme Nonattainment Area Requirements 40
- 5.2 Additional Control Measures 41
- 5.3 Emission Projections 42
  - Growth Factors 43

5.4 Relationship Between the Post-1996 Rate-of-Progress Plans and Other Provisions of the Act 47
Multiple Projection System 48
5.5 Economic Incentive Programs 49
5.6 Contingency Measures 49
5.7 Long-Term Control Measures 51
5.8 New Technologies for Extreme Ozone Nonattainment Areas 53

6.0 POST-1996 RATE-OF-PROGRESS PLAN AND ATTAINMENT DEMONSTRATION SUBMITTALS AND DOCUMENTATION 55
6.1 Post-1996 Rate-of-Progress and Attainment Demonstration Requirements 55
1990 Adjusted Base Year Inventory 55
. 56
Target Level(s) of Emissions 56
Control Measure and Growth Factor Information 56
Milestone Year Projected Inventories 57
6.2 Multi-State Submittal Information 57
6.3 Mid-Course Corrections 57
6.4 Suggested Submittal Tables 58

REFERENCES 63

APPENDIX A: DEFINITIONS OF TERMS A-1

APPENDIX B: GENERAL IMPLICATIONS OF MILESTONE AND ATTAINMENT FAILURES B-1

APPENDIX C: CHECKLISTS C-1

APPENDIX D: COMPILATION OF GUIDANCE MEMORANDA ON THE 15 PERCENT RATE-OF-PROGRESS REQUIREMENT D-1

LIST OF TABLES

Number | Page

1. SERIOUS AND ABOVE OZONE NONATTAINMENT AREA POST-1996 MILESTONE AND ATTAINMENT DATES 7
2. SIP SUBMITTAL REQUIREMENTS FOR MODERATE AND ABOVE OZONE NONATTAINMENT AREAS 36
3. BEA PROJECTION CATEGORIES FOR METROPOLITAN STATISTICAL AREAS (MSA'S) AND STATES 45
5. SUGGESTED FORMAT FOR POST-1996 RATE-OF-PROGRESS CONTROL STRATEGY SUMMARY SUBMITTAL 59
6. SUGGESTED FORMAT FOR ATTAINMENT CONTROL STRATEGY SUMMARY SUBMITTAL 60
7. SUGGESTED FORMAT FOR CONTINGENCY MEASURE SUBMITTAL 61
8. SUGGESTED FORMAT FOR SUBMITTAL OF RULE EFFECTIVENESS (RE) IMPROVEMENT MEASURES 62
9. SUGGESTED FORMAT FOR SUBMITTAL OF STATIONARY SOURCE CONTROL MEASURES FOR THE POST-1996 RATE-OF-PROGRESS PLAN 62
10. SUGGESTED FORMAT FOR SUBMITTAL OF STATIONARY SOURCE CONTROL MEASURES FOR THE ATTAINMENT DEMONSTRATION 62

LIST OF FIGURES

Number Page

Figure 1. Flowchart for generic post-1996 rate-of-progress VOC target level calculation 8
Figure 2. Flowchart of hypothetical example 1999 rate-of-progress VOC target level calculation 14
Figure 3. Flowchart for generic post-1996 rate-of-progress VOC calculations (with NO_x substitution) 22
Figure 4. Flowchart for rate-of-progress NO_x calculation for 1999 23
Figure 4a. Flowchart for generic post-1999 rate-of-progress NO_x calculations 24
Figure 5. Flowchart for hypothetical example 1999 rate-of-progress VOC calculations (with NO_x substitution) 31
Figure 6. Flowchart for hypothetical example 1999 rate-of-progress NO_x calculations 32

ACRONYMS

Act	Clean Air Act
ACT	Alternative Control Technology
AEERL	Air and Energy Engineering Research Laboratory
AFS	AIRS Facility Subsystem
AIRS	Aerometric Information Retrieval System
AMS	AIRS Area and Mobile Source Subsystem
ASC	Area Source Category code
BEA	Bureau of Economic Analysis
CFR	Code of Federal Regulations
CO	carbon monoxide
CTG	Control Techniques Guideline
E-GAS	Economic Growth Analysis System
EIP	Economic Incentive Program
EPA	U.S. Environmental Protection Agency
EPS	Emissions Preprocessor System
FIP	Federal Implementation Plan
FIPS	Federal Information Processing Standards
FMVCP	Federal Motor Vehicle Control Program
FR	Federal Register
I/M	Inspection and Maintenance
lb	pound(s)
LEV	Low-Emitting Vehicle
MPO	Metropolitan Planning Organization
MPS	Multiple Projection System
MSA	Metropolitan Statistical Area
NAAQS	National Ambient Air Quality Standard(s)
NESHAP	National Emission Standard for Hazardous Air Pollutants
NO_2	nitrogen dioxide
NO_x	nitrogen oxides
NSPS	New Source Performance Standards
NSR	New Source Review
OAQPS	Office of Air Quality Planning and Standards
ppb	parts per billion
ppm	parts per million
psi	pounds per square inch
RACT	Reasonably Available Control Technology
RE	rule effectiveness
REMI	Regional Economic Models, Inc.
ROM	regional oxidant modeling
RVP	Reid vapor pressure
SAS	Statistical Analysis System
SCC	Source Classification Code
SIC	Standard Industrial Classification
SIP	State implementation plan
STAPPA/ALAPCO	State and Territorial Air Pollution Program Administrators and Association of Local Air Pollution Control Officials

TCM	transportation control measures
TIP	Transportation Improvement Program
tpy	tons per year
TSD	Technical Support Document(ation)
UAM	Urban Airshed Model
VMT	vehicle miles traveled
VOC	volatile organic compound(s)

EXECUTIVE SUMMARY

Section 182(c)(2) of the Clean Air Act (Act) requires each serious and above ozone nonattainment area to submit a State implementation plan (SIP) revision by November 15, 1994, which describes, in part, how the area will achieve an actual volatile organic compound (VOC) emission reduction of at least 3 percent per year averaged over each consecutive 3-year period beginning 6 years after enactment (i.e., November 15, 1996) until the area's attainment date. The attainment dates prescribed by section 181(a) of the Act are as follows:

- November 15, 1999 for serious ozone nonattainment areas.
- November 15, 2005 for severe ozone nonattainment areas.
- November 15, 2007 for severe ozone nonattainment areas with a 1986-1988 ozone design value of 0.190 parts per million (ppm) up to, but not including, 0.280 ppm.
- November 15, 2010 for extreme ozone nonattainment areas.

This SIP revision must also describe how any growth in emissions over each applicable post-1996 period will be offset. The portion of the SIP revision that illustrates the plan for the achievement of these emission reductions is subsequently defined in this document as the "post-1996 rate-of-progress plan."

The Act permits less than a 3 percent per year VOC emission reduction averaged over each consecutive 3-year period for serious and severe ozone nonattainment areas if the State demonstrates that the plan includes all measures that, given technological achievability, can feasibly be implemented in the given area. Additionally, the State must demonstrate that its plan includes measures that are achieved in practice by sources in the same source category in nonattainment areas of the next higher classification [section 182(c)(2)(B)(ii) of the Act]. The 3 percent requirement cannot be waived in areas classified as extreme. The Act also provides for crediting of VOC emission reductions achieved in the 1990-1996 period to the post-1996 rate-of-progress plan, if they are in excess of the 15 percent VOC reductions (net of growth) required between 1990 and 1996 [section 182(c)(2)(B)(ii)], and substitution of nitrogen oxides (NO_x) emission reductions (net of growth) occurring in the post-1990 period for the post-1996 VOC emission reduction requirements [section 182(c)(2)(C) of the Act].

In addition to the 3 percent VOC emission reduction requirement, section 182(c)(2) also requires the SIP for serious and above ozone nonattainment areas to provide "a demonstration that the plan, as revised, will provide for attainment of the ozone national ambient air quality standard (NAAQS) by the applicable date." Furthermore, section 182(c)(2) requires that the demonstration be based on photochemical grid modeling or an equivalent analytical method as determined by the U.S. Environmental Protection Agency (EPA). All serious and above ozone nonattainment areas and all multi-State moderate ozone nonattainment areas are required to submit their attainment demonstrations, based on the use of a photochemical grid model such as the Urban Airshed Model (UAM), to EPA by November 15, 1994. It is important to note that the underlying requirement of the SIP is that nonattainment areas achieve attainment of the ozone NAAQS by their attainment date. That is, additional reductions beyond the required 3 percent per year VOC emission reductions may be needed for the nonattainment area to attain the NAAQS by its applicable date.

This document focuses on the calculation of post-1996 target levels, the required submittals and submittal schedules for each element of the post-1996 rate-of-progress plan and attainment demonstration, and the development of control strategies to achieve the required emission reductions. This document also provides States with information on acceptable data sources and procedures for projecting emissions.

Significant overlap occurs between concepts relating to the 15 percent rate-of-progress plan and concepts relating to the post-1996 plan. Where such overlap occurs, the applicable guidance documents developed for the 15 percent rate-of-progress plan are referenced. One significant difference between the two plans is that unlike the 15 percent plan, NO_x emission reductions can be substituted for the required VOC emission reductions in the post-1996 plan. Guidance is provided on how States can calculate the amount of NO_x emission reductions that can be substituted for VOC emission reductions.

This document also describes the EPA requirements for an attainment demonstration based on photochemical grid modeling and discusses the role of NO_x reductions in attainment demonstrations. Additionally, this document discusses the general implications of milestone and attainment failures for serious and above ozone nonattainment areas. Specific requirements for milestone compliance demonstrations and consequences of failure to meet a milestone will be addressed in future rulemaking. This document also provides a sample checklist to aid States in a step-by-step review of their rate-of-progress plans to ensure that they contain all of the necessary components required for approval by EPA. Finally, this document provides blank forms that States are encouraged to use to document and submit their post-1996 rate-of-progress plans.

1.0 INTRODUCTION

Section 182(c)(2) of the Act requires each serious and above ozone nonattainment area to submit a SIP revision by November 15, 1994, which provides for an actual VOC emission reduction of at least 3 percent per year averaged over each consecutive 3-year period beginning 6 years after enactment of the Act (i.e., up to November 15, 1996) until the area attains the ozone standard. The attainment dates prescribed by section 181(a) of the Act are as follows:

- November 15, 1999 for serious ozone nonattainment areas.
- November 15, 2005 for severe ozone nonattainment areas.
- November 15, 2007 for severe ozone nonattainment areas with a 1986-1988 ozone design values of 0.190 ppm up to, but not including, 0.280 ppm.
- November 15, 2010 for extreme ozone nonattainment areas.

If an area's attainment demonstration shows that the area will attain before the statutory attainment date, the post-1996 rate-of-progress plan is only required to extend to the demonstrated attainment date.

The portion of the SIP revision that illustrates the plan for the achievement of the post-1996 emission reductions is subsequently defined in this document as the "post-1996 rate-of-progress plan." The SIP must also describe how any growth in emissions over each applicable period will be offset.

The Act also mandates a 15 percent VOC emission reduction, net of growth, between 1990 and 1996. The SIP revision describing how this requirement will be met was due by November 15, 1993. The plan for these 1990-1996 reductions is termed the "15 percent rate-of-progress plan." The EPA has published guidance documents describing the procedures to follow in developing the 15 percent rate-of-progress plans. Because many of the issues discussed in these documents are also associated with concerns relating to the development of the post-1996 rate-of-progress plan, States should review the following documents pertaining to the 15 percent rate-of-progress plans:

- Guidance on the Adjusted Base Year Emissions Inventory and the 1996 Target for the 15 Percent Rate-of-Progress Plans, EPA-452/R-92-005, U.S. Environmental Protection Agency, Office of Air Quality Planning and Standards, Research Triangle Park, NC. October 1992.
- Guidance on the Relationship Between the 15 Percent Rate-of-Progress Plans and Other Provisions of the Clean Air Act, EPA-452/R-93-007, U.S. Environmental Protection Agency, Office of Air Quality Planning and Standards, Research Triangle Park, NC. May 1993.
- Guidance for Growth Factors, Projections, and Control Strategies for the 15 Percent Rate-of-Progress Plans, EPA-452/R-93-002, U.S. Environmental Protection Agency, Office of Air Quality Planning and Standards, Research Triangle Park, NC. March 1993.

- Guidance on Preparing Enforceable Regulations and Compliance Programs for the 15 Percent Rate-of-Progress Plans, EPA-452/R-93-005, U.S. Environmental Protection Agency, Office of Air Quality Planning and Standards, Research Triangle Park, NC. June 1993.

The SIP for serious and above ozone nonattainment areas due by November 15, 1994 must also include "a demonstration that the plan, as revised, will provide for attainment of the ozone NAAQS by the applicable date" [section 182(c)(2)(A)]. This demonstration must be based on photochemical grid modeling, such as UAM, or an equivalent analytical method as determined by EPA. This requirement also applies to all multi-State moderate ozone nonattainment areas. Additionally, those intrastate moderate nonattainment areas that opt to use photochemical grid modeling for their attainment demonstrations must also submit their demonstrations by November 15, 1994. It is important to note that the underlying requirement of the SIP is that nonattainment areas attain the NAAQS by their attainment date. That is, achievement of the 3 percent per year VOC emission reduction requirement may not provide all of an area's mandated emission reductions.

Section 182(c)(2)(B)(ii) permits less than a 3 percent per year VOC emission reduction averaged over each consecutive 3-year period for serious and severe ozone nonattainment areas if the State demonstrates that the plan includes all measures that, given technological achievability, can feasibly be implemented in the given area. Additionally, the State must demonstrate that its plan includes measures that are achieved in practice by sources in the same source category in nonattainment areas of the next higher classification. The 3 percent requirement cannot be waived in areas classified as extreme. The Act also provides for crediting of VOC emission reductions achieved in the 1990-1996 period to the post-1996 rate-of-progress plan, if they are in excess of the 15 percent VOC reductions (net of growth) required between 1990 and 1996 [section 182(c)(2)(B)(ii)], and substitution of NO_x emission reductions (net of growth) occurring in the post-1990 period for the post-1996 VOC emission reduction requirements [section 182(c)(2)(C)].

Demonstrating achievement of the 15 percent VOC emission reductions by November 15, 1996, and then subsequently demonstrating achievement of the 3 percent per year VOC emission reductions averaged over each consecutive 3-year period from November 15, 1996 until the attainment date, are termed milestone demonstrations. Achievement of the milestones must be demonstrated within 90 days of the milestone date (e.g., the 9 percent reduction required by November 15, 1999 must be demonstrated by February 13, 2000). Moderate areas are not required to submit such a demonstration. Serious and above nonattainment areas will not be required to demonstrate achievement of the milestone if the milestone date and attainment date are the same, and the standard has been attained. The EPA will instead determine whether the nonattainment area has attained the ozone NAAQS based on the nonattainment area's air quality data for the previous 3 years. However, to comply with the rate-of-progress requirements, nonattainment areas are required to develop a plan for milestone emission reductions (i.e., a post-1996 rate-of-progress plan) up through their attainment date.

The EPA expects to promulgate in late 1994 a milestone compliance demonstration rule that will address this requirement. The rule will also address summary data needs, detailed reporting requirements, and the consequences of submitting an inadequate demonstration (in terms of documentation) as well as consequences of failure to demonstrate the 15 percent and 3 percent per year emission reduction requirements.

1.1 Purpose

This document provides guidance on the procedures that States should follow in calculating target levels of emissions, projecting emission inventories and creditable emission reductions, and developing and presenting control measures which serious and above ozone nonattainment areas must include in their post-1996 rate-of-progress plans. Fully-adopted post-1996 rate-of-progress plans are due to EPA by November 15, 1994.

The post-1996 rate-of-progress plan must account for the effects of emissions growth projected to occur in a nonattainment area. This document provides information and references on acceptable data sources and procedures for projecting emissions using growth factors.

Attainment demonstration requirements are described for those nonattainment areas that are required or choose to use photochemical grid modeling. This section also discusses special air quality situations involving attainment demonstrations.

Unlike the 15 percent rate-of-progress plan, NO_x reductions, net of growth, can be substituted for the required post-1996 VOC reductions. This document explains how to calculate the amount of NO_x reductions available to an ozone nonattainment area to meet the post-1996 rate-of-progress requirements and the role of NO_x reductions in attainment demonstrations based on photochemical grid modeling .

A key component of the post-1996 rate-of-progress plan is the control measures that the States adopt and implement to reduce VOC and or NO_x emissions to meet the 3 percent per year reduction requirements. States are referenced to further documentation of stationary and mobile source control measures and economic incentive programs (EIP's) if they wish to employ a particular control measure toward the post-1996 rate-of-progress plan and/or attainment demonstration. The regulatory concepts of long-term measures (for serious and above nonattainment areas) and new technologies (for extreme nonattainment areas) are discussed as ways for States to obtain additional time to plan for and adopt certain control measures that require complex analyses or other time consuming activities. The purpose of this discussion is to guide States as to how EPA intends to administer these two concepts in the context of the rate-of-progress plan requirements.

The Act requires that States with ozone nonattainment areas include contingency measures in their SIP's [sections 172(c)(9) and 182(c)(9)]. The contingency measures are the additional controls to be implemented in the event of a milestone or attainment failure. This document discusses contingency measures to provide States with guidance on how to comply with the contingency measure requirements for serious and above ozone nonattainment areas.

A final purpose of this document is to provide the States with a suggested format for their post-1996 rate-of-progress control strategy submittals and describe the documentation requirements for attainment demonstrations based on photochemical grid modeling.

2.0 CALCULATION OF POST-1996 TARGET LEVELS

To determine their control strategies for achieving the post-1996 VOC emission reductions, States will need to calculate the target level of emissions for each milestone and attainment year. This section explains the procedures for calculating the target level of emissions for each milestone and attainment date to which serious and above ozone nonattainment areas are subject.

Emissions and emission reductions for the post-1996 plan are calculated on a typical weekday basis for the "peak" 3-month ozone period (generally June through August). States will need to document how they calculated the targets for each of their applicable milestone and attainment dates. The documentation will need to show the 3 percent per year emission reduction levels averaged over each period between consecutive milestone dates and the target level of emissions for each milestone.

Table 1 presents the post-1996 milestone and attainment dates for serious and above ozone nonattainment areas.

TABLE 1. SERIOUS AND ABOVE OZONE NONATTAINMENT AREA POST-1996 MILESTONE AND ATTAINMENT DATES

	Milestone Date(s)	Primary NAAQS Attainment Date
Serious	Nov.15, 1999	Nov.15, 1999
Severe[1]	Nov.15, 1999, 2002, & 2005	Nov.15, 2005
Severe[2]	Nov.15, 1999, 2002, 2005, & 2007	Nov.15, 2007
Extreme	Nov.15, 1999, 2002, 2005, 2008, & 2010	Nov.15, 2010

[1] With an ozone design value of less than 0.190 ppm.
[2] With a 1986-1988 ozone design value of 0.190 ppm up to, but not including, 0.280 ppm.

If an area's attainment demonstration shows that the area will attain before the statutory attainment date, the post-1996 rate-of-progress plan is only required to extend to the demonstrated attainment date.

2.1 Calculation of Post-1996 Target Level(s) of Emissions

The target level(s) of emissions represents the maximum amount of emissions that a nonattainment area can emit for a given target year while complying with the post-1996 rate-of-progress plan requirements. Figure 1 outlines the general approach to calculating the target level of

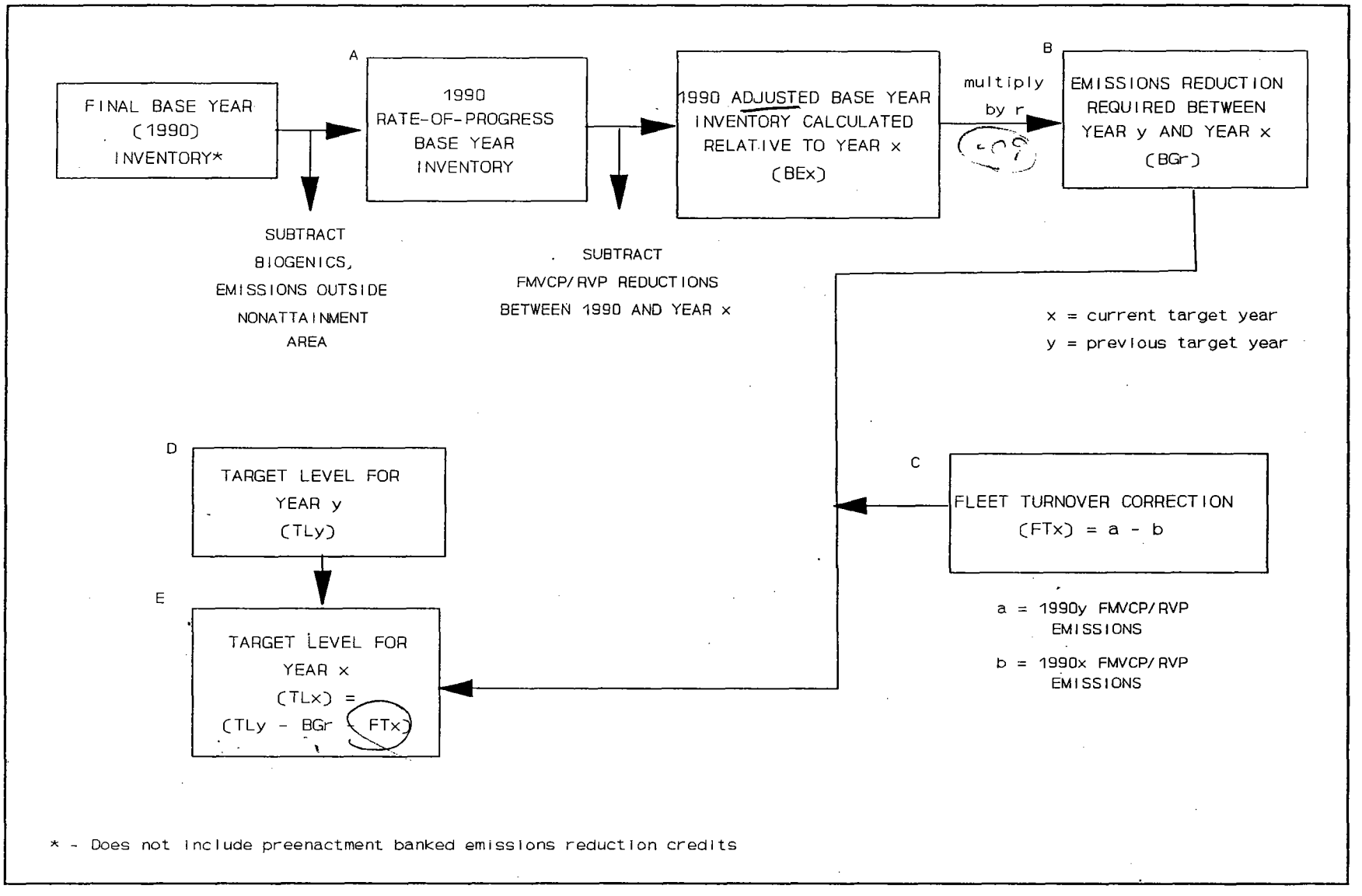

Figure 1. Flowchart for generic post-1996 rate-of-progress VOC target level calculation

VOC emissions. Two equations are presented in the General Preamble to describe the calculation of the post-1996 target levels. These equations can be generalized into the following single equation:

Target level = (previous milestone's target level) - (reductions required to meet the rate-of-progress requirement) - (fleet turnover correction term).

or

$$TL_x = TL_y - BG_r - FT_x$$

where:

x	=	Current milestone or attainment year
y	=	Year of previous milestone
TL_x	=	Target level of emissions for year x (in pounds (lb)/day)
TL_y	=	Target level of emissions for year y (in lb/day)
BG_r	=	Emission reduction requirement for year x (in lb/day)
FT_x	=	Fleet turnover correction term for year x (in lb/day).

This equation can be used to calculate the target level of emissions for each post-1996 milestone year. The target level for each milestone year (TL_x) is calculated by subtracting the 3 percent per year rate-of-progress emission reduction (BG_r) and the fleet turnover correction term (FT_x) from the previous milestone year (TL_y). The specific steps needed to calculate the target are discussed below.

There are six major steps in calculating a post-1996 target level of emissions. The first four steps are needed to calculate the 3 percent per year rate-of-progress emission reductions. Steps 1 and 2, developing the 1990 base year inventory and the 1990 rate-of-progress inventory, were required to have been submitted by States in the 15 percent rate-of-progress plan. The EPA document entitled Guidance on the Adjusted Base Year Emissions Inventory and the 1996 Target for the 15 Percent Rate-of-Progress Plans (see reference 1), describes these two inventories in more detail.

Step 1: Develop the 1990 base year inventory

The total 1990 base year emissions from the four emission source types (point, area, mobile, and biogenic) are compiled. It should be noted that the base year inventory used for the post-1996 rate-of-progress plan must be consistent with the base year inventory used for attainment demonstration purposes. Any changes that were made to the inventory between submittal of the 15 percent rate-of-progress plan and the post-1996 rate-of progress plan should be reflected.

Step 2: Develop the 1990 rate-of-progress base year inventory

Biogenic source emissions and other emissions from sources located outside the nonattainment area, but included in step 1, are removed from the 1990 base year inventory.

Step 3: Calculate the 1990 adjusted base year inventory

The Act specifies the emissions "baseline" from which each emission reduction milestone is calculated. Section 182(c)(2)(B) states that the reductions must be achieved "from the baseline emissions described in subsection (b)(1)(B)." This baseline value is termed the 1990 adjusted base year inventory. Section 182(b)(1)(B) defines baseline emissions (for purposes of calculating each milestone VOC/NO_x emission reduction) as "the total amount of actual VOC or NO_x emissions from all anthropogenic sources in the area during the calendar year of enactment." This section excludes from the baseline the emissions that would be eliminated by Federal motor vehicle control program (FMVCP) regulations promulgated by January 1, 1990, and Reid vapor pressure (RVP) regulations promulgated by the time of enactment (55 FR 23666, June 11, 1990), which require maximum RVP limits for gasoline to be sold in nonattainment areas during the peak ozone season.

The 1990 adjusted base year inventory must be recalculated relative to each milestone and attainment date because the emission reductions associated with the FMVCP increase each year due to fleet turnover. Thus, a severe ozone nonattainment area with an ozone design value of less than 0.190 ppm would need to calculate the 1990 adjusted base year inventory relative to 1999, 2002, and 2005. The only adjustment that must be made to the inventory in each case is to recalculate mobile source emissions, including emissions from vehicle refueling, using MOBILE5a. This adjustment is made by calculating a separate mobile source emission factor for each applicable milestone year. The emission factors are then multiplied by 1990 vehicle miles traveled (VMT), or gallons of gasoline for refueling emissions, to yield the mobile source emissions that must be subtracted from the 1990 rate-of-progress base year inventory to calculate the 1990 adjusted base year inventory for each milestone/attainment date. These reductions are calculated as follows:

FMVCP/RVP Reductions Between 1990 and Current Target Year (x)

Subtract

Adjusted 1990 mobile source emissions = (1990 VMT)(MOBILE5a emission factors from B)

from

Actual 1990 mobile source emissions = (1990 VMT)(MOBILE5a emission factors from A)

A) MOBILE5a run from the 1990 base year inventory. Emission factors from this run will be used with actual 1990 VMT to calculate actual 1990 emissions. If the refueling emission factor is calculated in MOBILE5a as a grams per gallon of gasoline factor, that factor should be multiplied by actual 1990 gasoline throughput and those emissions should be included in the 1990 actual mobile source emissions.

B) MOBILE5a run as in the 1990 base year inventory, except that year "x" will be used as the evaluation year (this will change the vehicle mix to account for fleet turnover). Emission factors from this run will be used with actual 1990 VMT to calculate adjusted 1990 emissions relative to year "x." If the refueling emission factor is calculated in MOBILE5a as a grams per gallon of gasoline factor, that factor should be multiplied by actual 1990 gasoline throughput and those emissions should be included in the 1990 adjusted mobile source emissions.

A detailed description of the procedure for calculating the 1990 adjusted base year inventory is provided in an EPA document entitled Guidance on the Adjusted Base Year Emissions Inventory and the 1996 Target for the 15 Percent Rate-of-Progress Plans. (See reference 1.) The adjusted base year inventory can be calculated the same way for each post-1996 milestone/attainment year. After this inventory has been calculated for each applicable milestone and attainment year, the next step is to determine the required creditable emission reductions.

Step 4: Calculate 3 percent per year reductions

In general, to compute the required emission reductions, the number of years between successive milestone dates (or in some cases between a milestone date and the attainment date) should be multiplied by 0.03. If an area plans to substitute NO_x for VOC, however, the percent reduction will have to be adjusted. This is discussed in more detail in section 4 of this document.

$$\text{Percentage reduction} = r = [0.03 * (x-y)]$$

where:

(x-y) = Number of years between current (x) and previous (y) target dates.

For example, an extreme area would multiply 0.03 by 2 to calculate that it will need a 6 percent emission reduction between 2008 and 2010. Next, this percentage figure is multiplied by the adjusted base year inventory calculated relative to the current milestone/attainment date to yield the required emission reduction.

$$BG_r = BE_x * r$$

where:

BG_r = Emission reduction requirement for milestone or attainment date (in lb/day)
BE_x = 1990 adjusted base year inventory calculated relative to year x
r = Percent reduction needed to meet the rate-of-progress requirement.

The fifth step is to calculate the fleet turnover correction term.

Step 5: Calculate fleet turnover correction term

In the absence of any new requirements of the Act, there would still be some decrease in motor vehicle emission factors for many years as a result of fleet turnover, the gradual replacement of older pre-control vehicles with newer vehicles with controls. The Act does not allow States to take credit for these reductions for rate-of-progress purposes. During the calculation of the 1996 milestone target, these "FMVCP reductions" (along with non-creditable RVP reductions) that would occur between 1990 and 1996 were subtracted from the 1990 rate-of-progress base year inventory to calculate the 1990 adjusted base year inventory. This 1990 adjusted base year inventory was then used to calculate the required reductions and the 1996 target.

Because nonattainment areas are required to meet their 1996 targets, the calculation of the 1999 target must be based, in part, on the 1996 target. Likewise, the calculation of each subsequent target will depend, in part, on the level of the previous target. In the previous step (step 4), the adjusted base year inventory was multiplied by the total percent required reduction in order to determine the reductions required in the target year. This emission reduction requirement must then be subtracted from the emission target in the previous milestone year to calculate the new milestone target. However, one additional correction term, the fleet turnover correction, is needed to properly calculate the target.

The fleet turnover correction is needed to account for the mobile source emission reductions that would have occurred under the preenactment FMVCP and RVP requirements (under 55 FR 23666), between consecutive milestone years. For example, assume that a nonattainment area has met the milestone target for 1996. The further creditable reduction required to meet the post-1996 rate-of-progress requirements was calculated in step 4. However, between 1996 and 1999, there will be some additional reductions in emissions due to fleet turnover of older vehicles that are not creditable. These reductions must also be subtracted from the 1996 target to determine the 1999 target. These additional, non-creditable, reductions are referred to here as the fleet turnover correction term.

The calculation of the fleet turnover correction term is simple and does not require any additional MOBILE runs beyond what has been required in previous steps of this calculation. For the general case, the fleet turnover correction term is calculated as follows:

$$\text{Fleet Turnover Correction } (FT_x) = 1990_y\text{FMVCP/RVP} - 1990_x\text{FMVCP/RVP}$$

where:

x = current target year
y = previous target year

1990_yFMVCP/RVP = Adjusted 1990 mobile source emissions for the previous target year
1990_xFMVCP/RVP = Adjusted 1990 mobile source emissions for the current target year.

The adjusted 1990 mobile source emissions for the current target year were calculated earlier in step 3 as 1990 VMT times MOBILE5a emission factors for the current target year with all new Clean Air Act measures disabled and RVP set to the Phase 2 limit required in Summer 1992. The adjusted 1990 mobile source emissions for the previous target year were calculated in the same way as part of the target level calculation for the previous year. For example, the fleet turnover correction for the 1999 target is equal to the adjusted mobile source emissions calculated for the 1996 rate-of-progress requirement minus the adjusted mobile source emissions calculated in step 3 of the current calculation.

Step 6: Calculate post-1996 target level of emissions

To calculate each target level of emissions, the required emission reductions calculated in step 4 and the fleet turnover correction term from step 5 are subtracted from the previous milestone's target level. For the purposes of calculating the 1999 target, it may be necessary to recalculate the

1996 target if the base year inventory was significantly revised after submittal of the 15 percent rate-of-progress plan.

Target level = (previous milestone's target level) - (reductions required to meet the rate-of-progress requirement, calculated in step 4) - (fleet turnover correction term, calculated in step 5).

This target represents the level of emissions that must be achieved in order for a nonattainment area to demonstrate that the rate-of-progress requirement will be met.

2.2 Example Calculation of Post-1996 Target Level(s)

This section presents a hypothetical example that calculates a target level for 1999. This example builds on the example contained in the EPA document entitled Guidance on the Adjusted Base Year Emissions Inventory and the 1996 Target for the 15 Percent Rate-of-Progress Plans (see reference 1), and assumes that no changes have been made to the base year emission inventory. Figure 2 outlines the procedure to follow to calculate the target.

Calculation of 1999 Target Level of Emissions

Step 1: Develop 1990 base year VOC emission inventory (lb/day)

Point Sources		1,000
Area Sources		2,500
Mobile Sources		3,500
Biogenic Sources		+ 5,000
	Total	12,000

Step 2: Develop 1990 rate-of-progress base year inventory (lb/day)

	1990 base year inventory =	12,000
Point Sources (outside nonattainment area)		-200
Area Sources (outside nonattainment area)		-500
Mobile Sources (outside nonattainment area)		-500
Biogenic Sources		-5,000
	Total	5,800

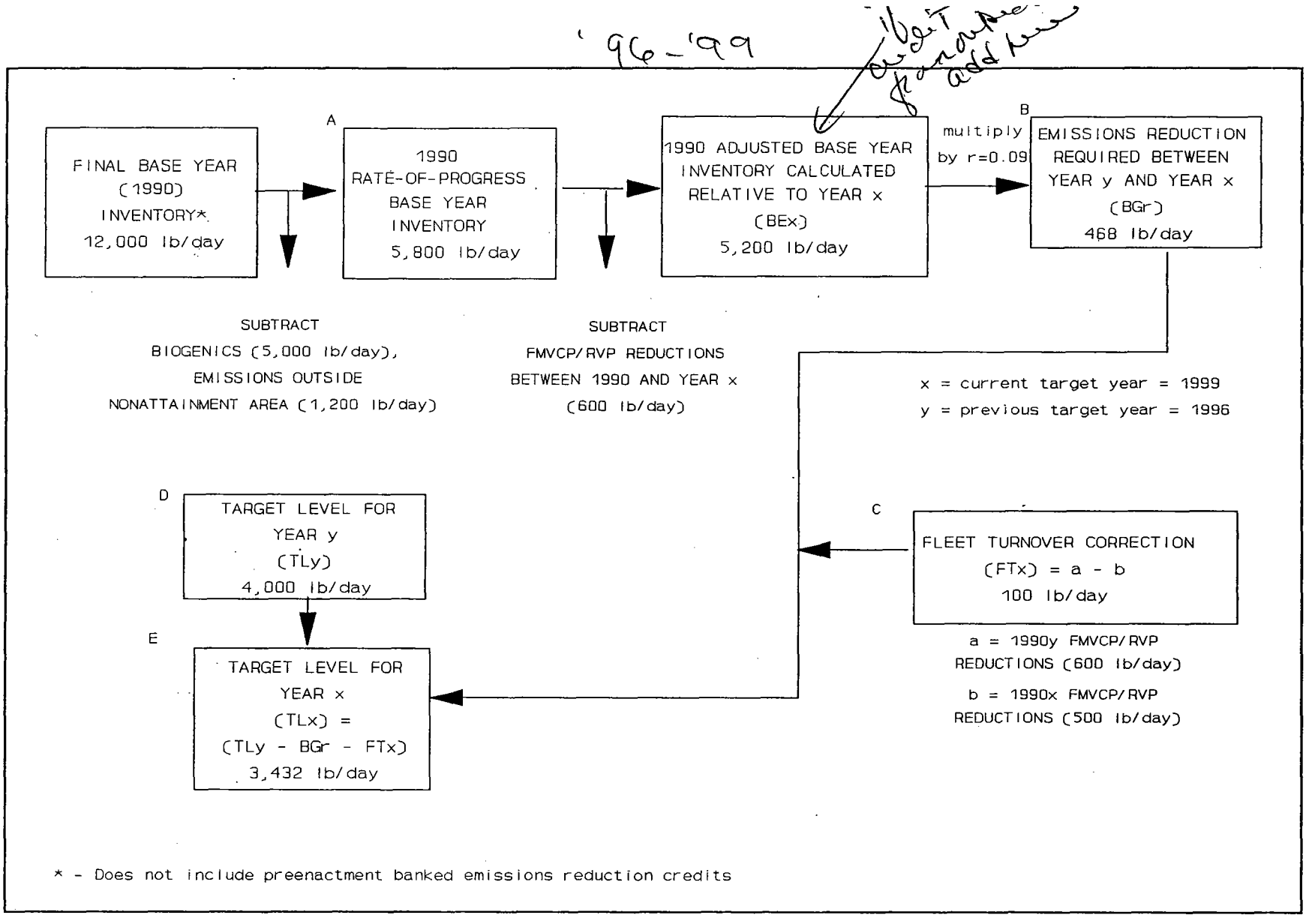

Figure 2. Flowchart of hypothetical example 1999 rate-of-progress VOC target level calculation

Step 3: Calculate the 1990 adjusted base year inventory for 1999

The only adjustment that must be made to the rate-of-progress inventory is to calculate mobile source emission reductions using MOBILE5a. This adjustment is made by calculating a mobile source emission factor for 1999, multiplying the emission factor by 1990 VMT, and subtracting that total from the 1990 actual mobile source emissions to yield the FMVCP and RVP reductions between 1990 and 1999. For this example, the State calculates that there will be a reduction of 600 lb/day of VOC due to fleet turnover up through 1999 and the RVP limit specified for the nonattainment area in 55 FR 23666. The following is the adjusted base year inventory developed for the hypothetical nonattainment area:

1990 Adjusted Base Year Inventory (lb/day)

= 1990 rate-of-progress inventory - (FMVCP and RVP reductions between 1990 and 1999)

= 5,800 lb/day - 600 lb/day = 5,200 lb/day.

Step 4: Calculate 3 percent per year reductions

The 1990 adjusted base year inventory calculated relative to the 1999 milestone year is multiplied by 0.09 to calculate the required emission reductions from 1996 to 1999.

9 percent reduction = 5,200 x 0.09 = 468 lb/day

Step 5: Calculate fleet turnover correction term

The fleet turnover correction term is the difference between the FMVCP/RVP emission reductions calculated in step 3 and the previous milestone year's FMVCP/RVP emission reductions. In this hypothetical example, the FMVCP/RVP reductions calculated relative to 1996 are assumed to be 500 lb/day. Therefore, the fleet turnover correction term for 1999 is 100 lb/day (i.e., 600 lb/day - 500 lb/day).

Step 6: Calculate target level of emissions for 1999

To calculate the target level of emissions for 1999, the required emission reductions calculated in step 4 and the fleet turnover correction term are subtracted from the 1996 milestone target level. The 1996 target level was calculated to be 4,000 lb/day in the EPA document Guidance on the Adjusted Base Year Emissions Inventory and the 1996 Target for the 15 Percent Rate-of-Progress Plan (see reference 1).

Target level = (1996 milestone target level) - (reductions calculated in step 4) - (fleet turnover correction term calculated in step 5)

= 1996 target level - (5,200 lb/day * 0.09) - (600 lb/day - 500 lb/day)

= 4,000 lb/day - 468 lb/day - 100 lb/day

= 3,432 lb/day

This area's plan must therefore demonstrate that the projected emissions for 1999, reflecting the adopted control strategy, will be less than or equal to 3,432 lb/day.

2.3 Conditions Permitting Less than a 3 Percent VOC Emission Reduction

A State may be permitted to achieve VOC emission reductions less than 3 percent if it demonstrates that the plan includes all measures that, given technological achievability, can feasibly be implemented in the given area. In addition, the State must demonstrate that its plan includes measures that are achieved in practice by sources in the same source category in nonattainment areas of the next higher classification. The measures necessary to meet this requirement will be determined on a case-by-case basis. Any determination to lessen the 3 percent requirement will be reviewed at each milestone demonstration, and revised to include any new measures achieved in practice by sources in the same source category in any State, allowing a reasonable time to implement such measures [section 182(c)(2)(B)(ii)].

It is important to note that the waiver provision does not apply to extreme ozone nonattainment areas. Furthermore, States must understand that the attainment of the ozone NAAQS is the underlying requirement of the Act. Although less than a 3 percent VOC emission reduction may be permitted for the purposes of satisfying the rate-of-progress requirements, a State must have sufficient emission reductions in its SIP to attain the ozone NAAQS by its applicable attainment date. Although it is not necessary to demonstrate attainment to obtain a waiver, the waiver does not relieve serious and severe areas from the obligation to demonstrate attainment.

3.0 ATTAINMENT DEMONSTRATION REQUIREMENTS

This section of the document describes the attainment demonstration requirements for those nonattainment areas that are required or choose to use photochemical grid modeling, and describes special air quality situations involving attainment demonstrations.

3.1 Modeling Requirements for Attainment Demonstrations

The UAM is described in the EPA document entitled User's Guide for the Urban Airshed Model (see reference 2). In addition, the General Preamble (57 FR 13510) should be consulted regarding the attainment demonstration implications of using UAM or other photochemical grid models.

Procedures to follow in applying photochemical grid models to support the attainment demonstration are described in Guideline for Regulatory Application of the Urban Airshed Model (see reference 3). Chapters 1 and 2 of the Guideline identify establishment of a modeling protocol. The protocol identifies Technical Committees whose responsibilities are to: (1) define the geographic location and specific meteorological episodes to be modeled (note that the modeling domain will generally be larger than the nonattainment area); (2) develop compatible inputs for the model application such as episode specific air quality, wind fields, and emissions; (3) apply the model and troubleshoot results so that performance is acceptable; (4) develop projected emissions for the required attainment date; and (5) apply the model using projected emissions to see whether predicted ozone concentrations are 120 parts per billion (ppb) or less throughout the modeling domain (i.e., the model demonstrates attainment). If the model does not demonstrate attainment, additional control measures must be developed and their effectiveness evaluated. This is an iterative process until attainment is demonstrated.

It should be noted that both biogenic and anthropogenic emissions are included in the modeling. Also, for consistency the projected emissions should reflect the control measures used to obtain the 15 percent VOC emission reduction required between 1990 and 1996, additional annual 3 percent reductions thereafter, and where necessary, additional control measures to achieve attainment.

The required modeling protocol should also identify a Policy Oversight Committee. This group provides input on the strategies to be tested and is responsible for reaching consensus on the strategy to implement in the 1994 SIP revision.

The modeling demonstration supporting the 1994 SIP revision should be submitted to the appropriate U.S. EPA Regional Office(s) by November 15, 1994. The Regional Office will then evaluate the plan and prepare a technical support document (TSD) assessing the adequacy of the documentation of the analysis. The following should be provided by States to support preparation of this document: (1) the modeling protocol with episode dates and the modeling domain defined; (2) the emissions input preparation for the base case inventory, emission projections and emission estimates derived for the attainment demonstration to be implemented in the 1994 SIP revision; (3) air quality and meteorological input preparations for the selected episodes; (4) diagnostic analyses used to troubleshoot model performance, including the rationale for revisions to inputs which resulted; (5) results of the model performance evaluation; (6) air quality predictions corresponding with the attainment demonstration to be implemented in the SIP; and (7) procedures which the EPA or other interested parties can follow to gain access to all relevant input and output files so as to replicate

results, if desired. Each of these seven required components is described in greater detail in Guidance on Urban Airshed Model (UAM) Reporting Requirements for Attainment Demonstration (see reference 4). Regional Offices are encouraging States to submit these items as soon as possible to receive early feedback.

States should plan to achieve emission reductions as early in the process as possible, since section 181(b)(2) requires EPA to make a determination as to whether an area has attained the ozone NAAQS within 6 months following an applicable attainment date. This requirement dictates the use of the most recent 3 years of air quality data in determining whether a nonattainment area has attained the ozone NAAQS. For example, for a serious area with an attainment date of November 1999, EPA will use air quality data for 1997 - 1999 to determine if the nonattainment area has attained the ozone NAAQS. [See the General Preamble (57 FR 13509).]

3.2 Special Air Quality Situations

Areas Requiring Emission Reductions in Addition to 3 Percent per Year

There may be circumstances under which a nonattainment area in order to demonstrate attainment of the NAAQS will require additional VOC and/or NO_x reductions in excess of the 3 percent per year reduction mandated in section 182(c)(2)(B)(i). The underlying requirement of the SIP is that nonattainment areas must achieve attainment of the NAAQS by their attainment date, not solely the achievement of the 3 percent per year reduction requirement.

Multi-State Nonattainment Areas

Section 182(j) defines and establishes requirements for ozone nonattainment areas covering areas in more than one State called multi-State nonattainment areas. Beyond the requirements in section 182 for the different nonattainment area classifications, section 182(j)(1) requires States in these areas to coordinate the revisions and implementation of the SIP's applicable to the nonattainment areas and to use photochemical grid modeling (or another method determined by EPA) as part of the SIP-preparation process.

A joint modeling demonstration must be submitted by all States in the modeling domain. The EPA will not to approve any attainment demonstration unless all of the affected States have agreed to a strategy. This demonstration should identify the strategy to be used for attainment and should identify the emission reduction necessary in each State. The demonstration should reference the applicable modeling protocol and include a schedule for developing control measures and the attainment demonstration for the entire multi-State area. Where all of the States are in the same Region, only one modeling demonstration must be submitted. If the States are in different Regions, the demonstration should be sent to each Region. In addition, each State must individually submit regulations to achieve the necessary reductions for that State.

Section 182(j)(2) recognizes that if any State in which there is located a portion of a multi-State nonattainment area fails to provide a demonstration of attainment within the required period, the State may petition EPA to make a finding that the State(s) would have been able to make such a demonstration "but for the failure of one or more other States, in which other portions of the area are located, to commit to the implementation of all measures required by section 182...." If the EPA Administrator makes a finding that this situation is occurring, the sanctions of section 179 shall not

apply to the petitioning State(s). Section III.A.9 of the General Preamble provides the primary guidance for these nonattainment area SIP's (57 FR 13529).

States Included in More than One Modeling Domain

There are a number of cases where a State is included in more than one modeling domain. In this situation, the State must ensure that control measures are applied consistently in all model applications.

International Border Areas

Section 179B applies to nonattainment areas that are affected by emissions emanating from outside the United States. This section provides relief for nonattainment areas along international borders analogous to what is provided to States within multi-State nonattainment areas by section 182(j): EPA shall approve the SIP if it meets all the requirements in the Act and if the State establishes that the implementation of the plan would be adequate to attain and maintain the relevant NAAQS "but for emissions emanating from outside the United States." Section 179B (created by Title VIII, section 818 of the Act) and section V.C of the General Preamble provide SIP guidance for areas on international border areas.

Areas with Differing Required Attainment Dates

There are several situations in which areas with later statutory attainment dates can affect areas with earlier attainment dates. In some cases, a modeling domain may include several designated nonattainment areas of varying severity. A common example is a domain containing a moderate nonattainment area(s) (required attainment date of 1996) and a serious (1999) or severe (2005 or 2007) nonattainment area. In other cases, an area may be impacted by another area outside the modeling domain.

Each ozone nonattainment area is still subject to the applicable requirements for a demonstration of attainment under section 182(b)(1)(A) and (c)(2). For example, a moderate area located within the transport region is still subject to the 6-year attainment deadline and the 15 percent reduction requirement. However, this area is (at least, presumptively) being affected by transport from another area(s) and is possibly affecting other areas, as well. If the areas that are affecting air quality levels in this moderate area have a higher classification, that moderate area may be receiving transported ozone concentrations exceeding the NAAQS well after its own mandatory attainment date.

In general, two situations exist in which an area might be subject to additional emission reduction requirements related to the demonstration of attainment. In the first, an area might be receiving such high levels of transport that even if it reduced its own emissions dramatically (e.g., totally eliminated its own emissions), the incoming ozone and precursors would be high enough to continue to cause violations of the standard beyond the applicable attainment date. In the second situation, the area might be able to achieve additional reductions (beyond those required under section 182), but even where those additional reductions could be achieved to demonstrate attainment, the question arises whether it is equitable to require those reductions or to allow more time for the reductions in the "upwind" area to take place. The Act provides no express relief for these situations. Thus, where the demonstration of attainment is complicated by transport between two areas of different classifications, the State is still responsible for developing and submitting demonstrations

which show that the standard will be attained by the applicable date. In other words, the State must provide for sufficient emission reductions on a schedule that will ensure attainment by the deadline prescribed in the Act (e.g., by 1996 for moderate areas). The area does have the option of requesting to be reclassified to the next higher classification.

When such areas develop the demonstration of attainment due in November 1994, they should provide a comprehensive assessment of the impacts of all control measures being implemented in both the local and upwind areas. States should clearly show the extent to which the downwind area is dependent on upwind strategies while fully meeting its own requirements associated with its classification. The EPA will continue working with States facing this situation to resolve these issues.

Exceedances Monitored within a Modeling Domain Due Primarily to Emissions in Another Domain

Generally, episodes in which emissions included within a modeling domain do not play a significant role in contributing to monitored exceedances within that domain should not be modeled in an attainment demonstration. Guidance on "overwhelming transport" contained in sections 3.1 and 3.2 of Criteria for Assessing the Role of Transported Ozone/Precursors in Ozone Nonattainment Areas (see reference 5) may be used to identify unsuitable episodes. Alternatively, diagnostic tests described in section 4.3 of Guideline for Regulatory Application of the Urban Airshed Model (see reference 3) may be used to identify unsuitable episodes. Note that this guidance is not saying that episodes in which transported ozone/precursors play an important role are unsuitable for modeling. This guidance is singling out cases in which drastic changes in emissions within the domain are likely to result in minor or negligible differences in predicted daily maximum ozone concentrations due to large amounts of extraneous ozone/precursors.

An episode which is otherwise consistent with requirements in section 3.1 of Guideline for Regulatory Application of the Urban Airshed Model may be rejected due to overwhelming transport. In this case, evidence should be presented as part of the documentation that (a) those undertaking modeling for the upwind domain(s) identified as likely sources of the transport have been contacted; and (b) agreement has been reached that the upwind area(s) will consider at least one episode with the appropriate transport pattern to ensure that predicted concentrations within the upwind grid or at the upwind boundary of the downwind grid are at or below 120 ppb. Sections 176A(b) and 184(a)-(c) of the Clean Air Act provide one means for facilitating such interdomain coordination. Other ad hoc arrangements may be acceptable if evidence of a good faith effort to implement resulting agreements is demonstrated.

4.0 NO_x EMISSION REDUCTIONS

Section 182(c)(2)(C) of the Act allows States to substitute actual NO_x emission reductions which occur after 1990 to meet post-1996 VOC emission reduction requirements. This section of the document describes the procedure for calculating NO_x emission reductions which can be used to meet post-1996 VOC emission reduction requirements.

4.1 Substitution of NO_x Emission Reductions for Post-1996 VOC Emission Reductions

Section 182(c)(2)(C) states that actual NO_x emission reductions which occur after 1990 can be used to meet post-1996 emission reduction requirements, provided that such reductions meet the criteria outlined in EPA's December 15, 1993 NO_x Substitution Guidance. The condition for meeting the rate-of-progress requirement is that the sum of all creditable VOC and NO_x emission reductions must equal 3 percent per year averaged over each applicable milestone period. The percent VOC reduction is determined from the VOC rate-of-progress inventory and the percent NO_x reduction is determined from the NO_x rate-of-progress inventory. In addition, the overall VOC and NO_x reductions must be consistent with the area's modeled attainment demonstration. In other words, the NO_x emission reductions creditable toward the rate-of-progress plan cannot be greater than the cumulative reductions dictated by the modeled attainment demonstration. This is necessary because there may be a number of different control strategies that could be used to show attainment, and the rate-of-progress plan must be consistent with the strategy selected by the State as its attainment strategy. It should be noted, however, that if a State chooses to make mid-course corrections to its attainment demonstration, it can also make corresponding changes to the rate-of-progress plan.

Although the NO_x supplement to the General Preamble does not specify that photochemical grid modeling must be used for this demonstration, this modeling is generally necessary to determine the extent to which NO_x can be substituted for VOC. In addition, use of photochemical grid modeling for NO_x substitution demonstrations would be consistent with requirements that photochemical modeling be used to justify exempting the area from NO_x controls or lessening the amount of NO_x controls required.

If a State plans to substitute NO_x reductions for VOC reductions, separate target level(s) of emissions will have to be calculated for both NO_x and VOC. Figure 3 provides an overview of the procedure for calculating the VOC target level and Figures 4 and 4a provides an overview of the procedure for calculating the NO_x target level. The target levels are calculated as discussed in section 2 of this document with some exceptions.

4.2 Calculation of Post-1996 NO_x and VOC Target Levels of Emissions

The target levels of emissions represent the maximum amount of emissions allowed in each post-1996 milestone year given the 3 percent per year rate-of-progress requirement. The target level(s) of VOC emissions can be calculated using the following equation:

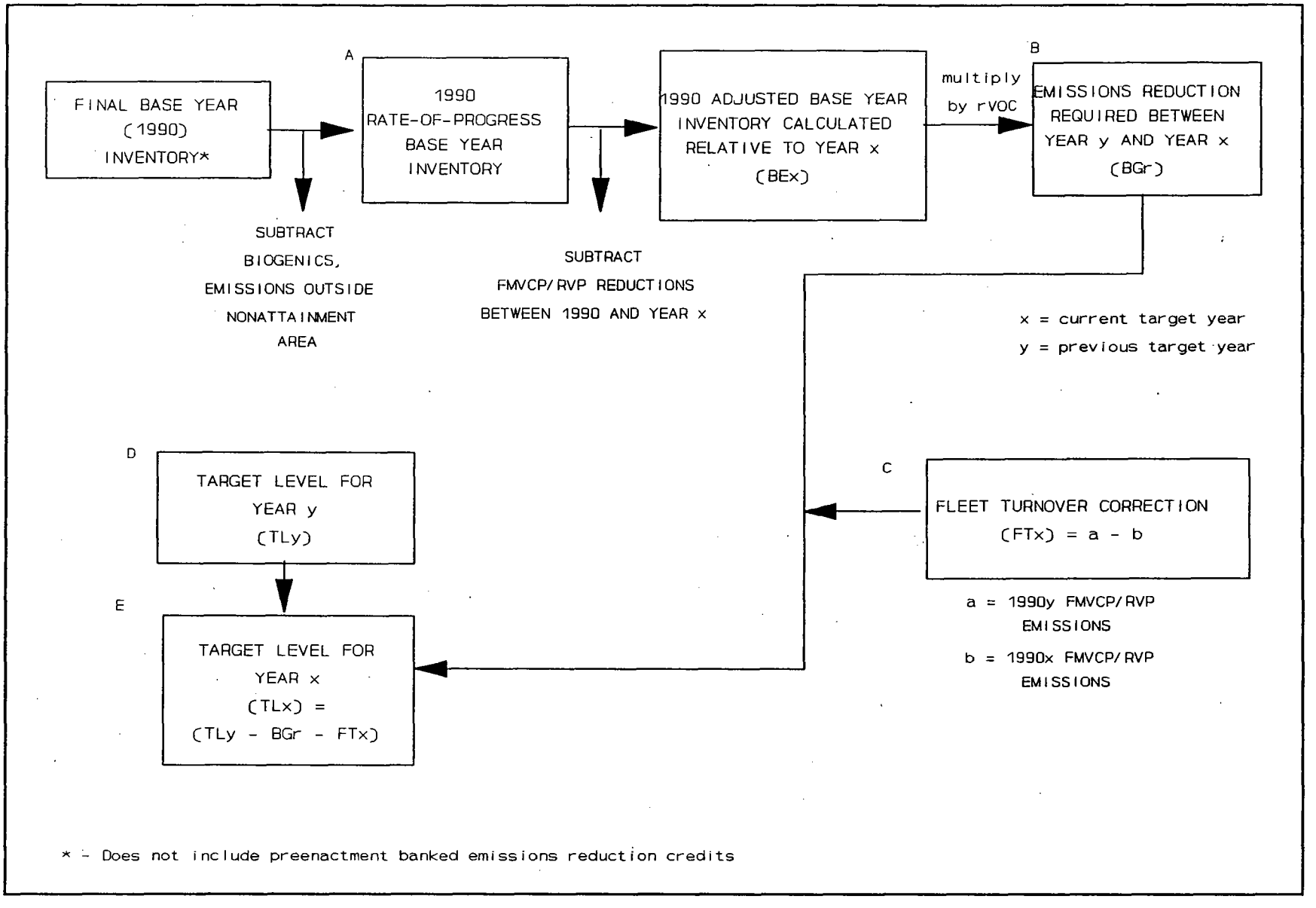

Figure 3. Flowchart for generic post-1996 rate-of-progress VOC calculations (with NO_x substitution)

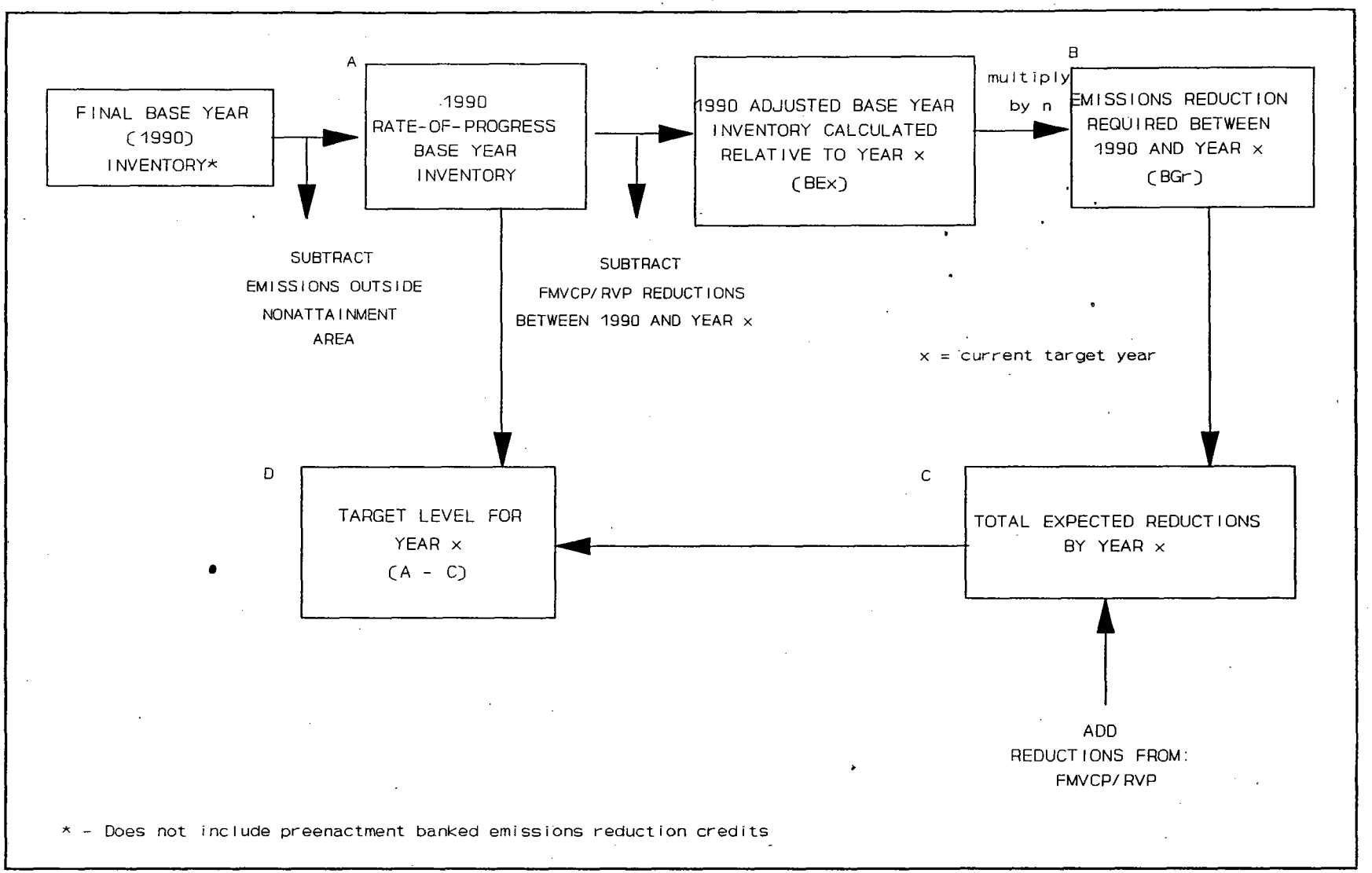

Figure 4. Flowchart for rate-of-progress NO_x calculation for 1999

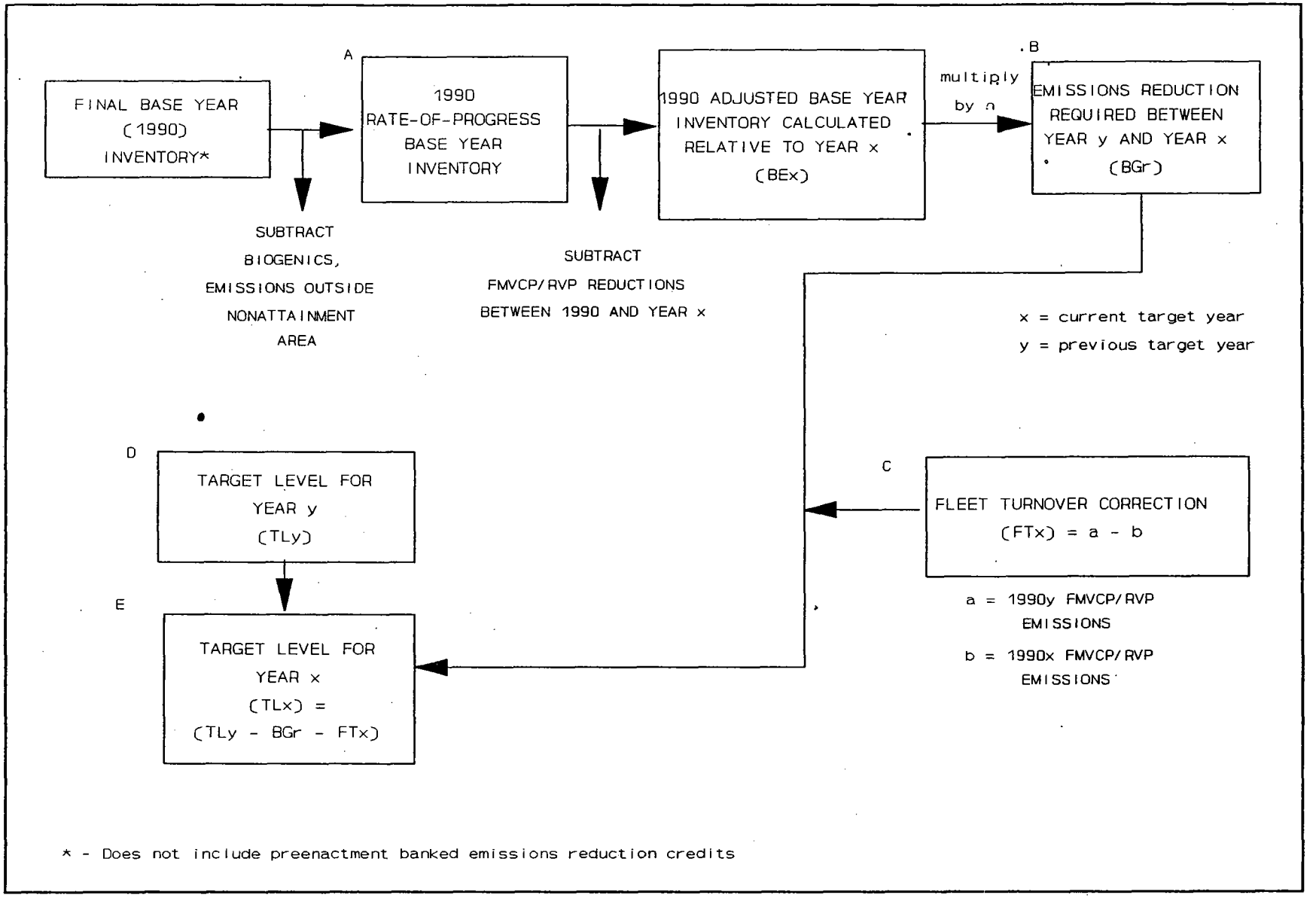

Figure 4a. Flowchart for generic post-1999 rate-of-progress NO_x calculations

$$TL_{x,VOC} = TL_{y,VOC} - BG_{r,VOC} - FT_{x,VOC}$$

where:

x	=	Current milestone or attainment year
y	=	Year of previous milestone
$TL_{x,VOC}$	=	Target level of VOC emissions for year x (lb/day)
$TL_{y,VOC}$	=	Target level of VOC emissions for year y (in lb/day)
$BG_{r,VOC}$	=	Emission reduction requirement for VOC for year x (in lb/day)
$FT_{x,VOC}$	=	Fleet turnover correction term for VOC for year x (in lb/day).

The target level of NO_x emissions for 1999 can be calculated using the following equation:

$$TL_{1999} = 1990\ ROP - BG_{r,NOx} - FMVCP/RVP_{1999}$$

where:

1990 ROP	=	1990 rate-of-progress NO_x inventory
$BG_{r,NOx}$	=	NO_x emission reduction requirement for 1999 (in lb/day)
$FMVCP/RVP_{1999}$	=	FMVCP/RVP NO_x reductions calculated relative to 1999 (in lb/day)

The target level of NO_x emissions for years after 1999 can be calculated using the following equation:

$$TL_{x,NOx} = TL_{y,NOx} - BG_{r,NOx} - FT_{x,NOx}$$

where:

x	=	Current milestone or attainment year
y	=	Year of previous milestone
$TL_{x,NOx}$	=	Target level of NO_x emissions for year x (lb/day)
$TL_{y,NOx}$	=	Target level of NO_x emissions for year y (in lb/day)
$BG_{r,NOx}$	=	Emission reduction requirement for NO_x for year x (in lb/day)
$FT_{x,NOx}$	=	Fleet turnover correction term for NO_x for year x (in lb/day).

These equations can be used to calculate the target level of emissions for each post-1996 milestone year. The reason that the 1999 NO_x target is calculated differently is that there is not a 1996 NO_x target that can be used to calculate the 1999 target. Once the 1999 NO_x target is established it can be used to calculate the next target. The specific steps needed to calculate each target are discussed below.

There are six major steps in calculating a post-1996 target level of emissions. The first four steps are needed to calculate the 3 percent per year rate-of-progress emission reduction. The first three of these steps, developing the 1990 base year inventory, developing the 1990 rate-of-progress inventory, and developing the adjusted base year inventory were discussed in detail for VOC in section 2 of this document. The following describes how the post-1996 target levels should be calculated when NO_x substitution for VOC will occur.

Step 1: Develop the 1990 base year inventory

The total 1990 base year VOC and NO_x emissions from the five major emission source categories (point, area, on-road and off-road mobile, and biogenic) are compiled. It should be noted

that the base year inventory used for the post-1996 rate-of-progress plan must be consistent with the base year inventory used for attainment demonstration purposes. Any changes that were made to the inventory between submittal of the 15 percent rate-of-progress plan and the post-1996 rate-of progress plan should be reflected.

Step 2: Develop the 1990 rate-of-progress base year inventory for nonattainment area

Biogenic source emissions[1] and other emissions from sources located outside the nonattainment area, but included in step 1, are removed from the 1990 base year inventory.

Step 3: Calculate the 1990 adjusted base year inventories

The Act specifies the emissions "baseline" from which each emission reduction milestone is calculated. Section 182(c)(2)(B) states that the reductions must be achieved "from the baseline emissions described in subsection (b)(1)(B)." This baseline value is termed the 1990 adjusted base year inventory. The baseline excludes the VOC and NO_x emissions that would be eliminated by FMVCP regulations promulgated by January 1, 1990, and by RVP regulations promulgated by the time of enactment (55 FR 23666, June 11, 1990), which require maximum RVP limits for gasoline to be sold in nonattainment areas during the peak ozone season.

The 1990 adjusted base year inventories must be calculated relative to each milestone and attainment year because the emission reductions associated with the FMVCP increase each year due to fleet turnover. The only adjustment that must be made to the inventories in each case is to recalculate mobile source emissions, including VOC emissions from vehicle refueling, using MOBILE5a. This adjustment is made by calculating a separate mobile source emission factor for each applicable milestone year. The emission factors are then multiplied by 1990 VMT, or gallons of gasoline for refueling emissions, to yield the mobile source emissions that must be subtracted from the 1990 rate-of-progress base year inventories to calculate the 1990 adjusted base year inventories for each milestone/attainment year. These reductions are calculated as follows:

FMVCP/RVP Reductions Between 1990 and Current Target Year (x):

Subtract

Adjusted 1990 mobile source emissions = (1990 VMT)(MOBILE5a emission factors from B)

from

Actual 1990 mobile source emissions = (1990 VMT)(MOBILE5a emission factors from A)

---

[1] Most emission inventories do not contain biogenic NO_x emissions. If these emissions are included, they must be subtracted in developing the rate-of-progress inventory.

A) MOBILE5a run from the 1990 base year inventory. Emission factors from this run will be used with actual 1990 VMT to calculate actual 1990 emissions. If the refueling emission factor for VOC is calculated in MOBILE5a as a grams per gallon of gasoline factor, that factor should be multiplied by actual 1990 gasoline throughput and those emissions should be included in the 1990 actual mobile source emissions.

B) MOBILE5a run as in the 1990 base year inventory, except that year "x" will be used as the evaluation year (this will change the vehicle mix to account for fleet turnover). Emission factors from this run will be used with actual 1990 VMT to calculate adjusted 1990 emissions relative to year "x." If the refueling emission factor for VOC is calculated in MOBILE5a as a grams per gallon of gasoline factor, that factor should be multiplied by actual 1990 gasoline throughput and those emissions should be included in the 1990 adjusted mobile source emissions.

A detailed description of the procedure for calculating the 1990 adjusted base year inventory is provided in an EPA document entitled Guidance on the Adjusted Base Year Emissions Inventory and the 1996 Target for the 15 Percent Rate-of-Progress Plans (see reference 1). The adjusted base year inventory must be calculated the same way for each post-1996 milestone/attainment year.

Step 4: Calculate required creditable reductions

The percent reduction required is calculated separately for VOC and NO_x. The sum of the percent VOC reduction and the percent NO_x reduction must equal the 3 percent per year required reduction. The VOC reduction is equal to the number of years between milestone dates (usually 3) multiplied by 0.03 minus the percent (n) that will be achieved through NO_x reductions.

$$\text{Percentage VOC reduction} = r_{voc} = [0.03 * (x-y)] - n$$

where:

r_{voc}	=	percent VOC reduction needed to meet the rate-of-progress requirement.
(x-y)	=	Number of years between current (x) and previous (y) target dates.
n	=	percent of reductions that will be achieved through NO_x reductions

Next, these percentage figures are multiplied by the adjusted base year inventories calculated relative to the current milestone/attainment date to yield the required VOC and NO_x emission reductions.

$$BG_{r,voc} = BE_{x,voc} * r_{voc}$$

and

$$BG_{r,NOx} = BE_{x,NOx} * n$$

where:

$BG_{r,VOC}$	=	VOC emission reduction requirement for milestone date (in lb/day)
$BG_{r,NOx}$	=	NO_x emission reduction requirement for milestone date (in lb/day)
$BE_{x,VOC}$	=	1990 adjusted base year VOC inventory calculated relative to year x
$BE_{x,NOx}$	=	1990 adjusted base year NO_x inventory calculated relative to year x
r_{VOC}	=	percent VOC reduction needed to meet the rate-of-progress requirement.
n	=	percent NO_x reduction needed to meet the rate-of-progress requirement.

Step 5: Calculate fleet turnover correction term

For VOC and for the post-1999 NO_x target, the fleet turnover correction is needed to account for the mobile source emission reductions that would have occurred under the preenactment FMVCP and RVP requirements (under 55 FR 23666), between consecutive milestone years. The calculation of this correction for VOC is described in detail in section 2 of this document. This term is calculated the same way for NO_x.

For the 1999 NO_x target, different adjustments need to be made because there is not a target from a previous year that accounts for reductions between 1990 and 1996. Adjustments must be made to account for emission reductions associated with FMVCP and RVP because these emission reductions are not creditable for substitution. Unlike the adjustments made to the VOC rate-of-progress base year emission inventory, the effects of reasonably available control technology (RACT) fix-ups do not need to be included in the adjustment calculation because they do not affect NO_x emissions. Due to the lack of a NO_x performance standard for I/M programs prior to enactment of the 1990 amendments to the Act and the negligible impact of corrections to I/M programs on NO_x emissions, the NO_x target does not need to be adjusted to account for I/M program corrections.

The NO_x adjustment for FMVCP for the 1999 target is calculated as follows:

FMVCP/RVP NO_x Reductions Between 1990 and 1999:

Subtract

Adjusted 1990 mobile source emissions = (1990 VMT)(MOBILE5a emission factors from B)

from

Actual 1990 mobile source emissions = (1990 VMT)(MOBILE5a emission factors from A)

A) MOBILE5a run from the 1990 base year inventory. Emission factors from this run will be used with actual 1990 VMT to calculate actual 1990 emissions.

B) MOBILE5a run as in the 1990 base year inventory, except that 1999 will be used as the evaluation year (this will change the vehicle mix to account for fleet turnover). Emission factors from this run will be used with actual 1990 VMT to calculate adjusted 1990 emissions relative to 1999.

Step 6: Calculate post-1996 target levels of emissions

To calculate the target level VOC emissions, the required emission reductions calculated in step 4 and the fleet turnover correction term from step 5 are subtracted from the previous milestone's target level. For the purposes of calculating the 1999 VOC target, it may be necessary to recalculate the 1996 target if the base year inventory was significantly revised after submittal of the 15 percent rate-of-progress plan.

VOC target level = (previous milestone's target level) - (reductions required to meet the rate-of-progress requirement, calculated in step 4) - (fleet turnover correction term, calculated in step 5).

The 1999 NO_x target is calculated by adding the required emission reductions calculated in step 4 to the expected reductions from the FMVCP and RVP and subtracting this total from the 1990 NO_x rate-of-progress inventory.

NO_x target level = (1990 NO_x rate-of-progress inventory) - [(reductions required to meet the rate-of-progress requirement, calculated in step 4) + (reductions from 1990 to target year from FMVCP and RVP, calculated in step 5)].

To calculate the post-1999 target level NO_x emissions, the required emission reductions calculated in step 4 and the fleet turnover correction term from step 5 are subtracted from the previous milestone's target level.

Post-1999 NO_x target level = (previous milestone's target level) - (reductions required to meet the rate-of-progress requirement, calculated in step 4) - (fleet turnover correction term, calculated in step 5).

These targets represent the level of VOC and NO_x emissions that must be achieved in order for a nonattainment area to demonstrate that the rate-of-progress requirement will be met. Once these targets have been calculated, the overall emission levels should be compared to the area's attainment demonstration to ensure that the rate-of-progress plan is consistent with the strategy selected for the area's attainment demonstration.

4.3 Creditability of Pre-1996 VOC and NO_x Reductions

Under section 182(c)(2)(B)(ii) of the Act, States can credit VOC emission reductions achieved in the 1990-1996 period to the post-1996 rate-of-progress plan, if they are in excess of the 15 percent VOC reductions (net of growth) required between 1990 and 1996. In addition, section 182(c)(2)(C) of the Act provides for substitution of NO_x emission reductions (net of growth) for required post-1996 VOC emission reductions. As discussed in the "General Preamble for the Implementation of Title I of the Clean Air Act Amendments of 1990," (57 FR 13517), this includes NO_x reductions occurring in the post-1990 period such as NO_x reductions achieved as a result of the NO_x RACT requirements of the Act. Because some NO_x RACT provisions may allow 30-day averaging, States will need to convert emissions from any source subject to such rules to a typical summer day level of emissions.

4.4 Example Calculation of Post-1996 VOC and NO_x Target Levels

This section presents a hypothetical example that describes target levels for 1999. Figures 5 and 6 show the calculation procedure for this example for VOC and NO_x, respectively.

Calculation of 1999 Target Levels of Emissions

Developing the 1990 base year inventory and the 1990 rate-of-progress inventory are the first two steps in calculating the post-1996 target levels. These inventories, which are briefly presented below, were to have been submitted by the States in their 15 percent rate-of-progress plans. The EPA document entitled Guidance on the Adjusted Base Year Emissions Inventory and the 1996 Target for the 15 Percent Rate-of-Progress Plans (see reference 1) describes these two inventories in more detail.

Step 1: Develop the 1990 base year inventory (lb/day)

	VOC	NO_x
Point Sources	1,000	5,000
Area Sources	2,500	2,000
Mobile Sources	3,500	+ 3,000
Biogenic Sources	+ 5,000	–
Total	12,000	10,000

Step 2: Develop 1990 rate-of-progress base year inventory (lb/day)

	VOC	NO_x
1990 base year inventory	12,000	10,000
Point Sources	-200	-1,000
Area Sources	-500	-500
Mobile Sources	-500	-700
Biogenic Sources	-5,000	
Total	5,800	7,800

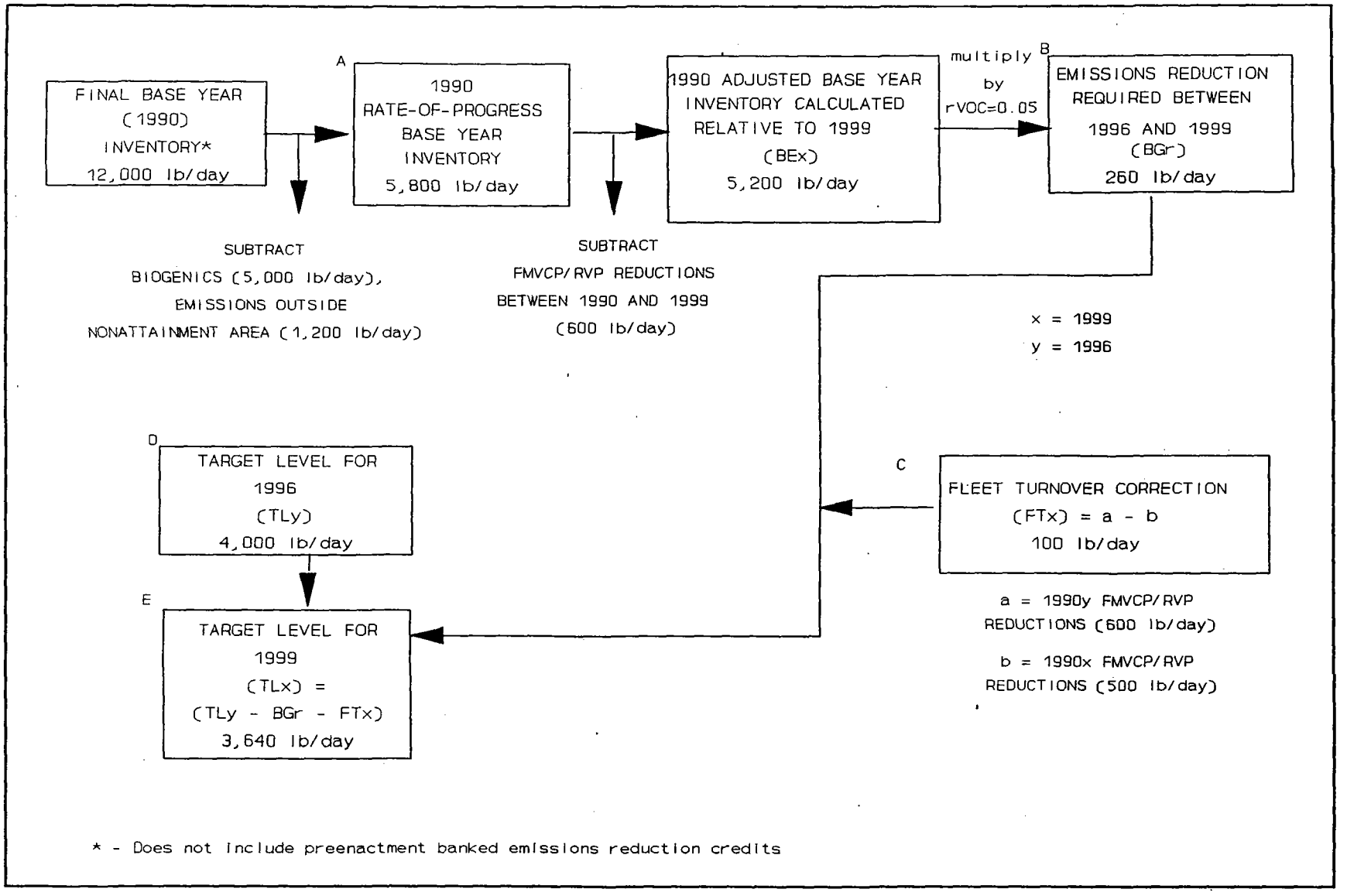

Figure 5. Flowchart for hypothetical example 1999 rate-of-progress VOC calculations (with NO_x substitution)

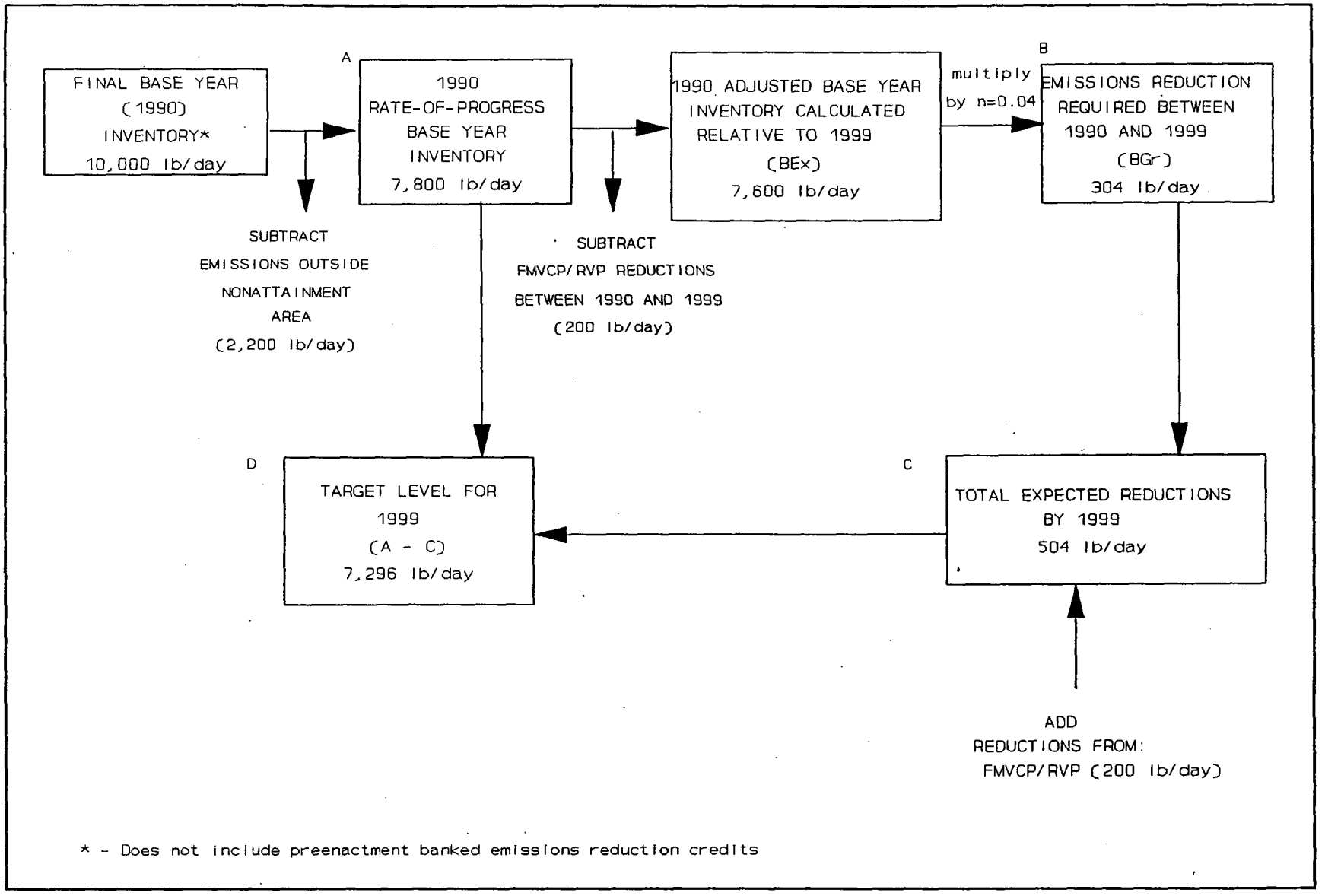

Figure 6. Flowchart for hypothetical example 1999 rate-of-progress NO_x calculations

Step 3: Calculate the 1990 adjusted base year inventory for 1999

The only adjustment that must be made to the rate-of-progress inventory is to calculate mobile source emission reductions using MOBILE5a. This adjustment is made by calculating a mobile source emission factor for 1999, and multiplying the emission factor by 1990 VMT to yield mobile source emissions for the 1990 adjusted base year inventory. For this example, the State estimates that there will be a reduction of 600 lb/day of VOC due to fleet turnover up through 1999 and the RVP limit specified for the nonattainment area in 55 FR 23666, and a NO_x reduction of 200 lb/day for the FMVCP and RVP. The following is the adjusted base year inventory developed for the hypothetical nonattainment area:

1990 adjusted VOC base year inventory	=	1990 VOC rate-of-progress inventory - FMVCP/RVP reductions
	=	5,800 lb/day - 600 lb/day
	=	5,200 lb/day.
1990 adjusted NO_x base year inventory	=	1990 NO_x rate-of-progress inventory - FMVCP/RVP reductions
	=	7,800 lb/day - 200 lb/day
	=	7,600 lb/day.

Step 4: Calculate required creditable reductions

For 1999, the total percentage required reduction is 9 percent (3 percent per year x 3 years). In this example, VOC emission reductions will account for 5 percent of the reductions needed by 1999 and NO_x reductions will account for the remaining 4 percent. This example assumes that these percent reductions are consistent with the area's attainment demonstration. The required VOC and NO_x emission reductions from 1996 to 1999 are calculated as follows:

Percent NO_x reduction $= n = 4\%$.

Percent VOC reduction $= r_{VOC} = [0.03 * (x-y)] - n$
$= [0.03 * (1999-1996)] - 0.04 = 0.05 = 5\%$

Next, these percentage figures are multiplied by the adjusted base year inventories calculated relative to the current milestone/attainment date to yield the required VOC and NO_x emission reductions.

$$BG_{r,VOC} = BE_{x,VOC} * r_{VOC}$$

$$= 5{,}200 * 0.05 = 260 \text{ lb/day}$$

and

$$BG_{r,NOx} = BE_{x,NOx} * n$$

$$= 7{,}600 * 0.04 = 304 \text{ lb/day.}$$

Severe and extreme nonattainment areas must also calculate the post-1996 rate-of-progress emission reductions for each of their milestone/attainment dates.

Step 5: Calculate fleet turnover correction term

As noted previously, this term is calculated differently for VOC and NO_x for the 1999 example. For VOC, the fleet turnover correction term is the difference between the FMVCP/RVP emission reductions calculated in step 3 and the previous milestone year's FMVCP/RVP emission reductions. In this hypothetical example, the FMVCP/RVP reductions calculated relative to 1996 are assumed to be 500 lb/day of VOC. Therefore, the fleet turnover correction term for 1999 is 100 lb/day of VOC (i.e., 600 lb/day - 500 lb/day). The NO_x correction factor is the reductions from the FMVCP and RVP. In this example, the FMVCP/RVP NO_x reductions are 200 lb/day.

Step 6: Calculate target level of emissions for 1999

To calculate the target level of emissions for VOC for 1999, the required emission reductions calculated in step 4 and the fleet turnover correction term are subtracted from the 1996 milestone target level. The 1996 target level was calculated to be 4,000 lb/day in the EPA document Guidance on the Adjusted Base Year Emissions Inventory and the 1996 Target for the 15 Percent Rate-of-Progress Plan (see reference 1).

VOC target level = (1996 milestone target level) - (reductions calculated in step 4) - (fleet turnover correction term)

= 1996 target level - (5,200 lb/day * 0.05) - (600 lb/day - 500 lb/day)

= 4,000 lb/day - 260 lb/day - 100 lb/day

= 3,640 lb/day.

The target for NO_x is calculated by subtracting the sum of the NO_x reduction required and FMVCP/RVP reductions between 1990 and 1999 from the 1990 rate-of-progress inventory.

NO_x target level = (1990 NO_x rate-of-progress inventory) - [(required reductions for 1999 calculated in step 4) + (FMVCP/RVP reductions)]

= 7,800 lb/day - (7,600 lb/day * 0.04) - (200 lb/day)

= 7,296 lb/day.

This area's plan must therefore demonstrate that the projected 1999 VOC inventory will be less than or equal to 3,640 lb/day and the projected 1999 NO_x inventory will be less than or equal to 7,296 lb/day.

5.0 CONTROL STRATEGIES

States will need to include control strategies in their post-1996 rate-of-progress plans to demonstrate how emissions will be controlled to achieve their milestone target level(s) of emissions and to demonstrate attainment of the ozone NAAQS by their attainment date. States may demonstrate emission reductions by developing, adopting, and implementing Federally enforceable control measures for stationary and mobile sources or by documenting improvements in rule effectiveness (RE). Existing and future Federal regulatory programs for VOC and NO_x sources have been discussed in detail in the following two documents:

- Guidance for Growth Factors, Projections, and Control Strategies for the 15 Percent Rate-of-Progress Plans (see reference 6).

- Guidance on the Relationship Between the 15 Percent Rate-of-Progress Plans and Other Provisions of the Clean Air Act (see reference 7).

5.1 Mandatory Requirements

This section identifies the specific measures required by the Act for each classification of ozone nonattainment area. In addition, Table 2 lists the SIP submittal requirements for moderate and above nonattainment areas in chronological order.

Serious Nonattainment Area Requirements

Under section 182(c) of the Act, serious nonattainment areas are subject to the control measures required for moderate areas (i.e., RACT rule fix-ups, RACT catch-ups, I/M program corrections, basic I/M, stage II vapor recovery) as well as the following additional control measures:

- Enhanced I/M program.

- A major stationary source cut-off for RACT of 50 tons per year (tpy) VOC or NO_x.

- Clean-fuel vehicle program in areas with a population greater than or equal to 250,000.

- Emission offset ratio of 1.2:1.

Emission reductions associated with stage II vapor recovery, RACT catch-ups, basic I/M, and the first three of the four control measures listed above are creditable toward the post-1996 VOC emission reduction requirement to the extent that they occur between 1990 and 1999; represent emission reductions that are real, permanent, and enforceable; and are not needed to meet the 15 percent rate-of-progress requirement. Due to uncertainties in projecting new source growth and determining the level of emission reductions needed to offset minor source growth, EPA will not allow States to take credit in their post-1996 rate-of-progress plan for projected emission reductions resulting from emission offsets. However, any additional, actual, permanent, and enforceable emission reductions from an offset that are not used to offset minor source growth will be creditable in the milestone compliance demonstrations required for serious areas.

TABLE 2. SIP SUBMITTAL REQUIREMENTS FOR MODERATE AND ABOVE OZONE NONATTAINMENT AREAS

1992	
Nov. 15	— Moderate and above ozone nonattainment areas must submit the following items for their 15 percent rate-of-progress plans: • Final 1990 base year inventory for VOC, NO_x, and CO. • 1990 rate-of-progress base year inventory for VOC, NO_x, and CO. • Initial 1990 adjusted base year inventory for VOC. • Documentation of how the 15 percent VOC reduction and 1996 target level of emissions were calculated. • Growth factors for developing projected rate-of-progress and modeling inventories. • Documentation of Act mandated control measures and associated control efficiencies. — Moderate and above ozone nonattainment areas must submit: • New source review (NSR) rules for VOC and NO_x. • VOC and NO_x RACT rules (committal SIP acceptable for NO_x for 1993 under certain circumstances). • Stage II vapor recovery programs. • Requirements for emission statement program (major sources of VOC and NO_x). — Serious and above ozone nonattainment areas must submit: • Enhanced I/M programs and begin implementation (committal SIP acceptable for 1993 implementation). • Optional clean fuel fleet substitute — Severe and extreme ozone nonattainment areas must submit: • Employer trip reduction programs. • Measures for reducing VMT. • Transportation control measures (TCM's).
1993	
Nov. 15	— Moderate ozone nonattainment areas not using the UAM must submit an attainment demonstration. — Moderate and above ozone nonattainment areas must submit their final 15 percent rate-of-progress plans including: • Final 1996 projected emission inventory for VOC, NO_x and CO. • Control measures that will achieve emission reductions needed to meet their 15 percent VOC emission reduction requirement. • Contingency measures for failures to meet their 1996 target level of emissions or failure to attain the ozone NAAQS.

TABLE 2. SIP SUBMITTAL REQUIREMENTS FOR MODERATE AND ABOVE OZONE NONATTAINMENT AREAS (Continued)

1994	
May 15	— Serious ozone nonattainment areas with a population greater than or equal to 250,000, and all severe and above ozone nonattainment areas must submit a clean fuel fleet vehicle program.
Nov. 15	— Moderate ozone nonattainment areas using UAM must submit an attainment demonstration. — Serious and above ozone nonattainment areas must submit the following items for their post-1996 rate-of-progress plans: • 1990 adjusted VOC base year inventory calculated for each applicable milestone and attainment year. • Projected inventory for applicable post-1996 milestone and attainment dates (e.g., projected 1999 inventory for serious ozone nonattainment areas). • Documentation of how the 3 percent per year VOC emission reduction and target level of emissions were calculated for each applicable milestone date. • Growth factors used in developing projected rate-of-progress and modeling inventories. • Final Technical Support Documentation (TSD) of mandated control measures and associated control efficiencies, plus discretionary controls needed for attainment. — Serious and above ozone nonattainment areas and interstate moderate nonattainment areas must submit an attainment demonstration based on UAM modeling, including control measures.
1995	
Nov. 15	— Moderate and above ozone nonattainment areas must submit a periodic inventory of VOC, NO_x, and CO emissions in 1993.[2]
1996	
Nov. 15	— Attainment date for moderate ozone nonattainment areas unless the area has requested and been granted an extension. — Milestone date for moderate and above ozone nonattainment areas to achieve the 15 percent VOC emission reduction requirement.
1997	
Feb. 15	— Serious and above ozone nonattainment areas must submit a milestone compliance demonstration showing compliance with the 15 percent VOC emission reduction requirement.
1998	
Nov. 15	— Moderate and above ozone nonattainment areas must submit periodic inventory of VOC, NO_x, and CO emissions in 1996.[3]

[2] EPA is currently considering the possibility of requiring the submittal of this periodic inventory by November 15, 1994.

[3] EPA is currently considering the possibility of requiring the submittal of this periodic inventory by November 15, 1997.

TABLE 2. SIP SUBMITTAL REQUIREMENTS FOR MODERATE AND ABOVE OZONE NONATTAINMENT AREAS (Continued)

1999	
Nov. 15	— Attainment date for serious ozone nonattainment areas, unless the area has requested and been granted an extension. — Milestone date for serious, severe, and extreme ozone nonattainment areas to achieve the 3 percent per year VOC emission reduction requirement.
2000	
Feb. 15	— Severe and extreme ozone nonattainment areas must submit a milestone compliance demonstration showing compliance with the 3 percent per year VOC emission reduction requirement.
2001	
Nov. 15	— Serious and above ozone nonattainment areas must submit periodic inventory of VOC, NO_x, and CO emissions in 1999.[4]
2002	
Nov. 15	— Milestone date for severe and extreme ozone nonattainment areas to achieve the 3 percent per year VOC emission reduction requirement.
2003	
Feb. 15	— Severe and extreme ozone nonattainment areas must submit a milestone compliance demonstration showing compliance with the 3 percent per year VOC emission reduction requirement.
2004	
Nov. 15	— Severe and extreme ozone nonattainment areas must submit periodic inventory of VOC, NO_x, and CO emissions in 2002.[5]
2005	
Nov. 15	— Attainment date for severe ozone nonattainment areas (except those with a 1986-1988 design value between 0.190 and 0.280 ppm) unless the area has requested and been granted an extension. — Milestone date for severe and extreme ozone nonattainment areas to achieve the 3 percent per year VOC emission reduction requirement.
2006	
Feb. 15	— Severe ozone nonattainment areas with a 1986-1988 design value between 0.190 and 0.280 ppm and extreme ozone nonattainment areas must submit a milestone compliance demonstration showing compliance with the 3 percent per year VOC emission reduction requirement.
2007	
Nov. 15	— For severe ozone nonattainment areas with a 1986-1988 design value between 0.190 and 0.280 ppm: • Milestone date. • Attainment date unless the area has requested and been granted an extension. — Severe and extreme ozone nonattainment areas must submit periodic inventory of VOC, NO_x, and CO emissions in 2005.[6]

[4] EPA is currently considering the possibility of requiring the submittal of this periodic inventory by November 15, 2000.

[5] EPA is currently considering the possibility of requiring the submittal of this periodic inventory by November 15, 2003.

TABLE 2. SIP SUBMITTAL REQUIREMENTS FOR MODERATE AND ABOVE OZONE NONATTAINMENT AREAS (Continued)

2008	
Nov. 15	Milestone date for extreme ozone nonattainment areas to achieve the 3 percent per year VOC emission reduction requirement.
2009	
Feb. 15	Extreme ozone nonattainment areas must submit a milestone compliance demonstration showing compliance with the 3 percent per year VOC emission reduction requirement.
2010	
Nov. 15	For extreme ozone nonattainment areas: • Milestone date. • Attainment date unless the area has requested and been granted an extension. • Submit periodic inventory for VOC, NO_x, and CO emissions in 2008.[7]

[6] **EPA is currently considering the possibility of requiring the submittal of this periodic inventory by November 15, 2006.**

[7] **EPA is currently considering the possibility of requiring the submittal of this periodic inventory by November 15, 2009.**

In addition, the Federally implemented program for reformulated gasoline is required in the nine nonattainment areas with the highest ozone design values during the 1987-1989 period and populations over 250,000. Emission reductions from the use of reformulated gasoline are also creditable toward the post-1996 rate-of-progress plan.

Because certain measures are expected to require significant levels of effort to develop, including large amounts of coordination between government agencies, States may have difficulty adopting all control measures in their final form by the required 1994 rate-of-progress plan deadline. The EPA will allow States to take credit for expected reductions from "long-term" measures in their post-1996 rate-of-progress plans only if: backstop measures of at least equivalent reductions have been adopted in the State's 1994 SIP, and such backstop measures will automatically go into effect if the long-term measures are not ready in time for their projected implementation date. Further discussion of long-term control measures is provided in section 5.7.

Severe Nonattainment Area Requirements

Under section 182(d) of the Act, severe nonattainment areas are subject to the control measures required for serious areas (except for emission offset requirements) as well as the following additional control measures.

- Measures to offset VMT growth.
- Employer trip reduction program.
- A major stationary source cut-off for RACT of 25 tpy VOC or NO_x.
- Emission offset ratio of 1.3 to 1 (or 1.2 to 1 if the State's plan requires all existing major sources in the nonattainment area to use the best available control technology for the control of VOC emissions).

As with serious nonattainment areas, EPA will not allow States with severe nonattainment areas to take credit for projected emission reductions resulting from emission offsets in their post-1996 rate-of-progress plans. However, any additional, actual, permanent, and enforceable emission reductions from an offset that are not used to offset minor source growth will be creditable in the milestone compliance demonstrations required for severe areas (i.e., in 1999, 2002, and for severe areas with a 1986-1988 ozone design value of 0.190 ppm up to, but not including, 0.280 ppm, 2005). All other post-1996 emission reductions that are real, permanent, and enforceable are creditable in the post-1996 rate-of-progress plan.

Extreme Nonattainment Area Requirements

Under section 182(e) of the Act, extreme ozone nonattainment areas are subject to the control measures required for severe areas (except for emission offset requirements) as well as the following additional control measures.

- Clean fuels or advanced control technology for specified boilers.
- A major stationary source cut-off for RACT of 10 tpy VOC or NO_x.
- Emission offset ratio of 1.5 to 1 (or 1.2 to 1 in the case where the State's plan requires all existing major sources in the nonattainment area to use the best available control technology to control VOC emissions).

As with severe nonattainment areas, EPA will not allow States with extreme nonattainment areas to take credit in their post-1996 rate-of-progress plans for projected emission reductions resulting from emission offsets. However, any additional, actual, permanent, and enforceable emission reductions resulting from an offset that is not used to offset minor source growth will be creditable in the milestone compliance demonstrations required for such areas (i.e., in 1999, 2002, 2005, and 2008). All other post-1996 emission reductions that are real, permanent, and enforceable are creditable in the post-1996 rate-of-progress plan.

5.2 Additional Control Measures

Reference 6 provides information with respect to stationary source controls including control technique guideline (CTG) and alternative control technique (ACT) documents, new source performance standards (NSPS), and national emission standards for hazardous air pollutants (NESHAP). The appendices of Reference 6 also provide references for and summarize the information contained in draft and final CTG and ACT documents, provide references for background information documents developed to support the technical basis for NSPS and NESHAP, and present other information sources that provide technical and cost information for alternative control technologies for VOC and NO_x source categories. Additionally, the State and Territorial Air Pollution Program Administrators and Association of Local Air Pollution Control Officials (STAPPA/ALAPCO) has developed a document titled Meeting the 15-Percent Rate-of-Progress Requirement Under the Clean Air Act, September 1993, that contains a comprehensive catalogue of control measures for VOC emission sources.

Sections 5.5 and 5.6 of Reference 6 discuss RE improvements and the quantification of RE improvement programs, respectively. The criteria for determining creditable emission reductions associated with RE improvements for the 15 percent VOC emission reduction requirement are also applicable for determining the creditability of emission reductions toward the post-1996 emission reduction requirement so long as emission reductions were not credited towards meeting the 15 percent VOC emission reduction requirement. State and local agencies should review the information in Reference 6 for determining the creditability of emission reductions associated with RE improvements in their post-1996 rate-of-progress plans. EPA has issued a new guideline on RE improvements (see reference 8).

Motor vehicle controls can be classified into measures that reduce per vehicle emissions or measures that reduce VMT, and thus overall emissions. The latter group of control measures are commonly classified as TCM's. The Act mandates a mix of national and area-specific motor vehicle control measures to reduce per vehicle emissions. National measures include the FMVCP and RVP limits for gasoline. The FMVCP includes evaporative/running loss controls and tailpipe/extended useful life standards. Area-specific measures include Stage II (service station vehicle refueling) controls, clean fuel fleet programs, the California general clean fuels program, reformulated gasoline,

and enhanced I/M. The TCM's attempt to decrease traffic congestion, especially during peak commuting hours, by providing alternatives to single-occupant vehicle use. Note that if the TCM's are not adopted measures a statement must be included in the plan that the State, local government, or regional agency enters into a commitment (enforceable to the extent allowed under enforcement provisions of the Act and applicable State law) to do the following: (a) implement and enforce the plan elements for which the State, local government, or regional agency is responsible under the SIP; (b) use, insofar as necessary, the resources identified in the SIP for carrying out those SIP elements; and (c) on the schedule specified in the SIP, apply for resources and legislative authority that are not yet available to the State, local government, or regional agency. The Office of Mobile Sources is currently developing additional guidance which will provide more detail on including TCM's in a SIP submittal.

Section 5 of Reference 6 provides an overview of all of these control measures and provides references for further information on the control measures. Reference 6 also discusses EPA's plans for controlling emissions from nonroad engines [e.g., heavy-duty nonroad (farm and construction) equipment, recreational boats, small farm and garden equipment, railroad engines, and construction equipment.]

It should be noted that the final post-1996 rate-of-progress plans must contain fully adopted measures in the control strategy submitted by November 15, 1994. However, after the November 15, 1994 post-1996 rate-of-progress plan submittal date, a State may choose to revise its SIP to replace existing control measures in its control strategy with newly promulgated Federal control measures.

Any control measures implemented in a nonattainment area that are the result of a pre-1990 Federal implementation plan are not creditable in the post-1996 rate-of-progress plan.

5.3 Emission Projections

States must include control measures in their post-1996 rate-of-progress plans to offset the emissions growth projected to occur after 1996. States will therefore need to project their emission inventories to estimate emissions growth for each milestone and attainment year. The projected inventories must reflect expected growth in activity, as well as regulatory actions which will affect emission levels. These projected inventories will be used to determine whether a control strategy is adequate to meet the rate-of-progress and attainment demonstration requirements.

Projections of emissions require consideration of several factors:

- Changes in activity at sources included in the base year inventory.
- Changes in the number of controlled sources and the levels of control for sources included in the base year inventory.
- Changes in the level of effectiveness of control measures [(RE)].
- Retirement of sources in the base year inventory.
- Addition of new sources and their levels of control (where known).

The EPA document entitled Guidance for Growth Factors, Projections and Control Strategies for the 15 Percent Rate-of- Progress Plan (see reference 6) provides guidance on how these concepts should be incorporated in projecting emissions for rate-of-progress and attainment demonstration purposes. The following provides additional details on the selection of appropriate growth factors for estimating emissions growth.

Growth Factors

Emission projections for point sources can be based on information obtained directly from facilities and/or permit applications; area and mobile source emission projections may be developed from information from local planning agencies. The EPA suggests that under the following circumstances, surveys of individual point sources be performed: (1) the industry is a dominant one in the region; (2) the industry's growth may not be captured in regional projections; or (3) it is expected that the industry will experience significant growth or decline in production (see reference 9). When information on a specific facility is not available and there are survey data on growth trends for other facilities in the same category, it may be possible to apply these trends to the facilities which were not surveyed (see reference 10). When information is not available from plants, permit applications, or local planning agencies, survey data can be extrapolated to all sources or forecasts. Source-specific information on expected future emissions-producing activity is rare for point sources and not available for area or mobile sources. In the absence of source-specific data, credible growth factors must be developed from accurate forecasts of economic variables and the activities associated with the variables.

When survey data are not available or it is not appropriate to extrapolate survey results to a source, economic variables may be used to project activity. Economic variables that may be used as indicators of activity growth are product output, value added, earnings, and employment. Product output is a measure of physical units of output by an industry, value added is the difference between the value of inputs to the production process and the values of the outputs of the process, earnings data capture wage earnings in an industry, and employment measures the number of persons employed in an industry. Emission projections guidance developed by EPA suggests that product output is the best indicator of activity growth and that its use is "preferable to any of the (other) indicators, if it is available" (see reference 3).

Economic data and models which provide acceptable growth factors for emission projections include the Bureau of Economic Analysis (BEA) forecasts for States and metropolitan statistical areas (MSA's); the Economic Growth Analysis System (E-GAS), which models economic growth and estimates corresponding increases in emissions-producing activity; and the Emissions Preprocessor System (EPS) for UAM, which produces spatially- and temporally-resolved emission inventories for input to UAM.

BEA Data

If emissions growth estimates are not available from individual plants or other local sources, use a surrogate growth indicator unless one of the previously stated circumstances exists. One EPA-approved source of economic data for projecting stationary sources is the U.S. Department of Commerce's BEA. Every 5 years, BEA publishes economic forecasts for MSA's, States, and regions in hard copy and disk format. The most recent economic forecasts released by BEA are summarized in the Bureau of Economic Analysis Regional Projections to 2040; Volumes I, II, and III (see

references 11, 12, 13) which contain forecasts of personal income, earnings, and employment data for the MSA's, States, regions, and the entire United States. The forecasts of interest for ozone modeling are the MSA- and State-level forecasts. The BEA economic forecast variables available for MSA's and States are presented in Table 3. For these data to be used to project source classification code (SCC)- and area source category code (ASC)-level activity, some type of matching, or Crosswalk, between economic categories and point and area sources, must be used. The E-GAS model and the EPS both contain Crosswalks. The EPS allows the user to enter BEA (or other) forecasts and uses this information to develop projected emission inventories for use by UAM; E-GAS develops economic growth factors internally and sends these factors to its Crosswalk, which produces SCC- and ASC-level growth factors. These growth factors can be used in rate-of-progress calculations or, with the addition of control measures, in UAM modeling.

As the information in Table 3 indicates, there is a trade-off between geographic and industrial disaggregation in the BEA data. The state-level forecasts are disaggregated into 65 categories, including over 20 industrial categories. The MSA-level forecasts are for 16 categories, and only three general industrial categories: total manufacturing, durable goods manufacturing, and nondurable goods manufacturing. The MSA-level data, however, are specific to each urban area and therefore should provide a better estimate of expected activity in the UAM modeling domains.

Economic Growth Analysis System (E-GAS)

The EPA's Air and Energy Engineering Research Laboratory (AEERL) developed E-GAS as an additional tool for use in projecting emission inventories. The E-GAS model provides activity growth for each SCC for each serious and above ozone nonattainment area in the United States. In addition, E-GAS provides SCC-level growth factors for multi-State moderate nonattainment areas, as well as the attainment portion of each State in the continental United States. The outputs from E-GAS provide one set of growth estimates that could be used by States for the 15 percent rate-of-progress plans, the post-1996 rate-of-progress plans, and as inputs to UAM.

The E-GAS model comprises three linked tiers. The first tier contains a national economic model developed by Regional Economic Models, Inc. (REMI) and national economic forecasts from the U.S. Bureau of Labor Statistics and Wharton Econometrics Forecasting Associates. Outputs from the first tier are used by the second tier, which houses REMI economic models of the multi-State moderate and serious and above nonattainment areas, as well as the attainment portions of States. The regional economic models produce forecasts of economic and demographic activity for each of the modeled areas. These forecasts are input to the third tier of E-GAS, which includes energy models for the residential, commercial, industrial, and utility sectors, as well as an industrial physical output module and a VMT forecasting module.

Outputs from the third tier include forecasts of various measures of emissions-producing activity including fossil fuel and electricity consumption, physical output for 210 sectors, and VMT. These forecasts of emissions-producing activity are sent to the E-GAS Crosswalk where each SCC in the aerometric information retrieval system (AIRS) is matched to the appropriate forecast. The E-GAS model produces forecasts of value added and, for some of the major VOC-producing categories, physical output.

Although the REMI models in E-GAS interact at the 1-digit SIC level, the models are able to estimate economic activity for 3- and 4-digit SIC's for both urban areas and the surrounding States.

TABLE 3. BEA PROJECTION CATEGORIES FOR METROPOLITAN STATISTICAL AREAS (MSA'S) AND STATES

MSA's
Farm
Agricultural services, forestry, fisheries, and other
Mining
Construction
Manufacturing
Nondurable goods manufacturing
Durable goods manufacturing
Transportation and public utilities
Wholesale trade
Retail trade
Finance, insurance, and real estate
Services
Government and government enterprises
States
Farm
Agricultural services, forestry, fisheries, and other
Agricultural services, forestry, and fisheries
Other
Mining
Coal mining
Oil and gas extraction
Metal mining
Nonmetallic minerals, except fuels
Construction
Manufacturing
Nondurable goods manufacturing
Food and kindred products
Tobacco manufacturers
Textile mill products
Apparel and other finished textile products
Paper and allied products
Printing and publishing
Chemical and allied products
Petroleum and coal products
Rubber and miscellaneous plastic products
Leather and leather products

TABLE 3. BEA PROJECTION CATEGORIES FOR METROPOLITAN STATISTICAL AREAS (MSA's) AND STATES (continued)

States
Manufacturing
Durable goods manufacturing
Lumber and wood products (except furniture and fixtures)
Furniture and fixtures
Stone, clay, and glass products
Primary metal industries
Fabricated metal products
Machinery, except electrical
Electric and electronic equipment
Transportation equipment, except motor vehicles
Motor vehicles and equipment
Instruments and related products
Miscellaneous manufacturing
Transportation and public utilities
Railroad transportation
Trucking and warehousing
Local, suburban, and highway passenger transportation
Air transportation
Pipeline transportation
Transportation services
Water transportation
Communication
Electric, gas, and sanitary services
Wholesale trade
Retail trade
Finance, insurance, and real estate
Banking
Other credit and securities agencies
Insurance
Real estate and combination offices
Services
Hotels and other lodging places
Personal, business, and miscellaneous repair services
Automotive repair, services, and garages
Amusement and recreation services
Motion pictures
Private households
Health services
Private education services
Nonprofit organizations
Miscellaneous professional services
Government and government enterprises
Federal, civilian
Federal, military
State and local

In addition, the REMI models are updated yearly, which allows the forecasts to be based on recent information on the economic structure and activity of the U.S. and its regional economies.

The EPA is not preferring or requiring the use of E-GAS. States are encouraged to incorporate the most accurate growth factors available into their projected inventories. E-GAS is another tool that can be used in this process. Documentation of the system was released in April 1993. (See references 14, 15.) Copies of the model software can be obtained from the Global Emissions and Control Division of AEERL.

EPA's Emissions Preprocessor System (EPS)

While the BEA data and E-GAS are tools that assist in the development of projection factors, the EPS is a tool that can be used to take those economic projections and calculate projection year emissions. If a State uses a preprocessor system other than EPS, it should be documented in its SIP. These projections can be for the post-1996 rate-of-progress requirement and also for the UAM modeling required for the attainment demonstrations. In order to run the UAM, an emission inventory which corresponds to a specific episode (defined by the day of the week, time of day, and meteorological conditions) must be developed. This inventory must be disaggregated spatially, temporally, and chemically as UAM develops estimates of ozone concentrations using hourly emission data, by chemical species, for each grid cell in the modeling domain. The inventories required by the Act include typical peak ozone day, county-level VOC, NO_x, and carbon monoxide (CO) emissions for 1990. The EPS serves to develop hourly emission rates from annual or daily emissions; emissions by grid cell from county emissions; nitrogen oxide (NO) and nitrogen dioxide (NO_2) emissions from NO_x inventories and speciated hydrocarbon emissions from VOC inventories. The EPS can be used to develop these inventories for 1990 or, using forecasts of various economic indicators such as population, VMT, and industrial sector activity, for a future year. Pre-1990 estimates can be developed in a similar fashion using backcasts of these economic indicators.

Based on the population, VMT, and industrial activity forecasts, EPS can develop a gridded, speciated, hourly emission inventory for a future episode for use by UAM. This inventory will reflect expected growth in activity, but will not account for changes in emissions due to controls, process changes, or other factors which would change the amount of emissions produced per unit activity. These changes can be identified by the user and input to EPS to run control scenario forecasts. These scenarios can be developed to examine potential or expected reductions in emissions from specific SCC's or more general source categories (e.g., fuel combustion, degreasing, dry cleaning, etc.).

5.4 Relationship Between the Post-1996 Rate-of-Progress Plans and Other Provisions of the Act

Reference 7 summarizes the regulatory programs required by the Act for controlling VOC and NO_x emissions. This guidance document also provides guidelines on the types of emission reductions that can be credited towards meeting the emission reduction requirements for the rate-of-progress plans. The criteria for determining creditable emission reductions for the 15 percent VOC emission reduction requirement are also applicable for determining the creditability of emission reductions toward the post-1996 rate-of-progress plan requirements so long as emission reductions were not credited towards meeting the 15 percent VOC emission reduction requirement. State and local

agencies should review the information in Reference 7 for determining the creditability of emission reductions in their post-1996 rate-of-progress plans.

Multiple Projection System (MPS)

The MPS is designed to facilitate the projection of future emissions of ozone precursors, specifically CO, VOCs, and NO_x, in any given geographic area. The MPS gives state/local air agencies a computer system capable of performing "what if scenario analysis" and reporting the final results (i.e., their rate-of-progress inventory) to EPA.

The system is capable of projecting emissions out to the year 2008 at intervals of 3 years. In addition to projecting emissions, the system can make projections in the form of percent reduction relative to base year emissions. The system is designed to accept input data from either the AIRS Facility Subsystem (AFS) or the Area and Mobile Source Subsystem (AMS). Output from the system is in the form of tables or graphs, which can be directed to the computer screen or to a printer. Tabular results can also be output to an ASCII file, allowing the user to subsequently import the reported information into other software for further analysis (either numeric or graphic). Data contained in the output file can also be exported to Lotus 123, dBaseIII, or Excel. As indicated above, the principal output types are batch transactions in AIRS FS and AMS format.

As was stated earlier, the purpose of the MPS is to facilitate the projection of future emissions of CO, VOC, and NO_x. To this end, the interactive mode of the MPS was created with the following basic capabilities:

: import emission data for 1990 and control efficiency, RE, rule penetration, and growth factor data for 1990 and later years;

: import 1990 activity level data, projected growth factors, and projected emission factor data for on-road mobile sources;

: accept user-specified criteria for selecting imported records;

: allow editing of imported control efficiency, RE, rule penetration, and growth factor data prior to projection of future emissions;

: project future emissions for the selected records based on these data;

: export projected emission data as DBaseIII, Lotus, and Excel files;

: generate tabular reports of projected emissions out to the year 2008;

: generate graphs depicting projected emissions out to the year 2008; and

: generate batch transaction files of projected emission data for import into AFS or AMS.

Necessary input from the user to the MPS may be apparent from this list. The user must provide files containing the 1990 emission data and the control efficiency, RE, rule penetration and growth factor data for future years. The projected growth factor file is generated by the E-GAS.

5.5 Economic Incentive Programs (EIP)

Section 182(g)(4)(B) of the Act requires EPA to promulgate rules for EIP's. A State with an extreme ozone nonattainment area must submit an EIP when it fails to submit a milestone compliance demonstration or to meet an applicable rate-of-progress milestone. Such programs are also identified as an explicit option upon such failures in serious and severe ozone nonattainment areas. Additionally, the Act explicitly allows the use of EIP's in the general SIP requirements [section 110(a)(2)], the general provisions for nonattainment area SIP's [section 172(c)(6)], and in the system of regulations for controlling emissions from consumer or commercial products [section 183(e)(4)].

On February 23, 1993, EPA proposed a rule for implementing EIP's (58 FR 11110). The proposed EIP rule serves as interim guidance for both mandated (statutory) and discretionary EIP's and addresses some of the general issues associated with the design and implementation of EIP's. Reference 7 presents EPA's interim guidance on the relationship between the 15 percent rate-of-progress plans and EIP's. Because the discussion provided in reference 7 is also relevant to the post-1996 plan, States should review the guidance provided in that document.

5.6 Contingency Measures

The Act requires that States with ozone nonattainment areas classified as moderate and above include contingency measures in their SIP's [sections 172(c)(9) and 182(c)(9)]. The contingency measures are the additional controls to be implemented in the event of a milestone or attainment failure. Section 172(c)(9) of the Act specifies the general requirements for nonattainment area SIP's to contain contingency measures that will take effect without further action by the State or EPA if an area either fails to make reasonable further progress or fails to attain the NAAQS by the applicable attainment date. Section 182(c)(9) requires SIP contingency measures for failure of serious and above areas to meet milestones. Plans to meet the 1996 milestone date are required as part of the 15 percent rate-of-progress submittal, due by November 15, 1993. Reference 6 presents background information on the development of contingency measures for the 15 percent rate-of-progress plan, which is also applicable to the post-1996 rate-or-progress plan.

All contingency measures must be fully adopted rules or measures but do not have to be implemented unless and until they are triggered by a failure to either meet a milestone or attain the NAAQS. EPA recognizes that many States are not accustomed to adopting rules that are not implemented immediately so the triggering of measures to be implemented at a later date may be a novel concept. The SIP should clearly state the trigger mechanisms, a schedule of the implementation of the measures, and an indication that the measures will be implemented with no further action by the State or EPA (e.g., a public hearing should take place before the SIP is submitted). Appendix B discusses the milestone and attainment failure process. Additional information specific to the development or implementation of contingency measures in the post-1996 timeframe is discussed below.

If a moderate or above nonattainment area receives a 1-year or two 1-year extensions of its attainment date, the contingency measures will not be required until the nonattainment area fails to attain the new attainment date. If a milestone compliance demonstration is required for a nonattainment area and the area fails to meet the milestone, then the contingency measures would be required to be implemented even if the nonattainment area were receiving an attainment date extension.

For the post-1996 rate-of-progress plan, some areas will be able to meet the contingency measures requirement by referencing the contingency measures identified in 15 percent rate-of-progress plan. The policy for States to include NO_x contingency measures in their 15 percent rate-of-progress plan that was due November 15, 1993 is outlined in "Guidance on Issues Related to the 15 Percent Rate-of-Progress Plans," Memorandum from Michael H. Shapiro, Acting Assistant Administrator for Air and Radiation to the Regional Division Directors, August 23, 1993. Contingency measures for the post-1996 rate-of-progress plan must not be inconsistent with the area's attainment demonstration. If a serious or above area fails to meet the 15 percent requirement and uses their contingency measures or a portion thereof, then the State can backfill those measures with all VOC, NO_x, or a combination of VOC and NO_x measures based upon the modeling analysis in that area. EPA finds this acceptable due to the fact that NO_x substitution for the 3 percent per year VOC reduction requirement is permitted for under the Act.

Additionally, areas that have implemented control measures from their overall SIP control strategy as a contingency measure or that have implemented any of their contingency measures listed in their 15 percent rate-of-progress plan must develop new measures to backfill the contingency plan and/or the control strategy. Within 1 year of the triggering of a contingency requiring the early implementation of control measures, the State must submit a SIP revision containing whatever additional provisions are needed to backfill the SIP to remedy any eventual shortfall that may occur as the result of the early use of the control measures. The EPA expects any control measures that are implemented early as part of a contingency plan will remain in place (or be superseded by replacement control measures) until the next milestone. At the next milestone, the State can demonstrate whether or not these control measures are needed to stay on track.

The EPA encourages the early implementation of required control measures and of contingency measures as a means of guarding against failures to meet a milestone or to attain. Any implemented measures (that are not needed for the rate-of-progress requirements or for the attainment demonstration) would need to be backfilled only to the extent they are used to meet a milestone. For purposes of an attainment failure, it would be impractical to require States to backfill the contingency measures when they have already fulfilled the contingency measure requirement for their classification. The State would be required to adopt new contingency measures as part of the process of developing their new SIP for their new classification. See "Early Implementation of Contingency Measures for Ozone and Carbon Monoxide (CO) Nonattainment Areas," Memorandum from G.T. Helms, Chief, Ozone/Carbon Monoxide Programs Branch, August 13, 1993.

For milestone failures, EPA only requires that contingency measures be implemented to compensate for the degree of failure. For example, a shortfall of 2 percent requires implementation of sufficient measures to make up for the 2 percent, and does not require that all contingency measures be implemented. General information on milestone and attainment failures is contained in Appendix B of this document. Additional information on the milestone compliance demonstration submittals and implications will be provided in a forthcoming rulemaking to be proposed in the spring of 1994. For an attainment failure, EPA will require that all contingency measures in the SIP be implemented.

States could adopt measures that are required for the next higher classification to fulfill their contingency measure requirement. The cutpoints for stationary or area sources could also be lowered for already-adopted measures in the control strategy. States should be aware that any rule or measure that meets the creditability requirements of section 182(b)(1)(C) and (D), that would achieve real,

permanent, enforceable reductions, and that is not already required, can be adopted as a contingency measure. In addition, please refer to "Clarification of Issues Regarding the Contingency Measures that are due November 15, 1993 for Moderate and Above Ozone Nonattainment Areas," Memorandum from D. Kent Berry, Acting director, Air Quality Management Division, November 8, 1993, for more information.

5.7 Long-Term Control Measures

It is anticipated that some serious and above ozone nonattainment areas will need significantly large emission reductions to achieve attainment by their attainment date. The EPA recognizes that it may be an unreasonable burden for such areas to identify, develop, and adopt in final form all of the control measures needed to demonstrate attainment in their post-1996 rate-of-progress plans, which must be submitted to EPA by November 15, 1994. The General Preamble for the Implementation of Title I of the Clean Air Act Amendments of 1990 (57 FR 13498) sets forth the requirements for the areas that may need additional time to fully develop and adopt certain "long-term" control measures that would be the preferred method to achieve attainment. The long-term control measures would include those that require complex analyses, decision making, and coordination among a number of governmental agencies. It is important to note that no measure that is specifically required by the Act (e.g., NO_x RACT controls) can be considered a "long-term" control measure.

The EPA intends to allow such areas reasonable time to complete full development and adoption of long-term control measures under the following conditions:

- The portion of the post-1996 rate-of-progress plan that contains the demonstration of attainment must identify each control measure for which additional time would be needed for full development and adoption.

- The plan must show that the long-term control measures cannot be fully developed and adopted by the submittal date for the attainment demonstration.

- The plan must contain an enforceable commitment (i.e., a commitment that has been subjected to hearing as part of the SIP) by the relevant agency that development and adoption will occur on an expeditious schedule to achieve specified emission reductions from each long-term control measure for each year through the attainment year.

- The plan must contain a "backstop" control measure for each long-term control measure that would be implemented to achieve equivalent emission reductions unless the long-term control measure is adopted and implemented on schedule.

- The long-term control measures must not be needed to meet any emission reduction requirements during the first 6 years after enactment (i.e., from November 15, 1990 through November 15, 1996).

- States must have enabling legislation adopted by November 15, 1994 that provides States with the authority to adopt any measures under consideration for the post-1996 rate-of-progress plan.

The backstop control measures must be fully adopted and included in the post-1996 rate-of-progress plan submittal and are in addition to the contingency measures that are required to address milestone and attainment failure. The backstop control measures must be designed to go into effect automatically on a schedule (which should be defined in the SIP submittal) sufficient to achieve all of the emission reductions associated with each long-term control measure for each year through the attainment year. The backstop control measures may represent broad, across-the-board emission reductions rather than thoroughly analyzed and developed control measures. For example, a declining emission cap (e.g., lbs/day, tpy) for all stationary sources above a certain size could be an appropriate backstop control measure.

Several States have expressed concern about the backstop measure requirement. However, EPA's legal counsel has advised that the only remedy to allow a State to include long-term measures in their post-1996 rate-of-progress plan is to require the backstop measures. The requirement for backstop control measures is set forth in the General Preamble for the Implementation of Title I of the Clean Air Act Amendments of 1990 (57 FR 13498). The rationale for this requirement is that the wording in the Act requires that States submit SIP measures to achieve emission targets and attainment within a certain timeframe. The adoption of backstop control measures helps to ensure that these will be achieved.

When each long-term control measure is fully developed and adopted, it must be submitted to EPA as a SIP revision. The revision would also propose deletion of the corresponding backstop control measure. The EPA's approval of each long-term control measure would also rescind each corresponding backstop control measure from the SIP. For this reason, EPA does not anticipate the actual implementation of backstop control measures in most cases because States will have ample opportunity to submit SIP revisions to incorporate fully developed and adopted long-term control measures and to delete the backstop control measures from the SIP. In addition, if a long-term control measure cannot be developed, then a State has the option of submitting a SIP revision to add a fully developed and adopted alternative control measure to replace the original long-term control measure prior to any necessary implementation of a backstop control measure.

Thus, a State may find that progress can be achieved with control measures that are fully developed, adopted, and included in its post-1996 rate-or-progress plan by November 15, 1994. However, the State may determine that expeditious attainment of the NAAQS is impossible unless its SIP also includes control measures which cannot be fully developed until after the November 15, 1994 submittal deadline. In its post-1996 rate-of-progress plan submittal, the State must clearly describe each of the long-term control measures and show that each measure cannot be fully developed and adopted until a specified future date, despite expeditious implementation efforts. The post-1996 rate-of-progress plan must include with each long-term control measure an enforceable schedule binding responsible agencies to achieve the identified emission reductions associated with implementation of each long-term control measure. Please note that the intention of long-term control measures are for aiding in attaining the NAAQS. EPA realizes, however, that in some circumstances long-term measures may be needed for the rate-of-progress requirements as well. Therefore, these measures (if all above requirements are followed) are creditable to the post-1996 rate-of-progress plan requirements as long as the appropriate amount of reductions are achieved by the milestone date.

5.8 New Technologies for Extreme Ozone Nonattainment Areas

In addition to the long-term measures option discussed in section 5.7 above, section 182(e)(5) of the Act permits the EPA to approve SIP's and attainment demonstrations for extreme ozone nonattainment areas which include control measures that anticipate the development of new control techniques or the improvement of existing technologies. In order to receive EPA approval, the State cannot use such measures to achieve the necessary emission reductions required during the 1990-2000 period and the State must submit enforceable commitments to develop and adopt contingency measures in case the anticipated technologies either were not developed or do not achieve the planned reductions. These contingency measures must be submitted to EPA no later than 3 years before the proposed implementation of the new technology measures, and must be approved by EPA in accordance with the requirements of section 110 of the Act. These contingency measures are in addition to the contingency measures required for the post-1996 rate-of-progress plan.

6.0 POST-1996 RATE-OF-PROGRESS PLAN AND ATTAINMENT DEMONSTRATION SUBMITTALS AND DOCUMENTATION

6.1 Post-1996 Rate-of-Progress and Attainment Demonstration Requirements

This section identifies the information and documentation that must be included in the November 15, 1994 rate-of-progress and attainment demonstration submittal. It also includes suggested formats for these submittals. The November 15, 1994 SIP submittals must include the following elements and documentation:

- 1990 adjusted base year inventory(ies).[8]
- VOC (and NO_x, where applicable) target level(s) for each milestone year and supporting calculations.
- Growth factors for developing projected rate-of-progress and attainment modeling inventories.
- Control measures and their associated control efficiencies.
- Projected milestone and attainment year inventories reflecting the adopted control strategy.
- Fully adopted post-1996 rate-of-progress plan, including attainment demonstration and any control measures needed to meet rate-of-progress or attainment demonstration requirements.[9]
- Modeling Documentation (see reference 4).

1990 Adjusted Base Year Inventory

Documentation of the adjusted base year inventory for each milestone year will take two distinct forms. The written documentation must include the expected emission reductions from the FMVCP and RVP program, as well as both actual 1990 motor vehicle emissions using 1990 VMT and MOBILE5a emission factors, and the adjusted emissions using 1990 VMT and the MOBILE5a emission factors calculated for each milestone/attainment year with the appropriate RVP for the

---

[8] Both the 1990 base year inventory and 1990 rate-of-progress base year inventories were calculated for the 15 percent rate-of-progress plan. If any adjustments are made to these inventories since they were submitted for the 15 percent plan, then these revised inventories will need to be submitted as part of the post-1996 rate-of-progress plan, with a full explanation of the changes and why they were made. If no changes were made, then the State should reference the previous inventories in the post-1996 rate-of-progress plan.

[9] See CFR Part 51.281 on adopted measures. See section 5.2 of this document for information on using TCM's that are not adopted measures for the rate-of-progress plan.

nonattainment area as mandated by EPA. States must provide EPA with the inputs to the MOBILE5a model used in calculating the expected emission reductions from the FMVCP and RVP program.

For purposes of the AIRS Area and Mobile Source Subsystem (AMS) adjusted base year submittal, States must provide the RVP inputs as required under the Act for the nonattainment area, and run the MOBILE5a model for 1999 and each subsequent milestone/attainment year vehicle mix (e.g., extreme areas run the model for 1999, 2002, 2005, 2008, and 2010). Because the calculation of the FMVCP and RVP program emission reductions requires separate runs of the MOBILE5a model, States will not submit the emission reductions from these programs directly into AIRS.

Other requirements for documentation and submittal of the adjusted base year inventory to AIRS are the same as those for the 1990 base year inventory. Requirements and guidance for documentation of the base year inventory are presented in Emission Inventory Requirements for Ozone State Implementation Plans (see reference 16), and Example Documentation Report for 1990 Base Year Ozone and Carbon Monoxide State Implementation Plan Emission Inventories (see reference 17.) States should realize that there will be no submittal of an "adjusted" point-source inventory for the AIRS facility subsystem (AFS) because point-source emissions are not altered in the calculation of the adjusted inventory from the rate-of-progress base year inventory. The point-source emissions for both the rate-of-progress and adjusted base year inventories can, therefore, be directly retrieved from the 1990 base year inventory. Stationary area-source emissions are not altered either. All adjustments apply to mobile source emissions. Base year and adjusted base year point source emissions are different because the base year inventory includes sources located outside of the nonattainment area boundaries. The AIRS has a flag to indicate which sources are within the designated nonattainment area boundaries and, therefore, can separate the point source emissions to develop these two different inventories.

Target Level(s) of Emissions

The target level(s) of emissions for each milestone and attainment year is the maximum amount of anthropogenic emissions within the nonattainment area that are permitted to occur in that year in order to comply with the rate-of-progress requirements. The EPA expects the States to document the target emission level(s) as well as the calculations made in determining the target level(s).

Control Measure and Growth Factor Information

Documentation for all of the control measures and their associated control efficiencies and RE factors for both the post-1996 rate-of-progress plan and the attainment demonstration must be submitted. See Table 1 in the EPA document entitled Guidance on the Adjusted Base Year Emissions Inventory and the 1996 Target for the 15 Percent Rate-of-Progress Plans (see reference 1) for a suggested computerized format. Table I also provides an example of growth factor documentation.

The control measure information consists primarily of a list of control measures and associated control efficiencies on a computer diskette file formatted as discussed above. For control measures that will be applied during modeling of attainment, control information must be reported for the entire modeling domain unless measures are specifically limited to the nonattainment area. Supplied control information for attainment year strategies will be used as input to the upcoming regional oxidant modeling (ROM) exercises to improve consistency between ROM and UAM results.

Also included should be the rule penetration (percentage of rule coverage) associated with new area-source control measures and any expected changes in RE for point or area sources. In addition to the data on spreadsheet, paper documentation should be provided describing the control measures, their implementation dates, assumptions made, and any further explanation needed for the information listed on the spreadsheet.

Milestone Year Projected Inventories

The milestone year projected inventories should reflect the adopted control strategy. All of the assumptions used to calculate these inventories (e.g., growth factors, control efficiencies) must be documented.

6.2 Multi-State Submittal Information

The officials in each State that are formally delegated the authority to submit SIP revisions to EPA should send, as part of their post-1996 rate-of-progress plan, a letter to the appropriate EPA Regional Administrator(s) stating that each State in the multi-State nonattainment area is submitting a multi-State post-1996 rate-of-progress plan. The letter should include the calculation of the original target for each State, percent reduction required for each State, and the new target level to achieve the total 3 percent per year VOC/NO_x emission reductions required for the nonattainment area. The original targets are calculated assuming that each State will meet the 3 percent per year requirement on its own. The sum of the new targets must equal the sum of the original targets.

Each State will be responsible for adopting and implementing control measures to meet its new target. No State will be responsible for the failure of another State meeting their target.

6.3 Mid-Course Corrections

The EPA recognizes that there are some uncertainties associated with the tools used to generate base year and projected emission inventories and to model the relationship between future VOC and NO_x emissions and ozone air quality. It is expected that, over the next few years, additional experience in running the current version of UAM and improved air quality monitoring systems will be available. In addition, anticipated improvements in emission inventory preparation methodologies will result in improved input to UAM.

For these reasons, States are encouraged to consider making mid-course corrections to their attainment demonstrations and rate-of-progress plans around 1997. This will allow States to take advantage of improved modeling techniques, air quality monitoring systems and emission inventories to refine their attainment strategies.

6.4 Suggested Submittal Tables

The following tables are the suggested submittal forms for a summary of the post-1996 rate-of-progress plan and the attainment demonstration. Table 5 is the recommended format for control strategy submittal. Table 6 contains information for all of the controls needed for the attainment demonstration. Table 7 suggests a format for the contingency measure submittal. Table 8 provides a format for explaining RE improvement measures. Tables 9 and 10 recommend a format for giving further details on all of the stationary source control measures.

TABLE 5. SUGGESTED FORMAT FOR POST-1996 RATE-OF-PROGRESS CONTROL STRATEGY SUMMARY SUBMITTAL

Control Measure	Creditable/ Noncreditable	Implementation Date	Expected VOC Emissions Reductions (lb/day)	Expected NO_x Emissions Reductions (lb/day)
STATIONARY SOURCE CONTROLS:				
TOTAL STATIONARY				
MOBILE SOURCE CONTROLS:				
	Noncreditable[15]			
	Creditable[16]			
	Creditable[17]			
TOTAL MOBILE:				
TOTAL				

15 All noncreditable mobile source measures should be listed individually but may be calculated in a single MOBILE5a run.

16 All creditable mobile source measures that are calculated through MOBILE5a should be listed individually but may be calculated in a single run.

17 Emission reductions from mobile source measures that are not calculated in MOBILE5a should be calculated and listed individually.

TABLE 6. SUGGESTED FORMAT FOR ATTAINMENT CONTROL STRATEGY SUMMARY SUBMITTAL

Control Measure	Implementation Date	Expected VOC Emissions Reductions (lb/day)	Expected NO_x Emissions Reductions (lb/day)
STATIONARY SOURCE CONTROLS:			
TOTAL STATIONARY			
MOBILE SOURCE CONTROLS:			
TOTAL MOBILE:			
TOTAL			

TABLE 7. SUGGESTED FORMAT FOR CONTINGENCY MEASURE SUBMITTAL

1990 VOC adjusted base year inventory: 5,200 lb/day
1990 NO_x adjusted base year inventory: 7,600 lb/day

IMPLEMENTATION ORDER	DESCRIPTION OF CONTROL MEASURE	EXPECTED VOC EMISSION REDUCTION (lb/day)	EXPECTED NO_x EMISSION REDUCTION (lb/day)	EMISSION REDUCTION AS A PERCENTAGE OF 1990 VOC ADJUSTED BASE YEAR INVENTORY	EMISSION REDUCTION AS A PERCENTAGE OF 1990 NO_x ADJUSTED BASE YEAR INVENTORY
1	Automobile emission tax	80	105	1.54	1.38
2	NO_x RACT w/ lower major stationary source cutoff (25 tpy for serious area)		30		0.39
3	Stage II vapor recovery for boats	25		0.48	
	TOTAL	105	135	2.02	1.77

TABLE 8. SUGGESTED FORMAT FOR SUBMITTAL OF RULE EFFECTIVENESS (RE) IMPROVEMENT MEASURES

RE IMPROVEMENT MEASURE	1990 RE (percent)	NEW RE (percent)	IMPLEMENTATION DATE	EXPECTED EMISSIONS REDUCTIONS (lb/day)
			TOTAL:	

TABLE 9. SUGGESTED FORMAT FOR SUBMITTAL OF STATIONARY SOURCE CONTROL MEASURES FOR THE POST-1996 RATE-OF-PROGRESS PLAN

CONTROL MEASURE	IMPLEMENTATION DATE	1990 CONTROL EFFICIENCY (percent)	NEW CONTROL EFFICIENCY (percent)	EXPECTED EMISSIONS REDUCTIONS (lb/day)
			TOTAL:	

TABLE 10. SUGGESTED FORMAT FOR SUBMITTAL OF STATIONARY SOURCE CONTROL MEASURES FOR THE ATTAINMENT DEMONSTRATION

CONTROL MEASURE	IMPLEMENTATION DATE	1990 CONTROL EFFICIENCY (percent)	NEW CONTROL EFFICIENCY (percent)	EXPECTED EMISSIONS REDUCTIONS (lb/day)
			TOTAL:	

REFERENCES

1. Guidance on the Adjusted Base Year Emissions Inventory and the 1996 Target for the 15 Percent Rate-of-Progress Plans, EPA-452/R-92-005, U.S. Environmental Protection Agency, OAQPS, Research Triangle Park, NC. October 1992.

2. User's Guide for the Urban Airshed Model, EPA-450/4-90-007 A-C, D(R), E-F, U.S. Environmental Protection Agency, OAQPS, Research Triangle Park, NC. 1990.

3. Guideline for Regulatory Application of the Urban Airshed Model, EPA-450/4-91-01, U.S. Environmental Protection Agency, OAQPS, Research Triangle Park, NC. 1991.

4. Guidance on Urban Airshed Model (UAM) Reporting Requirements for Attainment Demonstration, EPA-454/R-93-056, U.S. Environmental Protection Agency, OAQPS, Research Triangle Park, NC. January 1994.

5. Criteria for Assessing the Role of Transported Ozone/Precursors in Ozone Nonattainment Areas, EPA-450/4-91-015, U.S. Environmental Protection Agency, OAQPS, Research Triangle Park, NC. May 1991.

6. Guidance for Growth Factors, Projections, and Control Strategies for the 15 Percent Rate-of-Progress Plans, EPA-452/R-93-007. U.S. Environmental Protection Agency, OAQPS, Research Triangle Park, NC. March 1993.

7. Guidance on the Relationship Between the 15 Percent Rate-of-Progress Plans and Other Provisions of the Clean Air Act, EPA-452/R-93-007, U.S. Environmental Protection Agency, OAQPS, Research Triangle Park, NC. May 1993.

8. Rule Effectiveness Guidance; Integration of Inventory, Compliance, and Assessment Applications, EPA-454/4-94-001, U.S. Environmental Protection Agency, OAQPS, Research Triangle Park, NC. January 1994.

9. Procedures for Preparing Emissions Projections, EPA-450/4-91-019, U.S. Environmental Protection Agency, OAQPS, Research Triangle Park, NC. July 1991.

10. Procedures for the Preparation of Emission Inventories for Carbon Monoxide and Precursors of Ozone, Volume II: Emission Inventory Requirements for Photochemical Air Quality Simulation Models, EPA-450/4-91-014, U.S. Environmental Protection Agency, OAQPS, Research Triangle Park, NC. May 1991.

11. BEA Regional Projections to 2040, Volume I: States, U.S. Department of Commerce, Bureau of Economic Analysis, Washington, DC, U.S. Government Printing Office. October 1990.

12. BEA Regional Projections to 2040, Volume II: Metropolitan Statistical Areas, U.S. Department of Commerce, Bureau of Economic Analysis, Washington, DC, U.S. Government Printing Office. October 1990.

13. BEA Regional Projections to 2040, Volume III: BEA Economic Areas, U.S. Department of Commerce, Bureau of Economic Analysis, Washington, DC, U.S. Government Printing Office. October 1990.

14. Economic Growth Analysis System: Reference Manual, EPA-600/R-93-067a, U.S. Environmental Protection Agency, Office of Research and Development, Washington, DC. April 1993.

15. Economic Growth Analysis System: User's Guide, EPA-600/R-93-067b, U.S. Environmental Protection Agency, Office of Research and Development, Washington, DC. April 1993.

16. Emission Inventory Requirements for Ozone State Implementation Plans, EPA-450/4-91-010, U.S. Environmental Protection Agency, OAQPS, Research Triangle Park, NC. March 1991.

17. Example Documentation Report for 1990 Base Year Ozone and Carbon Monoxide State Implementation Plan Emission Inventories, EPA 450/4-92-007, U.S. Environmental Protection Agency, OAQPS, Research Triangle Park, NC. March 1992.

APPENDIX A: DEFINITIONS OF TERMS

This appendix provides the specific definitions of EPA terms that are used in this guidance document. Different EPA programs sometimes use different definitions of the same term (e.g., major source). The following definitions are presented for the purposes of this guidance document only; the reader is advised to refer to specific regulations, policies, and sections of the Act to obtain complete definitions for the program or title of interest.

The following terms are defined in Appendix A of the EPA document entitled Guidance for Growth Factors, Projections, and Control Strategies for the 15 Percent Rate-of-Progress Plans (see reference 6):

- Area Source.
- Attainment Demonstration.
- Attainment Determination.
- Basic Inspection and Maintenance.
- Major Stationary Source.
- Milestone Compliance Demonstration.
- 1990 Adjusted Base Year Inventory.
- 1990 Base Year Inventory.
- 1990 Rate-of-Progress Base Year Inventory.
- 1996 Target Level of Emissions.
- Peak Ozone Season.
- Point Source.
- Post-1996 Rate-of-Progress Plan.
- RACT "Catch-ups."
- RACT "Fix-ups."
- Rate-of-Progress Plan.
- Rule Effectiveness.
- Volatile Organic Compound.

The following terms are defined in Appendix A of the EPA document entitled Guidance on the Relationship Between the 15 Percent Rate-of-Progress Plans and Other Provisions of the Clean Air Act (see reference 7):

- Reclassification.
- Reformulated Gasoline.
- Reid Vapor Pressure.
- Stage II.
- Transportation Control Measures.

Backstop Measure Fully adopted control measure that achieves an annual emission reduction equivalent to those that would be achieved by the implementation of long-term control measures.

Economic Growth Analysis System (E-GAS) An EPA model for projecting emissions growth based on value-added and physical output data.

Economic Incentive Program A program which may include State established emission fees or a system of marketable permits, or a system of State fees based on the sale or manufacture of products the use of which contributes to ozone formation, or any combination of the foregoing or other similar measures, as well as incentives and requirements to reduce vehicle emissions and VMT in an area.

Emissions Preprocessor System (EPS) An EPA model for developing hourly emission rates from annual emissions, emissions by grid cell from county emissions, NO and NO_2 emissions from NO_x inventories, and speciated hydrocarbon emissions from VOC inventories.

Fleet Turnover Correction An adjustment made to the adjusted base year inventory in calculating the target level of emissions. This adjustment is computed for each milestone and attainment year to reflect the emission reductions associated with the pre-1990 FMVCP and RVP program as defined in 55 FR 23666, June 11, 1990.

Long-Term Control Measure A measure for controlling VOC and/or NO_x emissions that requires more time to develop and adopt than provided by the deadline for submittal of the post-1996 rate-of-progress plans (i.e., November 15, 1994). Each long-term measure requires a "backstop" control measure that will achieve equivalent emission reductions unless the long-term control measure is adopted and implemented on schedule.

New Technologies Control measures for extreme ozone nonattainment areas based on the development of new control techniques or the improvement of existing technologies for controlling VOC and/or NO_x emissions that require more time to develop than provided by the deadline for submittal of the post-1996 rate-of-progress plans (i.e., by November 15, 1994).

Projected Milestone Inventory An inventory of projected emissions that includes the effect of future control measures. A nonattainment area computes this inventory in its post-1996 rate-of-progress plan for each target year.

Target Year A year in which a nonattainment area must recalculate its adjusted base year inventory for the post-1996 rate-of-progress plan (e.g., target years for extreme areas are 1999, 2002, 2005, 2008, and 2010).

Target Level of Emissions The maximum amount of emissions that a nonattainment area can emit for a given target year while complying with the post-1996 rate-of-progress plan requirements.

Urban Airshed Model (UAM) An EPA-approved photochemical grid model for use in developing attainment demonstrations for nonattainment areas.

APPENDIX B: GENERAL IMPLICATIONS OF MILESTONE AND ATTAINMENT FAILURES

This appendix provides an overview of the implications of post-1996 milestone and attainment failures for serious, severe, and extreme ozone nonattainment areas. The specific requirements for milestone demonstrations and the consequences of failure to meet a milestone will be addressed in future rulemaking. Marginal and moderate ozone nonattainment areas are not discussed since they are required to attain by 1993 and 1996, respectively.[18] However, in the event that a moderate area does not attain by 1996, it may be reclassified to serious nonattainment status, and will be subject to the requirements for this higher classification. These requirements include the development of a plan to achieve the 1999 milestone emission reductions required for serious and above ozone nonattainment areas.

Serious Areas

Milestone Failures

Serious areas are required to demonstrate one milestone, the 1990-1996 15 percent VOC emission reduction requirement unless they apply for and receive at least one of the two available 1-year attainment date extensions under section 181(a)(5). Plans for this reduction must be outlined in the rate-of-progress plan, due by November 15, 1993. Serious areas must submit a milestone compliance demonstration within 90 days after the milestone date (i.e., by February 15, 1997). EPA will determine within 90 days whether or not the demonstration was adequate. If not, section 182(c)(9) requires that contingency measures go into effect automatically. In addition, States are required to elect one of three additional measures to implement if these contingency measures are not adequate to correct the failure. The elective options are:

- Bumping up to the next higher classification.
- Implementing additional contingency measures.
- Adopting an EIP that meets the requirements of section 182(g)(4).

This election must occur within 90 days of the milestone failure determination by EPA. If the State fails to make the election within the 90 days or 6 months thereafter, the area will be reclassified to the next higher classification by operation of law. Within 12 months after the date by which the State is required to elect an option, the State must submit a SIP revision that corrects the failure. The EPA has 9 months after the submittal date to review and approve or disapprove the revised SIP. Because the timeframe involved in making a State election, revising the SIP to reflect the election, and EPA approval of the SIP revision may take as long as 2.5 years, States with serious areas are strongly encouraged to implement control measures as soon as a milestone failure is deemed likely.

---

[18] Appendix H of the document entitled Guidance for Growth Factors, Projections, and Control Strategies for the 15 Percent Rate-of-Progress Plan, EPA-452/R-93-002, March 1993, describes the attainment failure implications for marginal and moderate areas.

area must implement contingency measures required under section 172(c)(9) and individual sources must pay the fees authorized by section 185.

"Bump-up" refers to the reclassification process that a marginal, moderate, or serious area automatically undergoes if it fails to attain the NAAQS. The term bump-up also applies to optional reclassification of a serious or severe nonattainment area as a result of milestone failure. Serious and severe nonattainment areas that fail to meet a milestone are required to make an election, under section 182(g)(3) of the Act, from three given measures identified on page B-1. One explicit option is reclassification of the area to the next higher classification.

Upon bump-up, the attainment date specified for the higher classification applies to the area that has been bumped-up. Section 182(i) of the Act allows EPA to establish due dates for the required submittals associated with the new classification, but does not allow EPA to adjust the attainment date. An early voluntary bump-up will allow the State more flexibility and time in planning for and achieving the new requirements of the higher classification. Since failure to submit approvable SIP revisions can result in sanctions or Federal implementation plan (FIP) measures, it will be in the best interests of areas to attempt to assess whether attainment is improbable as soon as possible.

Attainment Date Extensions

If a moderate or above nonattainment area receives a 1-year extension or two 1-year extensions of their attainment date, no additional rate-of-progress requirements are required during the time of the extension(s). Contingency measures are not required to be implemented during this time unless the nonattainment area failed to meet a required milestone. For purposes of section 172(c)(9), contingency measures would be required to be implemented when the area failed to attain the new attainment date. However, if a nonattainment area receives an extension, the area is required to perform a milestone compliance demonstration for the original attainment date year. Since the area is asking for an extension, the nonattainment area has not attained and therefore is required to do the milestone compliance demonstration.

Fee Provisions

Section 185 of the Act mandates that States with severe or extreme areas include provisions in their SIP's for the imposition of fees upon attainment failure. These provisions must require that each major stationary source of VOC emissions within the area pay a fee to the State as a penalty for failure to attain during the applicable attainment year, and must continue to pay a fee each calendar year until the area attains. These fees apply to sources of NO_x emissions as well if NO_x controls are used in the attainment demonstration.

The Act requires that these fees equal $5,000 per ton of VOC or NO_x emitted by a major stationary source during the calendar year in excess of 80 percent of the baseline amount. The fee will also be adjusted for inflation over time as specified in section 502(b)(3)(B)(v) of the Act. The baseline level of emissions for a source is determined as the lower of:

- The actual VOC or NO_x emissions.
- The emissions allowed according to the applicable permit or SIP.

If EPA determines that the fee provisions of a SIP do not meet the requirements in section 185, or the State is not administering the fee program as required in that section, EPA will collect the unpaid fees, including any interest computed in accordance with section 6621(a)(2) of the Internal Revenue Code of 1986.

Additionally, section 185 provides a fee exemption for areas with a population below 200,000 that can demonstrate that their failure to attain is due to ozone or precursors of ozone transported from other areas.

APPENDIX C: CHECKLISTS

The following checklists address required components of a State's post-1996 rate-of-progress plan. Questions in the checklist are stated in a way such that an affirmative answer to a yes-or-no question requires no further action or comment on behalf of the reviewer. A negative response does not necessarily invalidate the plan but usually will require an explanation by the State or, occasionally, will require a SIP revision.

These checklists are designed to assist States in preparing complete post-1996 rate-of-progress plans, and also to assist EPA in reviewing SIP's. States should not assume that these checklists are all-inclusive, however.

REVIEWING PROCEDURES

This section outlines the required steps to be taken by State agencies and Regional Offices in reviewing post-1996 rate-of-progress plans. The completeness criteria established for SIP's[19] and the timeframes allotted for revisions to the plans are discussed. The basic requirements for SIP's can be found in 40 CFR 51 Requirements for Preparation, Adoption, and Submittal of Implementation Plans. The specific requirements for post-1996 rate-of-progress plans are contained within this document.

State Agencies

State agencies have the responsibility of compiling the post-1996 rate-of-progress plan and to ensure that the plan meets the minimum completeness criteria (40 CFR Part 51, Appendix V). Once a plan has been adopted by a State, five copies of the plan are to be submitted by the Governor (or his/her designee) to the Regional Office of the EPA for review.

A State may want to submit a draft copy of the post-1996 rate-of-progress plan to EPA for comments prior to the November 15, 1994 deadline. This will provide an early opportunity for feedback on the plan. The EPA will not consider submission of requests for parallel processing of draft plans as official plans in order to meet statutory deadlines. The EPA interprets the Act as requiring rules that are acceptable under the approval options of section 110(k).

The EPA is presently amending the completeness criteria to remove the exception for parallel processing and to add an exception for the submission of commitments as allowed under section 110(k)(4).

Regional Offices

The first step in the review process for Regional Offices will be to determine if the post-1996 rate-of-progress plan meets the completeness criteria outlined in 40 CFR Part 51, Appendix V. The completeness criteria require that within 60 days of EPA's receipt of a plan or plan revision, but not later than 6 months after the date by which a State was required to submit the plan or plan revision, the EPA shall determine whether the completeness criteria have been met. If EPA has not made a

---

[19] 56 FR 42216, "State Implementation Plan Completeness Criteria; Final Rule." August 26, 1991.

completeness determination by 6 months after receipt of the submission, that submission shall on that date be considered to meet the completeness criteria. The completeness criteria require that EPA inform the submitting official by letter if the plan meets the requirements of Appendix V. If a submittal is deemed incomplete, EPA shall notify the State by letter that the submittal is incomplete. In the letter EPA will request corrective action and identify the components absent or insufficient to perform a review.

When it has been determined that the State's plan meets the minimum completeness criteria, EPA is required to approve, partially approve, or disapprove the submission within 12 months of the completeness determination.

ADJUSTED BASE YEAR INVENTORY(IES) AND TARGET LEVEL(S)

1. Was the MOBILE5a model used to estimate the noncreditable emission reductions from FMVCP and RVP?
   __Yes __No
   Comments: _____

2. Does the plan include information on how the MOBILE5a model was run for calculating the noncreditable emission reductions from FMVCP and RVP?
   __Yes __No
   Comments: _____

3. Was the 1990 adjusted base year inventory calculated for each applicable milestone and attainment year to reflect the effects of FMVCP and RVP due to fleet turnover (i.e., were noncreditable emission reductions from FMVCP and RVP excluded from each of the applicable adjusted base year inventories)?
   __Yes __No
   Comments: _____

4. Does the adjusted base year emission inventory include only anthropogenic emissions emanating from within the designated nonattainment area boundaries?
   __Yes __No
   Comments: _____

5. Does the plan document the target level(s) as well as the calculations made in determining the target level(s)?
   __Yes __No
   Comments: _____

REQUIRED TOTAL EMISSION REDUCTIONS

1. Does the plan demonstrate that it will achieve a 3 percent per year VOC emission reduction for each applicable milestone and attainment date?[20]
   __Yes __No
   Comments: _____

2. Is the required 3 percent per year VOC emission reduction calculated from the appropriate adjusted base year emission inventory?
   __Yes __No
   Comments: _____

3. If NO_x emission reductions are used in place of VOC emission reductions for the 3 percent per year requirement, is the substitution consistent with EPA's NO_x substitution guidance?
   __Yes __No
   Comments: _____

4. If the plan outlined a less than 3 percent per year VOC emission reduction, does the plan include all measures that can feasibly be implemented in the area in light of technological achievability (including measures that are achieved in practice by sources in the same source category in nonattainment areas of the next higher classification)? __Yes __No
   Comments: _____

5. Does the plan include a summary of projected VOC (and NO_x where appropriate) emission levels for each applicable milestone and attainment date?
   __Yes __No
   Comments: _____

6. Is the EPA guidance document entitled Procedures for Preparing Emissions Projections followed in calculating projected emissions?[21]
   __Yes __No
   Comments: _____

[20] The 3 percent per year emissions reduction is averaged over each 3 year period between consecutive milestone dates or the last milestone date and the attainment date.

[21] Procedures for Preparing Emissions Projections, EPA-450/4-019, U.S. Environmental Protection Agency, Office of Air Quality Planning and Standards, Research Triangle Park, NC. July 1991.

7. Does the control strategy contain the necessary control measures to achieve the target level of emissions for each applicable milestone and attainment year (i.e., does the overall control strategy provide for a 3 percent per year VOC emission reduction, account for noncreditable emission reductions, and fully offset any anticipated growth)?
__Yes __No
Comments: _____

_____

8. Were emission reductions from RACT and I/M corrections accounted for in the calculation of the target levels (this is not necessary for VOC if the reductions were accounted for in the 15 percent rate-of-progress plan)?
__Yes __No
Comments: _____

_____

9. If a State plans to use preenactment banked emission reduction credits in the post-1996 period, are the use of such banked credits considered as growth in the post-1996 plan?
__Yes __No
Comments: _____

_____

10. If emission reductions achieved in the 1990-1996 period are credited to the post-1996 plan, are they documented to be in excess of the emission reductions (net of growth) required for the 15 percent rate-of-progress plan?
__Yes __No
Comments: _____

_____

STATE IMPLEMENTATION PLAN ATTAINMENT DEMONSTRATION CHECKLIST FOR AREAS USING UAM

1. Was an approved modeling protocol completed and delivered to EPA prior to use of the model?
   __Yes __No
   Comments: _____

2. Are attainment year emission estimates projected from an EPA approved 1990 base year inventory?
   __Yes __No
   Comments: _____

3. Were allowable emissions used as the basis for future year projections?
   __Yes __No
   Comments: _____

4. Was the MOBILE5a model used for projecting mobile source emissions?
   __Yes __No
   Comments: _____

5. Have all MOBILE5a model inputs for the projection emission inventory been incorporated?
   __Yes __No
   Comments: _____

6. Were the assumptions used to simulate the effects of control measures (e.g., emission reductions and implementation dates) in the modeling analysis consistent with the assumptions used for the control measures specified in the 15 percent and post-1996 rate-of-progress plans to meet the target level of emissions for each applicable milestone date?
   __Yes __No
   Comments: _____

7. Was EPS2.0 used to process (including projection and control) the emission estimates for the attainment year?
   __Yes __No
   Comments: _____

8. Were the meteorology and air quality data preprocessed in accordance with EPA guidelines?
__Yes __No
Comments: _____

_____

9. Are emissions for the entire UAM modeling domain included (including biogenic emissions)?
__Yes __No
Comments: _____

_____

10. Are EPA-supplied numbers for background VOC and NO_x levels included in UAM to account for emissions from the surrounding area?
__Yes __No
Comments: _____

_____

11. Was the most recent regulatory version of the UAM used in the attainment demonstration and was it applied in accordance with EPA guideline procedures including the model evaluation specified in the document entitled Guideline for Regulatory Application of the Urban Airshed Model?[22]
__Yes __No
Comments: _____

_____

12. Was a modeling demonstration package prepared containing the required information as documented in EPA guidance?
__Yes __No
Comments: _____

_____

[22] Guideline for Regulatory Application of the Urban Airshed Model, EPA-450/4-91-01, U.S. Environmental Protection Agency, Office of Air Quality Planning and Standards, Research Triangle Park, NC. 1991.

CONTROL MEASURES AND CONTROL STRATEGIES

1. Does the plan describe the control measures to be implemented?
   __Yes __No
   Comments: _____

_____

2. Are all control measures required by the Act included in the plan?

Stationary Source Controls:

Serious and above ozone nonattainment areas:

a) RACT rule fix-ups (for those areas with RACT rule deficiencies): __Yes __No

b) RACT rule catch-ups: __Yes __No

Serious ozone nonattainment areas:

a) Major stationary source threshold of 50 tpy:

VOC __Yes __No

NO_x __Yes __No

b) New source review (NSR) offset ratio of 1.2 to 1:

VOC __Yes __No

NO_x __Yes __No

Severe ozone nonattainment areas:

a) Major stationary source threshold of 25 tpy:

VOC __Yes __No

NO_x __Yes __No

b) NSR offset ratio of 1.3 to 1:

VOC __Yes __No

NO_x __Yes __No

Extreme ozone nonattainment areas:

a) Major stationary source threshold of 10 tpy:

VOC __Yes __No

NO_x __Yes __No

b) NSR offset ratio of 1.5 to 1:

VOC __Yes __No

NO_x __Yes __No

c) Clean fuels or advanced control technology for specified boilers: __Yes __No

Ozone transport region:

a) Additional requirements deemed by the transport commission as appropriate: __Yes __No

Comments: _____

Mobile Source Controls

Serious and above ozone nonattainment areas:

a) FMVCP and RVP program: __Yes __No

b) Stage II vapor recovery program: __Yes __No

c) Enhanced I/M program: __Yes __No

d) Clean fuel fleet vehicle program (in areas with a population of 250,000 or greater) or: __Yes __No

Optional clean fuel fleet vehicle program substitute: __Yes __No

Severe and above ozone nonattainment areas:

a) TCM's to offset VMT growth: __Yes __No

b) Employer trip reduction program: __Yes __No

Ozone transport region:

a) Enhanced I/M program for any metropolitan statistical area with a population of 100,000 or more: __Yes __No

Comments: _____

3. Did the State identify the appropriate MOBILE5a model inputs?
__Yes __No
Comments: _____

4. Does the plan present a control strategy implementation schedule?
__Yes __No
Comments: _____

5. Will all control measures that are specified in the post-1996 rate-of-progress plan be implemented by the appropriate target year?
__Yes __No
Comments: _____

6. Is the implementation schedule consistent with the requirements of the Act?
__Yes __No
Comments: _____

7. Is the agency that will have enforcement authority specified for each control measure?
__Yes __No
Comments: _____

8. Are the measures adopted and copies of the rules submitted?
__Yes __No
Comments: _____

9. Does the plan describe the methods used to calculate the emission reductions attributed to each control measure? At a minimum, the methods should adhere to the four principles described in the General Preamble (57 FR 13567) for documenting emission reductions. The four principles are as follows: (1) baseline emissions from the source and the control measures must be quantifiable, (2) control measures must be enforceable, (3) interpretation of the control measures must be replicable, and (4) control measures must be accountable. See the General Preamble for further discussion of these principles.
__Yes __No
Comments: _____

_____

10. Are all major non-CTG stationary sources identified?
__Yes __No
Comments: _____

_____

11. Does the plan include RACT rules for major non-CTG stationary VOC sources for which CTG documents are not available?
__Yes __No
Comments: _____

_____

12. Is RE (and for area sources, rule penetration) factored into the calculation of expected emission reductions associated with new control measures?
__Yes __No
Comments: _____

_____

13. Is the 80 percent default RE used?
__Yes __No
Comments: _____

_____

14. Is the EPA guidance followed in calculating the expected emission reductions from any RE improvements?
__Yes __No
Comments: _____

_____

15. In estimating expected emission reductions associated with new control measures, is the compliance period (e.g., daily compliance) factored into the calculation consistent with EPA guidance?
__Yes __No
Comments: _____

_____

MILESTONE AND ATTAINMENT FAILURE CONTINGENCY MEASURES

1. Does the post-1996 rate-of-progress plan include contingency measures that will be automatically implemented in the event of a post-1996 milestone or attainment failure?
   __Yes __No
   Comments: _____

2. Will the contingency measures achieve a 3 percent per year VOC/NO_x emission reductions in addition to the emission reductions in the control strategy?
   __Yes __No
   Comments: _____

3. Are the contingency measures consistent with the attainment demonstration?
   __Yes __No
   Comments: _____

4. Do the contingency measures meet the minimum requirements for control measures set forth in the General Preamble (56 FR 13498)?
   __Yes __No
   Comments: _____

5. Does the post-1996 rate-of-progress plan ensure that contingency measures will be implemented with no additional rulemaking actions such as public hearings or legislative review by the State?
   __Yes __No
   Comments: _____

APPENDIX D: COMPILATION OF GUIDANCE MEMORANDA ON THE 15 PERCENT RATE-OF-PROGRESS REQUIREMENT

This appendix contains unsigned copies of the guidance memoranda that were issued concerning the 15 percent rate-of-progress requirement. Many of these are also relevant to the post-1996 requirements.

3/2/93

MEMORANDUM

SUBJECT: Correction to "Guidance on the Adjusted Base Year Emissions Inventory and the 1996 Target for the 15 Percent Rate of Progress Plans"

FROM: G.T. Helms, Chief
Ozone and Carbon Monoxide Programs Branch (MD-15)

TO: Air Branch Chief, Regions I-X

This memorandum corrects an error in the document entitled, "Guidance on the Adjusted Base Year Emissions Inventory and the 1996 Target for the 15 Percent Rate of Progress Plans" (EPA 452/R-92-005), which was released in October 1992. Section 2.3 of this document, Requirements of Section 182(b)(1)(A)(ii), states the following on page 17:

> Nonattainment areas can achieve less than the 15 percent required reductions under the following restrictive circumstances. The State must demonstrate that the area has a new source review program equivalent to the requirements in extreme areas [section 182(e)], except that "major source" must include any source that emits, or has the potential to emit, 5 tons per year (tpy) of VOC or NOx. Additionally, all major sources of VOC and NOx (down to 5 tpy) in the area must be required to have RACT-level controls.

The correction removes the references to NOx from this discussion for consistency with the Clean Air Act. Therefore, the corrected portion of the paragraph now reads ". . . potential to emit, 5 tons per year (tpy) of VOC. Additionally, all major sources of VOC (down to 5 tpy) . . . ."

Please share this information with your State and appropriate local air pollution control agencies. Any questions about this correction may be addressed to Kimber Scavo at (919) 541-3354.

3/11/93

MEMORANDUM

SUBJECT: 15 Percent Rate-of-Progress Plans

FROM: G.T. Helms, Chief
Ozone/Carbon Monoxide Programs Branch (MD-15)

TO: Air Branch Chief, Regions I-X

The purpose of this memorandum is to clarify an issue related to the 15 percent rate-of-progress plans. At least one Region has interpreted the statement that moderate areas are not required to demonstrate in 1997 that the 15 percent reduction in volatile organic compounds (VOC) has been achieved to mean that these areas do not have to submit a rate-of-progress plan by November 15, 1993. This interpretation is erroneous.

All areas classified as at least moderate must submit a plan demonstrating how a 15 percent reduction in VOC emissions (net of growth) will be achieved by 1996 unless the waiver provisions of section 182(b)(1)(A)(ii) are met. Section 182(g)(1), however, requires that "the State shall determine whether each nonattainment area (other than an area classified as marginal or moderate) has achieved a reduction in emissions during the preceding intervals equivalent to the total emission reductions required to be achieved by the end of such interval . . . ." In other words, moderate areas must submit a plan by November 15, 1993 showing how the 15 percent will be achieved, but will not be required to demonstrate in 1997 that the 15 percent was actually achieved.

The test for moderate areas will be whether they attained the standard because the attainment date for moderate areas coincides with the milestone demonstration date. Failure to attain will cause an area to be required to implement its contingency measures, and may cause the area to be bumped up to a higher classification. Also, failure of a moderate area to implement its 15 percent plan may result in a finding that the State failed to implement its State implementation plan, which would result in the imposition of sanctions.

Please make this information available to the appropriate State and local agencies in your Region. If you have any

questions concerning this issue, please contact Laurel Schultz at (919) 541-5511.

5/6/93

MEMORANDUM

SUBJECT: Credit Toward the 15 Percent Rate-of-Progress Reductions from Federal Measures

FROM: G.T. Helms, Chief
Ozone/Carbon Monoxide Programs Branch (MD-15)

Susan Wyatt, Chief
Chemicals and Petroleum Branch (MD-13)

TO: Air Branch Chief, Regions I-X

As you know, many States have been asking whether they will be able to take credit in their 15 percent rate-of-progress plans for reductions of volatile organic compounds (VOC) from federal measures and imminent control techniques guidelines. We have identified several categories for which we believe reductions will be achieved by 1996. The attached table lists these categories along with the amount of reductions for which States can take credit in the plans. Please share this information with the appropriate State and local agencies in your Region. If you have any questions, please contact Laurel Schultz at (919) 541-5511.

Attachment

New VOC Related Requirements

Category	Percent Reduction[23]
CTG's	
SOCMI Distillation	98% from each controlled vent
SOCMI Reactor Vents	98% from each controlled vent
National Rules	
TSDF Phase II	93% from 1990 baseline
NESHAP's	
Hazardous Organic NESHAP for SOCMI	5% from 1990 baseline
Ethylene Oxide Commercial Sterilizers	97% from each major source[24]

[23] The number in this column represents the percent reduction that EPA will allow States to assume for the purposes of the 15% plans only.

[24] The term "major source" is defined for hazardous air pollutants in section 112(a)(1) of the Clean Air Act.

6/14/93

MEMORANDUM

SUBJECT: Correction to "Guidance on the Adjusted Base Year Emissions Inventory and the 1996 Target for the 15 Percent Rate of Progress Plans"

FROM: G.T. Helms, Chief
Ozone and Carbon Monoxide Programs Branch (MD-15)

TO: Air Branch Chief, Regions I-X

This memorandum corrects an error in the document entitled "Guidance on the Adjusted Base Year Emissions Inventory and the 1996 Target for the 15 Percent Rate of Progress Plans" (EPA 452/R-92-005), which was released in October 1992. Appendix B of this document explains how to calculate the emissions reductions achieved through the correction of existing reasonably available control technology (RACT) rules. Two of the examples in this appendix incorrectly use growth factors in determining the reductions from rule corrections. As with the inspection and maintenance corrections and reductions from the Federal motor vehicle control plan and Reid vapor pressure, the RACT corrections should not include growth. A corrected version of Appendix B is attached. Because the adjustment for RACT corrections is relatively small, this correction should not have a significant impact on States' calculations.

Please share this information with your State and appropriate local air pollution control agencies. Any questions about this correction may be addressed to Laurel Schultz of my staff at (919) 541-5511.

Attachment

APPENDIX B:
CALCULATION OF EMISSIONS REDUCTIONS FROM RACT RULE CORRECTIONS

Section 4.1 of this document discusses cases where RACT rule corrections do not directly result in quantifiable emissions reductions. Any incidental reductions that occur in these cases may be handled as part of a rule effectiveness improvement. Corrections to RACT rules that may result in additional, enforceable, and quantifiable emissions reductions include situations where:

- A rule was missing [i.e., a State committed to develop a rule as part of its 1977 State implementation plan (SIP), or post-1982 SIP, but never carried through on the commitment prior to the Clean Air Act Amendments of 1990.
- The limit was wrong.
- A capture system is now required to ensure meeting a RACT limit.

For the case where a rule was missing, the State should first calculate the uncontrolled emissions in 1990. Next, the State must evaluate the expected emissions reduction in 1996 by calculating 1996 emissions (including controls) and subtracting this number from 1990 emissions. This total expected emissions reduction should be added to the total reductions in step 5 in the example in section 2.1 of this document. These reductions are not creditable toward the 15 percent volatile organic compounds (VOC) emissions reduction requirement.

For the second case, the State should first evaluate the pound (lb) VOC/gallon (gal) solids for each limit.

1990 limit = 3.5 lb VOC/gal coating

1) 1990 lb VOC/gal solids =

$$3.5 \frac{\text{lb VOC}}{\text{gal coating}} \times \frac{1 \text{ gal coating}}{7.36 \text{ lb VOC}} = 0.476 \frac{\text{gal VOC}}{\text{gal coating}}$$

2) Calculate solids in 1 gal coating:
   1 - 0.476 = 0.524 gal solids

3) Calculate gallons of coating needed to get gallon of solids:

$$\frac{1 \text{ gal coating}}{0.524 \text{ gal solids}} = \frac{1.908 \text{ gal coating}}{\text{gal solids}}$$

4) Convert 3.5 lb/gal coating to lb VOC/gal solids:

$$\frac{3.5 \text{ lb VOC}}{\text{gal coating}} \times \frac{1.908 \text{ gal coating}}{\text{gal solids}} = 6.678 \frac{\text{lb VOC}}{\text{gal solids}}$$

The 1996 limit will be 2.9 lb/gal.

Similarly, convert 2.9 lb VOC/gal coating to lb VOC/gal solids.

5) $$\frac{2.9 \text{ lb VOC}}{\text{gal coating}} \times \frac{1 \text{ gal VOC}}{7.36 \text{ lb VOC}} = 0.394 \frac{\text{gal VOC}}{\text{gal coating}}$$

6) Volume of solids in 1 gal coating:

$1 - 0.394 = 0.606$ gal solids

7) Calculate gallons of coating needed to get 1 gallon of solids:

$$\frac{1 \text{ gal coating}}{0.606 \text{ gal solids}} = 1.650 \frac{\text{gal coating}}{\text{gal solids}}$$

8) Convert 2.9 lb VOC gal coating to lb VOC/gal solids:

$$\frac{2.9 \text{ lb VOC}}{\text{gal coating}} \times \frac{1.650 \text{ gal coating}}{\text{gal solids}} = 4.785 \frac{\text{lb VOC}}{\text{gal solids}}$$

The facility uses 100 $\frac{\text{gal solids}}{\text{day}}$ in 1990

9) Compare 1990 and 1996 Emissions:

$$1990 = 6.678 \frac{\text{lbs VOC}}{\text{gal solids}} \times 100 \frac{\text{gal solids}}{\text{day}} = 667.8 \frac{\text{lbs VOC}}{\text{day}}$$

$$1996 = 4.785 \frac{\text{lb VOC}}{\text{gal solids}} \times 100 \frac{\text{gal solids}}{\text{day}} = 478.5 \frac{\text{lb VOC}}{\text{day}}$$

$$1990 \text{ Emissions} - 1996 \text{ Emissions} = 667.8 - 478.5 = 189.3 \frac{\text{lb VOC}}{\text{day}}$$

Therefore, 189.3 lb VOC/day are noncreditable.

For the third case where a capture system is required, expected emissions reductions should be calculated in the following way. First, uncontrolled emissions should be determined.

1990 Paper Coaters:

- Eighty percent of emissions coming out of the oven and vented to an incinerator of 98 percent demonstrated destruction efficiency.

- Twenty percent of emissions are fugitive from uncontrolled flash-off area.

Total uncontrolled emissions in 1990 =

1,000 lb/day if total is uncontrolled, however, when system is controlled, 80 percent of this is captured, and 98 percent of captured emissions are destroyed.

Therefore, emissions from the incinerator after control are 1,000 lb/day x (1-(0.80)) x (1-(0.98)) =

(1,000 lb/day) x (0.20) x (0.02) = 4 lb/day controlled. Total Emissions from incinerator + fugitives = 4 lb/day + (1,000 lb/day x (0.20)) = 204 lb/day

1996 Emissions:
New State rule now requires permanent total enclosure, so the controlled emissions are:

1,000 lb day (1.0) (0.02) = 20 lb/day

Noncreditable Emissions Reductions =
1990 Emissions - 1996 Emissions = 204 lb/day - 20 lb/day
184 lb/day

The preceding examples are not intended to be fully inclusive. States should evaluate all RACT rule corrections to determine if such measures result in real, enforceable, and permanent emissions reductions. If so, such reductions must be quantified and considered in the SIP development process when preparing the 1996 target level of emissions. If a State is unclear on how to calculate such reductions, then the State should consult with the Regional Office and Headquarters for guidance.

7/28/93

MEMORANDUM

SUBJECT: Correction Errata to the 15 Percent Rate-of-Progress Plan Guidance Series

FROM: G.T. Helms, Chief
Ozone and Carbon Monoxide Programs Branch (MD-15)

TO: Air Branch Chief, Regions I-X

This memorandum corrects several errors in the 15 percent rate-of-progress plan guidance series.

1. There is an error in the Table entitled, "Major Source Thresholds and Minimum Emissions Offset Ratio Requirements for Ozone Nonattainment Area Classifications," in the following 15 percent guidance documents:

- "Guidance on the Adjusted Base Year Emissions Inventory and the 1996 Target for the 15 Percent Rate of Progress Plans" (EPA-452/R-92-005), p. A-3.
- "Guidance for Growth Factors, Projections, and Control Strategies for the 15 Percent Rate-of-Progress Plans" (EPA-452/R-93-002), p. A-3.
- "Guidance on the Relationship Between the 15 Percent Rate-of-Progress Plans and Other Provisions of the Clean Air Act" (EPA-452/R-93-007), p. 12.
- "Guidance on Preparing Enforceable Regulations and Compliance Programs for the 15 Percent Rate-of-Progress Plans" (EPA-452/R-93-005), p. A-4.

The error is in the item, "All Other Nonattainment Areas, in an Ozone Transport Region." The volatile organic compounds tons per year (tpy) should be 50 tpy rather than 100 tpy.

2. The document entitled "Guidance on the Relationship Between the 15 Percent Rate-of-Progress Plans and Other Provisions of the Clean Air Act" (EPA-452/R-93-007), has an error concerning the creditability of certain transportation control

measures. Section 5.8 of this document states the following on page 39:

> Emissions reductions resulting from TCM's are creditable if the TCM is not already federally mandated (e.g., the employee trip reduction program required under section 182(d)(1)(B) for severe and extreme ozone nonattainment areas), or is not part of an already existing SIP. As with all other emissions reductions, emissions reductions associated with TCM's are only creditable to the 15 percent rate-of-progress plan if they are quantifiable, real, enforceable, replicable, accountable, and occur by November 15, 1996.

The correction revises the first sentence of the preceding paragraph:

> Emissions reductions resulting from TCM's are creditable if the TCM was not a pre-1990 control measure in an already existing SIP. As with all other emissions reductions, emissions reductions associated with TCM's are only creditable to the 15 percent rate-of-progress plan if they are quantifiable, real, enforceable, replicable, accountable, and occur by November 15, 1996.

3. In the document, "Guidance for Growth Factors, Projections, and Control Strategies for the 15 Percent Rate-of-Progress Plans" (EPA-452/R-93-002, March 1993), there are several errors in Chapter 6.

a. On page 55, the text under the table, last sentence, "The [(200-RE_{PY})/100] factor is not valid for low RE values" is incorrect and should be deleted.

b. On page 57, the sentence before the heading, "Equation 5 - Projection calculated from permitted emissions rates," ("The [(200 - RE)/100] factor is not valid for low RE values") is incorrect and should be deleted.

c. On page 57, the second and third paragraphs under the heading, "Equation 5 - Projection calculated from permitted emissions rates," should read as follows:

$$EMIS_{PY} = ER_{PY} * \left[\frac{\left[\frac{(200 - RE_{PY})}{100} \right]}{\left[\frac{(200 - RE_{BY})}{100} \right]} \right] * \left[\frac{EMIS_{BY,O}}{EMIS_{BY,Annual}} \right] \quad (5)$$

$$EMIS_{PY} = 30 * \left[\frac{\left[\frac{(200 - 80)}{100} \right]}{\left[\frac{(200 - 80)}{100} \right]} \right] * \left[\frac{0.075}{23} \right] = 0.098 \ tons/day = 196 \ lb/day$$

Please share this information with your State and local air pollution control agencies. Any questions about these corrections may be addressed to Kimber Scavo at (919) 541-3354 or Laurel Schultz at (919) 541-5511.

8/23/93

MEMORANDUM

SUBJECT: Guidance on Issues Related to 15 Percent Rate-of-Progress Plans

FROM: Michael H. Shapiro
Acting Assistant Administrator
for Air and Radiation (ANR-443)

TO: Director, Air Pesticides and Toxics Management Division, Regions I and IV
Director, Air and Waste Management Division, Region II
Director, Air, Radiation and Toxics Division, Region III
Director, Air and Radiation Division, Region V
Director, Air, Pesticides and Toxics Division, Region VI
Director, Air and Toxics Division, Regions VII, VIII, IX, and X

As you know, section 182(b)(1) of the Clean Air Act (Act) requires States to submit, by November 15, 1993 for all ozone nonattainment areas classified as moderate and above, a State implementation plan (SIP) that provides for a 15 percent reduction in emissions of volatile organic compounds (VOC) by November 15, 1996. The purpose of this memorandum is to provide guidance related to these SIP submissions.

Committal SIP's for 15 Percent Plan Control Measures

Several States asked to what extent will the Environmental Protection Agency (EPA) accept committal SIP's for the measures necessary to achieve the 15 percent reduction. Under section 110(k)(4) of the Act, EPA has the authority to conditionally approve a SIP submittal based on a commitment by the State to adopt specific enforceable measures by a date certain. A previous memorandum identified specific cases in which EPA would accept commitments for submittals which were due by November 15, 1992. For the 15 percent rate-of-progress plans, EPA will not accept commitments to adopt the measures needed to meet the 15

percent reduction requirement and any such plans would not be considered approvable. In fact, EPA may determine such submittals to be incomplete, which would trigger a findings letter starting the clock for mandatory sanctions. The only exception would be for the State of Texas where EPA Headquarters, based on initial views at the time, indicated a commitment would be acceptable.

NOx Substitution for Contingency Measures

Section 172(c)(9) of the Act requires moderate and above ozone nonattainment areas to adopt contingency measures by November 15, 1993. These measures would have to be implemented if the area fails to make reasonable further progress (RFP) or to attain the national ambient air quality standards (NAAQS) by the applicable attainment date. In addition, section 182(c)(9) of the Act requires serious and above areas to adopt contingency measures which would be implemented if the area fails to meet any applicable milestone. When triggered, the contingency measures must be implemented without further action by the State or the EPA.

The "General Preamble for the Implementation of Title I of the Clean Air Act Amendments of 1990" (57 FR 13498, April 16, 1992) requires that the contingency measures generally must provide reductions of 3 percent of the emissions from the adjusted base year inventory. The reductions must be achieved in the year following that in which the failure has been identified. Three percent represents 1 year's worth of reductions under the post-1996 rate-of-progress requirement.

The contingency measures that are required to be adopted by November 15, 1993 are for both failure to achieve RFP and failure to attain. While the contingency measures to address failure to achieve RFP must be for VOC, the contingency measures for failure to attain may be for VOC and/or NOx. Since these measures will be implemented after 1996, and because these measures serve two purposes (i.e., failure to achieve RFP and failure to attain), the contingency measures could provide for less than 3 percent in VOC reductions as long as some of the measures are for VOC and the area would have the difference (up to 3 percent) in NOx reductions. Based on discussions with EPA's Office of General Counsel, we have determined that States must adopt a minimum of 0.3 percent in VOC measures of the 3 percent contingency measure requirement to be legally defensible. Therefore, in an area that has demonstrated that NOx controls are needed for attainment, 2.7 percent of the required 3 percent could be NOx contingency measures; at least 0.3 percent must still be VOC to cover the contingency requirement for meeting RFP. Note that this applies to moderate areas as well; moderate areas must submit an approvable plan that shows how they will achieve the 15 percent

requirement but are not required to submit a demonstration that the milestone was achieved. Moderate areas, of course, must demonstrate that they have attained the NAAQS for ozone by November 15, 1996.

In order for NOx contingency measures to be acceptable, the State must adhere to EPA's forthcoming guidance on NOx substitution. In addition, States must show with modeling evidence that NOx reductions are needed in a particular nonattainment area. Therefore, in order to give States enough time to consult EPA's guidance on NOx substitution and to determine if NOx reductions are needed, EPA will accept committals for contingency measures that are due November 15, 1993. If the contingency measures themselves are not included with the November 15, 1993 submittal, that submittal must include a commitment, with schedule, for contingency measures to be adopted by November 15, 1994.

We believe that this is acceptable due to the fact that the earliest a contingency measure would be implemented would be in 1997. The first attainment date and milestone date for areas that are required to adopt contingency measures is November 15, 1996. The EPA will expect all actions needed to make the measures fully effective to occur within 60 days after EPA notifies the State of its milestone failure or within 6 months of its attainment failure. Therefore, the State would not need to implement the contingency measures until 1997 and EPA could accept measures that could not be implemented until 1997.

Upon activation of the contingency measures, reductions of up to 3 percent (or such lesser percentage that will cure the identified failure) must be achieved 1 year following the date on which the failure had been identified. The State must achieve these reductions while conducting additional control measure development and implementation as necessary to correct the shortfall if it is beyond the 3 percent the State would have already adopted. In determining what measures should be implemented if less than 3 percent reduction is needed to cure the failure, all VOC contingency measures should be required first followed by the appropriate percentage of NOx measures that will correct the shortfall.

15 Percent Waiver Provision

Under section 182(b)(1)(A)(ii), areas can submit plans demonstrating less than a 15 percent emission reduction if the following conditions are met. First, the State must demonstrate that the area has a new source review program equivalent to the requirement in extreme areas [section 182(e)], except that a "major source" must include any source that emits, or has the potential to emit, 5 tons per year (tpy) of VOC. Second, all

major sources (down to those with emissions of 5 tpy of VOC or greater) in the area must be required to have RACT-level controls. Third, the State must demonstrate that the SIP includes all measures (both stationary and mobile) that are achieved in practice by sources in the same source category in nonattainment areas of the next higher classification. Fourth, the plan must include all measures that can be feasibly implemented in the area, in light of technological achievability and cost.

If an area chooses to meet the requirements of section 182(b)(1)(A)(ii) to get a waiver of the 15 percent provision, EPA interprets title V to require operating permits for all VOC sources in that area that emit or have the potential to emit 5 tpy of VOC. This is because the definition of "major source" in title V expressly refers to "major stationary source" as defined in part D of title I. Since, under the waiver provision, "major stationary source" would be defined as having the potential to emit 5 tpy for the purposes of title I, this would become the definition of major source for the purposes of title V.

I suggest that you provide a copy of this memo to your affected State and local agencies. Inquiries may be directed to John Silvasi at (919) 541-5666.

9/20/93

MEMORANDUM

SUBJECT: Reclassification of Areas to Nonattainment and 15 Percent Rate-of-Progress Plans

FROM: John S. Seitz, Director
Office of Air Quality Planning and Standards (MD-10)

TO: Winston A. Smith, Director
Air, Pesticides and Toxics Management Division, Region IV

This is in response to your August 20, 1993 memorandum requesting guidance on the reclassification of areas to nonattainment and the 15 percent rate-of-progress plans. Your specific questions are addressed as follows:

1. If an attainment area becomes a moderate nonattainment area, what is the year of the baseline inventory? Will it be 1990 or some other year? If it is a year other than 1990, how will it be determined?

Answer: Section 181(b)(1) of the Clean Air Act (Act) covers areas that were attainment after enactment and that are redesignated to nonattainment. These areas are subject to the requirements under section 110 upon classification, except that any absolute, fixed date applicable in connection with any such requirement is extended by operation of law by a period equal to the length of time between the date of the enactment of the Act and the date the area is classified. Therefore, the base-year inventory year would be the year in which the area was redesignated to nonattainment.

2. Are there any regulatory programs that if adopted for nonattainment areas would be creditable toward the 15 percent requirement but if adopted prior to the nonattainment designation would not be creditable?

Answer: A regulatory program adopted for a nonattainment area that would be creditable toward the 15 percent requirement could be considered noncreditable for an area that was

redesignated to nonattainment if the regulatory program was adopted and implemented prior to the base-year inventory year in the redesignated area. Thus, the base-year inventory must reflect actual emissions including the effect of reductions occurring prior to that year. Only reductions that occur after the base year are creditable toward the 15 percent requirement [assuming that they meet the other creditability requirements of section 182(b)(1)(D)]. Also, if a regulatory program that met the creditability provisions was adopted and implemented prior to the base year but continued to result in emissions reductions after the base year, then those emissions reductions occurring after the base year would be creditable to the 15 percent requirement.

3. If a State implements nonregulatory/voluntary programs and is subsequently designated nonattainment for ozone, can the State use these programs to meet the 15 percent requirement by passing legislation and submitting a State implementation plan (SIP) revision?

Answer: The program would be creditable only if the reductions occur after the base year.

4. Can a State pass legislation lowering the Reid vapor pressure (RVP) of gasoline below the 9.0 allowed in attainment areas for purposes of maintaining the standard? If they can, what are the procedures that must be followed?

Answer: States are generally preempted under section 211(c)(4)(A) from establishing controls on the RVP of gasoline for purposes of motor vehicle emissions control unless the State RVP control is identical to the Federal requirement.[1] A State may, however, adopt and enforce a nonidentical RVP control if an applicable SIP so provides. The EPA may approve such a SIP provision only if the State RVP control is "necessary to achieve" the national ambient air quality standards (NAAQS) that the SIP implements.

The EPA has previously approved several State RVP controls where the State was able to show that an RVP control more stringent than the Federal requirement was necessary to achieve attainment for designated ozone nonattainment areas in that State [see, e.g., EPA's approval of a Maryland State RVP control

[1]The Federal RVP standards were promulgated under both section 211(c) and 211(h) of the Act. States are generally preempted under section 211(c)(4)(A) from establishing State fuel standards that are not identical to those established under section 211(c). California is not subject to this preemption pursuant to section 211(c)(4)(B).

published at 56 FR 23804 (May 24, 1991)]. That decision describes the criteria used by EPA in determining whether such a SIP revision is necessary to achieve the NAAQS.

For an area that is currently designated attainment, a State would generally have to demonstrate that the RVP measure is needed in the attainment area in order to achieve the standard in another area that is not in attainment. The EPA approved a SIP revision for statewide RVP controls in the State of New York based on such a showing. However, it is questionable whether EPA would have authority to approve a State RVP control adopted solely to maintain compliance with the NAAQS in attainment areas. If a State would like to pursue this latter issue, then we would work with the Office of General Counsel to determine under what conditions EPA could approve such a SIP submittal.

The process for obtaining a waiver of Federal preemption for State RVP controls involves submission by the State of a SIP revision in section 110 of the Act. The Federal Register notice referred to above provides detailed information on the criteria used by EPA in acting on such a SIP revision.

If you have any further questions or concerns, please give me a call.

10/6/93

MEMORANDUM

SUBJECT: Clarification of "Guidance for Growth Factors, Projections and Control Strategies for the 15 Percent Rate of Progress Plans"

FROM: G. T. Helms, Chief
Ozone/Carbon Monoxide Programs Branch (MD-15)

TO: Air Branch Chief, Regions I-X

This memorandum clarifies the document entitled, "Guidance for Growth Factors, Projections and Control Strategies for the 15 Percent Rate of Progress Plans," (EPA-452/R-93-002) which was released in March 1993. Section 6.5 of this document discusses the effects of equipment replacement and new source requirements on the 15 percent plans. However, this discussion, as it relates to new source review, is inconsistent with the document entitled, "Guidance on the Relationship Between the 15 Percent Rate-of-Progress Plans and Other Provisions of the Clean Air Act," (EPA-452/R-93-007) which was released in May 1993. As discussed in this document, emissions reductions projected to occur from the part D new source review offset requirements are not creditable toward the 15 percent rate-of-progress plan requirements. However, at the time of reconciliation, any additional, actual, permanent, and enforceable emissions occurring after 1990 resulting from offsets that are not used to offset minor source growth will be creditable in the milestone compliance demonstration due in February 1997 for serious and above areas. The EPA's Office of General Counsel concurs with this position.

A corrected version of section 6.5 of the growth factors document, which is consistent with the relationship document, is attached.

Please share this information with your State and appropriate local air pollution control agencies. Any questions about this correction may be addressed to Laurel Schultz of my staff at (919) 541-5511, or me at (919) 541-5527.

Attachment

6.5 Effects of Equipment Replacement

Failure to consider the effects of equipment replacement and NSPS requirements for an affected facility's existing capital stock, may result in development of a SIP which requires more emissions reductions than necessary to meet rate-of-progress milestones or NAAQS attainment dates.

As an existing facility wears out and is replaced with newer equipment, it may become subject to a NSPS. To the extent NSPS requirements are more restrictive than present requirements on the existing (not modified or reconstructed) facility, future emissions will be reduced. The implications of such emissions reductions can be assessed using the following formula:

$$Ert = [(Eb - En) * (1 + r) \exp t]$$

where:

Ert	=	Emissions reductions in year t
Eb	=	Emissions in the base year
En	=	NSPS emissions
r	=	Annual replacement rate for worn out capital stock
t	=	Years from the base year

Consequently, zero net growth emissions need not be the same as baseline; they might actually be less.

10/29/93

MEMORANDUM

SUBJECT: Rate-of-Progress Plan Guidance on the 15 Percent Calculations

FROM: D. Kent Berry, Acting Director
Air Quality Management Division (MD-15)

TO: Director, Air, Pesticides and Toxics Management Division, Regions I and IV
Director, Air and Waste Management Division, Region II
Director, Air, Radiation and Toxics Division, Region III
Director, Air and Radiation Division, Region V
Director, Air, Pesticides and Toxics Division, Region VI
Director, Air and Toxics Division, Regions VII, VIII, IX, and X

The Clean Air Act (Act) requires a specified rate of emissions reductions for all ozone areas classified as moderate and above. Moderate and above areas must submit a State implementation plan (SIP) revision detailing how the area will achieve a reduction in volatile organic compounds emissions of at least 15 percent between November 15, 1990 and November 15, 1996 (hereafter called the rate-of-progress plan). The rate-of-progress requirement is based on the 1990 base-year emissions inventory. The rate-of-progress plan revision is part of the full SIP (including an attainment demonstration based on modeling) for most moderate areas, and a separate submittal for serious and above areas (due November 15, 1993).

The Ozone/Carbon Monoxide Programs Branch coordinated the development of a series of guidance documents to guide States as they develop their SIP's to meet the new rate-of-progress requirements of section 182(b)(1). These documents were released between October 1992 and June 1993. In addition, Office of Air Quality Planning and Standards staff presented a satellite training workshop on the 15 percent rate-of-progress plans and

the attainment demonstrations in the spring of 1993. The guidance documents and the workshop explained the procedures for calculating the 15 percent requirement that was first put forth in the "General Preamble for the Implementation of Title I of the Clean Air Act Amendments of 1990," (57 FR 13498, April 16, 1992).

Several variations have been suggested for the calculation procedures of this requirement. One suggestion would allow States to offset only 15 percent of the growth rather than all of the growth. Another suggestion would take credit for the Federal motor vehicle control program as a means to achieve the total reductions necessary to meet the 15 percent requirement and offset growth.

Regarding the requirement to account for growth, the Environmental Protection Agency's (EPA's) interpretation of the Act ensures that actual reductions will occur if an area is to meet the 15 percent reduction requirement. Some of the alternative interpretation suggested could lead to a situation where, due to significant growth, an area's projected emissions--even after applying a 15 percent reduction--could be higher in 1996 than in 1990, but the area would still be considered as meeting the progress requirement. We do not believe this reflects the intent of the Act. States should, therefore, follow the guidance documents issued by EPA when developing their 15 percent rate-of-progress plans that are due November 15, 1993. Thus, we do not foresee allowing the variations such as those discussed above.

A second issue arises as a result of some confusion concerning the above-cited EPA guidance on 15 percent plans. The EPA intends to determine the approvability of the 15 percent rate-of-progress plans using four basic criteria: (1) the base-year inventory and associated projections must be appropriately justified; (2) the target level of emissions is properly calculated; (3) the target level of emissions will be achieved if the strategies adopted and identified in the plan are shown to successfully achieve the necessary level of reductions by the end of 1996; and (4) contingency measures of 3 percent (or a commitment to adopt such measures) are included. Some of the confusion associated with the guidance may come from the discussion of total required reductions. The best test of whether a 15 percent rate-of-progress plan will be acceptable is not whether a certain amount of reductions is achieved, but whether the projected emissions in 1996 will be at or below the target. The attachment to this memorandum explains specifically how these calculations are to be done.

Finally, there is apparently some confusion concerning the creditability of reductions due to the Federal motor vehicle control program (FMVCP). The Act states that emission reductions

from "[a]ny measures relating to motor vehicle exhaust or evaporative emissions promulgated by the Administrator by January 1, 1990" are not creditable toward the 15 percent requirement. This means that reductions due to the pre-1990 FMVCP standards are not creditable but that reductions due to any new standards promulgated after January 1,1990 are creditable.

We suggest that you forward this information to your State and local agencies. If you have questions or comments, please contact Kimber Scavo at (919) 541-3354 or Laurel Schultz at (919) 541-5511.

Attachment

ATTACHMENT

A specific question that has been raised is whether the 1996 projected emissions that are used to calculate the total required reductions (box "C" in the attached flowchart) should reflect the effects of the noncreditable Federal motor vehicle control program (FMVCP) and Reid vapor pressure (RVP) requirements. There are at least three approaches to this. All three approaches will result in the same answer if followed carefully. However, some may be easier than others depending on what work has already been done. Method 3 may be the simplest of the three because it does not require individual calculation of reductions associated with each mobile source measure. In all cases (including method 3), full documentation must be provided, including information on MOBILE5a input and vehicle miles travelled (VMT) used in the calculations.

States should also note that the test of the plan will be to determine whether the reductions from the measures listed below are greater than or equal to the "Reductions Needs by 1996 to Achieve 15 Percent Net of Growth" (box C - box D). Because of the possibility for errors in these reduction calculations, States should double-check their calculations by looking at whether the projected emissions for 1996, including growth and all of the controls expected to be in place, will be at or below the calculated 1996 target. If there is a discrepancy between the results calculated by comparing the projected 1996 inventory to the target and the results calculated above, it is likely that some of the reductions have been double-counted. The EPA intends to compare the 1996 projected inventory (that should be submitted with the documentation of the 15 percent rate-of-progress plan) to the target as the primary test of whether a State's plan demonstrates the required reduction.

1. Growth Projections without Control Projections

(a) The State can project the 1996 emissions as if the reductions from FMVCP and RVP will not occur. In other words, the "1996 Estimated Emissions (Anthropogenic)" is the "1990 Rate-of-Progress Base-Year Inventory" (box A) multiplied by the appropriate growth factors. The on-road mobile portion of this 1996 inventory is determined by multiplying the 1990 emission factors by the 1996 VMT. The "Reductions Needs by 1996 to Achieve 15 Percent Net of Growth" (box C - box D) will represent all of the reductions needed by 1996, including pre-enactment FMVCP and RVP that will occur anyway.

(b) The reductions that will count toward this total are as follows:

Pre-enactment FMVCP and RVP

I/M corrections
Tier 1 (post-1990 vehicle emission standards)
Enhanced I/M
Reformulated gasoline
RACT corrections
Reductions from any other stationary or mobile source measures

States should take care that the reductions are properly calculated. For example, the reductions associated with the pre-enactment FMVCP and RVP in this case are calculated as the difference between the product of box A times growth factors (i.e., 1990 emission factors times 1996 VMT) and 1996 projected emissions with no new Clean Air Act (Act) measures (1996 emission factors with NEWFLG=5 and Phase II RVP times 1996 VMT). Note that this is different than the calculation used to adjust the 1990 base-year inventory.

The reductions associated with Tier 1 standards are then calculated as the difference between 1996 emissions with no new Act measures (calculated in the previous step) and 1996 projected emissions with NEWFLG=1 and Phase II RVP. Reductions for other measures can then be calculated sequentially in the same manner (i.e., compare 1996 projected emissions with the new control measure in place to 1996 emissions without the new control measure in place but with all the previously calculated control measures in place).

2. Growth Projections with Federal Mobile Source Control Projections

(a) The State can project the 1996 emissions as if the reductions from FMVCP and RVP will occur, but no additional mobile or stationary source controls will be in effect. In this case, the "1996 Estimated Emissions (Anthropogenic)" is essentially the "1990 Adjusted Base-Year Inventory" multiplied by the appropriate growth factors. The on-road mobile portion of this 1996 inventory is determined by multiplying the 1996 emission factors (with NEWFLG=5, Tier 1 turned off, Phase II RVP on) by the 1996 VMT.

(b) The "Reductions Needs by 1996 to Achieve 15 Percent Net of Growth" (box C - box D) will represent all of the reductions needed by 1996, in addition to pre-enactment FMVCP and RVP that will occur anyway. The reductions that will count toward this total are as follows:

Tier 1 (post-1990 vehicle emission standards)
Enhanced I/M
Reformulated gasoline
I/M corrections

RACT corrections
Reductions from any other stationary or mobile source measures

3. Growth Projections with all Current Control Projections

(a) The State can project the 1996 emissions as if the reductions from FMVCP and RVP and any other mobile and stationary source controls, planned or in effect, will occur. In this case, the "1996 Estimated Emissions (Anthropogenic)" is essentially the "1990 Rate-of-Progress Base-Year Inventory" with the appropriate growth factors and controls applied. The on-road mobile portion of this 1996 inventory is determined by multiplying the 1996 emission factors (with NEWFLG=1, enhanced I/M, reform, and any other controls turned on) by the 1996 VMT.

(b) The "Reductions Needs by 1996 to Achieve 15 Percent Net of Growth" (box C - box D) will represent all of the additional reductions needed by 1996. The reductions that will count toward this total are as follows:

Reductions from any other stationary or mobile source measures.

11/8/93

MEMORANDUM

SUBJECT: Clarification of Issues Regarding the Contingency Measures that are due November 15, 1993 for Moderate and Above Ozone Nonattainment Areas

FROM: D. Kent Berry, Acting Director
Air Quality Management Division (MD-15)

TO: Director, Air Pesticides and Toxics Management Division, Regions I and IV
Director, Air and Waste Management Division, Region II
Director, Air, Radiation and Toxics Division, Region III
Director, Air and Radiation Division, Region V
Director, Air, Pesticides and Toxics Division, Region VI
Director, Air and Toxics Division, Regions VII, VIII, IX, and X

The August 23, 1993 memorandum "Guidance on Issues Related to 15 Percent Rate-of-Progress Plans," from Michael H. Shapiro, Acting Assistant Administrator for Air and Radiation, to you, set forth the policy on accepting nitrogen oxide (NOx) measures for a portion of the contingency measures that are due November 15, 1993, and for allowing committal State implementation plans (SIP's) for the contingency measure submittal. This memorandum provides additional clarification on a number of related issues that were raised after issuance of the August 23 memo.

NOx Reasonably Available Control Technology (RACT)

Section 172(c)(9) of the Clean Air Act (Act) states that moderate and above ozone nonattainment areas ". . . shall provide for the implementation of specific measures to be undertaken if the area fails to make reasonable further progress, or to attain the national ambient air quality standard."

In addition, section 182(c)(9) of the Act states that serious and above areas ". . . shall provide for the

implementation of specific measures to be undertaken if the area fails to meet any applicable milestone."

Because the Act says that specific measures must be undertaken if the area fails to meet a milestone, any measures that are already required in any ozone nonattainment area would not be creditable for the 3 percent contingency measure requirement.[1] Therefore, since NOx RACT is already a requirement, it would not be accepted as a contingency measure. The only exception would be the early implementation of required measures scheduled for implementation at a later date in the SIP. In this case, if an area then failed to meet a milestone which triggered the implementation of the contingency measures, the State would have 1 year to backfill the shortfall.

Note that measures that provide for emissions reductions beyond RACT would be creditable as contingency measures.

Control Techniques Guidelines (CTG's)

States may adopt, as a contingency measure, rules for categories where the Environmental Protection Agency (EPA) plans to issue a CTG. When EPA finally issues the CTG, however, the State will have to revise its SIP to ensure implementation of the RACT rule by a date certain. In other words, the rule can no longer be a "contingency measure" that is triggered by failure to attain or failure to meet reasonable further progress. The rule would thus have to be replaced with another contingency measure after EPA issues the CTG because of the rationale stated above. When a CTG is issued by EPA, States can consider moving a rule or measure from its 15 percent plan to its contingency plan and replacing the 15 percent rule or measure with the CTG rule. This type of transaction would require a SIP revision.

Maximum Available Control Technology (MACT), and Other Federal Rules

Any reductions that occur because of implementing MACT or any Federal rule are not creditable toward the contingency measure requirement because of the rationale stated above. States may, however, use as contingency measures rules for categories for which EPA plans in the future to issue Federal rules. Note that such contingency measures must be replaced when EPA finally issues the rule. As stated in the discussion of CTG's, a SIP revision would be required when a State replaces

[1]Note that an area may use as a contingency measure a rule or measure that is required for another pollutant (such as carbon monoxide) as long as it would provide reductions in volatile organic compounds (VOC) or NOx.

rules or measures in their 15 percent plan with the new MACT standard or Federal rule and moves the replaced rule or measure to its contingency plan.

Episodic Strategies

Section 123 of the Act states that an emissions limitation may not be affected by any dispersion technique, which includes "any intermittent or supplemental control of air pollutants varying with atmospheric conditions." According to EPA guidance documents,[2] by November 15, 1993, EPA expects the regulations or measures that are adopted for the 15 percent rate-of-progress plan to be fully adopted, real, permanent, quantifiable, and enforceable. Therefore, since episodic strategies do not result in real, permanent, quantifiable, and enforceable emission reductions, they will not be approvable for the contingency measure requirement, as well as the 15 percent plan requirement. The EPA's policy was set forth in, "Stack Height Regulation; Final Rule," 50 FR 27892, July 8, 1985.

Committal SIP's

If a State elects to submit in its SIP a commitment for the contingency measure requirement, it must include a commitment to adopt, by November 15, 1994, the measures or rules for the entire 3 percent required. The commitment must provide as much information as possible, but we recognize that in some cases it may be difficult to list the measures that an area is considering with a schedule because the area's modeling may not yet be complete. Completion of modeling may be necessary in cases where a State is considering NOx controls as part of the contingency measures. Therefore, EPA will accept such commitments without a list of specific measures, but the commitment should at least note the possible kinds of measures under consideration for NOx and VOC.

Please forward this information to your State and local agencies. Your staff may contact Kimber Scavo at (919) 541-3354 with questions.

[2]Two of which are: "General Preamble for the Implementation of Title I of the Clean Air Act Amendments of 1990," 57 FR 13498, April 16, 1992, and "Guidance for Growth Factors, Projections, and Control Strategies for the 15 Percent Rate-of-Progress Plans," EPA-452/R-93-002, March 1993.