EPA/600/R-07/133
November 2007

Arsenic Removal from Drinking Water by Adsorptive Media U.S. EPA Demonstration Project at Valley Vista, AZ Final Performance Evaluation Report

by

Julia M. Valigore
Abraham S.C. Chen
Lili Wang

Battelle
Columbus, OH 43201-2693

Contract No. 68-C-00-185
Task Order No. 0019

for

Thomas J. Sorg
Task Order Manager

Water Supply and Water Resources Division
National Risk Management Research Laboratory
Cincinnati, Ohio 45268

National Risk Management Research Laboratory
Office of Research and Development
U.S. Environmental Protection Agency
Cincinnati, Ohio 45268

DISCLAIMER

The work reported in this document is funded by the United States Environmental Protection Agency (EPA) under Task Order 0019 of Contract 68-C-00-185 to Battelle. It has been subjected to the Agency's peer and administrative reviews and has been approved for publication as an EPA document. Any opinions expressed in this paper are those of the author(s) and do not, necessarily, reflect the official positions and policies of the EPA. Any mention of products or trade names does not constitute recommendation for use by the EPA.

FOREWORD

The U.S. Environmental Protection Agency (EPA) is charged by Congress with protecting the Nation's land, air, and water resources. Under a mandate of national environmental laws, the Agency strives to formulate and implement actions leading to a compatible balance between human activities and the ability of natural systems to support and nurture life. To meet this mandate, EPA's research program is providing data and technical support for solving environmental problems today and building a science knowledge base necessary to manage our ecological resources wisely, understand how pollutants affect our health, and prevent or reduce environmental risks in the future.

The National Risk Management Research Laboratory (NRMRL) is the Agency's center for investigation of technological and management approaches for preventing and reducing risks from pollution that threaten human health and the environment. The focus of the Laboratory's research program is on methods and their cost-effectiveness for prevention and control of pollution to air, land, water, and subsurface resources; protection of water quality in public water systems; remediation of contaminated sites, sediments and ground water; prevention and control of indoor air pollution; and restoration of ecosystems. NRMRL collaborates with both public and private sector partners to foster technologies that reduce the cost of compliance and to anticipate emerging problems. NRMRL's research provides solutions to environmental problems by: developing and promoting technologies that protect and improve the environment; advancing scientific and engineering information to support regulatory and policy decisions; and providing the technical support and information transfer to ensure implementation of environmental regulations and strategies at the national, state, and community levels.

This publication has been produced as part of the Laboratory's strategic long-term research plan. It is published and made available by EPA's Office of Research and Development to assist the user community and to link researchers with their clients.

Sally Gutierrez, Director
National Risk Management Research Laboratory

ABSTRACT

This report documents the activities performed during and the results obtained from the arsenic removal treatment technology demonstration project at an Arizona Water Company (AWC) facility in Sedona, AZ, commonly referred to as Valley Vista. The objectives of the project were to evaluate 1) the effectiveness of Kinetico's FA-236-AS treatment system in removing arsenic to meet the maximum contaminant level (MCL) of 10 μg/L, 2) the reliability of the treatment system for use at small water facilities, 3) the required system operation and maintenance (O&M) and operator skill levels, and 4) the capital and O&M cost of the technology. The project also characterized water in the distribution system and residuals generated by the treatment process. The types of data collected included system operation, water quality, process residuals, and capital and O&M cost.

After engineering plan review and approval by the state and county drinking water officials, the treatment system was installed in May 2004 and became operational on June 24, 2004. The system consisted of two 36-in-diameter, 72-in-tall fiberglass tanks in series (lead/lag), each containing 16.7 to 22 ft^3 of adsorptive media. The media types evaluated included AAFS50 (an iron-modified activated alumina medium manufactured by Alcan) for Media Runs 1, 2, 2a, and 3 and ARM 200 (an iron oxide/hydroxide medium manufactured by Engelhard/BASF) for Media Run 4. The system was designed to treat 37 gal/min (gpm) of flow using 22 ft^3 of media per tank, which corresponded to an empty bed contact time (EBCT) of 4.5 min/tank and 9.0 min for both tanks. Due, in part, to the use of an incorrect AAFS50 media density and, thus, shipment weight, 16.7 ft^3 of AAFS50 media was inadvertently loaded into each tank for Media Runs 1 and 2a, resulting in a shorter EBCT of 3.5 min/tank.

Source water contained 23.5 to 49.8 μg/L of total arsenic, with As(V) being the predominating species, averaging 39.7 μg/L. Prechlorination, although not required for oxidation, was initiated one month after system startup to inhibit biological growth in the adsorption tanks and to provide residual chlorine in the distribution system. The treatment system operated for 24 hr/day during Media Runs 1, 2, 2a, and 4, and 16 hr/day during Media Run 3 with less than 1% downtime for repairs and media replacement. Concentrations of iron, manganese, silica, orthophosphate, and other ions in source water did not appear to impact arsenic removal by the media.

After treating 8,240 bed volumes (BV) of water during Media Run 1 based on 33.4 ft^3 of media in the lead and lag tanks, the system effluent exceeded the 10-μg/L arsenic MCL. Source water pH, with values ranging from 7.5 to 8.4 and averaging 7.7, was then adjusted to approximately 6.9 using 37 to 50% sulfuric acid (H_2SO_4) at the end of Media Run 1 and throughout Media Runs 2 and 2a. Lowering the pH values, beginning on September 17, 2004, reduced the arsenic concentrations after both tanks, but not to the desired level of 10 μg/L.

After media changeout of both tanks on October 25, 2004, Media Run 2 began with virgin AAFS50 media. pH adjustment increased the AAFS50 media run length to 23,030 BV at 10-μg/L arsenic breakthrough in the system effluent based on 44 ft^3 of media in the lead and lag tanks. Due to the increased media capacity, it was economical to rebed only the lead tank at this time and continue utilizing the remaining capacity of the lag tank after it was switched to the lead position. Thus, Media Run 2a began on April 29, 2005. Operational problems associated with system programming resulted in the tanks returning to their default positions following power outages. The system programming was later corrected by the vendor to allow the tanks to remain in their current positions following any power interruptions.

Media Run 3, which commenced on October 12, 2005, evaluated the use of AAFS50 media again under the unaltered pH condition, but with an intermittent run time of 16 hr/day and longer EBCT than Media

Run 1 (i.e., 4.6 instead of 3.5 min/tank). Under these conditions, 10-μg/L arsenic breakthrough in the system effluent occurred at approximately 10,360 BV based on 44 ft^3 of media in the lead and lag tanks.

Media Run 4 began on March 7, 2006, with ARM 200 media, unaltered pH, and 24 hr/day operation after media changeout of both tanks. The system effluent reached 10 μg/L of arsenic at 25,720 BV based on 44 ft^3 of media in the lead and lag tanks. The treatment system was shut down on September 18, 2006, due to the conclusion of the demonstration study and well maintenance by AWC.

Comparison of the distribution system sampling results before and after the commencement of system operation showed a decrease in the average arsenic concentration at three locations (i.e., from 39.2 to 44.5 μg/L to 8.7 to 27.4 μg/L). Arsenic levels were reduced most prominently at the location closest to the treatment system and that received water most representative of the system effluent. Arsenic concentrations at the other two locations were much higher than those of the treatment effluent, presumably due to blending with other untreated wells supplying the distribution system. Similarly, alkalinity and pH values were reduced at the nearby location during pH adjustment, but they fluctuated widely at the other two locations. The lead, copper, manganese, iron, and aluminum concentrations at the three sampling locations did not appear to be significantly impacted by the arsenic treatment system.

Treatment system residuals included spent media and backwash water. All spent media including 9,100 lb of AAFS50 media and 2,200 lb of ARM 200 media passed EPA Toxicity Characteristic Leaching Procedure (TCLP) tests and could be disposed of as non-hazardous wastes at solid waste landfills. Backwash of the filter media was manually initiated monthly using treated water for 20 min/tank at 27 to 36 gpm (or 4 to 5 gpm/ft^2) for AAFS50 media and for 15 min/tank at 34 to 42 gpm (or 5 to 6 gpm/ft^2) for ARM 200 media. No significant pressure buildup was observed during the service runs. Backwash water from the lead tank generally contained higher concentrations of all analytes than the lag tank most likely because it removed the majority of the particulates from source water. A piping loop and a recycling tank enabled the system to recycle nearly 100% of the wastewater produced during normal system operation at a maximum flowrate of 3.6 gpm.

The capital investment cost of the system was $228,309 consisting of $122,544 for equipment, $50,659 for site engineering, and $55,106 for installation. Using the system's rated capacity of 37 gpm (or 53,280 gal/day [gpd]), the capital cost was $6,171/gpm (or $4.29/gpd). The capital cost also was converted to an annualized cost of $21,550/yr based on a 7% interest rate and a 20-yr return period. During the first year, the system produced 18,750,000 gal of water, so the unit capital cost was $1.15/1,000 gal. The capital cost does not include the cost of the enclosure to house the treatment system.

The O&M cost for the treatment system included cost for media replacement and disposal, chemical supply, incremental electricity consumption, and labor. Representing the majority of the O&M cost, the media replacement and disposal cost depended on the operating conditions affecting the media run length, the number of tanks to be changed out when the system effluent reached 10 μg/L of arsenic, and labor and material cost. Due to the short duration of using AAFS50 without pH adjustment, it might be more cost-effective to replace the media in both lead and lag tanks when the system effluent reached 10 μg/L of arsenic. System operations using AAFS50 with pH adjustment and ARM 200 without pH adjustment were able to last about three times longer, so it was sensible to replace the media of only the lead tank when the system effluent reached 10 μg/L of arsenic. The combined chemical supply, electricity, and labor cost was $0.19/1,000 gal without pH adjustment and $0.91/1,000 gal with pH adjustment. The total O&M cost for AAFS50 media without pH adjustment and rebedding both tanks at the same time was $2.74/1,000 gal. The total O&M cost for rebedding one tank at a time was $1.49 or $1.79/1,000 gal using AAFS50 with pH adjustment or ARM 200 without pH adjustment, respectively.

CONTENTS

DISCLAIMER ii
FOREWORD iii
ABSTRACT iv
FIGURES vii
TABLES viii
ABBREVIATIONS AND ACRONYMS ix
ACKNOWLEDGMENTS xii

Section 1.0 INTRODUCTION 1
1.1 Background 1
1.2 Treatment Technologies for Arsenic Removal 1
1.3 Project Objectives 2

Section 2.0 SUMMARY AND CONCLUSIONS 3

Section 3.0 MATERIALS AND METHODS 5
3.1 General Project Approach 5
3.2 System O&M and Cost Data Collection 6
3.3 Sample Collection Procedures and Schedules 7
3.3.1 Source Water 7
3.3.2 Treatment Plant Water 7
3.3.3 Backwash Water 7
3.3.4 Distribution System Water 10
3.3.5 Residual Solids 10
3.4 Sampling Logistics 10
3.4.1 Preparation of Arsenic Speciation Kits 10
3.4.2 Preparation of Sampling Coolers 10
3.4.3 Sample Shipping and Handling 11
3.5 Analytical Procedures 11

Section 4.0 RESULTS AND DISCUSSION 12
4.1 Facility Description 12
4.1.1 Source Water Quality 12
4.1.2 Distribution System 13
4.2 Treatment Process Description 15
4.3 System Installation 19
4.3.1 Permitting 19
4.3.2 System Installation, Shakedown, and Startup 20
4.3.3 System Enclosure 20
4.4 System Operation 21
4.4.1 Operational Parameters 21
4.4.2 pH Adjustment 23
4.4.3 Backwash 23
4.4.4 Tank Switching 24
4.4.5 Media Loading and Removal 26
4.4.5.1 Media Run 1 26
4.4.5.2 Media Runs 2 and 2a 26
4.4.5.3 Media Run 3 26
4.4.5.4 Media Run 4 27

4.4.6 Residual Management 28
4.4.7 Reliability and Simplicity of Operation 28
4.4.7.1 Pre- and Post-Treatment Requirements 28
4.4.7.2 System Automation 28
4.4.7.3 Operator Skill Requirements 29
4.4.7.4 Preventative Maintenance 29
4.4.7.5 Chemical/Media Handling and Inventory Requirements 29
4.5 System Performance 29
4.5.1 Treatment Plant Sampling 29
4.5.1.1 Arsenic 30
4.5.1.2 Iron, Manganese, and Aluminum 35
4.5.1.3 Alkalinity, Sulfate, and pH 36
4.5.1.4 Silica 36
4.5.1.5 DO, ORP, and Chlorine 36
4.5.1.6 Other Water Quality Parameters 36
4.5.2 Backwash Water Sampling 36
4.5.3 Distribution System Water Sampling 40
4.5.4 Spent Media Sampling 40
4.5.4.1 TCLP 40
4.5.4.2 Arsenic 40
4.5.4.3 Other Metals 43
4.6 System Cost 44
4.6.1 Capital Cost 44
4.6.2 O&M Cost 44

Section 5.0 REFERENCES 48

FIGURES

Figure 3-1. Process Flow Diagram and Sampling Locations 9
Figure 4-1. Predemonstration Site Conditions 12
Figure 4-2. Existing Chlorine Injection System 13
Figure 4-3. Schematic of Kinetico's FA-236-AS Treatment System 17
Figure 4-4. Kinetico's FA-236-AS Treatment System on Concrete Pad 17
Figure 4-5. Treatment Process Components 19
Figure 4-6. Backwash Process Components 20
Figure 4-7. Sun Shed (Top) and Completed Enclosure (Bottom) 21
Figure 4-8. Water Flow Paths and Sample Tap Locations with Tank A (Top) and Tank B (Bottom) in the Lead Position 25
Figure 4-9. Media Run 4 Changeout Photographs 27
Figure 4-10a-d. Total Arsenic Concentrations Through Treatment System During Media Runs 1 to 4 33
Figure 4-11. Comparison of Media Run Lengths 34
Figure 4-12. Relationship Between pH and Surface Charge of Media 35
Figure 4-13. Alkalinity, Sulfate, and pH Values During Media Runs 1 and 2 37
Figure 4-14. Silica Concentrations During Media Runs 1 and 2 38
Figure 4-15. Total O&M Cost Including Media Replacement 47

TABLES

Table 1-1. Summary of the Round 1 Arsenic Removal Demonstration Sites 2
Table 3-1. Predemonstration Study Activities and Completion Dates 5
Table 3-2. Evaluation Objectives and Supporting Data Collection Activities 6
Table 3-3. Sampling Schedule and Analyses 8
Table 4-1. POE Well No. 2 Water Quality Data 14
Table 4-2. Distribution System Water Quality Data 15
Table 4-3. Properties of AAFS50 and ARM 200 Media 16
Table 4-4. Design Features for Kinetico's FA-236-AS Treatment System 18
Table 4-5. Kinetico's FA-236-AS Treatment System Operations 22
Table 4-6. Backwash Summary of Kinetico's FA-236-AS Treatment System 24
Table 4-7. Media Loading, Removal, and Freeboard Measurements 27
Table 4-8. Summary of Arsenic, Iron, Manganese, and Aluminum Results for Media Runs 1, 2, 3, and 4 30
Table 4-9. Summary of Other Water Quality Parameter Results for Media Runs 1, 2, 3, and 4 31
Table 4-10. Actions Taken for pH Adjustment During Media Runs 1 and 2 34
Table 4-11. Theoretical Calculation of Acid Consumption for pH Adjustment 38
Table 4-12. Backwash Water Sampling Results 39
Table 4-13. Distribution System Sampling Results 41
Table 4-14. TCLP Results of Spent Media 42
Table 4-15. Metals' Analysis of Spent Media 42
Table 4-16. Media Run Conditions Affecting Arsenic Loading 43
Table 4-17. Summary of Arsenic Removal Capacity of Media 43
Table 4-18. Capital Investment for Kinetico's Treatment System 45
Table 4-19. Summary of O&M Cost 46

ABBREVIATIONS AND ACRONYMS

ΔP	differential pressure
AA	activated alumina
AAL	American Analytical Laboratories
ADEQ	Arizona Department of Environmental Quality
Ag	silver
Al	aluminum
AM	adsorptive media
AOC	Approval of Construction
As	arsenic
ATC	Approval to Construct
AWC	Arizona Water Company
Ba	barium
bgs	below ground surface
BV	bed volume(s)
Ca	calcium
CCR	Consumer Confidence Report
Cd	cadmium
C/F	coagulation/filtration
Cl	chlorine
Cr	chromium
CRF	capital recovery factor
Cu	copper
DO	dissolved oxygen
EBCT	empty bed contact time
EPA	U.S. Environmental Protection Agency
F	fluoride
Fe	iron
GFH	granular ferric hydroxide
GFO	granular ferric oxide
gpd	gallons per day
gph	gallons per hour
gpm	gallons per minute
Hg	mercury
Hp	horsepower
H_2SO_4	sulfuric acid
ICP-MS	inductively coupled plasma-mass spectrometry
ID	identification
IX	ion exchange
kwh	kilowatt-hour(s)

LCR	(EPA) Lead and Copper Rule
MCL	maximum contaminant level
MDL	method detection limit
MDWCA	Mutual Domestic Water Consumers Association
Mg	magnesium
µm	micrometer
Mn	manganese
Mo	molybdenum
mph	miles per hour
mV	millivolts
Na	sodium
NA	not applicable
NaOCl	sodium hypochlorite
ND	not detected
NS	not sampled
NSF	NSF International
NTU	nephlemetric turbidity units
O&M	operation and maintenance
OIP	operator interface panel
ORD	Office of Research and Development
ORP	oxidation-reduction potential
P&ID	process and instrumentation diagram
Pb	lead
pCi/L	picocuries per liter
PLC	programmable logic controller
PO_4	orthophosphate
POE	point-of-entry
psi	pounds per square inch
PVC	polyvinyl chloride
QA	quality assurance
QA/QC	quality assurance/quality control
QAPP	Quality Assurance Project Plan
RPD	relative percent difference
RSSCT	rapid small scale column test
Sb	antimony
SDWA	Safe Drinking Water Act
Se	selenium
SiO_2	silica
SM	system modification
SMCL	secondary maximum contaminant level
SO_4	sulfate
STMGID	South Truckee Meadows General Improvement District
STS	Severn Trent Services

TCLP	Toxicity Characteristic Leaching Procedure
TDS	total dissolved solids
TOC	total organic carbon
TSS	total suspended solids
UPS	uninterruptible power supply
V	vanadium
WRWC	White Rock Water Company
zpc	zero point of charge

ACKNOWLEDGMENTS

The authors wish to extend their sincere appreciation to Arizona Water Company (AWC) in Phoenix and Sedona, Arizona. This performance evaluation would not have been possible without AWC's support and dedication. The primary operator, Mr. Paul Blanchard, monitored the treatment system and collected samples from the treatment and distribution systems on a regular schedule throughout this reporting period.

Section 1.0 INTRODUCTION

1.1 Background

The Safe Drinking Water Act (SDWA) mandates that U.S. Environmental Protection Agency (EPA) identify and regulate drinking water contaminants that may have adverse human health effects and that are known or anticipated to occur in public water supply systems. In 1975 under the SDWA, EPA established a maximum contaminant level (MCL) for arsenic at 0.05 mg/L. Amended in 1996, the SDWA required that EPA develop an arsenic research strategy and publish a proposal to revise the arsenic MCL by January 2000. On January 18, 2001, EPA finalized the arsenic MCL at 0.01 mg/L (EPA, 2001). In order to clarify the implementation of the original rule, EPA revised the rule text on March 25, 2003, to express the MCL as 0.010 mg/L (10 µg/L) (EPA, 2003). The final rule specified a compliance deadline of January 23, 2006, for all community and non-transient, non-community water supplies.

In October 2001, EPA announced an initiative for additional research and development of cost-effective technologies to help small community water systems (<10,000 customers) meet the new arsenic standard and to provide technical assistance to operators of small systems in order to reduce compliance costs. As part of this Arsenic Rule Implementation Research Program, EPA's Office of Research and Development (ORD) proposed a project to conduct a series of full-scale, on-site demonstrations of arsenic removal technologies, process modifications, and engineering approaches applicable to small systems. Shortly thereafter, an announcement was published in the *Federal Register* requesting water utilities interested in participating in Round 1 of this EPA-sponsored demonstration program to provide information on their water systems. In June 2002, EPA selected 17 out of 115 sites to host the demonstration studies. The Arizona Water Company (AWC) water system in Sedona, AZ, commonly referred to as Valley Vista, was selected as one of the 17 Round 1 host sites for the demonstration program.

In September 2002, EPA solicited proposals from engineering firms and vendors for cost-effective arsenic removal treatment technologies for the 17 host sites. EPA received 70 technical proposals for the 17 host sites, with each site receiving from one to six proposals. In April 2003, an independent technical panel reviewed the proposals and provided its recommendations to EPA on the technologies that it determined were acceptable for the demonstration at each site. Because of funding limitations and other technical reasons, only 12 of the 17 sites were selected for the demonstration project. Using the information provided by the review panel, EPA, in cooperation with the host sites and the drinking water programs of the respective states, selected one technical proposal for each site. Kinetico's adsorptive media process was selected for the Valley Vista facility.

1.2 Treatment Technologies for Arsenic Removal

The technologies selected for the 12 Round 1 EPA arsenic removal demonstration host sites included nine adsorptive media systems, one anion exchange system, one coagulation/filtration system, and one process modification with iron addition. Table 1-1 summarizes the locations, technologies, vendors, and key source water quality parameters of the 12 demonstration sites. An overview of the technology selection and system design (Wang et al., 2004) and the associated capital costs for each site (Chen et al., 2004) are provided on the EPA website (http://www.epa.gov/ORD/NRMRL/wswrd/dw/arsenic/index.html). As of August 2007, all of the systems have been operational, and 10 performance evaluations have been completed.

Table 1-1. Summary of the Round 1 Arsenic Removal Demonstration Sites

Demonstration Site	Technology (Media)	Vendor	Design Flowrate (gpm)	Source Water Quality		
				As (µg/L)	Fe (µg/L)	pH
WRWC, NH	AM (G2)	ADI	70[a]	39	<25	7.7
Rollinsford, NH	AM (E33)	AdEdge	100	36[b]	46	8.2
Queen Anne's County, MD	AM (E33)	STS	300	19[b]	270[c]	7.3
Brown City, MI	AM (E33)	STS	640	14[b]	127[c]	7.3
Climax, MN	C/F (Macrolite)	Kinetico	140	39[b]	546[c]	7.4
Lidgerwood, ND	SM	Kinetico	250	146[b]	1,325[c]	7.2
Desert Sands MDWCA, NM	AM (E33)	STS	320	23[b]	39	7.7
Nambe Pueblo, NM	AM (E33)	AdEdge	145	33	<25	8.5
Rimrock, AZ	AM (E33)	AdEdge	90[a]	50	170	7.2
Valley Vista, AZ	AM (AAFS50/ARM 200)	Kinetico	37	41	<25	7.8
Fruitland, ID	IX (A300E)	Kinetico	250	44	<25	7.4
STMGID, NV	AM (GFH/Kemiron)	Siemens	350	39	<25	7.4

AM = adsorptive media; C/F = coagulation/filtration; IX = ion exchange;
SM = system modification
MDWCA = Mutual Domestic Water Consumer's Association; STMGID = South Truckee Meadows General Improvement District; WRWC = White Rock Water Company
STS = Severn Trent Services
(a) Design flowrate reduced by 50% due to system reconfiguration from parallel to series operation.
(b) Arsenic exists mostly as As(III).
(c) Iron exists mostly as soluble Fe(II).

1.3 Project Objectives

The objective of the Round 1 arsenic demonstration program is to conduct 12 full-scale arsenic treatment technology demonstration studies on the removal of arsenic from drinking water supplies. The specific objectives are to:

- Evaluate the performance of the arsenic removal technologies for use on small systems.
- Determine the required system operation and maintenance (O&M) and operator skill levels.
- Characterize process residuals produced by the technologies.
- Determine the capital and O&M cost of the technologies.

This report summarizes the performance of the Kinetico system operated at Valley Vista, AZ, from June 24, 2004, through September 18, 2006. The types of data collected included system operation, water quality (both across the treatment train and in the distribution system), residuals, and capital and O&M cost.

Section 2.0 SUMMARY AND CONCLUSIONS

Based on the information collected from operation of Kinetico's FA-236-AS arsenic removal system at Valley Vista, AZ, from June 24, 2004, to September 18, 2006, the following conclusions were made relating to the overall objectives of the treatment technology demonstration study.

Performance of the arsenic removal technology for use on small systems:

- Without pH adjustment, AAFS50 media had a relatively short run length, reaching 10-µg/L of arsenic breakthrough in the system effluent after treating only 8,240 bed volumes (BV), or 2,058,000 gal of water. pH adjustment from an average value of 7.7 to 6.9 significantly increased AAFS50's adsorptive capacity, tripling the media run length from 8,240 to 23,030 BV.
- Effluent arsenic concentrations varied with influent pH values, rising or falling correspondingly to any increase or decrease in pH.
- An intermittent system operation (with the system operating for 16 versus 24 hr/day) appeared to have some positive impact on the media run length. The AAFS50 system thus operated had an approximately 30% longer run length.
- Without pH adjustment, ARM 200 media reached 10-µg/L of arsenic breakthrough in the system effluent at 25,720 BV (or 8,464,000 gal), which was comparable to that of the AAFS50 media run with pH adjustment.
- Little or no chlorine was consumed by the AAFS50 media, but some consumption was observed at the beginning of the ARM 200 media run up to 4,600 BV.
- Arsenic (and pH and alkalinity values during periods of acid addition) in the distribution system decreased most prominently nearest to the treatment plant. More distant locations contained higher arsenic than the treatment plant effluent, presumably due to blending with other well water in the distribution system. Other parameters did not appear to be significantly impacted.

Required system O&M and operator skill levels:

- After media loading, it was essential to verify media volume via freeboard measurements to ensure that the correct amount of media had been loaded into the adsorption tanks.
- Without pH adjustment, the demand on the operator was typically 5 to 10 min/day to visually inspect the system and record operational parameters. Acid addition, however, entailed significant complexities, troubleshooting, and safety precautions, thus increasing the labor requirement to 20 to 30 min/day. Operational issues related to the pH adjustment equipment persisted throughout its use.
- Semi-automatic controls for tank-position switching did not function properly at first due to default setting issues. No further problems occurred after the vendor modified the programming and installed an uninterruptible power supply (UPS).

Characteristics of residuals produced by the technology:

- The FA-236-AS system was backwashed monthly, generating between 1,025 and 1,430 gal of water. Nearly 100% of the wastewater produced during normal operations was reclaimed via a backwash recycling system.
- Spent AAFS50 and ARM 200 media passed Toxicity Characteristic Leaching Procedure (TCLP) tests and, therefore, could be disposed of in a sanitary landfill as non-hazardous waste.

Capital and O&M cost of the technology:

- The capital investment for the 37-gal/min (gpm) system was $228,309, including $122,544 for equipment, $50,659 for site engineering, and $55,106 for installation. This cost equated to $6,171/gpm (or $4.29/gal/day [gpd]), not including the cost for shed construction.
- Based on total O&M cost of $1.49/1,000 gal, the most economical option evaluated was AAFS50 media using pH adjustment and typical lead/lag operation (i.e., rebedding the lead tank only when the lag tank reaches 10 μg/L of arsenic and switching tank positions).

Section 3.0 MATERIALS AND METHODS

3.1 General Project Approach

Following the predemonstration activities summarized in Table 3-1, the performance evaluation study of the Kinetico treatment system began on June 24, 2004. Table 3-2 summarizes the types of data collected and/or considered as part of the technology evaluation process. The overall system performance was evaluated based on its ability to consistently remove arsenic to below the target MCL of 10 μg/L through the collection of water samples across the treatment train. The reliability of the system was evaluated by tracking the unscheduled system downtime and frequency and extent of repair and replacement. The unscheduled downtime and repair information were recorded by the plant operator on a Repair and Maintenance Log Sheet.

The O&M and operator skill requirements were evaluated based on a combination of quantitative data and qualitative considerations, including the need for pre- and/or post-treatment, level of system automation, extent of preventative maintenance activities, frequency of chemical and/or media handling and inventory, and general knowledge needed for relevant chemical processes and related health and safety practices. The staffing requirements for system operation were recorded on an Operator Labor Hour Log Sheet.

The quantity of aqueous and solid residuals generated was estimated by tracking the volume of backwash water produced during each backwash cycle and the need to replace the media upon arsenic breakthrough. Backwash water and spent media were sampled and analyzed for chemical characteristics.

Table 3-1. Predemonstration Study Activities and Completion Dates

Activity	Date
Introductory Meeting Held	July 31, 2003
Request for Quotation Issued to Vendor	August 4, 2003
Draft Letter of Understanding Issued	August 13, 2003
Final Letter of Understanding Issued	September 16, 2003
Vendor Quotation Received	September 25, 2003
Purchase Order Established	October 16, 2003
Letter Report Issued	October 17, 2003
Draft Study Plan Issued	February 4. 2004
Engineering Package Submitted to ADEQ	February 17, 2004
Final Study Plan Issued	February 24, 2004
Approval to Construct Granted by ADEQ	March 23, 2004
Construction Permit Issued by County	April 12, 2004
FA-236-AS System Shipped	April 23, 2004
System Installation Completed	May 7, 2004
System Shakedown Completed	May 11, 2004
Shed Construction Began	May 24, 2004
Shed Construction Completed	May 28, 2004
Approval of Construction Granted by ADEQ	June 15, 2004
Performance Evaluation Began	June 24, 2004

ADEQ = Arizona Department of Environmental Quality

Table 3-2. Evaluation Objectives and Supporting Data Collection Activities

Evaluation Objective	Data Collection
Performance	-Ability to consistently meet 10 μg/L of arsenic in treated water
Reliability	-Unscheduled system downtime -Frequency and extent of repairs including a description of problems, materials and supplies needed, and associated labor and cost
System O&M and Operator Skill Requirements	-Pre- and post-treatment requirements -Level of system automation for system operation and data collection -Staffing requirements including number of operators and laborers -Task analysis of preventative maintenance including number, frequency, and complexity of tasks -Chemical handling and inventory requirements -General knowledge needed for relevant chemical processes and health and safety practices
Residual Management	-Quantity and characteristics of aqueous and solid residuals generated by system operation
System Cost	-Capital cost for equipment, site engineering, and installation -O&M cost for media, chemical consumption, electricity usage, and labor

The cost of the system was evaluated based on the capital cost per gpm (or gpd) of design capacity and the O&M cost per 1,000 gal of water treated. This task required tracking the capital cost for equipment, engineering, and installation, as well as the O&M cost for media replacement and disposal, chemical supply, electricity usage, and labor.

3.2 System O&M and Cost Data Collection

The plant operator performed daily, weekly, and monthly system O&M and data collection according to instructions provided by Kinetico and Battelle. On a daily basis, the plant operator recorded system operational data, such as pressure, flowrate, totalizer, and hour meter readings on a Daily System Operation Log Sheet; checked the sodium hypochlorite (NaOCl) and sulfuric acid (H_2SO_4) drum levels; and conducted visual inspections to ensure normal system operations. If any problems occurred, the plant operator contacted the Battelle Study Lead, who determined if the vendor should be contacted for troubleshooting. The plant operator recorded all relevant information on the Repair and Maintenance Log Sheet. Water quality parameters, including temperature, pH, dissolved oxygen (DO), oxidation-reduction potential (ORP), and residual chlorine were measured and recorded on a Weekly On-Site Water Quality Parameters Log Sheet. Monthly backwash data also were recorded on a Backwash Log Sheet.

The capital cost for the arsenic removal system consisted of the cost for equipment, site engineering, and system installation. The O&M cost consisted of the cost for media replacement and spent media disposal, chemical and electricity usage, and labor. Consumption of NaOCl and H_2SO_4 was tracked on the Daily System Operation Log Sheet. Electricity consumption was determined from a utility bill. Labor for various activities, such as the routine system O&M, troubleshooting and repair, and demonstration-related work, was tracked using an Operator Labor Hour Log Sheet. The routine O&M included activities such as completing field logs, replenishing chemical solutions, ordering supplies, performing system inspection, and others as recommended by the vendor. The demonstration-related labor, including activities such as performing field measurements, collecting and shipping samples, and communicating with the Battelle Study Lead and the vendor, was recorded, but not used for the cost analysis.

3.3 Sample Collection Procedures and Schedules

To evaluate the system performance, samples were collected from the wellhead, treatment plant, and distribution system. The sampling schedules and analytes for each sampling event are listed in Table 3-3. In addition, Figure 3-1 presents a flow diagram of the treatment system along with the analytes and schedules at each sampling location. Specific sampling requirements for analytical methods, sample volumes, containers, preservation, and holding times are presented in Table 4-1 of the EPA-endorsed Quality Assurance Project Plan (QAPP) (Battelle, 2003). The procedure for arsenic speciation is described in Appendix A of the QAPP.

3.3.1 Source Water. During the initial visit to the site, source water samples were collected and speciated using an arsenic speciation kit described in Section 3.4.1. The sample tap was flushed for several minutes before sampling; special care was taken to avoid agitation, which could cause unwanted oxidation. Analytes for the source water samples are listed in Table 3-3.

3.3.2 Treatment Plant Water. Water samples were collected weekly across the treatment train at the wellhead (IN), after Tank A (TA), and after Tank B (TB) for on- and off-site analyses shown in Figure 3-1 and Table 3-3. On-site measurements also were made for samples collected after prechlorination (AC) since the system was modified to inject chlorine before adsorption on July 27, 2004. Over the course of the demonstration study, several changes were made to the sampling schedules as listed below and in Table 3-3.

- Speciation sampling was reduced from monthly to bimonthly from October 20, 2004, through June 8, 2005, and then discontinued after February 1, 2006, due to absence of As(III) in source water.
- Orthophosphate analysis was replaced with total phosphorus analysis since November 2, 2005, due to lack of orthophosphate in raw water and issues related to the short hold time for orthophosphate.
- Regular weekly sampling was reduced from three to two times per four week cycle beginning on March 8, 2006.
- Total and soluble Al analyses were discontinued beginning on March 8, 2006, due to the switch from AAFS50 to ARM 200 media.
- On-site measurements were reduced to monthly for pH, temperature, and chlorine only beginning on May 17, 2006.

3.3.3 Backwash Water. Grab backwash wastewater samples were initially collected directly from the sample tap on the backwash wastewater discharge line during the backwash of each tank and filtered with 0.45-µm disc filters. Unfiltered samples were analyzed for pH and total dissolved solids (TDS), and filtered samples were analyzed for soluble Al, As, Fe, and Mn. Beginning on November 14, 2005, composite samples were collected following a modified procedure to allow for more representative characterization of the wastewater. Tubing directed a portion of backwash water from the sample tap at approximately 1 gpm into a clean plastic container of adequate volume over the duration of the backwash for each tank. After the content in the container was thoroughly mixed, composite samples were collected and/or filtered on-site with 0.45-µm disc filters and analyzed for total and soluble Al, As, Fe, and Mn, pH, TDS, total suspended solids (TSS), and turbidity. Beginning March 8, 2006, total and soluble Al analyses were discontinued due to the switch from AAFS50 to ARM 200 media. Table 3-3 lists the schedule and analytes for the backwash water samples.

Table 3-3. Sampling Schedule and Analyses

Sample Type	Sampling Location(s)[a]	No. of Samples	Frequency	Analytes[b]	Collection Date(s)
Source Water	IN	1	Once (during initial site visit)	On-site: pH Off-site: As(III), As(V), total and soluble Al, As, Fe, Mn, Mo, Sb, and V, Na, Ca, Mg, Cl, F, SO_4, SiO_2, PO_4, TOC, turbidity, and alkalinity	07/31/03
Treatment Plant Water	IN, TA, and TB	3	Weekly[c]	On-site[d,e]: pH, temperature, DO, ORP, and Cl_2 (free and total) Off-site: total Al, As, Fe, and Mn, SiO_2, PO_4[f], turbidity, and alkalinity	See Appendix B
		3	Monthly or bimonthly[g]	Same as above plus the following off-site: As(III), As(V), soluble Al, As, Fe, and Mn, Ca, Mg, F, NO_3, and SO_4	See Appendix B
Backwash Water	BW	2	Monthly[h]	Off-site: total[i] and soluble Al, As, Fe, and Mn, pH, TDS, TSS[i], and turbidity[i]	See Table 4-12
Distribution Water	DS (two non-LCR residences and one non-residence)	4[j]	Monthly[k]	Off-site: total Al, As, Fe, Mn, Cu, and Pb, pH, and alkalinity	See Table 4-13
Residual Solids	Top, middle, and bottom of Tanks A and B	3 per tank	Per media changeout (five times)	Off-site: TCLP metals and total Al, As, Ca, Cd, Cu, Fe, Mg, Mn, Ni, P, Pb, Si, and Zn	10/25/04, 04/29/05 (Tank A only), 07/29/05, 02/28/06, 10/19/06

(a) Corresponding to sample locations in Figure 3-1, i.e., IN = at wellhead; TA = after Tank A; TB = after Tank B; BW = at backwash water discharge line from Tanks A and B
(b) Al discontinued for all sample types since 03/08/06 due to switch from AAFS50 to ARM 200 media.
(c) Three weekly sets taken per four-week cycle from 07/07/04 to 01/25/06; two sets per four-week cycle from 03/08/06 to 09/06/06.
(d) On-site measurements performed for samples taken after prechlorination (AC) since 07/27/04. Chlorine measurements not performed at IN.
(e) pH, temperature, and Cl_2 (free and total) measured monthly and DO and ORP discontinued since 05/17/06.
(f) PO_4 analysis replaced with total phosphorus analysis since 11/02/05.
(g) Bimonthly from 10/20/04 to 06/08/05; otherwise monthly.
(h) Monthly samples taken from 08/16/04 through 06/28/06.
(i) Total As, Fe, Mn, and Al, and TSS analyses performed and turbidity discontinued since 11/14/05.
(j) Three first draw and one flushed samples.
(k) Four baseline sampling events performed before system startup during February and March 2004. Monthly samples taken from 07/28/04 through 01/18/06.

LCR = Lead and Copper Rule

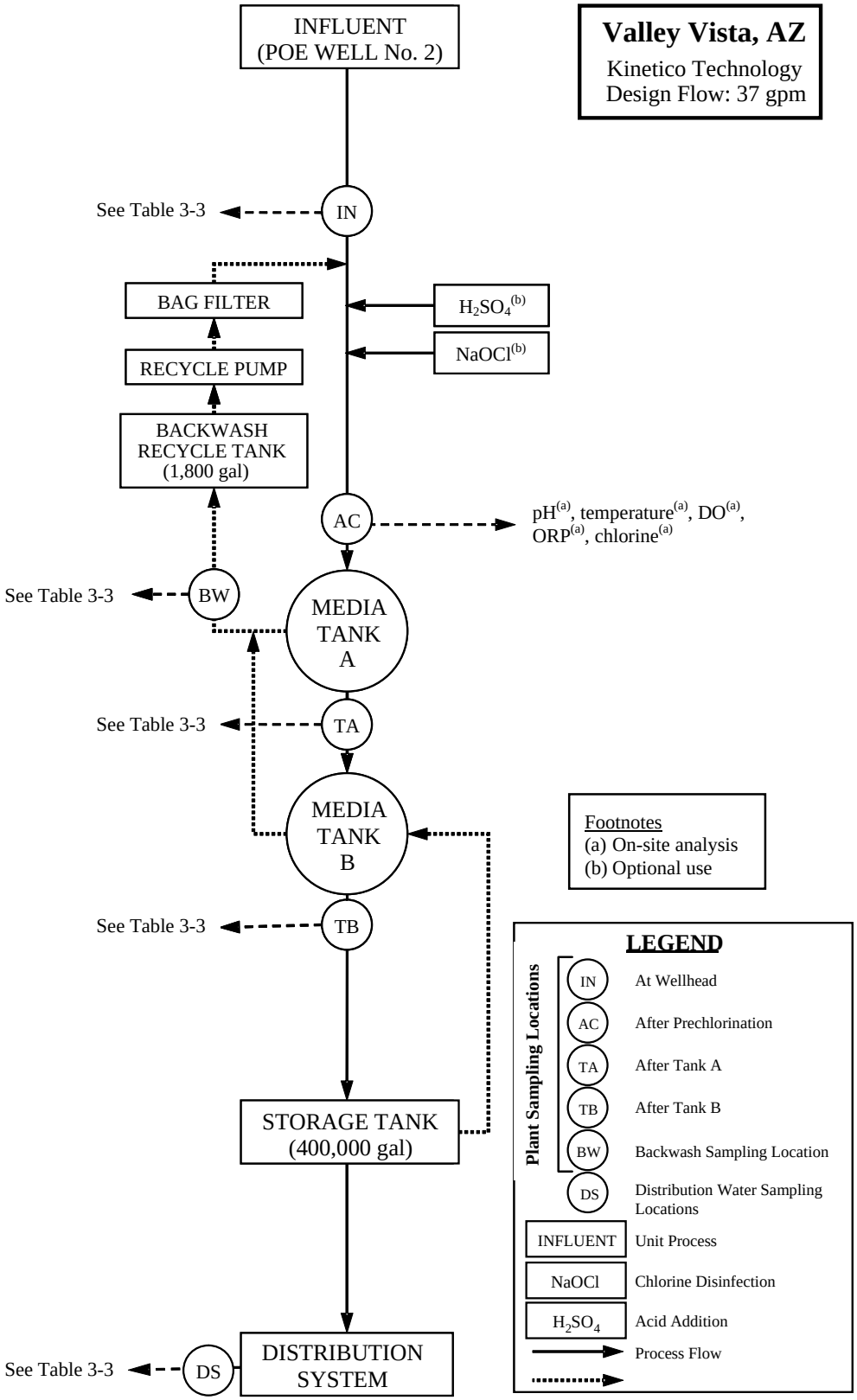

Figure 3-1. Process Flow Diagram and Sampling Locations

3.3.4 Distribution System Water. Samples were collected from the distribution system to determine the impact of the arsenic treatment system on the water chemistry in the distribution system, specifically, the arsenic, lead, and copper levels. From February to March 2004, four sets of baseline distribution water samples were collected from three locations within the distribution system. Following the system startup, distribution system sampling continued on a monthly basis until January 2006 at the same three locations. Ideally, the sampling locations selected would have been the historical Lead and Copper Rule (LCR) locations served primarily by the source water well, Point-of-Entry (POE) Well No. 2. However, because the distribution system was supplied by POE Well No. 2 and other wells, such LCR locations did not exist (Section 4.1.2). As such, two residences and one non-residence not used for the historical LCR sampling but supplied primarily by POE Well No. 2 were selected for the distribution system sampling.

The samples at the two non-LCR residences were taken following an instruction sheet developed according to the *Lead and Copper Monitoring and Reporting Guidance for Public Water Systems* (EPA, 2002). The homeowners recorded the dates and times of last water usage before sampling and of sample collection for calculation of the stagnation time. Sampling at the non-residence was performed by the plant operator with the first sample taken at the first draw and the second sample taken after the sample tap was flushed for several minutes. All samples were collected from a cold-water faucet that had not been used for at least 6 hr to ensure that stagnant water was sampled.

3.3.5 Residual Solids. Insufficient backwash solids were present for sampling, therefore, only spent media were collected for residual solids analyses. Three AAFS50 spent media samples were collected from each tank during four media changeouts on October 25, 2004, April 29, 2005 (Tank A only), July 29, 2005, and February 28, 2006. Spent media were sampled from the top, middle, and bottom layers of each media bed using a 5-gal wet/dry shop vacuum that had been thoroughly cleaned and disinfected before sampling. The media collected from each target layer were transferred from the shop vacuum to a clean 5-gal bucket and mixed carefully with a small garden spade. A composite sample from each layer was collected into a wide-mouth, 2-gal plastic container and sent to Battelle for analysis. Spent media also were collected after an ARM 200 media run on October 19, 2006, although no changeout was performed at this time due to completion of the demonstration study. Due to a power outage, ARM 200 samples were collected manually from the top of the media beds and then at the middle and bottom of each tank through the 4-in upper and lower side flanges by removing each respective viewglass (Figure 4-5). Metal analyses were conducted on air dried and acid digested samples (see analytes in Table 3-3), and TCLP tests were conducted on unprocessed samples following the protocol described in the QAPP (Battelle, 2003).

3.4 Sampling Logistics

3.4.1 Preparation of Arsenic Speciation Kits. The arsenic field speciation method uses an anion exchange resin column to separate the soluble arsenic species, As(V) and As(III) (Edwards et al., 1998). Resin columns were prepared in batches at Battelle laboratories according to the procedures detailed in Appendix A of the QAPP (Battelle, 2003).

3.4.2 Preparation of Sampling Coolers. For each sampling event, a cooler was prepared with the appropriate number and type of sample bottles, disc filters, and/or speciation kits needed. All sample bottles were new and contained appropriate preservatives. Each sample bottle was affixed with a pre-printed, colored-coded label consisting of the sample identification (ID), date and time of sample collection, collector's name, site location, sample destination, analysis required, and preservative. The sample ID consisted of a two-letter code for the specific water facility, the sampling date, a two-letter code for a specific sampling location, and a one-letter code designating the arsenic speciation bottle (if necessary). The sampling locations at the treatment plant were color-coded for easy identification (e.g.,

orange designated TA). The labeled bottles for each sampling location were bagged separately and packed in the cooler.

In addition, all sampling- and shipping-related materials, such as disposable gloves, sampling instructions, chain-of-custody forms, prepaid and addressed FedEx air bills, and bubble wrap, were included. The chain-of-custody forms and FedEx air bills were complete except for the operator's signature and the sample dates and times. After preparation, the sample cooler was sent to the site via FedEx for the following week's sampling event.

3.4.3 Sample Shipping and Handling. After sample collection, samples for off-site analyses were packed carefully in the original coolers with wet ice and shipped to Battelle. Upon receipt, the sample custodian checked sample IDs against the chain-of-custody forms and verified that all samples indicated on the forms were included and intact. Discrepancies noted by the sample custodian were addressed with the plant operator by the Battelle Study Lead. The shipment and receipt of all coolers by Battelle were recorded on a cooler tracking log.

Samples for metal analyses were stored at Battelle Inductively Coupled Plasma-Mass Spectrometry (ICP-MS) Laboratory. Samples for other water quality analyses were packed in coolers at Battelle and picked up by couriers by Battelle's subcontract laboratories, including AAL in Columbus, OH and TCCI Laboratories in New Lexington, OH The chain-of-custody forms remained with the samples from the time of preparation through analysis and final disposition. All samples were archived by the appropriate laboratories for the respective duration of the required hold time and disposed of properly thereafter.

3.5 Analytical Procedures

The analytical procedures described in Section 4.0 of the QAPP (Battelle, 2003) were followed by Battelle ICP-MS Laboratory, AAL, and TCCI Laboratories. Laboratory quality assurance/quality control (QA/QC) of all methods followed the prescribed guidelines. Data quality in terms of precision, accuracy, method detection limit (MDL), and completeness met the criteria established in the QAPP (i.e., 20% relative percent difference [RPD], 80 to 120% recovery, and 80% completeness). The quality assurance (QA) data associated with each analyte will be presented and evaluated in a QA/QC Summary Report to be prepared under separate cover upon completion of the Arsenic Demonstration Project.

Field measurements of pH, temperature, DO, and ORP were conducted by the plant operator using a WTW Multi 340i handheld meter, which was calibrated for pH and DO prior to use following the procedures provided in the user's manual. The ORP probe also was checked for accuracy by measuring the ORP of the standard solution and comparing it to the expected value. The plant operator collected a water sample in a clean, plastic beaker and placed the probe in the beaker until a stable value was obtained. The plant operator also performed free and total chlorine measurements using Hach chlorine test kits following the user's manual.

Section 4.0 RESULTS AND DISCUSSION

4.1 Facility Description

Four wells owned by AWC supplied water to a population of 1,520 in Sedona, AZ. POE Well No. 2, located at 315 Deer Pass Drive, with a capacity of 37 gpm, was selected for this demonstration study. Figure 4-1 shows the predemonstration site conditions in late July 2003.

POE Well No. 2, drilled in January 1974, is 6-in diameter and 585-ft deep with a 565 ft-long slotted screen extending from 20 to 585 ft below ground surface (bgs). Prior to installation of the arsenic removal system, treatment consisted of only a chlorine injection system (Figure 4-2) using 4% NaOCl at a feed rate of 0.6 gpd to reach a target chlorine residual of 0.6 mg/L (as Cl_2). The chlorinated water then entered the distribution system and two gravity-fed storage tanks with a total capacity of 400,000 gal. POE Well No. 2 was controlled by level sensors in the storage tanks and operated for approximately 8 hr/day. For the purpose of this demonstration study, the well was operated 24 hr/day for most of the study.

Figure 4-1. Predemonstration Site Conditions
(Right to Left: Wellhead, Piping, Hydropneumatic Tank, Electrical Panel, and Chlorine Shed)

4.1.1 Source Water Quality. Source water samples were collected on July 31, 2003, from POE Well No. 2 for analysis. The results of the source water analyses, along with those provided by the facility to EPA and those independently collected and analyzed by EPA and Kinetico, are presented in Table 4-1.

Figure 4-2. Existing Chlorine Injection System

Based on the July 31, 2003, sampling results, the total arsenic concentration in POE Well No. 2 was 41.0 µg/L, with arsenic existing primarily as As(V) (i.e., 93% at 37.8 µg/L). A small amount of arsenic also was present as particulate arsenic (i.e., 2.8 µg/L) and As(III) (i.e., 0.3 µg/L). Because arsenic already existed as As(V), which adsorbs better onto the AAFS50 and ARM 200 media, prechlorination upstream of the treatment process was not required.

Source water pH values ranged from 7.6 to 7.9. Kinetico proposed to adjust the source water pH to 7.2 to improve the AAFS50's arsenic adsorptive capacity. Therefore, pH adjustment equipment was installed at the site, but was not used initially in order to evaluate the capacity of the media under the unaltered pH condition.

The capacity of adsorptive media can be impacted by high levels of competing ions such as silica, phosphate, and fluoride. The concentrations of these ions appeared to be low enough as not to affect the media's adsorption of arsenic. Source water iron, manganese, and aluminum concentrations were below their respective method reporting limits. These values were comparable to the levels reported by all other parties. Vanadium was measured at 16.2 µg/L.

4.1.2 Distribution System. The distribution system was supplied by POE Well No. 2 and three other production wells, i.e., Gulf Well, Rancho Rojo Well, and Wild Horse Mesa Well with capacities of 262, 118, and 23 gpm, respectively, located within a one-mile radius. After chlorination, water from these wells blended within the distribution system and flowed into two gravity-fed storage tanks (totaling 400,000 gal), located about a half mile downstream of POE Well No. 2. There was a small area of homes served predominantly by water produced by POE Well No. 2. Efforts were made to select sampling locations in this area of the distribution system (Section 3.3.4).

Table 4-1. POE Well No. 2 Water Quality Data

Parameter	Unit	Facility Data[a]	EPA Data	Kinetico Data	Battelle Data	AWC Data[c]
Sampling Date		Not specified	10/03/02	12/02	07/31/03	01/94–03/02
pH	–	7.6	NS	7.9	7.7	7.6
Alkalinity (as $CaCO_3$)	mg/L	162	154	160	154	160
Hardness (as $CaCO_3$)	mg/L	149	NS	160	172	149
Chloride	mg/L	11.0	9.7	19.8	11.0	11.3
Fluoride	mg/L	NS	NS	0.1	0.2	<0.1–0.2
Sulfide	mg/L	NS	2.8	NS	NS	NS
Sulfate	mg/L	8.7	8.4	9.0	8.7	9.8
Silica (as SiO_2)	mg/L	20.8	19.3	21.4	18.5	NS
Orthophosphate (as P)	mg/L	<0.065[b]	NS	<0.1	<0.1	NS
TOC	mg/L	<0.5	NS	NS	NA	NS
As (total)	µg/L	40.0	39.0	40.0	41.0	34–47
As (soluble)	µg/L	NS	NS	NS	38.1	NS
As (particulate)	µg/L	NS	NS	NS	2.8	NS
As(III)	µg/L	NS	NS	NS	0.3	NS
As(V)	µg/L	NS	NS	NS	37.8	NS
Fe (total)	µg/L	<10	7.0	<30	<30	<10
Fe (soluble)	µg/L	NS	NS	NS	<30	NS
Al (total)	µg/L	NS	<25	NS	<10	NS
Al (soluble)	µg/L	NS	NS	NS	<10	NS
Mn (total)	µg/L	<50	<0.4	NS	<0.1	<50
Mn (soluble)	µg/L	NS	NS	<10	<0.1	NS
V (total)	µg/L	NS	NS	NS	16.2	NS
V (soluble)	µg/L	NS	NS	NS	15.7	NS
Mo (total)	µg/L	NS	NS	NS	<0.1	NS
Mo (soluble)	µg/L	NS	NS	NS	<0.1	NS
Sb (total)	µg/L	NS	<25	NS	<0.1	<5
Sb (soluble)	µg/L	NS	NS	NS	<0.1	NS
Na (total)	mg/L	11.0	9.9	10.0	11.1	NS
Ca (total)	mg/L	35.0	34.5	35.5	39.3	34.6
Mg (total)	mg/L	15.0	16.2	17.5	18.0	15.2

(a) Provided by AWC to EPA for demonstration site selection.
(b) Provided by EPA.
(c) Samples collected after chlorination.
NS = not sampled; TOC = total organic carbon

The distribution piping consisted of 6-in-diameter ductile iron and asbestos cement pipe. Service lines to individual homes were primarily copper and polyethylene pipe with a few homes, including possibly the DS1 distribution sampling location, having lead joints. Water from the distribution system has been sampled periodically by AWC for state and federal compliance with the SDWA. Every month, three samples are collected for bacteria analysis. Under the LCR, samples have been collected from customer taps at 14 locations every three years. The monitoring results from AWC's Consumer Confidence Reports (CCRs) for 2003 to 2005 are summarized in Table 4-2.

Table 4-2. Distribution System Water Quality Data[a]

Parameter	Unit	2003	2004	2005
Alpha Emitters	pCi/L	0.3–6.4	–	–
Arsenic	µg/L	33–37	ND–34	ND–39
Barium	µg/L	120–140	–	–
Chlorine	mg/L	–	–	0.3–0.4
Fluoride	mg/L	0.12–0.13	–	–
Nitrate (as N)	mg/L	0.2–0.7	0.2–0.9	ND–4.66
Sodium	mg/L	7.4–10	–	–
Sulfate	mg/L	5.3[b]	–	–
Total Trihalomethanes	µg/L	–	ND–4.9	–
Uranium	µg/L	ND–1.8	–	–
Copper	mg/L	0.16[c]	–	0.25
Radon	pCi/L	170–190[b]	–	–

Source: AWC, 2004; 2005; 2006.
(a) All other constituents not detected.
(b) Sampled in 1999.
(c) Sampled in 2002.
ND = not detected

4.2 Treatment Process Description

Kinetico's FA-236-AS Adsorptive Arsenic Removal System used standard downflow filtration through two pressure tanks arranged in series. Each tank initially contained a fixed bed of Alcan's ActiGuard AAFS50 media, an iron-modified activated alumina (AA) media engineered with a proprietary additive to enhance its arsenic adsorptive capabilities. After three AAFS50 media runs, the pressure tanks were rebedded with Engelhard/BASF's ARM 200 media, an iron oxide/hydroxide media. Both media have NSF International (NSF) Standard 61 approval for use in drinking water, and can adsorb As(III) and As(V) at pH values of 5 to 9. However, the best media performance is achieved with As(V) at the lower end of this pH range. Table 4-3 presents key physical and chemical properties of the media as provided by the vendors.

For series operation, the media in the lead tank is generally replaced when it completely exhausts its capacity or when the effluent from the lag tank reaches 10 µg/L of arsenic. After rebedding the lead tank with new media, it is switched to the lag position, and the lag tank is switched to the lead position. The series operation better utilizes the arsenic removal capacity of the media when compared to parallel system design and operation.

The FA-236-AS system included a chemical feed system for pH adjustment, two pressure tanks arranged in series, a backwash recycle system, and associated instrumentation to monitor pressure, pH, throughput, and flowrate. The system also was equipped with a NEMA control panel that housed a touch screen operator interface panel (OIP), a programmable logic controller (PLC), and a modem. The Allen Bradley PLC actuated George Fischer polyvinyl chloride (PVC) pneumatic valves, as necessary, with a 2-horsepower (hp) compressor (Speedaire model 4B234B) for service and backwash operations. The system also featured schedule 80 PVC solvent bonded plumbing and all the necessary isolation and check valves, Y-strainers, and sampling ports. Figure 4-3 is a simplified piping and instrumentation diagram (P&ID) of the treatment system, and Figure 4-4 is a photograph of the system. The system's design features are summarized in Table 4-4. The major processes included:

Table 4-3. Properties of AAFS50 and ARM 200 Media

Parameter	Alcan's ActiGuard AAFS50	Engelhard/BASF's ARM 200
Physical Properties		
Physical form	Dry granular media	Dry granular media
Matrix	Iron-modified AA	Iron oxide/hydroxide
Color	(Light) Brown	(Dark) Brown
Bulk density (g/cm^3) [lb/ft^3]	1.06[(a)] [66[(a)]]	0.80[(b)] [50[(b)]]
BET area (m^2/g)	220	225
Sieve size (U.S. Standard)	28 × 48 mesh	12 × 40 mesh
Moisture content (%)	17.4[(b)]	8
Attrition (%)	0.3	<1
Chemical Composition		
Al_2O_3 + additive (%)	83	NA
Silicon (as SiO_2) (%)	0.020	NA
Titanium (as TiO_2) (%)	0.002	NA
Loss on ignition (%)	17	NA

(a) Reported as 0.91 g/cm^3 (56.8 lb/ft^3) on Alcan's Product Data Sheet.
(b) As measured by Battelle.
NA = data not available

- **Intake**. Source water was supplied from POE Well No. 2 at 36 gpm. A flow-limiting device prevented excessive hydraulic loading to the system, and ancillary piping enabled the treatment system to be bypassed when necessary (Figure 4-5).
- **pH Adjustment**. The pH control system consisted of a solenoid-driven 4.4-L/hr, flow-paced chemical metering pump, a 2-in in-line static mixer, an acid draw assembly with a low-level float, an in-line pH transmitter (Burkert model 8205), and a 55-gal drum containing 37 to 50% H_2SO_4 to adjust the feed water pH to a desired setpoint (Figure 4-5). The pH of the feed water was adjusted at the end of AAFS50 Media Run 1 and throughout AAFS50 Media Runs 2 and 2a.
- **Chlorination**. Because As(V) was the predominating species in source water, oxidation of the water was not necessary. Therefore, NaOCl was initially applied after the adsorption tanks via the facility's existing chlorine feed system for disinfection purposes (Figure 4-2). After approximately one month of system operation, algae growth was observed on the viewglass of the lead tank (Figure 4-5). As a result, the chlorine injection point was relocated upstream of the adsorption tanks to prevent biological growth. The NaOCl feed system consisted of a 1.5-gal/hr (gph) chemical feed pump and a 35-gal day tank containing 4% NaOCl. Average chlorine residuals were maintained at 0.4 to 0.5 mg/L (as Cl_2) throughout the treatment train prior to entering the distribution system.

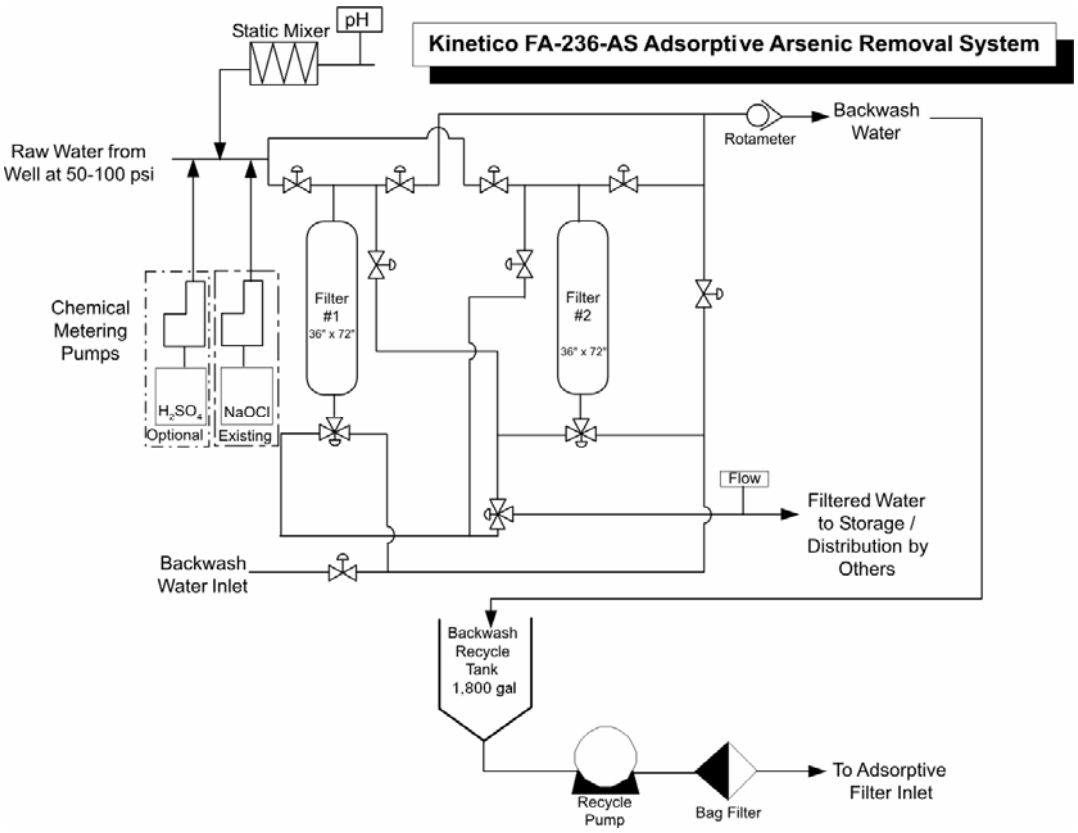

Figure 4-3. Schematic of Kinetico's FA-236-AS Treatment System

Figure 4-4. Kinetico's FA-236-AS Treatment System on Concrete Pad

Table 4-4. Design Features for Kinetico's FA-236-AS Treatment System

Parameter	Design Values for AAFS50 Media Runs 1, 2, 2a, and 3	Design Values for ARM 200 Media Run 4	Remarks
Pretreatment			
37% H_2SO_4 (gpd)	5.5	0	pH setpoint at 7.2
4% NaOCl (mg/L)	Not required		Added for disinfection
Filtration			
No. of Tanks	2		Series configuration
Tank Size (in)	36 D × 72 H		7.1 ft^2 cross-section
Media Volume (ft^3/tank)	22		-
Media Bed Depth (in)	37		-
Peak Flowrate (gpm)	37		-
EBCT (min/tank)	4.5		-
Hydraulic Utilization (%)	100	100	24 hr/day operation
Production (gpd)	53,280	53,280	-
Media Run Length to 10-µg/L As Breakthrough (BV)	18,680	26,000	Breakthrough from lag tank; 1 BV = 44 ft^3
Media Life (day)	56	83	Based on media capacity and utilization
Backwash			
Frequency (week)	2–3	4	-
Flowrate (gpm)	55–60	42	-
Hydraulic Loading Rate (gpm/ft^2)	8	6	-
Duration (min/tank)	10–12	15	-
Wastewater Production (gal)	1,100–1,440	1,260	-
Recycle Flowate (gpm)	3.7	3.7	10% of system flow

D = diameter; H = height

- **Adsorption**. The system included two 36-in-diameter, 72-in-tall pressure tanks (Structural model 31712) in series configuration, each containing, as per original design, 22 ft^3 of AAFS50 or ARM 200 media (see Section 4.4.4 for specific media volumes for each media run). Each tank had 6-in top and bottom flanges, a diffuser-style upper distributor, a hub and lateral-style lower distributor, and two 4-in side flanges with viewglasses to allow for media observation. The adsorption tanks were constructed of composite fiberglass and rated for a working pressure of 150 pounds per square inch (psi). The tanks were skid mounted and piped to a valve rack mounted on a polyurethane coated, welded steel frame. The system also was equipped with the necessary valves and secondary piping to allow the tank positions to be switched from lead to lag and vice versa.

- **Backwash**. Backwash was recommended by the vendor to remove particulates and/or media fines accumulating in the beds and prevent channeling. Backwash was semi-automatic and initiated manually by the operator when a light on the control panel indicated that a set throughput had been reached. After the system was taken offline, upflow backwash using treated water was performed on Tank A followed by Tank B (regardless of lead/lag position) at an adjustable flowrate controlled by a George Fischer diaphragm valve.

Figure 4-5. Treatment Process Components
(Clockwise from Top: POE Well No. 2 and Bypass Piping; Acid Addition Setup; In-Line pH Transmitter; Adsorption Tanks and Lower Distributor; and Main Control Panel)

- **Backwash Water Recycling**. The backwash water was stored in a 1,800 gal, polyethylene, conical-bottom holding tank (Figure 4-6) equipped with high/low level sensors. Recycling capabilities enabled this water to be reclaimed. After solids settled in the storage tank for a preset/adjustable time period, a 1-hp vertical pump (G&L Pumps model SSV) pumped the backwash water through a 25-µm bag filter to remove any remaining suspended solids (Figure 4-6). A piping loop then reclaimed the filtered wastewater by blending it with source water at a maximum rate of 10% of the system flowrate.

4.3 System Installation

The system engineering, installation, shakedown, and startup activities were carried out by Kinetico and its local subcontractor, Fann Environmental in Prescott, AZ.

4.3.1 Permitting. The engineering submittal package included general arrangement drawings, a P&ID of the FA-236-AS system, and site, treatment system, and piping plans. The engineering drawings were certified by a Professional Engineer registered in the State of Arizona and submitted to ADEQ for review and approval in mid-February 2004. The Certificate of Approval to Construct (ATC) was received on March 23, 2004, and a construction permit was subsequently applied for and approved by Yavapai County in mid-April 2004. After system installation was completed, as-built drawings were submitted to ADEQ, and Approval of Construction (AOC) was subsequently issued on June 15, 2004.

Figure 4-6. Backwash Recycling Process Components
(Clockwise from Left: 1,800-gal Holding Tank; Recycle Pump and Bag Filter; and Backwash Flowrate Indicator and Pump Box)

4.3.2 System Installation, Shakedown, and Startup. The FA-236-AS treatment system was delivered to the site on April 23, 2004, after a 12 ft × 25 ft concrete pad was poured. The off-loading and installation of the system were performed, including piping connections to the inlet and distribution system. The mechanical installation, hydraulic testing of the unit (without media), and media loading were completed on May 11, 2004. Battelle provided operator training on data and sample collection from May 6 to 7, 2004.

4.3.3 System Enclosure. A 12 ft × 25 ft × 11.5 ft sun shed (Figure 4-7) was installed by AWC in late-May 2004 to protect the system from being exposed to extreme ambient conditions in the summer and winter since the system temperature was specified to range from 50 to 120 °F. Manufactured by Versa-Tube, the sun shed was constructed with a galvanized steel frame anchored to the concrete pad, and sheeted with 29-gauge steel with a specially coated surface. The shed was pre-engineered with loading capacities of 90 mph for wind and 30 lb/ft^2 for snow. From late-November to mid-December 2004, the sides and ends of the sun shed were enclosed with metal covering, exposed piping was insulated, and heat lamps were installed within the building for added protection from below-freezing temperatures.

Figure 4-7. Sun Shed (Top) and Completed Enclosure (Bottom)

4.4 System Operation

4.4.1 Operational Parameters. System operational data are tabulated and attached in Appendix A. Key parameters of each media run are summarized in Table 4-5. Media Run 1 began on June 24, 2004, and ended on August 4, 2004, when the arsenic concentration in the effluent of the lag tank exceeded 10 μg/L. Arrangements were then made to lower source water pH values to try to extend the AAFS50 media life (Section 4.4.2). Lowering pH values from September 17 to October 24, 2004, caused the effluent arsenic concentrations to decrease, but not to levels below 10 μg/L.

The spent AAFS50 media was subsequently replaced (Section 4.4.5.1), and Media Run 2 began on October 25, 2004 with pH adjustment. The treatment system produced water below the arsenic MCL until March 23, 2005, whereupon arrangements were made to replace the AAFS50 media in the lead tank and switch the tank positions. Thus, Media Run 2a began on April 29, 2005, and continued through July

Table 4-5. Kinetico's FA-236-AS Treatment System Operations

Parameter	Media Run 1	Media Run 2[b]	Media Run 3	Media Run 4
Media Evaluation Period[a]	06/24/04–08/04/04	10/25/04–03/23/05	10/12/05–01/25/06	03/07/06–08/23/06
Specifications				
Media Type	AAFS50	AAFS50	AAFS50	ARM 200
Media Volume (ft^3/tank)	16.7	22	22	22
Media Weight (lb/tank)	1,100	1,450	1,450	2,200
Media Bed Depth (in)	28	37	37	37
Treatment Operations				
Operating Time (hr/day)	24	24	16	24
Total Operating Time (hr)	977	3,562	1,653	4,065
Acid Addition (gpd)	0	2.8	0	0
Average Flowrate [Range] (gpm)	36 [35–39]	36 [36–38]	36 [36–39]	37 [37–39]
Average EBCT [Range] (min/tank)	3.5 [3.2–3.6]	4.6 [4.3–4.6]	4.6 [4.3–4.6]	4.4 [4.2–4.4]
Average Hydraulic Loading Rate [Range] (gpm/ft^2)	5.1 [4.9–5.5]	5.1 [5.1–5.4]	5.1 [5.1–5.5]	5.2 [5.2–5.5]
Average Δp [Range] (psi)	5.4 [4.0–6.0]	5.5 [4.0–7.0]	6.2 [5.0–8.0]	4.4 [4.0–6.0]
Throughput (gal)	2,058,000	7,580,000	3,411,000	8,464,000
Media Run Length (BV)[c]	8,240	23,030	10,360	25,720
Media Life (day)	41	149	105	169

(a) Completed when lag tank effluent reached 10 μg/L of arsenic.
(b) Media Run 2a inconclusive due to operational issues (Section 4.4.4).
(c) Media run length in BV calculated based on volume of media in both tanks.

29, 2005 when the AAFS50 media was removed (Section 4.4.5.2). Operational problems associated with tank switching for Media Run 2a (Section 4.4.4) prevented thorough resolution of the data gathered during that period.

After AWC's peak water usage season had ended, Media Run 3 began on October 12, 2005, with 16-hr/day operation and unaltered raw water pH values. The intermittent system operation was accomplished via a timer that was installed and programmed to enable the well to operate automatically from 12:00 a.m. to 4:00 p.m. on a daily basis. The purpose of this media run was to determine how reduced run time and a somewhat longer empty bed contact time (EBCT) of 4.6 min/tank might affect the AAFS50 media's capacity in comparison to Media Run 1, which employed 24 hr/day run time and 3.5 min/tank of EBCT. On January 25, 2006, the treatment system effluent exceeded 10 μg/L of arsenic, and the AAFS50 media was subsequently removed (Section 4.4.5.3).

Media Run 4 began on March 7, 2006, to evaluate the use of ARM 200 media without pH adjustment. The treatment system effluent exceeded 10 μg/L of arsenic on August 23, 2006, but the system continued to operate until September 18, 2006, when the demonstration study was completed.

The system operated for 977, 3,562, 1,653, and 4,065 hr until 10-μg/L arsenic breakthrough from the lag tank during Media Runs 1, 2, 3, and 4, respectively. Operating time was based on full-time operation of POE Well No. 2 until November 4, 2004, when an hour meter was installed to determine system downtime due to repairs and maintenance. The system utilization rate was nearly 100% for Media Runs 1, 2, and 4, and about 67% for Media Run 3.

The average flowrates through the system during all test runs were 36 to 37 gpm (or 5.1 to 5.2 gpm/ft^2), consistent with the design flowrate. Because less media were loaded during the system startup (16.7 instead of 22 ft^3/tank) due to the use of an incorrect bulk density value to calculate the required media shipping weight, the average EBCT during Media Run 1 was reduced from the design value of 4.5 min/tank (Table 4-4) to 3.5 min/tank (or from 9.0 to 6.9 min for both tanks). The average EBCTs for subsequent media runs were 4.4 to 4.6 min/tank (or 8.9 to 9.1 min for both tanks), which were close to the design value.

The pressure differential (ΔP) readings across each tank ranged from 4 to 8 psi, which were 2 to 5 psi higher than the baseline ΔP readings measured during the system startup when hydraulic testing was performed on the empty tanks. This extra pressure loss, caused by the media, equates to 0.9 to 1.7 psi/ft of media. Further, the ΔP readings across each tank between two consecutive backwash events did not increase significantly, indicating minimal accumulation of particulates and/or media fines.

For AAFS50 media, the system throughput at 10-µg/L arsenic breakthrough in the effluent of the lag tank was 2,058,000 gal (or 8,240 BV based on the total volume of media in both tanks) without pH adjustment and reduced EBCT. With pH adjustment, the system treated 7,580,000 gal (or 23,030 BV) when reaching 10 µg/L from the lag tank. Without pH adjustment and with intermittent run time, the throughput was 3,411,000 gal (or 10,360 BV). Media Run 4, using ARM 200 media, treated 8,464,000 gal (or 25,720 BV) without pH adjustment.

4.4.2 pH Adjustment. Upon 10-µg/L arsenic breakthrough from the lag tank on August 4, 2004, during Media Run 1, source water pH was lowered to determine its effect on the arsenic levels in the treated water and media life. A 55-gal drum of 37% H_2SO_4 and a chemical transfer pump were delivered to the site during the weeks of August 16 and 23, 2004, respectively. However, the commencement of acid addition was postponed due, in part, to problems related to a faulty in-line pH electrode, an incorrect output signal from the pH transmitter, and/or an inoperable acid addition pump. After the vendor replaced the in-line pH transmitter and the acid addition pump and corrected the output setting for the pH transmitter, pH adjustment began on September 17, 2004. During October 13 through 18, 2004, pH adjustment was temporarily interrupted and then resumed on October 19, 2004, to continue through Media Run 2 until July 14, 2005. Media Runs 3 and 4 did not employ pH adjustment, except for the brief period from February 2 through 17, 2006, at the end of Media Run 3 in order to consume approximately 23 gal of acid remaining at the site from the previous application.

Acid addition entailed significant complexities. Although the in-line pH transmitter indicated that source water was adjusted to a setpoint of 7.2, readings from the WTW Multi 340i handheld meter indicated pH values ranging from 6.7 to 6.9. After the in-line pH electrode was recalibrated and then replaced, the in-line transmitter still indicated a pH value of 7.2 while the field meter indicated values as high as 7.6. Unable to resolve the discrepancy, the in-line pH transmitter setpoint was reduced to 6.8 and then 6.6 in an attempt to compensate for the difference and maintain a consistent treatment pH value. Throughout Media Run 2, poor correlation existed between the field meter and in-line pH transmitter readings with differences up to 0.5 pH units observed. Problems with pH adjustment also were encountered at several other arsenic demonstration sites using both mineral acid and CO_2 (Valigore et al., 2006).

On average, the system consumed 3.4 gpd of 37% H_2SO_4 until October 1, 2004, and then 2.8 gpd of 50% H_2SO_4 afterwards. The actual average consumption of 50% H_2SO_4 equated to 0.05 gal/1,000 gal of water treated, which was comparable to the theoretical calculations discussed in Section 4.5.1.3.

4.4.3 Backwash. The backwash data for each media run are summarized in Table 4-6. As designed, a set throughput was used to alert the operator to manually initiate system backwash. The throughput value was initially set at 340,000 gal, but incrementally increased to 740,000 and 1,400,000

gal due to little or no pressure loss across the adsorption tanks. Since the last change on the throughput setpoint, backwash was performed monthly except when required to adjust the operation of the recycle pump on September 18, 2004 and for media changeouts. In January 2005, the backwash recycle pump required additional repairs due to damage incurred from uncharacteristically cold weather.

During system startup, the backwash duration was increased from 10–12 to 20 min/tank as a way to compensate for the relatively low backwash flowrate attainable by the system (i.e., 36 gpm [or 5 gpm/ft^2] versus the design value of 55 to 60 gpm [or 8 gpm/ft^2]) for the AAFS50 media. For Media Run 4 using ARM 200, the vendor recommended increasing the backwash flowrate to 42 gpm (or 6 gpm/ft^2) and decreasing the backwash duration to 15 min/tank. This backwash flowrate was initially achieved but could not be sustained (which fluctuated from 34 to 42 gpm). The volumes of wastewater generated during the backwash events ranged from 1,060 to 1,430 gal for the three AAFS50 media runs and from 1,025 to 1,260 gal for the ARM 200 media run. The volumes generated were consistent with the target values of 1,100 to 1,440 and 1,260 gal, respectively, as shown in Table 4-4. Backwash water handling is discussed in Section 4.4.6. Low ΔP readings across the adsorption tanks indicated that the lower-than-design-value hydraulic loading rates were adequate to fully backwash the media (Section 4.4.1).

Table 4-6. Backwash Summary of Kinetico's FA-236-AS Treatment System

Media Run	No. of Backwash Events	Backwash Flowrate (gpm)	Hydraulic Loading Rate (gpm/ft^2)	Backwash Duration[(a)] (min/event)	Wastewater Generated (gal/event)	Total Wastewater Generated (gal)	Recycle Flowrate (gpm)
1	6	27–35	4–5	40	1,060–1,400	7,640	2–3
2	7	33–36	5	40	1,200–1,360	9,160	2
2a	3	34	5	40	1,355–1,370	4,090	2
3	4	34	5	40	1,360–1,430	5,580	2
4	8	30–42	4–6	30–40	1,025–1,260	8,075	2–3

(a) For both tanks.

4.4.4 Tank Switching. Upon 10 µg/L arsenic breakthrough from the lag tank (Tank B) during Media Run 2, arrangements were made to replace the spent AAFS50 media in the lead tank (Tank A) and switch the tank positions on April 29, 2005. Thus, Media Run 2a had Tank B in the lead position (having already treated 9,577,000 gal [or 29,100 BV] of water [based on the total volume of media in both tanks]) and Tank A in the lag position with virgin AAFS50 media. After the first sampling event for Media Run 2a on May 4, 2005, a pneumatic valve upstream of Tank B was found to have been inadvertently opened, causing a portion of the flow to enter Tank A prior to Tank B. After the valve was closed, the system appeared to have operated as designed until mid-May 2005 when a power outage caused the tanks to return to the default setting with Tank A in the lead and Tank B in the lag positions. This tank switching was not realized until approximately one month later on June 10, 2005, when efforts were made to reconcile four sets of "suspicious" treatment plant data that showed essentially untreated water following the lead tank (i.e., Tank B). Careful review of the P&ID revealed that default switching of the tanks had inadvertently resulted in water samples after prechlorination being collected at the TB sampling location and samples after Tank B being collected at the TA sampling location. Figure 4-8 shows the changes in

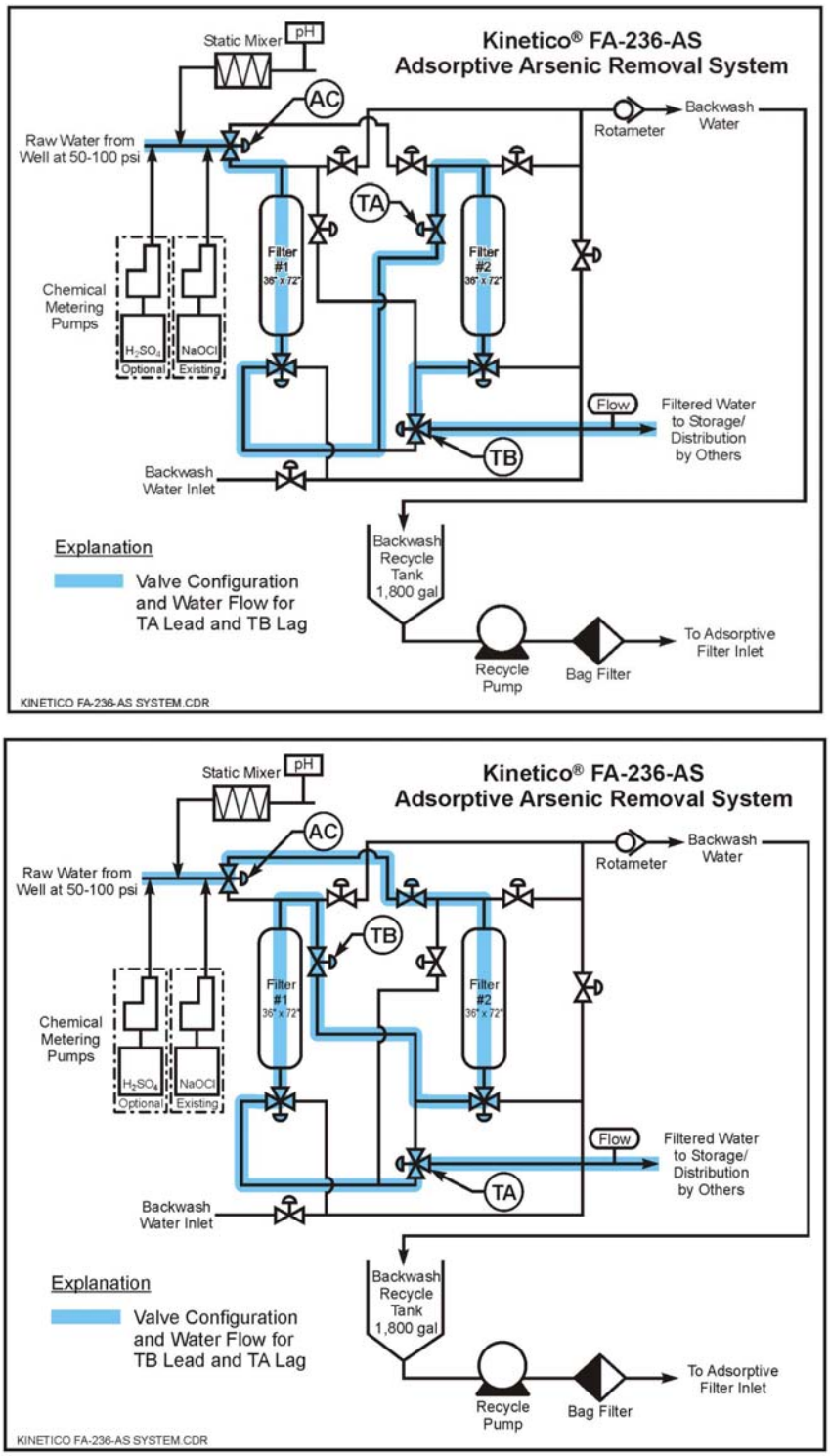

Figure 4-8. Water Flow Paths and Sample Tap Locations with Tank A (Top) and Tank B (Bottom) in the Lead Position

water flow dependent on whether Tank A or B is in the lead position and the different sampling locations which led to difficulties in evaluating the data.

After being informed of the problem, the vendor installed a UPS and revised the PLC to return the tanks to their prior positions rather than their default positions should power interruption recur. Thus, after media replacement, Media Run 3 began on October 12, 2005, with these safeguards in place and Tank B in the lead position. No further problems were experienced with unexpected tank switching through the duration of the study.

4.4.5 Media Loading and Removal. Media changeouts were performed by Fann Environmental, Kinetico's subcontractor, on October 25, 2004, April 29, 2005, July 29, 2005, and February 28, 2006. Before the removal of spent media, the heights of the freeboard, as measured from the flange at the top of the tanks to the top of the media beds, were recorded and summarized in Table 4-7. The spent media were sampled and removed from each tank as described in Section 3.3.5 after the tanks had been drained and pumps and isolation valves had been turned off. The tanks were rinsed and any remaining media removed from the bottom. Each tank was then half filled with chlorinated water before virgin media were poured through a large funnel from the top of the tank. The tank was then completely filled with water, and the media were allowed to soak for at least 1 hr. After the media were properly backwashed and freeboard measurements obtained, the system was returned to service. Spent ARM 200 media samples also were collected at the end of Media Run 4. The media were not replaced at this time due to the completion of the demonstration study.

4.4.5.1 Media Run 1. Although 22 ft^3 of AAFS50 media was planned for each tank, only 16.7 ft^3 was loaded for Media Run 1 on May 11, 2004 due, in part, to the use of an incorrect bulk density value, and, thus, the media shipping weight, when ordering the media by the vendor (Table 4-3). The freeboard measurements for Media Run 1 agreed with this reduced bed volume. Media Run 1 began on June 24, 2004, and the spent media was replaced on October 25, 2004.

4.4.5.2 Media Runs 2 and 2a. Media Run 2 began on October 25, 2004, with 22 ft^3 of AAFS50 media in each tank and with pH adjustment. Because the media capacity and run length were significantly increased with pH adjustment, as the system effluent approached 10 μg/L of arsenic, arrangements were made to replace the media in the lead tank (Tank A) as discussed in Section 4.2. Thus, Media Run 2a began on April 29, 2005, with Tank B containing partially spent media in the lead position and Tank A containing virgin media in the lag position. The media installer reported filling Tank A to the previous freeboard level, presumably 27 in with 22 ft^3 of media, which corresponded well to that of the previous media loading on October 25, 2004. However, a larger-than-expected freeboard level of 38.5 in was measured for Tank A at the time of media removal on July 29, 2005. After checking with the vendor, a logistical error was recognized, in which half of the media originally shipped for Media Run 1 (i.e., 16.7 ft^3) was ordered for Media Run 2a. Therefore, Media Run 2a operated with 22 ft^3 of media in Tank B and 16.7 ft^3 of media in Tank A. The media of both tanks were removed on July 29, 2005.

4.4.5.3 Media Run 3. Tank A was loaded with AAFS50 media on July 29, 2005. Before Tank B was about to be loaded, AWC decided to continue operating POE Well No. 2 full-time during the summer months. Because Media Run 3 was scheduled to operate the system intermittently for 16 hr and then rest for 8 hr on a daily basis, decisions were made to delay the media loading of Tank B and to bypass the treatment system until after the peak season had passed. In the meantime, several operational issues as discussed in Section 4.4.4 were investigated, and a UPS and a timer to allow for 16 hr/day system operation were installed. After Tank B media loading on September 19, 2005, it was discovered that insufficient media *again* was loaded into the tanks (i.e., 16.7 instead of 22 ft^3/tank) because of the same logistical error made during Tank A rebedding for Media Run 2a. The balance of media volume (i.e., 5.3 ft^3/tank) was shipped to the site and installed on September 22, 2005.

Table 4-7. Media Loading, Removal, and Freeboard Measurements

Media Run No.	Media Loading Date	Media Volume (ft^3)	Media Type	Tank (A/B)	Freeboard at Fill (in)	Media Removal Date	Freeboard at Removal (in)	Freeboard Difference (in)
1	05/11/04	16.7	AAFS50	A	39.3	10/25/04	39.5	0.2
	05/11/04	16.7	AAFS50	B	39.3	10/25/04	40.5	1.2
2	10/25/04	22	AAFS50	A	27.3	04/29/05	32.0	4.7
	10/25/04	22	AAFS50	B	27.3	07/29/05	30.0	2.7
2a	04/29/05	16.7	AAFS50	A	NA	07/29/05	38.5	NA
3	07/29/05[(a)]	(16.7) 22	AAFS50	A	(38.5) 28.5	02/28/06	29.0	0.5
	09/19/05[(a)]	(16.7) 22	AAFS50	B	(38.0) 28.5	02/28/06	29.0	0.5
4	02/28/06[(b)]	(25) 22	ARM 200	A	(21.5) 27.0	NA[(c)]	26.8[(c)]	0.2
	02/28/06[(b)]	(25) 22	ARM 200	B	(21.5) 27.0	NA[(c)]	26.3[(c)]	0.7

(a) Tanks initially loaded with 16.7 ft^3 of media. Additional media loaded on 09/22/05.
(b) Tanks initially loaded with 25 ft^3 of media. Excess media removed on 03/07/06.
(c) Freeboard measurements collected on 10/19/06 during spent media sampling. Media removal to be performed at AWC's discretion.

The intermittent media run began on October 12, 2005, with Tank B in the lead position. No pH adjustment was performed for this run. The spent media was removed on February 28, 2006.

4.4.5.4 Media Run 4. Both tanks were loaded with ARM 200 media on February 28, 2006. Freeboard levels of 21.5 in were measured for both tanks, indicating overloading of approximately 3 ft^3/tank. In order to maintain a consistent operating scenario, the excess was removed from the top of each tank on March 7, 2006. The removed media contained a significant amount of media fines, which might not have been thoroughly backwashed due to the relatively low backwash flowrate used. Media Run 4 was conducted with 22 ft^3 of ARM 200 media in each tank, 24 hr/day operation, and unaltered pH. Figure 4-9 shows the initial and final media levels as seen through the top viewglass, as well as clarity of water produced during a backwash prior to system restarting. The ARM 200 media required more thorough backwashing than the AAFS50 media. Approximately 6 BV (plus an additional 2.5 BV after the bed depth was corrected) were required to prepare the ARM 200 media for service compared to 4 to 5 BV for the AAFS50 media. In addition, iron and turbidity levels of 319 μg/L and 23 nephlemetric turbidity units (NTU), respectively, in Tank A effluent on March 8, 2006, suggested that media fines, as observed above, might not have been adequately flushed from the tank during the initial backwashing of the ARM 200 media. The system was turned off on September 18, 2006, and the media changeout will be performed at AWC's discretion.

Figure 4-9. Media Run 4 Changeout Photographs
(Left to Right: Initial ARM 200 Media Level through Viewglass, Backwash Water Clarity, and Media Level after Excess Media Removal)

4.4.6 Residual Management. The system's backwash water recycling capabilities (Section 4.2) enabled reclaim of nearly 100% of the wastewater generated. Recycling was accomplished by blending the wastewater with source water at 2 to 3 gpm. Although lower than the design value of 3.7 gpm (i.e., 10% of the influent flowrate), no effort was made to increase the recycle flowrate as it was not critical to system performance. Due to the limited capacity of the recycle tank, wastewater was discharged to a ditch when multiple backwash cycles were required during media changeouts. The amount of wastewater discharged totaled 3,000 to 5,000 gal (or 8 to 14% of the total wastewater volume). Although a larger recycle tank could have reduced or eliminated wastewater discharge to the ditch, the tank provided was adequate for routine backwash cyles. Only a minimal amount of solids settled out in the recycle tank; therefore, removal and disposal of these solids were not necessary during the study.

The quantifiable residuals produced by operation of the treatment system were 2,200, 4,000, and 2,900 lb of spent AAFS50 media during Media Runs 1, 2 and 2a, and 3. Approximately 2,200 lb of spent ARM 200 media were produced from Media Run 4; removal of the spent media was at AWC's discretion. Both media types passed TCLP tests (Section 4.5.4), and the AAFS50 media was disposed of at a sanitary landfill.

4.4.7 Reliability and Simplicity of Operation. Relatively rapid arsenic breakthrough during Media Runs 1 and 3 (Section 4.5.1.1), pH adjustment (Section 4.4.2), and tank switching during Media Run 2a (Section 4.4.4) were the primary sources of concern during this performance evaluation study. Other O&M issues encountered were problems with the chlorine injector, the backwash recycle pump, and a broken inlet bag filter pressure gauge due to unusually cold weather in late November 2005. A minimal amount of unscheduled downtime was necessary to repair system components as discussed above. Scheduled downtime for each media changeout was approximately 12 hr. The total amount of unscheduled and scheduled downtime due to repairs and/or maintenance was no more than 1% of the total system run time.

4.4.7.1 Pre- and Post-Treatment Requirements. For disinfection purposes, NaOCl was initially injected downstream of the system to provide a target chlorine residual of 0.4 to 0.5 mg/L (as Cl_2) at the entry point to the distribution system. On July 27, 2004, after algae growth was observed on a viewglass of the lead tank, the NaOCl injection point was relocated upstream of the system to prevent biological growth and provide disinfection throughout the treatment system. In addition to tracking the depth of the NaOCl solution in the chemical day tank daily, the operator verified adequate chlorine residuals weekly.

Acid addition using a 37 to 40% H_2SO_4 solution was employed at the end of Media Run 1 and throughout Media Runs 2 and 2a, but not during Media Runs 3 and 4. The purpose of the acid addition was to lower source water pH to a target value of 7.2 in order to improve the adsorptive capacity of the AAFS50 media. During periods of acid addition, the operator tracked the depth of acid in the day tank and verified the in-line pH transmitter setting daily. Weekly pH measurements using a field meter also were collected for comparison to in-line pH transmitter readings.

4.4.7.2 System Automation. The FA-236-AS was semi-automatically controlled by the PLC in the central control panel. The panel contained a touch screen OIP that monitored system parameters, established system setpoints, checked alarm status, and switched tank positions (i.e., from lead to lag and vice versa). The control panel provided a signal when backwash and media changeout were due based upon the respective throughput setpoints. The media changeout setpoint was not utilized because changeout was performed based on arsenic breakthrough. However, the adjustable media changeout setpoint could be a valuable tool to facilities that have already estimated an arsenic breakthrough throughput after operating their systems under consistent scenarios for several media runs. The OIP enabled the operator to initiate the automatic backwash sequence and switch tank positions with a push-button. Additional automated features included pH adjustment and backwash water recycling. The acid

addition pump was a flow-paced pump, which was controlled by the pH transmitter based on the pH value and flowrate of the water entering the adsorption tanks. The backwash recycle pump was controlled by level sensors within the 1,800-gal reclaim tank.

4.4.7.3 Operator Skill Requirements. Under normal operating conditions, the daily demand on the operator was typically 5 to 10 min for visual inspection of the system and recording of operational parameters on the log sheets. Acid addition increased the daily demand to 20 to 30 min for associated O&M requirements, such as chemical supply coordination, pH probe calibration and maintenance, feed pump repair and maintenance, drum neutralization and disposal, safety precautions, and troubleshooting.

In Arizona, operator certifications are classified by grade on a scale of 1 (least complex) to 4 (most complex) according to facility type, size, complexity, and population served (ADEQ, 2005). Minimum grades of 3 for treatment and 2 for distribution were required. AWC's primary operator for this system was certified for Water Distribution Grade 4 and Water Treatment Grade 4. After receiving proper training by the vendor during the system startup, the operator understood the PLC, knew how to use the OIP, and was able to work with the vendor to troubleshoot and perform minor on-site repairs.

4.4.7.4 Preventative Maintenance. Preventative maintenance tasks recommended by the vendor included daily recording of pressures, flows, and chemical drum levels and visual checks for leaks, overheating components, and manual valves' positions. The vendor also recommended weekly checks for trends in the recorded data that might indicate a decline in system performance, as well as monthly in-line pH probe cleaning and calibration, bag filter replacement, and pumps lubricant level monitoring.

4.4.7.5 Chemical/Media Handling and Inventory Requirements. AWC coordinated the NaOCl supply and refilled the drum on an as-needed basis. H_2SO_4 was supplied in 55-gal drums by Univar's Phoenix, AZ facility. Generally, two drums were shipped at a time and replacement drums were ordered once the second drum was opened; each drum typically lasted for 2 to 3 weeks. Univar did not offer refundable drum deposits for 50% H_2SO_4, so Fann Environmental was hired to neutralize and dispose of empty drums. Although the chemical handling requirement was increased, the arsenic removal capacity of the AAFS50 media was greatly extended from 41 days during Media Run 1 to 149 days during Media Run 2 with full-time system operation. The extended media run length significantly reduced the media handling needs. Chemical and media handling requirements were further reduced via the use of ARM 200 media, which demonstrated a media life of 169 days of full-time operation without pH adjustment.

4.5 System Performance

4.5.1 Treatment Plant Sampling. The treatment plant water was sampled on 81 occasions (including five duplicate events), with field speciation performed 13 times. Results of samples collected from the AC, TA, and TB sampling locations during Media Run 2a are not included in this discussion due to unintentional tank switching caused by a power outage and a resulting tank position switch (Section 4.4.4). Table 4-8 summarizes the results of As, Fe, Mn, and Al at the IN, TA, and TB sampling locations. Table 4-9 summarizes the results of the other water quality parameters including those measured on-site at the IN, AC, TA, and TB sampling locations, with alkalinity, pH, and sulfate presented both without and with acid addition. Except for these analytes, the data showed little variation throughout the demonstration study (whether using AAFS50 with or without pH adjustment or ARM 200), as evident by the small standard deviations observed. Appendix B contains a complete set of the analytical results including those collected during Media Run 2a.

Table 4-8. Summary of Arsenic, Iron, Manganese, and Aluminum Results for Media Runs 1, 2, 3, and 4[a]

Parameter (Figure, if any)	Sampling Location	Sample Count	Concentration (µg/L)			Standard Deviation
			Minimum	Maximum	Average	
As (total) (Figure 4-10)	IN	81	23.5	49.8	39.4	4.3
As (soluble)	IN	13	35.5	47.4	40.3	4.0
As (particulate)	IN	13	<0.1	0.8	0.3	0.3
As(III)	IN	13	<0.1	1.7	0.6	0.4
As(V)	IN	13	35.1	46.7	39.7	3.8
Fe (total)	IN	81	<25	144	<25	15.1
	TA	70[b]	<25	55.1	<25	6.9
	TB	71	<25	52.7	<25	6.8
Fe (soluble)	IN	13	<25	<25	<25	0.0
	TA	12	<25	25.0	<25	3.6
	TB	12	<25	<25	<25	0.0
Mn (total)	IN	81	<0.1	60.2	1.0	6.7
	TA	71	<0.1	4.0	0.3	0.6
	TB	71	<0.1	19.2	0.8	2.7
Mn (soluble)	IN	13	<0.1	0.3	0.1	0.1
	TA	12	<0.1	2.4	0.3	0.7
	TB	12	<0.1	2.8	0.4	0.8
Al (total)[c]	IN	64	<10	22.0	<10	2.2
	TA	54	<10	41.9	<10	6.5
	TB	54	<10	23.7	<10	3.9
Al (soluble)[c]	IN	11	<10	<10	<10	0.0
	TA	10	<10	14.2	<10	2.9
	TB	10	<10	13.0	<10	2.5

(a) Data from Media Run 2a collected from 05/04/05 through 07/06/06 omitted due to issues associated with tank switching (Section 4.4.4). Statistics of data related to breakthrough curves (i.e., arsenic for TA and TB) not meaningful and, therefore, not presented.
(b) One outlier (i.e., 319 µg/L on 03/08/06) omitted (Section 4.4.5.4).
(c) Measured during Media Runs 1, 2, and 3 only due to use of AAFS50 media.
See Appendix B for complete analytical results.
One-half of detection limit used for nondetect results and duplicate samples included for calculations.

4.5.1.1 Arsenic. Total arsenic concentrations in source water ranged from 23.5 to 49.8 µg/L and averaged 39.4 µg/L, with As(V) as the predominant species (Table 4-8). Only trace amounts of particulate As and As(III) existed. The arsenic concentrations measured during this demonstration study were consistent with those of the source water sample collected on July 31, 2003 (Table 4-1).

Figure 4-10 shows the arsenic breakthrough curves for each media run, presented according to volume throughput with the number of bed volumes noted for arsenic breakthrough at 10 µg/L, based on linear extrapolation, following the lead and lag tanks. Bed volumes following the lead tank were calculated based on the amount of media in the lead tank only; however, bed volumes following the lag tank were calculated based on the combined media volume of both tanks since water exiting the lag tank had been treated by this entire system. pH values of water prior to entering the adsorption tanks also are shown in

Table 4-9. Summary of Other Water Quality Parameter Results for Media Runs 1, 2, 3, and 4[a]

Parameter (Figure, if any)	Sampling Location	Unit	Sample Count	Minimum	Maximum	Average	Standard Deviation
Alkalinity[b] (as $CaCO_3$) (Figure 4-13)	IN	mg/L	80	138	195	168	11
	TA	mg/L	41/29	156/112	185/163	169/136	8/15
	TB	mg/L	41/29	151/112	185/174	169/134	9/16
Fluoride	IN	mg/L	13	<0.1	0.1	<0.1	0.0
	TA	mg/L	12	<0.1	0.1	<0.1	0.0
	TB	mg/L	12	<0.1	0.1	<0.1	0.0
Sulfate[b] (Figure 4-13)	IN	mg/L	13	6.8	11	9.2	1.6
	TA	mg/L	7/5	8.1/31	14/60	10/46	2.2/12
	TB	mg/L	7/5	8.1/31	12/60	10/44	1.7/11
Orthophosphate (as P)	IN	mg/L	27	<0.05	<0.10	<0.05	0.0
	TA	mg/L	27	<0.05	<0.10	<0.05	0.0
	TB	mg/L	27	<0.05	<0.10	<0.05	0.0
Phosphorus (as P)	IN	µg/L	27	<10	45.2	10.9	9.5
	TA	µg/L	27	<10	23.6	<10	5.0
	TB	µg/L	27	<10	30.4	<10	5.5
Silica (as SiO_2) (Figure 4-14)	IN	mg/L	81	15.7	21.2	19.0	0.8
Nitrate (as N)	IN	mg/L	13	0.8	1.2	1.0	0.2
	TA	mg/L	12	0.7	1.3	0.9	0.2
	TB	mg/L	12	<0.04	1.2	0.9	0.3
Turbidity	IN	NTU	80	<0.1	0.7	0.2	0.1
	TA	NTU	70[c]	<0.1	0.5	0.2	0.1
	TB	NTU	71	<0.1	0.7	0.2	0.2
pH[b] (Figure 4-13)	IN	S.U.	71	7.5	8.4	7.7	0.1
	AC	S.U.	30/27	7.6/6.6	7.9/7.6	7.7/6.9	0.1/0.2
	TA	S.U.	34/27	7.4/6.7	7.9/7.5	7.6/6.9	0.1/0.2
	TB	S.U.	34/27	7.3/6.7	7.8/7.5	7.6/6.9	0.1/0.2
Temperature	IN	ºC	71	18.1	25.0	19.9	1.0
	AC	ºC	58	18.9	21.1	19.8	0.5
	TA	ºC	62	18.3	22.4	19.9	0.6
	TB	ºC	62	18.8	23.3	19.9	0.7
DO	IN	mg/L	67	5.1	6.5	5.7	0.4
	AC	mg/L	54	4.7	6.5	5.5	0.4
	TA	mg/L	58	4.8	6.3	5.5	0.4
	TB	mg/L	58	4.5	6.4	5.5	0.4
ORP[d]	IN	mV	63	151	313	231	36
	AC	mV	54	560	754	644	52
	TA	mV	54	538	776	676	52
	TB	mV	54	555	781	691	52
Free Chlorine[d] (as Cl_2)	AC	mg/L	58	0.0	1.0	0.5	0.2
	TA	mg/L	58	0.0	0.8	0.4	0.1
	TB	mg/L	58	0.0	0.8	0.4	0.1
Total Chlorine[d] (as Cl_2)	AC	mg/L	58	0.0	0.9	0.5	0.2
	TA	mg/L	57	0.0	0.8	0.5	0.1
	TB	mg/L	58	0.0	0.8	0.5	0.1
Total Hardness (as $CaCO_3$)	IN	mg/L	13	131	193	168	19
	TA	mg/L	12	133	197	165	18
	TB	mg/L	12	136	200	166	17
Ca Hardness	IN	mg/L	13	66.2	112	92.4	13

Table 4-9. Summary of Other Water Quality Parameter Results for Media Runs 1, 2, 3, and 4[(a)] (Continued)

Parameter (Figure, if any)	Sampling Location	Unit	Sample Count	Minimum	Maximum	Average	Standard Deviation
(as $CaCO_3$)	TA	mg/L	12	69.6	106	90.6	10
	TB	mg/L	12	68.3	104	91.4	10
Mg Hardness (as $CaCO_3$)	IN	mg/L	13	59.8	100	75.2	10
	TA	mg/L	12	54.4	105	74.6	12
	TB	mg/L	12	55.5	107	75.0	12

(a) Data from Media Run 2a (05/04/05-07/06/06) not included for AC, TA, or TB due to issues associated with tank switching (Section 4.4.4). Statistics of data related to breakthrough curves (i.e., silica for TA and TB) not meaningful and, therefore, not presented.
(b) Values without (06/24/04-09/16/04; 10/19/05-09/06/06)/with (09/17/04-04/27/05) pH adjustment. Data from 10/13/04 omitted as pH adjustment was temporarily interrupted.
(c) One outlier (i.e., 23 NTU on 03/08/06) omitted (Section 4.4.5.4).
(d) Measurements since prechlorination began on 07/27/04. Leaks in injection system occasionally caused 0 mg/L chlorine residuals.

See Appendix B for complete analytical results.
One-half of detection limit used for nondetect results and duplicate samples included for calculations.

Figures 4-10a and 4-10b for Media Runs 1 and 2, respectively, which employed pH adjustment to improve the media's performance. The recurring difficulties experienced during acid addition are denoted by "Δ" and tracked numerically from 1 to 10 along the pH curves. The actions taken during these annotations are summarized in Table 4-10. Figure 4-11 presents the run lengths of the lead and lag tanks for the four media runs (based on linear extrapolation) and some of the conditions affecting them.

During Media Run 1, arsenic concentrations at TA reached 10 µg/L at about 6,870 BV, less than three weeks after system startup. After another three weeks, arsenic concentrations at TB also reached 10 µg/L at about 8,240 BV. Slightly longer media run lengths were observed during Media Run 3, which also used AAFS50 media without pH adjustment. Because intraparticle mass transport is believed to be a rate-limiting step (Badruzzaman et al., 2004; Lin and Wu, 2001), the intermittent system operation (i.e., 16 versus 24 hr/day) and slightly longer EBCT (i.e., 4.6 versus 3.5 min/tank) might have facilitated and improved pore diffusion by allowing additional time for arsenic on the media surface to move into the pores and provide more easily accessible sites for adsorption, thus extending the run lengths to 7,380 and 10,360 BV at TB and TA, respectively. (Note that Tank B was the lead tank during Media Run 3.) Relatively high pH values of source water (ranging from 7.7 to 7.9 [Table 4-9]) presumably led to the early arsenic breakthrough during both runs.

After Media Run 1, pH adjustment of source water began on September 17, 2004 (denoted as Δ1 in Figure 4-10a) so that the effect of lowering pH from about 7.8 to 6.8 might be examined. Acid addition progressively reduced arsenic concentrations at TA from 33.5 µg/L (two days before acid addition began) to as low as 20.2 µg/L (12 days after acid addition began), and similarly at TB, from 26.0 to 12.3 µg/L. As shown in Figure 4-12, the reduced pH of the media surface exposed more positively charged sites for arsenic adsorption. The acid addition, however, was not able to bring the system effluent to below 10 µg/L. During October 13 through 18, 2004, the pH adjustment was temporarily interrupted (denoted as Δ2 in Figure 4-10a), whereupon the arsenic concentration at TA returned immediately to that of source water. As the pH of the media surface moves back towards the zero point of charge (zpc), electrostatic attraction between the media and anionic As(V) species greatly diminishes, which significantly reduces

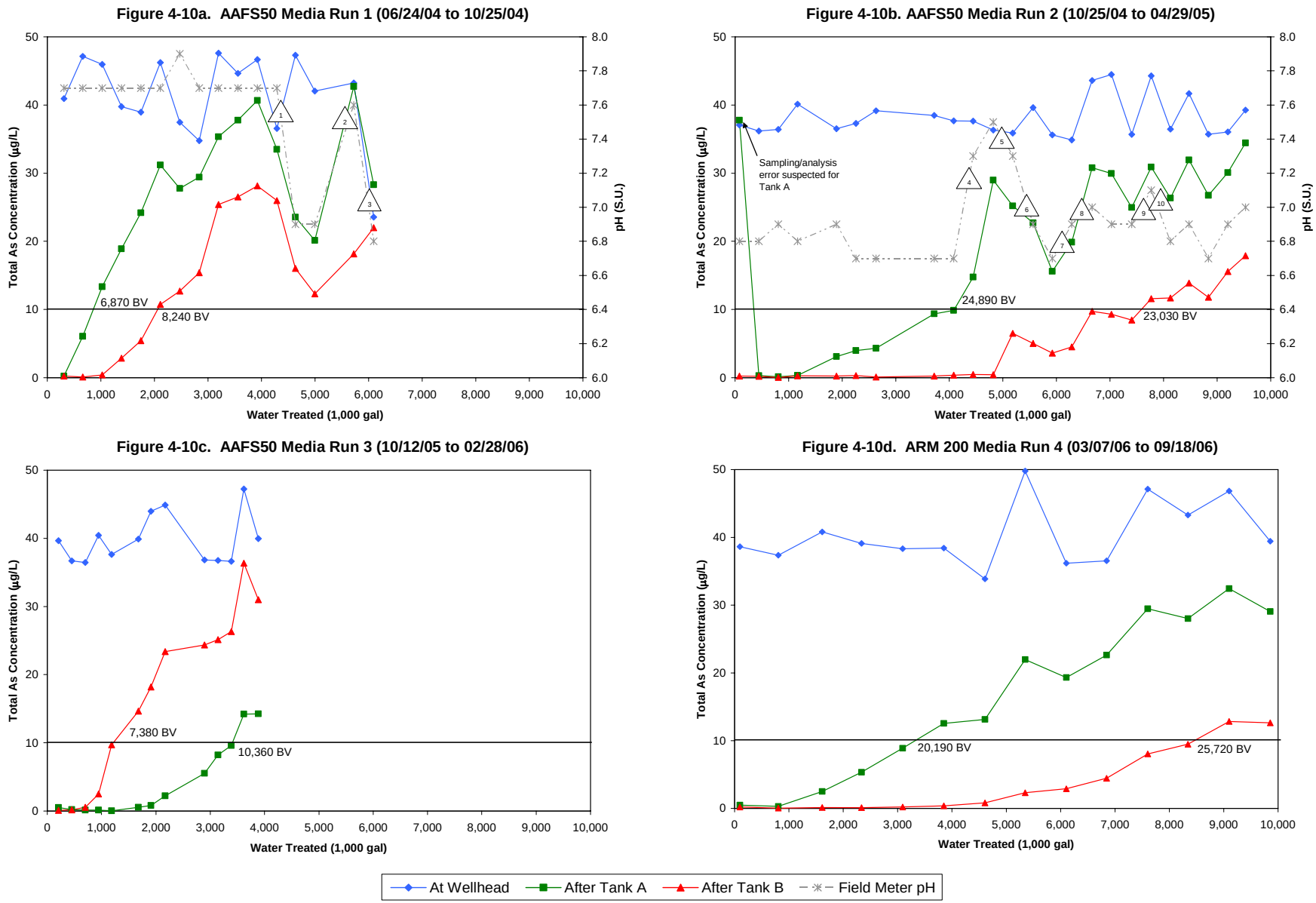

Figure 4-10a-d. Total Arsenic Concentrations Through Treatment System During Media Runs 1 to 4

Table 4-10. Actions Taken for pH Adjustment During Media Runs 1 and 2

Item	Date	Action
1	09/17/04	pH adjustment initiated at in-line pH transmitter setpoint of 7.2 after in-line pH transmitter and acid pump replaced and output setting for pH transmitter corrected
2	10/13/04	pH adjustment temporarily turned off
3	10/19/04	pH adjustment resumed
4	01/18/05	In-line pH probe calibrated
5	02/01/05	In-line pH electrode replaced
6	02/07/05	In-line pH transmitter setpoint changed to 6.8 to agree with previous field meter pH
7	02/18/05	In-line pH transmitter setpoint changed to 6.9 to conserve acid during pump leak
8	03/02/05	In-line pH transmitter setpoint reduced to 6.8 after pump leak fixed
9	03/17/05	pH electrode calibrated
10	03/24/05	In-line pH transmitter setpoint changed to 6.6 to compensate for high field meter pH

Note: Item number corresponds to callout in Figures 4-10a, 4-10b, and 4-14.

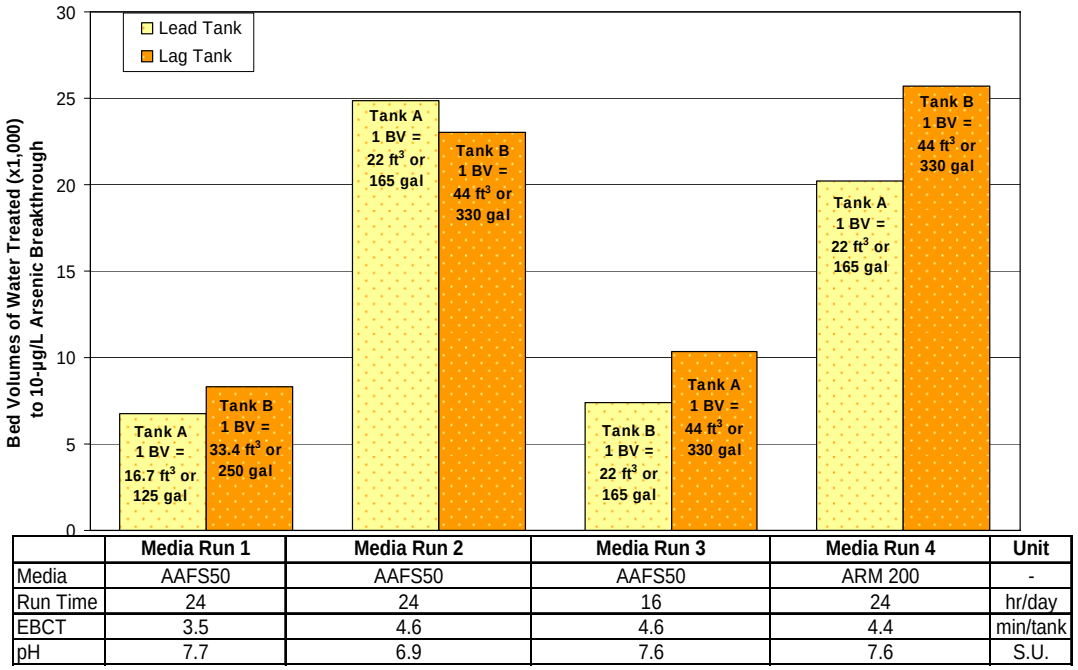

	Media Run 1	Media Run 2	Media Run 3	Media Run 4	Unit
Media	AAFS50	AAFS50	AAFS50	ARM 200	-
Run Time	24	24	16	24	hr/day
EBCT	3.5	4.6	4.6	4.4	min/tank
pH	7.7	6.9	7.6	7.6	S.U.

Figure 4-11. Comparison of Media Run Lengths

the media's capacity (Aragon et al., 2002; Chwirka et al., 2000; Clifford, 1999). The arsenic concentration at TB also increased, but not as dramatically as that of TA. This difference was likely attributable to the degree of arsenic loading on the media in each tank in combination with the different pH values measured during sampling – the pH value at TA was only 0.1 unit lower whereas the pH at TB was 0.3 units lower than the source water (Appendix B). Because sampling and on-site pH measurements

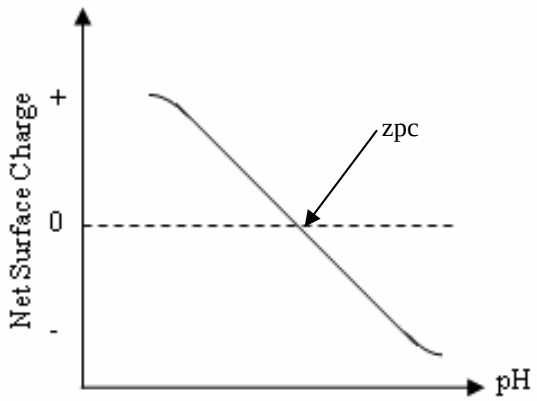

Figure 4-12. Relationship Between pH and Surface Charge of Media
(Modified from Stumm and Morgan, 1981)

at TA and TB were performed shortly after acid addition had been suspended, it was likely that the media pores and surface remained more acidic than source water as the higher pH flow passed through the adsorption tanks. After acid addition resumed on October 19, 2004 (denoted as Δ3), the arsenic concentration at TA again decreased as the media surface became increasingly positive.

Media Run 2 with pH adjustment began on October 25, 2004. The AAFS50 media, with influent pH values reduced to an average value of 6.9, treated approximately 24,890 and 23,030 BV of water at TA and TB, respectively, until reaching 10 µg/L of arsenic breakthrough. In doing so, the media outperformed the vendor-estimated working capacity of 18,680 BV (Table 4-4). If consistent operating conditions had been applied throughout the run, the run length of the system as a whole (i.e., 23,030 BV) should have been greater than that of the lead tank (i.e., 24,890 BV) (Figure 4-11) due to more complete utilization of the media in the lead tank and longer EBCT. Nonetheless, pH adjustment of source water was more beneficial to the AAFS50 media run length than were longer EBCT and/or intermittent system operation. Throughout the media run, pH again played a dominant role on the media performance. Figure 4-10b demonstrates the effect of pH on the treated water arsenic concentrations with increases in pH corresponding to increases in arsenic concentration. Section 4.4.2 and Table 4-10b also provide more details on the pH fluctuations and inherent O&M difficulties, as denoted by Δ4 to Δ10. These pH issues during the second half of Media Run 2 most certainly resulted in reduced capacity of the media from 10-µg/L breakthrough from the lead tank to 10-µg/L breakthrough from the lag tank.

Media Run 4, evaluating ARM 200 media, began on March 7, 2006. Arsenic breakthrough occurred at 20,190 and 25,720 BV at TA and TB, respectively. This media run demonstrated the most gradual trend of arsenic breakthrough of the four media runs and was just shy of the vendor prediction of 26,000 BV shown in Table 4-4. ARM 200 media outperformed AAFS50 media (even with pH adjustment), but also was more costly per unit of water treated (Section 4.6.2).

4.5.1.2 Iron, Manganese, and Aluminum. Low concentrations of total and soluble iron and manganese existed in source water and throughout the treatment train. One of several exceptions occurred on March 8, 2006 (i.e., 319 µg/L Fe at TA), immediately after Media Run 4 commenced (Section 4.4.5.4). Total aluminum concentrations were mostly <10 µg/L, but were observed at concentrations up to 41.9 and 23.7 µg/L at TA and TB, respectively. Although the presence of aluminum might indicate some leaching from the AAFS50 media, all concentrations were below the secondary maximum contaminant level (SMCL) of 0.05 to 0.2 mg/L.

4.5.1.3 Alkalinity, Sulfate, and pH. Average source water alkalinity, sulfate, and pH values were 168 mg/L (as $CaCO_3$), 9.2 mg/L, and 7.7, respectively (Table 4-9). These values were consistent throughout the treatment train except for samples collected from September 17, 2004, through July 13, 2005. During this period of pH adjustment, acid addition reduced pH values to an average of 6.9, decreased alkalinity values to an average of 136 mg/L (as $CaCO_3$), and increased sulfate levels to an average of 46 mg/L at TA (Table 4-9 and Figure 4-13). Concentrations at TA were similar to those measured at TB, indicating that AAFS50 media had little or no effect on these analytes. It was clear that pH was the single most influential factor affecting the arsenic adsorptive capacity of AAFS50 media, as evident by the arsenic breakthrough curves with and without pH adjustment (Figures 4-10a-c). pH adjustment was not employed while evaluating the performance of ARM 200 media.

The actual consumption of 50% H_2SO_4 was 0.05 gal/1,000 gal, which was similar to that derived from a theoretical calculation (Rubel, 2003) (Table 4-11). The actual alkalinity reduction (i.e., 32 mg/L [as $CaCO_3$]) and sulfate increase (i.e., 37 mg/L) also were similar to the theoretical values of 29 mg/L (i.e., free CO_2 increase) and 31 mg/L, respectively, as shown in Table 4-11.

4.5.1.4 Silica. Silica removal was observed immediately after the start of Media Runs 1 and 2 (Figure 4-14). Within a couple of months, silica levels in the effluent of the adsorption tanks approached influent concentrations. Similar observations also were made for Media Run 3 (using AAFS50) and Media Run 4 (using ARM 200). After pH adjustment began on September 17, 2004, silica levels in the treatment tanks' effluent exceeded influent concentrations, presumably due to desorption of silica from AAFS50 media at lower pH values. The effect of pH on silica removal was observed again in October 2004 when acid addition was temporarily interrupted and from January through March 2005 due to ongoing problems with the pH adjustment equipment (Section 4.4.2). Actions affecting the pH values and thereby affecting the silica concentration as denoted by $\Delta 1$ to Δ 10 in Figure 4-14 are presented in Table 4-10.

4.5.1.5 DO, ORP, and Chlorine. Source water from POE Well No. 2 was rather aerated as indicated by the relatively high DO concentrations (ranging from 5.1 to 6.5 mg/L) and ORP readings (ranging from 151 to 313 millivolts [mV]). These measurements may explain why little or no As(III) was present in source water. As a result of prechlorination, the ORP readings at AC, TA, and TB increased significantly to the range of 538 to 781 mV.

The chlorine residuals measured at TA and TB were slightly lower than those measured at AC. Little or no chlorine was consumed by AAFS50 media, but some consumption was observed at the beginning of Media Run 4 using ARM 200 media. Initially, no residual was detected after the adsorption tanks, so the operator increased the chlorine dosage from 0.5 to 1.0 mg/L until chlorine breakthrough occurred after approximately 1,000 BV at TA. The chlorine dosage was reduced to 0.5 mg/L after approximately 4,600 BV when residuals at TA and TB reached those of AC.

4.5.1.6 Other Water Quality Parameters. Fluoride, orthophosphate, nitrate, turbidity, temperature, and hardness concentrations remained consistent across the treatment train and did not appear to be affected by the prechlorination, acid addition, or media. Fluoride and orthophosphate concentrations were near and/or below the detection limit for all samples. Turbidity levels were generally low across the treatment train (i.e., 0.2 NTU on average) except on March 8, 2006 (i.e., 23 NTU at TA), immediately after Media Run 4 commenced (Section 4.4.5.4). Total hardness ranged from 131 to 200 mg/L (as $CaCO_3$) (Table 4-9), consisting of approximately 54% Ca hardness and 46% Mg hardness.

4.5.2 Backwash Water Sampling. The analytical results of the backwash water samples are presented in Table 4-12. (Note that Sampling Events 10 through 14 followed a modified sampling procedure as described in Section 3.3.3.) Because treated water was used for backwash, pH values of the

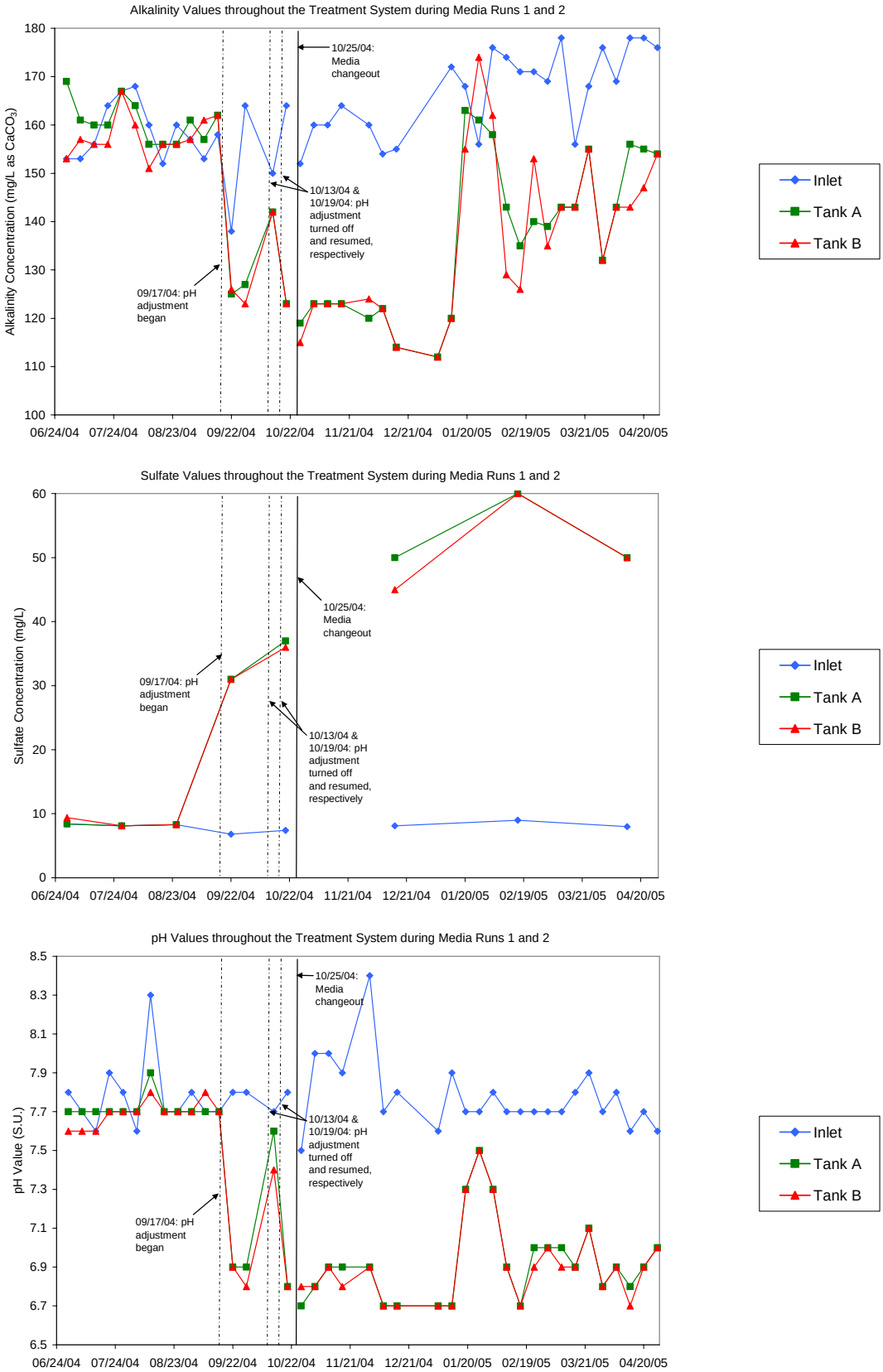

Figure 4-13. Alkalinity, Sulfate, and pH Values During Media Runs 1 and 2

Table 4-11. Theoretical Calculation of Acid Consumption for pH Adjustment

Parameter	Unit	Source Water Value	pH Adjusted Value
pH	S.U.	7.7	6.9
Alkalinity	mg/L[(a)]	168	136
Free CO_2	mg/L	6	35
Alkalinity Reduction	mg/L[(a)]	32	
Acid Required	meq/L	0.64	
H_2SO_4 Required	mg/L	31	
50% H_2SO_4 Required	lb/1,000 gal	0.52	
50% H_2SO_4 Required	gal/1,000 gal	0.04	

(a) As $CaCO_3$.

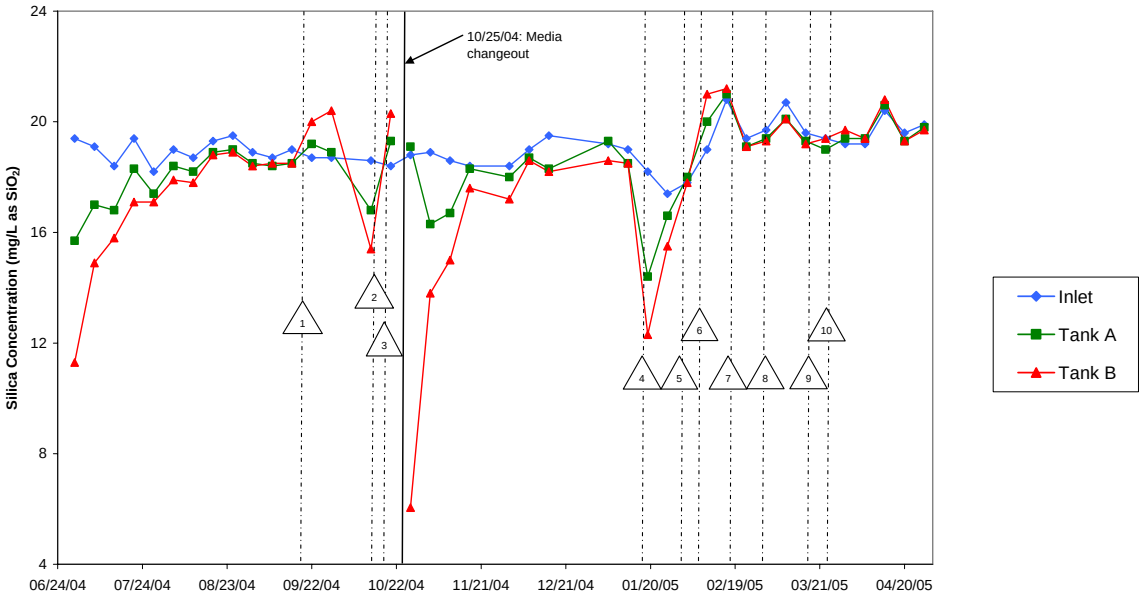

Figure 4-14. Silica Concentrations During Media Runs 1 and 2

backwash wastewater were similar to those of the treated water. The pH values of the backwash wastewater sampled for Events 3 through 9 (except Event 6) were lower due to pH adjustment of raw water beginning on September 17, 2004. During Event 6, H_2SO_4 was not dosed properly due to the ongoing pH adjustment issues, resulting in the elevated pH condition as discussed in Section 4.4.2.

Backwash wastewater from Tank A generally contained higher concentrations of analytes analyzed than from Tank B since it was in the lead position, except for Events 10 and 11 when the tanks were switched. Turbidity, TSS, and total metal concentrations of the lead tank were higher than those of the lag tank, most likely because the lead tank removed the majority of the particulates from raw water. After media changeouts (i.e., Events 4, 10, and 12), arsenic concentrations in the backwash wastewater were notably less than the previous results, presumably due to the improved quality of the treated water. The arsenic concentrations of the backwash wastewater from the lead tank were sometimes higher than those in the treated water used for backwash, possibly due to desorption of arsenic from the media or blending of the treated water in the distribution system with other untreated sources prior to backwash. The sampling events did not show significant differences for pH or TDS between the two tanks.

Table 4-12. Backwash Water Sampling Results

Sampling Event		Lead Tank	Tank A													Tank B												
			pH	Turbidity	TDS	TSS	Total As	Soluble As	Particulate As	Total Fe	Soluble Fe	Total Mn	Soluble Mn	Total Al	Soluble Al	pH	Turbidity	TDS	TSS	Total As	Soluble As	Particulate As	Total Fe	Soluble Fe	Total Mn	Soluble Mn	Total Al	Soluble Al
No.	Date	A/B	S.U.	NTU	mg/L	mg/L	µg/L	µg/L	µg/L	µg/L	µg/L	µg/L	µg/L	µg/L	µg/L	S.U.	NTU	mg/L	mg/L	µg/L	µg/L	µg/L	µg/L	µg/L	µg/L	µg/L	µg/L	µg/L
1	08/16/04	A	7.6	22	464	NS	NS	36.5	NS	NS	<25	NS	0.2	NS	13.2	7.7	4.2	822	NS	NS	24.5	NS	NS	<25	NS	<0.1	NS	18.2
2	09/13/04	A	7.7	30	206	NS	NS	36.5	NS	NS	<25	NS	0.2	NS	<10	7.7	2.6	248	NS	NS	30.9	NS	NS	<25	NS	0.1	NS	11.1
3	10/12/04[a]	A	7.0	230	224	NS	NS	34.5	NS	NS	<25	NS	0.3	NS	<10	7.2	5.2	216	NS	NS	19.0	NS	NS	<25	NS	<0.1	NS	<10
4	11/22/04[b]	A	7.2	79	252	NS	NS	27.0	NS	NS	<25	NS	1.0	NS	<10	7.1	18	210	NS	NS	0.3	NS	NS	<25	NS	0.2	NS	11.6
5	12/20/04	A	6.9	38	292	NS	NS	25.0	NS	NS	<25	NS	0.3	NS	14.2	6.8	6.6	664	NS	NS	1.5	NS	NS	<25	NS	0.2	NS	14.5
6	01/31/05	A	7.7	41	256	NS	NS	37.0	NS	NS	<25	NS	0.3	NS	<10	7.7	4.5	352	NS	NS	17.1	NS	NS	<25	NS	<0.1	NS	<10
7	03/01/05	A	7.2	56	292	NS	NS	36.3	NS	NS	<25	NS	0.4	NS	<10	7.2	4.9	300	NS	NS	16.2	NS	NS	<25	NS	<0.1	NS	<10
8	03/28/05	A	6.9	65	318	NS	NS	33.4	NS	NS	<25	NS	<0.1	NS	11.1	7.2	7.6	240	NS	NS	21.1	NS	NS	<25	NS	<0.1	NS	32.6
9	04/25/05	A	6.8	290	262	NS	NS	40.5	NS	NS	<25	NS	0.1	NS	15.8	6.9	13	244	NS	NS	26.3	NS	NS	<25	NS	<0.1	NS	<10
10	11/14/05[c]	B	7.8	13	278	20	1.5	1.0	0.5	270	<25	6.8	<0.1	1,328	<10	NA[d]	NA[d]	NA[d]	NA[d]	46.5	19.1	27.4	2,540	<25	37.6	<0.1	860	<10
11	01/04/06	B	7.9	NS	210	2	15.9	15.4	0.5	191	<25	2.0	<0.1	1,018	11.7	7.9	NS	194	18	115	31.7	83.4	9,490	<25	78.4	<0.1	1,438	<10
12	04/05/06[e]	A	7.8	NS	208	<1	36.2	34.5	1.8	569	<25	8.6	<0.1	NS	NS	7.8	NS	198	2	1.3	2.0	<0.1	839	<25	3.1	<0.1	NS	NS
13	05/03/06	A	7.9	NS	200	30	68.8	37.3	31.5	4,356	<25	78.2	<0.1	NS	NS	7.8	NS	204	3	6.9	7.8	<0.1	252	<25	1.2	<0.1	NS	NS
14	06/28/06	A	7.8	NS	200	17	53.7	35.3	18.4	2,996	<25	69.0	0.8	NS	NS	7.7	NS	204	3	16.4	15.6	0.8	164	<25	1.8	0.7	NS	NS

(a) pH adjustment began on 09/17/04.
(b) AAFS50 media of both tanks replaced on 10/25/04.
(c) System operation resumed without pH adjustment on 10/12/05 with Tank B in the lead position after AAFS50 media changeout of both tanks. Note: Tank A backwashes first regardless of lead/lag position.
(d) Insufficient sample for analysis due to loss during transit.
(e) AAFS50 media of both tanks replaced with ARM 200 media on 02/28/06.
NS = not sampled; NA = not available

4.5.3 Distribution System Water Sampling. The results of the 21 distribution system sampling events (including four baseline events) are summarized in Table 4-13. The most noticeable change in the distribution water quality since the system began operation was the decrease in arsenic concentrations. Baseline arsenic concentrations averaged 41.9, 39.2, and 44.5 μg/L for the first draw samples at the DS1, DS2, and DS3 sampling locations, respectively, and 43.0 μg/L for flushed samples at the DS3 sampling location. Arsenic concentrations of the samples collected during the demonstration study averaged 27.3, 27.4, and 8.7 μg/L for first draw samples at DS1, DS2, and DS3, respectively, and 9.2 μg/L for flushed samples at DS3. Arsenic levels were reduced most prominently at DS3, where water quality was more representative of that at the entry point to the distribution system (i.e., treatment system effleunt) due to the location's close proximity to the treatment system. At DS1 and DS2, arsenic concentrations were higher than those in the system effluent, presumably due to the blending of the treated water (supplied by POE Well No. 2) with untreated water from other wells which also contained arsenic.

Lead and copper concentrations ranged from <0.1 to 5.2 μg/L and <0.1 to 435 μg/L, respectively. No samples exceeded the 15-μg/L Pb or 1,300-μg/L Cu action levels. Due to the blending of water from untreated wells at locations DS1 and DS2, it was inconclusive whether these distribution system concentrations had been affected by the arsenic treatment system. However, lead or copper concentrations at DS3 did not appear to be significantly impacted, presumably indicating minimal impacts throughout the distribution system. The DS1 location, which may have had lead joints in the service line, also did not appear to have significant shifts in the lead concentrations.

Similarly, alkalinity and pH values were reduced at DS3 during pH adjustment, but they fluctuated widely at DS1 and DS2. Iron concentrations ranged from <25 to 71 μg/L, except for the first baseline sample at DS3, with concentrations in the majority of the samples at <25 μg/L. The concentrations of manganese in the distribution samples were <7.0 μg/L except for two exceedances at DS1. Aluminum concentrations were <10 μg/L except for four exceedances slightly over 10 μg/L.

4.5.4 Spent Media Sampling. Spent AAFS50 and ARM 200 media samples were collected according to Section 3.3.5 for TCLP and total metals analysis as presented in Tables 4-14 and 4-15, respectively. A complete set of the spent media data including the analytical results of 13 metals is included in Appendix C. Conditions affecting each media run are summarized in Table 4-16.

4.5.4.1 TCLP. The TCLP results indicated that both media types were non-hazardous and could be disposed of in a standard solid waste landfill. Only barium was detected at 1.43 to 1.63 mg/L for AAFS50 and at 7.4 to 7.6 mg/L for ARM 200 (Table 4-14).

4.5.4.2 Arsenic. The spent media results indicated that the media removed arsenic as water passed through the lead and then lag tanks (i.e., from Tank A to Tank B during Media Runs 1, 2, and 4 and from Tank B to Tank A during Media Run 3), as evident by the decreasing arsenic concentrations shown in Table 4-15. The average actual arsenic loadings on the spent media (Table 4-15) as well as theoretical values based on the arsenic breakthrough curves (Figures 4-10a-d) are presented in Table 4-17. The theoretical adsorptive capacities were calculated in terms of mg As/g dry of media by dividing the arsenic mass represented by the area between the influent and lead curves and lead and lag curves by the amount of dry media in each tank. AAFS50 and ARM 200 dry media masses were calculated based on moisture contents of 17.4 and 8% (Table 4-3), respectively, to be analogous with the spent media results.

The theoretical and actual arsenic loading on the media coincided with the media run lengths. Since Media Run 1 operated well beyond 10-μg/L arsenic breakthrough from the lag tank, employed inconsistent operating scenarios (e.g., pH adjustment), and achieved poor recoveries of 61 and 57% when

Table 4-13. Distribution System Sampling Results

Sampling Event		DS1									DS2[a]									DS3[b]																
		Non-LCR Residence									Non-LCR Residence									Non-Residence																
		1st Draw									1st Draw									1st Draw									Flushed[c]							
		Stagnation Time	pH	Alkalinity[d]	As	Fe	Mn	Al	Pb	Cu	Stagnation Time	pH	Alkalinity[d]	As	Fe	Mn	Al	Pb	Cu	Stagnation Time	pH	Alkalinity[d]	As	Fe	Mn	Al	Pb	Cu	pH	Alkalinity[d]	As	Fe	Mn	Al	Pb	Cu
No.	Date	hr	S.U.	mg/L	µg/L	µg/L	µg/L	µg/L	µg/L	µg/L	hr	S.U.	mg/L	µg/L	µg/L	µg/L	µg/L	µg/L	µg/L	hr	S.U.	mg/L	µg/L	µg/L	µg/L	µg/L	µg/L	µg/L	S.U.	mg/L	µg/L	µg/L	µg/L	µg/L	µg/L	µg/L
BL1	02/10/04	8.5	7.7	157	43.2	71.0	1.5	<10	0.3	176	8.3	8.2	144	43.7	53.3	0.5	<10	0.4	216	16.0	7.7	153	46.9	845	6.6	<10	5.2	26.9	NS	NS	NS	NS	NS	NS	NS	NS
BL2	02/24/04	6.8	7.3	160	48.7	<25	0.2	<10	0.1	121	7.9	7.4	143	45.0	<25	0.4	<10	0.2	231	15.8	7.6	160	51.8	<25	1.8	<10	0.5	3.5	7.6	152	50.6	<25	1.6	<10	0.1	0.7
BL3	03/16/04	12.5	7.6	150	41.5	<25	<0.1	<10	0.1	140	12.5	7.6	141	38.9	<25	0.4	<10	0.2	278	15.0	7.6	158	44.4	<25	1.4	<10	2.1	23.0	7.5	158	43.8	<25	1.2	<10	0.2	1.5
BL4	03/30/04	8.5	7.2	141	34.2	<25	0.5	<10	<0.1	109	99.5	7.6	141	29.1	<25	0.6	<10	0.1	251	14.9	7.6	155	34.9	<25	1.2	<10	0.5	3.0	7.6	157	34.6	<25	1.2	<10	0.1	1.0
1	07/28/04	9.4	7.8	139	29.5	<25	<0.1	<10	<0.1	53.6	8.5	7.7	139	32.6	<25	<0.1	<10	0.2	186	16.1	7.7	151	5.5	<25	<0.1	<10	0.7	8.6	7.7	159	5.4	<25	<0.1	<10	0.2	1.8
2	08/25/04	8.5	7.7	146	39.2	<25	0.1	<10	0.2	39.7	8.0	7.7	144	34.5	<25	0.1	<10	0.4	209	19.0	7.7	160	23.9	<25	0.1	<10	1.4	17.4	7.7	148	24.0	<25	0.1	<10	0.2	1.0
3	09/22/04[e]	8.7	6.8	134	27.5	30.3	3.2	10.5	0.4	147	8.3	7.3	134	28.7	<25	0.6	<10	0.4	163	17.7	7.1	126	13.7	<25	1.0	10.2	0.8	4.5	7.0	126	16.2	<25	<0.1	<10	0.3	3.0
4	10/20/04	8.5	7.3	144	30.1	<25	0.2	18.7	0.5	141	9.0	7.4	144	31.0	<25	0.6	<10	0.8	207	24.0	7.2	123	19.5	<25	0.3	14.8	0.8	24.6	7.1	131	18.5	65.3	0.6	<10	<0.1	1.0
5	11/17/04[f]	8.7	7.4	152	19.5	<25	0.3	<10	0.4	285	Homeowner not available									22.8	7.1	131	0.3	<25	1.9	<10	1.6	11.3	7.0	127	0.2	<25	0.3	<10	0.9	5.5
6	12/15/04	9.5	7.4	138	18.2	<25	0.3	<10	0.8	298	8.0	7.4	134	17.5	<25	0.3	<10	1.0	435	13.1	7.1	110	0.3	40.6	0.5	<10	2.5	10.5	7.3	110	0.2	<25	0.4	<10	0.8	4.3
7	01/12/05	8.9	7.4	140	18.5	<25	<0.1	<10	0.6	227	8.3	7.6	144	15.0	<25	1.3	<10	0.9	108	15.7	6.9	108	0.2	<25	0.3	<10	0.7	4.1	7.0	112	0.1	<25	0.3	<10	0.4	2.2
8	02/09/05	8.9	7.2	156	23.0	<25	1.0	<10	0.5	157	8.3	7.7	147	23.6	<25	<0.1	<10	0.3	220	18.7	7.2	143	5.0	<25	0.4	<10	0.9	7.0	7.4	134	5.0	<25	0.4	<10	0.5	2.5
9	03/09/05	8.8	8.1	156	19.7	<25	0.9	<10	0.4	216	8.3	8.0	156	24.3	<25	0.2	<10	0.3	255	18.8	7.8	143	7.7	<25	0.3	<10	0.6	3.9	7.6	143	7.8	<25	0.3	<10	0.4	2.9
10	04/06/05	8.5	7.7	156	18.4	<25	0.8	<10	0.3	95.4	8.5	7.8	156	23.2	<25	0.2	<10	0.4	403	17.3	7.5	134	12.0	<25	0.3	<10	0.9	7.3	7.4	138	12.2	<25	0.3	<10	0.5	4.6
11	05/04/05[g]	8.8	7.7	178	29.8	<25	0.9	<10	0.4	159	Homeowner not available									17.7	7.6	147	26.6	<25	1.0	<10	0.6	5.9	7.5	142	26.9	<25	0.9	<10	0.3	3.1
12	06/08/05	8.7	7.5	132	36.0	<25	0.6	<10	0.4	138	Homeowner not available									19.5	7.2	132	11.9	<25	0.4	<10	1.6	14.5	7.0	132	17.8	<25	1.3	<10	3.2	0.9
13	07/06/05	8.5	7.4	154	29.3	<25	0.2	<10	0.3	90.8	Homeowner not available									19.5	7.0	132	9.3	<25	0.3	<10	0.4	4.5	7.0	132	9.8	<25	0.2	<10	0.5	5.1
14	10/19/05[h]	11.7	7.8	176	37.9	<25	6.7	<10	0.3	26.0	8.5	7.8	176	42.0	<25	<0.1	<10	0.2	38.9	11.6	8.0	180	0.6	<25	0.1	<10	0.2	0.9	7.9	180	0.5	<25	0.1	<10	0.1	0.6
15	11/16/05	15.5	7.9	141	30.2	<25	63.9	<10	0.4	122	9.5	7.9	167	34.3	<25	<0.1	<10	<0.1	90.3	15.4	7.8	176	<0.1	<25	<0.1	<10	<0.1	0.5	7.8	176	<0.1	<25	<0.1	<10	<0.1	<0.1
16	12/14/05	15.5	7.9	154	30.4	<25	19.9	<10	0.5	61.9	15.9	8.0	158	20.2	<25	0.5	<10	0.3	117	15.5	7.9	176	1.6	<25	<0.1	<10	<0.1	1.1	7.8	176	1.6	<25	<0.1	<10	<0.1	<0.1
17	01/18/06	12.3	7.9	158	27.3	<25	3.8	<10	0.4	147	8.7	7.9	158	29.8	<25	0.1	<10	0.3	176	9.5	7.8	176	9.6	<25	<0.1	<10	0.3	3.5	7.8	180	9.5	<25	0.1	<10	0.2	1.7

(a) Samples collected from a neighboring home on 02/10/04. (b) Location closest to treatment system with minimal effects from other wells. (c) Stagnation times not available for flushed location. (d) as $CaCO_3$. (e) pH adjustment began on 09/17/04. (f) AAFS50 media of both tanks replaced on 10/25/04. (g) AAFS50 media of Tank A replaced on 04/29/05. (h) AAFS50 media of both tanks replaced prior to system startup on 10/12/05; pH adjustment discontinued.
Lead action level = 15 µg/L; copper action level = 1,300 µg/L
BL = baseline sampling; NA = data not available

Table 4-14. TCLP Results of Spent Media

Parameter	AAFS50		ARM 200	
	Tank A	Tank B	Tank A	Tank B
As (mg/L)	<0.05	<0.05	<0.10	<0.10
Ba (mg/L)	1.43-1.52	1.63	7.6	7.4
Cd (mg/L)	<0.05	<0.05	<0.01	<0.01
Cr (mg/L)	<0.05	<0.05	<0.01	<0.01
Pb (mg/L)	<0.1	<0.1	<0.05	<0.05
Hg (mg/L)	<0.003	<0.003	<0.002	<0.002
Se (mg/L)	<0.3	<0.3	<0.10	<0.10
Ag (mg/L)	<0.05	<0.05	<0.01	<0.01

Table 4-15. Metals' Analysis of Spent Media

Sample Description	Analyte Concentration (mg/g)			
	Al	Fe	Mn	As
AAFS50 Media Run 1				
Tank A-Top	111	16.0	0.10	0.64
Tank A-Middle	86.4	14.9	0.09	0.53
Tank A-Bottom	101	15.1	0.08	0.53
Tank B-Top	90.5	14.3	0.12	0.41
Tank B-Middle	110	15.4	0.12	0.40
Tank B-Bottom	124	17.5	0.12	0.35
AAFS50 Media Run 2				
Tank A-Top	441	17.8	0.16	1.62
Tank A-Middle	447	17.1	0.15	1.58
Tank A-Bottom	442	16.4	0.12	1.27
AAFS50 Media Run 3				
Tank A-Top	323	15.5	0.17	0.57
Tank A-Middle	314	15.3	0.17	0.46
Tank A-Bottom	345	16.4	0.14	0.26
Tank B-Top	323	15.6	0.19	0.90
Tank B-Middle	323	14.1	0.17	0.83
Tank B-Bottom	340	15.6	0.16	0.62
ARM 200 Media Run 4				
Tank A-Top	0.52	611	2.18	2.18
Tank A-Middle	0.45	588	2.26	2.27
Tank A-Bottom	0.43	594	2.35	1.82
Tank B-Top	0.35	594	2.50	1.67
Tank B-Middle	0.35	592	2.68	1.44
Tank B-Bottom	0.30	596	2.64	0.79

Note: Average compositions calculated from triplicate analyses.

comparing the actual and theoretical arsenic loading, those results are not as meaningful to this discussion. The theoretical adsorptive capacity of the lead tank to 10-µg/L arsenic breakthrough was 0.3 mg/g during Media Run 3, which matched that obtained from an RSSCT conducted on-site (Westerhoff et al., 2006). The arsenic capacity of the AAFS50 media increased almost two-fold using acid addition from

0.78 to 1.49 mg/g in the lead tank, respectively (Table 4-17). These values corresponded to theoretical values of 0.69 and 1.40 mg/g with recoveries of 113 and 106%, respectively (Table 4-17). The ARM 200 media had a larger arsenic adsorptive capacity of 2.09 and 1.30 mg/g for the lead and lag tanks compared the AAFS50 media run capacities (Table 4-17). Favorable recoveries of 102 and 118% also were seen for these data with theoretical values of 2.04 and 1.10 mg/g, respectively (Table 4-17).

Table 4-16. Media Run Conditions Affecting Arsenic Loading

Media Run	Position		Media Type		pH Adjustment		Chlorination		Run Time	
	Lead Tank A	Lead Tank B	AAFS50	ARM 200	During Media Evaluation	After Media Evaluation	Before System	After System	24 hr/day	16 hr/day
1	√		√			√	√	√	√	
2	√		√		√	√	√		√	
3		√	√			√	√			√
4	√			√			√		√	

Table 4-17. Summary of Arsenic Removal Capacity of Media

Media Run[(a)]	Tank	Analytical Source: Breakthrough Curves[(b)] (Figures 4-10a-d)	Analytical Source: Spent Media[(c)] (Table 4-15)	Recovery
		mg As/g dry media		%
1	A	0.93	0.57	61
	B	0.69	0.39	57
2	A	1.40	1.49	106
	B	0.83	NA	NA
3	A	0.45	0.43	96
	B	0.69	0.78	113
4	A	2.04	2.09	102
	B	1.10	1.30	118

(a) See Table 4-16 for summary of media run conditions affecting performance.
(b) Calculations account for 17.4 and 8% moisture content of AAFS50 and ARM 200, respectively.
(c) Average of top, middle, and bottom data in each tank.

4.5.4.3 Other Metals. The AAFS50 media also adsorbed Mg, P, and Zn as water passed through the tanks (Appendix C). Consistent AAFS50 iron concentrations in Table 4-15 indicated that the coating of the media was minimal at 1.4 to 1.8% since source water contained non-detect iron levels (Section 4.5.1.2). For unknown reasons, possibly incomplete sample digestion using nitric acid (HNO_3) prior to ICP-MS analysis, Al, Ca, Mg, P, and Si concentrations varied significantly across the three media runs while Cd, Cu, Mn, Ni, Pb, and Zn concentrations were steadier (Appendix C). Investigation into the purity of the NaOCl and H_2SO_4 confirmed that both solutions were certified against traceable standards. According to the media specifications, AAFS50 media is 83% Al_2O_3 (including additive) (Table 4-3). Based on this composition, the results from Media Run 2 indicating 41 to 47% Al (or 83 to 84% Al_2O_3) may be most representative. According to the spent media results, acid addition did not appear to have a clear pattern of impact on the adsorption or desorption of the various analytes other than arsenic.

The ARM 200 media also adsorbed Al, Ca, Mg, P, and Zn and desorbed Mn and Ni as water passed through the tanks (Appendix C). Concentrations of Al and Fe were expectedly lower and higher than those of the AAFS50 media, respectively, due to the media type. Although chemical composition specifications of the ARM 200 media were not available, the ICP-MS analyst confirmed that the spent media samples were nearly completely digested using HNO_3 prior to analysis. This observation supports the representativeness of the results and confirms that the media was 59 to 61% Fe and also contained significantly more Ca, Cu, Mn, Ni, and Zn compared to the AAFS50 media. Concentrations of Mg, Pb, and Si were comparable to those of the AAFS50 media.

4.6 System Cost

The cost of the system was evaluated based on the capital cost per gpm (or gpd) of design capacity and the O&M cost per 1,000 gal of water treated. This task required tracking capital cost for the equipment, site engineering, and installation and the O&M cost for media replacement and disposal, chemical supply, electricity consumption, and labor. The shed construction cost was not included in the capital cost because it was outside of the scope of this demonstration project and was funded separately by AWC.

4.6.1 Capital Cost. The capital investment for the equipment, site engineering, and installation was $228,309 (Table 4-18). The equipment cost was $122,544 (or 54% of the total capital investment), which included the cost for two skid-mounted pressure tanks, 44 ft^3 (33.4 ft^3 actually delivered [Section 4.2]) of AAFS50 media, instrumentation and controls, a backwash recycle system, a chemical injection system, labor (for operator training, technical support, and system shakedown), warranty, and miscellaneous materials and supplies. The AAFS50 media price was quoted at $85.50/$ft^3$ (or $1.30/lb) at the beginning of the study, but increased to $98.86/$ft^3$ (or $1.50/lb) for subsequent changeouts.

The engineering cost included preparation of the system layout and footprint, site drawings and piping plans, and equipment cut sheets for the permit application (Section 4.3.1). The engineering cost was $50,659, which was 22% of the total capital investment.

The installation cost included labor and materials to unload and install the treatment system, perform the piping tie-ins and electrical work, and load and backwash the media (Section 4.3.2). The installation was performed by Kinetico and its subcontractor, Fann Environmental. The installation cost was $55,106, or 24% of the total capital investment.

The capital cost of $228,309 was normalized to $6,171/gpm ($4.29/gpd) of design capacity using the system's rated capacity of 37 gpm (or 53,280 gpd). The capital cost also was converted to an annualized cost of $21,551/yr using a capital recovery factor (CRF) of 0.09439 based on a 7% interest rate and a 20-yr return period. Assuming that the system operated 24 hr/day, 7 day/wk at the design flowrate of 37 gpm to produce 19,450,000 gal/yr, the unit capital cost would be $1.11/1,000 gal. During the first year, the system produced 18,750,000 gal of water, so the unit capital cost increased slightly to $1.15/1,000 gal.

AWC installed a sun shed with a galvanized steel frame, which was later enhanced to completely enclose the treatment system (Section 4.3.3). The 12 ft × 25 ft structure had a height of 11.5 ft and was mounted on a 12 ft × 25 ft concrete pad. The structure was pre-engineered to sustain a 90-mph wind load and a 30-lb/ft^2 snow load. The total cost for the structure was $22,078 which included $4,500 for materials and labor for assembly.

4.6.2 O&M Cost. The O&M cost included media replacement and disposal, chemical supply, electricity consumption, and labor. Because the system was under warranty, no additional cost was incurred for repairs. The O&M cost is summarized in Table 4-19. Due to the short durations of Media Runs 1 and 3 using AAFS50 without pH adjustment, it would be most cost-effective to replace the media

Table 4-18. Capital Investment for Kinetico's Treatment System

Description	Cost	% of Capital Investment Cost
Equipment		
Media Skid and Tanks	$30,134	–
Air Compressor	$2,602	–
Instrumentation and Controls	$13,211	–
Backwash Recycle System	$13,486	–
Media Eductor Kit	$943	–
Chemical Injection	$11,197	–
Labor	$39,736	–
Warranty	$10,610	–
Change Order for Flow Totalizer	$625	–
Equipment Total	**$122,544**	**54%**
Engineering		
Labor	$40,021	–
Subcontractor	$10,638	–
Engineering Total	**$50,659**	**22%**
Installation		
Labor	$15,213	–
Travel	$10,319	–
Subcontractor	$29,574	–
Installation Total	**$55,106**	**24%**
Total Capital Investment	**$228,309**	**100%**

in both tanks when the lag tank effluent reaches 10 μg/L of arsenic. This scenario, also known as batch mode, could save labor, travel, and administrative cost, which would most likely not be offset by any increased media capacity. Because Media Run 2 using AAFS50 with pH adjustment and Media Run 4 using ARM 200 without pH adjustment were able to last significantly longer, it would be sensible to replace the media of only the lead tank when the lag effluent reaches 10 μg/L of arsenic. This scenario, also known as lead/lag mode (Section 4.2), is the optimal operating scenario for systems with tanks in series by facilitating better use of the media capacity.

The media replacement cost of both tanks for Media Runs 1 and 3 was based on a vendor quote of $8,725, which included $4,350 for 44 ft^3 of AAFS50 media (or $98.86/$ft^3$) and $4,375 for labor, travel, and spent media sampling, testing, and disposal. Using this quote and assuming that the cost for labor, travel, and spent media disposal was proportional to the media quantity, the AAFS50 media replacement cost for one tank was estimated to be $4,363. Based on the actual startup cost of $27,220 for Media Run 4, the media replacement cost of one tank was estimated to be $13,610, including $11,000 for 22 ft^3 of ARM 200 media (or $500/$ft^3$), and $2,610 for labor, travel, and spent media sampling, testing, and disposal.

By averaging each media replacement cost over the life of the media, the cost per 1,000 gal of water treated was calculated as presented in Table 4-19. For lead/lag mode, note that after the partially exhausted lag tank is switched to the lead position with the newly rebedded tank in the lag position, the run length for the subsequent run will be shorter than the initial run, thus resulting in an increased replacement frequency and cost than shown in Table 4-19.

Chemical cost was incurred for H_2SO_4 only, since the FA-236-AS system did not change the dosage of the NaOCl used for disinfection, compared to prior operation without arsenic removal treatment. The

Table 4-19. Summary of O&M Cost

Category	AAFS50 without pH Adjustment (Batch Replacement)	AAFS50 with pH Adjustment (Lead/Lag Replacement)	ARM 200 without pH Adjustment (Lead/Lag Replacement)	Remarks
Water treated (1,000 gal)	3,411	7,580	8,464	To 10-µg/L As breakthrough from lag tank
Media Replacement and Disposal				
Media volume (ft^3)	44	22	22	
Media cost ($)	$4,350	$2,175	$11,000	Vendor quote
Labor cost ($)	$4,375	$2,188	$2,610	Includes travel, sampling, and disposal
Subtotal ($)	$8,725	$4,363	$13,610	
Media replacement cost ($/1,000 gal)	$2.56	$0.58	$1.61	
Chemical Usage				
Acid cost ($/gal)	-	$10.16	-	50% H_2SO_4 including shipping
Acid dosage (gal/1,000 gal)	-	0.05	-	50% H_2SO_4
Drum disposal ($)	-	$480	-	Quote of $60/drum
Chemical cost ($/1,000 gal)	-	$0.61	-	
Electricity				
Electric utility charge ($/kWh)	$0.12			Rate provided by AWC
Electricity cost ($/month)	$244			
Electricity cost ($/1,000 gal)	$0.16			
Labor				
Labor (hr/week)	0.4	2.4	0.4	
Labor cost ($/1,000 gal)	$0.03	$0.14	$0.03	Labor rate = $21/hr
Total O&M cost ($/1,000 gal)	$2.74	$1.49	$1.79	To 10-µg/L As breakthrough from lag tank

system consumed approximately 3.4 gpd of 37% H_2SO_4 from September 17 to October 1, 2004, and then approximately 2.8 gpd (or 0.05 gal/1,000 gal) of 50% H_2SO_4 afterwards. The pH adjustment cost was $0.61/1,000 gal of water treated, which was significantly higher than the vendor-estimated $0.10/1,000 gal of water treated due to a higher unit price of the acid and the additional cost incurred for drum neutralization and disposal. Acid addition increased the media run length of AAFS50 to 10-µg/L arsenic breakthrough by over twice as much compared to the unaltered pH condition.

Electricity consumption was calculated based on the difference between the average monthly cost from electric bills before and after the system startup. The difference in cost was approximately $244/month or $0.16/1,000 gal of water treated.

Initially, the routine, non-demonstration related labor activities consumed 20 to 30 min/day (Section 4.4.7.3) as the operator was becoming familiar with the treatment system and during periods of acid addition due to added O&M issues and complexities (Section 4.4.2). Afterwards, the labor decreased to about 5 to 10 min/day during Media Runs 3 and 4. Based on these time commitments and a labor rate of

$21/hr, the labor costs were approximately $0.14/1,000 gal of water treated with acid addition and $0.03/1,000 gal of water treated without acid addition.

By averaging the total O&M cost over the life of the media, the cost per 1,000 gal of water treated was plotted as a function of the media run length as shown in Figure 4-15. Note that the bed volumes were calculated based on the quantity of media in both tanks (i.e., 44 ft^3 or 330 gal).

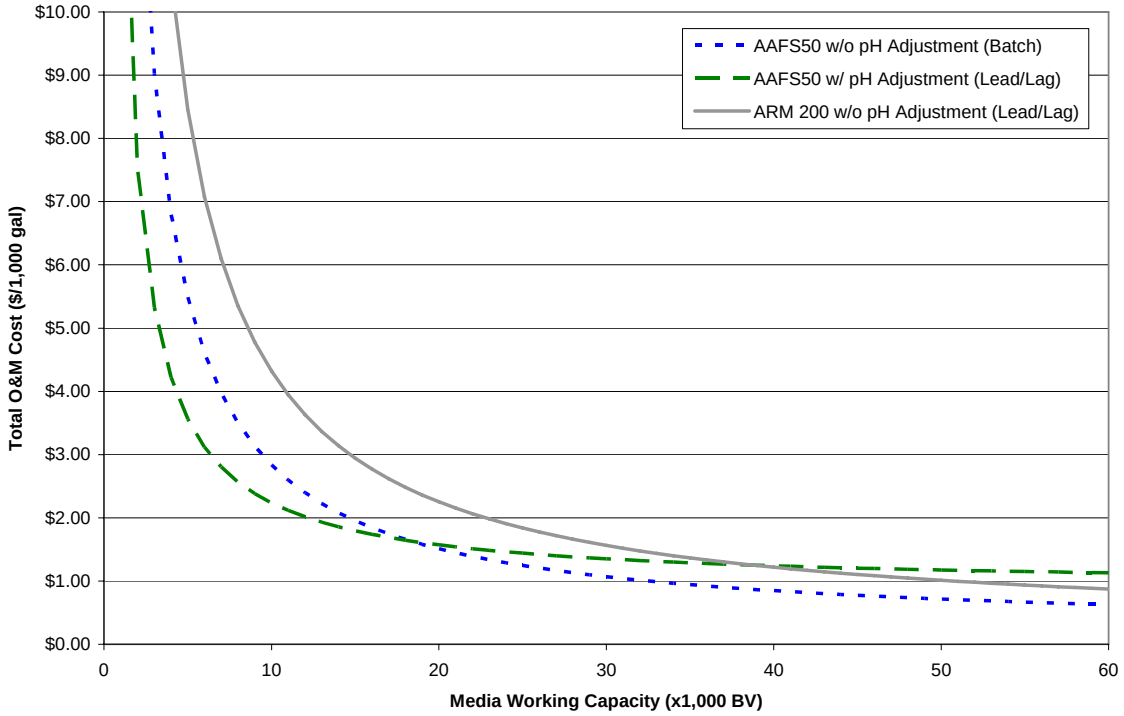

Note: 1 BV = 44 ft^3 = 330 gal

Figure 4-15. Total O&M Cost Including Media Replacement

Section 5.0 REFERENCES

ADEQ. 2005. *Safe Drinking Water: Operator Certification*. Website: http://www.azdeq.gov/environ/water/dw/opcert.html.

AWC. 2004. *2003 Annual Water Quality Report for Valley Vista, Arizona PWSID# 13-114*.

AWC. 2005. *2004 Annual Water Quality Report for Valley Vista, Arizona PWSID# 13-114*.

AWC. 2006. *2005 Annual Water Quality Report for Valley Vista, Arizona PWSID# 13-114*.

Aragon, A., B. Thomson, and J. Chwirka. 2002. *Rapid Small Scale Column Testing for Arsenic Adsorption Media*. 9th Annual International Petroleum Environmental Conference, Albuquerque, NM.

Badruzzaman, M., P. Westerhoff, and D.R.U. Knappe. 2004. "Intraparticle Diffusion and Adsorption of Arsenate onto Granular Ferric Hydroxide (GFH)." *Water Research*, 38(18), 4002-4012.

Battelle. 2003. *Revised Quality Assurance Project Plan for Evaluation of Arsenic Removal Technology*. Prepared under Contract No. 68-C-00-185, Task Order No. 0019, for U.S. Environmental Protection Agency, National Risk Management Research Laboratory, Cincinnati, OH.

Battelle. 2004. *Final System Performance Evaluation Study Plan: U.S. EPA Demonstration of Arsenic Removal Technology at Valley Vista, Arizona*. Prepared under Contract No. 68-C-00-185, Task Order No. 0019, for U.S. Environmental Protection Agency, National Risk Management Research Laboratory, Cincinnati, OH.

Chen, A.S.C., L. Wang, J.L. Oxenham, and W.E. Condit. 2004. *Capital Costs of Arsenic Removal Technologies: U.S. EPA Arsenic Removal Technology Demonstration Program Round 1*. EPA/600/R-04/201. U.S. Environmental Protection Agency, National Risk Management Research Laboratory, Cincinnati, OH.

Clifford, D. 1999. "Ion Exchange and Inorganic Adsorption." In: F. Pontius, ed., *Water Quality and Treatment: A Handbook of Community Water Supplies*. American Water Works Association. New York: McGraw Hill.

Edwards, M., S. Patel, L. McNeill, H. Chen, M. Frey, A.D. Eaton, R.C. Antweiler, and H.E. Taylor. 1998. "Considerations in As Analysis and Speciation." *J. AWWA, 90(3)*: 103-11.

EPA. 2003. Minor Clarification of the National Primary Drinking Water Regulation for Arsenic. *Federal Register*, 40 CFR Part 141.

EPA. 2002. *Lead and Copper Monitoring and Reporting Guidance for Public Water Systems*. EPA/816/R-02/009. U.S. Environmental Protection Agency, Office of Water, Washington, D.C.

EPA. 2001. National Primary Drinking Water Regulations: Arsenic and Clarifications to Compliance and New Source Contaminants Monitoring. *Federal Register*, 40 CFR Parts 9, 141, and 142.

Kinetico. 2004. *The City of Valley Vista, AZ: Installation Manual; Suppliers Literature; and Operation and Maintenance Manual, FA-236-AS Adsorptive Arsenic Removal System*. Newbury, OH.

Lin, T.F. and J.K. Wu. 2001. "Adsorption of arsenite and arsenate within activated alumina grains: Equilibrium and kinetics." *Water Research*, 35(8), 2049-2057.

Rubel, Jr., F. 2003. *Design Manual: Removal of Arsenic from Drinking Water by Adsorptive Media.* EPA/600/R-03/019. U.S. Environmental Protection Agency, National Risk Management Research Laboratory, Cincinnati, OH.

Stumm, W. and J.J. Morgan. 1981. *Aquatic Chemistry*, 2nd ed. New York: John Wiley & Sons.

Valigore, J.M., A.S.C. Chen, W.E. Condit, L. Cumming, G.M. Lewis, J.P. Lipps, S.E. McCall, H.T. Shiao, N. Tong, L. Wang, and S. Williams. 2006. "Results and Lessons Learned for Adsorptive Media Systems." Presented at *Arsenic Removal Demonstration Program Workshop*. August 23, 2006, Cincinnati, OH.

Wang, L., W.E. Condit, and A.S.C. Chen. 2004. *Technology Selection and System Design: U.S. EPA Arsenic Removal Technology Demonstration Program Round 1*. EPA/600/R-05/001. U.S. Environmental Protection Agency, National Risk Management Research Laboratory, Cincinnati, OH.

Westerhoff, P., T. Benn, A.S.C. Chen, L. Wang, and L. Cumming. 2006. *Assessing Arsenic Removal by Metal (Hydr)Oxide Adsorbents Using Rapid Small Scale Column Tests*. Draft Report Prepared under Contract No. 68-C-00-185, Task Order 0025 for U.S. Environmental Protection Agency, National Risk Management Research Laboratory, Cincinnati, OH.

APPENDIX A

OPERATIONAL DATA

Table A-1. US EPA Arsenic Demonstration Project at Valley Vista, AZ – Daily System Operation Log Sheet

Week No.	Date & Time	Run Time	Tank Position		Treatment System							Pressure			ΔP		In-line pH	Backwash Water Recycle			Acid Tank Level
			Lead	Lag	Flow rate	Totalizer	Cum Throughput TA	Bed Volume TA	Cum Throughput TB	Bed Volume TB	Avg Flowrate	Inlet	Between Tanks	Outlet	Inlet - Between	Between - Outlet		Bag Filter Inlet Pressure	Bag Filter Outlet Pressure	Recycle Flow	
		hr	A/B	A/B	gpm	gal	gal		gal		gpm	psig	psig	psig	psi	psi	S.U.	psig	psig	gpm	gal
1	06/24/04 15:05	NA	A	B	35	24472	NA	NA	NA	NA	NA	73	70	68	3	2	7.9	77	77	NA	NA
	06/25/04 12:00	16.0	A	B	36	69934	45462	364	45462	182	36.2	74	70	68	4	2	7.9	78	78	NA	NA
2	06/28/04 10:30	50.3	A	B	36	221594	197122	1578	197122	789	35.9	74	70	68	4	2	7.9	78	78	NA	NA
	06/29/04 12:05	17.1	A	B	36	276814	252342	2020	252342	1010	36.0	74	70	68	4	2	7.9	78	78	NA	NA
	06/30/04 13:05	16.2	A	B	35	330598	306126	2451	306126	1225	35.9	74	70	68	4	2	7.9	78	78	NA	NA
	07/01/04 12:20	15.8	A	B	36	380830	356358	2853	356358	1426	36.0	74	70	68	4	2	7.9	78	77	NA	NA
	07/02/04 13:55	18.4	A	B	36	436016	411544	3295	411544	1647	36.0	74	70	68	4	2	7.9	77	77	NA	NA
3	07/06/04 14:30	65.7	A	B	39	644385	619913	4963	619913	2481	36.5	76	72	70	4	2	7.9	99	100	2	NA
	07/07/04 12:55	14.7	A	B	35	689640	665168	5325	665168	2662	33.6	74	70	68	4	2	7.9	78	78	NA	NA
	07/08/04 13:40	15.8	A	B	36	742924	718452	5751	718452	2876	35.9	74	70	68	4	2	7.9	78	78	NA	NA
	07/09/04 12:00	13.9	A	B	35	791020	766548	6137	766548	3068	35.9	74	70	68	4	2	7.9	78	78	NA	NA
4	07/12/04 10:15	45.6	A	B	36	942199	917727	7347	917727	3673	35.9	74	70	68	4	2	7.9	77	77	NA	NA
	07/13/04 11:35	16.3	A	B	36	996735	972263	7783	972263	3892	35.9	74	70	68	4	2	7.9	78	78	NA	NA
	07/14/04 10:40	14.9	A	B	36	46440	1021968	8181	1021968	4091	35.9	74	70	69	4	1	7.9	79	79	NA	NA
	07/15/04 13:40	17.2	A	B	36	104290	1079818	8644	1079818	4322	35.7	74	70	69	4	1	7.9	78	78	NA	NA
	07/16/04 11:40	14.0	A	B	36	151771	1127299	9024	1127299	4512	36.0	74	70	69	4	1	7.9	78	78	NA	NA
5	07/19/04 11:15	44.8	A	B	36	306110	1281638	10260	1281638	5130	35.9	74	70	69	4	1	7.9	79	79	NA	NA
	07/20/04 12:55	16.0	A	B	38	360500	1336028	10695	1336028	5348	35.3	76	72	71	4	1	7.9	106	106	3	NA
	07/21/04 09:45	13.1	A	B	36	405873	1381401	11059	1381401	5529	36.3	74	70	69	4	1	7.9	79	79	NA	NA
	07/22/04 14:20	18.2	A	B	35	467800	1443328	11554	1443328	5777	36.1	74	70	69	4	1	7.9	79	79	NA	NA
	07/23/04 14:00	14.9	A	B	35	518736	1494264	11962	1494264	5981	35.9	74	70	69	4	1	7.9	78	78	NA	NA
6	07/26/04 11:30	43.7	A	B	36	669000	1644528	13165	1644528	6583	36.0	74	70	69	4	1	7.9	78	78	NA	NA
	07/27/04 11:00	14.8	A	B	36	719830	1695358	13572	1695358	6786	36.0	74	70	69	4	1	7.9	78	78	NA	NA
	07/28/04 09:30	14.3	A	B	36	768642	1744170	13963	1744170	6981	36.2	74	71	70	3	1	8.0	79	79	NA	NA
	07/29/04 13:30	17.7	A	B	36	828940	1804468	14445	1804468	7223	35.9	74	70	69	4	1	8.0	78	78	NA	NA
	07/30/04 12:30	14.6	A	B	36	878699	1854227	14844	1854227	7422	36.1	74	70	69	4	1	8.0	79	79	NA	NA
7	08/02/04 11:00	44.2	A	B	36	30800	2006328	16061	2006328	8031	36.0	74	71	69	3	2	8.0	78	78	NA	NA
	08/03/04 10:40	14.9	A	B	36	81830	2057358	16470	2057358	8235	35.9	74	71	69	3	2	8.0	78	78	NA	NA
	08/04/04 09:20	14.1	A	B	36	130350	2105878	16858	2105878	8429	35.7	74	71	69	3	2	8.0	78	77	NA	NA
	08/05/04 13:30	17.6	A	B	36	191400	2166928	17347	2166928	8674	36.1	74	72	70	2	2	8.0	79	78	NA	NA
	08/06/04 15:05	16.0	A	B	36	246755	2222283	17790	2222283	8895	36.1	76	72	71	4	1	8.0	79	78	NA	NA
8	08/09/04 13:25	44.6	A	B	35	398500	2374028	19005	2374028	9502	36.0	75	71	70	4	1	8.0	79	78	NA	NA
	08/10/04 16:55	17.7	A	B	36	457690	2433218	19479	2433218	9739	35.9	75	71	70	4	1	8.0	79	78	NA	NA
	08/11/04 11:32	11.8	A	B	36	497895	2473423	19801	2473423	9900	36.0	75	71	70	4	1	8.0	79	78	NA	NA
	08/12/04 13:40	16.9	A	B	36	554220	2529748	20252	2529748	10126	35.9	75	71	70	4	1	8.0	79	78	NA	NA
	08/13/04 13:50	15.4	A	B	36	606420	2581948	20669	2581948	10335	36.0	75	71	70	4	1	8.0	79	78	NA	NA
9	08/16/04 12:15	44.6	A	B	36	756500	2732028	21871	2732028	10935	35.5	74	71	70	3	1	7.9	79	78	NA	NA
	08/17/04 14:07	17.4	A	B	37	812550	2788078	22320	2788078	11160	36.1	76	72	71	4	1	8.0	109	109	2	NA
	08/18/04 09:45	12.8	A	B	36	855100	2830628	22660	2830628	11330	36.1	74	71	70	3	1	8.0	79	78	NA	NA
	08/19/04 11:40	16.8	A	B	36	911150	2886678	23109	2886678	11554	36.0	76	72	71	4	1	8.0	79	79	NA	NA
	08/20/04 12:00	16.1	A	B	36	964100	2939628	23533	2939628	11766	36.3	74	71	70	3	1	8.0	79	78	NA	NA
10	08/23/04 11:38	47.4	A	B	36	119280	3094808	24775	3094808	12388	36.1	74	71	70	3	1	8.0	79	78	NA	NA
	08/24/04 11:55	15.6	A	B	36	171800	3147328	25196	3147328	12598	36.0	75	72	71	3	1	8.0	80	79	NA	NA
	08/25/04 09:30	13.7	A	B	36	218540	3194068	25570	3194068	12785	36.1	74	71	70	3	1	8.0	79	78	NA	NA
	08/26/04 11:40	16.6	A	B	36	275060	3250588	26022	3250588	13011	36.0	74	71	70	3	1	8.0	79	78	NA	NA
	08/27/04 14:10	17.3	A	B	36	332625	3308153	26483	3308153	13242	36.2	75	71	70	4	1	8.1	79	79	NA	NA
11	08/30/04 14:15	47.6	A	B	35	488060	3463588	27727	3463588	13864	35.9	75	71	70	4	1	8.0	79	79	NA	NA
	08/31/04 10:15	13.3	A	B	36	531285	3506813	28073	3506813	14037	36.0	75	71	70	4	1	8.0	79	79	NA	NA
	09/01/04 10:07	15.4	A	B	36	581385	3556913	28474	3556913	14237	35.0	74	71	70	3	1	7.3*	78	77	NA	NA
	09/02/04 11:30	17.2	A	B	36	635700	3611228	28909	3611228	14455	35.7	74	71	70	3	1	7.8	79	78	NA	NA
	09/03/04 11:30	16.4	A	B	36	687530	3663058	29324	3663058	14662	36.0	74	71	70	3	1	7.9	79	78	NA	NA

Table A-1. US EPA Arsenic Demonstration Project at Valley Vista, AZ – Daily System Operation Log Sheet (Continued)

			Tank Position		Treatment System							Pressure			ΔP			Backwash Water Recycle			
Week No.	Date & Time	Run Time	Lead	Lag	Flow rate	Totalizer	Cum Throughput TA	Bed Volume TA	Cum Throughput TB	Bed Volume TB	Avg Flowrate	Inlet	Between Tanks	Outlet	Inlet - Between	Between - Outlet	In-line pH	Bag Filter Inlet Pressure	Bag Filter Outlet Pressure	Recycle Flow	Acid Tank Level
		hr	A/B	A/B	gpm	gal	gal		gal		gpm	psig	psig	psig	psi	psi	S.U.	psig	psig	gpm	gal
12	09/07/04 11:00	64.3	A	B	36	893650	3869178	30974	3869178	15487	36.0	74	71	70	3	1	7.9	79	78	NA	NA
	09/08/04 10:17	15.5	A	B	35	943885	3919413	31376	3919413	15688	36.0	74	71	70	3	1	7.9	79	78	NA	NA
	09/09/04 13:50	18.5	A	B	35	3356	3978884	31852	3978884	15926	36.0	74	71	70	3	1	7.9	79	78	NA	NA
	09/10/04 14:05	15.6	A	B	36	55564	4031092	32270	4031092	16135	35.9	75	71	70	4	1	7.9	79	78	NA	NA
13	09/13/04 09:40	45.1	A	B	36	200890	4176418	33434	4176418	16717	35.8	75	71	70	4	1	7.9	79	78	NA	NA
	09/14/04 14:05	18.2	A	B	37	260530	4236058	33911	4236058	16956	35.0	75	71	70	4	1	7.9	110	110	2	NA
	09/15/04 10:00	12.8	A	B	36	303780	4279308	34257	4279308	17129	36.2	74	71	70	3	1	7.9	78	78	NA	NA
	09/16/04 17:40	20.8	A	B	36	372350	4347878	34806	4347878	17403	36.1	74	71	70	3	1	7.9	78	78	NA	NA
	09/17/04 12:20	12.0	A	B	36	412570	4388098	35128	4388098	17564	35.9	74	71	70	3	1	7.9	79	78	NA	55
14	09/20/04 13:35	47.0	A	B	36	569930	4545458	36388	4545458	18194	35.8	76	72	71	4	1	7.2	81	80	NA	NA
	09/21/04 11:55	14.6	A	B	36	618230	4593758	36775	4593758	18387	36.0	76	72	71	4	1	7.2	80	79	NA	NA
	09/22/04 09:05	14.0	A	B	36	663870	4639398	37140	4639398	18570	35.9	75	72	71	3	1	7.2	80	78	NA	NA
	09/23/04 13:26	18.8	A	B	36	724980	4700508	37629	4700508	18815	35.9	75	71	70	4	1	7.2	80	79	NA	34
	09/24/04 13:20	16.0	A	B	36	776630	4752158	38043	4752158	19021	36.0	75	72	71	3	1	7.2	79	79	NA	NA
15	09/27/04 13:45	46.0	A	B	35	933095	4908623	39295	4908623	19648	36.0	75	71	70	4	1	7.2	79	79	NA	22
	09/28/04 13:20	14.4	A	B	36	983890	4959418	39702	4959418	19851	35.9	75	72	70	3	2	7.2	79	79	NA	NA
	09/29/04 09:50	12.5	A	B	36	28230	5003758	40057	5003758	20028	36.0	74	71	70	3	1	7.2	79	78	NA	NA
	09/30/04 14:15	17.3	A	B	36	89593	5065121	40548	5065121	20274	36.0	75	72	71	3	1	7.2	80	79	NA	NA
	10/01/04 13:50	14.4	A	B	36	140530	5116058	40956	5116058	20478	36.0	75	72	71	3	1	7.2	80	79	NA	8
16	10/04/04 14:00	46.4	A	B	36	296207	5271735	42202	5271735	21101	36.0	75	72	71	3	1	7.2	80	79	NA	54
	10/05/04 10:45	13.1	A	B	36	341307	5316835	42563	5316835	21282	36.2	75	72	71	3	1	7.2	80	79	NA	52
	10/06/04 09:45	14.7	A	B	36	391229	5366757	42963	5366757	21481	36.2	75	72	70	3	2	7.2	79	78	NA	50
	10/07/04 13:30	17.5	A	B	36	451156	5426684	43443	5426684	21721	36.0	75	72	71	3	1	7.2	79	78	NA	NA
	10/08/04 17:45	18.3	A	B	36	512237	5487765	43932	5487765	21966	36.0	75	72	71	3	1	7.1	79	78	NA	NA
17	10/12/04 13:00	58.3	A	B	36	707526	5683054	45495	5683054	22748	35.7	75	72	71	3	1	7.2	79	78	NA	32
	10/13/04 09:45	13.1	A	B	36	751266	5726794	45845	5726794	22923	35.1	75	72	71	3	1	7.9	79	78	NA	32
	10/14/04 14:15	18.5	A	B	35	813345	5788873	46342	5788873	23171	36.3	75	72	71	3	1	7.9	80	79	NA	NA
	10/15/04 14:30	15.4	A	B	36	866000	5841528	46764	5841528	23382	36.2	75	72	71	3	1	7.9	80	79	NA	NA
18	10/18/04 10:50	43.5	A	B	36	14290	5989818	47951	5989818	23975	36.2	75	72	71	3	1	7.9	80	79	NA	NA
	10/19/04 10:00	14.9	A	B	36	65148	6040676	48358	6040676	24179	36.6	75	72	71	3	1	7.2	80	79	NA	30
	10/20/04 11:50	16.6	A	B	37	121356	6096884	48808	6096884	24404	36.3	76	73	72	3	1	7.1	109	108	4.6	28
	10/21/04 12:25	15.7	A	B	36	174490	6150018	49233	6150018	24617	36.0	75	72	71	3	1	7.1	80	79	NA	26
	10/22/04 14:55	16.5	A	B	36	232293	6207821	49696	6207821	24848	36.4	76	73	72	3	1	7.1	80	79	NA	22
19	10/25/04 15:00	41.2	NA	NA	NA	374531	0	0	0	0	NA	NA	NA	NA	NA	NA	7.1	NA	NA	NA	NA
	10/26/04 13:30	11.1	A	B	36	411103	36572	222	36572	111	27.1	76	73	71	3	2	7.1	81	80	NA	10
	10/27/04 11:40	14.4	A	B	36	448897	74366	452	74366	226	28.4	76	73	72	3	1	7.1	81	80	NA	63
	10/28/04 10:50	14.6	A	B	36	508900	134369	817	134369	408	43.2	76	73	72	3	1	7.1	81	80	NA	61
	10/29/04 12:40	16.3	A	B	36	565237	190706	1159	190706	579	36.3	76	73	72	3	1	7.1	81	79	NA	58
20	11/01/04 10:00	42.5	A	B	36	713453	338922	2060	338922	1030	35.6	76	73	72	3	1	7.1	82	81	NA	51
	11/02/04 09:45	15.0	A	B	36	766478	391947	2382	391947	1191	37.2	76	73	72	3	1	7.1	82	79	NA	48
	11/03/04 09:50	15.0	A	B	36	818612	444081	2699	444081	1349	36.1	76	73	72	3	1	7.1	82	79	NA	45
	11/04/04 14:40	NA	A	B	36	880599	506068	3075	506068	1538	35.8	76	73	72	3	1	7.2	81	79	NA	41
	11/05/04 13:50	22.9	A	B	36	930338	555807	3378	555807	1689	36.2	76	73	72	3	1	7.1	81	79	NA	39
21	11/08/04 13:00	71.3	A	B	36	83922	709391	4311	709391	2155	35.9	77	74	73	3	1	7.1	81	80	NA	30
	11/09/04 09:30	20.5	A	B	36	128264	753733	4580	753733	2290	36.1	76	73	72	3	1	7.1	81	80	NA	27
	11/10/04 09:15	23.8	A	B	36	179798	805267	4893	805267	2447	36.1	76	73	72	3	1	7.2	81	79	NA	24
	11/12/04 11:40	50.5	A	B	36	289145	914614	5558	914614	2779	36.1	76	73	71	3	2	7.2	81	79	NA	19
22	11/15/04 10:50	71.2	A	B	36	443389	1068858	6495	1068858	3248	36.1	76	73	72	3	1	7.1	81	79	NA	10
	11/16/04 11:25	24.5	A	B	36	496782	1122251	6820	1122251	3410	36.3	76	73	72	3	1	7.1	81	79	NA	63
	11/17/04 11:00	23.5	A	B	36	547738	1173207	7129	1173207	3565	36.1	76	73	72	3	1	7.1	81	79	NA	60
	11/18/04 13:45	26.9	A	B	36	606003	1231472	7483	1231472	3742	36.1	76	72	71	4	1	7.2	81	79	NA	NA
	11/19/04 11:00	21.2	A	B	36	652019	1277488	7763	1277488	3882	36.2	76	73	71	3	2	7.1	81	79	NA	53

Table A-1. US EPA Arsenic Demonstration Project at Valley Vista, AZ – Daily System Operation Log Sheet (Continued)

			Tank Position		Treatment System							Pressure			ΔP			Backwash Water Recycle			
Week No.	Date & Time	Run Time	Lead	Lag	Flow rate	Totalizer	Cum Throughput TA	Bed Volume TA	Cum Throughput TB	Bed Volume TB	Avg Flowrate	Inlet	Between Tanks	Outlet	Inlet - Between	Between - Outlet	In-line pH	Bag Filter Inlet Pressure	Bag Filter Outlet Pressure	Recycle Flow	Acid Tank Level
		hr	A/B	A/B	gpm	gal	gal		gal		gpm	psig	psig	psig	psi	psi	S.U.	psig	psig	gpm	gal
23	11/22/04 11:25	70.9	A	B	36	805679	1431148	8697	1431148	4348	36.1	76	72	71	4	1	7.1	80	79	NA	42
	11/23/04 11:00	23.4	A	B	36	856977	1482446	9009	1482446	4504	36.5	76	72	71	4	1	7.1	81	79	NA	40
	11/24/04 11:15	23.5	A	B	37	907501	1532970	9316	1532970	4658	35.8	77	74	72	3	2	7.1	83	80	2	38
24	11/29/04 12:45	121.5	A	B	36	172782	1798251	10928	1798251	5464	36.4	76	73	71	3	2	7.1	101	79	NA	25
	11/30/04 12:00	23.3	A	B	36	223259	1848728	11234	1848728	5617	36.1	76	73	71	3	2	7.2	NA	NA	NA	22
	12/01/04 10:15	22.2	A	B	36	271789	1897258	11529	1897258	5765	36.4	76	73	71	3	2	7.1	NA	NA	NA	19.5
	12/02/04 11:00	24.8	A	B	36	325565	1951034	11856	1951034	5928	36.1	76	73	71	3	2	7.1	NA	NA	NA	18
	12/03/04 11:30	24.6	A	B	36	379341	2004810	12183	2004810	6091	36.4	76	73	71	3	2	7.2	NA	NA	NA	14
25	12/06/04 10:00	70.2	A	B	36	531705	2157174	13109	2157174	6554	36.2	76	73	71	3	2	7.1	NA	NA	NA	59
	12/07/04 13:40	27.8	A	B	36	592582	2218051	13479	2218051	6739	36.5	76	73	71	3	2	7.2	NA	NA	NA	55
	12/08/04 10:00	20.3	A	B	36	636518	2261987	13746	2261987	6873	36.1	76	73	71	3	2	7.2	NA	NA	NA	52
	12/09/04 14:00	28.3	A	B	36	698174	2323643	14120	2323643	7060	36.3	76	73	71	3	2	7.1	NA	NA	NA	48
	12/10/04 13:00	22.8	A	B	36	748362	2373831	14425	2373831	7213	36.7	76	73	71	3	2	7.1	NA	NA	NA	44
26	12/13/04 09:50	68.8	A	B	36	NA	NA	NA	NA	NA	NA	76	72	71	4	1	7.2	NA	NA	NA	32.5
	12/14/04 11:25	25.5	A	B	36	953024	2578493	15669	2578493	7835	NA	76	72	71	4	1	7.2	NA	NA	NA	28.5
	12/15/04 13:18	26.0	A	B	36	9579	2635048	16013	2635048	8006	36.3	76	72	71	4	1	7.2	NA	NA	NA	24.25
	12/16/04 11:40	22.3	A	B	36	58162	2683631	16308	2683631	8154	36.3	76	72	71	4	1	7.2	78	80	NA	20.25
	12/17/04 15:45	28.2	A	B	36	119385	2744854	16680	2744854	8340	36.2	76	72	71	4	1	7.2	80	79	NA	16
27	12/20/04 12:10	68.3	A	B	36	268249	2893718	17585	2893718	8792	36.3	76	72	71	4	1	7.2	82	79	NA	4
	12/21/04 12:25	23.3	A	B	36	319082	2944551	17893	2944551	8947	36.4	76	72	71	4	1	7.1	82	79	NA	56
	12/22/04 13:50	25.4	A	B	36	374418	2999887	18230	2999887	9115	36.3	76	72	71	4	1	7.2	82	79	NA	52
28	12/27/04 14:30	120.6	A	B	36	637460	3262929	19828	3262929	9914	36.4	76	72	71	4	1	7.2	82	79	NA	31
	12/28/04 14:00	23.7	A	B	36	689222	3314691	20143	3314691	10071	36.4	76	72	71	4	1	7.1	82	79	NA	27
	12/29/04 11:30	21.4	A	B	36	735780	3361249	20426	3361249	10213	36.3	76	72	71	4	1	7.2	82	79	NA	24
	12/30/04 14:30	26.9	A	B	36	794642	3420111	20783	3420111	10392	36.5	76	72	71	4	1	7.2	82	79	NA	20
29	01/03/05 13:10	94.9	A	B	36	1610	3627079	22041	3627079	11021	36.3	76	72	71	4	1	7.2	82	80	NA	3
	01/04/05 13:30	24.2	A	B	36	54790	3680259	22364	3680259	11182	36.6	76	72	71	4	1	7.2	82	80	NA	53
	01/05/05 09:50	20.4	A	B	36	98910	3724379	22632	3724379	11316	36.0	76	72	71	4	1	7.2	82	80	NA	50
	01/06/05 11:05	25.3	A	B	36	154035	3779504	22967	3779504	11484	36.3	76	72	70	4	2	7.2	82	79	NA	46
	01/07/05 12:15	25.1	A	B	36	208925	3834394	23301	3834394	11650	36.4	76	72	70	4	2	7.2	82	79	NA	42
30	01/10/05 11:45	71.5	A	B	36	364780	3990249	24248	3990249	12124	36.3	77	73	71	4	2	7.2	82	80	NA	29.5
	01/11/05 09:20	21.6	A	B	36	412030	4037499	24535	4037499	12268	36.5	76	72	70	4	2	7.2	82	80	NA	26
	01/12/05 08:30	23.2	A	B	36	462625	4088094	24843	4088094	12421	36.3	76	72	70	4	2	7.2	82	80	NA	22
	01/13/05 11:10	26.6	A	B	36	520840	4146309	25196	4146309	12598	36.5	76	72	70	4	2	7.2	NA	NA	NA	18
	01/14/05 11:35	24.5	A	B	36	574080	4199549	25520	4199549	12760	36.2	76	72	70	4	2	7.2	NA	NA	NA	14
31	01/17/05 14:45	75.1	A	B	36	737945	4363414	26516	4363414	13258	36.4	76	72	70	4	2	7.2	NA	NA	NA	58
	01/18/05 11:30	20.2	A	B	36	782060	4407529	26784	4407529	13392	36.4	76	72	70	4	2	7.2	NA	NA	NA	57
	01/19/05 09:40	21.4	A	B	36	828760	4454229	27068	4454229	13534	36.4	76	72	70	4	2	7.2	NA	NA	NA	56
	01/20/05 11:50	26.2	A	B	36	886000	4511469	27415	4511469	13708	36.4	76	72	70	4	2	7.2	NA	NA	NA	55.5
	01/21/05 11:38	23.7	A	B	36	937920	4563389	27731	4563389	13865	36.5	76	72	70	4	2	7.2	NA	NA	NA	55
32	01/24/05 11:00	71.4	A	B	36	94090	4719559	28680	4719559	14340	36.5	76	72	70	4	2	7.2	NA	NA	NA	55
	01/25/05 11:15	24.2	A	B	36	147060	4772529	29002	4772529	14501	36.5	76	72	70	4	2	7.2	NA	NA	NA	55
	01/26/05 10:10	22.6	A	B	36	196360	4821829	29301	4821829	14651	36.4	76	72	70	4	2	7.2	NA	NA	NA	54
	01/27/05 14:35	28.4	A	B	38	258780	4884249	29681	4884249	14840	36.6	78	73	71	5	2	7.2	111	110	2	53.5
	01/28/05 14:55	24.3	A	B	38	312450	4937919	30007	4937919	15003	36.8	78	73	71	5	2	7.2	110	108	2	53
33	01/31/05 11:15	68.4	A	B	36	462290	5087759	30917	5087759	15459	36.5	77	73	71	4	2	7.2	83	80	NA	52
	02/01/05 11:10	22.3	A	B	36	511320	5136789	31215	5136789	15608	36.6	76	72	70	4	2	7.2	81	79	NA	51.5
	02/02/05 09:50	22.7	A	B	36	561550	5187019	31521	5187019	15760	36.9	76	72	70	4	2	7.2	82	79	NA	51
	02/03/05 13:30	27.6	A	B	36	622220	5247689	31889	5247689	15945	36.6	76	72	70	4	2	7.2	82	79	NA	50.5
	02/04/05 16:10	26.7	A	B	36	680585	5306054	32244	5306054	16122	36.4	76	72	70	4	2	7.1	82	79	NA	50

Table A-1. US EPA Arsenic Demonstration Project at Valley Vista, AZ – Daily System Operation Log Sheet (Continued)

			Tank Position		Treatment System							Pressure			ΔP			Backwash Water Recycle			
Week No.	Date & Time	Run Time	Lead	Lag	Flow rate	Totalizer	Cum Throughput TA	Bed Volume TA	Cum Throughput TB	Bed Volume TB	Avg Flowrate	Inlet	Between Tanks	Outlet	Inlet - Between	Between - Outlet	In-line pH	Bag Filter Inlet Pressure	Bag Filter Outlet Pressure	Recycle Flow	Acid Tank Level
		hr	A/B	A/B	gpm	gal	gal		gal		gpm	psig	psig	psig	psi	psi	S.U.	psig	psig	gpm	gal
34	02/07/05 12:15	68.1	A	B	36	829900	5455369	33151	5455369	16576	36.5	77	73	71	4	2	6.8	83	80	NA	48
	02/08/05 14:30	26.3	A	B	36	887600	5513069	33502	5513069	16751	36.6	76	72	70	4	2	6.8	82	79	NA	44
	02/09/05 10:30	19.9	A	B	36	931250	5556719	33767	5556719	16884	36.6	76	72	70	4	2	6.8	82	79	NA	41.5
	02/10/05 13:30	27.0	A	B	36	990400	5615869	34127	5615869	17063	36.5	77	72	70	5	2	6.8	82	79	NA	39
	02/11/05 13:45	24.3	A	B	36	43640	5669109	34450	5669109	17225	36.5	77	73	70	4	3	6.8	82	79	NA	35.5
35	02/14/05 10:35	68.8	A	B	36	194370	5819839	35366	5819839	17683	36.5	77	73	71	4	2	6.8	83	80	NA	24
	02/15/05 11:55	25.3	A	B	36	249860	5875329	35703	5875329	17852	36.6	77	73	70	4	3	6.8	83	80	NA	20.5
	02/16/05 10:40	22.7	A	B	36	299590	5925059	36005	5925059	18003	36.5	77	72	70	5	2	6.8	83	80	NA	17
	02/17/05 11:45	25.1	A	B	36	354520	5979989	36339	5979989	18170	36.5	76	72	70	4	2	6.8	83	80	NA	12.5
	02/18/05 10:55	23.2	A	B	36	405430	6030899	36649	6030899	18324	36.6	77	73	70	4	3	6.8	83	80	NA	9
36	02/22/05 13:35	98.7	A	B	36	621700	6247169	37963	6247169	18981	36.5	77	73	70	4	3	6.9	83	80	NA	53
	02/23/05 10:30	20.9	A	B	36	667600	6293069	38242	6293069	19121	36.6	77	73	70	4	3	6.9	84	81	NA	51
	02/24/05 14:10	27.7	A	B	36	728350	6353819	38611	6353819	19305	36.6	77	72	70	5	2	6.9	83	80	NA	48.5
	02/25/05 15:10	25.0	A	B	36	783180	6408649	38944	6408649	19472	36.6	76	72	70	4	2	6.9	83	80	NA	46
37	02/28/05 13:30	70.3	A	B	36	937530	6562999	39882	6562999	19941	36.6	76	72	70	4	2	6.9	83	80	NA	39.5
	03/01/05 11:40	22.1	A	B	36	985980	6611449	40177	6611449	20088	36.5	76	72	70	4	2	6.9	83	80	NA	38
	03/02/05 11:35	23.2	A	B	38	36850	6662319	40486	6662319	20243	36.5	77	73	71	4	2	6.8	112	110	2	36
	03/03/05 13:55	26.3	A	B	36	95420	6720889	40842	6720889	20421	37.1	76	72	70	4	2	6.8	83	80	NA	32.5
	03/04/05 08:05	18.2	A	B	36	135570	6761039	41086	6761039	20543	36.8	76	72	70	4	2	6.8	83	80	NA	30
38	03/07/05 11:00	74.9	A	B	36	300330	6925799	42087	6925799	21043	36.7	77	72	70	5	2	6.8	84	80	NA	22
	03/08/05 14:20	27.3	A	B	36	360540	6986009	42453	6986009	21226	36.8	77	72	70	5	2	6.8	84	80	NA	19.5
	03/09/05 11:45	21.5	A	B	36	407670	7033139	42739	7033139	21370	36.5	76	72	70	4	2	6.8	84	80	NA	17.5
	03/10/05 13:15	26.0	A	B	37	463780	7089249	43080	7089249	21540	36.0	76	72	70	4	2	6.8	84	80	NA	14
	03/11/05 14:10	24.4	A	B	36	518600	7144069	43413	7144069	21707	37.4	76	72	70	4	2	6.8	84	80	NA	10
39	03/14/05 14:20	72.1	A	B	36	677360	7302829	44378	7302829	22189	36.7	77	73	71	4	2	6.8	84	80	NA	58
	03/15/05 13:40	23.4	A	B	37	728730	7354199	44690	7354199	22345	36.6	76	72	70	4	2	6.8	84	80	NA	56
	03/16/05 11:45	22.0	A	B	36	777200	7402669	44985	7402669	22492	36.7	76	72	70	4	2	6.8	84	80	NA	53
	03/17/05 13:50	25.3	A	B	37	832800	7458269	45322	7458269	22661	36.6	76	72	70	4	2	6.8	82	79	NA	50
	03/18/05 12:00	22.2	A	B	37	881650	7507119	45619	7507119	22810	36.7	77	73	71	4	2	6.8	83	80	NA	48.5
40	03/21/05 14:25	74.4	A	B	36	45380	7670849	46614	7670849	23307	36.7	76	72	70	4	2	6.8	83	80	NA	44
	03/22/05 13:20	23.0	A	B	37	95900	7721369	46921	7721369	23461	36.6	77	72	70	5	2	6.8	83	80	NA	42
	03/23/05 09:20	20.0	A	B	36	140039	7765508	47190	7765508	23595	36.8	76	72	70	4	2	6.8	83	80	NA	41
	03/24/05 13:40	28.3	A	B	37	202250	7827719	47568	7827719	23784	36.6	77	73	71	4	2	6.6	84	81	NA	39.5
	03/25/05 14:35	24.9	A	B	37	257075	7882544	47901	7882544	23950	36.7	77	73	71	4	2	6.6	83	80	NA	37.5
41	03/28/05 10:35	68.0	A	B	37	406700	8032169	48810	8032169	24405	36.7	76	72	70	4	2	6.6	83	80	NA	29
	03/29/05 13:10	25.8	A	B	38	463750	8089219	49157	8089219	24578	36.9	78	73	71	5	2	6.6	112	108	2	26
	03/30/05 09:30	20.3	A	B	36	508700	8134169	49430	8134169	24715	36.9	76	72	70	4	2	6.6	83	80	NA	22
	03/31/05 08:00	22.5	A	B	36	558950	8184419	49735	8184419	24868	37.2	76	72	70	4	2	6.6	83	80	NA	19
	04/01/05 11:40	13.9	A	B	36	589560	8215029	49921	8215029	24961	36.7	76	72	70	4	2	6.6	83	80	NA	17.5
42	04/04/05 11:55	72.3	A	B	37	748300	8373769	50886	8373769	25443	36.6	76	72	70	4	2	6.6	83	80	NA	10
	04/05/05 15:25	27.4	A	B	36	808590	8434059	51252	8434059	25626	36.7	76	72	70	4	2	6.6	83	80	NA	61.5
	04/06/05 10:45	19.3	A	B	37	851050	8476519	51510	8476519	25755	36.7	76	72	70	4	2	6.6	84	81	NA	59
	04/07/05 16:45	23.8	A	B	36	903350	8528819	51828	8528819	25914	36.6	76	72	70	4	2	6.6	84	81	NA	56
	04/08/05 13:55	21.2	A	B	36	949750	8575219	52110	8575219	26055	36.5	77	73	70	4	3	6.6	85	82	NA	53
43	04/11/05 14:40	72.7	A	B	37	109550	8735019	53081	8735019	26541	36.6	76	72	70	4	2	6.6	85	82	NA	45
	04/12/05 11:55	21.3	A	B	36	156500	8781969	53366	8781969	26683	36.7	76	72	70	4	2	6.6	85	82	NA	42
	04/13/05 10:10	22.3	A	B	36	205330	8830799	53663	8830799	26832	36.5	77	72	70	5	2	6.6	85	82	NA	39
	04/14/05 13:20	27.1	A	B	36	265040	8890509	54026	8890509	27013	36.7	77	72	70	5	2	6.6	85	82	NA	36
	04/15/05 15:25	26.1	A	B	36	322370	8947839	54374	8947839	27187	36.6	78	72	70	6	2	6.6	86	83	NA	32

Table A-1. US EPA Arsenic Demonstration Project at Valley Vista, AZ – Daily System Operation Log Sheet (Continued)

			Tank Position		Treatment System							Pressure			ΔP			Backwash Water Recycle			
Week No.	Date & Time	Run Time	Lead	Lag	Flow rate	Totalizer	Cum Throughput TA	Bed Volume TA	Cum Throughput TB	Bed Volume TB	Avg Flowrate	Inlet	Between Tanks	Outlet	Inlet - Between	Between - Outlet	In-line pH	Bag Filter Inlet Pressure	Bag Filter Outlet Pressure	Recycle Flow	Acid Tank Level
		hr	A/B	A/B	gpm	gal	gal		gal		gpm	psig	psig	psig	psi	psi	S.U.	psig	psig	gpm	gal
44	04/18/05 10:10	66.7	A	B	37	468770	9094239	55264	9094239	27632	36.6	77	72	70	5	2	6.6	84	80	NA	23
	04/19/05 13:45	27.7	A	B	36	529500	9154969	55633	9154969	27817	36.5	78	72	70	6	2	6.6	85	81	NA	20.5
	04/20/05 10:45	20.6	A	B	37	575080	9200549	55910	9200549	27955	36.9	76	72	70	4	2	6.6	84	80	NA	19
	04/21/05 13:55	27.2	A	B	37	635075	9260544	56275	9260544	28137	36.8	77	72	70	5	2	6.6	84	81	NA	16
	04/22/05 11:45	21.8	A	B	36	683230	9308699	56567	9308699	28284	36.8	76	72	70	4	2	6.6	84	81	NA	13
45	04/25/05 11:10	71.4	A	B	37	840830	9466299	57525	9466299	28762	36.8	77	72	70	5	2	6.6	84	81	NA	7
	04/26/05 11:50	2.0	A	B	38	845400	9470869	57553	9470869	28776	38.1	77	73	71	4	2	6.6	110	107	2	62
	04/27/05 10:05	22.3	A	B	37	895000	9520469	57854	9520469	28927	37.1	76	72	70	4	2	6.6	83	80	NA	60
	04/28/05 13:25	27.3	A	B	36	955740	9581209	58223	9581209	29112	37.1	78	74	72	4	2	6.6	85	82	NA	58
	04/29/05 12:40	18.3	B	A	38	996300	0	0	9621769	0	36.9	71	70	71	1	-1	6.6	76	72	NA	56
46	05/02/05 11:40	71.1	B	A	38	157780	161480	NA	9783249	NA	37.9	69	69	70	0	-1	6.6	77	72	NA	48
	05/03/05 12:20	24.6	B	A	37	214880	218580	NA	9840349	NA	38.7	69	70	70	-1	0	6.6	77	73	NA	44
	05/04/05 11:10	22.9	B	A	37	266850	270550	NA	9892319	NA	37.8	74	70	69	4	1	6.6	82	78	NA	41
	05/05/05 08:40	21.4	B	A	36	314500	318200	NA	9939969	NA	37.1	74	70	68	4	2	6.6	82	78	NA	39
	05/06/05 14:50	30.3	B	A	36	381350	385050	NA	10006819	NA	36.8	76	72	70	4	2	6.7	83	79	NA	34
47	05/09/05 11:45	68.9	B	A	36	533240	536940	NA	10158709	NA	36.7	76	72	70	4	2	6.6	84	80	NA	27.5
	05/10/05 10:45	23.0	B	A	37	584044	587744	NA	10209513	NA	36.8	76	72	70	4	2	6.6	83	79	NA	24
	05/11/05 09:50	23.1	B	A	36	635000	638700	NA	10260469	NA	36.8	76	72	70	4	2	6.6	83	79	NA	21.5
	05/12/05 11:55	26.0	B	A	36	692700	696400	NA	10318169	NA	37.0	76	72	70	4	2	6.6	84	80	NA	19
	05/13/05 12:20	23.9	B	A	36	745150	748850	NA	10370619	NA	36.6	76	72	70	4	2	6.6	83	79	NA	17
48	05/16/05 11:00	70.7	B	A	37	901300	905000	NA	10526769	NA	36.8	74	70	69	4	1	6.6	83	79	NA	9
	05/17/05 10:50	23.6	B	A	36	953370	957070	NA	10578839	NA	36.8	76	72	70	4	2	6.6	83	79	NA	6
	05/18/05 10:55	24.0	B	A	37	6535	1010235	NA	10632004	NA	36.9	75	71	70	4	1	6.6	83	79	NA	59
	05/19/05 11:00	24.2	B	A	37	59880	1063580	NA	10685349	NA	36.7	74	70	68	4	2	6.6	82	78	NA	57
	05/20/05 12:25	25.4	B	A	36	115980	1119680	NA	10741449	NA	36.8	76	71	69	5	2	6.6	84	87	NA	54
49	05/23/05 09:00	68.6	B	A	37	267990	1271690	NA	10893459	NA	36.9	74	70	67	4	3	6.6	83	84	NA	48
	05/24/05 13:50	28.8	B	A	37	331860	1335560	NA	10957329	NA	37.0	76	72	70	4	2	6.6	85	87	NA	46
	05/25/05 09:55	20.0	B	A	37	376220	1379920	NA	11001689	NA	37.0	75	71	69	4	2	6.6	83	86	NA	43
	05/26/05 13:20	27.5	B	A	36	436700	1440400	NA	11062169	NA	36.7	76	72	70	4	2	6.6	85	88	NA	40
	05/27/05 13:35	24.3	B	A	36	490204	1493904	NA	11115673	NA	36.7	76	72	69	4	3	6.6	85	87	NA	38
50	05/31/05 11:20	93.7	B	A	37	696620	1700320	NA	11322089	NA	36.7	76	72	70	4	2	6.6	85	87	NA	28
	06/01/05 09:10	21.1	B	A	37	743150	1746850	NA	11368619	NA	36.8	76	72	70	4	2	6.6	83	85	NA	25
	06/02/05 13:45	28.5	B	A	36	806150	1809850	NA	11431619	NA	36.8	77	73	70	4	3	6.6	113	116	2	22
	06/03/05 12:00	22.3	B	A	36	856500	1860200	NA	11481969	NA	37.6	76	72	70	4	2	6.6	83	86	NA	19.5
51	06/06/05 11:50	71.3	B	A	36	14900	2018600	NA	11640369	NA	37.0	76	72	70	4	2	6.6	83	86	NA	10
	06/07/05 14:00	26.6	B	A	36	72600	2076300	NA	11698069	NA	36.2	75	71	69	4	2	6.6	83	85	NA	62
	06/08/05 11:05	21.2	B	A	36	119200	2122900	NA	11744669	NA	36.6	76	72	70	4	2	6.6	83	86	NA	59
	06/09/05 14:00	26.8	B	A	37	178401	2182101	NA	11803870	NA	36.8	76	72	70	4	2	6.5	76	85	NA	52
	06/10/05 13:30	23.2	A	B	36	229598	2233298	NA	11855067	NA	36.8	76	72	70	4	2	6.5	78	86	NA	51
52	06/13/05 13:45	72.3	A	B	36	388650	2392350	NA	12014119	NA	36.7	76	72	70	4	2	6.6	77	86	NA	42
	06/14/05 12:00	22.2	A	B	37	437400	2441100	NA	12062869	NA	36.6	76	72	70	4	2	6.6	77	86	NA	40.5
	06/15/05 10:35	22.6	A	B	36	487100	2490800	NA	12112569	NA	36.7	76	72	70	4	2	6.6	77	86	NA	39
	06/16/05 10:30	23.9	A	B	36	539580	2543280	NA	12165049	NA	36.6	76	72	70	4	2	6.6	77	86	NA	37
	06/17/05 12:20	25.9	A	B	36	596503	2600203	NA	12221972	NA	36.6	76	72	70	4	2	6.5	77	86	NA	35
53	06/20/05 13:50	73.4	A	B	36	757650	2761350	NA	12383119	NA	36.6	76	72	70	4	2	6.6	77	86	NA	28
	06/21/05 13:55	24.1	A	B	36	810680	2814380	NA	12436149	NA	36.7	76	72	70	4	2	6.6	77	86	NA	25
	06/22/05 10:55	21.0	A/B	B/A	36	856900	2860600	NA	12482369	NA	36.7	76	72	70	4	2	6.6	77	86	NA	22
	06/23/05 13:45	26.9	B	A	36	915300	2919000	NA	12540769	NA	36.2	76	73	70	3	3	6.6	86	88	NA	20
	06/24/05 15:55	26.1	B	A	36	972500	2976200	NA	12597969	NA	36.5	77	73	71	4	2	6.6	86	88	NA	18

Table A-1. US EPA Arsenic Demonstration Project at Valley Vista, AZ – Daily System Operation Log Sheet (Continued)

			Tank Position		Treatment System							Pressure			ΔP			Backwash Water Recycle			
Week No.	Date & Time	Run Time	Lead	Lag	Flow rate	Totalizer	Cum Throughput TA	Bed Volume TA	Cum Throughput TB	Bed Volume TB	Avg Flowrate	Inlet	Between Tanks	Outlet	Inlet - Between	Between - Outlet	In-line pH	Bag Filter Inlet Pressure	Bag Filter Outlet Pressure	Recycle Flow	Acid Tank Level
		hr	A/B	A/B	gpm	gal	gal		gal		gpm	psig	psig	psig	psi	psi	S.U.	psig	psig	gpm	gal
54	06/27/05 11:00	67.6	B	A	36	119300	3123000	NA	12744769	NA	36.2	76	72	70	4	2	6.6	85	86	NA	10
	06/28/05 14:50	26.6	B	A	38	178600	3182300	NA	12804069	NA	37.2	77	73	71	4	2	6.6	113	116	2	63
	06/29/05 08:55	18.1	B	A	36	219200	3222900	NA	12844669	NA	37.4	76	72	70	4	2	6.6	85	85	NA	61
	06/30/05 14:00	29.1	B	A	36	282800	3286500	NA	12908269	NA	36.4	75	71	70	4	1	6.6	86	86	NA	59
	07/01/05 14:00	23.8	B	A	36	334900	3338600	NA	12960369	NA	36.5	76	72	70	4	2	6.6	90	88	NA	57
55	07/05/05 13:35	95.1	B	A	36	542400	3546100	NA	13167869	NA	36.4	76	72	70	4	2	6.6	89	88	NA	41
	07/06/05 10:45	21.1	B	A	36	588600	3592300	NA	13214069	NA	36.5	75	72	70	3	2	6.6	90	87	NA	39
	07/07/05 09:40	22.9	B	A	36	638600	3642300	NA	13264069	NA	36.4	76	72	70	4	2	6.6	90	87	NA	37
	07/08/05 11:00	25.2	B	A	36	693331	3697031	NA	13318800	NA	36.2	75	72	70	3	2	6.5	89	87	NA	34
56	07/11/05 14:10	75.0	B	A	36	856500	3860200	NA	13481969	NA	36.3	76	72	70	4	2	6.6	88	87	NA	29.5
	07/12/05 13:55	23.0	B	A	36	906300	3910000	NA	13531769	NA	36.1	75	72	70	3	2	6.6	91	89	NA	28
	07/13/05 08:40	18.7	B	A	36	946950	3950650	NA	13572419	NA	36.2	76	72	70	4	2	6.6	92	87	NA	27
	07/14/05 11:50	27.1	B	A	36	5782	3009482	NA	13631251	NA	36.2	NA	NA	NA	NA	NA	7.2	NA	NA	NA	NA
	07/15/05 14:00	2.8	B	A	36	11680	3015380	NA	13637149	NA	35.1	NA	NA	NA	NA	NA	7.2	NA	NA	NA	NA
57	07/18/05 13:15	71.4	B	A	36	166700	3170400	NA	13792169	NA	36.2	NA	NA	NA	NA	NA	7.3	NA	NA	NA	NA
	07/19/05 11:30	22.1	B	A	36	214500	3218200	NA	13839969	NA	36.0	NA	NA	NA	NA	NA	7.3	NA	NA	NA	NA
	07/20/05 14:50	27.3	B	A	36	273628	3277328	NA	13899097	NA	36.1	NA	NA	NA	NA	NA	7.3	NA	NA	NA	NA
	07/21/05 13:20	22.6	B	A	36	276048	3279748	NA	13901517	NA	NA	NA	NA	NA	NA	NA	7.3	NA	NA	NA	NA
	07/22/05 13:15	23.9	B	A	36	374596	3378296	NA	14000065	NA	NA	NA	NA	NA	NA	NA	7.3	NA	NA	NA	NA
58	07/26/05 09:35	92.3	B	A	36	574997	3578697	NA	14200466	NA	36.2	NA	NA	NA	NA	NA	7.3	NA	NA	NA	NA
	07/27/05 11:25	25.8	B	A	36	630900	3634600	NA	14256369	NA	36.1	NA	NA	NA	NA	NA	7.3	NA	NA	NA	NA
	07/28/05 11:45	24.3	B	A	36	683700	3687400	NA	14309169	NA	36.2	NA	NA	NA	NA	NA	7.3	NA	NA	NA	NA
	07/29/05 14:00	19.8	B	A	0	726557	3730257	NA	14352026	NA	36.1	NA	NA	NA	NA	NA	7.3	NA	NA	NA	NA
69	10/12/05 00:00	NA	NA	NA	NA	NA	NA	NA	NA	NA	NA	NA	NA	NA	NA	NA	NA	NA	NA	NA	NA
	10/13/05 08:55	NA	B	A	36	740859	0	0	0	0	NA	74	70	68	4	2	7.6	92	86	NA	NA
	10/14/05 14:05	21.1	B	A	36	786860	46001	140	46001	280	36.3	74	69	67	5	2	7.6	91	86	NA	NA
70	10/17/05 16:45	49.1	B	A	NA	893548	152689	464	152689	928	36.2	NA	NA	NA	NA	NA	NA	NA	NA	NA	NA
	10/18/05 11:00	11.4	B	A	36	918500	177641	540	177641	1079	36.5	75	70	68	5	2	7.6	92	85	NA	NA
	10/19/05 08:40	13.7	B	A	36	948357	207498	630	207498	1261	36.3	76	70	68	6	2	7.6	92	86	NA	NA
	10/20/05 15:05	22.4	B	A	36	997140	256281	779	256281	1557	36.3	75	70	68	5	2	7.4	92	87	NA	NA
	10/21/05 08:30	9.2	B	A	36	17456	276597	840	276597	1681	36.8	76	71	69	5	2	7.6	93	87	NA	NA
71	10/24/05 08:15	47.6	B	A	37	122300	381441	1159	381441	2318	36.7	76	70	69	6	1	7.6	93	86	NA	NA
	10/25/05 10:30	18.1	B	A	38	161950	421091	1279	421091	2559	36.5	76	71	69	5	2	7.6	93	87	NA	NA
	10/26/05 08:25	13.8	B	A	39	192270	451411	1372	451411	2743	36.6	76	70	69	6	1	7.5	93	86	NA	NA
	10/27/05 16:05	23.0	B	A	NA	242458	501599	1524	501599	3048	36.4	NA	NA	NA	NA	NA	7.5	NA	NA	NA	NA
	10/28/05 16:45	15.9	B	A	NA	277350	536491	1630	536491	3260	36.6	NA	NA	NA	NA	NA	7.6	NA	NA	NA	NA
72	10/31/05 12:05	44.3	B	A	36	374500	633641	1925	633641	3851	36.6	76	70	69	6	1	7.6	93	87	NA	NA
	11/01/05 15:25	19.3	B	A	36	416600	675741	2053	675741	4106	36.4	75	70	68	5	2	7.6	93	87	NA	NA
	11/02/05 09:15	9.7	B	A	36	437850	696991	2118	696991	4235	36.5	75	71	69	4	2	7.6	93	87	NA	NA
	11/03/05 10:45	17.4	B	A	36	475900	735041	2233	735041	4467	36.4	76	71	69	5	2	7.6	93	87	NA	NA
	11/04/05 08:30	13.7	B	A	36	505750	764891	2324	764891	4648	36.3	75	70	68	5	2	7.6	93	86	NA	NA
73	11/07/05 13:15	52.5	B	A	36	620670	879811	2673	879811	5346	36.5	74	70	68	4	2	7.7	92	87	NA	NA
	11/08/05 09:55	12.5	B	A	36	648200	907341	2757	907341	5514	36.7	75	70	69	5	1	7.7	93	87	NA	NA
	11/09/05 10:55	16.9	B	A	36	685150	944291	2869	944291	5738	36.4	75	70	69	5	1	7.7	93	87	NA	NA
	11/10/05 08:30	13.5	B	A	36	714750	973891	2959	973891	5918	36.5	75	70	69	5	1	7.6	93	87	NA	NA
74	11/14/05 09:25	63.8	B	A	37	854500	1113641	3384	1113641	6767	36.5	75	70	69	5	1	7.6	92	86	NA	NA
	11/15/05 11:40	18.1	B	A	38	894500	1153641	3505	1153641	7010	36.8	76	71	70	5	1	7.6	123	118	2	NA
	11/16/05 08:45	13.1	B	A	36	923400	1182541	3593	1182541	7186	36.8	75	70	69	5	1	7.6	92	85	NA	NA
	11/17/05 09:55	17.0	B	A	37	961200	1220341	3708	1220341	7416	37.1	75	70	69	5	1	7.6	93	86	NA	NA
	11/18/05 16:45	21.3	B	A	NA	8269	1267410	3851	1267410	7702	36.8	NA	NA	NA	NA	NA	7.5	NA	NA	NA	NA

Table A-1. US EPA Arsenic Demonstration Project at Valley Vista, AZ – Daily System Operation Log Sheet (Continued)

			Tank Position		Treatment System							Pressure			ΔP			Backwash Water Recycle			
Week No.	Date & Time	Run Time	Lead	Lag	Flow rate	Totalizer	Cum Throughput TA	Bed Volume TA	Cum Throughput TB	Bed Volume TB	Avg Flowrate	Inlet	Between Tanks	Outlet	Inlet - Between	Between - Outlet	In-line pH	Bag Filter Inlet Pressure	Bag Filter Outlet Pressure	Recycle Flow	Acid Tank Level
		hr	A/B	A/B	gpm	gal	gal		gal		gpm	psig	psig	psig	psi	psi	S.U.	psig	psig	gpm	gal
75	11/21/05 17:00	47.7	B	A	NA	113078	1372219	4169	1372219	8339	36.6	NA	NA	NA	NA	NA	7.6	NA	NA	NA	NA
	11/22/05 15:35	15.9	B	A	NA	148035	1407176	4276	1407176	8551	36.6	NA	NA	NA	NA	NA	7.6	NA	NA	NA	NA
	11/23/05 14:55	15.6	B	A	37	182365	1441506	4380	1441506	8760	36.7	74	70	68	4	2	7.6	91	86	NA	NA
76	11/28/05 09:35	74.3	B	A	36	345350	1604491	4875	1604491	9750	36.6	76	70	69	6	1	7.6	93	86	NA	NA
	11/29/05 10:40	16.9	B	A	37	382500	1641641	4988	1641641	9976	36.6	75	70	69	5	1	7.6	92	86	NA	NA
	11/30/05 08:25	13.7	B	A	36	412500	1671641	5079	1671641	10158	36.5	75	70	69	5	1	7.6	92	86	NA	NA
	12/01/05 13:25	20.9	B	A	36	458500	1717641	5219	1717641	10438	36.7	74	70	69	4	1	7.7	92	87	NA	NA
77	12/05/05 11:35	61.8	B	A	36	593950	1853091	5630	1853091	11261	36.5	76	70	69	6	1	7.7	93	87	NA	NA
	12/06/05 11:55	16.2	B	A	36	629500	1888641	5738	1888641	11477	36.6	75	70	69	5	1	7.7	92	87	NA	NA
	12/07/05 08:55	13.0	B	A	36	657800	1916941	5824	1916941	11649	36.3	75	70	69	5	1	7.6	92	86	NA	NA
	12/08/05 16:00	22.2	B	A	NA	706500	1965641	5972	1965641	11945	36.6	NA	NA	NA	NA	NA	7.6	NA	NA	NA	NA
	12/09/05 13:40	14.3	B	A	36	737900	1997041	6068	1997041	12136	36.6	75	70	69	5	1	7.6	92	87	NA	NA
78	12/13/05 13:35	63.6	B	A	36	877000	2136141	6490	2136141	12981	36.5	75	70	69	5	1	7.7	92	87	NA	NA
	12/14/05 10:40	13.0	B	A	36	905400	2164541	6577	2164541	13154	36.4	75	70	69	5	1	7.7	92	86	NA	NA
	12/15/05 10:40	15.9	B	A	37	940300	2199441	6683	2199441	13366	36.6	75	70	69	5	1	7.6	92	86	NA	NA
	12/16/05 08:20	13.6	B	A	36	970100	2229241	6773	2229241	13547	36.5	75	70	69	5	1	7.6	92	86	NA	NA
79	12/21/05 11:40	82.8	B	A	36	151700	2410841	7325	2410841	14650	36.6	75	70	69	5	1	7.7	92	87	NA	NA
	12/22/05 13:25	17.7	B	A	36	190400	2449541	7443	2449541	14885	36.4	75	70	69	5	1	7.7	92	87	NA	NA
80	12/27/05 14:30	80.7	B	A	37	367433	2626574	7981	2626574	15961	36.6	75	70	69	5	1	7.7	92	87	NA	NA
	12/28/05 09:00	10.2	B	A	36	389900	2649041	8049	2649041	16098	36.7	75	70	69	5	1	7.7	92	87	NA	NA
	12/29/05 14:45	21.8	B	A	36	437600	2696741	8194	2696741	16388	36.5	75	70	69	5	1	7.6	92	87	NA	NA
	12/30/05 15:15	16.4	B	A	36	473500	2732641	8303	2732641	16606	36.5	74	70	69	4	1	7.7	92	87	NA	NA
81	01/03/06 14:05	62.5	B	A	37	610700	2869841	8720	2869841	17439	36.6	74	70	68	4	2	7.8	92	87	NA	NA
	01/04/06 09:50	11.6	B	A	36	636100	2895241	8797	2895241	17594	36.5	75	70	69	5	1	7.7	92	87	NA	NA
	01/05/06 11:40	17.0	B	A	38	673700	2932841	8911	2932841	17822	36.9	75	70	69	5	1	7.8	123	119	2	NA
	01/06/06 14:50	19.0	B	A	36	715990	2975131	9040	2975131	18079	37.1	74	70	68	4	2	7.7	91	87	NA	NA
82	01/09/06 16:45	49.0	B	A	NA	823600	3082741	9367	3082741	18733	36.6	NA	NA	NA	NA	NA	7.6	NA	NA	NA	NA
	01/10/06 11:20	11.2	B	A	36	848400	3107541	9442	3107541	18884	36.9	74	70	69	4	1	7.7	91	86	NA	NA
	01/11/06 08:55	13.5	B	A	36	878300	3137441	9533	3137441	19066	36.9	74	70	69	4	1	7.7	92	86	NA	NA
	01/12/06 11:55	18.9	B	A	37	920400	3179541	9661	3179541	19321	37.1	74	70	68	4	2	7.7	92	86	NA	NA
	01/13/06 08:30	12.5	B	A	36	947900	3207041	9744	3207041	19489	36.7	74	70	69	4	1	7.7	92	86	NA	NA
83	01/16/06 10:25	49.6	B	A	37	57100	3316241	10076	3316241	20152	36.7	74	70	68	NA	NA	7.7	92	86	NA	NA
	01/17/06 15:35	21.1	B	A	37	103500	3362641	10217	3362641	20434	36.7	74	70	68	4	2	7.8	92	86	NA	NA
	01/18/06 10:25	10.7	B	A	36	127300	3386441	10289	3386441	20579	37.1	74	70	68	4	2	7.7	92	86	NA	NA
	01/19/06 10:25	17.0	B	A	37	164700	3423841	10403	3423841	20806	36.7	74	70	68	4	2	7.7	92	86	NA	NA
84	01/23/06 11:35	63.7	B	A	36	305000	3564141	10829	3564141	21659	36.7	74	70	68	4	2	7.7	92	86	NA	NA
	01/24/06 14:15	18.6	B	A	37	346000	3605141	10954	3605141	21908	36.7	74	70	68	4	2	7.7	92	86	NA	NA
	01/25/06 09:00	10.6	B	A	37	369300	3628441	11025	3628441	22049	36.6	74	70	68	4	2	7.7	92	86	NA	NA
	01/26/06 15:55	22.9	B	A	37	419700	3678841	11178	3678841	22356	36.7	74	70	68	4	2	7.7	92	86	NA	NA
	01/27/06 15:50	15.8	B	A	37	454600	3713741	11284	3713741	22568	36.8	74	70	68	4	2	7.8	92	87	NA	NA
85	01/30/06 13:10	45.0	B	A	37	553900	3813041	11586	3813041	23171	36.8	74	70	68	4	2	7.7	92	87	NA	NA
	01/31/06 14:30	17.3	B	A	36	591900	3851041	11701	3851041	23402	36.6	74	70	68	4	2	7.7	92	87	NA	NA
	02/01/06 15:45	17.1	B	A	36	629600	3888741	11816	3888741	23631	36.7	74	70	68	4	2	7.7	92	87	NA	NA
	02/02/06 13:25	13.6	B	A	36	659600	3918741	11907	3918741	23813	36.8	74	70	68	4	2	7.0	92	87	NA	23.0
	02/03/06 15:20	17.8	B	A	37	698800	3957941	12026	3957941	24052	36.7	74	70	68	4	2	7.0	92	86	NA	21.5
86	02/06/06 11:50	44.3	B	A	36	796100	4055241	12321	4055241	24643	36.6	74	70	68	4	2	7.0	92	87	NA	19.0
	02/07/06 15:25	19.4	B	A	36	839000	4098141	12452	4098141	24904	36.9	74	70	68	4	2	7.0	91	87	NA	17.0
	02/08/06 11:55	12.4	B	A	36	866200	4125341	12534	4125341	25069	36.6	74	70	68	4	2	7.0	92	87	NA	15.0
	02/09/06 16:30	20.1	B	A	NA	910200	4169341	12668	4169341	25336	36.5	NA	NA	NA	NA	NA	NA	NA	NA	NA	13.0
	02/10/06 14:20	14.2	B	A	36	941400	4200541	12763	4200541	25526	36.6	74	70	68	4	2	7.0	92	87	NA	11.0

Table A-1. US EPA Arsenic Demonstration Project at Valley Vista, AZ – Daily System Operation Log Sheet (Continued)

			Tank Position		Treatment System							Pressure			ΔP			Backwash Water Recycle			
Week No.	Date & Time	Run Time	Lead	Lag	Flow rate	Totalizer	Cum Throughput TA	Bed Volume TA	Cum Throughput TB	Bed Volume TB	Avg Flowrate	Inlet	Between Tanks	Outlet	Inlet - Between	Between - Outlet	In-line pH	Bag Filter Inlet Pressure	Bag Filter Outlet Pressure	Recycle Flow	Acid Tank Level
		hr	A/B	A/B	gpm	gal	gal		gal		gpm	psig	psig	psig	psi	psi	S.U.	psig	psig	gpm	gal
87	02/13/06 11:55	45.3	B	A	37	41000	4300141	13066	4300141	26131	36.6	74	70	68	4	2	7.0	92	87	NA	8.0
	02/14/06 11:10	15.2	B	A	36	74400	4333541	13167	4333541	26334	36.6	74	70	68	4	2	7.0	92	87	NA	6.5
	02/15/06 09:00	13.7	B	A	36	104600	4363741	13259	4363741	26518	36.7	74	70	68	4	2	6.9	92	87	NA	5.0
	02/16/06 10:55	17.8	B	A	36	143800	4402941	13378	4402941	26756	36.7	74	70	68	4	2	6.9	92	86	NA	3.0
	02/17/06 16:00	21.0	B	A	36	189800	4448941	13518	4448941	27035	36.5	74	70	68	4	2	7.7	92	86	NA	1.0
89	02/28/06 08:30	165.5	NA	NA	NA	553594	4812735	14623	4812735	29246	36.6	NA	NA	NA	NA	NA	NA	NA	NA	NA	NA
	03/01/06 17:00	4.5	A	B	NA	563938	10344	63	10344	63	NA	NA	NA	NA	NA	NA	NA	NA	NA	NA	NA
	03/02/06 14:40	0.5	A	B	NA	565178	11584	70	11584	70	NA	NA	NA	NA	NA	NA	7.7	NA	NA	NA	NA
	03/03/06 16:00	0.0	A	B	NA	565178	11584	70	11584	70	NA	NA	NA	NA	NA	NA	NA	NA	NA	NA	NA
90	03/06/06 10:10	0.3	A	B	38	565700	12106	74	12106	74	NA	73	70	69	3	1	7.8	123	119	2.0	NA
	03/07/06 00:00	NA	NA	NA	NA	NA	NA	NA	NA	NA	NA	NA	NA	NA	NA	NA	NA	NA	NA	NA	NA
	03/08/06 09:40	40.1	A	B	37	656000	102406	622	102406	311	37.5	73	70	69	3	1	7.8	90	83	NA	NA
	03/09/06 13:15	27.6	A	B	37	718400	164806	1001	164806	501	37.7	72	69	68	3	1	7.8	90	84	NA	NA
	03/10/06 14:40	25.3	A	B	37	775000	221406	1345	221406	673	37.3	73	70	69	3	1	7.8	89	83	NA	NA
91	03/13/06 14:30	71.8	A	B	37	935882	382288	2323	382288	1162	37.3	73	70	69	3	1	7.8	90	84	NA	NA
	03/14/06 13:05	22.6	A	B	37	986250	432656	2629	432656	1315	37.1	72	69	68	3	1	7.8	90	84	NA	NA
	03/15/06 09:05	20.0	A	B	37	31100	477506	2902	477506	1451	37.4	72	69	68	3	1	7.8	89	83	NA	NA
	03/16/06 10:15	25.2	A	B	37	87493	533899	3244	533899	1622	37.3	72	69	68	3	1	7.8	89	83	NA	NA
	03/17/06 15:50	29.5	A	B	37	153700	600106	3647	600106	1823	37.4	73	69	68	4	1	7.8	89	84	NA	NA
92	03/20/06 15:35	71.9	A	B	37	314500	760906	4624	760906	2312	37.3	73	70	69	3	1	7.8	90	84	NA	NA
	03/21/06 11:15	19.6	A	B	37	358692	805098	4892	805098	2446	37.6	73	70	69	3	1	7.8	89	84	NA	NA
	03/22/06 14:05	26.8	A	B	37	418616	865022	5257	865022	2628	37.3	73	70	68	3	2	7.8	89	84	NA	NA
	03/23/06 14:05	24.1	A	B	37	472587	918993	5585	918993	2792	37.3	73	69	68	4	1	7.8	89	84	NA	NA
	03/24/06 10:00	19.9	A	B	37	517020	963426	5855	963426	2927	37.2	73	68	68	5	0	7.8	89	84	NA	NA
93	03/27/06 16:00	77.8	A	B	37	691172	1137578	6913	1137578	3456	37.3	73	70	68	3	2	7.7	89	84	NA	NA
	03/28/06 08:50	17.0	A	B	37	729481	1175887	7146	1175887	3573	37.6	73	70	68	3	2	7.7	89	84	NA	NA
	03/29/06 10:35	25.7	A	B	37	786818	1233224	7494	1233224	3747	37.2	73	70	68	3	2	7.7	90	84	NA	NA
	03/30/06 11:15	24.7	A	B	37	842035	1288441	7830	1288441	3915	37.3	73	70	68	3	2	7.7	89	84	NA	NA
	03/31/06 11:40	24.0	A	B	37	896944	1343350	8163	1343350	4082	38.1	73	70	68	3	2	7.7	88	84	NA	NA
94	04/03/06 10:25	71.4	A	B	37	55670	1502076	9128	1502076	4564	37.1	73	70	68	3	2	7.7	89	84	NA	NA
	04/04/06 12:00	25.4	A	B	37	112862	1559268	9475	1559268	4738	37.5	72	70	68	2	2	7.8	88	84	NA	NA
	04/05/06 09:15	21.2	A	B	37	159842	1606248	9761	1606248	4880	36.9	73	70	68	3	2	7.8	89	84	NA	NA
	04/06/06 11:45	25.9	A	B	39	217900	1664306	10114	1664306	5057	37.4	73	70	68	3	2	7.8	122	118	3.0	NA
	04/07/06 15:30	27.8	A	B	37	280640	1727046	10495	1727046	5247	37.6	72	68	67	4	1	7.8	89	84	NA	NA
95	04/10/06 14:45	71.2	A	B	37	440000	1886406	11463	1886406	5732	37.3	72	69	68	3	1	7.8	89	84	NA	NA
	04/11/06 10:10	19.4	A	B	37	483600	1930006	11728	1930006	5864	37.5	72	69	68	3	1	7.8	90	85	NA	NA
	04/12/06 08:55	22.8	A	B	37	534500	1980906	12038	1980906	6019	37.2	72	68	67	4	1	7.8	89	84	NA	NA
	04/13/06 15:30	25.1	A	B	37	590800	2037206	12380	2037206	6190	37.4	70	66	65	4	1	7.8	87	83	NA	NA
	04/14/06 14:45	23.3	A	B	37	642900	2089306	12696	2089306	6348	37.3	74	70	69	4	1	7.8	90	85	NA	NA
96	04/17/06 11:55	69.1	A	B	37	798100	2244506	13639	2244506	6820	37.4	72	68	67	4	1	7.8	89	84	NA	NA
	04/18/06 11:35	23.7	A	B	37	851200	2297606	13962	2297606	6981	37.3	72	69	68	3	1	7.8	90	85	NA	NA
	04/19/06 08:15	20.7	A	B	37	897700	2344106	14245	2344106	7122	37.4	72	69	68	3	1	7.8	90	84	NA	NA
	04/20/06 13:45	29.5	A	B	37	963986	2410392	14647	2410392	7324	37.4	72	68	67	4	1	7.8	89	84	NA	NA
	04/21/06 11:15	21.4	A	B	37	11866	2458272	14938	2458272	7469	37.3	72	68	67	4	1	7.8	89	84	NA	NA
97	04/24/06 11:40	72.5	A	B	37	174300	2620706	15926	2620706	7963	37.3	72	69	68	3	1	7.8	90	85	NA	NA
	04/25/06 10:05	22.4	A	B	37	224500	2670906	16231	2670906	8115	37.4	72	69	68	3	1	7.8	89	84	NA	NA
	04/26/06 09:05	23.0	A	B	37	275900	2722306	16543	2722306	8271	37.2	72	69	68	3	1	7.8	90	85	NA	NA
	04/27/06 11:25	26.4	A	B	37	335000	2781406	16902	2781406	8451	37.3	72	69	68	3	1	7.8	89	84	NA	NA
	04/28/06 13:35	28.1	A	B	37	398000	2844406	17285	2844406	8642	37.4	72	69	68	3	1	7.8	89	84	NA	NA

Table A-1. US EPA Arsenic Demonstration Project at Valley Vista, AZ – Daily System Operation Log Sheet (Continued)

Week No.	Date & Time	Run Time	Tank Position		Treatment System							Pressure			ΔP		In-line pH	Backwash Water Recycle			Acid Tank Level
			Lead	Lag	Flow rate	Totalizer	Cum Throughput TA	Bed Volume TA	Cum Throughput TB	Bed Volume TB	Avg Flowrate	Inlet	Between Tanks	Outlet	Inlet - Between	Between - Outlet		Bag Filter Inlet Pressure	Bag Filter Outlet Pressure	Recycle Flow	
		hr	A/B	A/B	gpm	gal	gal		gal		gpm	psig	psig	psig	psi	psi	S.U.	psig	psig	gpm	gal
98	05/01/06 09:35	66.0	A	B	37	545900	2992306	18184	2992306	9092	37.3	72	69	68	3	1	7.8	89	84	NA	NA
	05/02/06 15:45	30.1	A	B	37	613300	3059706	18593	3059706	9297	37.3	72	69	68	3	1	7.8	89	84	NA	NA
	05/03/06 09:05	17.4	A	B	37	652200	3098606	18830	3098606	9415	37.3	72	69	68	3	1	7.8	89	84	NA	NA
	05/04/06 11:10	25.4	A	B	37	709100	3155506	19175	3155506	9588	37.3	73	70	69	3	1	7.8	122	118	2.0	NA
	05/05/06 11:55	24.8	A	B	37	765200	3211606	19516	3211606	9758	37.7	72	69	68	3	1	7.8	89	84	NA	NA
99	05/08/06 11:00	71.0	A	B	37	924200	3370606	20483	3370606	10241	37.3	72	68	67	4	1	7.8	89	84	NA	NA
	05/10/06 10:10	47.2	A	B	37	29600	3476006	21123	3476006	10562	37.2	72	68	67	4	1	7.9	89	84	NA	NA
	05/11/06 15:30	29.4	A	B	37	95200	3541606	21522	3541606	10761	37.2	72	68	67	4	1	7.9	89	84	NA	NA
	05/12/06 15:25	23.9	A	B	37	148600	3595006	21846	3595006	10923	37.2	72	68	67	4	1	7.8	89	84	NA	NA
100	05/15/06 08:30	65.1	A	B	37	294000	3740406	22730	3740406	11365	37.2	72	68	67	4	1	7.9	89	84	NA	NA
	05/17/06 08:30	48.9	A	B	37	403400	3849806	23395	3849806	11697	37.3	72	68	67	4	1	7.9	89	84	NA	NA
101	05/22/06 13:30	124.1	A	B	37	680400	4126806	25078	4126806	12539	37.2	72	69	68	3	1	7.8	89	84	NA	NA
	05/24/06 10:45	45.1	A	B	37	781500	4227906	25692	4227906	12846	37.4	72	68	67	4	1	7.8	88	83	NA	NA
102	05/31/06 09:40	166.9	A	B	37	155800	4602206	27967	4602206	13983	37.4	70	67	66	3	1	7.8	88	82	NA	NA
103	06/05/06 12:00	122.3	A	B	37	429300	4875706	29629	4875706	14814	37.3	71	67	66	4	1	7.9	87	82	NA	NA
	06/07/06 09:30	45.5	A	B	37	530800	4977206	30246	4977206	15123	37.2	72	68	67	4	1	7.9	89	83	NA	NA
	06/09/06 11:15	49.7	A	B	37	642956	5089362	30927	5089362	15464	37.6	72	67	66	5	1	7.9	88	83	NA	NA
104	06/12/06 15:50	76.7	A	B	37	813200	5259606	31962	5259606	15981	37.0	71	68	67	3	1	7.9	88	83	NA	NA
	06/14/06 09:05	41.3	A	B	37	905400	5351806	32522	5351806	16261	37.2	71	68	67	3	1	7.9	88	82	NA	NA
105	06/19/06 11:55	122.8	A	B	37	179400	5625806	34187	5625806	17093	37.2	71	67	66	4	1	7.9	86	82	NA	NA
	06/21/06 14:15	50.3	A	B	37	291700	5738106	34869	5738106	17435	37.2	70	67	66	3	1	7.9	87	82	NA	NA
106	06/26/06 13:25	119.2	A	B	37	557500	6003906	36485	6003906	18242	37.2	70	67	66	3	1	7.9	87	82	NA	NA
	06/28/06 08:30	43.0	A	B	37	653700	6100106	37069	6100106	18535	37.3	70	67	66	3	1	7.9	87	82	NA	NA
107	07/03/06 11:35	122.5	A	B	37	927700	6374106	38734	6374106	19367	37.3	70	67	66	3	1	7.9	87	82	NA	NA
	07/05/06 10:20	46.8	A	B	37	32800	6479206	39373	6479206	19686	37.4	70	67	66	3	1	7.9	87	81	NA	NA
108	07/10/06 11:00	120.4	A	B	37	302300	6748706	41011	6748706	20505	37.3	70	67	66	3	1	7.9	88	82	NA	NA
	07/12/06 09:00	46.0	A	B	37	404900	6851306	41634	6851306	20817	37.2	70	67	66	3	1	7.9	88	82	NA	NA
109	07/17/06 09:55	120.9	A	B	37	674000	7120406	43269	7120406	21635	37.1	71	68	67	3	1	7.9	88	82	NA	NA
	07/19/06 09:25	47.5	A	B	37	779400	7225806	43910	7225806	21955	37.0	70	67	66	3	1	7.9	87	81	NA	NA
110	07/24/06 11:45	122.3	A	B	37	51423	7497829	45563	7497829	22781	37.1	70	67	66	3	1	7.9	87	81	NA	NA
	07/26/06 08:30	44.8	A	B	37	150800	7597206	46167	7597206	23083	37.0	71	68	67	3	1	7.9	88	82	NA	NA
111	07/31/06 11:45	122.6	A	B	37	424100	7870506	47828	7870506	23914	37.2	73	70	69	3	1	7.9	122	117	2.5	NA
	08/02/06 11:05	47.4	A	B	37	530200	7976606	48472	7976606	24236	37.3	72	70	68	2	2	8.0	88	83	NA	NA
112	08/07/06 13:45	122.7	A	B	37	803500	8249906	50133	8249906	25067	37.1	71	68	67	3	1	8.0	88	83	NA	NA
	08/09/06 11:40	44.8	A	B	37	903300	8349706	50740	8349706	25370	37.1	71	68	67	3	1	7.9	88	83	NA	NA
113	08/14/06 13:25	122.7	A	B	37	177300	8623706	52405	8623706	26202	37.2	70	66	65	4	1	7.9	87	82	NA	NA
	08/16/06 11:20	46.0	A	B	37	280100	8726506	53029	8726506	26515	37.2	70	67	66	3	1	7.9	88	82	NA	NA
114	08/21/06 11:50	120.5	A	B	37	549100	8995506	54664	8995506	27332	37.2	70	67	66	3	1	8.0	86	81	NA	NA
	08/23/06 11:10	47.3	A	B	37	654500	9100906	55304	9100906	27652	37.1	70	66	65	4	1	7.9	87	82	NA	NA
115	08/28/06 11:40	119.2	A	B	37	921400	9367806	56926	9367806	28463	37.3	70	67	66	3	1	7.9	87	81	NA	NA
	08/30/06 14:00	50.3	A	B	37	33600	9480006	57608	9480006	28804	37.2	71	68	67	3	1	8.0	88	82	NA	NA
116	09/06/06 11:20	164.6	A	B	37	402709	9849115	59851	9849115	29926	37.4	69	66	65	3	1	7.9	NA	NA	NA	NA
117	09/11/06 11:05	285.2	A	B	37	670600	10117006	61479	10117006	30740	37.2	70	67	66	3	1	7.9	87	82	NA	NA
	09/13/06 10:50	47.7	A	B	37	777400	10223806	62128	10223806	31064	37.3	70	67	66	3	1	7.9	87	82	NA	NA
118	09/18/06 10:00	119.0	A	B	37	43765	10490171	63747	10490171	31873	37.3	70	67	66	3	1	7.9	88	81	NA	NA
	09/19/06 00:00	NA	NA	NA	NA	NA	NA	NA	NA	NA	NA	NA	NA	NA	NA	NA	NA	NA	NA	NA	NA

Note: BV calculation for Media Run 1 (06/24/04-10/25/04) based on 16.7 ft^3 of media for lead tank and 33.4 ft^3 of media for lag tank.
Note: BV calculation for Media Run 2 (10/25/04-04/29/05) based on 22 ft^3 of media for lead tank and 44 ft^3 of media for lag tank.
Note: Media Run 2a (04/29/05-07/29/05) contained 22 ft^3 of media in Tank B and 16.7 ft^3 of media in Tank A. BV calculation not available due to tank switching.
Note: BV calculation after 10/13/05 (Media Runs 3 and 4) based on 22 ft^3 of media for lead tank and 44 ft^3 of media for lag tank.
Highlighted rows indicate backwash; highlighted columns indicate calculated values; NA = data not available

APPENDIX B

WATER QUALITY RESULTS

Table B-1. Analytical Results from Long-Term Sampling, Valley Vista, AZ

Sampling Date		06/30/04[c]				07/07/04				07/14/04				07/21/04			
Sampling Location / Parameter	Unit	IN	TA	TB	APC	IN	TA	TB	APC	IN	TA	TB	APC	IN	TA	TB	APC
Bed Volume	10^3	–	2.5	1.2	–	–	5.3	2.7	–	–	8.2	4.1	–	–	11.1	5.5	–
Alkalinity	mg/L[a]	153	169	153	–	153	161	157	–	156	160	156	–	164	160	156	–
Fluoride	mg/L	<0.1	<0.1	<0.1	–	–	–	–	–	–	–	–	–	–	–	–	–
Sulfate	mg/L	8.4	8.4	9.4	–	–	–	–	–	–	–	–	–	–	–	–	–
Nitrate (as N)	mg/L	1.0	1.0	0.9	–	–	–	–	–	–	–	–	–	–	–	–	–
Orthophosphate	mg/L[b]	<0.1	<0.1	<0.1	–	<0.1	<0.1	<0.1	–	<0.1	<0.1	<0.1	–	<0.1	<0.1	<0.1	–
Silica (as SiO_2)	mg/L	19.4	15.7	11.3	–	19.1	17.0	14.9	–	18.4	16.8	15.8	–	19.4	18.3	17.1	–
Turbidity	NTU	0.5	<0.1	<0.1	–	0.2	0.1	0.2	–	0.6	0.5	0.4	–	0.4	0.2	0.2	–
pH	–	7.8	7.7	7.6	7.7	7.7	7.7	7.6	7.7	7.6	7.7	7.6	7.7	7.9	7.7	7.7	7.7
Temperature	ºC	21.2	21.4	21.1	22.5	25.0	22.4	23.3	24.5	22.6	21.5	21.9	21.7	20.4	20.3	20.5	21.0
DO	mg/L	5.7	5.8	6.0	5.4	5.5	5.7	5.4	5.8	5.7	5.1	5.8	5.8	5.8	5.9	6.0	6.2
ORP	mV	370	430	407	513	189	197	206	226	183	429	381	536	182	186	202	540
Free Chlorine	mg/L	–	–	–	0.3	–	–	–	0.4	–	–	–	0.4	–	–	–	0.4
Total Chlorine	mg/L	–	–	–	0.3	–	–	–	0.4	–	–	–	0.4	–	–	–	0.5
Total Hardness	mg/L[a]	152.3	151.8	153.8	–	–	–	–	–	–	–	–	–	–	–	–	–
Ca Hardness	mg/L[a]	81.9	81.0	82.4	–	–	–	–	–	–	–	–	–	–	–	–	–
Mg Hardness	mg/L[a]	70.4	70.8	71.4	–	–	–	–	–	–	–	–	–	–	–	–	–
As (total)	µg/L	40.9	0.3	0.2	–	47.1	6.1	0.1	–	45.9	13.3	0.4	–	39.8	18.9	2.9	–
As (soluble)	µg/L	40.2	0.2	0.2	–	–	–	–	–	–	–	–	–	–	–	–	–
As (particulate)	µg/L	0.7	<0.1	<0.1	–	–	–	–	–	–	–	–	–	–	–	–	–
As (III)	µg/L	0.4	0.2	0.3	–	–	–	–	–	–	–	–	–	–	–	–	–
As (V)	µg/L	39.8	0.1	<0.1	–	–	–	–	–	–	–	–	–	–	–	–	–
Fe (total)	µg/L	<25	<25	39.3	–	<25	<25	<25	–	<25	<25	<25	–	<25	<25	<25	–
Fe (soluble)	µg/L	<25	25.0	<25	–	–	–	–	–	–	–	–	–	–	–	–	–
Mn (total)	µg/L	0.2	2.4	2.8	–	0.2	0.9	1.5	–	0.1	0.3	0.6	–	1.1	1.0	1.1	–
Mn (soluble)	µg/L	0.2	2.4	2.8	–	–	–	–	–	–	–	–	–	–	–	–	–
Al (total)	µg/L	<10	11.7	18.1	–	<10	<10	<10	–	<10	<10	<10	–	<10	<10	<10	–
Al (soluble)	µg/L	<10	<10	13.0	–	–	–	–	–	–	–	–	–	–	–	–	–

(a) As $CaCO_3$. (b) As P. (c) Bed volume based on 16.7 ft^3 of media for TA (lead tank) and 33.4 ft^3 of media for TB (lag tank). Temperature, DO, and ORP taken on 07/01/04.
IN = inlet; TA = after tank A; TB = after tank B; APC = after post-chlorination (field parameters only).

Table B-1. Analytical Results from Long-Term Sampling, Valley Vista, AZ (Continued)

Sampling Date		07/28/04				08/04/04				08/11/04				08/18/04			
Sampling Location / Parameter	Unit	IN	AC[c]	TA	TB	IN	AC	TA	TB	IN	AC	TA	TB	IN	AC	TA	TB
Bed Volume	10^3	–	–	14.0	7.0	–	–	16.9	8.4	–	–	19.8	9.9	–	–	22.7	11.3
Alkalinity	mg/L[a]	167	–	167	167	168	–	164	160	160	–	156	151	152	–	156	156
Fluoride	mg/L	0.1	–	0.1	0.1	–	–	–	–	–	–	–	–	–	–	–	–
Sulfate	mg/L	8.1	–	8.1	8.1	–	–	–	–	–	–	–	–	–	–	–	–
Nitrate (as N)	mg/L	0.8	–	0.8	0.8	–	–	–	–	–	–	–	–	–	–	–	–
Orthophosphate	mg/L[b]	<0.1	–	<0.1	<0.1	<0.1	–	<0.1	<0.1	<0.1	–	<0.1	<0.1	<0.1	–	<0.1	<0.1
Silica (as SiO_2)	mg/L	18.2	–	17.4	17.1	19.0	–	18.4	17.9	18.7	–	18.2	17.8	19.3	–	18.9	18.8
Turbidity	NTU	0.2	–	0.2	0.3	0.2	–	0.3	0.2	0.3	–	0.2	0.1	0.3	–	0.2	0.4
pH	–	7.8	7.7	7.7	7.7	7.6	7.9	7.7	7.7	8.3	7.9	7.9	7.8	7.7	7.7	7.7	7.7
Temperature	ºC	20.8	20.6	20.3	20.3	20.8	21.1	20.5	20.6	21.0	20.8	20.5	20.6	20.5	20.2	20.4	20.3
DO	mg/L	6.5	6.5	6.0	5.8	6.0	6.5	6.0	6.4	6.1	5.8	5.7	6.1	6.0	5.9	5.3	6.0
ORP	mV	196	571	612	621	186	560	608	633	196	570	605	606	179	586	622	635
Free Chlorine	mg/L	–	0.6	0.6	0.6	–	0.8	0.4	0.4	–	0.4	0.4	0.4	–	0.4	0.5	0.5
Total Chlorine	mg/L	–	0.6	0.7	0.7	–	0.9	0.4	0.4	–	0.4	0.4	0.4	–	0.5	0.5	0.5
Total Hardness	mg/L[a]	178	–	178	180	–	–	–	–	–	–	–	–	–	–	–	–
Ca Hardness	mg/L[a]	98.1	–	101	101	–	–	–	–	–	–	–	–	–	–	–	–
Mg Hardness	mg/L[a]	79.5	–	77.6	78.4	–	–	–	–	–	–	–	–	–	–	–	–
As (total)	µg/L	39.0	–	24.2	5.4	46.2	–	31.2	10.7	37.5	–	27.8	12.7	34.8	–	29.4	15.4
As (soluble)	µg/L	39.8	–	24.4	5.7	–	–	–	–	–	–	–	–	–	–	–	–
As (particulate)	µg/L	<0.1	–	<0.1	<0.1	–	–	–	–	–	–	–	–	–	–	–	–
As (III)	µg/L	0.5	–	0.4	0.4	–	–	–	–	–	–	–	–	–	–	–	–
As (V)	µg/L	39.3	–	24.0	5.3	–	–	–	–	–	–	–	–	–	–	–	–
Fe (total)	µg/L	<25	–	<25	<25	<25	–	<25	<25	<25	–	<25	<25	<25	–	28.3	<25
Fe (soluble)	µg/L	<25	–	<25	<25	–	–	–	–	–	–	–	–	–	–	–	–
Mn (total)	µg/L	0.1	–	<0.1	<0.1	0.2	–	<0.1	0.1	0.4	–	<0.1	0.4	0.4	–	0.4	0.2
Mn (soluble)	µg/L	0.1	–	<0.1	<0.1	–	–	–	–	–	–	–	–	–	–	–	–
Al (total)	µg/L	<10	–	<10	<10	–	–	–	–	<10	–	<10	<10	<10	–	29.1	11.1
Al (soluble)	µg/L	<10	–	<10	<10	–	–	–	–	–	–	–	–	–	–	–	–

(a) As $CaCO_3$. (b) As P. (c) Switched from post-chlorination to prechlorination on 07/27/04.
IN = inlet; TA = after tank A; TB = after tank B; AC = after prechlorination (field parameters only).

Table B-1. Analytical Results from Long-Term Sampling, Valley Vista, AZ (Continued)

Sampling Date		08/25/04				09/01/04				09/08/04				09/15/04			
Sampling Location / Parameter	Unit	IN	AC	TA	TB	IN	AC	TA	TB	IN	AC	TA	TB	IN	AC	TA	TB
Bed Volume	10^3	–	–	25.6	12.8	–	–	28.5	14.2	–	–	31.4	15.7	–	–	34.3	17.1
Alkalinity	mg/L[(a)]	160	–	156	156	157	–	161	157	153	–	157	161	158 162	–	162 162	162 162
Fluoride	mg/L	0.1	–	0.1	0.1	–	–	–	–	–	–	–	–	–	–	–	–
Sulfate	mg/L	8.3	–	8.3	8.3	–	–	–	–	–	–	–	–	–	–	–	–
Nitrate (as N)	mg/L	0.8	–	0.8	0.8	–	–	–	–	–	–	–	–	–	–	–	–
Orthophosphate	mg/L[(b)]	<0.1	–	<0.1	<0.1	<0.1	–	<0.1	<0.1	<0.1	–	<0.1	<0.1	<0.06 <0.06	–	<0.06 <0.06	<0.06 <0.06
Silica (as SiO_2)	mg/L	19.5	–	19.0	18.9	18.9	–	18.5	18.4	18.7	–	18.4	18.5	19.0 18.9	–	18.5 18.8	18.5 18.6
Turbidity	NTU	0.1	–	<0.1	<0.1	0.2	–	0.4	0.4	0.3	–	0.4	0.2	0.4 0.2	–	0.5 0.5	0.7 0.7
pH	–	7.7	7.7	7.7	7.7	7.8	7.8	7.7	7.7	7.7	7.7	7.7	7.8	7.7	7.7	7.7	7.7
Temperature	ºC	20.7	20.3	20.3	20.3	20.6	20.3	20.3	20.2	20.7	20.3	20.2	20.3	20.4	20.3	20.3	20.3
DO	mg/L	6.4	5.8	6.1	5.9	6.2	5.5	6.1	5.8	6.2	5.9	5.5	5.8	6.0	5.9	5.8	6.0
ORP	mV	187	572	603	604	194	594	609	618	207	572	605	604	201	585	605	612
Free Chlorine	mg/L	–	0.4	0.4	0.4	–	0.5	0.5	0.5	–	0.5	0.4	0.4	–	0.4	0.4	0.4
Total Chlorine	mg/L	–	0.4	0.5	0.5	–	0.5	0.5	0.5	–	0.5	0.5	0.5	–	0.4	–	0.4
Total Hardness	mg/L[(a)]	136	–	140	136	–	–	–	–	–	–	–	–	–	–	–	–
Ca Hardness	mg/L[(a)]	66.2	–	69.6	68.3	–	–	–	–	–	–	–	–	–	–	–	–
Mg Hardness	mg/L[(a)]	69.6	–	70.4	67.7	–	–	–	–	–	–	–	–	–	–	–	–
As (total)	µg/L	47.6	–	35.3	25.4	44.6	–	37.8	26.5	46.7	–	40.7	28.2	36.6 37.5	–	33.5 34.0	26.0 25.6
As (soluble)	µg/L	47.3	–	34.9	24.7	–	–	–	–	–	–	–	–	–	–	–	–
As (particulate)	µg/L	0.3	–	0.4	0.7	–	–	–	–	–	–	–	–	–	–	–	–
As (III)	µg/L	0.6	–	1.0	1.3	–	–	–	–	–	–	–	–	–	–	–	–
As (V)	µg/L	46.7	–	33.9	23.4	–	–	–	–	–	–	–	–	–	–	–	–
Fe (total)	µg/L	<25	–	<25	<25	<25	–	<25	<25	<25	–	<25	<25	<25 <25	–	<25 <25	<25 <25
Fe (soluble)	µg/L	<25	–	<25	<25	–	–	–	–	–	–	–	–	–	–	–	–
Mn (total)	µg/L	0.4	–	0.7	1.0	0.2	–	<0.1	<0.1	0.2	–	<0.1	<0.1	0.4 0.4	–	0.2 0.5	0.2 0.1
Mn (soluble)	µg/L	0.3	–	0.3	0.6	–	–	–	–	–	–	–	–	–	–	–	–
Al (total)	µg/L	–	–	–	–	<10	–	<10	<10	<10	–	<10	<10	<10 <10	–	<10 <10	10.7 10.2
Al (soluble)	µg/L	–	–	–	–	–	–	–	–	–	–	–	–	–	–	–	–

(a) As $CaCO_3$. (b) As P.
IN = inlet; TA = after tank A; TB = after tank B; AC = after prechlorination (field parameters only).

Table B-1. Analytical Results from Long-Term Sampling, Valley Vista, AZ (Continued)

Sampling Date		09/22/04[c]				09/29/04				10/13/04[d]				10/20/04[e]			
Sampling Location / Parameter	Unit	IN	AC	TA	TB	IN	AC	TA	TB	IN	AC	TA	TB	IN	AC	TA	TB
Bed Volume	10^3	–	–	37.1	18.6	–	–	40.1	20.0	–	–	45.8	22.9	–	–	48.8	24.4
Alkalinity	mg/L[a]	138	–	125	126	164	–	127	123	150	–	142	142	164	–	123	123
Fluoride	mg/L	0.1	–	0.1	<0.1	–	–	–	–	–	–	–	–	0.1	–	0.1	<0.1
Sulfate	mg/L	6.8	–	31	31	–	–	–	–	–	–	–	–	7.4	–	37	36
Nitrate (as N)	mg/L	0.8	–	0.8	0.8	–	–	–	–	–	–	–	–	0.8	–	0.8	0.8
Orthophosphate	mg/L[b]	<0.06	–	<0.06	<0.06	<0.06	–	<0.06	<0.06	<0.06	–	<0.06	<0.06	<0.06	–	<0.06	<0.06
Silica (as SiO_2)	mg/L	18.7	–	19.2	20.0	18.7	–	18.9	20.4	18.6	–	16.8	15.4	18.4	–	19.3	20.3
Turbidity	NTU	0.1	–	0.3	0.1	0.2	–	0.2	0.3	0.2	–	0.1	0.1	0.3	–	0.2	0.1
pH	–	7.8	6.9	6.9	6.9	7.8	6.9	6.9	6.8	7.7	7.8	7.6	7.4	7.8	6.9	6.8	6.8
Temperature	ºC	20.3	20.2	20.0	20.0	20.4	20.2	20.4	20.3	20.8	20.4	20.2	20.1	19.9	20.1	19.8	19.9
DO	mg/L	6.1	5.8	5.5	5.5	5.9	5.6	5.9	5.9	6.2	6.1	5.6	6.4	5.8	5.3	5.5	5.7
ORP	mV	209	623	652	661	181	671	710	722	213	608	638	653	212	654	672	678
Free Chlorine	mg/L	–	0.4	0.3	0.3	–	0.9	0.8	0.8	–	0.4	0.4	0.4	–	0.3	0.4	0.3
Total Chlorine	mg/L	–	0.5	0.4	0.4	–	0.9	0.8	0.8	–	0.6	0.4	0.4	–	0.3	0.4	0.4
Total Hardness	mg/L[a]	161	–	159	164	–	–	–	–	–	–	–	–	179	–	176	172
Ca Hardness	mg/L[a]	89.8	–	88.3	92.2	–	–	–	–	–	–	–	–	92.8	–	87.4	86.3
Mg Hardness	mg/L[a]	70.7	–	70.4	71.8	–	–	–	–	–	–	–	–	86.0	–	88.4	85.4
As (total)	µg/L	47.3	–	23.6	16.0	42.1	–	20.2	12.3	43.2	–	42.7	18.1	37.3[f]	–	28.3[f]	22.0[f]
As (soluble)	µg/L	47.4	–	23.8	16.1	–	–	–	–	–	–	–	–	39.6	–	24.7	20.1
As (particulate)	µg/L	<0.1	–	<0.1	<0.1	–	–	–	–	–	–	–	–	<0.1	–	3.6	1.9
As (III)	µg/L	0.8	–	0.8	0.9	–	–	–	–	–	–	–	–	1.0	–	1.1	1.3
As (V)	µg/L	46.6	–	23.0	15.2	–	–	–	–	–	–	–	–	38.6	–	23.6	18.8
Fe (total)	µg/L	32.2	–	34.0	52.7	<25	–	<25	<25	144	–	<25	<25	<25	–	<25	<25
Fe (soluble)	µg/L	<25	–	<25	<25	–	–	–	–	–	–	–	–	<25	–	<25	<25
Mn (total)	µg/L	0.4	–	0.5	19.2	0.4	–	0.3	0.2	60.2	–	<0.1	0.5	0.2	–	<0.1	<0.1
Mn (soluble)	µg/L	0.2	–	<0.1	0.1	–	–	–	–	–	–	–	–	0.1	–	<0.1	<0.1
Al (total)	µg/L	<10	–	<10	10.1	<10	–	<10	<10	<10	–	<10	<10	<10	–	<10	<10
Al (soluble)	µg/L	<10	–	<10	<10	–	–	–	–	–	–	–	–	<10	–	<10	<10

(a) As $CaCO_3$. (b) As P. (c) pH adjustment began 09/17/04. (d) pH adjustment turned off 10/13/04. (e) pH adjustment resumed on 10/19/04. (f) Samples reanalyzed.
IN = inlet; TA = after tank A; TB = after tank B; AC = after prechlorination and pH adjustment (field parameters only).

Table B-1. Analytical Results from Long-Term Sampling, Valley Vista, AZ (Continued)

Sampling Date		10/27/04[c]				11/03/04				11/10/04				11/17/04			
Sampling Location / Parameter	Unit	IN	AC	TA	TB	IN	AC	TA	TB	IN	AC	TA	TB	IN	AC	TA	TB
Bed Volume	10^3	–	–	0.5	0.2	–	–	2.7	1.3	–	–	4.9	2.4	–	–	7.1	3.6
Alkalinity	mg/L[a]	152	–	119	115	160	–	123	123	160	–	123	123	164	–	123	123
Fluoride	mg/L	–	–	–	–	–	–	–	–	–	–	–	–	–	–	–	–
Sulfate	mg/L	–	–	–	–	–	–	–	–	–	–	–	–	–	–	–	–
Nitrate (as N)	mg/L	–	–	–	–	–	–	–	–	–	–	–	–	–	–	–	–
Orthophosphate	mg/L[b]	<0.06	–	<0.06	<0.06	<0.06	–	<0.06	<0.06	<0.06	–	<0.06	<0.06	<0.06	–	<0.06	<0.06
Silica (as SiO_2)	mg/L	18.8	–	19.1	6.1	18.9	–	16.3	13.8	18.6	–	16.7	15.0	18.4	–	18.3	17.6
Turbidity	NTU	0.2	–	0.1	0.1	0.1	–	0.1	0.2	0.3	–	0.2	0.2	0.3	–	0.3	0.3
pH	–	7.5	6.8	6.7	6.8	8.0	6.8	6.8	6.8	8.0	6.9	6.9	6.9	7.9	6.8	6.9	6.8
Temperature	ºC	18.8	19.1	19.3	19.1	19.1	19.4	19.6	19.6	18.9	19.6	19.5	19.7	19.1	19.7	19.8	19.8
DO	mg/L	6.2	5.9	5.6	6.2	6.4	5.7	5.4	5.8	6.4	5.5	5.9	5.9	5.7	5.6	5.3	5.3
ORP	mV	227	635	668	669	217	660	701	704	212	694	707	721	218	699	724	751
Free Chlorine	mg/L	–	0.3	0.3	0.3	–	0.4	0.3	0.3	–	0.4	0.4	0.4	–	0.4	0.4	0.4
Total Chlorine	mg/L	–	0.4	0.4	0.4	–	0.4	0.4	0.4	–	0.4	0.5	0.5	–	0.5	0.5	0.5
Total Hardness	mg/L[a]	–	–	–	–	–	–	–	–	–	–	–	–	–	–	–	–
Ca Hardness	mg/L[a]	–	–	–	–	–	–	–	–	–	–	–	–	–	–	–	–
Mg Hardness	mg/L[a]	–	–	–	–	–	–	–	–	–	–	–	–	–	–	–	–
As (total)	µg/L	37.1	–	37.8[d]	0.3	36.2	–	0.3	0.2	36.4	–	0.1	<0.1	40.1	–	0.3	0.3
As (soluble)	µg/L	–	–	–	–	–	–	–	–	–	–	–	–	–	–	–	–
As (particulate)	µg/L	–	–	–	–	–	–	–	–	–	–	–	–	–	–	–	–
As (III)	µg/L	–	–	–	–	–	–	–	–	–	–	–	–	–	–	–	–
As (V)	µg/L	–	–	–	–	–	–	–	–	–	–	–	–	–	–	–	–
Fe (total)	µg/L	<25	–	<25	32.8	<25	–	<25	<25	<25	–	<25	<25	<25	–	<25	<25
Fe (soluble)	µg/L	–	–	–	–	–	–	–	–	–	–	–	–	–	–	–	–
Mn (total)	µg/L	0.4	–	0.5	1.1	0.3	–	0.1	0.2	0.2	–	<0.1	0.1	<0.1	–	<0.1	<0.1
Mn (soluble)	µg/L	–	–	–	–	–	–	–	–	–	–	–	–	–	–	–	–
Al (total)	µg/L	<10	–	12.5	12.6	<10	–	<10	<10	22.0	–	19.1	23.7	<10	–	<10	<10
Al (soluble)	µg/L	–	–	–	–	–	–	–	–	–	–	–	–	–	–	–	–

(a) As $CaCO_3$. (b) As P. (c) Media replaced 10/25/04. Bed volume based on 22 ft^3 of media for TA (lead tank) and 44 ft^3 of media for TB (lag tank). (d) Rerun result similar to original result.
IN = inlet; TA = after tank A; TB = after tank B; AC = after prechlorination and pH adjustment (field parameters only).

Table B-1. Analytical Results from Long-Term Sampling, Valley Vista, AZ (Continued)

Sampling Date		12/01/04				12/08/04				12/15/04				01/05/05			
Sampling Location Parameter	Unit	IN	AC	TA	TB	IN	AC	TA	TB	IN	AC	TA	TB	IN	AC	TA	TB
Bed Volume	10^3	–	–	11.5	5.8	–	–	13.7	6.9	–	–	16.0	8.0	–	–	22.6	11.3
Alkalinity	mg/L[a]	160 156	–	120 128	124 124	154	–	122	122	155	–	114	114	NA[d]	–	112	112
Fluoride	mg/L	–	–	–	–	–	–	–	–	<0.1	–	<0.1	<0.1	–	–	–	–
Sulfate	mg/L	–	–	–	–	–	–	–	–	8.1	–	50	45	–	–	–	–
Nitrate (as N)	mg/L	–	–	–	–	–	–	–	–	0.8	–	0.7	<0.04[c]	–	–	–	–
Orthophosphate	mg/L[b]	<0.06 <0.06	–	<0.06 <0.06	<0.06 <0.06	<0.06	–	<0.06	<0.06	<0.06	–	<0.06	<0.06	–	–	–	–
Silica (as SiO_2)	mg/L	18.4 18.7	–	18.0 18.0	17.2 17.0	19.0	–	18.7	18.6	19.5	–	18.3	18.2	19.2	–	19.3	18.6
Turbidity	NTU	0.2 0.1	–	0.2 0.2	0.1 0.2	0.2	–	0.4	0.3	0.1	–	0.2	0.2	NA[d]	–	0.1	0.4
pH	–	8.4	6.9	6.9	6.9	7.7	6.7	6.7	6.7	7.8	6.8	6.7	6.7	7.6	6.6	6.7	6.7
Temperature	ºC	18.5	19.1	18.5	18.8	18.1	19.0	19.0	19.0	19.6	20.4	20.4	20.5	18.7	19.3	19.5	19.4
DO	mg/L	5.7	5.1	5.6	5.2	5.5	6.0	5.6	5.5	5.3	5.9	5.5	5.8	5.8	5.2	5.3	5.1
ORP	mV	227	746	691	712	248	710	727	744	235	754	727	736	225	692	726	731
Free Chlorine	mg/L	–	0.5	0.5	0.5	–	0.4	0.4	0.4	–	0.4	0.4	0.4	–	0.5	0.5	0.5
Total Chlorine	mg/L	–	0.5	0.5	0.5	–	0.5	0.5	0.5	–	0.4	0.4	0.4	–	0.5	0.5	0.5
Total Hardness	mg/L[a]	–	–	–	–	–	–	–	–	181	–	167	170	–	–	–	–
Ca Hardness	mg/L[a]	–	–	–	–	–	–	–	–	105	–	95.9	97.3	–	–	–	–
Mg Hardness	mg/L[a]	–	–	–	–	–	–	–	–	76.5	–	71.3	73.0	–	–	–	–
As (total)	µg/L	36.5 36.5	–	3.1 3.1	0.3 0.2	37.3	–	4.0	0.3	39.2	–	4.3	0.1	38.5	–	9.4	0.2
As (soluble)	µg/L	–	–	–	–	–	–	–	–	40.4	–	4.3	<0.1	–	–	–	–
As (particulate)	µg/L	–	–	–	–	–	–	–	–	<0.1	–	<0.1	<0.1	–	–	–	–
As (III)	µg/L	–	–	–	–	–	–	–	–	0.4	–	0.4	0.3	–	–	–	–
As (V)	µg/L	–	–	–	–	–	–	–	–	40.0	–	3.9	<0.1	–	–	–	–
Fe (total)	µg/L	<25 <25	–	<25 <25	<25 <25	<25	–	<25	<25	<25	–	<25	<25	<25	–	<25	<25
Fe (soluble)	µg/L	–	–	–	–	–	–	–	–	<25	–	<25	<25	–	–	–	–
Mn (total)	µg/L	0.2 0.2	–	<0.1 <0.1	0.1 0.1	0.3	–	<0.1	<0.1	0.2	–	0.1	<0.1	<0.1	–	<0.1	<0.1
Mn (soluble)	µg/L	–	–	–	–	–	–	–	–	0.1	–	<0.1	<0.1	–	–	–	–
Al (total)	µg/L	<10 <10	–	<10 <10	<10 <10	<10	–	<10	<10	<10	–	<10	<10	<10	–	<10	<10
Al (soluble)	µg/L	–	–	–	–	–	–	–	–	<10	–	<10	<10	–	–	–	–

(a) As $CaCO_3$. (b) As P. (c) Data questionable. (d) Sampling error.
IN = inlet; TA = after tank A; TB = after tank B; AC = after prechlorination and pH adjustment (field parameters only).
NA = data not available.

Table B-1. Analytical Results from Long-Term Sampling, Valley Vista, AZ (Continued)

Sampling Date		01/12/05				01/19/05[c]				01/26/05[d]				02/02/05[e]			
Sampling Location / Parameter	Unit	IN	AC	TA	TB	IN	AC	TA	TB	IN	AC	TA	TB	IN	AC	TA	TB
Bed Volume	10^3	–	–	24.8	12.4	–	–	27.1	13.5	–	–	29.3	14.7	–	–	31.5	15.8
Alkalinity	mg/L[a]	172	–	120	120	168	–	163	155	156	–	161	174	176	–	158	162
Fluoride	mg/L	–	–	–	–	–	–	–	–	–	–	–	–	–	–	–	–
Sulfate	mg/L	–	–	–	–	–	–	–	–	–	–	–	–	–	–	–	–
Nitrate (as N)	mg/L	–	–	–	–	–	–	–	–	–	–	–	–	–	–	–	–
Orthophosphate	mg/L[b]	–	–	–	–	–	–	–	–	–	–	–	–	–	–	–	–
Silica (as SiO_2)	mg/L	19.0	–	18.5	18.5	18.2	–	14.4	12.3	17.4	–	16.6	15.5	17.8	–	18.0	17.8
Turbidity	NTU	0.2	–	<0.1	<0.1	<0.1	–	<0.1	<0.1	<0.1	–	<0.1	<0.1	<0.1	–	<0.1	<0.1
pH	–	7.9	6.8	6.7	6.7	7.7	7.6	7.3	7.3	7.7	7.5	7.5	7.5	7.8	7.3	7.3	7.3
Temperature	ºC	19.7	19.8	19.7	19.6	19.4	19.8	19.9	19.8	19.5	19.2	19.3	19.2	18.9	19.4	19.6	19.5
DO	mg/L	5.3	5.1	5.3	5.4	6.0	5.5	5.1	5.2	5.3	5.7	5.7	5.5	5.6	5.6	5.3	5.4
ORP	mV	225	680	719	740	250	629	682	708	313	648	693	703	235	701	727	737
Free Chlorine	mg/L	–	0.4	0.4	0.4	–	0.4	0.4	0.4	–	0.5	0.6	0.6	–	0.6	0.6	0.6
Total Chlorine	mg/L	–	0.5	0.5	0.5	–	0.5	0.5	0.4	–	0.6	0.6	0.6	–	0.6	0.6	0.6
Total Hardness	mg/L[a]	–	–	–	–	–	–	–	–	–	–	–	–	–	–	–	–
Ca Hardness	mg/L[a]	–	–	–	–	–	–	–	–	–	–	–	–	–	–	–	–
Mg Hardness	mg/L[a]	–	–	–	–	–	–	–	–	–	–	–	–	–	–	–	–
As (total)	µg/L	37.7	–	9.9	0.4	37.6	–	14.8	0.5	36.3	–	29.0	0.4	35.9	–	25.2	6.5
As (soluble)	µg/L	–	–	–	–	–	–	–	–	–	–	–	–	–	–	–	–
As (particulate)	µg/L	–	–	–	–	–	–	–	–	–	–	–	–	–	–	–	–
As (III)	µg/L	–	–	–	–	–	–	–	–	–	–	–	–	–	–	–	–
As (V)	µg/L	–	–	–	–	–	–	–	–	–	–	–	–	–	–	–	–
Fe (total)	µg/L	<25	–	<25	<25	<25	–	<25	<25	<25	–	<25	<25	<25	–	<25	<25
Fe (soluble)	µg/L	–	–	–	–	–	–	–	–	–	–	–	–	–	–	–	–
Mn (total)	µg/L	0.2	–	0.3	0.2	0.9	–	0.2	<0.1	0.1	–	<0.1	<0.1	0.1	–	<0.1	9.2
Mn (soluble)	µg/L	–	–	–	–	–	–	–	–	–	–	–	–	–	–	–	–
Al (total)	µg/L	<10	–	<10	16.0	<10	–	11.6	<10	<10	–	18.1	<10	<10	–	<10	<10
Al (soluble)	µg/L	–	–	–	–	–	–	–	–	–	–	–	–	–	–	–	–

(a) As $CaCO_3$. (b) As P. (c) In-line pH electrode calibrated on 01/18/05. On-site pH readings are now closer to in-line pH readings. (d) Sulfuric acid not dosed correctly.
(e) In-line pH electrode replaced on 02/01/05.
IN = inlet; TA = after tank A; TB = after tank B; AC = after prechlorination and pH adjustment (field parameters only).

Table B-1. Analytical Results from Long-Term Sampling, Valley Vista, AZ (Continued)

Sampling Date		02/09/05[c]				02/16/05				02/23/05[d]				03/02/05[e]			
Sampling Location / Parameter	Unit	IN	AC	TA	TB	IN	AC	TA	TB	IN	AC	TA	TB	IN	AC	TA	TB
Bed Volume	10^3	–	–	33.8	16.9	–	–	36.0	18.0	–	–	38.2	19.1	–	–	40.5	20.2
Alkalinity	mg/L[a]	174	–	143	129	171	–	135	126	171	–	140	153	169 165	–	139 139	135 134
Fluoride	mg/L	–	–	–	–	0.1	–	<0.1	<0.1	–	–	–	–	–	–	–	–
Sulfate	mg/L	–	–	–	–	9	–	60	60	–	–	–	–	–	–	–	–
Nitrate (as N)	mg/L	–	–	–	–	1.0	–	1.0	1.0	–	–	–	–	–	–	–	–
Orthophosphate	mg/L[b]	–	–	–	–	–	–	–	–	–	–	–	–	–	–	–	–
Silica (as SiO_2)	mg/L	19.0	–	20.0	21.0	20.8	–	21.0	21.2	19.4	–	19.1	19.1	19.7 19.4	–	19.4 19.4	19.3 18.8
Turbidity	NTU	<0.1	–	<0.1	<0.1	<0.1	–	<0.1	<0.1	<0.1	–	<0.1	<0.1	<0.1 <0.1	–	<0.1 0.1	<0.1 <0.1
pH	–	7.7	6.9	6.9	6.9	7.7	6.8	6.7	6.7	7.7	7.0	7.0	6.9	7.7	7.0	7.0	7.0
Temperature	°C	19.4	19.7	19.8	19.7	19.7	20.0	20.0	19.9	18.9	19.5	19.6	19.5	18.8	19.3	19.4	19.4
DO	mg/L	5.2	5.5	5.2	4.9	5.1	5.3	5.2	4.9	5.4	4.9	5.1	4.9	6.1	5.0	4.8	5.1
ORP	mV	252	708	747	758	249	751	776	781	252	655	723	744	230	680	724	738
Free Chlorine	mg/L	–	0.5	0.5	0.5	–	0.7	0.7	0.7	–	0.5	0.5	0.5	–	0.4	0.5	0.5
Total Chlorine	mg/L	–	0.6	0.6	0.5	–	0.7	0.7	0.7	–	0.5	0.6	0.6	–	0.5	0.5	0.5
Total Hardness	mg/L[a]	–	–	–	–	131	–	133	139	–	–	–	–	–	–	–	–
Ca Hardness	mg/L[a]	–	–	–	–	71.2	–	78.4	83.4	–	–	–	–	–	–	–	–
Mg Hardness	mg/L[a]	–	–	–	–	59.8	–	54.4	55.5	–	–	–	–	–	–	–	–
As (total)	µg/L	39.6	–	22.7	5.0	35.6	–	15.6	3.6	34.9	–	19.9	4.5	43.6 43.7	–	30.8 30.6	9.7 9.5
As (soluble)	µg/L	–	–	–	–	35.6	–	15.3	3.4	–	–	–	–	–	–	–	–
As (particulate)	µg/L	–	–	–	–	<0.1	–	0.3	0.2	–	–	–	–	–	–	–	–
As (III)	µg/L	–	–	–	–	0.3	–	0.4	0.3	–	–	–	–	–	–	–	–
As (V)	µg/L	–	–	–	–	35.3	–	14.9	3.1	–	–	–	–	–	–	–	–
Fe (total)	µg/L	<25	–	<25	<25	<25	–	<25	<25	<25	–	<25	<25	<25 <25	–	<25 <25	<25 <25
Fe (soluble)	µg/L	–	–	–	–	<25	–	<25	<25	–	–	–	–	–	–	–	–
Mn (total)	µg/L	2.6	–	<0.1	0.8	<0.1	–	<0.1	<0.1	0.1	–	<0.1	<0.1	0.5 0.4	–	0.6 <0.1	<0.1 <0.1
Mn (soluble)	µg/L	–	–	–	–	<0.1	–	<0.1	<0.1	–	–	–	–	–	–	–	–
Al (total)	µg/L	<10	–	<10	<10	<10	–	<10	<10	<10	–	<10	<10	<10 <10	–	<10 <10	<10 <10
Al (soluble)	µg/L	–	–	–	–	<10	–	<10	<10	–	–	–	–	–	–	–	–

(a) As $CaCO_3$. (b) As P. (c) In-line pH transmitter setpoint changed from 7.2 to 6.8 on 02/07/05. (d) In-line pH transmitter setpoint changed from 6.8 to 6.9 to conserve acid on 02/18/05 due to pump leak. (e) In-line pH transmitter setpoint readjusted to 6.8 after taking on-site water quality measurements on 03/02/05.
IN = inlet; TA = after tank A; TB = after tank B; AC = after prechlorination and pH adjustment (field parameters only).

Table B-1. Analytical Results from Long-Term Sampling, Valley Vista, AZ (Continued)

Sampling Date		03/09/05				03/16/05				03/23/05[c]				03/30/05			
Sampling Location / Parameter	Unit	IN	AC	TA	TB	IN	AC	TA	TB	IN	AC	TA	TB	IN	AC	TA	TB
Bed Volume	10^3	–	–	42.7	21.4	–	–	45.0	22.5	–	–	47.2	23.6	–	–	49.4	24.7
Alkalinity	mg/L[a]	178	–	143	143	156	–	143	143	168	–	155	155	176	–	132	132
Fluoride	mg/L	–	–	–	–	–	–	–	–	–	–	–	–	–	–	–	–
Sulfate	mg/L	–	–	–	–	–	–	–	–	–	–	–	–	–	–	–	–
Nitrate (as N)	mg/L	–	–	–	–	–	–	–	–	–	–	–	–	–	–	–	–
Orthophosphate	mg/L[b]	–	–	–	–	–	–	–	–	–	–	–	–	–	–	–	–
Silica (as SiO_2)	mg/L	20.7	–	20.1	20.1	19.6	–	19.3	19.2	19.4	–	19.0	19.4	19.2	–	19.4	19.7
Turbidity	NTU	0.4	–	<0.1	<0.1	<0.1	–	<0.1	<0.1	<0.1	–	<0.1	<0.1	<0.1	–	<0.1	<0.1
pH	–	7.7	7.0	7.0	6.9	7.8	6.8	6.9	6.9	7.9	7.0	7.1	7.1	7.7	6.8	6.8	6.8
Temperature	ºC	20.2	20.2	20.2	20.1	19.6	19.8	19.8	19.6	19.2	19.7	19.7	19.6	19.5	19.7	19.7	19.7
DO	mg/L	5.7	5.7	5.4	5.6	5.3	5.0	5.2	4.5	5.2	5.1	4.9	4.9	5.4	5.1	5.4	5.2
ORP	mV	225	656	707	727	222	703	751	746	228	670	722	743	237	719	762	775
Free Chlorine	mg/L	–	0.3	0.3	0.3	–	0.5	0.5	0.6	–	1.0	0.6	0.5	–	0.7	0.6	0.6
Total Chlorine	mg/L	–	0.4	0.3	0.3	–	0.6	0.5	0.6	–	0.5	0.6	0.6	–	0.4	0.6	0.6
Total Hardness	mg/L[a]	–	–	–	–	–	–	–	–	–	–	–	–	–	–	–	–
Ca Hardness	mg/L[a]	–	–	–	–	–	–	–	–	–	–	–	–	–	–	–	–
Mg Hardness	mg/L[a]	–	–	–	–	–	–	–	–	–	–	–	–	–	–	–	–
As (total)	µg/L	44.5	–	29.9	9.3	35.7	–	25.0	8.5	44.3	–	30.9	11.6	36.5	–	26.4	11.7
As (soluble)	µg/L	–	–	–	–	–	–	–	–	–	–	–	–	–	–	–	–
As (particulate)	µg/L	–	–	–	–	–	–	–	–	–	–	–	–	–	–	–	–
As (III)	µg/L	–	–	–	–	–	–	–	–	–	–	–	–	–	–	–	–
As (V)	µg/L	–	–	–	–	–	–	–	–	–	–	–	–	–	–	–	–
Fe (total)	µg/L	<25	–	<25	<25	<25	–	<25	<25	<25	–	<25	<25	<25	–	<25	<25
Fe (soluble)	µg/L	–	–	–	–	–	–	–	–	–	–	–	–	–	–	–	–
Mn (total)	µg/L	0.2	–	<0.1	<0.1	<0.1	–	<0.1	<0.1	0.8	–	0.5	9.6	0.2	–	<0.1	<0.1
Mn (soluble)	µg/L	–	–	–	–	–	–	–	–	–	–	–	–	–	–	–	–
Al (total)	µg/L	<10	–	<10	<10	<10	–	<10	<10	<10	–	<10	<10	<10	–	<10	<10
Al (soluble)	µg/L	–	–	–	–	–	–	–	–	–	–	–	–	–	–	–	–

(a) As $CaCO_3$. (b) As P. (c) In-line pH transmitter setpoint changed from 6.8 to 6.6 on 03/24/05 to compensate for dosage problems since calibration on 03/17/05.
IN = inlet; TA = after tank A; TB = after tank B; AC = after prechlorination and pH adjustment (field parameters only).

Table B-1. Analytical Results from Long-Term Sampling, Valley Vista, AZ (Continued)

Sampling Date		04/06/05				04/13/05				04/20/05				04/27/05			
Sampling Location / Parameter	Unit	IN	AC	TA	TB	IN	AC	TA	TB	IN	AC	TA	TB	IN	AC	TA	TB
Bed Volume	10^3	–	–	51.5	25.8	–	–	53.7	26.8	–	–	55.9	28.0	–	–	57.9	28.9
Alkalinity	mg/L[(a)]	169	–	143	143	178	–	156	143	178	–	155	147	176	–	154	154
Fluoride	mg/L	–	–	–	–	<0.1	–	<0.1	<0.1	–	–	–	–	–	–	–	–
Sulfate	mg/L	–	–	–	–	8.0	–	50	50	–	–	–	–	–	–	–	–
Nitrate (as N)	mg/L	–	–	–	–	0.8	–	0.7	0.8	–	–	–	–	–	–	–	–
Orthophosphate	mg/L[(b)]	–	–	–	–	–	–	–	–	–	–	–	–	–	–	–	–
Silica (as SiO_2)	mg/L	19.2	–	19.4	19.4	20.4	–	20.6	20.8	19.6	–	19.3	19.3	19.9	–	19.8	19.7
Turbidity	NTU	0.1	–	<0.1	<0.1	0.2	–	0.2	0.1	0.1	–	0.1	<0.1	<0.1	–	<0.1	<0.1
pH	–	7.8	6.8	6.9	6.9	7.6	6.8	6.8	6.7	7.7	6.9	6.9	6.9	7.6	7.0	7.0	7.0
Temperature	ºC	20.1	20.1	20.1	20.1	20.3	20.1	20.1	20.1	19.9	19.9	19.9	19.9	20.0	20.1	20.0	19.9
DO	mg/L	5.6	5.4	5.8	5.4	5.7	5.2	4.9	5.4	5.4	5.2	5.3	5.1	5.4	5.3	5.7	5.3
ORP	mV	260	684	745	758	247	738	760	768	228	680	731	741	231	66	711	728
Free Chlorine	mg/L	–	0.7	0.5	0.5	–	0.5	0.7	0.6	–	0.5	0.5	0.5	–	0.4	0.4	0.4
Total Chlorine	mg/L	–	0.5	0.5	0.5	–	0.6	0.7	0.6	–	0.6	0.6	0.6	–	0.5	0.4	0.4
Total Hardness	mg/L[(a)]	–	–	–	–	168	–	161	162	–	–	–	–	–	–	–	–
Ca Hardness	mg/L[(a)]	–	–	–	–	94.4	–	90.9	92.1	–	–	–	–	–	–	–	–
Mg Hardness	mg/L[(a)]	–	–	–	–	73.2	–	70.0	70.1	–	–	–	–	–	–	–	–
As (total)	µg/L	41.7	–	31.9	13.9	35.7	–	26.8	11.8	36.0	–	30.1	15.6	39.2	–	34.4	17.9
As (soluble)	µg/L	–	–	–	–	35.5	–	26.9	12.0	–	–	–	–	–	–	–	–
As (particulate)	µg/L	–	–	–	–	0.2	–	<0.1	<0.1	–	–	–	–	–	–	–	–
As (III)	µg/L	–	–	–	–	0.4	–	0.4	0.4	–	–	–	–	–	–	–	–
As (V)	µg/L	–	–	–	–	35.1	–	26.5	11.6	–	–	–	–	–	–	–	–
Fe (total)	µg/L	<25	–	<25	<25	41.0	–	42.5	37.7	<25	–	<25	<25	<25	–	<25	<25
Fe (soluble)	µg/L	–	–	–	–	<25	–	<25	<25	–	–	–	–	–	–	–	–
Mn (total)	µg/L	0.3	–	<0.1	<0.1	0.5	–	<0.1	0.2	0.3	–	0.3	0.3	0.5	–	0.2	0.4
Mn (soluble)	µg/L	–	–	–	–	0.1	–	<0.1	<0.1	–	–	–	–	–	–	–	–
Al (total)	µg/L	<10	–	<10	<10	10.7	–	<10	<10	<10	–	<10	<10	<10	–	41.9	<10
Al (soluble)	µg/L	–	–	–	–	<10	–	<10	<10	–	–	–	–	–	–	–	–

(a) As $CaCO_3$. (b) As P.
IN = inlet; TA = after tank A; TB = after tank B; AC = after prechlorination and pH adjustment (field parameters only).

Table B-1. Analytical Results from Long-Term Sampling, Valley Vista, AZ (Continued)

Sampling Date		05/04/05[c,d]				05/11/05				05/18/05				05/25/05[e]			
Sampling Location / Parameter	Unit	IN	AC	TA	TB	IN	AC	TA	TB	IN	AC	TA	TB	IN	AC	TA	TB
Bed Volume	10^3	–	–	NA	NA	–	–	NA	NA	–	–	NA	NA	–	–	NA	NA
Alkalinity	mg/L[a]	195	–	147	142	185	–	154	154	178	–	156	156	183 183	–	156 156	156 156
Fluoride	mg/L	–	–	–	–	–	–	–	–	–	–	–	–	–	–	–	–
Sulfate	mg/L	–	–	–	–	–	–	–	–	–	–	–	–	–	–	–	–
Nitrate (as N)	mg/L	–	–	–	–	–	–	–	–	–	–	–	–	–	–	–	–
Orthophosphate	mg/L[b]	–	–	–	–	–	–	–	–	–	–	–	–	–	–	–	–
Silica (as SiO_2)	mg/L	18.6	–	16.7	18.8	19.3	–	17.7	19.1	19.2	–	18.5	19.2	18.9 19.3	–	18.6 18.2	18.6 18.8
Turbidity	NTU	0.2	–	<0.1	<0.1	<0.1	–	<0.1	<0.1	<0.1	–	0.1	<0.1	0.3 0.3	–	0.4 0.5	0.6 0.2
pH	–	7.6	6.9	6.7	6.7	7.7	6.9	6.9	6.9	7.5	6.9	6.9	6.9	7.6	7.0	7.0	6.9
Temperature	ºC	20.4	21.3	20.3	20.2	19.9	19.9	19.9	19.9	20.4	20.2	20.3	20.1	20.6	20.3	20.2	20.4
DO	mg/L	5.5	5.3	5.6	5.5	5.5	5.2	5.3	5.5	5.8	5.1	5.6	5.4	5.7	5.1	5.6	5.6
ORP	mV	279	378	750	779	244	682	716	734	216	660	691	717	201	635	661	704
Free Chlorine	mg/L	–	0.2	0.6	0.7	–	0.5	0.4	0.4	–	0.4	0.3	0.3	–	0.3	0.3	0.3
Total Chlorine	mg/L	–	0.2	0.7	0.7	–	0.4	0.4	0.4	–	0.4	0.3	0.3	–	0.3	0.3	0.3
Total Hardness	mg/L[a]	–	–	–	–	–	–	–	–	–	–	–	–	–	–	–	–
Ca Hardness	mg/L[a]	–	–	–	–	–	–	–	–	–	–	–	–	–	–	–	–
Mg Hardness	mg/L[a]	–	–	–	–	–	–	–	–	–	–	–	–	–	–	–	–
As (total)	µg/L	41.3	–	29.0	21.4	32.9	–	<0.1	15.1	38.8	–	0.3	21.4	36.3 37.5	–	18.5 18.4	37.4 37.0
As (soluble)	µg/L	–	–	–	–	–	–	–	–	–	–	–	–	–	–	–	–
As (particulate)	µg/L	–	–	–	–	–	–	–	–	–	–	–	–	–	–	–	–
As (III)	µg/L	–	–	–	–	–	–	–	–	–	–	–	–	–	–	–	–
As (V)	µg/L	–	–	–	–	–	–	–	–	–	–	–	–	–	–	–	–
Fe (total)	µg/L	<25	–	<25	<25	31.0	–	<25	47.3	<25	–	<25	<25	<25 <25	–	<25 <25	<25 <25
Fe (soluble)	µg/L	–	–	–	–	–	–	–	–	–	–	–	–	–	–	–	–
Mn (total)	µg/L	<0.1	–	0.2	<0.1	<0.1	–	<0.1	<0.1	<0.1	–	<0.1	<0.1	0.1 0.1	–	<0.1 <0.1	0.2 0.1
Mn (soluble)	µg/L	–	–	–	–	–	–	–	–	–	–	–	–	–	–	–	–
Al (total)	µg/L	<10	–	<10	22.2	<10	–	<10	28.5	<10	–	<10	<10	<10 <10	–	<10 <10	<10 <10
Al (soluble)	µg/L	–	–	–	–	–	–	–	–	–	–	–	–	–	–	–	–

(a) As $CaCO_3$. (b) As P. (c) Media changeout of TA (lead tank) on 04/29/05 and tank positions switched. TA (now lag tank) rebedded with 16.7 ft^3 of virgin media and TB (lead tank) has 22 ft^3 of partially exhausted media. Bed volumes not presented due to unintentional tank position switching during media run. (d) Operator corrected incorrect flow pattern after sampling. (e) Samples TA and TB inadvertently collected from TB and AC, respectively.
IN = inlet; TA = after tank A; TB = after tank B; AC = after prechlorination and pH adjustment (field parameters only).

Table B-1. Analytical Results from Long-Term Sampling, Valley Vista, AZ (Continued)

Sampling Date		06/01/05[c]				06/08/05[c]				06/15/05[c,d]				06/29/05[e]			
Sampling Location / Parameter	Unit	IN	AC	TA	TB	IN	AC	TA	TB	IN	AC	TA	TB	IN	AC	TA	TB
Bed Volume	10^3	–	–	NA	NA	–	–	NA	NA	–	–	NA	NA	–	–	NA	NA
Alkalinity	mg/L[a]	178	–	147	156	180	–	110	136	180	–	176	154	158	–	132	132
Fluoride	mg/L	–	–	–	–	<0.1	–	<0.1	0.3	–	–	–	–	–	–	–	–
Sulfate	mg/L	–	–	–	–	11	–	56	50	–	–	–	–	–	–	–	–
Nitrate (as N)	mg/L	–	–	–	–	1.2	–	1.2	1.3	–	–	–	–	–	–	–	–
Orthophosphate	mg/L[b]	–	–	–	–	–	–	–	–	–	–	–	–	–	–	–	–
Silica (as SiO_2)	mg/L	18.9	–	18.8	19.0	20.3	–	20.6	19.8	19.4	–	18.5	19.0	19.2	–	19.6	19.1
Turbidity	NTU	<0.1	–	<0.1	<0.1	<0.1	–	<0.1	<0.1	0.2	–	<0.1	<0.1	0.7	–	<0.1[f]	0.7
pH	–	7.6	6.8	6.8	6.9	7.7	6.8	6.6	6.7	7.6	7.0	7.0	7.0	7.6	6.9	6.9	6.9
Temperature	ºC	20.4	20.3	20.2	20.1	20.4	20.2	20.2	20.2	20.7	20.5	20.2	20.2	20.5	20.3	20.5	20.6
DO	mg/L	5.6	5.1	5.2	5.4	5.7	5.8	5.5	5.4	5.7	5.5	5.6	5.3	6.2	6.1	5.8	5.6
ORP	mV	209	685	716	740	217	680	726	741	216	655	696	717	197	658	710	722
Free Chlorine	mg/L	–	0.3	0.3	0.4	–	0.4	0.4	0.4	–	0.3	0.3	0.4	–	0.4	0.4	0.4
Total Chlorine	mg/L	–	0.4	0.4	0.4	–	0.4	0.4	0.4	–	0.4	0.3	0.4	–	0.4	0.4	0.4
Total Hardness	mg/L[a]	–	–	–	–	193	–	186	165	–	–	–	–	–	–	–	–
Ca Hardness	mg/L[a]	–	–	–	–	112	–	106	93.2	–	–	–	–	–	–	–	–
Mg Hardness	mg/L[a]	–	–	–	–	81.3	–	80.7	71.8	–	–	–	–	–	–	–	–
As (total)	µg/L	35.2	–	11.8	36.6	37.3	–	11.0	37.9	44.0	–	13.2	43.8	38.0	–	10.5	15.2
As (soluble)	µg/L	–	–	–	–	36.6	–	11.3	39.2	–	–	–	–	–	–	–	–
As (particulate)	µg/L	–	–	–	–	0.8	–	<0.1	<0.1	–	–	–	–	–	–	–	–
As (III)	µg/L	–	–	–	–	0.4	–	0.4	0.7	–	–	–	–	–	–	–	–
As (V)	µg/L	–	–	–	–	36.1	–	10.8	38.5	–	–	–	–	–	–	–	–
Fe (total)	µg/L	<25	–	<25	<25	<25	–	<25	<25	<25	–	<25	<25	<25	–	<25	<25
Fe (soluble)	µg/L	–	–	–	–	<25	–	<25	<25	–	–	–	–	–	–	–	–
Mn (total)	µg/L	0.2	–	<0.1	0.2	0.2	–	<0.1	0.2	0.2	–	0.1	0.2	0.2	–	0.2	0.3
Mn (soluble)	µg/L	–	–	–	–	0.1	–	<0.1	0.2	–	–	–	–	–	–	–	–
Al (total)	µg/L	<10	–	<10	<10	<10	–	<10	<10	<10	–	<10	<10	<10	–	<10	18.8
Al (soluble)	µg/L	–	–	–	–	<10	–	<10	<10	–	–	–	–	–	–	–	–

(a) As $CaCO_3$. (b) As P. (c) Samples TA and TB inadvertently collected from TB and AC, respectively. (d) Kinetico observed incorrect tank positions on 06/10/05.
(e) Operator corrected tank positions on 06/22/05. (f) Reanalyzed outside of holding time.
IN = inlet; TA = after tank A; TB = after tank B; AC = after prechlorination and pH adjustment (field parameters only).

Table B-1. Analytical Results from Long-Term Sampling, Valley Vista, AZ (Continued)

Sampling Date		07/06/05				10/19/05[c]				10/26/05[d]				11/02/05			
Sampling Location / Parameter	Unit	IN	AC	TA	TB	IN	AC	TA	TB	IN	AC	TA	TB	IN	AC	TA	TB
Bed Volume	10^3	–	–	NA	NA	–	–	0.6	1.3	–	–	1.4	2.7	–	–	2.1	4.2
Alkalinity	mg/L[a]	154	–	132	132	176	–	176	185	176	–	167	163	194	–	176	176
Fluoride	mg/L	–	–	–	–	0.1	–	<0.1	<0.1	–	–	–	–	–	–	–	–
Sulfate	mg/L	–	–	–	–	11	–	14	12	–	–	–	–	–	–	–	–
Nitrate (as N)	mg/L	–	–	–	–	1.2	–	1.3	1.2	–	–	–	–	–	–	–	–
Orthophosphate	mg/L[b]	–	–	–	–	<0.05	–	<0.05	<0.05	<0.05	–	<0.05	<0.05	–	–	–	–
Phosphorus	µg/L[b]	–	–	–	–	11.6	–	<10	<10	–	–	–	–	12.9	–	<10	<10
Silica (as SiO_2)	mg/L	19.6	–	19.0	19.2	15.7	–	5.9	11.5	19	–	10.9	15.6	19.5	–	13.9	16.7
Turbidity	NTU	0.1	–	0.2	<0.1	0.1	–	0.3	0.7	<0.1	–	<0.1	<0.1	0.1	–	<0.1	<0.1
pH	–	7.6	7.0	6.8	6.9	7.7	7.7	7.4	7.5	7.7	7.7	7.5	7.5	7.7	7.7	7.6	7.6
Temperature	ºC	20.8	20.5	20.5	20.4	20.0	20.1	20.0	20.1	19.6	19.8	19.8	20.0	19.9	20.0	20.1	20.1
DO	mg/L	5.9	6.0	5.4	5.5	5.8	5.6	5.5	5.7	5.5	5.6	5.8	5.9	6.1	6.0	6.2	6.0
ORP	mV	183	680	717	733	191	619	652	673	233	635	538	649	226	622	663	680
Free Chlorine	mg/L	–	0.5	0.5	0.5	–	0.6	0.3	0.3	–	0.5	0.1	0.4	–	0.6	0.5	0.5
Total Chlorine	mg/L	–	0.5	0.6	0.6	–	0.6	0.3	0.4	–	0.5	0.1	0.4	–	0.6	0.5	0.5
Total Hardness	mg/L[a]	–	–	–	–	170	–	178	175	–	–	–	–	–	–	–	–
Ca Hardness	mg/L[a]	–	–	–	–	97.0	–	99.1	98.5	–	–	–	–	–	–	–	–
Mg Hardness	mg/L[a]	–	–	–	–	73.2	–	78.6	76.3	–	–	–	–	–	–	–	–
As (total)	µg/L	34.9	–	8.9	15.6	39.7	–	0.5	0.1	36.7	–	0.2	0.2	36.5	–	0.1	0.5
As (soluble)	µg/L	–	–	–	–	38.8	–	<0.1	<0.1	–	–	–	–	–	–	–	–
As (particulate)	µg/L	–	–	–	–	0.8	–	0.4	<0.1	–	–	–	–	–	–	–	–
As (III)	µg/L	–	–	–	–	1.0	–	0.3	0.3	–	–	–	–	–	–	–	–
As (V)	µg/L	–	–	–	–	37.8	–	<0.1	<0.1	–	–	–	–	–	–	–	–
Fe (total)	µg/L	<25	–	<25	<25	<25	–	<25	<25	<25	–	<25	<25	<25	–	<25	<25
Fe (soluble)	µg/L	–	–	–	–	<25	–	<25	<25	–	–	–	–	–	–	–	–
Mn (total)	µg/L	0.2	–	<0.1	<0.1	<0.1	–	<0.1	<0.1	0.1	–	<0.1	<0.1	0.1	–	<0.1	<0.1
Mn (soluble)	µg/L	–	–	–	–	<0.1	–	<0.1	<0.1	–	–	–	–	–	–	–	–
Al (total)	µg/L	<10	–	<10	<10	<10	–	<10	<10	<10	–	<10	10.2	<10	–	<10	<10
Al (soluble)	µg/L	–	–	–	–	<10	–	<10	<10	–	–	–	–	–	–	–	–

(a) As $CaCO_3$. (b) As P. (c) TA and TB rebed before 16 hr/day system operation resumed without pH adjustment on 10/12/05. Bed volume based on 22 ft^3 of media for TB (lead tank) and 44 ft^3 of media for TA (lag tank). (d) Chlorine pump leak repaired before taking samples and water quality measurements; chlorine residual had not made it to TA yet.
IN = inlet; TA = after tank A; TB = after tank B; AC = after prechlorination (field parameters only).

Table B-1. Analytical Results from Long-Term Sampling, Valley Vista, AZ (Continued)

Sampling Date		11/09/05				11/16/05				11/30/05				12/07/05			
Sampling Location / Parameter	Unit	IN	AC	TA	TB	IN	AC	TA	TB	IN	AC	TA	TB	IN	AC	TA	TB
Bed Volume	10^3	–	–	2.9	5.7	–	–	3.6	7.2	–	–	5.1	10.2	–	–	5.8	11.6
Alkalinity	mg/L[(a)]	176	–	180	176	176	–	176	176	154	–	176	176	176	–	180	176
Fluoride	mg/L	–	–	–	–	<0.1	–	<0.1	<0.1	–	–	–	–	–	–	–	–
Sulfate	mg/L	–	–	–	–	11	–	12	12	–	–	–	–	–	–	–	–
Nitrate (as N)	mg/L	–	–	–	–	1.2	–	1.2	1.2	–	–	–	–	–	–	–	–
Phosphorus	µg/L[(b)]	<10	–	<10	<10	<10	–	<10	<10	14.2	–	<10	<10	<10	–	<10	<10
Silica (as SiO_2)	mg/L	19.0	–	15.0	17.7	18.2	–	15.4	17.0	19.6	–	17.7	18.8	19.4	–	18.0	17.7
Turbidity	NTU	<0.1	–	<0.1	<0.1	<0.1	–	<0.1	<0.1	<0.1	–	<0.1	<0.1	<0.1	–	<0.1	<0.1
pH	–	7.7	7.7	7.6	7.6	7.6	7.6	7.6	7.6	7.7	7.6	7.6	7.6	7.8	7.8	7.8	7.8
Temperature	ºC	20.0	20.1	20.3	20.1	19.7	19.8	19.8	19.8	18.8	19.4	19.4	19.3	18.8	18.9	19.2	19.2
DO	mg/L	6.1	6.1	6.3	6.2	5.4	5.4	5.1	4.7	5.1	5.1	5.2	4.9	5.7	5.0	5.1	5.2
ORP	mV	228	657	675	712	271	659	670	694	283	599	634	661	282	595	637	699
Free Chlorine	mg/L	–	0.7	0.6	0.6	–	0.5	0.5	0.5	–	0.4	0.3	0.3	–	0.4	0.3	0.3
Total Chlorine	mg/L	–	0.7	0.6	0.6	–	0.5	0.5	0.5	–	0.4	0.3	0.3	–	0.4	0.3	0.3
Total Hardness	mg/L[(a)]	–	–	–	–	172	–	174	174	–	–	–	–	–	–	–	–
Ca Hardness	mg/L[(a)]	–	–	–	–	104	–	106	104	–	–	–	–	–	–	–	–
Mg Hardness	mg/L[(a)]	–	–	–	–	68.3	–	68.4	70.4	–	–	–	–	–	–	–	–
As (total)	µg/L	40.4	–	0.1	2.5	37.6	–	<0.1	9.7	39.9	–	0.6	14.7	44.0	–	0.8	18.2
As (soluble)	µg/L	–	–	–	–	37.0	–	<0.1	9.6	–	–	–	–	–	–	–	–
As (particulate)	µg/L	–	–	–	–	0.6	–	<0.1	<0.1	–	–	–	–	–	–	–	–
As (III)	µg/L	–	–	–	–	<0.1	–	<0.1	0.1	–	–	–	–	–	–	–	–
As (V)	µg/L	–	–	–	–	36.9	–	<0.1	9.5	–	–	–	–	–	–	–	–
Fe (total)	µg/L	<25	–	<25	<25	<25	–	<25	<25	<25	–	<25	<25	<25	–	<25	<25
Fe (soluble)	µg/L	–	–	–	–	<25	–	<25	<25	–	–	–	–	–	–	–	–
Mn (total)	µg/L	<0.1	–	<0.1	<0.1	0.4	–	<0.1	0.3	0.2	–	<0.1	<0.1	0.9	–	0.4	0.4
Mn (soluble)	µg/L	–	–	–	–	0.2	–	<0.1	0.5	–	–	–	–	–	–	–	–
Al (total)	µg/L	<10	–	<10	<10	<10	–	<10	<10	<10	–	<10	<10	<10	–	<10	<10
Al (soluble)	µg/L	–	–	–	–	<10	–	<10	<10	–	–	–	–	–	–	–	–

(a) As $CaCO_3$. (b) As P.
IN = inlet; TA = after tank A; TB = after tank B; AC = after prechlorination (field parameters only).

Table B-1. Analytical Results from Long-Term Sampling, Valley Vista, AZ (Continued)

Sampling Date		12/14/05				01/04/06				01/11/06				01/18/06			
Sampling Location / Parameter	Unit	IN	AC	TA	TB	IN	AC	TA	TB	IN	AC	TA	TB	IN	AC	TA	TB
Bed Volume	10^3	–	–	6.6	13.2	–	–	8.8	17.6	–	–	9.5	19.1	–	–	10.3	20.6
Alkalinity	mg/L[a]	180	–	176	176	180	–	168[c]	180	176	–	176	176	176	–	176	180
Fluoride	mg/L	<0.1	–	<0.1	<0.1	–	–	–	–	–	–	–	–	–	–	–	–
Sulfate	mg/L	11	–	11	11	–	–	–	–	–	–	–	–	–	–	–	–
Nitrate (as N)	mg/L	1.2	–	1.2	1.2	–	–	–	–	–	–	–	–	–	–	–	–
Phosphorus	µg/L[b]	45.2	–	19.5	30.4	10.3	–	<10	<10	<10	–	<10	<10	<10	–	<10	<10
Silica (as SiO_2)	mg/L	20.0	–	19.1	19.8	18.5	–	17.5	18.2	18.6	–	18.5	19.5	18.1	–	17.5	17.7
Turbidity	NTU	0.3	–	0.3	0.1	<0.1	–	0.3	0.1	0.2	–	0.1	0.3	0.1	–	0.1	0.3
pH	–	7.8	7.7	7.6	7.6	7.6	7.6	7.7	7.6	7.6	7.7	7.7	7.7	7.7	7.6	7.6	7.6
Temperature	ºC	19.3	19.5	19.5	19.5	19.6	19.8	19.7	19.7	18.7	18.9	18.3	19.2	18.8	19.3	19.4	19.6
DO	mg/L	5.4	4.7	5.4	5.0	5.2	5.4	4.8	5.8	5.3	5.4	5.6	5.4	5.4	5.3	5.2	5.0
ORP	mV	306	591	647	661	294	624	669	690	309	615	684	705	305	575	624	659
Free Chlorine	mg/L	–	0.4	0.3	0.3	–	0.7	0.6	0.6	–	0.3	0.3	0.4	–	0.3	0.3	0.3
Total Chlorine	mg/L	–	0.4	0.3	0.3	–	0.7	0.6	0.6	–	0.4	0.3	0.4	–	0.4	0.4	0.3
Total Hardness	mg/L[a]	192	–	197	200	–	–	–	–	–	–	–	–	–	–	–	–
Ca Hardness	mg/L[a]	91.4	–	92.5	92.9	–	–	–	–	–	–	–	–	–	–	–	–
Mg Hardness	mg/L[a]	100	–	105	107	–	–	–	–	–	–	–	–	–	–	–	–
As (total)	µg/L	44.9	–	2.2	23.4	36.8	–	5.5	24.3	36.8	–	8.2	25.1	36.6	–	9.6	26.3
As (soluble)	µg/L	44.5	–	2.9	23.7	–	–	–	–	–	–	–	–	–	–	–	–
As (particulate)	µg/L	0.4	–	<0.1	<0.1	–	–	–	–	–	–	–	–	–	–	–	–
As (III)	µg/L	1.7	–	1.5	1.6	–	–	–	–	–	–	–	–	–	–	–	–
As (V)	µg/L	42.8	–	1.4	22.1	–	–	–	–	–	–	–	–	–	–	–	–
Fe (total)	µg/L	<25	–	<25	<25	<25	–	<25	<25	<25	–	55.1	<25	<25	–	<25	<25
Fe (soluble)	µg/L	<25	–	<25	<25	–	–	–	–	–	–	–	–	–	–	–	–
Mn (total)	µg/L	0.3	–	0.2	0.2	<0.1	–	<0.1	<0.1	<0.1	–	4.0	0.4	0.1	–	0.2	<0.1
Mn (soluble)	µg/L	0.3	–	0.1	0.2	–	–	–	–	–	–	–	–	–	–	–	–
Al (total)	µg/L	<10	–	<10	<10	<10	–	<10	<10	<10	–	<10	15.7	<10	–	<10	<10
Al (soluble)	µg/L	<10	–	14.2	<10	–	–	–	–	–	–	–	–	–	–	–	–

(a) As $CaCO_3$. (b) As P. (c) Reanalyzed outside of hold time.
IN = inlet; TA = after tank A; TB = after tank B; AC = after prechlorination (field parameters only).

Table B-1. Analytical Results from Long-Term Sampling, Valley Vista, AZ (Continued)

Sampling Date		01/25/06				02/01/06				03/08/06[c]				03/21/06			
Sampling Location / Parameter	Unit	IN	AC	TA	TB	IN	AC	TA	TB	IN	AC	TA	TB	IN	AC	TA	TB
Bed Volume	10^3	–	–	11.0	22.0	–	–	11.8	23.6	–	–	0.6	0.3	–	–	4.9	2.4
Alkalinity	mg/L[a]	180	–	180	180	172	–	172	172	174		170	170	170 166	–	170 166	170 174
Fluoride	mg/L	–	–	–	–	<0.1	–	<0.1	<0.1	–	–	–	–	–	–	–	–
Sulfate	mg/L	–	–	–	–	11	–	11	11	–	–	–	–	–	–	–	–
Nitrate (as N)	mg/L	–	–	–	–	1.2	–	1.1	1.1	–	–	–	–	–	–	–	–
Phosphorus	µg/L[b]	<10	–	<10	<10	<10	–	<10	<10	<10	–	<10	<10	<10 <10	–	<10 <10	<10 <10
Silica (as SiO_2)	mg/L	18.6	–	18.0	18.6	19.6	–	19.2	19.1	17.6	–	8.4	1.4	18.2 18.8	–	17.6 17.3	15.4 15.8
Turbidity	NTU	0.1	–	0.1	0.6	0.1	–	0.2	0.2	0.3	–	23	0.2	0.2 0.2	–	0.5 0.5	0.3 0.4
pH	–	7.7	7.6	7.6	7.6	7.6	7.6	7.6	7.6	7.6	7.6	7.5	7.3	7.7	7.7	7.6	7.6
Temperature	ºC	18.7	19.2	19.3	18.9	20.1	20.1	20.1	20.1	18.8	19.2	19.2	19.3	19.2	19.6	19.4	19.5
DO	mg/L	5.1	5.1	5.3	5.0	5.8	5.4	5.4	5.5	5.3	5.3	4.9	5.1	5.3	4.9	5.1	5.2
ORP	mV	305	595	640	678	285	620	641	665	230	644	652	555	212	614	644	662
Free Chlorine	mg/L	–	0.3	0.3	0.3	–	0.4	0.4	0.4	–	0.9	0.4	0.0	–	0.4	0.4	0.4
Total Chlorine	mg/L	–	0.3	0.3	0.3	–	0.4	0.4	0.4	–	0.9	0.4	0.0	–	0.4	0.4	0.4
Total Hardness	mg/L[a]	–	–	–	–	166	–	168	172	–	–	–	–	–	–	–	–
Ca Hardness	mg/L[a]	–	–	–	–	97.0	–	97.8	98.4	–	–	–	–	–	–	–	–
Mg Hardness	mg/L[a]	–	–	–	–	68.8	–	70.4	73.1	–	–	–	–	–	–	–	–
As (total)	µg/L	47.2	–	14.2	36.4	40.0	–	14.3	31.0	38.6	–	0.5	0.2	37.4 36.5	–	0.3 0.3	<0.1 <0.1
As (soluble)	µg/L	–	–	–	–	40.8	–	14.1	30.4	–	–	–	–	–	–	–	–
As (particulate)	µg/L	–	–	–	–	<0.1	–	0.2	0.6	–	–	–	–	–	–	–	–
As (III)	µg/L	–	–	–	–	0.5	–	0.5	<0.1	–	–	–	–	–	–	–	–
As (V)	µg/L	–	–	–	–	40.3	–	13.6	30.3	–	–	–	–	–	–	–	–
Fe (total)	µg/L	<25	–	<25	<25	<25	–	<25	<25	<25	–	319	<25	<25 <25	–	<25 <25	<25 <25
Fe (soluble)	µg/L	–	–	–	–	<25	–	<25	<25	–	–	–	–	–	–	–	–
Mn (total)	µg/L	<0.1	–	<0.1	<0.1	<0.1	–	<0.1	<0.1	0.4	–	1.3	0.4	0.3 0.3	–	0.2 0.2	0.2 0.2
Mn (soluble)	µg/L	–	–	–	–	<0.1	–	<0.1	<0.1	–	–	–	–	–	–	–	–
Al (total)	µg/L	<10	–	<10	<10	<10	–	<10	<10	–	–	–	–	–	–	–	–
Al (soluble)	µg/L	–	–	–	–	<10	–	<10	<10	–	–	–	–	–	–	–	–

(a) As $CaCO_3$. (b) As P. (c) Vessels A and B rebed with ARM 200 media on 02/28/06. System operation resumed without pH adjustment and 24 hr/day run time on 03/07/06. Bed volume based on 22 ft^3 of media for TA (lead tank) and 44 ft^3 of media for TB (lag tank).
IN = inlet; TA = after tank A; TB = after tank B; AC = after prechlorination (field parameters only).

Table B-1. Analytical Results from Long-Term Sampling, Valley Vista, AZ (Continued)

Sampling Date		04/05/06				04/19/06				05/03/06				05/17/06			
Sampling Location / Parameter	Unit	IN	AC	TA	TB	IN	AC	TA	TB	IN	AC	TA	TB	IN	AC	TA	TB
Bed Volume	10^3	–	–	9.8	4.9	–	–	14.2	7.1	–	–	18.8	9.4	–	–	23.4	11.7
Alkalinity	mg/L[a]	170	–	165	170	176	–	185	181	172	–	168	168	167	–	163	167
Fluoride	mg/L	–	–	–	–	–	–	–	–	–	–	–	–	–	–	–	–
Sulfate	mg/L	–	–	–	–	–	–	–	–	–	–	–	–	–	–	–	–
Nitrate (as N)	mg/L	–	–	–	–	–	–	–	–	–	–	–	–	–	–	–	–
Phosphorus	µg/L[b]	<10	–	<10	<10	18.5	–	<10	<10	<10	–	<10	<10	<10	–	<10	<10
Silica (as SiO_2)	mg/L	19.0	–	18.0	18.0	18.5	–	18.1	18.3	19.2	–	19.0	19.4	19.9	–	19.6	19.0
Turbidity	NTU	0.4	–	0.3	0.3	0.2	–	0.4	0.1	0.2	–	0.3	0.2	0.2	–	0.3	0.4
pH	–	7.7	7.7	7.7	7.7	7.7	7.7	7.7	7.7	7.6	7.6	7.6	7.6	NA[c]	NA[c]	NA[c]	NA[c]
Temperature	ºC	18.9	19.3	19.1	19.1	19.5	19.8	19.9	19.8	20.0	20.1	20.1	20.2	NA[c]	NA[c]	NA[c]	NA[c]
DO	mg/L	5.7	5.1	5.0	5.1	5.2	5.5	5.4	5.7	5.9	5.7	5.5	5.6	NA[c]	NA[c]	NA[c]	NA[c]
ORP	mV	211	593	636	654	202	648	681	693	151	569	623	636	NA[c]	NA[c]	NA[c]	NA[c]
Free Chlorine	mg/L	–	0.5	0.4	0.4	–	0.6	0.6	0.6	–	0.3	0.3	0.3	–	NA[c]	NA[c]	NA[c]
Total Chlorine	mg/L	–	0.5	0.4	0.4	–	0.6	0.6	0.6	–	0.3	0.3	0.3	–	NA[c]	NA[c]	NA[c]
Total Hardness	mg/L[a]	–	–	–	–	–	–	–	–	–	–	–	–	–	–	–	–
Ca Hardness	mg/L[a]	–	–	–	–	–	–	–	–	–	–	–	–	–	–	–	–
Mg Hardness	mg/L[a]	–	–	–	–	–	–	–	–	–	–	–	–	–	–	–	–
As (total)	µg/L	40.8	–	2.5	0.1	39.1	–	5.3	0.1	38.3	–	8.9	0.2	38.4	–	12.6	0.4
As (soluble)	µg/L	–	–	–	–	–	–	–	–	–	–	–	–	–	–	–	–
As (particulate)	µg/L	–	–	–	–	–	–	–	–	–	–	–	–	–	–	–	–
As (III)	µg/L	–	–	–	–	–	–	–	–	–	–	–	–	–	–	–	–
As (V)	µg/L	–	–	–	–	–	–	–	–	–	–	–	–	–	–	–	–
Fe (total)	µg/L	<25	–	<25	<25	<25	–	<25	<25	<25	–	<25	<25	<25	–	<25	<25
Fe (soluble)	µg/L	–	–	–	–	–	–	–	–	–	–	–	–	–	–	–	–
Mn (total)	µg/L	0.1	–	<0.1	<0.1	0.2	–	0.1	0.1	<0.1	–	<0.1	<0.1	<0.1	–	<0.1	<0.1
Mn (soluble)	µg/L	–	–	–	–	–	–	–	–	–	–	–	–	–	–	–	–

(a) As $CaCO_3$. (b) As P. (c) On-site water quality parameter not measured due to reduced regime.
IN = inlet; TA = after tank A; TB = after tank B; AC = after prechlorination (field parameters only).

Table B-1. Analytical Results from Long-Term Sampling, Valley Vista, AZ (Continued)

Sampling Date		05/31/06				06/14/06				06/28/06				07/12/06			
Sampling Location / Parameter	Unit	IN	AC	TA	TB	IN	AC	TA	TB	IN	AC	TA	TB	IN	AC	TA	TB
Bed Volume	10^3	–	–	28.0	14.0	–	–	32.5	16.3	–	–	37.1	18.5	–	–	41.6	20.8
Alkalinity	mg/L[a]	167	–	167	171	167	–	167	167	172	–	168	172	168	–	168	168
Fluoride	mg/L	–	–	–	–	–	–	–	–	–	–	–	–	–	–	–	–
Sulfate	mg/L	–	–	–	–	–	–	–	–	–	–	–	–	–	–	–	–
Nitrate (as N)	mg/L	–	–	–	–	–	–	–	–	–	–	–	–	–	–	–	–
Phosphorus	µg/L[b]	30.6	–	23.6	19.3	<10	–	<10	<10	19.1	–	<10	<10	20.4	–	17.5	<10
Silica (as SiO_2)	mg/L	18.1	–	17.6	18.5	20.9	–	19.7	20.5	21.2	–	21.2	20.3	18.5	–	17.6	18.3
Turbidity	NTU	0.3	–	0.2	0.2	0.2	–	0.2	0.2	0.3	–	0.2	0.1	0.4	–	0.4	0.1
pH	–	7.7	7.7	7.7	7.7	NA[c]	NA[c]	NA[c]	NA[c]	7.7	7.7	7.6	7.7	NA[c]	NA[c]	NA[c]	NA[c]
Temperature	ºC	20.6	20.3	20.2	20.0	NA[c]	NA[c]	NA[c]	NA[c]	20.6	20.4	20.4	20.1	NA[c]	NA[c]	NA[c]	NA[c]
DO	mg/L	NA[c]	NA[c]	NA[c]	NA[c]	NA[c]	NA[c]	NA[c]	NA[c]	NA[c]	NA[c]	NA[c]	NA[c]	NA[c]	NA[c]	NA[c]	NA[c]
ORP	mV	NA[c]	NA[c]	NA[c]	NA[c]	NA[c]	NA[c]	NA[c]	NA[c]	NA[c]	NA[c]	NA[c]	NA[c]	NA[c]	NA[c]	NA[c]	NA[c]
Free Chlorine	mg/L	–	0.4	0.4	0.4	–	NA[c]	NA[c]	NA[c]	–	0.5	0.5	0.5	–	NA[c]	NA[c]	NA[c]
Total Chlorine	mg/L	–	0.4	0.4	0.4	–	NA[c]	NA[c]	NA[c]	–	0.5	0.5	0.5	–	NA[c]	NA[c]	NA[c]
Total Hardness	mg/L[a]	–	–	–	–	–	–	–	–	–	–	–	–	–	–	–	–
Ca Hardness	mg/L[a]	–	–	–	–	–	–	–	–	–	–	–	–	–	–	–	–
Mg Hardness	mg/L[a]	–	–	–	–	–	–	–	–	–	–	–	–	–	–	–	–
As (total)	µg/L	33.9	–	13.1	0.8	49.8	–	22.0	2.3	36.2	–	19.3	2.9	36.5	–	22.6	4.4
As (soluble)	µg/L	–	–	–	–	–	–	–	–	–	–	–	–	–	–	–	–
As (particulate)	µg/L	–	–	–	–	–	–	–	–	–	–	–	–	–	–	–	–
As (III)	µg/L	–	–	–	–	–	–	–	–	–	–	–	–	–	–	–	–
As (V)	µg/L	–	–	–	–	–	–	–	–	–	–	–	–	–	–	–	–
Fe (total)	µg/L	<25	–	<25	<25	<25	–	<25	<25	<25	–	<25	<25	<25	–	<25	<25
Fe (soluble)	µg/L	–	–	–	–	–	–	–	–	–	–	–	–	–	–	–	–
Mn (total)	µg/L	0.1	–	<0.1	<0.1	0.2	–	<0.1	<0.1	0.1	–	0.1	<0.1	0.7	–	0.6	0.5
Mn (soluble)	µg/L	–	–	–	–	–	–	–	–	–	–	–	–	–	–	–	–

(a) As $CaCO_3$. (b) As P. (c) On-site water quality parameter not measured due to reduced regime.
IN = inlet; TA = after tank A; TB = after tank B; AC = after prechlorination (field parameters only).

Table B-1. Analytical Results from Long-Term Sampling, Valley Vista, AZ (Continued)

Sampling Date		07/26/06				08/09/06				08/23/06				09/06/06[e]			
Sampling Location / Parameter	Unit	IN	AC	TA	TB	IN	AC	TA	TB	IN	AC	TA	TB	IN	AC	TA	TB
Bed Volume	10^3	–	–	46.2	23.1	–	–	50.7	25.4	–	–	55.3	27.7	–	–	59.9	29.9
Alkalinity	mg/L[a]	167	–	167	167	168	–	164	168	184	–	178	176	181	–	184	181
Fluoride	mg/L	–	–	–	–	–	–	–	–	–	–	–	–	–	–	–	–
Sulfate	mg/L	–	–	–	–	–	–	–	–	–	–	–	–	–	–	–	–
Nitrate (as N)	mg/L	–	–	–	–	–	–	–	–	–	–	–	–	–	–	–	–
Phosphorus	µg/L[b]	<10	–	<10	<10	<10	–	<10	<10	<10	–	<10	<10	<10	–	<10	<10
Silica (as SiO_2)	mg/L	18.8	–	18.3	18.3	18.2	–	18.1	18.4	18.9	–	18.8	18.9	18.1	–	17.6	17.9
Turbidity	NTU	0.3	–	0.1	0.2	0.2	–	0.3	0.2	<0.1	–	<0.1	0.1	<0.1	–	0.2	0.2
pH	–	7.7	7.7	7.6	7.6	NA[c]	NA[c]	NA[c]	NA[c]	7.7	7.7	7.7	7.6	NA[c]	NA[c]	NA[c]	NA[c]
Temperature	ºC	20.9	20.1	20.1	20.0	NA[c]	NA[c]	NA[c]	NA[c]	22.0	20.7	20.5	20.3	NA[c]	NA[c]	NA[c]	NA[c]
DO	mg/L	NA[c]	NA[c]	NA[c]	NA[c]	NA[c]	NA[c]	NA[c]	NA[c]	NA[c]	NA[c]	NA[c]	NA[c]	NA[c]	NA[c]	NA[c]	NA[c]
ORP	mV	NA[c]	NA[c]	NA[c]	NA[c]	NA[c]	NA[c]	NA[c]	NA[c]	NA[c]	NA[c]	NA[c]	NA[c]	NA[c]	NA[c]	NA[c]	NA[c]
Free Chlorine	mg/L	–	0.3	0.3	0.3	–	NA[c]	NA[c]	NA[c]	–	<0.02[d]	<0.02[d]	<0.02[d]	–	NA[c]	NA[c]	NA[c]
Total Chlorine	mg/L	–	0.3	0.3	0.3	–	NA[c]	NA[c]	NA[c]	–	<0.1[d]	<0.1[d]	<0.1[d]	–	NA[c]	NA[c]	NA[c]
Total Hardness	mg/L[a]	–	–	–	–	–	–	–	–	–	–	–	–	–	–	–	–
Ca Hardness	mg/L[a]	–	–	–	–	–	–	–	–	–	–	–	–	–	–	–	–
Mg Hardness	mg/L[a]	–	–	–	–	–	–	–	–	–	–	–	–	–	–	–	–
As (total)	µg/L	47.1	–	29.5	8.0	43.3	–	28.0	9.5	46.8	–	32.4	12.8	39.4	–	29.1	12.6
As (soluble)	µg/L	–	–	–	–	–	–	–	–	–	–	–	–	–	–	–	–
As (particulate)	µg/L	–	–	–	–	–	–	–	–	–	–	–	–	–	–	–	–
As (III)	µg/L	–	–	–	–	–	–	–	–	–	–	–	–	–	–	–	–
As (V)	µg/L	–	–	–	–	–	–	–	–	–	–	–	–	–	–	–	–
Fe (total)	µg/L	<25	–	<25	<25	<25	–	<25	<25	<25	–	<25	<25	<25	–	<25	<25
Fe (soluble)	µg/L	–	–	–	–	–	–	–	–	–	–	–	–	–	–	–	–
Mn (total)	µg/L	0.2	–	<0.1	0.1	<0.1	–	<0.1	<0.1	<0.1	–	<0.1	<0.1	<0.1	–	<0.1	<0.1
Mn (soluble)	µg/L	–	–	–	–	–	–	–	–	–	–	–	–	–	–	–	–

(a) As $CaCO_3$. (b) As P. (c) On-site water quality parameter not measured due to reduced regime. (d) Leak found in chlorine injection system. (e) Power to well and system turned off on 09/19/06.
IN = inlet; TA = after tank A; TB = after tank B; AC = after prechlorination (field parameters only).

APPENDIX C

SPENT MEDIA RESULTS

Analyte	Mg	Al	Si	P	Ca	Fe	Mn	Ni	Cu	Zn	As	Cd	Pb
Unit	µg/g	µg/g	µg/g	µg/g	µg/g	µg/g	µg/g	µg/g	µg/g	µg/g	µg/g	µg/g	µg/g
10/25/04 Spent AAFS50 Media Results													
Tank A-Top	340	111,074	36.4	563	1,670	16,045	95.8	1.2	4.2	143	638	<0.25	1.1
Tank A-Middle	276	86,416	40.7	498	1,631	14,901	86.2	1.1	4.1	146	531	<0.25	0.8
Tank A-Bottom	265	100,671	32.3	411	1,618	15,079	77.0	1.1	3.2	121	528	<0.25	0.6
Tank B-Top	251	90,489	29.9	283	1,591	14,301	120	1.2	1.7	81.9	410	<0.25	0.5
Tank B-Middle	266	109,959	35.9	249	1,615	15,423	116	1.3	1.5	67.2	396	<0.25	0.4
Tank B-Bottom	261	123,758	32.5	175	1,672	17,477	124	1.4	1.1	52.1	349	<0.25	0.5
04/29/05 Spent AAFS50 Media Results													
Tank A-Top	297	441,258	248	1,010	1,907	17,826	160	1.3	7.0	159	1,619	<0.5	1.2
Tank A-Middle	281	447,149	313	967	1,913	17,087	146	1.2	5.7	151	1,576	<0.5	1.0
Tank A-Bottom	290	441,798	222	675	1,912	16,447	118	1.4	4.1	117	1,270	<0.5	1.2
02/28/06 Spent AAFS50 Media Results													
Tank A-Top	895	323,163	580	<50	3,381	15,534	171	2.5	2.0	<50	566	<0.5	<0.5
Tank A-Middle	850	313,892	169	<50	3,288	15,327	170	2.1	1.4	<50	458	<0.5	<0.5
Tank A-Bottom	799	345,100	323	<50	3,166	16,431	144	2.2	0.9	<50	264	<0.5	<0.5
Tank B-Top	926	322,771	403	67.7	3,559	15,584	188	1.8	9.4	154	896	<0.5	0.8
Tank B-Middle	914	323,123	374	60.6	3,466	14,078	174	1.8	6.4	102	829	<0.5	<0.5
Tank B-Bottom	911	339,546	453	<50	3,472	15,613	160	1.8	2.8	<50	625	<0.5	<0.5
10/19/06 Spent ARM 200 Media Results													
Tank A-Top	1,127	517	252	1,037	8,523	611,212	2,177	85.3	85.7	536	2,180	1.1	5.6
Tank A-Middle	1,140	450	385	1,024	8,307	587,715	2,258	96.8	68.6	406	2,268	0.6	4.6
Tank A-Bottom	1,099	431	443	874	7,659	594,408	2,353	96.3	46.7	121	1,823	<0.1	3.9
Tank B-Top	1,053	346	514	872	7,159	594,040	2,504	133	79.1	208	1,672	<0.1	6.8
Tank B-Middle	1,007	352	403	805	6,777	591,848	2,684	141	78.4	217	1,439	<0.1	7.0
Tank B-Bottom	899	297	394	609	6,071	595,998	2,638	139	74.8	203	788	<0.1	7.2

Note: Average compositions calculated from triplicate analyses with one-half of detection limit used for nondetect results.