United States Environmental Protection Agency

Emerging Technologies

for Wastewater Treatment and In-Plant Wet Weather Management

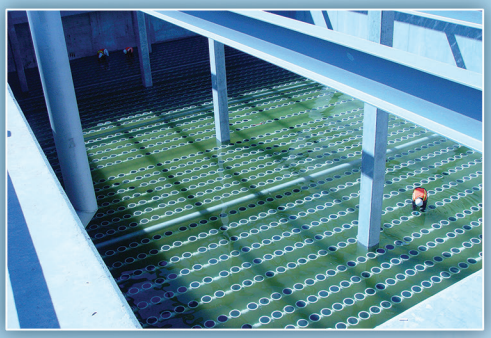

EPA 832-R-12-011 • March 2013

Emerging Technologies

for Wastewater Treatment and In-Plant Wet Weather Management

Prepared for:

Office of Wastewater Management
U.S. Environmental Protection Agency
Washington, D.C.

EPA 832-R-12-011

Under Contract

EP-C-11-009

Prepared by:

Tetra Tech, Inc.
Fairfax, Virginia

United States Environmental Protection Agency

March 2013

Emerging Technologies for Wastewater Treatment and In-Plant Wet Weather Management

EPA 832-R-12-011
March 2013

Produced under U.S. EPA Contract No. EP-C-11-009
U.S. EPA Project Manager / Leader: Jacqueline Rose, Office of Wastewater Management

Prepared by the Tetra Tech Corporation, Fairfax, Virginia
Tetra Tech Project Managers: Greg Mallon and Sean Scuras

Guidance was contributed by the following panel of EPA, academia, and industry experts:

Bob Bastian, Richard Field, Lauren Fillmore, April Gu, David Kinnear, Nancy Love, Jim McQuarrie, Dan Murray, Sudhir Murthy, Amit Pramanick, Eliot Sherman, David Stensel, Rao Surampalli, Anthony Tafuri, Cindy Wallis-Lage, James Wheeler, and Phil Zahreddine.

Technical Review was provided by professionals with experience in wastewater treatment. Technical reviewers of this document were:

Charles Bott, Chief of Special Projects, Hampton Roads Sanitation District, Virginia Beach, Virginia

Glen Daigger, Chief Wastewater Process Engineer, CH2MHill, Englewood, Colorado

Tyler Richards, Deputy Director of Engineering and Technical Services, Gwinnnett County Water Resources, Gwinnett County, Georgia

Electronic copies of this report can be downloaded from the
U.S. EPA Office of Wastewater Management web site at:
http://water.epa.gov/scitech/wastetech/publications.cfm

Cover photos, top to bottom:

Butler Drive Water Reclamation Facility, Peoria, AZ (Arizona Water Infrastructure Finance Authority)

Orange County Water District, Groundwater Replenishment, CA (Tetra Tech)

Ypsilanti Community Utilities Authority Biosolids Incineration System, MI (Tetra Tech)

Richardson Treatment Plant, sampling influent water, Loma Linda, CA (Tetra Tech)

Background photo: James E. Anderson Reverse Osmosis Water Treatment Plant, Port St. Lucie, FL (Tetra Tech)

Preface

The U.S. Environmental Protection Agency (U.S. EPA) is charged by Congress with protecting the nation's land, air, and water resources. Under a mandate of environmental laws, the Agency strives to formulate and implement actions leading to a balance between human activities and the ability of natural systems to support and sustain life. To meet this mandate, the Office of Wastewater Management (OWM) provides information and technical support to solve environmental problems today and to build a knowledge base necessary to protect public health and the environment in the future.

This publication has been produced, under contract to the U.S. EPA, by the Tetra Tech Corporation, and it provides current state of development as of the publication date. It is expected that this document will be revised periodically to reflect advances in this rapidly evolving area. The original publication was published in February 2008 with document number EPA 832-R-06-006. This publication is the first update and has a new document number, EPA 832-R-12-011, March 2013. Except as noted, information, interviews, and data development were conducted by the contractor. Some of the information, especially related to emerging technologies, was provided by the manufacturer or vendor of the equipment or technology, and could not be verified or supported by full scale case studies. In some cases, cost data were based on estimated savings without actual field data. When evaluating technologies, estimated costs, and stated performance, efforts should be made to collect current and up to date information.

The mention of trade names, specific vendors, or products does not represent an actual or presumed endorsement, preference, or acceptance by the U.S. EPA or Federal Government. Stated results, conclusions, usage, or practices do not necessarily represent the views or policies of the U.S. EPA.

This page intentionally blank

Contents

Preface iii

List of Tables vii

List of Figures vii

List of Technologies viii

Overview O-1

Chapter 1. Introduction and Approach

1.1 Introduction 1-1

1.2 Approach 1-2

1.2.1 Information Collection and New Process Identification 1-2

1.2.2 Initial Screened Technologies 1-3

1.2.3 Development of Technology Summary Sheets 1-5

1.2.4 Evaluation of Technologies 1-21

1.3 Reference Document Format and Use 1-22

1.4 Chapter References 1-23

Chapter 2. Physical/Chemical Treatment Processes

2.1 Introduction 2-1

2.2 Technology Assessment 2-1

Chapter 3. Biological Treatment Processes

3.1 Introduction 3-1

3.2 Technology Assessment 3-1

Chapter 4. In-Plant Wet Weather Flows Management Processes

4.1 Introduction 4-1

4.2 Technology Assessment 4-1

Chapter 5. Process Monitoring Technologies

5.1 Introduction 5-1

5.2 Technology Assessment 5-1

Chapter 6. Energy Conservation Measures

6.1 Introduction 6-1

6.2 Technology Assessment 6-1

6.3 Chapter References 6-21

Chapter 7. Research Needs

7.1 Introduction 7-1

7.2 Research Needs 7-1

7.2.1 Upgrading WWTPs 7-1

7.2.2 Removal of Nutrients 7-2

7.2.3 Removal of Other Contaminants 7-3

7.2.4 Security of Water Systems 7-3

7.2.5 Energy Conservation and Renewable Energy Sources 7-3

7.2.6 Wastewater and Solids Treatment Optimization 7-4

7.3 Chapter References 7-4

Appendix A. Trade Associations A-1

Appendix B. List of Acronyms and Abbreviations B-1

List of Tables

Table 1.1—Summary of Treatment Technologies Chapter 2 – Physical/Chemical Treatment Processes 1-6
Table 1.2—Summary of Treatment Technologies Chapter 3 – Biological Treatment Processes 1-10
Table 1.3—Summary of Treatment Technologies Chapter 4 – In-Plant Wet Weather Flows Management Processes 1-16
Table 1.4—Summary of Treatment Technologies Chapter 5 – Process Monitoring Technologies 1-17
Table 1.5—Summary of Treatment Technologies Chapter 6 – Energy Conservation Measures 1-19
Table 1.6—Descriptive Evaluation Criteria 1-21
Table 2.1—Physical/Chemical Treatment Processes – State of Development 2-2
Table 3.1—Biological Treatment Processes – State of Development 3-2
Table 4.1—In-Plant Wet Weather Flows Management Processes – State of Development 4-2
Table 5.1—Process Monitoring Technologies – State of Development 5-2
Table 6.1—Energy Conservation Measures – State of Development 6-3

List of Figures

Figure 1.1—Flow Schematic for Document Development 1-2
Figure 2.1—Evaluation of Innovative Physical/Chemical Treatment Technologies 2-5
Figure 3.1—Evaluation of Innovative Biological Treatment Technologies 3-6
Figure 4.1—Evaluation of Innovative In-Plant Wet Weather Flows Management Technologies 4-3
Figure 5.1—Evaluation of Innovative Process Monitoring Technologies 5-3

List of Technologies

Process	Type	Page
Blue PRO™ Reactive Media Filtration	Innovative	2-6
Phosphorus Recovery (Struvite or Calcium Phosphate Precipitation)	Innovative	2-8
Compressible Media Filtration (CMF)	Innovative	2-10
Magnetite Ballasted Sedimentation	Innovative	2-14
Multi-stage Filtration	Innovative	2-16
Nanofiltration (NF) and Reverse Osmosis (RO)	Innovative	2-18
Microwave Ultraviolet (UV) Disinfection	Adaptive Use	2-20
Actiflo® Process	Adaptive Use	2-22
DensaDeg® Process	Adaptive Use	2-24
Alternative Disinfectants [Peracetic Acid (PAA) and BCDMH]	Emerging	2-26
Ammonia Recovery	Emerging	2-29
Blue CAT™	Emerging	2-31
Salsnes Filter	Emerging	2-33
Bioaugmentation	Innovative	3-7
Deammonification (Sidestream and Mainstream Deammonification and Mainstream Nitrite Shunt)	Innovative (Sidestream Deammonification) and Emerging/Research (Mainstream Deammonification and Mainstream Nitrite Shunt	3-16
Nitritation and Denitritation (Sidestream)	Innovative	3-19
Deep Shaft Activated Sludge/VERTREAT™	Innovative	3-22
Cyclic Metabolic Environment	Innovative	3-23
Magnetite Ballasted Activated Sludge	Innovative	3-25
Biological-Chemical Phosphorus and Nitrogen Removal (BCFS) Process	Adaptive Use	3-27
Modified University of Cape Town (MUCT) Process	Adaptive Use	3-29
Westbank Process	Adaptive Use	3-30
Modified Anaerobic/Oxic (A/O) Process	Adaptive Use	3-31
Membrane Biofilm Reactor (MBfR)	Emerging	3-32
Vacuum Rotation Membrane (VRM®) System	Emerging	3-34
OpenCel Focused Pulse	Emerging	3-35
Integrated Fixed-film Activated Sludge (IFAS) Systems with Biological Phosphorus Removal	Emerging	3-36
Multi-Stage Activated Biological Process (MSABP™)	Emerging	3-37
Aerobic Granular Sludge Process (AGSP)	Emerging	3-38
Anaerobic Migrating Blanket Reactor (AMBR)	Research	3-41

Process	Type	Page
Anaerobic Membrane BioReactor (An-MBR)	Research	3-43
Microbial Fuel Cell (MFC)	Research	3-45
Compressible Media Filtration (CMF)	Innovative	4-4
Continuous Deflection Separator (CDS)	Innovative	4-8
TRASHMASTER™ Net Capture System	Innovative	4-10
Treatment Shaft	Innovative	4-11
HYDROSELF® Flip Gate Flusher	Innovative	4-13
Tipping Flusher®	Innovative	4-15
Alternative Disinfectants (PAA and BCDMH)	Emerging	4-16
BioActiflo® Process	Adaptive Use	4-19
Fluorescence In Situ Hybridization (FISH) for Filamentous and Nitrifying Bacteria	Innovative	5-4
Microtox®/Online Microtox®	Innovative	5-5
Nicotinamide Adenine Dinucleotide (NADH) Probes	Innovative	5-6
Online Respirometry	Innovative	5-7
Microwave Density Analyzer	Innovative	5-8
Nutrient Analyzers, Probes, and Electrodes	Innovative	5-9
Biological Micro-Electro-Mechanical Systems (BioMEMS)	Emerging	5-12
Fluorescence In Situ Hybridization (FISH) for Phosphorus Accumulating Organisms (PAOs)	Emerging	5-13
Handheld Advanced Nucleic Acid Analyzer (HANAA)	Emerging	5-14
Immunosensors and Immunoassays	Emerging	5-15
Photo-electro Chemical Oxygen Demand (PeCOD™)	Emerging	5-16
Automated SRT/DO Control	Innovative	6-4
Dual Impeller Aerator (mechanical mixing)	Innovative	6-5
Integrated Air Flow Control	Innovative	6-6
Single-stage Centrifugal Blowers with Inlet Guide Vanes and Variable Diffuser Vanes	Innovative	6-8
Intermittent Mixing	Innovative	6-10
Pulsed Large Bubble Mixing	Innovative	6-11
Pump Control Optimization	Innovative	6-12
Critical Oxygen Point Control	Emerging	6-13
Membrane Air Scour Alternatives	Emerging	6-14
Ultra-fine Bubble Diffusers	Emerging	6-16
Automated Channel Routing for UV Disinfection	Emerging	6-18
Low Pressure High Output Lamps for UV Disinfection	Emerging	6-19
Solar Drying of Sewage Sludge	Emerging	6-20

Overview

In 2008, there were 14,780 municipal wastewater treatment plants operating in the United States. These plants ranged in size from a few hundred gallons per day (GPD) to more than 1440 million gallons per day (MGD). Early efforts in water pollution control began in the late 1800s with construction of facilities to prevent human waste from reaching drinking water supplies. Since the passage of the 1972 Amendments to the Federal Water Pollution Control Act (Clean Water Act [CWA]), municipal wastewater treatment facilities have been designed and built or upgraded to abate an ever-increasing volume and diversity of pollutants. With few exceptions, the CWA requires that municipal wastewater treatment plant discharges meet a minimum of secondary treatment. However, in 2008, nearly 37 percent of the municipal facilities produced and discharged effluent at higher levels of treatment than the minimum federal standards for secondary treatment. In many cases, this is due to more stringent water quality based requirements.

This document updates the original 2008 publication "Emerging Technologies for Wastewater Treatment and In-Plant Wet Weather Management" EPA 832-R-06-006 and provides information on four of the five categories of development regarding emerging wastewater treatment and in-plant wet weather management technologies. Information in the form of technology fact sheets on established technologies is not included. The five categories are:

1. **Research** – Technologies in the development stage and/or have been tested at a laboratory or bench scale only.

2. **Emerging** – Technologies that have been tested at a pilot or demonstration scale, or have been implemented at full scale in 3 or fewer installations or for less than 1 year.

3. **Innovative** – Technologies that have been implemented at full scale for less than five years, or have some degree of initial use (i.e., implemented in more than three but less than 1 percent [150] of US treatment facilities).

4. **Established** – Technologies that have been used at more than 1 percent (150) of US treatment facilities or have been available and widely implemented for more than five years. (Note: Fact sheets for established technologies are outside the scope of this document and, therefore not included.)

5. **Adaptive Use** – Some wastewater treatment processes have been established for years, but their use has not been static. In some cases, an established technology may have been modified or adapted resulting in an emerging technology. In other cases, a process that was developed to achieve one treatment objective is now being applied in different ways or to achieve additional treatment objectives. During the operation of treatment systems using these established technologies, engineers, and operators have altered and improved their efficiency and performance. This document includes established technologies that have undergone recent modifications or are used in new applications.

This document also provides information on each technology, except for “established”, its objective, its description, its state of development, available cost information, associated contact names, and related data sources. For each technology, this document further evaluates technologies against various criteria, although it does not rank or recommend any one technology over another. In some cases, the only available information is from the vendor or researcher, and has not been independently verified. Research needs are also identified to guide development of innovative and emerging technologies and improve established ones.

Knowledge about technologies tends to evolve. The information provides a snapshot at a point in time; what is understood at one point in time may change as more information develops. This includes knowledge about operating mechanisms as well as the relative and absolute costs and features of a particular technology. Inquiries into the current state of knowledge are an important step when considering implementation of any technology.

Chapter 1

Introduction and Approach

1.1 Introduction

In 2008, there were 14,780 municipal wastewater treatment plants operating in the United States. These plants ranged in size from a few hundred gallons per day (GPD) to more than 1440 million gallons per day (MGD). Early efforts in water pollution control began in the late 1800s with construction of facilities to prevent human waste from reaching drinking water supplies. Since the passage of the 1972 Amendments to the Federal Water Pollution Control Act (known as the Clean Water Act [CWA]), municipal wastewater treatment facilities have been designed and built or upgraded to abate an ever-increasing volume and diversity of pollutants. The CWA requires that municipal wastewater treatment plant discharges meet a minimum of secondary treatment. However, in 2008, nearly 37 percent of the municipal facilities produced and discharged effluent at higher levels of treatment than the minimum federal standards for secondary treatment.

To meet the challenge of keeping progress in wastewater pollution abatement ahead of population growth, changes in industrial processes, and technological developments, EPA is providing this document to make information available on recent advances and innovative techniques. This document updates the original 2008 publication "Emerging Technologies for Wastewater Treatment and In-Plant Wet Weather Management" EPA 832-R-06-006.

The goal of this document is straight forward—to provide a guide for persons seeking information on innovative and emerging wastewater treatment technologies. The guide lists new technologies, assesses their merits and costs, and provides sources for further technological investigation. This document is intended to serve as a tool for wastewater facility owners/utilities, operators, planners, and consultants.

New technologies typically follow a development process that leads from laboratory and bench-scale investigations to pilot studies, and to initiate use or "full-scale demonstrations" before the technology is considered established. Not all technologies survive the entire development process. Some fail in the laboratory or at pilot stages; others see limited application in the field, but poor performance, complications, or unexpected costs may cause them to lose favor. Even technologies that become established may lose favor in time, as technological advances lead to obsolescence. In short, technologies are subject to the same evolutionary forces present in nature; those that cannot meet the demands of their environment fail, while those that adapt to changing technological, economic and regulatory climates can achieve long-standing success and survival in the market.

Some wastewater treatment processes have been established for many years, but that does not mean that they are static. During the operation of treatment systems using these established technologies, engineers and operators have altered and improved efficiency and performance. In other cases, established technologies applied to one aspect of treatment have

been modified so that they can perform different objectives. Often, better performance can be achieved by linking established processes in innovative ways. This document includes established technologies that have undergone recent modifications or are used in new applications (adaptive use). These technologies are evaluated in the chapters alongside the innovative, emerging, and research technologies.

1.2 Approach

To develop this reference document, the investigators sought information from a variety of sources, identified new technologies, prepared cost summaries, where information was available, for all technologies, and evaluated technologies deemed to be innovative. This method is described below and in Figure 1-1.

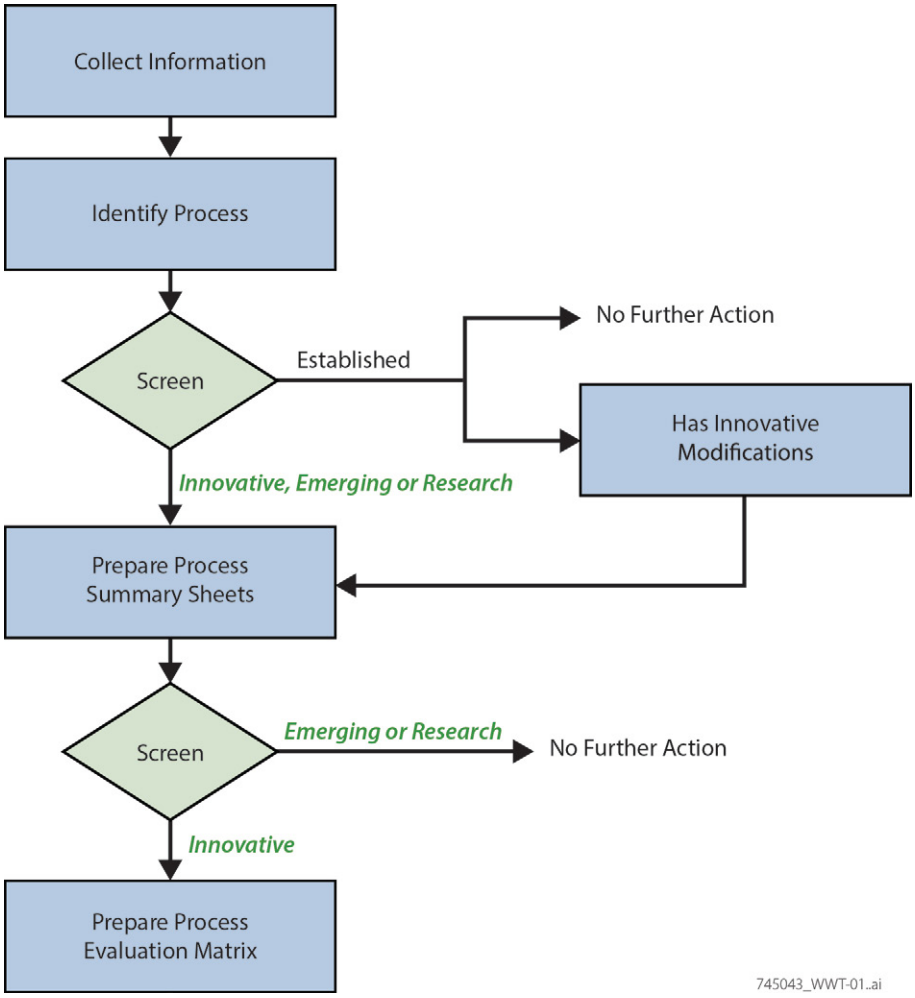

Figure 1.1—Flow Schematic for Document Development

1.2.1 Information Collection and New Process Identification

The collection of information and identification of new technology provided the foundation for subsequent work. To identify new treatment process technologies, investigators gathered information and focused on relevant Water Environment Federation (WEF) and American

Society of Civil Engineers (ASCE) conference proceedings, as well as monthly publications from these and other organizations such as International Water Association (IWA).

"Gray" Literature – Vendor-supplied information, Internet research, and consultants' technical reports comprise the information collected in this category.

Expert Panel – A panel of industry experts including those from technical associations, consulting practice, utilities, and academia was organized to identify emerging wastewater treatment technologies.

Technologies identified through search of the above sources were screened to determine their classification as described below.

1.2.2 Initial Screened Technologies

This project focuses on emerging technologies that appear to be viable, but have not yet been accepted as established processes in the United States. Specific screening criteria used to define the state of development for processes are described in the following paragraphs. This screening resulted in:

- 3 research technologies
- 22 emerging technologies
- 31 innovative technologies
- 7 adaptive use technologies

Research – These technologies are in the development stage and/or have been tested at laboratory or bench scale. New technologies that have reached the demonstration stage overseas, but cannot yet be considered to be established there, are also considered to be research technologies with respect to North American applications.

Emerging – Technologies that have been tested at a pilot or demonstration scale, or have been implemented at full scale in 3 or fewer installations or for less than 1 year.

Innovative – Technologies that meet one of the following criteria were classified as innovative:

- They have been tested as a full-scale demonstration.
- They have been available and implemented in the United States for less than five years.
- They have some degree of initial use (i.e., implemented in less than 1 percent of municipalities (150) throughout the United States).
- They are established technologies from overseas.

Established – In most cases, these processes are used at more than 1 percent of full-scale facilities (150) in North America; but there are some exceptions based upon specific considerations. The established category may include technologies that are widely used although introduced more recently in North America. Due to the extensive number of established technologies and variations in each technology, established technologies are only listed in this report. None are described in depth in this document and Technology Summary Sheets are not provided for established technologies.

Adaptive Use – In some cases, an established technology such as the UCT (University of Cape Town) process may have been modified or adapted, resulting in an emerging technology such as the Modified UCT. In other cases, a process like Actiflo® was developed to remove solids from wet weather flows but is now also being used to polish final effluent.

The focus of this document is on Innovative Technologies along with preliminary information on Emerging and Research Technologies. Early in the development process (the laboratory stage or few full scale installations), data are usually insufficient to prove or disprove general technology viability at full scale. Available information on these Emerging or Research technologies is presented in this document. Technologies on the other end of the developmental scale, those defined as Established in North America, are excluded from the detailed assessments on the assumption that they are proven, although still relatively new.

The differentiation between technologies established in Europe or Asia and those that have reached similar status in the United States can be critical since technologies that have been applied successfully in other countries have not always flourished here in the United States. Because the viability of imported technologies is not guaranteed, established processes from overseas are classified as innovative technologies for this project, unless they are proven in North American applications.

Some technologies fall into a “gray area” between the Research and Innovative categories. Technologies that fall into this category are incorporated into the Emerging category. The screening assessment is summarized by chapter in Tables 1.1 through 1.5.

- Table 1.1 summarizes the treatment technologies for Chapter 2 – Physical/Chemical Treatment Processes.
- Table 1.2 summarizes the treatment technologies for Chapter 3 – Biological Treatment Processes.
- Table 1.3 summarizes the treatment technologies for Chapter 4 – In-Plant Wet Weather Management Processes.
- Table 1.4 summarizes the treatment technologies for Chapter 5 – Process Monitoring Technologies.
- Table 1.5 summarizes the treatment technologies for Chapter 6 – Energy Conservation Measures.

All the cost estimates provided in this document contain a certain degree of expert judgment or educated analysis concerning the various cost elements that comprise the estimates. This is true when cost estimates are based on limited or no information where in some cases little more than process type, location, and plant capacity are known. Therefore, cost estimates are at best order-of-magnitude level per American Association of Cost Engineers (AACE) International classification. However, numerous peripheral factors could also interfere with the accuracy of the order-of-magnitude level cost estimates. Considering these facts, the reader should keep in mind that site-specific applications and local requirements should be considered to increase the accuracy of cost estimates provided in this document.

Knowledge about technologies tends to evolve. The information provides a snapshot at a point in time; what is understood at one point in time may change as more information develops. This includes knowledge about operating mechanisms as well as the relative and absolute

costs and features of a particular technology. Inquiries into the current state of knowledge are an important step when considering implementation of any technology.

1.2.3 Development of Technology Summary Sheets

Technologies categorized as research, emerging, innovative, or adaptive use are each summarized on an individual Technology Summary sheet. Each process generally includes the following information:

Objective – Description of the goal of the technology.

State of Development – Where and how the technology has been applied (i.e., resulting in being placed in the corresponding category: research; emerging; innovative; or adaptive use).

Description – A brief overview of the technology.

Comparison to Established Technologies – Advantages and disadvantages of innovative, emerging, and research technologies are compared to more commonly used technologies.

Available Cost Information – Approximate range of capital and operations and maintenance costs, and assumptions made in developing them (when reliable information was available).

Vendors Name(s) – Name, address, telephone numbers, web address, and other contact information for equipment manufacturers and suppliers.

Installation(s) – Name, address, telephone numbers, and other contact information for utilities and facilities where the technology has been used (full or pilot scale).

Key Words for Internet Search – Because this document is not intended to provide a comprehensive list of vendors for these technologies, key words have been added to aid the reader in finding additional vendors and current product information on the Internet.

Data Sources – References used to compile the technology summary. Specific citations to data sources are provided as appropriate within the individual technology summary sheets that were prepared for this update (noted at the top of the sheet as “prepared 2012”). Data not cited should be assumed to be provided by the technology vendor. Technology summaries labeled as “updated 2012” or “prepared 2008” include data from the listed sources but it may not be cited within the text.

Table 1.1—Summary of Treatment Technologies
Chapter 2 – Physical/Chemical Treatment Processes

Technology and Advancements (Listed in process flow sequence)	Applications								
	C-BOD Removal	Phosphorus Removal	Nitrification-Ammonia Removal	Denitrification – Nitrogen Removal	Solids – Liquid Separation (TDS and TSS)	Targeted Contaminants Removal	Disinfection	Physical/Chemical Monitoring	Biochemical Monitoring
Established Technologies (technology summaries not included)									
Adsorption									
Activated Alumina Media						●			
Granular-Activated Carbon (GAC)		●		●	●				
Granular Iron Based Media		●							
Powdered Activated Carbon (PAC)		●			●				
Disinfection									
Ozone							●		
Chlorine/Chlorine Dioxide/Liquid Chlorine/Dechlorination							●		
Halogens (Bromine)							●		
UltraViolet (UV) Disinfection							●		
Flocculation									
Nutrient Removal									
Air Stripping			●			●			
Chemically Enhanced Primary Treatment		●			●				
Denitrification Filters		●		●	●				
Ion-Exchange			●			●			
Chemical Precipitation*									
– Alum Addition		●			●				
– Iron Salts Addition		●			●				
– Zeolite					●				
Solids Contact Clarifier for P Removal		●	●		●				
Oxidation									
Chemical Oxidation									
– Chlorine/Hypochlorite/Chlorine Dioxide						●	●		
– Hydrogen Peroxide						●	●		

Table 1.1—Summary of Treatment Technologies
Chapter 2 – Physical/Chemical Treatment Processes (continued)

Technology and Advancements (Listed in process flow sequence)	Applications								
	C-BOD Removal	Phosphorus Removal	Nitrification-Ammonia Removal	Denitrification – Nitrogen Removal	Solids – Liquid Separation (TDS and TSS)	Targeted Contaminants Removal	Disinfection	Physical/Chemical Monitoring	Biochemical Monitoring
– Hydroxyl Radical						●	●		
– Oxygen (Atomic and Molecular)						●	●		
– Ozone						●	●		
Advanced Oxidation Processes									
– Catalytic Oxidation						●	●		
– Fenton's Reagent (H_2O_2 + Ferrous Ion)						●	●		
– Photo Catalysis (UV + TiO_2)						●	●		
– Supercritical Water Oxidation						●	●		
Preliminary/Primary Treatment									
Advanced Grit Removal System (AGRS)									
– HEADCELL™					●				
– GRITKING™					●				
– PISTAGRIT™					●				
– HYDROGRIT™					●				
Grit Removal									
– Traveling Bridge					●				
Screening									
– Fine Screening					●				
– Micro Screening					●				
– Rotary Screening					●				
– Step Screening					●				
– Microsieves		●			●	●			
Solids Removal									
Dissolved Air Flotation (DAF) Treatment/Settling					●				
Filtration through Media									
– Automatic Backwash Filters (ABW®)		●			●				
– Cloth Media									
○ Disc Filter (DF)		●			●				

Table 1.1—Summary of Treatment Technologies
Chapter 2 – Physical/Chemical Treatment Processes (continued)

Technology and Advancements (Listed in process flow sequence)		Applications								
		C-BOD Removal	Phosphorus Removal	Nitrification-Ammonia Removal	Denitrification – Nitrogen Removal	Solids – Liquid Separation (TDS and TSS)	Targeted Contaminants Removal	Disinfection	Physical/Chemical Monitoring	Biochemical Monitoring
○ Drum Filter			●			●				
○ Diamond-Shaped Filters			●			●				
– Pulsed Bed Filter			●			●				
– Silica Media (One- and Two-Stage)										
○ Conventional Downflow			●			●				
○ Deep-Bed Downflow Filters			●			●				
○ Deep-Bed Upflow Continuous Backwash Filters			●			●				
Filtration through Membranes										
– Electrodialysis						●	●			
– Microfiltration			●			●	●			
– Ultrafiltration			●			●	●			
Innovative Technologies	**Summary on page**									
Nutrient Removal										
Blue PRO™ Reactive Media Filtration	2-6		●			●				
Phosphorus Recovery (Struvite or Calcium Phosphate Precipitation)	2-8		●	●	●					
Solids Removal										
Compressible Media Filtration (CMF)	2-10	●	●			●				
Magnetite Ballasted Sedimentation	2-14		●			●				
Multi-stage Filtration	2-16		●			●				
Nanofiltration and Reverse Osmosis	2-18		●			●	●			
Adaptive Use Technologies	**Summary on Page**									
Disinfection										
Microwave Ultraviolet (UV) Disinfection	2-20							●		
Solids Removal										
Ballasted High Rate Clarification										

Table 1.1—Summary of Treatment Technologies
Chapter 2 – Physical/Chemical Treatment Processes (continued)

Technology and Advancements (Listed in process flow sequence)		Applications								
		C-BOD Removal	Phosphorus Removal	Nitrification-Ammonia Removal	Denitrification – Nitrogen Removal	Solids – Liquid Separation (TDS and TSS)	Targeted Contaminants Removal	Disinfection	Physical/Chemical Monitoring	Biochemical Monitoring
(BHRC) Processes										
– Actiflo® Process	2-22		●			●				
– Densadeg® Process	2-24		●			●				
Emerging Technologies	**Summary on page**									
Disinfection										
Alternative Disinfectants	2-26									
– PAA - Peracetic acid								●		
– BCDMH								●		
Nutrient Removal										
Ammonia Recovery Analyzer	2-29						●			
Oxidation										
Blue CAT™	2-31		●			●	●			
Preliminary/Primary Treatment										
Salsnes Filter	2-33	●								
Research Technologies										
None at this time										

Table 1.2—Summary of Treatment Technologies
Chapter 3 – Biological Treatment Processes

Technology and Advancements (Listed in process flow sequence)	Applications								
	C-BOD Removal	Phosphorus Removal	Nitrification-Ammonia Removal	Denitrification – Nitrogen Removal	Solids – Liquid Separation (TDS and TSS)	Targeted Contaminants Removal	Disinfection	Physical/Chemical Monitoring	Biochemical Monitoring
Established Technologies (technology summaries not included)									
Anaerobic Processes									
Anaerobic Attached Growth System									
– Upflow Packed-Bed Attached Growth Reactor	●								
– Upflow Attached Growth Anaerobic	●								
– Expanded-Bed Reactor (Anaerobic Expanded Bed Reactor [AEBR])	●								
– Downflow Attached Growth Process	●								
Anaerobic Contact Process									
– Anaerobic Sequencing Batch Reactor (ASBR)	●								
– Upflow Anaerobic Sludge Blanket (UASB)	●								
– ANaerobic FLuidized Bed Reactor (ANFLOW)	●								
BOD Removal and Nitrification									
Biolac-Aerated Lagoon	●		●						
Complete Mix-Activated Sludge (CMAS) Process	●		●						
Contact Stabilization	●		●						
Conventional Extended Aeration	●		●						
Countercurrent Aeration System (CCAS™)	●		●	●					
Cyclic Activated Sludge System (CASS™)	●		●	●					
Facultative and Aerated Lagoons	●		●						
High-Purity Oxygen (HPO)	●		●						
Intermittent Cycle Extended Aeration System (ICEAS™)	●		●	●					
Kraus Process	●		●						
Oxidation Ditch/Aerated Lagoons	●		●						
Sequencing Batch Reactor (SBR)	●		●	●					
Staged Activated-Sludge Process	●		●						
Step Feed	●		●						

Table 1.2—Summary of Treatment Technologies
Chapter 3 – Biological Treatment Processes (continued)

Technology and Advancements (Listed in process flow sequence)	Applications								
	C-BOD Removal	Phosphorus Removal	Nitrification-Ammonia Removal	Denitrification – Nitrogen Removal	Solids – Liquid Separation (TDS and TSS)	Targeted Contaminants Removal	Disinfection	Physical/Chemical Monitoring	Biochemical Monitoring
Biofilm Processes									
Biological Aerated Filters (BAF)									
– Biofor®	●		●	●					
– Biostyr®	●		●	●					
Fluidized Bed Bioreactor (FBBR)	●		●						
Integrated fixed-Film Activated Sludge (IFAS)									
– IFAS – Submerged Mobile Media	●		●						
– IFAS – Submerged Fixed Media	●		●						
Moving-Bed Bio Reactor (MBBR) Process	●		●	●					
Rotating Biological Contactor (RBC)	●		●						
Submerged Rotating Biological Contactor (SRBC)	●		●						
Trickling Filter (TF)	●		●						
Trickling Filter/Solids Contactor (TF/SC)	●		●						
Nitrogen Removal									
Bardenpho® (Four Stage)	●		●	●					
Biodenitro™	●		●	●					
Denitrification Filter				●	●				
Ludzack-Ettinger	●		●	●					
Modified Ludzack-Ettinger (MLE)	●		●						
Orbal™ Process	●		●						
Schreiber™ Process	●		●						
Simultaneous Nitrification denitrificatioN (SNdN) Process	●		●						
Step Feed (Alternating Anoxic and Aerobic)	●		●						
Wuhrman	●		●						
Nitrogen and Phosphorus Removal									
Anaerobic/Anoxic/Oxic (A2/O)	●	●	●	●					
Bardenpho® (Five Stage)	●	●	●	●					

Table 1.2—Summary of Treatment Technologies
Chapter 3 – Biological Treatment Processes (continued)

Technology and Advancements (Listed in process flow sequence)		Applications								
		C-BOD Removal	Phosphorus Removal	Nitrification-Ammonia Removal	Denitrification – Nitrogen Removal	Solids – Liquid Separation (TDS and TSS)	Targeted Contaminants Removal	Disinfection	Physical/Chemical Monitoring	Biochemical Monitoring
Johannesburg Process		●	●	●	●					
Step Feed BNR Process		●		●	●					
University of Cape Town (UCT)		●	●	●	●					
Virginia Initiative Plant (VIP)		●	●	●	●					
Phosphorus Removal										
Phoredox (Anaerobic/Oxic [A/O])		●	●							
Phostrip		●	●							
Membrane Processes										
Membrane Bioreactor (MBR)										
– Tubular		●	●	●		●				
– Hollow-Fiber		●	●	●		●				
– Spiral Wound		●	●	●		●				
– Plate and Frame		●	●	●		●				
– Pleated Cartridge Filters		●	●	●		●				
Innovative Technologies	**Summary on page**									
Bioaugmentation										
Bioaugmentation	3-7									
– External Bioaugmentation		●		●	●					
– Seeding from Commercial Sources of Nitrifiers		●		●	●					
○ In-Pipe Technology		●		●	●					
○ Trickling Filter and Pushed Activated Sludge (TF/PAS) Process		●		●	●					
○ Seeding from External Dispensed Growth Reactors Treating Reject Waters (Chemostat Type)		●		●	●					
○ In-Nitri® Process		●		●	●					

Table 1.2—Summary of Treatment Technologies
Chapter 3 – Biological Treatment Processes (continued)

Technology and Advancements (Listed in process flow sequence)		Applications								
		C-BOD Removal	Phosphorus Removal	Nitrification-Ammonia Removal	Denitrification – Nitrogen Removal	Solids – Liquid Separation (TDS and TSS)	Targeted Contaminants Removal	Disinfection	Physical/Chemical Monitoring	Biochemical Monitoring
○ Immobilized Cell-Augmented Activated Sludge (ICASS) Process		●		●	●					
○ Seeding from Parallel Processes		●		●	●					
○ Seeding from Downstream Process		●		●	●					
– In Situ Bioaugmentation										
○ DE-nitrification and PHosphate accumulation in ANOXic (DEPHANOX) Process		●		●	●					
○ Bio-Augmentation Regeneration/Reaeration (BAR) Process		●		●	●					
○ Bio-Augmentation Batch Enhanced (BABE) Process		●		●	●					
○ Aeration Tank 3 (AT3) Process		●		●	●					
○ Main stream AUtotrophic Recycle Enabling Enhanced N-removal (MAUREEN) Process		●		●						
○ Regeneration DeNitrification (R-DN) Process		●		●	●					
○ Centrate and RAS Reaeration Basin (CaRRB) Process		●		●	●					
Nitrogen Removal										
Deammonification (Sidestream)	3-16	●		●	●					
Nitritation and Denitritation (Sidestream)	3-19	●		●	●					
Small Site										
Deep-Shaft Activated Sludge/ VERTREAT™	3-22	●								

Table 1.2—Summary of Treatment Technologies
Chapter 3 – Biological Treatment Processes (continued)

Technology and Advancements (Listed in process flow sequence)		Applications								
		C-BOD Removal	Phosphorus Removal	Nitrification-Ammonia Removal	Denitrification – Nitrogen Removal	Solids – Liquid Separation (TDS and TSS)	Targeted Contaminants Removal	Disinfection	Physical/Chemical Monitoring	Biochemical Monitoring
Solids Minimization										
Cyclic Metabolic Environment	3-23	●	●	●	●					
Solids Settleability										
Magnetite Ballasted Activated Sludge	3-25	●	●	●	●	●				
Adaptive Use Technologies	**Summary on page**									
Nitrogen and Phosphorus Removal										
Biological-Chemical Phosphorus and Nitrogen Removal (BCFS) Process	3-27	●	●	●	●					
Modified University of Cape Town (MUCT) Process	3-29	●	●	●	●					
Westbank Process	3-30	●	●	●	●					
Phosphorus Removal										
Modified Anaerobic/Oxic (A/O) Process	3-31	●	●	●	●					
Emerging Technologies	**Summary on page**									
Membrane Processes										
Membrane Biofilm Reactor (MBfR)	3-32	●	●	●		●	●			
Vacuum Rotation Membrane (VRM®) System	3-34	●	●			●				
Nitrogen Removal										
OpenCel Focused Pulse	3-35				●					
Nitrogen and Phosphorus Removal										
Integrated Fixed-film Activated Sludge (IFAS) with Biological Phosphorus Removal	3-36	●		●	●					
Solids Minimization										
Multi-Stage Activated Biological Process (MSABP™)	3-37	●		●	●					
Solids Settleability										
Aerobic Granular Sludge Process (AGSP)	3-38	●	●	●	●					

Table 1.2—Summary of Treatment Technologies
Chapter 3 – Biological Treatment Processes (continued)

Technology and Advancements (Listed in process flow sequence)		Applications								
		C-BOD Removal	Phosphorus Removal	Nitrification-Ammonia Removal	Denitrification – Nitrogen Removal	Solids – Liquid Separation (TDS and TSS)	Targeted Contaminants Removal	Disinfection	Physical/Chemical Monitoring	Biochemical Monitoring
Research Technologies	**Summary on page**									
Anaerobic Processes										
Anaerobic Migrating Blanket Reactor (AMBR®)	3-41	●								
Anaerobic Membrane BioReactor (An-MBR)	3-43	●	●							
Electricity Generation										
Microbial Fuel Cell (MFC) Based Treatment System	3-45	●	●							

Table 1.3—Summary of Treatment Technologies
Chapter 4 – In-Plant Wet Weather Management Processes

Technology and Advancements (Listed in process flow sequence)		Applications								
		C-BOD Removal	Phosphorus Removal	Nitrification-Ammonia Removal	Denitrification – Nitrogen Removal	Solids – Liquid Separation (TDS and TSS)	Targeted Contaminants Removal	Disinfection	Physical/Chemical Monitoring	Biochemical Monitoring
Established Technologies (technology summaries not included)										
Treatment										
Dispersed Air Flotation			●			●				
Dissolved Air Flotation (DAF)			●			●				
Enhanced Clarification/High Rate Clarification (HRC)										
Ballasted Flocculation (Actiflo® and Microsep®)			●			●				
Lamella Plate Settlers			●			●				
Screening						●				
Vortex Separation						●				
Innovative Technologies	**Summary on page**									
Treatment										
Compressible Media Filtration (CMF)	4-4		●			●				
Continuous Deflection Separator (CDS)	4-8					●				
TRASHMASTER™ Net Capture System	4-10					●				
Treatment Shaft	4-11					●				
Storage										
HYDROSELF® Flushing Gate	4-13					●				
Tipping Flusher®	4-15					●				
Adaptive Use Technologies										
BioActiflo Process	4-19	●				●				
Emerging Technologies	**Summary on page**									
Treatment										
Alternative Disinfectants (PAA; BCDMH)	4-16							●		
Research Technologies										
None at this time										

Table 1.4—Summary of Treatment Technologies
Chapter 5 – Process Monitoring Technologies

Technology and Advancements (Listed in process flow sequence)		Applications								
		C-BOD Removal	Phosphorus Removal	Nitrification-Ammonia Removal	Denitrification – Nitrogen Removal	Solids – Liquid Separation (TDS and TSS)	Targeted Contaminants Removal	Disinfection	Physical/Chemical Monitoring	Biochemical Monitoring
Established Technologies (technology summaries not included)										
Microbial Activity										
Dissolved Oxygen Analyzer										●
Oxidation Reduction Potential (ORP) Probe										●
Solids Retention Time (SRT) Controller										●
Solids										
Sludge Blanket Level Detector									●	
Total Suspended Solids Analyzer									●	
Water Quality										
Online Cl_2 Residual									●	
pH Probes									●	
Innovative Technologies	**Summary on page**									
Microbial Activity										
Fluorescence In Situ Hybridization (FISH) for Filamentous and Nitrifying Bacteria	5-4									●
Microtox®/Online Microtox®	5-5									●
Nicotinamide Adenine Dinucleotide (NADH) Probes	5-6									●
Online Respirometry	5-7									●
Solids										
Microwave Density Analyzer	5-8								●	●
Water Quality										
Nutrient Analyzers, Probes, and Electrodes	5-9								●	●
Adaptive Use Technologies										
None at this time										

Table 1.4—Summary of Treatment Technologies
Chapter 5 – Process Monitoring Technologies (continued)

Technology and Advancements (Listed in process flow sequence)		Applications								
		C-BOD Removal	Phosphorus Removal	Nitrification-Ammonia Removal	Denitrification – Nitrogen Removal	Solids – Liquid Separation (TDS and TSS)	Targeted Contaminants Removal	Disinfection	Physical/Chemical Monitoring	Biochemical Monitoring
Emerging Technologies	**Summary on page**									
Microbial Activity										
Biological Micro-Electro-Mechanical Systems (BioMEMS)	5-12									●
FISH for Phosphorus Accumulating Organisms (PAOs)	5-13									●
Handheld Advanced Nucleic Acid Analyzer (HANAA)	5-14									●
Immunosensors and Immunoassays	5-15									●
Water Quality										
Photo-electro Chemical Oxygen Demand (PeCOD™)	5-16									●
Research Technologies										
None at this time										

Table 1.5—Summary of Treatment Technologies
Chapter 6 – Energy Conservation Measures

Technology and Advancements (Listed in process flow sequence)		Applications								
		C-BOD Removal	Phosphorus Removal	Nitrification-Ammonia Removal	Denitrification – Nitrogen Removal	Solids – Liquid Separation (TDS and TSS)	Targeted Contaminants Removal	Disinfection	Physical/Chemical Monitoring	Biochemical Monitoring
Established Technologies (technology summaries not included)										
Aeration										
Adjustment of Submergence of Mechanical Aerators			●	●						
Bioprocess Intelligent Optimization System (BIOS)			●						●	
Cycling Mechanical Aerators On and Off			●						●	
Fine-Pore Aeration Diffusers			●							
High Speed (Gearless) Turbo Blowers			●							
Mixing										
Hyperbolic Mixers				●						
Pumping										
NEMA Premium® efficiency motors		●								
Variable Frequency Drives (VFDs)		●								
Other Processes										
Incineration Heat Recovery [Applications: N/A]										
Innovative Technologies	**Summary on page**									
Aeration										
Automated SRT/DO Control	6-4		●						●	
Dual Impeller Aerator (mechanical mixing)	6-4		●	●						
Integrated Air Flow Control	6-6		●						●	
Single-stage Centrifugal Blowers with Inlet Guide Vanes and Variable Diffuser Vanes	6-8		●							
Mixing										
Intermittent Mixing	6-10			●					●	
Pulsed Large Bubble Mixing	6-11				●					
Pumping										
Pump Control Optimization	6-12	●							●	
Adaptive Use Technologies										
None at this time										

Table 1.5—Summary of Treatment Technologies
Chapter 6 – Energy Conservation Measures (continued)

Technology and Advancements (Listed in process flow sequence)		Applications								
		C-BOD Removal	Phosphorus Removal	Nitrification-Ammonia Removal	Denitrification – Nitrogen Removal	Solids – Liquid Separation (TDS and TSS)	Targeted Contaminants Removal	Disinfection	Physical/Chemical Monitoring	Biochemical Monitoring
Emerging Technologies	**Summary on page**									
Aeration										
Critical Oxygen Point Control	6-13		●						●	
Membrane Air Scour Alternatives	6-14		●						●	
Ultra-fine Bubble Diffusers	6-16	●	●	●						
Disinfection										
Automated Channel Routing for UV Disinfection	6-18							●	●	
Low Pressure High Output Lamps for UV Disinfection	6-19							●		
Other Processes										
Solar Drying of Sewage Sludge	6-20					●				
Research Technologies										
None at this time										

1.2.4 Evaluation of Technologies

Technologies defined as innovative in the initial screening were subjected to a detailed evaluation. Each technology was evaluated with respect to the descriptive and comparative criteria described below. Descriptive criteria include:

- **State of Development** – Describes the stage of development for each technology, ranging from bench scale development to full-scale operations.
- **Applicability** – Qualitatively assesses in which market the technology is designed to be used.
- **Effluent Reuse** – Describes the reuse of treated effluent as specifically direct, indirect, potable and/or nonpotable.
- **Benefits** – Considers the potential benefits gained (e.g., capital or operational savings) from implementation of the technology.

Designations for each descriptive criterion are presented in Table 1.6.

Table 1.6—Descriptive Evaluation Criteria

Criterion	Designation	Description
State of Development	B	Bench scale
	P	Pilot scale
	I	Full-scale industrial applications
	M	Full-scale municipal applications
	O	Full-scale operations overseas
	N	Full-scale operations in North America
Applicability	I	Industrywide
	F	Few plants
	S	Primarily small plants
	L	Primarily large plants
Effluent Reuse	Dp	Direct potable
	Dn	Direct nonpotable
	Ip	Indirect potable
	In	Indirect nonpotable
Potential Benefits	C	Capital savings
	I	Intense operational demand
	O	Operational/Maintenance savings
	S	Shock load capacity
	W	Wet weather load capacity
	E	Effluent quality

Comparative criteria include:

- **Impact on Existing Facilities or Other Processes** – Describes whether or not the technology requires the involvement of extensive design changes, and the degree to which the existing facilities will be disturbed.
- **Complexity** – Considers the installation, startup, and shutdown methods for the technology.

Air/Odor Emissions – Considers if the process has impacts on air and odor emissions for the facility.

- **Energy** – Considers the amount of energy required to adequately maintain the process and if any energy saving is possible.
- **Footprint** – Considers how the footprint helps to identify the land needed to expand a facility for increased capacity.
- **Retrofitting** – Considers if the process can be used to modify old treatment plants without extensive reconstruction.

The above criteria compared individual technologies with other technologies in the same category, and were scored positive, neutral/mixed, or negative.

The criteria and ratings were applied to each innovative technology and the results are presented in matrix format. Where available information was insufficient to rate a technology for a criterion, no rating is given. The project team and reviewers assessed each technology based on the limited information gathered and their collective judgment, experience, and opinions. Results of the evaluation are presented in subsequent chapters.

1.3 Reference Document Format and Use

The remainder of the reference document is divided into chapters based upon general technologies, one chapter is dedicated to each of the following categories:

- Chapter 2 – Physical/Chemical Treatment Processes
- Chapter 3 – Biological Treatment Processes
- Chapter 4 – In-Plant Wet Weather Flows Management Processes
- Chapter 5 – Process Monitoring Technologies
- Chapter 6 – Energy Conservation Measures
- Chapter 7 – Research Needs

Where appropriate to more than one category, a single technology may be included in more than one chapter; for example, the *Alternative Disinfectants (PAA; BCDMH)* technology fact sheet appears in both Chapter 2 and Chapter 4. Each chapter provides an overview of the appropriate technologies, discusses the state of development for each, presents an evaluation matrix for innovative technologies, and concludes with a Technology Summary Sheet for each research, emerging, innovative, and adaptive use technology included in that chapter.

The technology summaries and evaluation matrices are the cornerstones of each chapter, providing a broad overview of the innovative technologies. Neither the summaries nor the

matrices should be considered definitive technology assessments. Rather, they should be considered stepping stones to more detailed investigations.

Appendix A contains applicable trade associations.

Appendix B contains a list of acronyms and abbreviations.

This document will be updated from time to time. Technologies were reviewed in late 2011 to early 2012.

1.4 Chapter References

Hunter, P. and Lewis, S., Top Ten Biggest Wastewater Treatment Plants, Engineering News Record, April 2, 2012.

U.S. EPA, Clean Watershed Needs Survey 2008 Report to Congress, EPA 832-R-10-002, Office of Water, 2010.

Chapter 2

Physical/Chemical Treatment Processes

2.1 Introduction

For the purpose of this report, physical and chemical treatment processes are defined as treatment technologies that do not include any biomass in the process to achieve the treatment objective. Physical processes remove solids from wastewater as it flows through screens or filter media, or solids are removed by gravity settling or air flotation. Particles entrapped with air float to the surface and can be removed. Chemicals are used in wastewater treatment to create changes in the pollutants that increase the ability to remove them. Changes may include forming floc or a heavier particle mass to improve removal by physical processes. As a result, chemical addition and physical processes are usually employed together to provide treatment. This chapter focuses on advances in basic physical and chemical treatment processes.

2.2 Technology Assessment

A summary of established, innovative, emerging, and adaptive use technologies (there are no research technologies in this chapter) for physical and/or chemical treatment processes is provided in Table 2.1. A comparative evaluation among innovative technologies is provided in Figure 2.1. Most of the physical chemical processes are established, and they are very essential unit processes that are widely used in various applications in wastewater treatment.

Innovative development in physical and chemical technologies includes BluePRO™ reactive media filtration, phosphorus recovery (struvite or calcium phosphate precipitation), compressible media filtration, magnetite ballasted sedimentation, multi-stage filtration, and nanofiltration and reverse osmosis. These technologies focus on the separation of liquids and solids and phosphorus (which is removed as a solid). Advanced solids separation is critical as a preliminary process step and as an advanced treatment step to reduce suspended solids, plus nutrients and other compounds, in the effluent. The application of these technologies has promoted the reuse of wastewater by providing a very high-quality effluent.

This chapter also discusses some of the adaptive uses or unique applications of already established technologies. For example, microwave ultraviolet disinfection is an adaptation of UV disinfection that can reduce energy consumption and increase lamp life. The Ballasted High Rate Clarification (BHRC) processes use a high-rate chemical/physical clarification process that involves the formation of suspended solids onto a ballast particle with the aid of a coagulant and polymer. The BHRC process includes the patented Actiflo® and DensaDeg® processes. Emerging technologies include alternative disinfectants like peracetic acid (PAA), ammonia recovery processes including vacuum distillation, BlueCAT™ adsorption filtration which the vendor indicates can be used for removal of microconstituents, with advanced oxidation and the Salsnes filter for primary treatment. These technologies are discussed in the technology summaries in this chapter.

Knowledge about technologies tends to evolve. The information provides a snapshot at a point in time; what is understood at one point in time may change as more information develops. This includes knowledge about operating mechanisms as well as the relative and absolute costs and features of a particular technology. Inquiries into the current state of knowledge are an important step when considering implementation of any technology.

Table 2.1—Physical/Chemical Treatment Processes – State of Development

Established Technologies (technology summaries not included)
Adsorption
Activated Alumina Media
Granular-Activated Carbon (GAC)
Granular Iron Based Media
Powdered Activated Carbon (PAC)
Disinfection
Ozone
Chlorine/Chlorine Dioxide/Liquid Chlorine/Dechlorination
Halogens (Bromine)
UltraViolet (UV) Disinfection
Flocculation
Nutrient Removal
Air Stripping
Chemically Enhanced Primary Treatment
Denitrification Filters
Ion-Exchange
Chemical Precipitation*
– Alum Addition
– Iron Salts Addition
– Zeolite
Solids Contact Clarifier for P Removal
Oxidation
Chemical Oxidation
– Chlorine/Hypochlorite/Chlorine Dioxide
– Hydrogen Peroxide
– Hydroxyl Radical
– Oxygen (Atomic and Molecular)
– Ozone
Advanced Oxidation Processes
– Catalytic Oxidation
– Fenton's Reagent (H_2O_2 + Ferrous Ion)
– Photo Catalysis (UV + TiO_2)
– Supercritical Water Oxidation

Table 2.1—Physical/Chemical Treatment Processes – State of Development

Established Technologies (technology summaries not included) *(continued)*	
Preliminary/Primary Treatment	
Advanced Grit Removal System (AGRS)	
– HEADCELL™	
– GRITKING™	
– PISTAGRIT™	
– HYDROGRIT™	
Grit Removal	
– Traveling Bridge	
Screening	
– Fine Screening	
– Micro Screening	
– Rotary Screening	
– Step Screening	
– Microsieves	
Solids Removal	
Dissolved Air Flotation (DAF) Treatment/Settling	
Filtration through Media	
– Automatic Backwash Filters (ABW®)	
– Cloth Media	
o Disc Filter (DF)	
o Drum Filter	
o Diamond-Shaped Filters	
– Pulsed Bed Filter	
– Silica Media (One- and Two-Stage)	
o Conventional Downflow	
o Deep-Bed Downflow Filters	
o Deep-Bed Upflow Continuous Backwash Filters	
Filtration through Membranes	
– Electodialysis	
– Microfiltration	
– Ultrafiltration	
Innovative Technologies	**Summary on page**
Nutrient Removal	
Blue PRO™ Reactive Media Filtration	2-6
Phosphorus Recovery (Struvite or Calcium Phosphate Precipitation)	2-8
Solids Removal	
Compressible Media Filtration (CMF)	2-10
Magnetite Ballasted Sedimentation	2-14
Multi-stage Filtration	2-16
Nanofiltration and Reverse Osmosis	2-18

Table 2.1—Physical/Chemical Treatment Processes – State of Development

Adaptive Use Technologies	Summary on page
Disinfection	
Microwave Ultraviolet (UV) Disinfection	2-20
Solids Removal	
Ballasted High Rate Clarification (BHRC) Processes	
– Actiflo® Process	2-22
– Densadeg® Process	2-24
Emerging Technologies	**Summary on page**
Disinfection	
Alternative Disinfectants (PAA and BCDMH)	2-26
Nutrient Removal	
Ammonia Recovery	2-29
Oxidation	
Blue CAT™	2-31
Preliminary/Primary Treatment	
Salsnes Filter	2-33
Research Technologies	
None at this time	

Process	Evaluation Criteria									
	Development	Applicability	Benefits	Impact on Processes	Complexity	Air/Odor Emissions	Reuse	Energy	Footprint	Retrofitting
Nutrient Removal										
Blue PRO™ Reactive Media Filtration	I, M, N	S	E	⊖	▲	⊖	Ip, In	⊖	▲	▲
Phosphorus Recovery (Struvite or Calcium Phosphate Precipitation)	I, M, N	L	S	▲	⊖	⊖	Ip, Dn	▲	▲	▲
Solids Removal										
Compressible Media Filters	I, M, N	I	C	⊖	⊖	⊖	Dn	⊖	▲	▲
Magnetite Ballasted Sedimentation	I, M, N	I	C, W, E	⊖	⊖	⊖	Dn, Ip, In	▲	▲	▲
Multi-stage Filtration	I, M, N	I	E	▲	▼	⊖	Ip, Dn	▼	▼	▲
Nanofiltration and Reverse Osmosis	I, M, N	F	O	▲	⊖	⊖	Ip, Dp	▼	▲	▲

Key

Statement of Development

B = Bench scale
I = Full-scale industrial applications
M = Full-scale municipal applications
O = Full-scale operations overseas
P = Pilot
N = Full-scale operations in North America

Applicability

F = Few plants
I = Industrywide
L = Primarily large plants
S = Primarily small plants

Potential Benefits

C = Capital savings
I = Intense operational demand
O = Operational/maintenance savings
S = Shock load capacity
W = Wet weather load capacity
E = Effluent quality

Effluent Reuse

Dp = Direct potable
Dn = Direct nonpotable
Ip = Indirect potable
In = Indirect nonpotable

Comparative Criteria

▲ Positive feature
⊖ Neutral or mixed
▼ Negative feature

Figure 2.1—Evaluation of Innovative Physical/Chemical Treatment Technologies

Nutrient Removal *updated 2012* **Technology Summary**

Blue PRO™ Reactive Media Filtration

Objective:

Remove phosphorus from tertiary wastewater.

State of Development:

Innovative.

Description:

The patented Blue PRO™ reactive filtration system is used to remove phosphorus from wastewater. It combines co-precipitation and adsorption to a reactive filter media in an upflow sand filter. The Blue PRO™ equipment includes continuous backwash moving-bed filtration technology preceded by chemical addition and a proprietary pre-reactor zone. Reactive hydrous ferric oxide-coated sand media is created by using an iron coagulant on the filter media and accomplishes phosphorus removal by adsorption and filtration. This process does not require the media to be changed because it includes a continuous regeneration process. After adsorption, the iron and phosphorus are abraded from the sand grains. The iron and phosphorus passes out in a wastestream while the sand is retained in the system.

The Blue PRO™ system is most suitable for small to medium plants (less than 10 MGD), because of the relatively small area of each filter unit. For a larger plant, it would be difficult to operate and maintain because of the sheer number of filters required for treatment. Blue PRO™ units can be configured to run in series to achieve lower phosphorus removal. The wastestream (containing residual iron) can be recycled to the head of the plant to accomplish chemically enhanced primary treatment. It has been demonstrated that the Blue PRO™ process can achieve monthly average effluent total phosphorus levels as low as 0.009 mg/L to 0.036 mg/L in certain plants (Leaf et al., 2007). However further full scale data is needed to determine how consistently these levels could be achieved and assess the ability of this and other competing technologies to address fluctuations in influent phosphorus flow and loading due to diurnal or seasonal conditions. Concerns regarding this process include the fact that large recycle streams have to be sent to the biological process (Perri et al., 2012). Full-scale facilities are meeting total phosphorus limits of 0.05 mg/L (Newcombe and Lopp, 2010).

Comparison to Established Technologies:

The Blue PRO™ process appears to be similar to other advanced filtration processes preceded by iron addition but includes the reactive adsorption media and proprietary pre-reactor zone and regeneration process. Research by Benisch et al. found that Blue PRO™ provided better total phosphorus removal than other continuous backwash filters and was similar to a multistage adsorption clarifier filter system. BlueWater also provides the BlueCAT™ system, which combines Blue PRO™ with an advanced oxidation process.

Available Cost Information:

Approximate Capital Cost: 1 MGD $178,300; 3 MGD $494,000 uninstalled (2008).
Approximate O&M Costs: 1 MGD $29,380; 3 MGD $84,000 annually (2008).

Vendor Name(s):

Blue Water Technologies, Inc.
10450 North Airport Dr.
Hayden, ID 83835
Telephone: 888-710-2583
Fax: 208-209-0396
Web site: http://www.blueH2O.net

Installation(s):

More than 10 installations in the United States at up to 4-MGD capacity:
Broadway, VA
Coeur d'Alene, ID
Georgetown, CO
Hayden, ID
Marlborough, MA
Plummer, ID
Sheintech, LA
Westerly, MA

Key Words for Internet Search:

Blue PRO, advanced phosphorus removal, phosphorus adsorption

Nutrient Removal *updated 2012* **Technology Summary**

Blue PRO™ Reactive Media Filtration (continued)

Data Sources:

Newcombe, R.L. and Lopp, M. "Advanced Treatment and Mercury Removal to Ultra-low Levels by Reactive Filtration: Project Results from Great Lakes Region Treatment Facilities", 39th Annual Technical Symposium and OPCEA Exhibition, Water Environment Association of Ontario, 2010.Newcombe, R.L., et al. "Phosphorus Removal from Municipal Wastewater by Hydrous Ferric Oxide Reactive Filtration and Coupled Chemically Enhanced Secondary Treatment: Part II – Mechanism," Water Environment Research, Vol. 80, No. 3, pp. 248-256, 2008.

Newcombe, R.L., et al. "Phosphorus Removal from Municipal Wastewater by Hydrous Ferric Oxide Reactive Filtration and Coupled Chemically Enhanced Secondary Treatment: Part I – Performance," Water Environment Research, Vol. 80, No. 3, pp. 238-247, 2008.

Benisch, M. et al., "Can Tertiary Phosphorus Removal Reliably Produce 10 µg/L? Pilot Results from Coeur D'Alene, ID," WEF Nutrient Removal Conference, 2007.

Leaf, W., et al., "Total Phosphorus Removal to Low Levels through Tertiary Reactive Filtration," WEFTEC, 2007.

Perri, K., et al. "Technology Evaluation and Membrane Pilot Study to Achieve Low-Level Phosphorus Limits for Barrie, Ontario". WEFTEC, 2012.

Blue PRO™, "Hydrous Ferric Oxide (HFO) Coated Sand. Adsorptive Media Technical Summary," 2006.

CH2M Hill, Technical Memorandum, "Evaluation of Blue PRO Process at the Hayden Wastewater Research Facility – Final Summary Report," 2006.

http://www.blueh2o.net

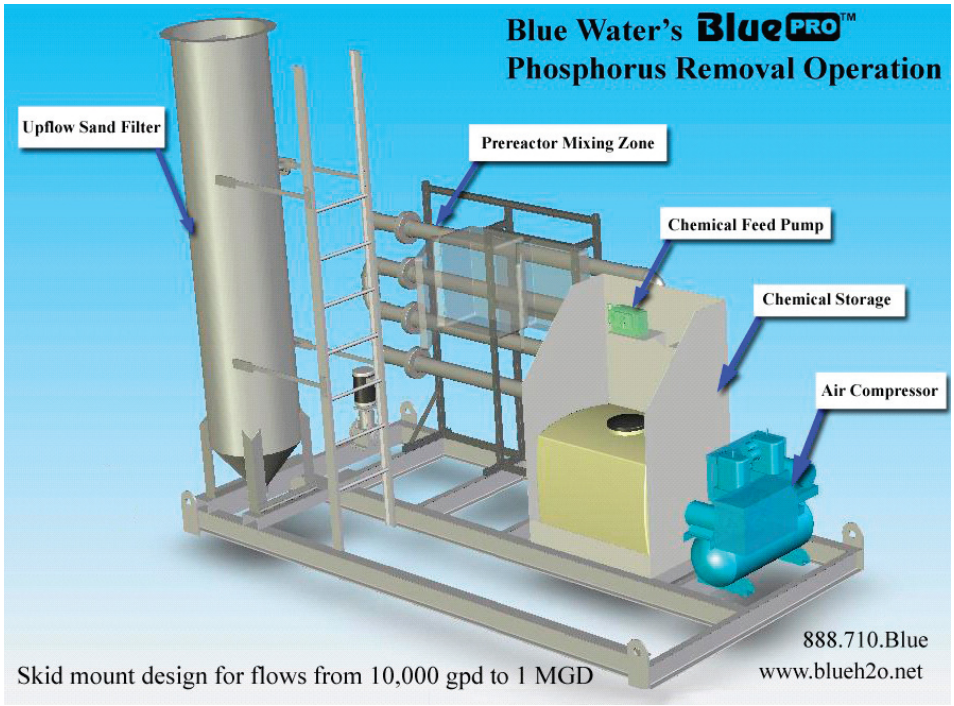

Blue Water Blue Pro™ Phosphorus Removal System
(used with permission of Blue Water Technologies)

Nutrient Removal *prepared 2012* **Technology Summary**

Phosphorus Recovery (Struvite or Calcium Phosphate Precipitation)

Objective:

Precipitation and recovery of phosphorus as a usable product.

State of Development:

Innovative.

Description:

Phosphorus recovery has become desirable as the potential for worldwide phosphorus shortage has been recognized (Bufe, 2010). Because phosphorus can be removed from wastewater in solid form only, it must either be a component of the sludge or recovered as a separate solid phase. Although several other approaches have been proposed, precipitation with crystallization has been adopted at several full-scale facilities. Effective phosphorus recovery is implemented in the high phosphorus return stream of sludge liquor from dewatering or decanting rather than in the mainstream where the phosphorus concentration is much lower. Although phosphorus recovery could be used with sludge liquor from treatment plants using metal phosphate precipitation, the process is most practical when coupled with biological phosphorus removal, which transfers much of the mainstream phosphorus to the sludge but allows a larger portion of it to be released particularly during anaerobic digestion.

Although there are several variations, the basic precipitation/crystallization process is similar. The sludge liquor is returned to an upflow fluidized bed reactor along with a chemical added to generate a precipitate. A common additive is magnesium to generate a magnesium ammonium phosphate precipitate ($MgNH_4PO_4$). Otherwise known as MAP or struvite, this precipitate occurs frequently in sludge handling systems even without supplemental magnesium. Controlled addition of magnesium and manipulation of upflow rate causes the precipitate to be efficiently formed and suspended in the flow until it grows to the desired size, at which point, it settles to the bottom of the reactor cone and is removed. The product is marketed as a fertilizer. Because MAP includes 0.45 lb N for every 1.0 lb P, struvite precipitation will also remove and recover nitrogen but to a lesser degree than phosphorus. Up to 85% P recovery has been reported by Ostara.

The Crystalactor process, developed by DHV and marketed in the United States by Procorp, has been used to precipitate calcium phosphate (generally impractical for domestic WWTP applications because of carbonate interference [IWA, 2012]) and is being applied to precipitate struvite. The product is heated dried, bagged, and is the property of the WWTP owner. Procorp will help with marketing. The Ostara Pearl process is controlled to produce pellets of 1 to 3.5 mm, which are marketed by Ostara as CrystalGreen fertilizer. The Multiform Harvest process uses a smaller reactor with no recycle to produce a raw struvite precipitate that Multiform Harvest markets after converting it to a saleable product through further off-site processing.

These phosphorus recovery processes can be combined with phosphorus release upstream of thickening equipment and anaerobic digesters to decrease uncontrolled struvite formation. The approach involves combining primary sludge with waste activated sludge from a biological phosphorus removal process under anaerobic conditions to induce phosphorus release. Ostara's WASSTRIP process is one example.

Comparison to Established Technologies:

The most common method for phosphorus removal from wastewater is by precipitation/adsorption with waste activated sludge. Biological phosphorus removal is also relatively common. Both processes result in phosphorus being transferred from the wastewater to the sludge. When the sludge is stabilized and the biosolids are land applied, the phosphorus is essentially recovered as a soil/crop nutrient. However, when the sludge is incinerated or otherwise disposed of, the phosphorus could be effectively lost, although some consideration has been given to phosphorus recovery from ash. Phosphorus recovery methods separate a large portion of the phosphorus from the sludge so that the two can be managed independently. One important benefit of phosphorus recovery technologies is that any metal ions in the sludge remain with the sludge and are not co-precipitated with the phosphorus.

Available Cost Information:

Approximate Capital Cost: Highly dependent on wastestream strength.
Approximate O&M Costs: Not available.

Nutrient Removal *prepared 2012* **Technology Summary**

Phosphorus Recovery (Struvite or Calcium Phosphate Precipitation) (cont.)

Vendor Name(s):

Procorp Enterprises (Crystalactor)
10200 Innovation Drive, Suite 500
Milwaukee, WI 53226
Telephone: 800-449-8777
Telephone: 414-258-8777
Fax: 414-258-8066
Email: eng@procorp.com
Website: www.procorp.com

Ostara Nutrient Recovery Technologies (Pearl)
690 – 1199 West Pender Street
Vancouver, BC V6E 2R1
Telephone: 604-408-6697
Fax: 604-408-4442

Multiform Harvest
2033 Sixth Ave., Suite 253
Seattle, WA 98121-2580
Telephone: 206-725-3305
Email: info@multiformharvest.com

Installation(s):

Crystalactor
Two U.S. struvite removal facilities in design/construction/startup in 2012

Pearl
Durham, OR
Suffolk, VA
York, PA
Clean Water Services
(Operating a facility with Struvite recovery since May, 2009)
Portland, OR
(Hillsboro, OR)
Madison, WI (2013 startup anticipated)

Multiform Harvest
Boise, ID
Yakima, ID

Key Words for Internet Search:

Phosphorus recovery, phosphorus precipitation, Ostara, Multiform Harvest, Crystalactor

Data Sources:

Sartorius, C., et al., “Phosphorus Recovery from Wastewater – Expert Survey on Present Use and Future Potential,” Water Environment Research, Vol. 84, No. 4, pp 313-321, 2012.

Water Environment Research Foundation, “Nutrient Recovery: State of the Knowledge,” September 2011.

Bufe, M., “Enough to Go Around? Phosphorus Shortage Concerns Spur Nutrient Recovery Technologies and Educational Efforts,” Water Engineering and Technology, Vol. 22, No. 9, pp 18-23, 2010.

International Water Association, “International Conference on Nutrient Recovery From Wastewater Streams Vancouver, 2009,” IWA Water Wiki (http://www.iwawaterwiki.org/xwiki/bin/view/Articles/NutrientRecoveryProceedings), 2012.

Le Corre, K.S., et al. “Phosphorus Recovery from Wastewater by Struvite Crystallization: A Review,” Critical Reviews in Environmental Science and Technology Vol. 39, No. 6, pp 433-477, 2009.

Britton, A., et al. “Pilot testing and economic evaluation of struvite recovery from dewatering centrate at HRSD’s Nansemond WWTP,” International Conference on Nutrient Recovery from Wastewater Streams Vancouver, 2009

Solids Removal *prepared 2012* **Technology Summary**

Compressible Media Filtration (CMF)

Objective:

Multifunction, passive, high-rate filtration for wet- and dry-weather treatment applications.

State of Development:

Innovative.

Description:

The WWETCO FlexFilter™ and Bio-FlexFilter™ use a synthetic fiber media bed that is passively compressed from the sides by the head of the incoming water. The lateral compression forms a cone-shaped porosity gradient that allows the stratification and removal of large and small particles from the top to the bottom of the media bed. The porosity gradient through the media bed, with its ability to handle heavy solids loading, gives the technology a wide range of uses. In one location at the WWTF, the filter can be used to

1. Produce a reuse quality effluent as a tertiary filter
2. Increase the organic removal capacity of the facility, and/or reduce its power consumption
3. Treat excess wet-weather flow including biological treatment, as appropriate

The first two functions are accomplished during dry weather by a portion of the filter matrix sized for their specific dual-use (Figure 1). During dry weather, part of the filter matrix acts as a tertiary filter and the remaining portion as a biofilter. The tertiary filter cells can effectively remove phosphate precipitates created by addition of metal salts. The biotreatment portion of the filter matrix can be used during dry weather to treat primary influent or primary effluent wastewater, removing both particulates and soluble BOD reducing secondary loadings (one trial showed consistent 38 percent removal, [WWETCO, 2012]) while maintaining a healthy biological population in the filter media bed for treatment of the wet-weather flow when it occurs.

The biofilter cell matrix is sized for the excess wet-weather flow and TSS conditions to generally meet secondary treatment effluent criteria. In wet weather, valves are opened or closed to direct the excess flow through a one or two-stage filter treatment train. A two-stage, wet-weather filter train is shown in Figure 2. In this case the FlexFilter primarily provides solids separation and the Bio-FlexFilter provides soluble BOD removal, optimizing the capacity of each train component. Another operation option allows the FlexFilter or a portion of it to be used in the tertiary filter mode during smaller, wet-weather events. Only during larger events would the entire filter matrix be dedicated to wet-weather treatment. When biological treatment is not required, for instance in the case of CSOs, the Bio-FlexFilter cells can be eliminated. In this case, the FlexFilter would still be applied in the same two modes shown in Figures 1 and 2 (the Bio-FlexFilter being excluded), with both filter effluents going to disinfection.

A filter cell treating wet weather or primary type solids uses the neighboring filter effluent for backwash supply. When treating a waste with low solids (primary or secondary effluent), the filter cell can use the influent water as backwash supply. Low head air scrubs the media and lifts the spent backwash into the backwash trough to waste. Backwash from the filter would normally be routed to the plant influent, backwash from the biofilter would normally be sent to solids processing. Excess biological growth is controlled with a dilute chlorine (3 mg/L) solution added to the backwash.

Compressible Media Filtration (CMF) (continued)

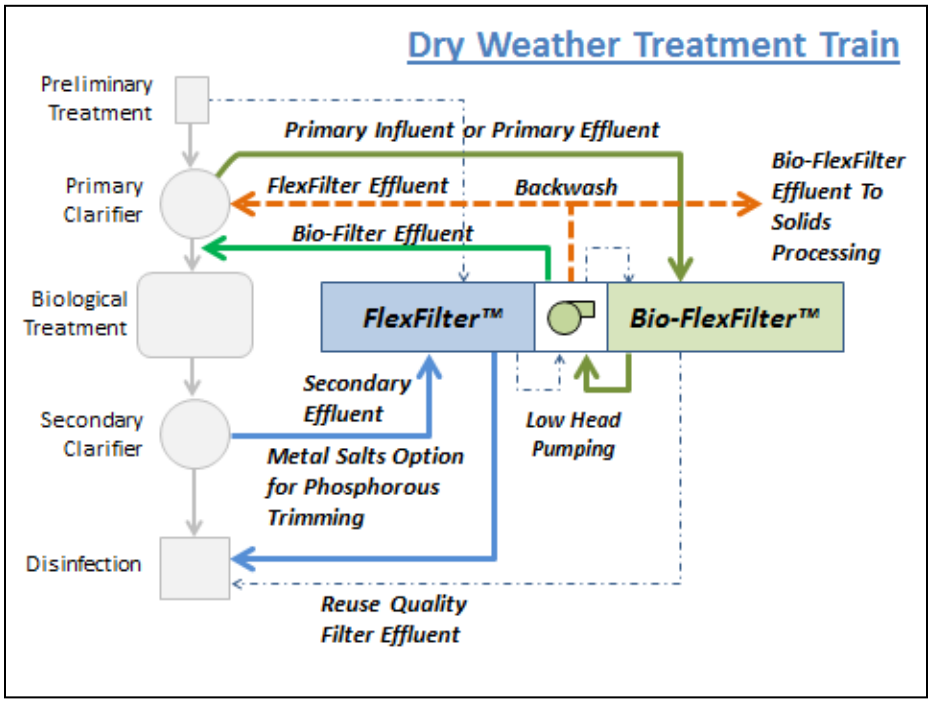

Figure 1. Dry-Weather Flow Schematic. Either filter system can be operated individually.

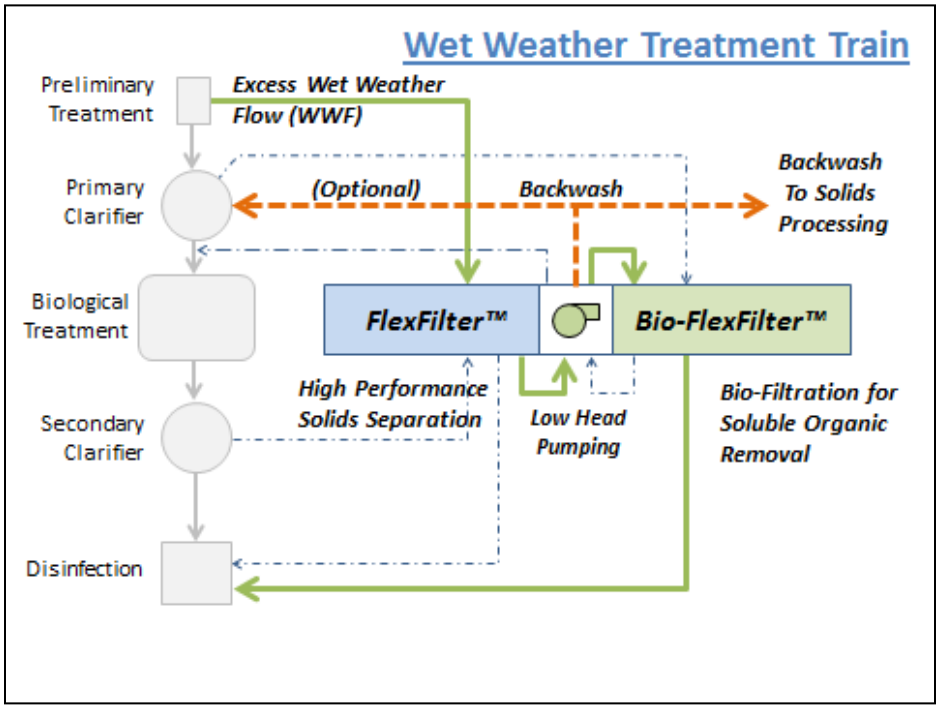

Figure 2. Wet-Weather Flow Schematic. Shows a two-stage FlexFilter/Bio-FlexFilter process train. A single-stage FlexFilter could also be appropriate for wet-weather CSO applications without biological treatment.

Solids Removal *prepared 2012* **Technology Summary**

Compressible Media Filtration (CMF) (continued)

The passively operated matrix of the FlexFilter cells works with simple flow and level logic controls, open-close valves, and a low-head blower for cleaning and pumping the spent backwash water to waste. The multifunction filter makes this technology very attractive for satisfying current and future regulatory mandates for phosphorous control, excess wet-weather treatment and as an intermediate wastewater treatment step to reduce overall plant energy consumption and/or increase plant organic treatment capacity. A trial in Atlanta (McKern, 2004), showed that the FlexFilter is suitable for removal of TSS from raw CSO flow (75% to 94%) and sedimentation basin effluent (35%). The Bio-FlexFilter is suitable for meeting secondary treatment effluent criteria for CBOD5 and TSS (effluent less than 30 mg/L each) for wet-weather flows (WWETCO 2012).

Sizing of the filter matrix is a function of hydraulic and solids loading and the available head. Peak hydraulic loading rates (HLRs) range from 10 to 20 gpm/sq ft, with the lower end for high-strength wastewaters like CSOs and primary influent sewage. The higher HLR would apply to the more dilute solids concentrations such as from a tertiary filter or dilute wet weather. Chemically assisted phosphorous removal HLR is 5 to 10 gpm/sq ft, depending on the concentration of metal salt/soluble phosphorous precipitate required. For CSO or primary influent applications, the footprint of the concrete filter structure (10 MGD) including influent/effluent channels and operating and backwashing cell chambers would be less than 210 sq ft per MGD (WWETCO, 2012). A smaller footprint would be used for SSO or tertiary applications. The filter system footprint above 10 MGD decreases with increasing flows. Also according to the manufacturer, the filter matrix footprint without the peripheral concrete channels and chambers can be reduced by about one-third using influent and effluent piping. The depth of the typical high solids filter is about 14 feet. Steel tank tertiary filters are 10 feet tall. Existing filter basins at 6- and 7-foot depths can be retrofitted.

Comparison to Established Technologies:

According to Frank and Smith (2006) the WWETCO FlexFilter technology provided comparable effluent TSS (49 mg/L to 52 mg/L) with the ballasted flocculation systems in side-by-side testing. However, ballasted flocculation requires flocculation chemicals and ramp-up time (15 to 30 minutes) to achieve performance objectives. The WWETCO FlexFilter can meet similar or better TSS removals, requires no chemicals, and immediately achieves performance objectives. The FlexFilter starts dry and ends dry without odor issues, without special startup protocols, and without special attention to mechanical equipment. Although the WWETCO filter footprint is generally somewhat larger than the footprint for ballasted sedimentation, it is roughly half as deep. FlexFilter throughput for tertiary filtration is in the order of 98 percent (WWETCO, 2012). Average throughput for CSO is about 95 percent (< 5% backwash per McKern, 2004). The throughput for chemically assisted phosphorous filtration and biofiltration is in the order of 85 to 90 percent (WWETCO, 2012).

Available Cost Information:

Approximate Capital Cost: Equipment includes the filter media bed (all internal structural metals, media, compression bladder, air diffuser), complete controls, valves/gates and actuators and blower package with redundancy. Equipment costs vary with the scale of the facility. Smaller flows will result in greater redundancy because of the minimum size of the equipment. Costs decrease with increasing flows above 10 MGD. Equipment costs for the 10-MGD filter matrix can be generalized as follows:

Application	Estimated equipment cost ($ per gallon capacity)
Tertiary filter	Less than $0.06
SSO and primary effluent	Less than $0.07
CSO and influent	Less than $0.09

Approximate O&M Costs: Operation costs are summarized as follows (WWETCO, 2012):

1. Tertiary filtration – 10 kW per MGD treated (20 mg/L TSS influent)
2. SSO or primary effluent - 35 kW per MGD treated (100 mg/L TSS influent)
3. CSO or primary influent - 60 kW per MGD treated (200 mg/L TSS influent)

Solids Removal *prepared 2012* **Technology Summary**

Compressible Media Filtration (CMF) (continued)

Vendor Name(s):

WWETCO, LLC
152 Hickory Springs Industrial Dr.
Canton, GA 30115
Telephone: 404-307-5731
Email: info@westech-inc.com
Web site: http:/www.wwetco.com

Installation(s):

FlexFilter
Columbus, GA
Heard County Water Authority, Franklin, GA
Lamar, MO
Springfield, OH (2012)

Bio-FlexFilter
Manila, Philippines

Key Words for Internet Search:

Wet weather filtration, CSO, SSO, bio-filtration, enhanced primary filtration, intermediate wastewater treatment, roughing filter, HRT, phosphorus removal, tertiary filtration, compressed media filter

Data Sources:

Arnett, C.A., et al., “Bacteria TMDL Solution To Protect Public Health And Delisting Process in Columbus, GA,” WEFTEC, 2006.

Frank, D.A., and T.F. Smith III, “Side by Side by Side, The Evaluation of Three High Rate Process Technologies for Wet Weather Treatment,” WEFTEC, 2006.

McKern, R. et al., “Atlanta CSO Pilot Plant Performance Results,” WEFTEC, 2004.

WERF, Peer Review: Wet Weather Demonstration Project in Columbus, Georgia, Co-published: Water Environment Research Foundation, Alexandria, VA, and IWA Publishing, London, U.K., 2003.

WWETCO, Boner, M., personal communication, 2012.

Solids Removal *updated 2012* **Technology Summary**

Magnetite Ballasted Sedimentation

Objective:

Ballasted sedimentation process for enhanced removal of suspended solids. Used for tertiary treatment (including phosphorus solids removal) or high-rate treatment of overflows.

State of Development:

Innovative.

Description:

The CoMag™ process uses conventional chemical coagulation and flocculation along with the addition of finely ground magnetite as a ballasting agent. The dense magnetite significantly increases the weight and settleability of chemical flocs, resulting in high-rate sedimentation. Approximately 85 percent of the settled sludge is recycled (similar to the solids contact process) to provide nucleation sites for floc development. Excess sludge is passed through a shear mill followed by a magnetic recovery drum to recover the magnetite before the nearly magnetite-free sludge is further processed. The recovered magnetite is returned to the process. BioMag™ is a similar process using magnetite addition directly to the activated sludge process to improve biological floc settleability. For more information, see the BioMag™ technology description in Chapter 3, Biological Treatment Processes. The Sirofloc process is similar to CoMag™ but involves an initial magnetite activation step and has been used to treat raw wastewater overflows.

Comparison to Established Technologies:

Magnetite is denser than suspended solids and sand, and it generates heavy, dense floc that settles rapidly. This allows otherwise ordinary clarifiers to be loaded at higher than typical rates while maintaining high-quality effluent. The footprint of clarifiers used with the CoMag™ process is correspondingly small (although an additional small area is required to house the magnetite recovery drum and magnetite supply). The magnetite seed is recovered from sludge using a magnet instead of gravity, so recovery efficiency is high, and magnetite make-up requirements are low. As with other processes employed to chemically precipitate phosphorus, precipitation performance is limited by kinetic and stoichiometric factors. However, the nucleation, solids contact and ballast provided by the CoMag™ process combine to allow phosphorus precipitates to be removed very effectively once they are formed.

Available Cost Information:

Approximate Capital Cost: Not disclosed by the vendor.
Approximate O&M Costs: Not disclosed by the vendor.

Vendor Name(s):

CoMag™ – Siemens Industry, Inc.
Water Technologies
Telephone: 866-926-8420 or 724-772-1402
Web: www.water.siemens.com

Sirofloc – CSIRO
Locked Bag 10
Clayton South VIC 3169
Australia
Telephone: +61-3-9545-2176
Fax: +61-3-9545-2175
Email: enquiries@csiro.au

Installation(s):

CoMag™
Concord, MA
Billerica, MA
Maynard, MA
Charlton, MA
Sturbridge, MA

Sirofloc
Malabar STP, New South Wales, Australia
No installations are in the United States

Key Words for Internet Search:

Siemens CoMag, ballasted sedimentation, ballasted clarification, Concord WWTP, Sirofloc

Magnetite Ballasted Sedimentation (continued)

Data Sources:

Siemens, www.water.siemens.com

Ellis, E.P, and A.H. Cathcart, "Selection, Installation, Startup and Testing of the World's First Full-Scale CoMag Phosphorus Reduction Tertiary Treatment System," Proceedings WEFTEC 2008.

Tozer, H.G., "Study of Five Phosphorus Removal Processes Select CoMag™ to Meet Concord, Massachusetts' Stringent New Limits," Proceedings WEF Nutrient Removal, 2007.

Akyel, G., et al., "Rapid Sewage Clarification Using Magnetite Particles," Proceedings of the 15th Federal Convention of the Australian Water and Wastewater Association, 1993.

Booker, N.A., et al., "Novel High Rate Processes for Sewer Overflow Treatment," Water Science and Technology," Vol. 34, No. 3-4, pp. 103-109, 1996.

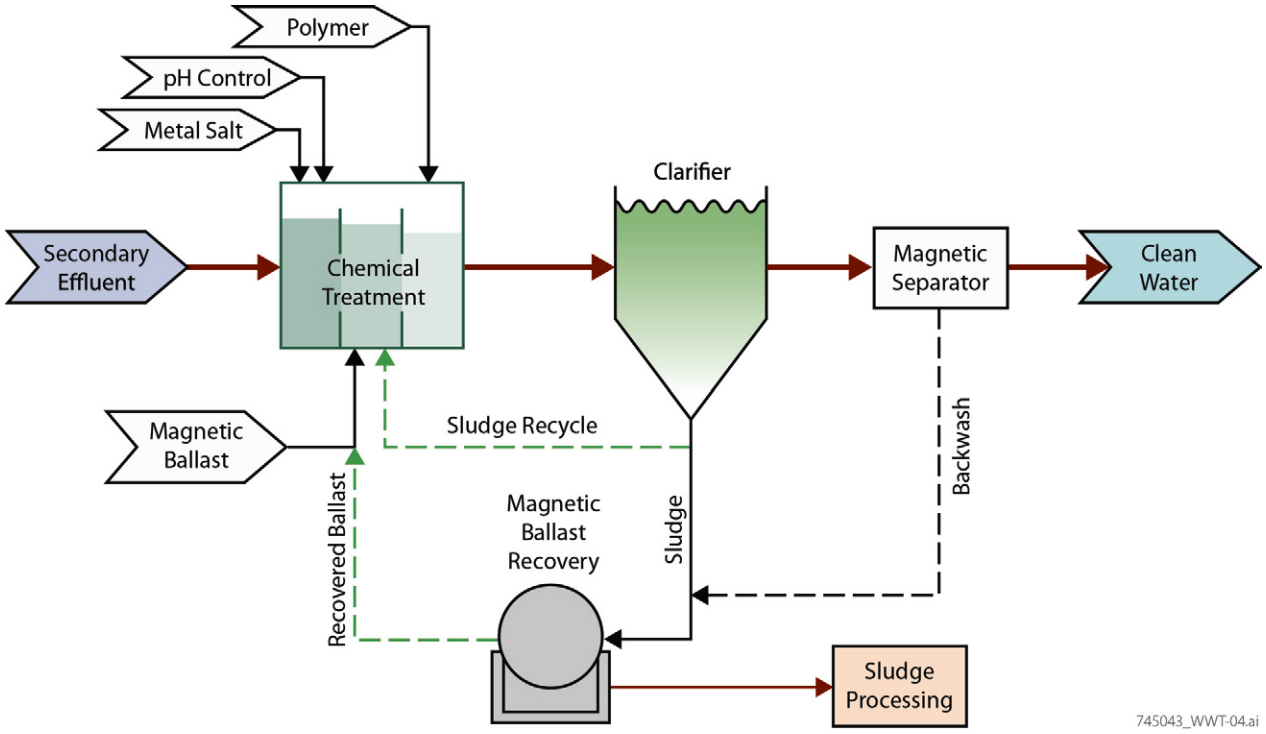

CoMag™ Process Flow Diagram

Solids Removal *prepared 2012* **Technology Summary**

Multi-stage Filtration

Objective:

Very efficient removal of solids that contain phosphorus and nitrogen, allowing compliance with stringent nutrient limits.

State of Development:

Innovative.

Description:

Very low limits on nutrients are difficult to meet without achieving very low effluent solids concentrations. Biomass solids are typically 8 to 10 percent nitrogen and 1 to 2 percent phosphorus by mass (Grady et al, 2011). If enhanced biological phosphorus removal is performed, the phosphorus content of the biomass can be increased to 6 to 8 percent (Grady et al, 2011). If chemical phosphorus removal is done, the metal phosphate precipitate (some of it colloidal) will have a substantial total phosphorus component. Therefore, although the discharge permit might allow 10, 20, or 30 mg/L total suspended solids, significantly lower total suspended solids could be required to meet the nutrient limits. Implementing filtration in series with a first-stage filter or first-stage clarifier and chemical addition between stages allows the finer colloidal particles that escape the first solids separation stage to be targeted. Some example systems that have shown good phosphorus removal performance are Trident HS, DynaSand D2, and BluePRO™. Trident HS uses a tube clarifier first stage followed by an adsorption clarifier and mixed media or upflow, moving-bed filter final stage. The Trident HS has been shown to achieve effluent total phosphorus of 0.02 mg/L (Liu, 2010). The DynaSand D2 uses two continuous-backwash, upflow-sand filters with a lamella settler applied on the backwash. Using chemical phosphorus removal, DyanSand D2 has achieved 0.01 mg/L average total phosphorus (Liu, 2010). The BluePRO™ is a continuous-backwash, upflow-sand filter with adsorption media and can be used in series to achieve very low effluent solids levels. With two-stage BluePRO™, the WWTP at Hayden, Idaho, achieves total phosphorus between 0.009 and 0.018 mg/L (Leaf, 2007).

Comparison to Established Technologies:

Multistage filtration provides effluent solids quality better than single-stage sedimentation or filtration and approaching that provided by microfiltration membrane systems.

Available Cost Information:

Approximate Capital Cost: Equipment cost vary with technology and performance requirements
Approximate O&M Costs: Operating costs include pumping.

Vendor Name(s):

Parkson – DynaSand
1401 West Cypress Creek Rd
Fort Lauderdale, FL 33309-1969
Telephone: 1-888-PARKSON
Fax: 954-974-6182
Email: technology@parkson.com
Web site: www.parkson.com

Blue Water Technologies, Inc.
10450 North Airport Drive
Hayden, ID 83835
Telephone: 888-710-2583
Fax: 208-209-0396
Web site: http://www.blueH2O.net

Siemens Industry, Inc. – Trident HS
Water Technologies
Telephone: 866-926-8420 or 724-772-1402
Web: www.water.siemens.com

Installation(s):

DyanSand D2
Manotick, ON
Stamford, NY
Walton, NY

BluePRO™
Hayden, ID

Trident HS
Couer d'Alene, ID

Solids Removal *prepared 2012* **Technology Summary**

Multi-stage Filtration (continued)

Key Words for Internet Search:

DyanSand, BluePro, Trident HS, wastewater filtration

Data Sources:

Grady, CPL Jr. et al., Biological Wastewater Treatment, IWA Publishing and CRC Press, Taylor and Francis Group, Boca Raton FL, 2011.

WEF Nutrient Removal Task Force, Nutrient Removal, WEF Manual of Practice No. 34, WEF Press, Alexandria VA, 2010.

Liu, I., et al., "Comparison of Phosphorus Fractionation in Effluents from Different Wastewater Treatment Processes," WEFTEC Proceedings, 2010.

Benisch, M., et al., "Can Tertiary Phosphorus Removal Reliably Produce 10 µg/L?," WEF Nutrient Removal Conference Proceedings, 2007.

Leaf, W., et al., "Total Phosphorus Removal to Low Levels Through Tertiary Reactive Filtration," WEFTEC Proceedings, 2007.

Solids Removal *updated 2012* **Technology Summary**

Nanofiltration (NF) and Reverse Osmosis (RO)

Objective:

NF and RO are membrane processes that can be used to remove recalcitrant compounds that otherwise contribute organic carbon, nitrogen, and phosphorus, to reduce total dissolved solids, and to remove viruses.

State of Development:

Innovative.

Description:

Tertiary membrane filtration for advanced treatment of secondary effluent can be accomplished using NF or RO. Typical characteristics for each are

Characteristic	NF	RO
Pore size range	0.001–0.01 micrometers	0.0001–0.001 micrometers
Molecular weight cutoff	200–400 Daltons	100–200 Daltons
Operating pressure	70–120 psig	125–300 psig

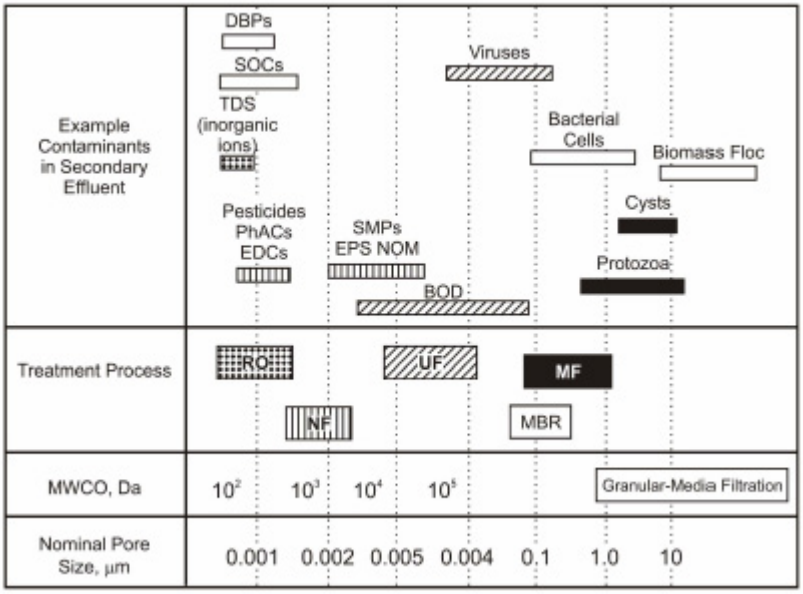

NF and RO Treatment Process Characteristics

RO operates by high-pressure diffusion of solutes through the membrane; NF uses both diffusion and sieving action. NF removes many of the same organic compounds that would be targeted with RO but allows more of the inorganic material to remain. Both processes are used for removing priority organic pollutants, recalcitrant organics, bacteria, and viruses. Recently, NF and RO have been considered as technology to achieve low levels of total nitrogen. However, recent research (Merlo et al. 2012) has determined that even RO does not consistently achieve total nitrogen levels less than 1.0 mg/L. Both are useful for removing pesticides, pharmaceuticals, hormones, and other micro-constituents.

NF and RO are primarily used where water reuse is the treatment goal. Typically, microfiltration or ultrafiltration is used as a pretreatment process for water that is required to be treated through NF or RO. The membranes are typically made of cellulose acetate or aromatic polyamides and are spiral wound and hollow fiber. NF is operated at lower pressures, so it uses less energy than RO. Both require membrane replacement as trans-membrane pressure increases from fouling.

Solids Removal *updated 2012* **Technology Summary**

Nanofiltration (NF) and Reverse Osmosis (RO) (continued)

Comparison to Established Technologies:

Microfiltration and ultrafiltration membranes are used for membrane bioreactors where the membrane is in direct contact with the high solids mixed liquor. These membranes provide excellent removal of particulate and colloidal material but cannot remove dissolved constituents as can NF and RO. NF and RO remove total suspended solids, total dissolved solids, and other pathogens better than the ultrafiltration process.

Available Cost Information:

Approximate Capital Cost: Not available.
Approximate O&M Costs: Not available.

Vendor Name(s):

Nitto Denko – Hydranautics
401 Jones Rd
Oceanside, CA 92058
Telephone: 760-901-2500
Fax: 760-901-2578
Email: info@hydranautics.com

GE Infrastructure Water and Process Technologies
4636 Somerton Rd
Trevose, PA 19053
Telephone: 215-355-3300
Web site: www.gewater.com

Koch Membrane Systems, Inc.
850 Main St
Wilmington, MA 01887
Telephone: 888-677-5624
Email: info@kochmembrane.com

Siemens Industry, Inc.
Water Technologies
Telephone: 866-926-8420 or 724-772-1402
Web: www.water.siemens.com

Installation(s):

Full-scale U.S. installations:

- Carlsbad, CA
- Carson, CA
- Cerritos, CA
- Chandler, AZ
- Dublin/San Ramon, CA
- El Segundo, CA
- Eva Beach, HI
- Fountain Valley, CA
- Harlingen, TX
- Ky Colony Beach, FL
- Livermore, CA
- Long Beach, CA
- Los Angeles, CA
- Miami, FL
- Santa Maria, CA
- Scottsdale, AZ
- State College, PA
- Torrance, CA

Key Words for Internet Search:

Nanofiltration, NF, wastewater treatment, reverse osmosis, RO, membranes

Data Sources:

Merlo, R., et al., “Analysis of Organic Nitrogen Removal in Municipal Wastewater by Reverse Osmosis,” Water Environment Research, Vol. 84, No. 7, pp. 588–595, 2012.

Reardon, R.D., et al., “Membrane Treatment of Secondary Effluent for Subsequent Use: Phase 2 – Pilot Plant Comparisons of MF and UF for Pretreatment of High Pressure Membranes,” Water Environment Research Foundation Report No. 01-CTS-6a, 2007.

Reardon, R.D., et al., “Membrane Treatment of Secondary Effluent for Subsequent Use,” Water Environment Research Foundation Report No. 01-CTS-6, 2005.

Metcalf and Eddy, Wastewater Engineering Treatment and Reuse, 4th ed., 2003.

Disinfection *updated 2012* **Technology Summary**

Microwave Ultraviolet (UV) Disinfection

Objective:

Precipitation and recovery of phosphorus as a usable product.

State of Development:

Adaptive Use.

Description:

UV disinfection transfers electromagnetic energy from a mercury arc lamp to wastewater. Electromagnetic radiation, between the ranges of 100 to 400 nm (UV range), penetrates bacterial cells, and works as a bactericide. Typical mercury vapor UV lamps contain electrodes that facilitate the generation of UV radiation by striking an electric arc. These electrodes are delicate and their deterioration is the primary source of failure in UV disinfection systems. Microwave UV disinfection technology eliminates the need for electrodes by using microwave-powered, electrodeless, mercury UV lamps. In this technology, microwave energy is generated by magnetrons and directed through wave guides into quartz lamp sleeves containing argon gas. The directed microwave energy excites the argon atoms, which in turn excite the mercury atoms to produce radiation as they return from excited states to lower energy states, as is the case with other mercury UV lamps. Electrodeless lamps operate at low pressure, which reduces safety risks and increases lamp life. Microwave UV lamps allow greater flexibility for variations in parameters such as lamp diameter, operating pressures, and fill materials because of the absence of electrodes. This allows for greater optimization of radiation at specific wavelength regions. The intensity of the radiation increases when the applied microwave power is increased. Microwave UV disinfection systems are available in modular, open-channel, and closed-vessel designs.

Comparison to Established Technologies:

Microwave UV disinfection systems use low-pressure, high-output electrodeless lamps to optimize UV output at 254 nm (the same wavelength targeted by standard UV disinfection systems). The electrodeless lamps warm up quickly and are capable of disinfection within 12 seconds compared to startup times of 20 seconds to 3 minutes for electrode lamps. Eliminating the electrode from the lamp eliminates the primary deterioration process associated with UV lamps, resulting in a lamp life approximately three times that of electrode lamps. Lamp aging, the phenomenon by which the output of UV lamps steadily decreases with lamp age is not a factor with microwave UV lamps. The lamp has a very low residual radiation of energy, thus almost instant shutoff capability, which prevents overheating heat-sensitive materials near the lamps. The improved warm up and shutoff response capability provide additional opportunity for effective flow pacing control to match UV dose to operating conditions in real time. This reduces energy consumption without reducing lamp life. Radiation is produced through the entire length of the lamp, and no energy loss occurs as is associated with electrodes. The electrodeless lamp system has more components than the conventional electrode system, including the magnetron, wave guides, and cooling fans. Magnetron life is limited and requires replacement. Magnetrons usually are warranted for up to 10,000 hours of operation. Lamps are typically warranted for 3 years.

Available Cost Information:

Approximate Capital Cost: Not disclosed by the vendor.
Approximate O&M Costs: Not disclosed by the vendor.

Vendor Name(s):

Severn Trent Services – Microdynamics
3000 Advance Ln
Colmar, PA 18915
Telephone: 215-997-4000
Fax: 215-997-4062
Email: info@severntrentservices.com
Web site: www.severntrentservices.com

Installation(s):

Blairsville WWTP, PA
Dow Chemicals, TX
Kent County, DE
Kingsport WWTP, TN
Leacock WWTP, PA
Mandeville WWTP, LA
Montevallo WWTP, AL
Mt. Signal WWTP, Seeley County, CA

Disinfection *updated 2012* **Technology Summary**

Microwave Ultraviolet (UV) Disinfection (continued)

Key Words for Internet Search:

Microwave UV disinfection, electrodeless UV lamps

Data Sources:

Meera, V., et al., "Microwave UV Comes to Texas," WEFTEC Proceedings, 2010.

Black and Veatch Corporation, "White's Handbook of Chlorination and Alternative Disinfectants," 5th ed., Wiley, 2010.

Newton, J., "Disinfection Utilizing an Innovative Microwave UV System," WEFTEC Proceedings, 2009.

Gutierrez, R.L., et al., "Microwave UV – A New Wave of Tertiary Disinfection," WEFTEC Proceedings, 2006.

Microwave UV Technology, a Presentation by MicroDynamics™, Severn Trent Services.

Vendor-supplied information.

Solids Removal *prepared 2008* **Technology Summary**

Actiflo® Process

Objective:

Treatment of primary and tertiary effluents.

State of Development:

Adaptive Use.

Description:

The Actiflo® process is a high-rate chemical and physical clarification process that involves the formation of suspended solids onto a ballast particle (microsand) followed by lamellar settling. It is considered an established process for the treatment of wet weather flows, but is also being applied to primary and tertiary effluents. The process starts with the addition of a coagulant to destabilize suspended solids. The flow enters the coagulation tank for flash mixing to allow the coagulant to take effect then overflows into the injection tank where microsand is added. The microsand serves as a "seed" for floc formation, providing a large surface area for suspended solids to bond to and is the key to Actiflo®. It allows solids to settle out more quickly, thereby requiring a smaller footprint than conventional clarification.

Polymers may either be added in the injection tank or at the next step, the maturation tank. Mixing is slower in the maturation tank, allowing the polymer to help bond the microsand to the destabilized suspended solids. Finally, the settling tank effectively removes the floc with help from plate settlers allowing the tank size to be further reduced. Clarified water exits the process by overflowing weirs above the plate settlers. The sand and sludge mixture is collected at the bottom of the settling tank with a conventional scraper system and pumped to a hydrocyclone, located above the injection tank. The hydrocyclone converts the pumping energy into centrifugal forces to separate the higher density sand from the lower density sludge. The sludge is discharged out of the top of the hydrocyclone while the sand is recycled back into the Actiflo® process for further use. Screening is required upstream of Actiflo® so that particles larger than 3 to 6 mm do not clog the hydrocyclone.

Several startup modes may be used for a full scale Actiflo® system. If a wet weather event is expected within 7 days of a previous wet weather event, the units should be shut down, but not put on standby. Wastewater would remain in the tanks and a wet startup would ensue at the time of the next wet weather event. In summer months, when freezing is not possible, the intermittent flush standby mode could be used; and when freezing is possible, the continuous flush standby mode should be used. These standby modes should results in a successful wet method, dry startup. (See also "BioActiflo®" process, Chapter 4.)

Comparison to Established Technologies:

Fundamentally, this process is very similar to conventional coagulation, flocculation, and sedimentation water treatment technology. Both processes use coagulant for the destabilization and flocculent aid (polymer) for the aggregation of suspended materials. These materials are then subsequently removed by settling for disposal. The primary technical advance made in the Actiflo® process is the addition of microsand as a "seed" and ballast for the formation of high-density flocs that have a relatively high-density microsand nucleus and are easily removed by settling. Chemical phosphorus removal is limited by kinetic factors as well as stoichiometric factors and excessive inorganic precipitant requirements need to be reduced.

Available Cost Information:

Approximate Capital Cost: Not disclosed by vendor.
Approximate O&M Costs: Not disclosed by vendor.

Vendor Name(s):

Kruger USA
401 Harrison Oaks Blvd., Suite 100
Cary, NC 27513
Telephone: 919-677-8310
Fax: 919-677-0082
Email: krugerincmarketing@veoliawater.com
Web site: http://www.krugerusa.com

Installation(s):

City of Greenfield, IN
Lincolnton, NC
Lawrence WWTP, IN
Williamette WTP, OR
Fort Worth, TX

Solids Removal *prepared 2008* **Technology Summary**

Actiflo® Process (continued)

Key Words for Internet Search:

Actiflo®, Ballasted High Rate Clarification, BHRC

Data Sources:

Web site owned by Kruger USA.

Keller, John, et al., "Actiflo®: A Year's Worth of Operating Experience from the Largest SSO System in the U.S.," Water Environment Federation's Annual Technical Exhibition and Conference (WEFTEC), 2005.

Ponist, Jeffrey B., David Scheiter, "Ballasted High Rate Clarification Process Removes City of Greenfield, Indiana as a CSO Community."

Sigmund, Thomas, et al., "Operating Chemically Enhanced Clarification for Optimum Disinfection Performance," WEFTEC, 2006.

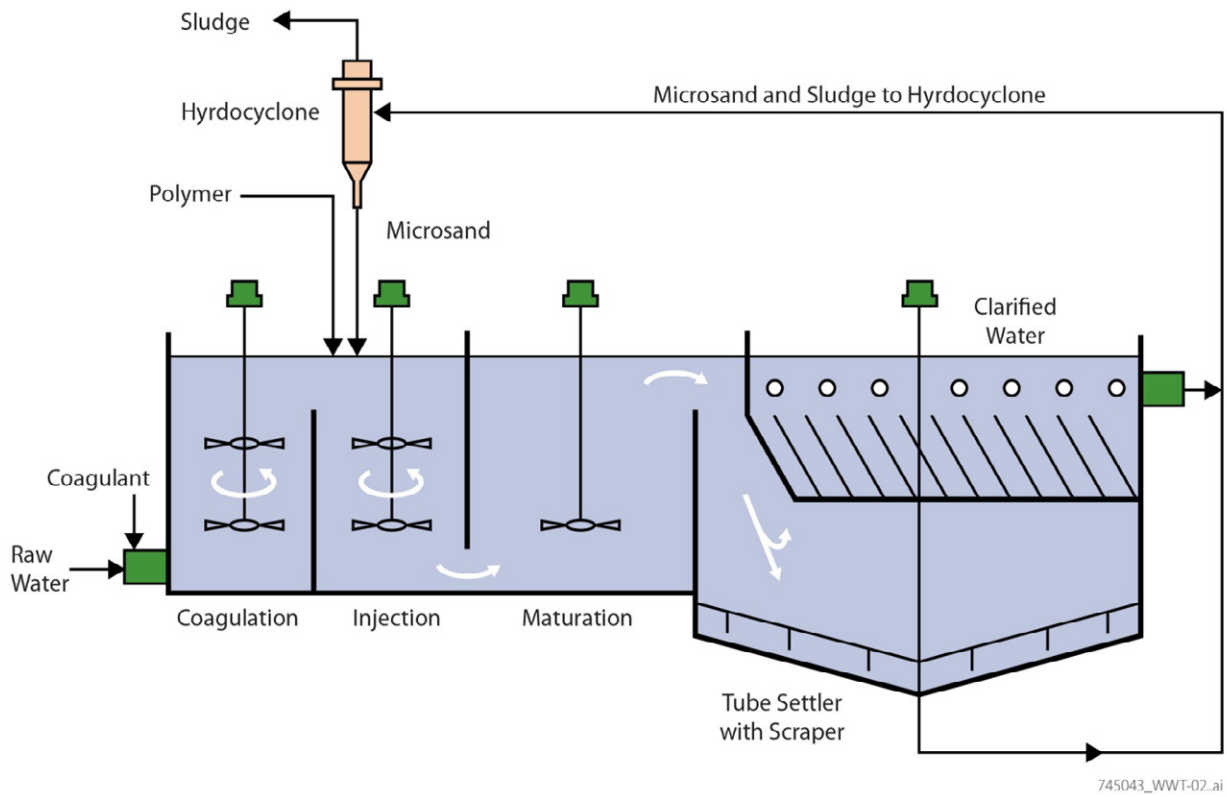

Actiflo® Process Diagram

Solids Removal *prepared 2008* **Technology Summary**

DensaDeg® Process

Objective:

Treatment of primary and tertiary effluents and wet weather flows.

State of Development:

Adaptive Use.

Description:

The DensaDeg® process is a high-rate chemical and physical clarification process that combines sludge ballasted clarification and lamellar filtration, both established processes. The DensaDeg® process starts with the addition of a coagulant to destabilize suspended solids. The flow enters the rapid-mix tank for flash mixing to allow the coagulant to take effect then overflows into the reactor tank where sludge and polymer are added. A draft tube and mixer in the reactor allow for thorough mixing of the wastewater with the recirculated sludge and added chemicals. The sludge serves as a "seed" for floc formation providing a large surface area for suspended solids to bond to and is the key to DensaDeg®, allowing solids to settle out more quickly, thereby requiring a smaller footprint than conventional clarification.

Wastewater flows over a weir from the reactor tank through a transition zone before entering the clarifier. The clarifier effectively removes the flow with help from settling tubes, allowing the tank size to be further reduced. Clarified water exits the process by overflowing weirs above the settling tubes. Sludge is collected at the bottom of the clarifier with a conventional scraper system and recirculated back to the reactor tank. Periodically, a separate sludge pump energizes and wastes a small portion of the sludge from the system. Scum is removed from the process at the top of the transition zone by a cylindrical collector that automatically rotates periodically.

Several startup modes may be used for a full-scale DensaDeg®. If a wet weather event is expected within 6 hours of a previous wet weather event, the units should be shut down, but not drained. After 6 hours, the units may be drained except for three feet of depth in the clarifier. Both of these scenarios, which would include keeping the sludge collector running while the system is idle, would maintain a sludge inventory and a wet startup would ensue at the time of the next wet weather event. After 12 hours the tanks should be completely drained to prepare for a dry startup.

Comparison to Established Technologies:

Fundamentally, this process is very similar to conventional coagulation, flocculation, and sedimentation treatment technology. Both processes use coagulant for the destabilization and flocculent aid (polymer) for the aggregation of suspended materials. These materials are then subsequently removed by settling for disposal. The primary technical advance made in the DensaDeg® process is the recirculated sludge as a "seed" for the formation of high-density flocs for easy removal by settling. Chemical phosphorus removal is limited by kinetic factors as well as stoichiometric factors, and excessive inorganic precipitant requirements need to be reduced.

Available Cost Information:

Approximate Capital Cost: Cost estimates are dependent upon local requirements and specific applications.
Approximate O&M Costs: Cost savings are linked to the relative ease of installation, operational flexibility, and low-energy consumption.

Vendor Name(s):

Infilco Degremont Inc.
P.O. Box 71390
Richmond, VA 23255-1930
Telephone: 804-756-7600
Web site: http://www.infilcodegremont.com

Installation(s):

Turlock, CA
Gainsville, GA
Toledo, OH
Halifax, Nova Scotia
Shreveport, LA
Breckenridge, CO

Solids Removal *prepared 2008* **Technology Summary**

DensaDeg® Process (continued)

Key Words for Internet Search:

DensaDeg®, High Rate Clarification, HRC

Data Sources:

Web site owned by Infilco Degremont.

http://www.infilcodegremont.com/separations_4.html

Sigmund, Thomas, et al., "Operating Chemically enhanced Clarification for Optimum Disinfection Performance," WEFTEC, 2006.

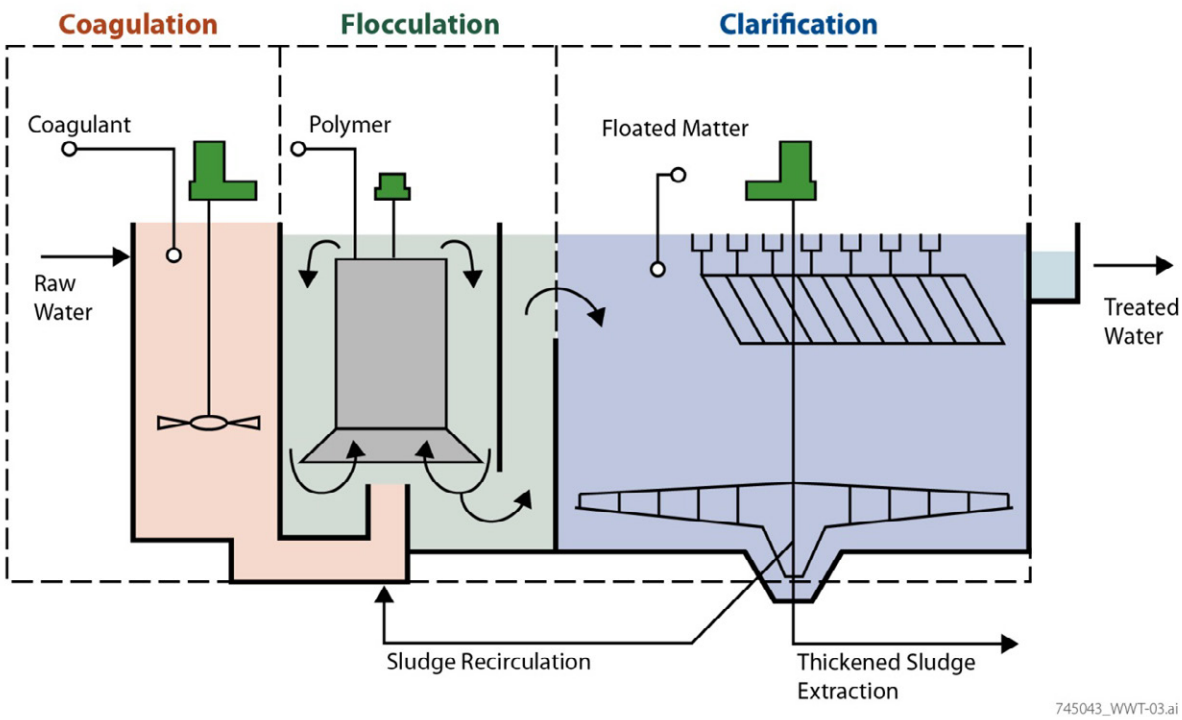

Process Diagram of the DensaDeg® High-Rate Clarifier and Thickener

Disinfection *updated 2012* **Technology Summary**

Alternative Disinfectants [Peracetic Acid (PAA) and BCDMH]

Objective:

Alternatives to chlorine disinfection using disinfection products such as peracetic acid (PAA, also known as peroxyacetic acid [CH3CO3H]), or Bromo Chloro Dimethylhydantoin (1-Bromo-3-Chloro-5,5 Dimethylhydantoin [BCDMH]).

State of Development:

Emerging.

Description:

Alternative disinfectants are being applied to wet-weather flows because of their ability to act as high-rate disinfectant. PAA is a stronger oxidant than hypochlorite or chlorine dioxide but not as strong as ozone. In parts of Europe and Canada where chlorine is not used because of the potential to form disinfection by-products. PAA is an oxidizing agent used as a routine wastewater disinfectant. PAA does not affect effluent toxicity, so need not be removed as with chlorine. Recently approved by EPA specifically as a wastewater disinfectant (Proxitane WW-12), PAA is a clear, colorless liquid available at a concentration of 12 to 15 percent. With stabilizers to prevent degradation in storage it exhibits less than 1 percent decrease in activity per year. At the 12 percent concentration, its freezing point is approximately –40 °C. Although it is explosive at high concentrations, at 15 percent or less, PAA does not explode. The solution is acidic (pH 2) and requires care in handling, transport, and storage. PAA has been used successfully in combination with UV disinfection, allowing reductions in lamp intensity and less frequent lamp cleaning. It is available in totes or in bulk, should be stored near the point of application, and should be well mixed where it is introduced. The dosage used for disinfecting secondary effluent depends on the target organism, the water quality, and the level of inactivation required. For example, a dosage of 5 mg/L 15 percent PAA, with contact time of 20 minutes, can reduce fecal and total coliform by 4 to 5 logs in secondary effluent (Morris 1993). Dosage of 1–2 mg/L PAA is typical for secondary effluents. Note, however, that PAA is less effective for inactivation of spores, viruses, and protozoa including Giardia and Cryptosporidium (Koivunen et al. 2005; Liberti and Notarnicola 1999).

BCDMH is a chemical disinfectant used to treat drinking water. It is a crystalline substance, insoluble in water, but soluble in acetone. It reacts slowly with water, releasing hypochlorous acid and hypobromous acid. EBARA has devised a system to liquefy the BCDMH powder in a mixer with an injection device. The solution is injected directly into the wastewater, and it relies on the turbulence of the process to mix into the disinfection process.

Comparison to Established Technologies:

Compared to disinfection with chlorine compounds, PAA does not form harmful by-products after reacting with wastewater when using dosages typical for secondary effluent. For example, during the trial at St. Augustine (Keough and Tran 2011), an average PAA dose of 1.5 mg/L provided similar fecal coliform reduction as a 7 mg/L chlorine dose (both meeting the 200 cfu/00 mL limit), but the chlorine resulted in 170 µg/L total THM compared to 0.6 µg/L TTHM for PAA. With tertiary treatment, PAA can meet limits of less than 10 cfu/mL but achieving very low (less than 2 cfu/100 mL) fecal coliform limits required high PAA doses (Leong et al. 2008). However, a residual of acetic acid could be present and might exert an oxygen demand or provide substrate for bacterial regrowth. Dosages and contact times are no more than required for disinfection with chlorine, so existing contact tanks should be adequate for conversion to PAA.

BCDMH has a small footprint and is easier to store than chlorine disinfection products. The feed stock is BCDMH powder, which is liquefied as needed by feeding through a dissolution mixer with clean water to form a solution that is injected into the wastewater. The BCDMH powder is reportedly highly stable, with a shelf life of longer than one year, making it potentially attractive for use in CSO applications that are characterized by intermittent operation. BCDMH is an effective disinfectant that can achieving bacterial reductions comparable to sodium hypochlorite, but it acts in a shorter amount of contact time (typically 3 minutes instead of 5 minutes for sodium hypochlorite), thereby reducing the size of the contact chamber, which might result in capital cost savings. Similar to sodium hypochlorite, BCDMH also produces DBPs and disinfection residuals, potentially requiring the use of a reducing agent.

Disinfection *updated 2012* **Technology Summary**

Alternative Disinfectants [Peracetic Acid (PAA) and BCDMH] (continued)

Available Cost Information:

Approximate Capital Cost: Equipment required is similar to that used for hypochlorite systems.
Approximate O&M Costs: The cost of PAA is approximately $1.00/lb.

Vendor Name(s):

Peracetic Acid
FMC Corporation
Minh Tran
1735 Market St
Philadelphia, PA 19103
Telephone: 609-951-3180 or 267-357-1645
Email: Minh.Tran@fmc.com
Web site: http://www.microbialcontrol.fmc.com

Solvay Chemicals NA/PERAGreen Solutions
John Meakim
2900 Hungary Rd
Richmond, VA 23228
Telephone: 804-501-0845 x320
Fax: 804-501-0846
Web site: www.peragreensolutions.com

BCDMH
EBARA Engineering Service Corporation
Shinagawa, NSS-11 Building
2-13-34 Konan, Minato-Ku, Tokyo, Japan
Telephone: 81-3-5461-6111 (switchboard)
Web site: http://www.ebara.co.jp/en/

Installation(s):

Peracetic Acid
Many applications are in Europe, including
- Milan/Taranto, Italy
- Kuopio, Finland

Canadian applications:
- Niagara Falls, Ontario
- Chateauguay, Quebec
- La Prarie, Quebec

U.S. pilots:
- Hannibal, MO
- Stubenville, OH
- Jefferson City, MO
- St Augustine, FL
- Largo, FL

BCDMH
Columbus, GA
Akron, OH

Key Words for Internet Search:

Alternative disinfectant, CSO disinfection, peracetic acid, PAA, peroxyacetic acid, BCDMH

Data Sources:

Brian, K., and M. Tran, “Old City, New Ideas: Peracetic Acid in Wastewater Disinfection at St.Augustine,” Florida Water Resources Journal, April, 2011.

Leong, et al., “Disinfection of Wastewater Effluent: Comparison of Alternative Technologies,” Water Environment Research Foundation (WERF) Report 04-HHE-4, 2008.

Meakim, J.T., et al., “Peroxyacetic Acid Restores Design Capacity for Fecal Coliform Compliance in an Underperforming UV Disinfection Wastewater System with No Capital Upgrade,” Proceedings WEF Specialty Conference on Disinfection, 2009.

Rossi, S., et al., “Peracetic Acid Disinfection: A Feasible Alternative to Wastewater Chlorination,” Water Environment Research, Vol. 79, No. 4, pp. 341–350, 2007.

Moffa, P.E., et al., “Alternative Disinfection Technology Demonstrates Advantages for Wet Weather Applications,” Water Environment and Technology, January 2007.

Disinfection *updated 2012* **Technology Summary**

Alternative Disinfectants [Peracetic Acid (PAA) and BCDMH] (continued)

Columbus Georgia Water Works, CSO Technology Testing web site: http://www.cwwga.org/NationalPrograms/Index.htm

Combined Sewer Overflow Technology Fact Sheet Alternative Disinfection Methods web site: www.epa.gov/owmitnet/mtb/altdis.pdf

Gehr, R., et al., "Disinfection Efficiency of Peracetic Acid, UV and Ozone after Enhanced Primary Treatment of Municipal Wastewater," Water Research, Vol. 37, No. 19, pp. 4573-4586, 2003.

Morris, R., "Reduction of Microbial Levels in Sewage Effluents using Chlorine and Peracetic Acid Disinfectants," Water Science and Technology, Vol. 27, 1993.

WERF, Wet Weather Demonstration Project in Columbus, Georgia, 98-WWR1P.

Kitis, M., "Disinfection of Wastewater with Peracetic Acid: A Review," Environment International, Vol. 30, pp. 47–55, 2004.

Koivunen, J., and H. Heinonen-Tanski, "Inactivation of Enteric Microorganisms with Chemical Disinfectants, UV Irradiation and Combined chemical/UV Treatments," Water Research, Vol. 39, No. 8, pp.1519-1526, 2005.

Liberti, L., and M. Notarnicola, "Advanced Treatment and Disinfection for Municipal Wastewater Reuse in Agriculture," Water Science and Technology, Vol. 40, No. 4-5, pp. 235-245, 1999.

Nutrient Removal *prepared 2012* **Technology Summary**

Ammonia Recovery

Objective:

Removal and recovery of ammonia nitrogen.

State of Development:

Emerging.

Description:

Ammonia recovery from high-concentration sludge liquors such as centrate streams can be accomplished by vacuum distillation or by stripping with air or steam coupled with ammonia adsorption into sulfuric acid to produce ammonium sulfate. The Ammonia Recovery Process (ARP) has achieved ammonia removal from a centrate stream at approximately 1,000 mg/L ammonia –N to less than 100 mg/L ammonia –N (Orentlichter, 2009), but it works well over a range of concentrations. The ammonia is recovered as ammonium sulfate solution that might be a marketable product. Because stripping ammonia requires that it be in the form of free ammonia rather than ammonium ion, the centrate pH and temperature are elevated. Typical municipal design is for pH 9.5 at a temperature of 140 °F, although other combinations of temperature and pH can achieve the similarly high free ammonia fraction required for effective stripping (see the graph below based on equilibrium and thermodynamic constants from Snoeyink and Jenkins, 1980). This requires addition of sodium hydroxide (caustic) or other base and heating of the centrate above the typical inlet range of 90 to 105 °F. To improve stripping efficiency, the ARP system lowers the pressure over the water to a vacuum of 26 to 29 inches in a batch operation lasting approximately 10 minutes (Orenlichter, 2009). This releases the dissolved ammonia gas from solution to be entrained in sulfuric acid, which generates the ammonium sulfate solution product. If desired, the solution produced can be further concentrated using multiple stages of vacuum distillation. According to pilot-scale results with centrate and landfill leachate at various concentrations, the process is first order with respect to ammonia concentration so it can be expected to provide 90% removal over a wide range of influent ammonia concentrations (Orenlichter, 2009).

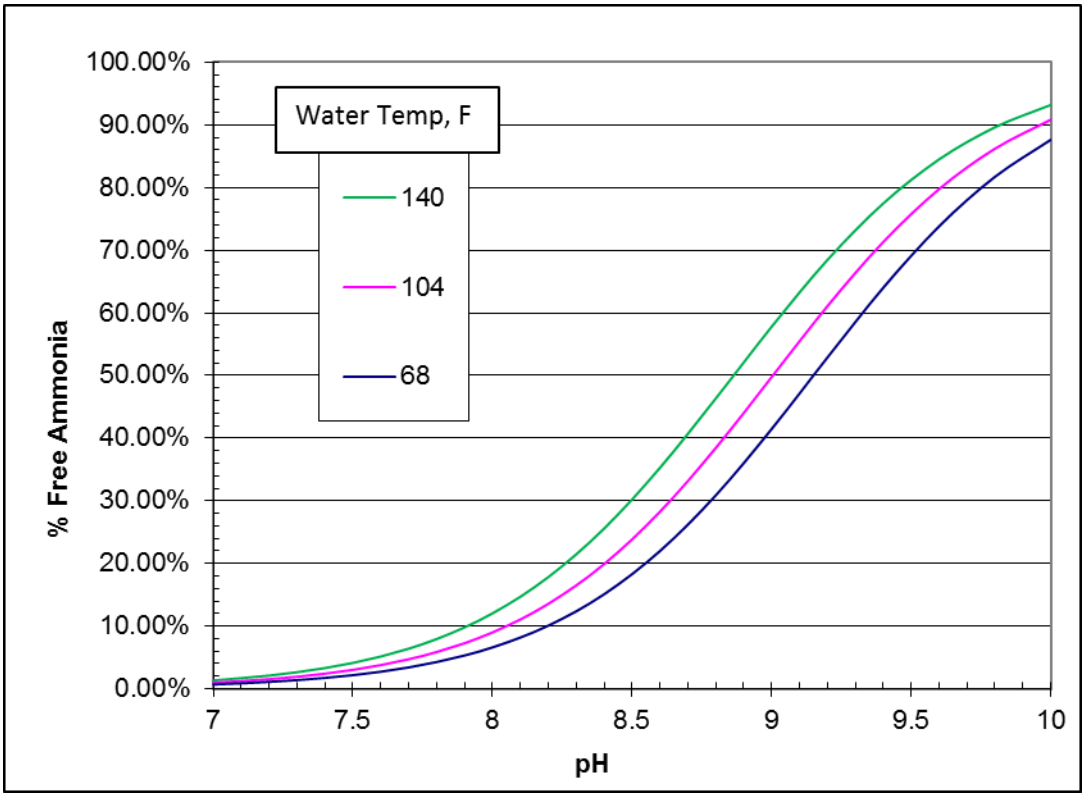

Graph of free ammonia fraction as a function of temperature and pH

Nutrient Removal *prepared 2012* **Technology Summary**

Ammonia Recovery (continued)

Comparison to Established Technologies:

Several technologies exist to remove ammonia including air and steam stripping as well as vacuum distillation. Any of these can be coupled with ammonia recovery as ammonium sulfate. Although the stripping technologies have been known since the 1960s they are rarely applied for ammonia recovery because the process is not economical. Struvite precipitation processes remove and recover ammonia along with the phosphorus target, but the ammonia removal is significantly less when compared to the 90% that is removed/recovered with vacuum distillation. Ammonia removal in municipal wastewaters is typically accomplished with biological processes that require oxygen, can require supplemental carbon, and produce sludge. Vacuum distillation can be shut down and restarted efficiently, so it is more suited to seasonal operation than biological processes for ammonia removal. More concentrated ammonia streams such as encountered in some industrial applications use breakpoint chlorination or air- or steam-stripping. Because it uses significantly less gas volume and operates at a lower temperature, vacuum distillation systems have a much smaller footprint and power requirement than steam or hot air stripping.

Available Cost Information:

Approximate Capital Cost: Equipment for 1.2-MGD centrate, approximately $14,000,000 (ThermoEnergy Corp, 2012).

Approximate O&M Costs: Mainly depend on costs for sodium hydroxide and sulfuric acid consumed in the process.

Vendor Name(s):

ThermoEnergy Corporation (ARP)

323 Center Street

Little Rock, AK 72201

Telephone: 508-854-1628, ext. 302

Email: info@thermoenergy.com

Web site: www.thermoenergy.com

Installation(s):

26th Ward WWTP (1.2 mgd centate), New York City, NY (2012 startup)

Agricultural facility large-scale pilot, Netherlands

Key Words for Internet Search:

Vacuum distillation, ammonia recovery, nitrogen recovery, ARP, CASTIon, RCAST

Data Sources:

Kemp, Simon, and Brown, United States Patent 7,270,796, September 18, 2007.

Orentlicher, M. et al. “Centrate Ammonia Reduction with ARP®: Pilot Data with Synthetic and Actual Wastewaters,” WEF/WERF Nutrient Removal Specialty Conference, 2009.

ThermoEnergy Corp, direct communication, 2012.

Snoeyink, V. and Jenkins, D. Water Chemistry, John Wiley and Sons, New York, NY, 1980.

Oxidation *updated 2012* **Technology Summary**

Blue CAT™

Objective:

Removal of micro-constituents such as endocrine disruptors, hormones, pharmaceuticals, and other complex organics; disinfection, adsorption of macro-contaminants such as phosphorus.

State of Development:

Emerging.

Description:

The Blue CAT™ process is a combination of the Blue PRO™ adsorption filter process with an Advanced Oxidation Process (typically ferric with ozone) for tertiary removal of slowly biodegradable or non-biodegradable micro-constituents that have passed through upstream treatment processes. The oxidation process also provides highly effective disinfection without chlorine by-products. The Blue PRO process provides adsorption of contaminants such as phosphorus in an upflow sand filter with hydrous ferric oxide-coated media and a proprietary pre-reactor. According to the manufacturer, unpublished pilot studies of the Blue CAT system have been conducted at 10 gpm. Results of those studies include total organic compound reduction from 4 to 1.5 mg/L, a high-percentage reduction of estrogenic compounds and pharmaceutical surrogates monitored in the studies, color removal disinfection to less than 2 cfu/100 mL, turbidity reduction to 0.1 to 0.3 NTU, and 95 percent total phosphorus removal. The residual Blue CAT wastestream can be recycled to the head of the plant for additional contaminant removals and other secondary process enhancements. For increased contaminant-removal rates, destruction of organics, or disinfection, two passes through Blue CAT can be combined in series.

Comparison to Established Technologies:

Some evidence shows that Blue CAT requires less power than other advanced oxidation processes because of the system's catalytic configuration to maximize oxidative capability. The only metal salt chemical used is a small amount of iron reagent (4–10 mg/L Fe) for the Blue PRO process. No polymer is used. The manufacturer claims that the process requires lower chemical dosing than typical chemical wastewater treatment processes and, consequently, produces fewer solids. The iron-based reactive agent also provides odor control. Similar to the Blue PRO process, the Blue CAT system is suitable for plants at less than 10 MGD. Because the upflow filters are limited in size, it would be difficult to operate and maintain a facility treating more than 10 MGD because of the sheer number of modules required for treatment.

Available Cost Information:

Approximate Capital and O&M Costs: Unavailable because no full-scale installation is in place.

Vendor Name(s):

Blue Water Technologies, Inc.
10450 North Airport Dr.
Hayden, ID 83835
Telephone: 888-710-2583
Web site: www.blueh2o.net

Installation(s):

No Blue CAT installations as of August 2012.

Key Words for Internet Search:

Blue CAT, catalytic oxidation, ozone, advanced phosphorus removal, endocrine disruptors

Data Sources:

Blue PRO™, "Hydrous Ferric Oxide (HFO) Coated Sand, Adsorptive Media Technical Summary," 2006.

CH2M Hill, Technical Memorandum, "Evaluation of Blue PRO Process at the Hayden Wastewater Research Facility – Final Summary Report," 2006.

Newcombe, R.L., et al., "Arsenic Removal from Drinking Water by Moving Bed Active Filtration," Journal of Environmental Engineering, Vol. 132, No.1, pp. 5–12, 2006.

Oxidation *updated 2012* **Technology Summary**

Blue CAT™ (continued)

Newcombe, R.L., et al., "Phosphorus Removal from Municipal Wastewater by Hydrous Ferric Oxide Reactive Filtration and Coupled Chemically Enhanced Secondary Treatment: Part I. Performance," Water Environment Research, Vol. 80, No. 3, pp. 238-247, 2008.

Newcombe, R.L., et al., "Phosphorus Removal from Municipal Wastewater by Hydrous Ferric Oxide Reactive Filtration and Coupled Chemically Enhanced Secondary Treatment: Part II. Mechanism," Water Environment Research, Vol. 80, No. 3, pp. 248-256, 2008.

Preliminary/Primary Treatment *prepared 2012* **Technology Summary**

Salsnes Filter

Objective:

Removal of fine primary solids using a rotating belt screen.

State of Development:

Emerging.

Description:

The Salsnes filter uses a removable fine mesh screen attached to an inclined moving belt of wire cloth to sieve solids from wastewater simultaneously filtering the water and dewatering the solids. The belt rotates to an "air knife" for self-cleaning with compressed air to remove the solids to a sludge compartment. In one installation, the Salsnes filter has proven to reduce influent BOD and TSS by 40% and 65% respectively (McElroy, 2012). Performance depends on the size distribution of influent solids and the size of the mesh selected for the filter screen which typically ranges from 100 to 500 microns (Sutton et al. 2008) although a 1000 micron mesh screen was installed at the Daphne Utilities WWTF. The screen surface hydraulic loading rate is an important factor affecting screen performance. A pressure transmitter varies belt speed to maintain liquid level at near the overflow elevation to assure effective flow distribution. The belt is backwashed to remove fats, oils, and grease. Filters are available in sizes with capacities up to 2200 gpm for free standing units and 3500 gpm for units installed in a concrete channel. Multiple units may be installed in parallel to achieve the desired capacity. A dewatering screw press is available to transport the solids, and when used can produce sludge at up to 27% solids (Sutton 2008).

Comparison to Established Technologies:

The Salsnes filter's BOD and solids removal performance is equal to or better than traditional primary clarifiers (McElroy, 2012 and Sutton, 2008). According to the manufacturer, land requirements are approximately 1/10th that of primary clarifiers. Solids removed with the Salnes filter and screw press are significantly drier than for a primary clarifier, typically 27% and 4% respectively.

Available Cost Information:

Approximate Capital and O&M Costs: Capital cost is estimated at 30-50% less than for primary clarifiers

Vendor Name(s):

Salsnes Filter AS, Verftsgt. 11
7800 Namsos, Norway
Telephone: +47 74 27 48 60
Web site: www.salsnes.com

Trojan Technologies
(US Representative)
3020 Gore Road
London, Ontario Canada, N5V 4T7
Telephone: 1 888 220 6118 (US/CAN)
Web site: www.trojanuv.com

Installation(s):

Daphne Utilities WWTF, Daphne AL

Key Words for Internet Search:

Salsnes filter, primary treatment, fine screen, rotating belt screen

Data Sources:

McElroy, R. et al., "Restoring Lost WWTP Capacity through Innovative Technologies", WEFTEC 2012.

Sutton, P. et al. "Rotating Belt Screens: An Attractive Alternative for Primary Treatment of Municipal Wastewater" WEFTEC 2008.

Chapter 3

Biological Treatment Processes

3.1 Introduction

Biological treatment processes are systems that use microorganisms to degrade organic contaminants from wastewater. In wastewater treatment, natural biodegradation processes have been contained and accelerated in systems to remove organic material and nutrients. The microorganisms metabolize nutrients, colloids, and dissolved organic matter, resulting in treated wastewater. Excess microbial growth is removed from the treated wastewater by physical processes.

Biological processes are the preferred way of treatment as they are cost effective in terms of energy consumption and chemical usage. For example, biological nutrient removal (BNR) has emerged as the preferred approach for nutrient removal. BNR processes involve modifications of biological treatment systems so that the microorganisms in these systems can more effectively convert nitrate nitrogen into inert nitrogen gas and trap phosphorus in solids that are removed from the effluent. IFAS (Integrated Fixed-film Activated Sludge, MBBR (Moving Bed Bio-Reactor), and MBR (Membrane Bio-Reactor) processes have all become established technologies for situations where reactor volume is at a premium and are particularly well suited to BNR applications. In the last several years, nitritation/denitritation and deammonification processes have made the transition from Europe and are beginning to be implemented at large US utilities.

3.2 Technology Assessment

Table 3.1 presents a categorized list of established, innovative, emerging and research biological treatment process technologies. The list includes most established biological treatment processes and recent developments in cost-effective methods to retrofit older systems or result in systems with smaller footprints. Experience with operation of biological systems and the ongoing effort to maximize process performance have resulted in modification or development of several biological treatment processes that warrant discussion in this chapter on innovative, adaptive use, emerging, and research technologies. Generally, the improvements in established biological treatment processes provide treatment of recycle streams, optimize recycle, and maximize nutrient-removal capabilities.

Selecting and classifying technologies for inclusion in this report was a challenging task. Biological processes in particular are constantly evolving such that in many cases the same process configuration will be known under two or more names or the same name may be applied to slightly different process configurations. Rather than adopting a defined and named configuration, current practice is to use modern process modeling to develop a site specific process configuration. Consequently, skilled practitioners can apply the fundamentals of process engineering to develop an essentially infinite range of site specific process

configurations beyond those presented in this report. Future updates to this report will no doubt rename, reclassify, or even remove some of the process configurations currently included as the report evolves to keep up with the technology developments and engineering practice.

An evaluation of the innovative technologies identified for biological treatment processes relative to their state of development, applicability, potential for effluent reuse and the potential benefits of the technology is presented in Figure 3.1. Summary sheets for each innovative, adaptive use, emerging, and research technology are provided at the end of the chapter. The innovative technologies are: Bioaugmentation, Deammonification, Nitritation/Denitritation, Deep-Shaft Activated Sludge/VERTREAT™, Cyclic Metabolic Environment and Magnetite Ballasted Activated Sludge processes. The adaptive use technologies are: the Biological-Chemical Phosphorus and Nitrogen Removal (BCFS) Process, the Modified University of Cape Town (MUCT) Process, the Westbank Process, and the Modified Anaerobic/Oxic (A/O) Process. These processes have various configurations and modules to fit the specific needs of any individual treatment plant. Most of these technologies can be easily retrofitted into existing treatment systems that enable treatment processes to achieve better nutrient removal.

Emerging technologies included at the end of this chapter are: Membrane Biofilm Reactor (MBfR), Vacuum Rotation Membrane (VRM), OpenCel Focused Pulse, Integrated Fixed-film Activated Sludge (IFAS) Systems with Biological Phosphorus Removal, Multi-Stage Activated Biological Process (MSABP™) and Aerobic Granular Sludge Process (AGSP). Three technologies in the research stage of development are included: Anaerobic Migrating Blanket Reactor (AMBR®), Anaerobic Membrane BioReactor (An-MBR), and Microbial Fuel Cell (MFC) Based Treatment System.

Knowledge about technologies tends to evolve. The information provides a snapshot at a point in time; what is understood at one point in time may change as more information develops. This includes knowledge about operating mechanisms as well as the relative and absolute costs and features of a particular technology. Inquiries into the current state of knowledge are an important step when considering implementation of any technology.

Table 3.1—Biological Treatment Processes – State of Development

Established Technologies (technology summaries not included)
Anaerobic Processes
Anaerobic Attached Growth System
– Upflow Packed-Bed Attached Growth Reactor
– Upflow Attached Growth Anaerobic
– Expanded-Bed Reactor (Anaerobic Expanded Bed Reactor [AEBR])
– Downflow Attached Growth Process
Anaerobic Contact Process
Anaerobic Sequencing Batch Reactor (ASBR®)
Upflow Anaerobic Sludge Blanket (UASB)
ANFLOW (ANaerobic FLuidized Bed Reactor)
BOD Removal and Nitrification
Biolac-Aerated Lagoon
Complete Mix-Activated Sludge (CMAS) Process
Contact Stabilization
Conventional Extended Aeration

Table 3.1—Biological Treatment Processes – State of Development

Established Technologies (technology summaries not included) *(continued)*
Countercurrent Aeration System (CCAS™)
Cyclic Activated Sludge System (CASS™)
Facultative and Aerated Lagoons
High-Purity Oxygen (HPO)
Intermittent Cycle Extended Aeration System (ICEAS™)
Kraus Process
Oxidation Ditch/Aerated Lagoons
Sequencing Batch Reactor (SBR)
Staged Activated-Sludge Process
Step Feed
Biofilm Processes
Biological Aerated Filters (BAF)
– Biofor®
– Biostyr®
Fluidized Bed Bioreactor (FBBR)
Integrated fixed-Film Activated Sludge (IFAS)
– IFAS – Submerged Mobile Media
– IFAS – Submerged Fixed Media
Moving-Bed Bio Reactor (MBBR) Process
Rotating Biological Contactor (RBC)
Submerged Rotating Biological Contactor (SRBC)
Trickling Filter (TF)
Trickling Filter /Solids Contactor (TF/SC)
Nitrogen Removal
Bardenpho® (Four Stage)
BiodenitroTM
Denitrification Filter
Ludzack-Ettinger
Modified Ludzack-Ettinger (MLE)
OrbalTM Process
SchreiberTM Process
Simultaneous Nitrification denitrificatioN (SNdN) Process
Step Feed (Alternating Anoxic and Aerobic)
Wuhrman
Nitrogen and Phosphorus Removal
Anaerobic/Anoxic/Oxic (A2/O)
Bardenpho® (Five Stage)
Johannesburg Process
Step Feed BNR Process
University of Cape Town (UCT)
Virginia Initiative Plant (VIP)

Table 3.1—Biological Treatment Processes – State of Development

Established Technologies (technology summaries not included) *(continued)*	
Phosphorus Removal	
Phoredox (Anaerobic/Oxic [A/O])	
Phostrip	
Membrane Processes	
Membrane Bioreactor (MBR)	
– Tubular	
– Hollow-Fiber	
– Spiral Wound	
– Plate and Frame	
– Pleated Cartridge Filters	
Innovative Technologies	**Summary on page**
Bioaugmentation	
Bioaugmentation	3-7
– External Bioaugmentation	
– Seeding from Commercial Sources of Nitrifiers	
o In-Pipe Technology	
o Trickling Filter and Pushed Activated Sludge (TF/PAS) Process	
o Seeding from External Dispensed Growth Reactors Treating Reject Waters (Chemostat Type)	
o In-Nitri® Process	
o Immobilized Cell-Augmented Activated Sludge (ICASS) Process	
o Seeding from Parallel Processes	
o Seeding from Downstream Process	
– In Situ Bioaugmentation	
o DE-nitrification and PHosphate accumulation in ANOXic (DEPHANOX) Process	
o Bio-Augmentation Regeneration/Reaeration (BAR) Process	
o Bio-Augmentation Batch Enhanced (BABE) Process	
o Aeration Tank 3 (AT3) Process	
o Main stream AUtotrophic Recycle Enabling Enhanced N-removal (MAUREEN) Process	
o Regeneration DeNitrification (R-DN) Process	
o Centrate and RAS Reaeration Basin (CaRRB) Process	
Nitrogen Removal	
Deammonification (Sidestream and Mainstream Deammonification and Mainstream Nitrite Shunt)	3-16
Nitritation and Denitritation (Sidestream)	3-19
Small Site	
Deep-Shaft Activated Sludge/VERTREAT™	3-22
Solids Minimization	
Cyclic Metabolic Environment	3-23

Table 3.1—Biological Treatment Processes – State of Development

Innovative Technologies *(continued)*	**Summary on page**
Solids Settleability	
Magnetite Ballasted Activated Sludge	3-25
Adaptive Use Technologies	**Summary on page**
Nitrogen and Phosphorus Removal	
Biological-Chemical Phosphorus and Nitrogen Removal (BCFS) Process	3-27
Modified University of Cape Town (MUCT) Process	3-29
Westbank Process	3-30
Phosphorus Removal	
Modified Anaerobic/Oxic (A/O) Process	3-31
Emerging Technologies	**Summary on page**
Membrane Processes	
Membrane Biofilm Reactor (MBfR)	3-32
Vacuum Rotation Membrane (VRM®) System	3-34
Nitrogen Removal	
OpenCel Focused Pulse	3-35
Nitrogen and Phosphorus Removal	
Integrated Fixed-film Activated Sludge (IFAS) with Biological Phosphorus Removal	3-36
Solids Minimization	
Multi-Stage Activated Biological Process (MSABP™)	3-37
Solids Settleability	
Aerobic Granular Sludge Process (AGSP)	3-38
Research Technologies	**Summary on page**
Anaerobic Processes	
Anaerobic Migrating Blanket Reactor (AMBR®)	3-41
Anaerobic Membrane BioReactor (An-MBR)	3-43
Electricity Generation	
Microbial Fuel Cell (MFC) Based Treatment System	3-45

Process	Evaluation Criteria									
	Development	Applicability	Benefits	Impact on Processes	Complexity	Air/Odor Emissions	Reuse	Energy	Footprint	Retrofitting
Bioaugmentation										
Bioaugmentation	I, M, N, O	F	C, O	⊖	⊖	⊖	In	⊖	⊖	▲
Nitrogen Removal										
Deammonification	I, M, O, P	F, L	O, S	▲	▼	⊖	▲	▲	⊖	⊖
Nitritation/Denitritation	I, M, O, N	F, L	O, S	▲	▼	⊖	▲	▲	⊖	⊖
Small Site										
Deep-Shaft Activated Sludge/VERTREAT™	M, N, O	F	C, O	▲	⊖	⊖	In	▲	▲	⊖
Solids Minimization										
Cyclic Metabolic Environment	M, N	F	M, N	▲	⊖	⊖	In	▲	▲	▲
Solids Settleability										
Magnetite Ballasted Activated Sludge	M, N	I	C, I, O	▲	▲	⊖	▲	▲	▲	▲

Key

Statement of Development

B = Bench scale
I = Full-scale industrial applications
M = Full-scale municipal applications
O = Full-scale operations overseas
P = Pilot
N = Full-scale operations in North America

Applicability

F = Few plants
I = Industrywide
L = Primarily large plants
S = Primarily small plants

Potential Benefits

C = Capital savings
I = Intense operational demand
O = Operational/maintenance savings
S = Shock load capacity
W = Wet weather load capacity
E = Effluent quality

Effluent Reuse

Dp = Direct potable
Dn = Direct nonpotable
Ip = Indirect potable
In = Indirect nonpotable

Comparative Criteria

▲ Positive feature
⊖ Neutral or mixed
▼ Negative feature

Figure 3.1—Evaluation of Innovative Biological Treatment Technologies

Bioaugmentation *updated 2012* **Technology Summary**

Bioaugmentation

Objective:

To increase treatment capacity by adding bacteria to the bioreactor or upstream of the treatment reactor. Most frequently used to enhance nitrification, thereby allowing more reactor volume to be used for denitrification or phosphorus removal. Can also be used to decrease influent loadings. Note: This fact sheet addresses biological additives and does not include chemical or enzymatic additives.

State of Development:

Innovative.

Description:

Providing active biomass to the influent of any activated sludge process provides a lower effluent substrate (i.e., chemical oxygen demand [COD], ammonia-N) concentration for any particular solids retention time (SRT). Such bioaugmentation also prevents the phenomenon known as *washout* because the reactor will contain active biomass even if the wasting rate exceeds the growth rate. Consequently, bioaugmentation is used to stabilize biological processes that would otherwise be unsustainable at the SRT allowed by the available reactor volume. This is particularly true for nitrification processes that operate at relatively slow growth rates and require long SRTs for stability. In nitrifying systems, the need for an aerobic SRT sufficient to nitrify determines the aeration basin volume. By using bioaugmentation to reduce the required SRT, the capacity of the aeration basin is increased or the aerobic volume can be reduced. Reducing aerobic volume by converting a portion of the basin to anoxic or anaerobic operation can allow conversion to a biological nutrient removal (BNR) process without additional reactor tankage. Two types of bioaugmentation schemes can be used: (1) external bioaugmentation and (2) in situ bioaugmentation. External bioaugmentation includes adding external-source nitrifiers; in situ bioaugmentation provides internal process enhancements that increase activity or enrich nitrifier population. The advantage of external bioaugmentation schemes is that the promotion of nitrification in the mainstream process can be decoupled from its aerobic SRT. The advantage of in situ schemes is that there is less concern about the loss of activity of the seed nitrifiers when transferred to the mainstream process because their conditions of growth (i.e., temperature, osmotic pressure) are similar to those prevalent in the mainstream process.

External Bioaugmentation

Examples of external bioaugmentation include seeding from commercial sources of nitrifiers, Trickling Filter and Pushed Activated Sludge (TF/PAS) process, seeding from external dispersed growth reactors treating reject waters, seeding from external activated sludge reactors treating reject waters, seeding from parallel processes, and seeding from downstream processes. Some facilities having both air-activated sludge systems and high-purity oxygen systems have proven that nitrification in the high-purity oxygen can be significantly enhanced by seeding with nitrification solids from the parallel aerated BNR system. This procedure is not patented. External bioaugmentation is performed in Hagerstown, Maryland, Henrico County, Virginia, and Hopewell, Virginia. Note, nitrification in high-purity oxygen plants is typically limited by pH inhibition.

Seeding from Commercial Sources of Microorganisms: Although early attempts at bioaugmentation with commercial seed sources in wastewater treatment plants (WWTPs) produced controversial results, bioaugmentation for nitrification has readily measurable success. Adding external nitrifiers' sources has shown some success at both laboratory and field scale and allows operation at colder temperatures where nitrifiers would normally wash out, but required dosages of the nitrifiers were very high. Therefore, most investigators diverted to onsite production of seed organisms in the treatment plant. One exception is the seeding microorganisms directly to the sewer system known as In-Pipe Technology.

Bioaugmentation *updated 2012* **Technology Summary**

Bioaugmentation (continued)

In-Pipe Technology Process: This approach uses facultative microorganisms added to the sewer system upstream of the treatment facility with the goal of supplementing/modifying the biofilm on the walls of the sewer pipe. Using bioaugmentation in this way, the sewer is intended to become a part of the treatment process by reducing organic loading to the WWTP and transforming slowly degradable COD to readily degradable COD. Because sewer conditions generate relatively low sludge yield, waste activated sludge is decreased. Shearing of active biomass from the sewer walls provides indirect bioaugmentation to the downstream WWTP but would not include any significant nitrifier content. However, reducing COD loading and waste activated sludge production would result in an increased nitrifier fraction and an increased SRT for a given aerobic volume, thereby increasing nitrification capacity. In-Pipe Technology uses dosing units installed at strategic locations in the sewer system and resupplies them with concentrated microbial stock for a monthly fee per MGD treated.

Trickling Filter and Pushed Activated Sludge (TF/PAS) Process: The earliest example of external bioaugmentation with nitrifiers generated in the plant from a wastewater source is likely that of the TF/PAS process, whereby the total organic loading on the trickling filter is adjusted to achieve about 50 percent nitrification, thus seeding nitrifiers to a downstream activated sludge step with a low SRT of 2 to 4 days. It appears that the enhanced nitrification rates achieved could be because of both the effect of seeding and removing toxicants in the wastewater by pretreatment of the trickling filter.

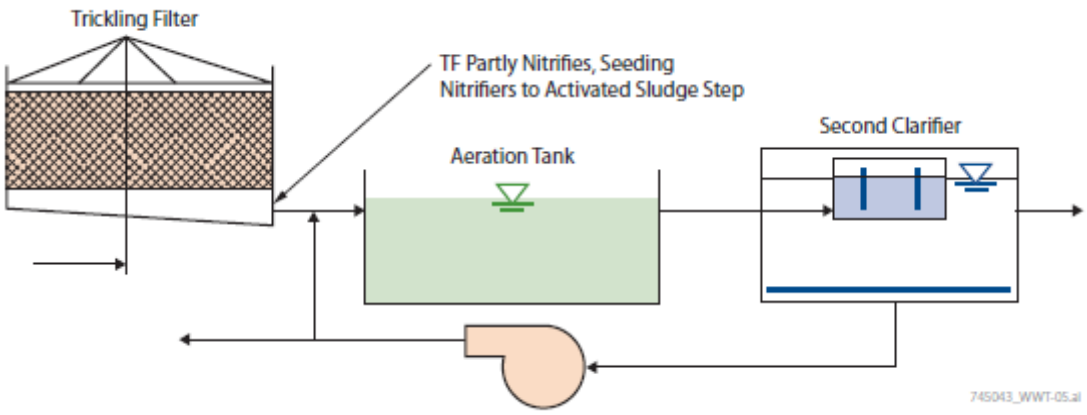

Process Flow Diagram for Trickling Filter/Pushed Activated Sludge

Bioaugmentation (continued)

Seeding from External Dispersed Growth Reactors Treating Reject Waters (Chemostat Type): Some success has been reported with chemostats seeding batzch reactors simulating mainstream processes. Nitrifiers grown in batch-fed, sidestream chemostats are more effective in stimulating the process efficiency in the simulated mainstream reactors than are those grown in continuously fed chemostats. It has been shown that the specific nitrifier types grown in the sidestream chemostats are able to replace the microbial population in the mainstream reactors, suggesting that population diversity leads to more robust mainstream reactors.

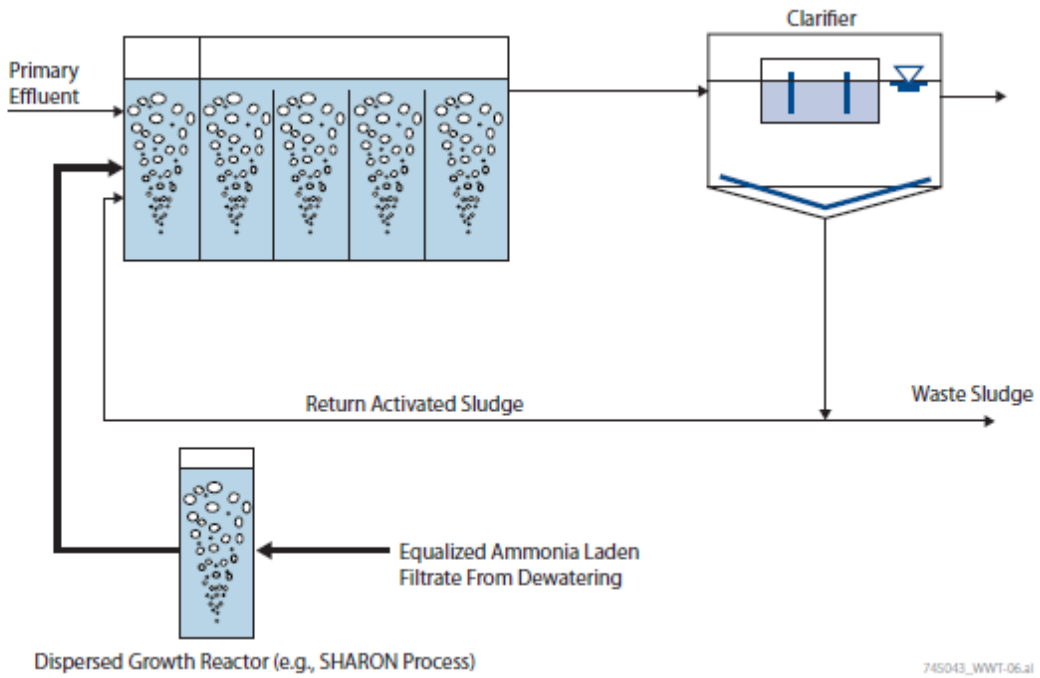

Process Flow Diagram for Seeding from External Dispersed Growth

Bioaugmentation *updated 2012* **Technology Summary**

Bioaugmentation (continued)

In-Nitri® Process: A patented process known as the Inexpensive Nitrification or In-Nitri® process uses a separate activated sludge process (aeration tank and clarifier) to treat the ammonia-rich sidestream from digester supernatant or dewatering. Compared to the mainstream, the sidestream has a much greater ammonia-N:COD ratio and usually a higher temperature, a nitrifying SRT can be maintained in a much smaller aeration basin. Further, the excess sludge from the sidestream system acts to augment the nitrifiers in the mainstream aeration tank. With the nitrifier bioaugmentation from the sidestream, the SRT required to achieve nitrification in the mainstream reactor is reduced. The process has the advantage of achieving year-round nitrification by reducing the SRT by adding only a small aeration tank and clarifiers for growing nitrifiers.

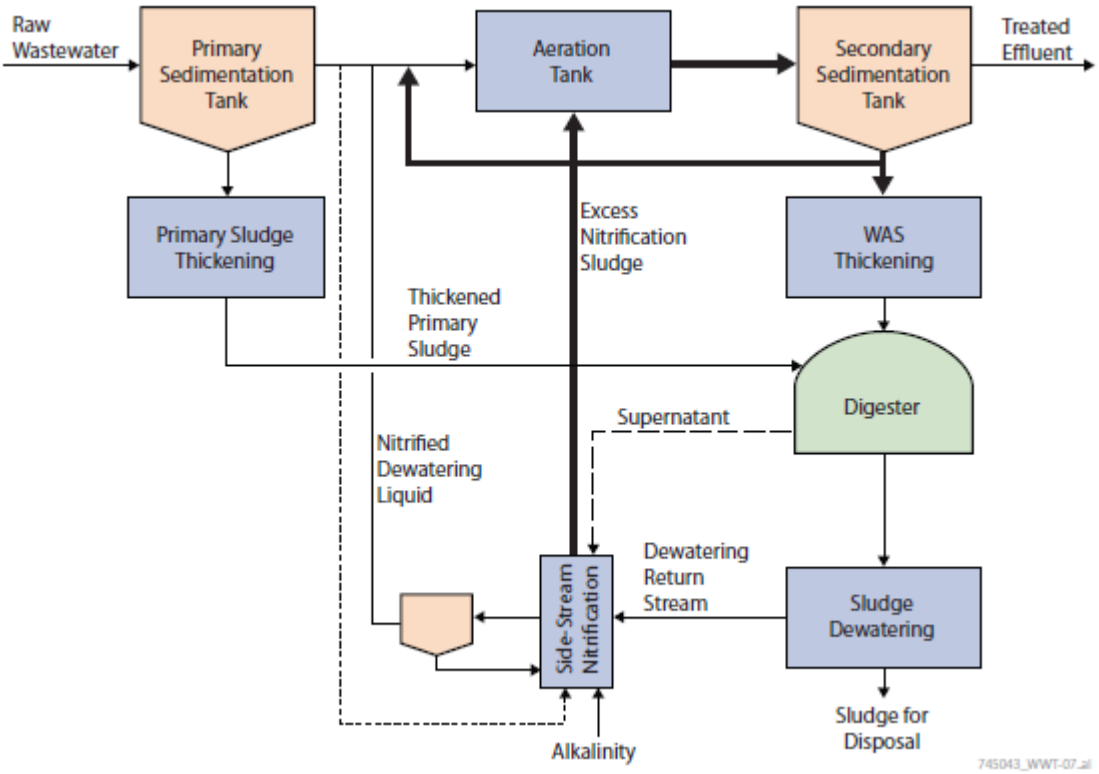

Process Flow Diagram for Inexpensive Nitrification

Immobilized Cell-Augmented Activated Sludge (ICAAS) Process: Immobilized cells are maintained for a specific treatment activity and are enriched in a reactor for bioaugmentation. The ICAAS process employs the immobilized cells that are activated and maintained for their specific treatment activity in an offline enricher reactor for bioaugmentation. The process has been effectively used in bench-scale reactors for treating hazardous-compound shock loads, to achieve enhanced nitrate removal and to increase general performance of the treatment process.

Seeding from Parallel Processes: Two schemes have been proposed to grow nitrifiers in a membrane bioreactor and seed a high-rate BNR process. However, results on pilot or full-scale trials have not yet been reported. Another approach included two parallel activated-sludge processes, tertiary nitrifying membrane bioreactor seeding paralleling a high-rate activated sludge process. Some process issues in this scheme are that membranes select for filtering, not settling biomass; seeding effectiveness is likely affected by predation; and the process fits only some nutrient-removal flow diagrams.

Bioaugmentation (continued)

Seeding from Downstream Process: This seeding process was developed for the main treatment plant in Vienna, Austria. The plant uses two stages of activated sludge in which the first stage is operated at a short (2-4 day) SRT and the second stage is operated at a long SRT for nitrification/denitrification. In this scheme, nitrifying mixed liquor is wasted from the second stage to the first stage, resulting in some nitrification in the first stage. Under normal circumstances10 to 40 percent of the influent is bypassed to the second stage to provide carbon for denitrification. A similar process is operated at the Howard F Curren WWTP in Tampa Florida where the first stage operates as a high purity oxygen activated sludge process receiving WAS from the second stage nitrification process thereby providing some nitrification in the first stage.

In Situ Bioaugmentation

Separate-stage nitrification processes, in which carbon is removed in an initial biological stage and then followed by a separate-stage nitrification process, are the first examples of in situ bioaugmentation. A three-sludge system incorporating separate-stage nitrification was promoted as a preferred technology in 1970s. The main reason for this was that the separate steps of carbon removal, nitrification, and denitrification could each be optimized. Fixed-film systems have also been used for separate stage nitrification. The purpose of these systems was threefold: (1) use of media with high-mass-transfer rates; (2) use of recirculation to improve media-wetting and gain maximum nitrifying biofilm coverage and minimization of influent solids to avoid competition for oxygen from heterotrophs; and (3) the control of predators with flooding and alkaline treatment.

DE-nitrification and PHosphate accumulation in ANOXic (DEPHANOX) Process: This process includes a combination of suspended growth and fixed-film systems in separate stages. DEPHANOX is based on the phenomenon of simultaneous denitrification and phosphate accumulation in the anoxic zone. The solids removed at the primary settling tank are combined with the nitrified wastewater to provide the carbon source required for denitrification. The nitrification stage is a biofilm reactor in standard DEPHANOX applications. A modified approach is to use a suspended biomass reactor for nitrification but to follow it with a clarifier so that the nitrifying biomass is kept separate from the phosphorus accumulating and denitrifying biomass.

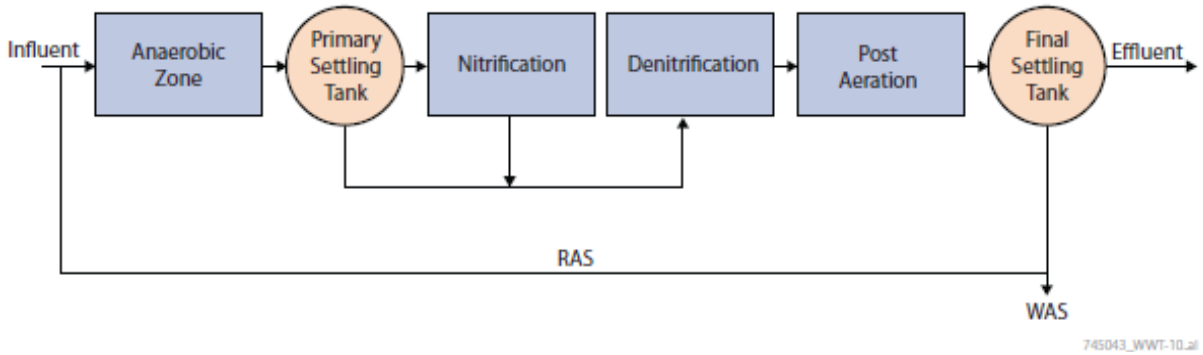

Process Flow Diagram for DEPHANOX Process

Bio-Augmentation Regeneration/Reaeration (BAR) Process: In the Bio-Augmentation R Process, in the Czech Republic the R stands for regeneration zone, and in the United States the R stands for reaeration. The BAR process simply recycles the ammonia-laden filtrate or centrate from dewatering of aerobically digested sludge to a reaeration (regeneration) tank and receives the entire return activated sludge flow into an aeration tank. The high ammonia concentration and elevated temperature in that tank promote nitrification and develop a concentrated culture of nitrifiers. The mixed liquor from the reaeration (regeneration) zone flows to the aeration basin properly seeding it with nitrifiers. A key difference between the BAR process and In-Nitri is that introduction of returned activated sludge (RAS) from the mainstream reactor allows the seed nitrifiers to be incorporated into already well-developed flocs, thereby providing some protection against environmental

Bioaugmentation (continued)

shock when they enter the main aeration basin. The lack of a clarifier or other means to concentrate the biomass concentration in the nitrifier seed reactor reduces the degree of control that is available using In-Nitri. The BAR process was independently developed in the United States and Czech Republic.

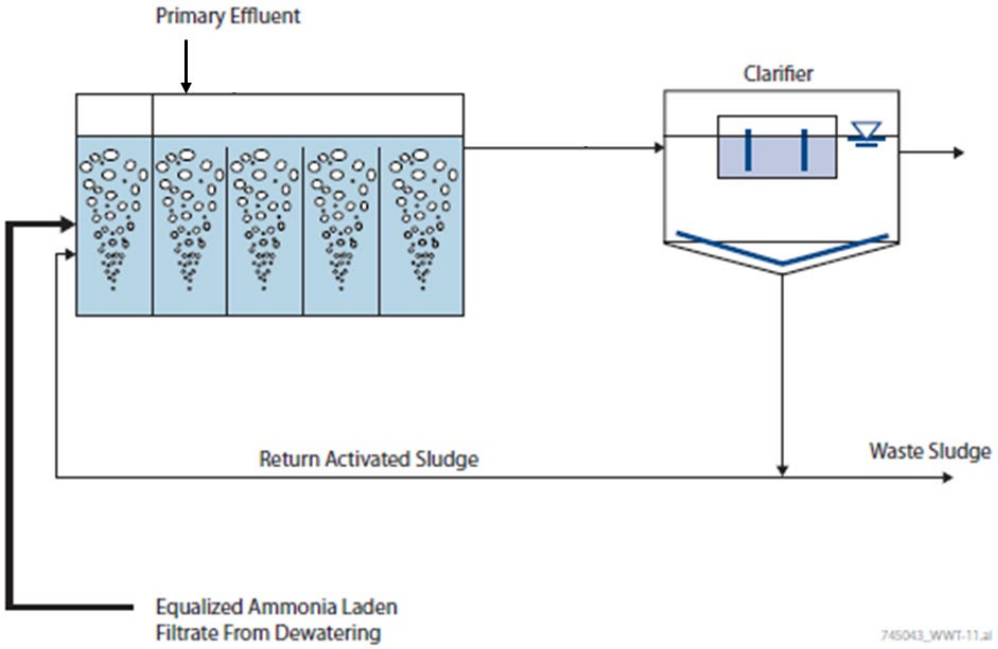

Process Flow Diagram for BAR Process

Bio-Augmentation Batch Enhanced (BABE) Process: The patented BABE process is composed of a sequencing batch reactor (SBR) that is fed with the reject water from the sludge dewatering process and a portion of the RAS from the treatment system. The BABE process is similar to the BAR process, but configuring the nitrifying seed reactor as an SBR provides a means to control the biomass concentration there. Longer sludge age can be achieved in the SBR tank, which helps the nitrifying bacteria to adapt and grow in the BABE reactor. The SBR follows the phases of the standard treatment cycle, i.e., fill and aerate, react, settle, and waste.

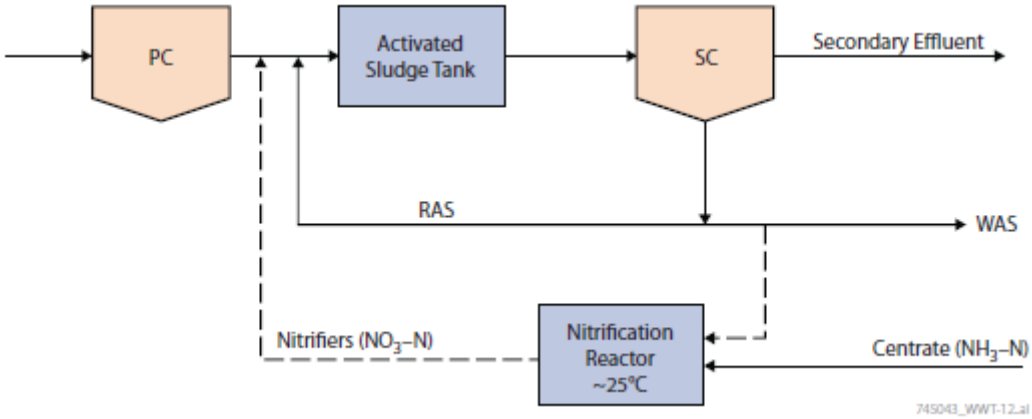

Flow Diagram for BABE Process

Bioaugmentation (continued)

Aeration Tank 3 (AT3) Process: The AT3 process is similar to BAR process but differs in sending a smaller fraction of the RAS to the reaeration tank, and it has a downstream anoxic zone. The process goal is to stop the nitrification process at the nitrite stage (nitritation) by control of dissolved oxygen and pH to reduce the consumption of carbon and oxygen for complete denitrification. Adding an external carbon source at the anoxic zone might be needed to accomplish denitrification.

Mainstream AUtotropic Recycle Enabling Enhanced N-removal (MAUREEN) Process: The MAUREEN process includes a sidestream bioreactor to allow for nitrification and denitrification of the centrate stream. The configuration is similar to the AT3 process but has biomass recycling at the sidestream reactor. This process was developed for the Blue Plains Advanced Wastewater Treatment Plan (AWTP) and provides significant flexibility when applied to the two-sludge system at the plant. The configuration includes preferential bioaugmentation of ammonia-oxidizing bacteria from the second to the first stage via the sidestream reactor and oxidation of ammonia in reject centrate to nitrite in the enrichment reactor, resulting in reduced power and chemical consumption. This process has the ability to fortify the second-stage system with a combination of primarily ammonia oxidizers and anoxic methanol-degrading bacteria produced in the sidestream reactor under conditions that would limit the presence of nitrite-oxidizing bacteria and heterotrophic bacteria. Supernatant from the sidestream process can be used for odor and corrosion control in the headworks or in process streams at the plant. Key to the success of the process is the physical configuration and selection of operating conditions of the sidestream reactor.

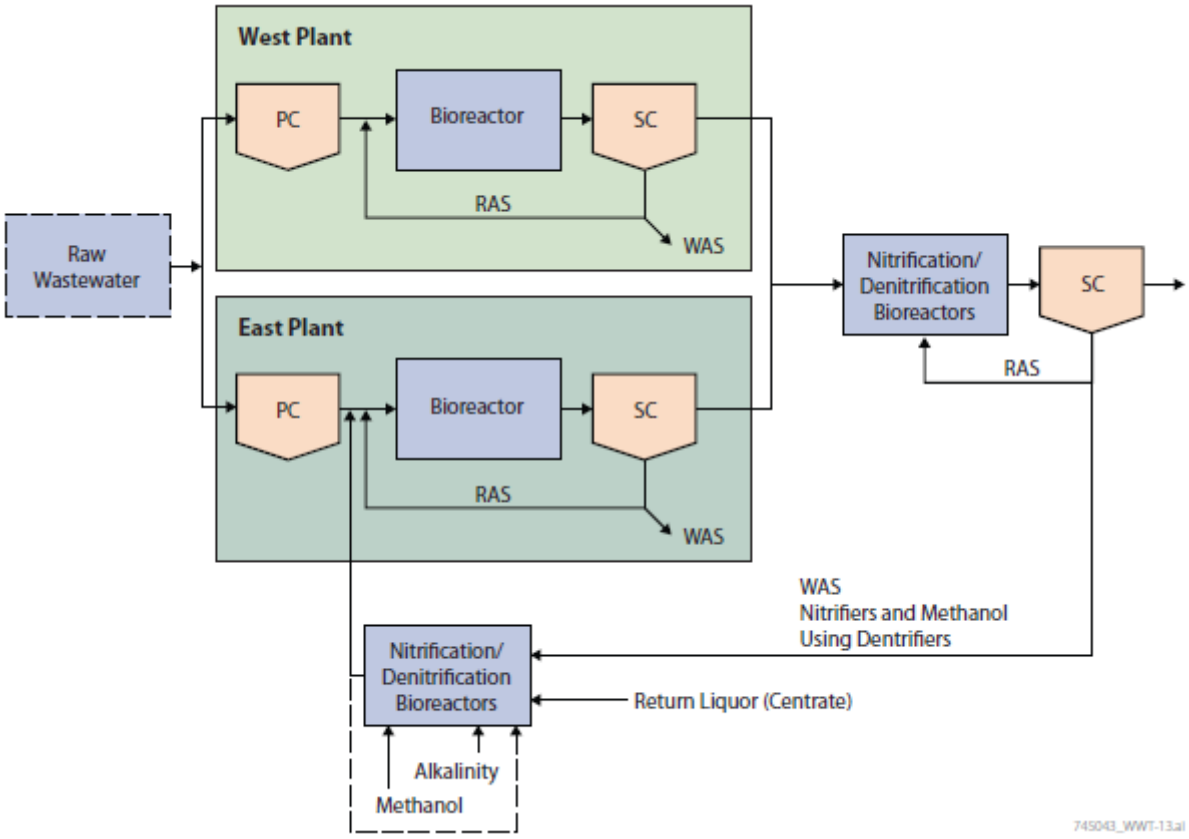

Process Flow Diagram for MAUREEN Process

Bioaugmentation *updated 2012* **Technology Summary**

Bioaugmentation (continued)

Regeneration-DeNitrification (R-DN) Process: The R-DN process is identical to BAR process and involves filtrate or centrate bioaugmentation. It was independently developed in the Czech Republic and the United States.

Centrate and RAS Reaeration Basin (CaRRB) Process: Another named process that is identical to the BAR and R-DN processes.

Comparison to Established Technologies:

Bioaugmentation processes can be used to reduce the bioreactor volume of many mainstream treatment processes. In general they reduce the loading to the mainstream plant by pretreating the high-strength recycle flow while providing the mainstream plant with seed organisms generated in the sidestream reactor. Depending on the needs of the mainstream process, the sidestream process can be configured to augment populations of both nitrifiers and denitrifiers. The biomass generated by the sidestream reactor allows the mainstream reactor to be smaller in volume while providing the required SRT. The reduction in required volume can allow a portion of the basin volume to be converted to provide denitrification or phosphorus removal. By pretreating the sidestream before blending into the mainstream process, loading and performance can be stabilized.

Available Cost Information:

Approximate Capital Cost: Cost information is not available from vendors. However, bioaugmentation processes save capital costs in the main treatment systems because of reduced reactor volumes via the augmentation of nitrifying bacteria.

Approximate O&M Costs: The operating costs are mainly related to mixing and aeration requirements and depend on local conditions and the available equipment. Bioaugmentation processes also save operating costs in the main treatment through the augmentation of nitrifying bacteria. Actual costs were not disclosed.

Vendor Name(s):

In-Pipe Technology
100 Bridge Street
Wheaton, IL 60187
Telephone: 630-871-5844
Email: jelliott@in-pipe.com
Web site: www.in-pipe.com

DHV Water BV, BABE Process
P.O. Box 484
3800 AL Amersfoort, The Netherlands
Telephone: 0031-33-468-2200
Email: info@wa.dhv.nl
Web site: http://www.dhv.com/water/

M2T (Mixing and Mass Transfer Technologies), In-Nitri Process
P.O. Box 315
State College, PA 16804
Telephone: 814-466-6994 or 888-715-9600
Email: info@m2ttech.com
Web site: http://m2ttech.com/index.asp

Installation(s):

In-Pipe Technology: 38 active applications as of 2012 including Orange Park, FL; Missouri City, TX; Leesport, PA; Jackson, MS; Plymouth, MA; Ft Dodge, IA; Huntington, NY; Maricopa, AZ; Spring Valley, IL; Charles County, MD; Crown Point, IN; Suffolk County, NY

TF/PAS Process: Central Valley WRF Utah; Melrose, MN

In-Nitri Process: Richmond, VA; Harrisburg, PA pilot, Tucson, AZ pilot

BAR (R-DN, CaRRB) Process: Appleton WWTP, WI; Theresa Street WWTP, Lincoln, NE; Hite WWTP, Denver, CO; Blue Lake WWTP, Shakopee, MN; Woodward Ave WWTP, Hamilton, Ontario, Canada; and 20 plants in the Czech Republic

AT3 Process: 26th Ward WWTP, Hunts Point WWTP, Bowery Bay WWTP New York City, NY

BABE Process: Hertozenbosch Netherlands, Garmerwolde Netherlands

MAUREEN Process: Blue Plains AWTP, Washington, DC

Bioaugmentation (continued)

Key Words for Internet Search:

Bioaugmentation, In-Pipe Technology, BABE process, InNitri

Data Sources:

Law, K. and Stinson, B., "Sidestream Treatment Overview," IWEA Watercon, 2012.

Katehis, D., et al. "Nutrient Removal from Anaerobic Digester Side-Stream at the Blue Plains AWTP," WEFTEC, 2006.

Salem, S., et al. "Bio-augmentation by Nitrification with Return Sludge," Water Research, Vol. 37, pp. 1794-1804, 2003.

Constantine, T.A., et al., "New Nitrifier Bioaugmentation Process Configure to Achieve Year Round Nitrification at Low SRTs," Proceedings of WEFTEC, 2001.

Daigger, G.T., et al., "Incorporation of Biological Nutrient Removal (BNR) into Membrane Bioreactors (MRBs)," Proceedings of the International Water Association (IWA) Specialized Conference on Nutrient Management in Wastewater Treatment Processes and Recycle Streams, Krakow, Poland.

Katehis, D., et al., "Enhancement of Nitrogen Removal Thru Innovative Integration of Centrate Treatment," WEFTEC, 2002.

Parker, D.S., and J. Wanner, "Improving Nitrification through Bioaugmentation," WEF, Nutrient Removal Conference, 2007.

Parker, D., Brown, and Caldwell, "Nutrient Removal, How low can we go and what is stopping us from going lower? Improving Nitrification through Bioaugmentation," WERF Presentation, 2007.

Stensel, H.D, "Sidestream Treatment for Nitrogen Removal," 11th Annual Education Seminar Central States Water Environmental Association, 2006.

http://m2ttech.com/index.asp

http://www.dhv.com/water/

Nitrogen Removal *prepared 2012* **Technology Summary**

Deammonification (Sidestream and Mainstream Deammonification and Mainstream Nitrite Shunt)

Objective:

Biological nitrogen removal from high-strength streams (e.g., sludge liquors, landfill leachate).

State of Development:

Innovative (Sidestream Deammonification) and Emerging/Research (Mainstream Deammonification and Mainstream Nitrite Shunt).

Description:

The deammonification process (sidestream) involves removing ammonia in a two step process that requires initial partial nitritation to convert approximately 50 percent of the ammonia to nitrite. Anaerobic ammonia oxidation (Anammox) bacteria convert the nitrite and the remaining ammonia to nitrogen gas under anoxic conditions. The process requires only partial nitritation, which theoretically reduces the energy demand up to 63 percent compared to conventional nitrification and denitrification. The deammonification process is a completely autotrophic process and does not require any supplemental carbon.

Mainstream deammonification and mainstream nitrite shunt are two emerging/research technologies that offer much promise. Beyond the savings in aeration energy and supplemental carbon associated with Nitrogen removal, is the dramatic energy benefit of redirecting wastewater carbon to anaerobic processes for energy generation, as well as the BNR process volume benefit associated with keeping the carbon out of that system and the additional aeration energy benefit of the same.

Example processes – DEMON®, SHARON-ANAMMOX, ANAMMOX® Paques, ANITA-Mox, DeAmmon

Where is it applied – The deammonification process has been successfully implemented as a sidestream process for treating centrate and filtrate recycle streams from dewatering anaerobically digested biosolids, with over 20 first generation municipal and industrial processes operational in Europe. The relatively high temperature and high ammonia concentrations typically found in these recycle flows make them ideal candidates for this process. Deammonification has not yet been installed in the main liquid stream process at full scale due to the difficulty in inhibiting nitrite oxidizing bacteria (NOB) growth, the relatively lower temperature and ammonia concentration, and the need for selective retention of Anammox bacteria. However, a full-scale full-plant deammonification demonstration has been installed at the Strass WWTP in Austria where a sidestream deammonification process can provide seed for bioaugmentation in the full-plant testing. Pilot scale testing of full-plant deammonification is also being implemented at plants in Washington DC and Virginia.

Process Controls – The main process controls are solids retention time (SRT), pH, dissolved oxygen, temperature, and nitrite concentration. Aeration mode (continuous vs. intermittent) and whether to use innoculum of Anammox bacteria are also used in process control as competition for oxygen between ammonia oxidizing bacteria (AOB) and NOB is controlled by DO level and aeration time and regimen. Monitoring the biomass is also used for volatile suspended solids content as well microscopic analysis as indicators of efficient operation. The control of the deammonification process is similar to the nitritation and denitritation process because NOB growth must be inhibited. In addition, the deammonification process must have adequate SRT. The growth rate of anammox bacteria is extremely slow (approximately 13 times slower than nitrifying autotrophs), which requires special attention to SRTs in the deammonification reactors to prevent anammox washout. Anammox bacteria tend to grow as relatively heavy granules, which allows for the possibility of separating anammox bacteria from other ammonia oxidizing bacteria (AOB) and NOB. The use of cyclone (such as in the DEMON® process), or through the controlled granular size (such as in the ANAMMOX® Paques process) allows for separate control of the anammox SRT (must be more than 30 days) while maintaining optimal SRTs for AOB growth (typically between 2 to 3 days).

Configurations – Several process configurations are used for the deammonification process. Paques has both the two-step SHARON-ANAMMOX process as well as a one-step granular sludge process with both AOB and anammox in the reactor at the same time. The SHARON-ANAMMOX process (ANAMMOX – Paques) is a two-stage, suspended growth implementing a SHARON reactor, followed by an anoxic anammox reactor. The SHARON reactor does not have solids retention while the anammox reactor uses an upflow solids granulation process to generate biomass that will be retained in spite of the slow growth rate.

Nitrogen Removal *prepared 2012* **Technology Summary**

Deammonification (Sidestream and Mainstream Deammonification and Mainstream Nitrite Shunt) (continued)

The second configuration (DEMON) involves a single SBR where the nitritation and anammox processes occur simultaneously and biomass is retained using a hydrocyclone process to promote sludge granulation. The DO is controlled at very low levels (< 0.3 mg/L) along with the pH to monitor nitritation. The third configuration (Anita-MOX, DeAmmon) uses carrier media similar to moving bed bioreactors as a means to retain the anammox organisms in the system. In these attached growth systems, nitritation takes place in the outer biofilm while the anammox bacteria are found in the inner biomass. Completely autotrophic nitrogen removal over nitrite (CANON) and oxygen-limited autotrophic nitrification denitrification (OLAND) are other terms used to identify the processes that are now generically described as ***deammonification***.

Comparison to Established Technologies:

The deammonification process can save up to 63 percent of the oxygen demand (energy) compared to conventional nitrification/denitrification with nearly 100 percent reduction in carbon demand, 80 percent reduction in biomass production and no additional alkalinity requirement. In comparison, the nitritation/denitritation process can achieve a 25 percent reduction in oxygen (energy) demand, 40 percent reduction in carbon demand, and 40 percent reduction in biomass production when compared to conventional nitrification/denitrification. The deammonification process is completely autotrophic and does not require supplemental carbon (another benefit of deammonification over nitritation/denitritation). Because supplemental carbon is not required for deammonification, biosolids production is very low by comparison to alternative processes. Based on reported data, the deammonification process can achieve up to 95 percent ammonia removal. Because the anammox organisms (planctomycetes) are extremely slow growing, the deammonification process is slow to start without seed organisms from an operating facility, and special care must be taken to retain the biomass to provide the long SRT required.

Available Cost Information:

Approximate Capital Cost: Not disclosed by the vendor.
Approximate O&M Costs: Not disclosed by the vendor.

Vendor Name(s):

DEMON® – World Water Works, Inc.
Chandler Johnson
4000 SW 113th Street
Oklahoma City, OK 73173
Telephone: 855-466-2271
Email: CJohnson@worldwaterworks.com
Web site: http://www.worldwaterworks.com

ANITA™ Mox – Veolia Water, Inc.
Hong Zhao
401 Harrison Oaks Blvd, Suite 100
Cary, NC 27513
Telephone: 919-677-8310

Installation(s):

Full-scale systems have been operated in Europe. The first U.S. installation DEMON) became operational at Hampton Roads Sanitation District in 2012, the process is under construction at Alexandria Sanitation Authority and several other US projects are under design. The technology is available commercially.

DEMON® - Nine full-scale side-stream installations are in Austria (Strass), Germany, Switzerland (Glarnerland), Netherlands (Apeldoorn), Finland, and Hungary. The first full-scale US installation has been operating at the HRSD York River WWTP since October 2012. Several installations are under construction in the United States (Alexandria, VA) and several are in the design phase.

ANITA™ Mox/DeAmmon – Installations are in Sweden (Himmerfjarden, Växjö, and Malmö), Holbæck Denmark, Germany (Hattingen), and China (Dalien). No installations are in the United States, but this process is in the design phase for the HRSD

Nitrogen Removal *prepared 2012* **Technology Summary**

Deammonification (Sidestream and Mainstream Deammonification and Mainstream Nitrite Shunt) (continued)

Email: hong.zhao@veoliawater.com
Web site: http://www.veoliawatersystems.com

DeAmmon – Purac
Box 1146
SE 221 05
Lund, Sweden
Telephone: 46-46-19-19-00
Fax: 46-46-19-19-19
Email: pt@purac.se
Web site: www.lackebywatergroup.com

ANAMMOX® and SHARON ANAMMOX- Paques
Aafko Sheringa
T. de Boerstraat 24
8561 EL Balk
The Netherlands
Telephone: 31-0-514-60-85-83
Email: a.sheringa@paques.nl
Web site: http://en.paques.nl

James River WWTP, and a pilot test is underway at the Denver MWRD plant.

Key Words for Internet Search:

Deammonification, anammox, sidestream treatment, DEMON process, ANITA-Mox, CANON process, OLAND process

Data Sources:

Joss, A., et al., "Combined Nitritation–Anammox: Advances in Understanding Process Stability," Environmental Science and Technology, Vol. 45, No. 22, pp. 9735–9742, 2011.

Rogalla, F., "Sustainable Solutions," Water and Waste Treatment, Vol. 54, No. 2, 2011.

Daigger, G.T., et al., "Implementation of a Full-Scale Anammox-Based Facility to Treat and Anaerobic Digestion Sidestream at the Alexandria Sanitation Authority Water Resource Facility," Proceedings of the Nutrient Recovery and Management Conference 2011, Miami, FL, CD-ROM January 9-12, 2011.

Gustavsson, D. J. I., "Biological Sludge Liquor Treatment at Municipal Wastewater Treatment Plants - A Review", VATTEN 66:179-192. Lund 2010.

Wett, B., "Development and Implementation of a Robust Deammonification Process," presentation at the Leading Edge Technologies Conference, Singapore, 2007. http://cyklar.ch/libraries.files/RobustDEMONProcess.pdf

Wett, B., et al., "Key Parameters for Control of DEMON Deammonification Process," presentation at the Nutrient Removal Conference in Baltimore, MD, 2007.

De Clippeleir, H., et al., "OLAND is feasible to treat sewage-like nitrogen concentrations at low hydraulic residence time," Proceedings of the Nutrient Recovery and Management Conference 201, Miami, FL, CD-ROM January 9-12, 2011.

Veolia Water Solutions: http://www.veoliawater.com

Phone conversations with World Water Works staff, 2012.

Vendor-supplied information

Nitrogen Removal *prepared 2012* **Technology Summary**

Nitritation and Denitritation (Sidestream)

Objective:

Biological ammonia removal from high-strength streams (e.g., sludge liquors, landfill leachate).

State of Development:

Innovative.

Description:

This process involves the oxidation of ammonia to nitrite (nitritation) in an aerobic environment; however, unlike nitrification, the nitritation process stops the oxidation at nitrite and does not proceed from nitrite to nitrate (nitratation). To accomplish nitritation without nitratation, reactor environmental conditions are controlled to promote the growth of ammonia-oxidizing bacteria (AOB), such as nitrosomonas, while inhibiting the growth of nitrite-oxidizing bacteria (NOB), such as nitrobactor and nitrospira. The high temperature of the sludge liquors favor NOB washout because the aerobic NOB grow faster than NOB at temperatures above 20 °C (Hellinga et al. 1998). Nitritation is desirable because it consumes approximately 25 percent less oxygen than complete nitrification. To provide complete nitrogen removal, nitritation is often coupled with denitritation. Similar to the more common denitrification process for reducing nitrate, the process of denitritation involves reducing nitrite to nitrogen gas by heterotrophic bacteria using carbon as an electron donor in an anoxic environment. The reactor is likely carbon limited requiring a supplemental carbon source. The denitritation process requires 40 percent less carbon than the denitrification process. The nitritation-denitritation process (the nitrite shunt) results in a reduction in sludge production of approximately 30 to 40 percent compared to a conventional nitrification-denitrification process.

The nitritation process is also used to produce nitrite as an electron acceptor for the deammonification process (i.e., DEMON), which uses specialized autotrophic microorganisms (ANAMMOX) to oxidize ammonium and generate nitrogen gas (from ammonia and nitrate) without the carbon consumption of denitrification or denitritation.

Example processes – Single-Reactor High-activity Ammonia Removal Over Nitrite (SHARON), which is a chemostat process without biomass retention; and Strass Sequencing Batch Reactor (SBR), often with a high solids retention time (SRT), which increases the internal carbon source for denitritation.

Where is it applied – The nitritation and denitritation process has been successfully implemented as a sidestream process for treating centrate and filtrate recycle streams from dewatering anaerobically digested biosolids. The relatively high temperature and high ammonia concentrations typically found in these recycle flows make them ideal candidates for this process. Nitritation-denitritation is currently being tested in the main liquid stream process—where temperature and ammonia concentration is lower than sidestreams—to investigate design and operational parameters, the difficulty in inhibiting NOB growth, the risk of poor mixed liquor settling, and the increased risk of discharging highly toxic nitrite to the receiving stream. Mainstream nitritation/denitritation will be included in a future update of this report.

Process controls – The main process controls include the water temperature, SRT, pH, dissolved oxygen concentration, and the nitrite concentration. At temperatures above 20 °C, AOB have a faster growth rate than NOB. Operating at an SRT that is long enough to promote AOB growth but too short for NOB growth (i.e., 1 day) allows for proper control to stop the ammonia oxidation process at nitrite. The SHARON process operates as a chemostat without solids recycle as a process control but with a small volume to give a short HRT and SRT. This prevents an NOB population from developing but also limits the mass of heterotrophs and, therefore, the denitritation capacity. The Strass process includes solids retention control through the use of an SBR and is operated to provide a longer SRT (i.e., 20 days) to allow good denitritation. NOB inhibition is achieved through control of pH and nitrite concentration in the SBR using cyclical aeration. During the aeration interval, the pH drops because of acidification from the nitritation process. When the low pH setpoint is achieved, aeration stops so that denitritation can occur, which adds alkalinity, resulting in an increase in pH. The pH operating band is relatively narrow but can be kept below the optimal growth range for NOB. In addition, a low dissolved oxygen concentration in conjunction with a high nitrite concentration can be used during the aeration cycle to inhibit NOB growth.

Nitrogen Removal *prepared 2012* **Technology Summary**

Nitritation and Denitritation (Sidestream) (continued)

Comparison to Established Technologies:

The nitritation and denitritation process offers energy and carbon savings compared to conventional nitrification and denitrification processes. Up to 25 percent less oxygen and 40 percent less carbon are consumed compared to conventional nitrification and denitrification. Because less carbon is required, there is also less sludge production—as much as 40 percent less. According to European data, the average nitrogen removal efficiency is in the range of 85 to 95 percent. On average 70 percent of the nitrogen load is converted via nitrite. The nitritation and denitritation process has the following advantages: low investment and low operational costs, no chemical by-products, insensitive to high influent suspended solids levels, and negligible odor emission. Compared to bioaugmentation processes for sidestream treatment, the tankage requirements for nitritation are smaller, and the process is somewhat simpler to operate. Because nitritation-denitritation is less resource efficient than deammonification, the nitritation process is more attractive as part of the deammonification process.

Available Cost Information:

Approximate Capital Cost: Not disclosed by vendor.
Approximate O&M Costs: Not disclosed by vendor.

Vendor Name(s):

Grontmij UK (SHARON Process)
Grove House, Mansion Gate Drive
LS7 4DN Leeds, United Kingdom
Telephone:+44 113 262 0000 / +44 845 074 285
Email: enquiries.uk@grontmij.co.uk

Delft University of Technology (SHARON Process)
Dr. Ir. Mark van Loosdrecht Department of Biotechnology
Julianalaan 67
2628 BC Delft
The Netherlands
Telephone: 31-15-278 1618
Email: mark.vanLoosdrecht@tnw.tudelft.nl

Cyklar-Stulz (Strass SBR Process)
CH-8737 Gommiswald Rietwiesstrasse 39
Switzerland
Telephone: 41-55-290-11-41
Fax: 41-55-290-11-43
Email: info@cyklar.ch
Web site: http://www.cykar.ch

Installation(s):

SHARON Process
One full-scale application is under construction in Wards Island, New York City, NY. Six facilities are in operation worldwide

Wards Island, NY
Geneva, Switzerland
Paris, France
MVPC Shell Green, Manchester, U.K.
Whitlingham, Norwich, U.K.
Garmerwolde, Netherlands
Beverwijk, Netherlands
Rotterdam, Netherlands
Utrecht, Netherlands

Strass SBR Process
Strass, Austria (has now been converted to use the DEMON deammonification process)

Salzburg, Austria

Key Words for Internet Search:

Nitritation, denitritation, SHARON process, sidestream process, SBR Nitritation-Denitritation process

Nitrogen Removal *prepared 2012* **Technology Summary**

Nitritation and Denitritation (Sidestream) (continued)

Data Sources:

Ganigue, R., et al. "Impact of Influent Characteristics on a Partial Nitritation SBR Treating High Nitrogen Loaded Wastewater," Bioresource Technology, Vol. 111, pp. 62-69, 2012.

Hellinga C., et al., "The Sharon process: An innovative method for nitrogen removal from ammonium-rich waste water." Water Science and Technology, Vol. 37, No. 9, pp. 135-142, 1998.

Miot, A., and K.R. Pagilla, "Control of Partial Nitritation of Centrate in a Sequencing Batch Reactor," Water Environment Research, Vol. 82, No. 9, pp. 819-829, 2010.

Dosta, J. et al., "Operation of the SHARON Denitrification Process to Treat Sludge Reject Water Using Hydrolyzed Primary Sludge to Denitrify," Water Environment Research, Vol. 80, No. 3, pp. 197-204, 2008.

WEF Nutrient Removal Task Force, Nutrient Removal: WEF Manual of Practice No. 34, WEF Press, Alexandria, VA, 2010.

Wett, B., et al., "pH Controlled Reject Water Treatment," Water Science Technology, 1998.

Metcalf and Eddy, Wastewater Engineering Treatment and Reuse, 4th ed., 2003.

Communication with Mixing and Mass Transfer Technologies, May 2012.

Small Site *updated 2012* **Technology Summary**

Deep Shaft Activated Sludge/VERTREAT™

Objective:

Increased oxygen transfer in the activated sludge process to decrease power requirements, saving both capital and operating costs.

State of Development:

Innovative. Variations of this technology have been applied worldwide for more than 3 decades but it has not been widely adopted.

Description:

The Deep-Shaft Activated Sludge/VERTREAT™ process is a modification of the activated-sludge process. VERTREAT™ essentially uses a vertical "tank" or shaft in place of the surface aeration basins used in a conventional system. The result of this vertical configuration is a ten-fold increase in the dissolved oxygen content of the mixed liquor, which increases the level of biological activity in the bioreactor. The process can accommodate high-organic loading with lower aeration supply due to the enhanced oxygen transfer (a function of both increased pressure at depth and longer bubble-contact time).

Comparison to Established Technologies:

Reduced footprint requirements.
Lower power consumption and simple controls resulting in reduced O&M.
Much higher-rate system due to increased oxygen transfer in process.

Available Cost Information:

Approximate Capital Cost: $3 to $5 per installed design gallon of flow.
Approximate O&M Costs: Dependent on power costs. Roughly half the aeration power requirement due to increased oxygen-transfer efficiency. Lower maintenance costs as a result of having no pumps or diffusers in the core system.

Vendor Name(s):

NORAM Engineering and Constructors Ltd.
Suite 1800, 200 Granville Street
Vancouver, BC, Canada V6C 1S4
Telephone: 604-681-2030
Fax: 604-683-9164
Web site: www.noram-eng.com

Installation(s):

City of Homer – Public Works Department
3575 Heath Street
Homer, AK, USA 99603
Telephone: 907-235-3174
Fax: 907-235-3178
Email: jhobbs@ci.homer.ak.us

Key Words for Internet Search:

Deep shaft process, activated sludge, wastewater treatment, oxygen transfer, high rate, BOD, aerobic

Data Sources:

www.noram-eng.com

www.vertreat.com

Email communication with the vendor.

Solids Minimization *updated 2012* **Technology Summary**

Cyclic Metabolic Environment

Objective:

Biological treatment with decreased waste biosolids volume.

State of Development:

Innovative.

Description:

The Cannibal® process seeks to reduce solids production from biological wastewater treatment by adding an unaerated interchange tank to the process and cycling the biomass between the metabolic environments established in the interchange tank and the main bioreactor. A portion of sludge from the main treatment process is pumped to a sidestream interchange bioreactor where the mixed liquor is converted from an aerobic environment to a facultative environment. Some bacteria decay in the interchange reactor, while other bacteria break down and use the remains of the decaying organisms, their by-products, and anaerobically digestable organics. The bioreactor is periodically aerated to maintain dissolved oxygen at the transition between anoxic and anaerobic conditions. Mixed liquor from the bioreactor is recycled back to the main treatment process. There, other bacteria decay and are subsequently broken down. The process continues use of the alternating environments of the aerobic treatment process and the interchange bioreactor. An important step is the removal of inorganic materials by a solid-separation module (fine drum screen/hydrocyclone) on the return sludge line. All the return sludge is pumped through this module and recycled back to the main treatment process. Only a portion of this flow is diverted to the sidestream bioreactor for the selection and destruction process. The decreased wasting limits biological phosphorous removal in this process, but physiochemical removal via chemical addition has been successful when sludge wasting is adjusted to compensate. The interchange tank is typically open and thus can create odor issues if aeration rate and ORP are not carefully controlled. Reductions of 60 to 70 percent or more in sludge production have been reported. However other installations have not been able to achieve similar performance. Initial research to determine the cause of the performance differences has focused on the release of soluble chemical oxygen demand in the interchange tank, but the mechanism is still not well understood.

Comparison to Established Technologies:

Not similar to any established technology.

Available Cost Information:

Approximate Capital Cost: Not disclosed by vendor.
Approximate O&M Costs: Not disclosed by vendor.
According to the vendor, a 1.5-MGD WWTP could recognize an approximate net annual operating cost savings of $245,600 using the Cannibal process.

Vendor Name(s):

Siemens Industry, Inc. - Cannibal
Water Technologies
Telephone: 866-926-8420 or 724-772-1402
Web: www.water.siemens.com

Installation(s):

Cannibal

Approximately 60 installations have been completed since the inception of the process in 1998. Several installations have shut down for various reasons including odors. Current installations are being monitored by the manufacturer to meet performance guarantees.

Example municipal installations:

Columbia, SC
Cumming, GA
Peru, IN
Byron, IL
Lebanon, OR
Clovis, CA

Solids Minimization *updated 2012* **Technology Summary**

Cyclic Metabolic Environment (continued)

Albany/Millersburg, OR
Healdsburg, CA
Oregon, IL
Emporia, VA
Macomb, MS
Big Bear, CA
Morongo, CA
Thomasville, NC

Example industrial installation:

Alpine Cheese Factory, Holmes County, OH

Key Words for Internet Search:

Cannibal process, biosolids, sludge, Catabol process, Khudenko Engineering, metabolic solids reduction, interchange tank

Data Sources:

Sandino, J., and D. Whitlock, "Evaluation of Processes to Reduce Activated Sludge Solids Generation and Disposal," Water Environment Research Foundation, WERF Report 05-CTS-3, 2010.

Roxborough, R. et al., "Sludge Minimization Technologies—Doing More to Get Less," WEFTEC Proceedings, 2006.

Novak, J.T., et al., "Biological Solids Reduction using the Cannibal Process," Water Environment Research, Vol. 79, No. 12, pp. 2380–2386, 2007.

Sheridan, J., and B. Curtis, "Casebook: Revolutionary Technology Cuts Biosolids Production and Costs," Pollution Engineering, Vol. 36, No. 5, 2004.

Vendor-supplied information.

Solids Settleability *prepared 2012* **Technology Summary**

Magnetite Ballasted Activated Sludge

Objective:

Increase settling rates of activated sludge flocs and capacity of activated sludge processes without expansion of reactor volume.

State of Development:

Innovative.

Description:

The mixed liquor suspended solids concentration of a typical activated sludge process is limited to 3,500 to 6,000 mg/L depending on the loading rates and settleability characteristics of the biomass. Operating with mixed liquor concentrations above this range tends to overload the secondary clarifiers with respect to solids loading. Enhanced sedimentation activated sludge processes increase settling velocities and improve floc formation, thereby allowing for greater solids loadings at the secondary clarifiers while maintaining effluent quality. These improved settling characteristics allow for activated sludge systems to be operated at higher mixed liquor concentrations than typical activated sludge systems, providing increased biomass to treat larger loads or to maintain the longer solids retention time necessary for stable nitrification. Facilities can take advantage of this capability by reducing the required aerobic volume (because of the increased mixed liquor concentration) and converting the previously aerobic volume to anoxic or anaerobic treatment stages to provide nutrient removal in the same reactor volume.

Example Process – BioMag™

BioMag™: The BioMag™ process adds magnetite to the mixed liquor as a ballast to enhance settling characteristics. The magnetite is an inert and fully oxidized form of iron ore (Fe_3O_4), which increases the density of activated sludge flocs to increase settling rates by as much as 30 times conventional settling rates. The enhanced settling characteristics allow the activated sludge system to be operated at up to three times the mixed liquor concentration of conventional systems. The magnetite is added to the mixed liquor in a ballast mix tank. The majority of the magnetite remains with the biomass and is returned with the RAS. As sludge is wasted from the system, the waste activated sludge passes through a shear mill to liberate the magnetite before passing over a magnetic drum separator to recover the magnetite before sludge wasting. Approximately 95 to 99% of the magnetite is recovered in the process. The BioMag™ process is suitable for BOD, nitrogen, and biological phosphorus removal. This process was developed from the CoMag enhanced sedimentation process, which uses magnetite to improve settleability of raw wastewater for treating overflows or for tertiary removal of effluent suspended solids (see the process description in Chapter 2).

Comparison to Established Technologies:

Magnetite-ballasted activated sludge competes with conventional activated sludge and with other process enhancements that allow operation with increased biomass such as Integrated fixed-Film Activated Sludge and Membrane BioReactor. The main benefit of the magnetite-ballasted activated sludge process is its ability to enhance the capacity and nutrient removal performance of activated sludge systems without adding capital-intensive new tankage or energy-intensive operating costs. The aerobic granular sludge process (AGSP, e.g., Nereda) is another approach to increasing the density of biological solids.

Available Cost Information:

The primary applications for magnetite-ballasted active sludge are in upgrading municipal WWTPs and treating strong organic wastes from the food and beverage industry. Most of these applications involve integrating BioMag™ in an existing facility, thereby requiring custom solutions. As a result, prices are driven by multiple factors. Nonetheless, early experience has shown that BioMag™ capital and operating costs are comparable to or lower than competing solutions. For example, at the 5.5-MGD Easterly WWTP in Marlborough, MA, the capital cost to implement BioMag™ was estimated at $12.1 million (including structures), whereas implementing the tertiary ballasted sedimentation alternative was estimated at $16 million. Annual operating cost for BioMag™ was estimated at $740,000 versus $650,000 for the alternative.

Solids Settleability *prepared 2012* **Technology Summary**

Magnetite Ballasted Activated Sludge (continued)

Vendor Name(s):

Siemens Industry, Inc. - BioMag™
Water Technologies
Telephone: 866-926-8420 or 724-772-1402
Web: www.water.siemens.com

Installation(s):

BioMag™

Long Trail Brewing Company, Bridgewater Corners, VT
Allenstown, NH
Upper Gwynedd, PA
Sturbridge, MA
Easterly WWTP, Marlborough, MA
Mystic, CT
Taneytown, MD
Marlay Taylor WWTP, St. Mary's County, MD
Four SBR WWTP Upgrade, Berkeley County, WV
East Norriton-Plymouth WWTP, PA
Winebrenner, Cascade, MD

Key Words for Internet Search:

Magnetite Ballasted Activated Sludge, Siemens BioMag

Data Sources:

BioMag™

Siemens Water Technologies, www.water.siemens.com

Andryszak, R., et al., "Enhanced Nutrient Removal Upgrade of the Winebrenner Wastewater Treatment Plant Using BioMag™ Technology," WEFTEC Proceedings, 2011.

McConnell, W.C., et al., "FullScale Demonstration at the Mystic WPCF and Establishing the Basis-of-Design for a Permanent Installation," WEFTEC Proceedings, 2010.

Catlow, I., and S. Woodard, "Ballasted Biological Treatment Process Removes Nutrients and Doubles Plant Capacity," Proceedings WEF Nutrient Removal, 2009.

Madden, J., CDM, personal communication, 2010.

Nitrogen and Phosphorus Removal *prepared 2008* **Technology Summary**

Biological-Chemical Phosphorus and Nitrogen Removal (BCFS) Process

Objective:

Enhanced nutrient removal (nitrogen and phosphorus).

State of Development:

Adaptive Use.

Description:

The BCFS process has been developed to achieve low-nutrient effluent concentrations at relatively low Biochemical Oxygen Demand Ratio to Nitrogen (BOD/N) and Biochemical Oxygen Demand Ratio to Phosphorus (BOD/P) ratios in the influent. The process design is based on the University of Cape Town (UCT) process. In the process, the return sludge is introduced at the start of the anoxic zone to prevent the presence of nitrate in the anaerobic zone. Mixed liquor is recirculated from the end of the anoxic zone to the anaerobic zone. At the end of the anoxic zone, most of the nitrate is removed. In the anoxic zone, the phosphorus is taken up by phosphate-accumulating bacteria in the activated sludge. The anoxic phosphorus uptake results in a lower energy and BOD demand as well as lower sludge production.

Because of the different microorganisms involved in phosphorus and nitrogen removal, the retention times for both removal processes are different. For maximum nitrification and availability of COD for denitrification a long sludge-retention time is necessary. For biological phosphorus removal, usually shorter retention times are advantageous. In the BCFS process, long sludge-retention times that are favorable for the removal of nitrogen are preferred.

Comparison to Established Technologies:

The BCFS process achieves removal rates for BOD, nutrients, and suspended solids similar to other process designs based on the activated-sludge concept. With the BCFS process configuration, a stable and reliable operation is possible. It has been demonstrated that the biological phosphorus removal capacity is usually sufficient to comply with effluent standards. The settling characteristics of the activated sludge can be enhanced by implementing the BCFS process design. The compartmentalization of the process allows low and stable sludge volume index (SVI) to be achieved. At the Holten WWTP, SVI is reduced from 150 to 80 mL/mg. Chemical phosphorus removal is limited by kinetic factors as well as stoichiometric factors, and excessive inorganic precipitant requirements need to be reduced.

Available Cost Information:

Approximate Capital Cost: The capital costs for the implementation of a BCFS process in case of upgrading depend on the availability of existing tanks and equipment as well as local requirements and specific application. Actual costs are not disclosed.

Approximate O&M Costs: Not disclosed.

Vendor Name(s):

N/A

Installation(s):

Holten WWTP, The Netherlands

Key Words for Internet Search:

BCFS, nitrogen phosphorus nutrient removal

Data Sources:

Technical University of Delft, The Netherlands.

Waterboard Groot Salland, The Netherlands.

Nitrogen and Phosphorus Removal *prepared 2008* **Technology Summary**

Biological-Chemical Phosphorus and Nitrogen Removal (BCFS) Process (continued)

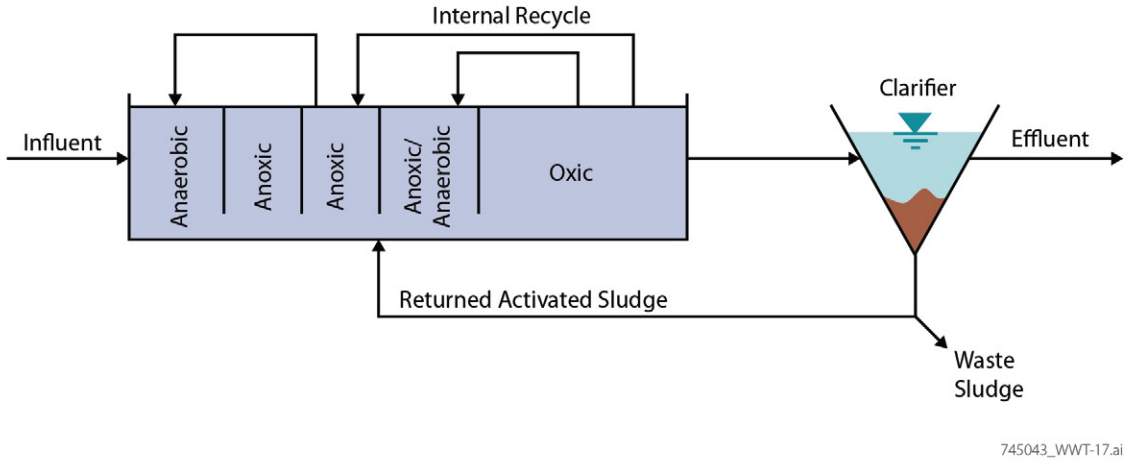

Process Flow Diagram for BCFS Process

Nitrogen and Phosphorus Removal *prepared 2008* **Technology Summary**

Modified University of Cape Town (MUCT) Process

Objective:

Enhanced removal of phosphorus and nitrogen from wastewater.

State of Development:

Adaptive Use.

Description:

The Modified University of Cape Town (MUCT) process provides efficient nitrogen removal by sending the RAS to the anoxic zone. The anaerobic reactor, is located upstream of two anoxic reactors. RAS is subjected to the first anoxic reactor stage. There is an internal recycle from the first anoxic reactor to the anaerobic reactor, and another internal recycle from the oxic reactor to the second anoxic reactor.

Comparison to Established Technologies:

The MUCT process is different from the UCT process. MUCT includes two anoxic stages in series. Influent wastewater is fed to the anaerobic reactor, which is located upstream of the anoxic reactors. Returned activated sludge (RAS) is returned to the first anoxic reactor. There is an internal recirculation from the first anoxic reactor to the anaerobic reactor. Removal of nitrogen in the aeration basin may vary from 40 to 100 percent and the effluent nitrate should be sufficiently low so as not to interfere with the anaerobic contact zone. Plug flow configuration of the aeration basin allows the anoxic zones in the first section of the plant to be low, while the endogenous oxygen demand at the end of the aeration basin and the DO level will increase to allow for the required nitrification and phosphate uptake. Nitrates not removed in the aeration basin will be recycled to the anoxic zone. Therefore, efficient overall nitrogen removal is achieved more economically.

Available Cost Information:

Approximate Capital and O&M Costs: Cost estimates are dependent upon local requirements and specific application and economy of scale applies. For example, uniform annual cost of a 100,000 GPD plant is estimated to be about $272,075 based on an interest rate of 6 percent for a 20-year period.

Vendor Name(s):

N/A

Installation(s):

King County South AWTP, WA

Key Words for Internet Search:

Modified UCT process, RAS anaerobic reactor

Data Sources:

"Design and Retrofit of Wastewater Treatment Plants for Biological Nutrient Removal," Water Quality Management Library, Volume 5, Second Edition, 1998.

Principles and Practice of Nutrient Removal from Municipal Wastewater, Lewis Publishers, Second Edition, 1991.

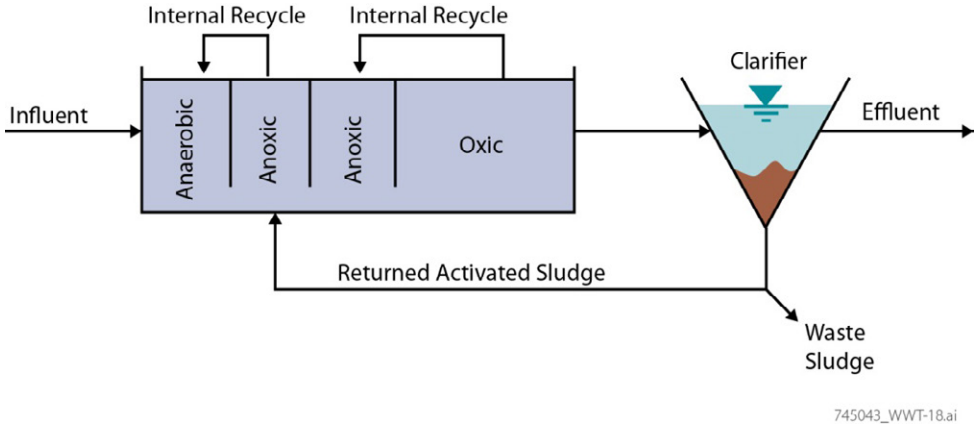

Process Flow Diagram for Modified UCT Process

Nitrogen and Phosphorus Removal *updated 2008* **Technology Summary**

Westbank Process

Objective:

Enhanced removal of phosphorus and nitrogen from wastewater.

State of Development:

Adaptive Use.

Description:

The Westbank Process is a version of the Three-Stage Bardenpho® but includes Returned Activated Sludge (RAS) denitrification to provide efficient phosphate and nitrogen removal. First, RAS is subjected to an anoxic stage to remove nitrates. While a fraction of the influent wastewater is sent to the anoxic reactor, the remaining portion is fed to the anaerobic reactor directly. There is also an internal recycle from the oxic reactor to the second-stage anoxic reactor.

Comparison to Established Technologies:

In the basic Three-Stage Bardenpho® process, the oxic reactor is in tandem with the anaerobic and anoxic reactors. RAS is returned to the anaerobic reactor and there is an internal recirculation from the oxic reactor to the anoxic reactor. The Westbank Process includes the anaerobic reactor sandwiched between the two anoxic reactors, with the oxic reactor downstream of the three stages.

Available Cost Information:

Approximate Capital and O&M Costs: Cost estimates are dependent upon local requirements and specific application and economy of scale applies. For example, uniform annual cost of a 100,000 GPD plant is estimated about $272,075 based on an interest rate of 6% for a 20-year period.

Vendor Name(s):

N/A

Installation(s):

Used in Kelowna WWTP, British Columbia, Canada

Key Words for Internet Search:

Westbank process, BNR, biological nutrient removal

Data Sources:

"Design and Retrofit of Wastewater Treatment Plants for Biological Nutrient Removal," Water Quality Management Library, Volume 5, Second Edition, 1998.

Principles and Practice of Nutrient Removal from Municipal Wastewater, Lewis Publishers, Second Edition, 1991.

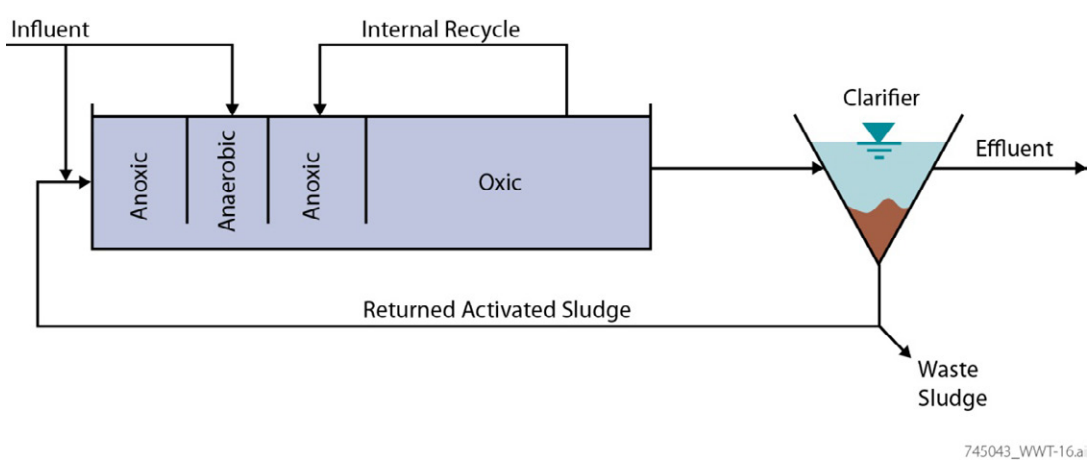

Process Flow Diagram for the Westbank Process

Phosphorus Removal *prepared 2008* **Technology Summary**

Modified Anaerobic/Oxic (A/O) Process

Objective:
Enhanced removal of phosphorus and nitrogen from wastewater.

State of Development:
Adaptive Use.

Description:
The modified A/O process provides phosphate and nitrogen removal. If nitrification is not required and the temperatures are not high, the simple two-stage, high-rate A/O process may be sufficient. However, with higher temperatures some nitrate formation cannot be avoided. Therefore, returned activated sludge (RAS) should be subjected to an anoxic stage to remove nitrates before mixing it with the influent wastewater.

Comparison to Established Technologies:
The simple high-rate A/O process uses an anaerobic reactor upstream of the oxic reactor. RAS is returned to the anaerobic reactor. The modified A/O process, however, includes an anoxic reactor downstream of the anaerobic reactor where only RAS is recycled. Influent wastewater is directly sent to the anaerobic reactor for phosphorus removal. There is an internal recirculation from the anoxic reactor to the anaerobic reactor.

Available Cost Information:
Approximate Capital Cost: Cost estimates are dependent upon local requirements and specific application and economy of scale applies. For example, uniform annual cost of a 100,000 GPD plant is estimated about $244,000 based on an interest rate of 6 percent for a 20-year period.
Approximate O&M Costs: Unknown

Vendor Name(s):
N/A

Installation(s):
Fayetteville AWTP, AR

Key Words for Internet Search:
High-rate A/O with RAS denitrification

Data Sources:
"Design and Retrofit of Wastewater Treatment Plants for Biological Nutrient Removal," Water Quality Management Library, Volume 5, Second Edition, 1998.

Principles and Practice of Nutrient Removal from Municipal Wastewater, Lewis Publishers, Second Edition, 1991.

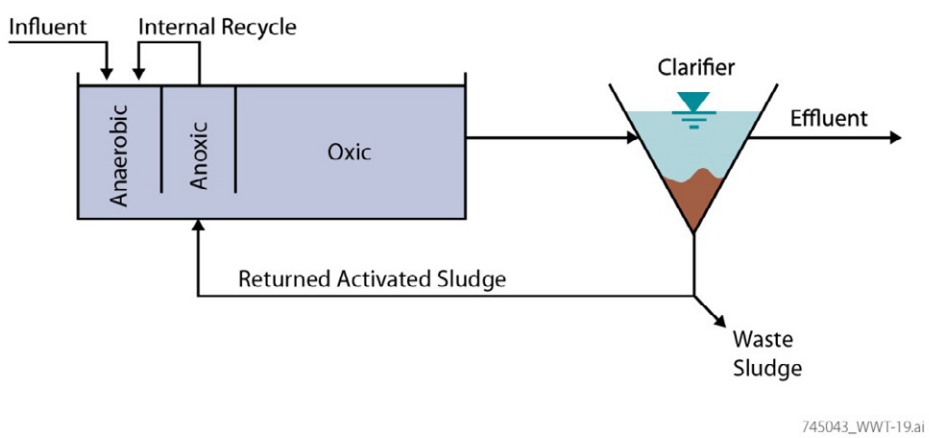

Process Flow Diagram for Modified Anaerobic/Oxic (A/O) Process

Membrane Processes *prepared 2012* **Technology Summary**

Membrane Biofilm Reactor (MBfR)

Objective:

Use of hollow membrane fibers to deliver gas (oxygen or hydrogen) to a surface biofilm for efficient removal of pollutant compounds (either reduced or oxidized).

State of Development:

Emerging.

Description:

The MBfR process reactor uses a bundle of hollow-fiber, composite membranes sealed on one end and submerged in the water to be treated. A gas is introduced inside the fibers and diffuses through to a biofilm that develops on the outside surface of the membrane. Because the gas permeates the membrane in the opposite direction than the water-based compounds, counter-gradients are established for the concentration of each, thus improving the efficiency of the gas use. MBfR membranes are hydrophobic so that the pores remain dry and use gas diffusion to prevent formation of gas bubbles. The gas pressure to the hollow fibers is an important and easily adjusted control mechanism. Only gas, not water, permeates the membranes. This significantly decreases the potential for membrane plugging. However, prevention of excessive biofilm growth on the outer membrane surface remains a concern.

MBfRs have been studied at the bench scale and tested at the pilot scale for a variety of drinking water and wastewater applications (Martin et al. 2011). Oxygen- or air-based reactors have successfully conducted concurrent nitrification and denitrification, high strength chemical demand oxidation, and decomposition of pharmaceuticals (Brindle et al. 1999; Downing and Nerenberg 2008; Kim et al. 2010; Semmens et al. 2003; Syron and Casey 2008). Alternatively, Hydrogen-based reactors safely treat oxidized contaminants including nitrate, perchlorate, bromate, selenate, and chlorinated solvents such as trichloroethylene (Chung et al. 2008; Nerenberg and Rittmann 2004; Terada et al. 2006).

When hydrogen gas is supplied—a technology also known as HFMBfR (Hydrogen-based hollow-Fiber Membrane Biofilm Reactor)—an autotrophic biofilm develops and uses hydrogen as its electron donor to reduce one or several oxidized contaminants acting as electron acceptor. This approach can be used for treating wastewater, groundwater, or drinking water. The process is effective in treating water with oxidized contaminants such as nitrate, perchlorate, chlorinated solvents, selenate, bromate, chromate, and radionuclides. When oxygen is supplied—a technology also known as MABR (Membrane Aerated Bioreactor)—a nitrifying biofilm can develop for ammonia removal. Systems with a blend of oxygen-supplied fiber bundles for nitrification and hydrogen-supplied fiber bundles for denitrification have been successfully operated in trials. Another approach to nitrogen removal uses an oxygen-supplied MBfR for nitrification with a suspended phase biomass for heterotrophic denitrification using the carbon in the wastewater or with an oxygen limitation so that the outer perimeter of the biofilm is anoxic and provides denitrification.

The technology involves bundles of membrane tubes at 50-330 µm diameter and up to nearly 1 meter long. For total nitrogen removal with air, TKN loading is up to 103 $mg/m^2/day$. With hydrogen supplied as the electron donor, nitrate-N can be removed at up to 1,300 $mg/m^2/day$. Details of MBfR design and operation are fully described in Martin and Nerenburg (2012).

Comparison to Established Technologies:

Although they sound somewhat similar, MBfRs differ from membrane bioreactors (MBRs) in that the membrane is used for gas delivery and biofilm support and does not act as a filter mechanism.

Available Cost Information:

Approximate Capital Cost: Too few installations to provide generalized cost estimate.
Approximate O&M Costs: Too few installations to provide generalized cost estimate.

Vendor Name(s):

APTWater

3333 Vincent Road, Suite 222

Installation(s):

No full installations are in the United States

Cucamonga Valley Water District, Rancho

Membrane Biofilm Reactor (MBfR) (continued)

Pleasant Hill, CA 94523
Telephone: 925-977-1811 or 1-888-307-2749
Fax: 925-977-1818
Email: info@aptwater.com
Web site: http://www.aptwater.com/

Cucamonga, CA, hydrogen gas used for nitrate removal (2012 startup)
Ojai Valley Sanitation District, Ojai, CA, a 29,000-gpd pilot facility was operated with hydrogen for nitrate removal in 2010

La Puenta, CA, pilot system

Key Words for Internet Search:

MBfr, HFMBfR, H-2 hydrogen based membrane biofilm reactor, MABR, membrane aerated bioreactor

Data Sources:

Martin, K.J., et al., "Multidimensional Modeling of the Hollow-Fiber Membrane Biofilm Reactor." Proceedings WEFTEC 2011, 3256-3271, 2011.

Brindle, K., et al., "Pilot-Plant Treatment of a High-Strength Brewery Wastewater Using a Membrane-Aeration Bioreactor." Water Environment Research, Vol. 71, No. 6, pp. 1197-1203, 1999.

Downing, L.S., and R. Nerenberg, "Total nitrogen removal in a hybrid, membrane aerated activated sludge process." Water Research, Vol. 42, No. 14, pp. 3697-3708, 2008.

Kim, J., et al., "Decompostion of pharmaceuticals (sulfamethazine and sulfathiazole) using oxygen-based membrane biofilm reactor." Desalination, Vol. 250, No. 2, pp. 751-756, 2010.

Semmens, M.J., et al., "COD and nitrogen removal by biofilms growing on gas permeable membranes." Water Research, Vol. 37, No. 18, pp. 4343-4350, 2003.

Syron, E., and E. Casey, "Membrane-Aerated Biofilms for High Rate Biotreatment: Performance Appraisal, Engineering Principles, Scale-up, and Development Requirements." Environmental Science & Technology, Vol. 42, No. 6, pp. 1833-1844, 2008

Chung, J., et al., "Bioreduction of Trichloroethene Using a Hydrogen-Based Membrane Biofilm Reactor." Environmental Science & Technology, Vol. 42, pp. 477-483, 2008.

Nerenberg, R., and B.E. Rittmann, "Hydrogen-based, hollow-fiber membrane biofilm reactor for reduction of perchlorate and other oxidized contaminants." Water Science and Technology, Vol. 49, No. 11-12, pp. 223-230, 2004.

Terada, A., et al., "Rapid autohydrogenotrophic denitrification by a membrane biofilm reactor equipped with a fibrous support around a gas-permeable membrane." Biochemical Engineering Journal, Vol. 31, No. 1, pp. 84-91, 2006.

Martin, K.J., and R. Nerenberg, "The membrane biofilm reactor (MBfR) for water and wastewater treatment: Principles, applications, and recent developments." Bioresource Technology, Vol. 122, pp. 83-94, http://dx.doi.org/10.1016/j.biortech.2012.02.110, 2012.

Robert Nerenberg, "Membrane Biofilm Reactors for Water and Wastewater Treatment," Proceedings Borchardt Conference: A Seminar on Advances in Water and Wastewater Treatment, 2005.

Hwang, J.H. et al., "Achieving biofilm control in a membrane biofilm reactor removing total nitrogen," Water Research, Vol. 44, No. 7, pp. 2283-2291, 2010.

Sahu, A.K., et al., "Onsite Wastewater Denitrification Using a Hydrogenotrophic Hollow-Fiber Membrane Bioreactor" Water Environment Research, Vol. 81, No. 7, pp. 680-686, 2009.

Syron, E., and E. Casey, "Membrane-Aerated Biofilms for High Rate Biotreatment: Performance Appraisal, Engineering Principles, Scale-up, and Development Requirements," Environmental Science & Technology, Vol. 42, No. 6, pp. 1833-1844, 2008.

Water Environment Research Foundation, WERF Report, Treatment Processes – Membrane Technology: Pilot Studies of Membrane-Aerated Bioreactors, Final Report, 2005. http://www.aptwater.com

http://www.uspto.gov/

Membrane Processes *updated 2012* **Technology Summary**

Vacuum Rotation Membrane (VRM®) System

Objective:

Ultrafiltration of biomass for high-quality effluent with a smaller footprint than activated sludge and a unique approach to cleaning of the membrane surface.

State of Development:

Emerging.

Description:

This membrane system employs flat-sheet, ultrafiltration-membrane segments configured into disks rotating on a horizontal shaft. The hydrophilic membrane has a pore size of approximately 38 nm. Sequential cleaning of the rotating membranes is achieved with scouring air introduced next to the shaft at about half the water depth, providing high-intensity scouring of 1/6 to 1/8 of the disk near the 12 o'clock position. The membranes rotate through the scouring section several times per minute. Operating results show that neither back-pulsing nor regular cleaning is required. Average flux is typically 8-12 gal/ft^2/day with a suction head of less than 10 feet. (Shear forces introduced by the rotational movement together with the high-intensity air scour remove solids buildup on the membranes to decrease membrane fouling. Chemical cleaning once or twice a year has shown to be sufficient for operating VRM plants.

Comparison to Established Technologies:

The VRM technology provides similar advantages as other MBR processes using ultrafiltration membranes. The unique feature of VRM is that the membranes are configured into disks rather than tubes or plates and that the disks are rotated for cleaning and to introduce shear forces for fouling control.

Available Cost Information:

Approximate Capital Cost: No U.S. applications from which to obtain cost information.
Approximate O&M Costs: No U.S. applications from which to obtain cost information.

Vendor Name(s):

Huber Technology, Inc.
9735 North Cross Center Ct, Suite A
Huntersville, NC 28078
Telephone: 704-949-1010
Email: filtration-reuse@hhusa.net
Web site: http://www.huber-technology.com

Installation(s):

The process is primarily marketed toward international industrial applications. There are 30 installations internationally, but none are in the United States.

Hans Kupfer & Sohn GmbH & Co.KG, Heilsbronn, Bavaria, Germany (meat processing)

Anheuser-Busch InBev, Löwen, Belgium (brewing)

GZM Extraktionswerk AG, Lyss, Switzerland (slaughtering by-products)

La Santa WWTP, Lanzarote, Spain

Key Words for Internet Search:

VRM, membrane bioreactor, wastewater, vacuum, rotation

Data Sources:

Schuler, S. "Operating Experience with Rotating Membrane Bioreactors", Water World, March 2009.

http://www.huber-technology.com

Nitrogen Removal *prepared 2012* **Technology Summary**

OpenCel Focused Pulse

Objective:

Waste activated sludge (WAS) reduction and generation of carbon source for denitrification.

State of Development:

Emerging.

Description:

OpenCel uses electrical pulses to disrupt WAS cell structure causing the cells to lyse. OpenCel focused pulse (FP) technology uses high-frequency micro-pulses of between 20 and 60 kV for no more than 0.1 second to cause the cell membrane to swell and rupture. Once ruptured, the WAS is more readily degradable by the active microorganisms. Bench scale research (Lee et al. 2010) shows that the semi-soluble COD of WAS increased by more than 26 times after OpenCel treatment compared with untreated WAS. If the WAS treated with OpenCel is fed to a digester, it degrades more completely, giving higher volatile solids destruction (therefore less biosolids yield) and generating more digester gas (if anaerobic). If fed to an anoxic zone, the ruptured cells become a source of readily biodegradable carbon for denitrification. The denitrification rate using OpenCel treated WAS has been shown to be approximately equal to the rate when using methanol as carbon source but does not include the dangers of methanol handling. Other research (Rittman et al. 2008) shows that full FP pretreatment should increase biogas production and biosolids removal by 60 and 40 percent, respectively. Note that WAS is approximately 6 to 10 percent nitrogen and 1 to 2 percent phosphorus (more if biological phosphorus removal is practiced). Much of that nitrogen and phosphorus is returned to the process when cells are ruptured.

Comparison to Established Technologies:

Other approaches to generating carbon for denitrification from biomass are based on the use of endogenous respiration and require increased solids retention time and, therefore, tank volume. External sources of carbon purchased specifically for denitrification will generally have no or little nitrogen. Cell lysis by OpenCel or endogenous respiration provides carbon but with about 8 percent nitrogen (proportional to the typical composition of bacteria). Other cell lysis technologies including sonication, MicroSludge, and Cambi are used to improve digestion of sludge but have not been applied to generate carbon within the activated sludge process.

Available Cost Information:

No cost information is available because of the lack of full-scale installations.

Vendor Name(s):

OpenCEL, LLC

900 Circle 75 Parkway, Suite 1330
Atlanta, GA 30339
Telephone: 847-835-7418
Fax: 847-835-7423
Email: info@opencel.com

Installation(s):

Lancaster, OH – pilot

Mesa, AZ – full-scale demonstration

Key Words for Internet Search:

Focused pulse, OpenCel, carbon source

Data Sources:

Sandino, J., and D. Whitlock, “Evaluation of Processes to Reduce Activated Sludge Solids Generation and Disposal,” Water Environment Research Foundation (WERF) Report No. 05-CTS-3, 2010.

Lee, Il-Su, et al. “Feasibility of Focused-Pulsed Treated Waste Activated Sludge as a Supplemental Electron Donor for Denitrification,” Water Environment Research Vol. 82, No. 12, pp 2316-2324, 2010.

Salerno, M.B. et al. “Using a Pulsed Electric Field as a Pretreatment for Improved Biosolids Digestion and Methanogenisis,” Water Environment Research Vol. 81, No. 8, pp 831-839, 2009.

Rittman, B.E., H. Lee, J. Alder, J.E. Banaszak, and R. Lopez. .2008. Full-Scale Application of Focused-Pulsed Pretreatment for Improving Biosolids Digestion and Conversion to Methane. Water Science and Technology Vol. 58, No. 10, pp 1895–1901.

Nitrogen and Phosphorus Removal *prepared 2012* **Technology Summary**

Integrated Fixed-film Activated Sludge (IFAS) Systems with Biological Phosphorus Removal

Objective:

This treatment process aims at increasing the biomass in a biological phosphorus removal process without increasing the suspended solids concentration or solids loading to the clarifier.

State of Development:

Emerging.

Description:

The IFAS hybrid processes include any activated sludge system that has some type of fixed/film media in a suspended growth reactor to increase the amount of biomass available for treatment. The IFAS media can be retrofitted into existing activated sludge systems and lagoons. There are two major types of IFAS: (1) Submerged Mobile Media IFAS and (2) Submerged Fixed Media IFAS. The media material varies but is usually a plastic carrier, sponge carrier, or knitted matrix. Mobile media is retained by screened baffle walls and can be allowed to migrate over the entire basin volume or can be retained in specific zones by multiple baffle walls.

An important feature of the IFAS process is that it provides the capability to decouple the solids retention time (SRT) of the suspended biomass from the SRT of the biomass attached to the IFAS media. This feature is especially useful with processes that must nitrify and perform enhanced biological phosphorus removal (EBPR) because the optimal SRT for EBPR is short (< 5 days) while the optimal SRT for nitrification is generally longer (> 8 days) depending on wastewater temperature. Research (Onnis-Hayden et al. 2011) has shown that the majority (> 90%) of the EBPR capability is associated with the suspended biomass, but most of the nitrifying capability (> 70%) is associated with the biomass attached to the IFAS media. This segregation of EBPR and nitrifying organisms allows the suspended phase to be controlled to a short SRT without concern that the nitrifying capability of the system will decline or that nitrifier washout will occur. It also retains the bulk of the nitrifier population in the aerobic zone(s) thereby reducing the nitrifier fraction in the anaerobic and anoxic zones where the nitrifiers are ineffective.

Comparison to Established Technologies:

The advantage of IFAS over a conventional activated-sludge plant is that IFAS could allow significant expansion without additional aeration basins by increasing biomass without increasing suspended solids concentration. This is a particular benefit when biological nutrient removal is required and allows some basin volume to be converted to anoxic (for denitrification) and/or anaerobic (for EBPR) conditions without a proportional reduction in the quantity of biomass under aeration. Using IFAS with EBPR provides phosphorus removal that would otherwise be attained with metal salt addition and precipitation or some other non-biological process

Key Words for Internet Search:

IFAS, EBPR, fixed film, BNR

Data Sources:

Onnis-Hayden, A., N. Majed, A. Schramm, and A.Z. Gu. “Process Optimization by Decoupled Control of Key Microbial Populations: Distribution of Activity and Abundance of Polyphosphate-Accumulating Organisms and Nitrifying Populations in a Full-Scale IFAS-EBPR Plant,” Water Research Vol. 45, No. 13, pp 3845-3854, 2011

Solids Minimization *prepared 2008* **Technology Summary**

Multi-Stage Activated Biological Process (MSABP™)

Objective:

Carbon oxidation, nitrification, and denitrification.

State of Development:

Emerging.

Description:

The Multi-Stage Activated Biological Process (MSABPTM) is a method of domestic and industrial wastewater treatment based upon spatial succession of microorganisms by trophic level. The spatial segregation provides conditions at which bacteria are used as food source sequentially by first primary and then higher level microorganisms in the food chain. Apparently, the spatial microorganism succession provides treatment by aerobic and anaerobic microorganisms maintained at different stages of the biological reactor.

There are eight compartments in the biological reactor. The influent wastewater enters the first compartment and travels through the each compartment circulating via the flow pattern created by air diffusers located at the bottom of the tank. Wastewater flow is in a looping pattern so that short circuiting is reduced. Removal of organics and nitrification take place in the first four compartments. Fifth and sixth compartments are anoxic and denitrification occurs in these compartments. Usually 80 percent of the BOD is reduced in these compartments leaving about 20 percent available for nitrification and denitrification processes. The seventh and eighth compartments operate in endogenous phase and digest remaining volatile solids.

Comparison to Established Technologies:

The vendor claims that no waste-activated sludge is generated in this system. Total number of compartments and size are based on the influent wastewater characteristics and treatment goals.

Available Cost Information:

Approximate Capital Cost: Dependent upon local requirements and specific application.
Approximate O&M Costs: Not disclosed by vendor.

Vendor Name(s):

Aquarius Technologies, Inc.
1103 Mineral Springs Drive, Suite 300
Port Washington, WI 53074
Telephone: 262-268-1500
Fax: 262-268-1515
Email: info@aquariustechnologies.com

BioScape Technologies, Inc.
Tim Bossard, Jack Akin
816 Bennett Avenue
Medford, OR 97504
Telephone: 541-858-5774
Fax: 541-858-2771
Email: info@bioscapetechnologies.com

Installation(s):

Beijing Eizen Lubao Oil Co., China
Johnson and Johnson Ltd., China
Salatey Shamir Foods, Israel
Pigs grow farm, Spain
Marugan WWTP, Spain
Delta Textile Factory, Israel
Shtrauss Dairy Foods, Israel

Key Words for Internet Search:

Multi-Stage Activated Biological Process, MAB, MSABP™

Data Sources:

http://www.aquariustechnologies.com/

http://www.bioscapetechnologies.com/index.html

Solids Settleability *prepared 2012* **Technology Summary**

Aerobic Granular Sludge Process (AGSP)

Objective:

Aerobic biological treatment process that generates dense sludge pellets, thereby providing highly efficient sold-liquid separation.

State of Development:

Emerging.

Description:

It has been demonstrated that granular sludge has improved settling characteristics, facilitating highly efficient solid-liquid separation. Compact structured and biologically efficient aerobic sludge granules with wide diverse microbial species have been developed and shown to exhibit excellent settleability, high biomass retention, and tolerance to toxicity (Adav et. al., 2008). With high biomass retention and biological activity, a granular sludge reactor can be operated at higher biomass concentrations, allowing higher loading rates while maintaining the longer solids retention time necessary for stable nitrification and providing anoxic and anaerobic micro-environments in the sludge granules if desired for nutrient removal. To achieve granulation under aerobic process conditions, short settling times are used to introduce a strong selective advantage for well-settling sludge granules. Poor-settling biomass is washed out under these conditions. Granular sludge process research and application has primarily used a sequencing batch reactor (SBR) configuration. Similar to conventional applications of the SBR concept, one treatment cycle in the AGSP reactor has four well-defined phases. These are filling, mixing/aerating, settling, and decanting. Batch feeding of the reactor induces a high-substrate concentration at the beginning of a treatment cycle. Because of a high concentration gradient, substrate can diffuse deeply into the granules preventing starvation of bacteria in the granules. With insufficient feeding (diffusion gradient), the bacteria at the center of the granules will be starved and weakened, which eventually leads to the granules' disintegration. In general, the size of the granules increases until the formation of stable granules is limited by substrate diffusion. Less stable granules are susceptible to shear forces and shrink or disintegrate. Weakened biomass in the granule center also decreases the granule density and inhibits settling processes, causing washout. Thus, a dynamic equilibrium eventually is reached between substrate concentration and the average diameter of granules. It has been observed that high-shear forces under turbulent flow conditions give selective advantage to the formation of stable granules. Research has shown that nitrogen removal rates of more than 80 percent seem feasible (Tsuneda et al., 2006). While nitrification takes place in the outer, aerobic layer of the granules, denitrification occurs in the anoxic core of the granules with the necessary carbon source being supplied by substrate diffused into the granules.

The first pilot research project using aerobic granular technology was performed in the Netherlands using the Granular Sequencing Batch Reactor in a system called Nereda™ (de Bruin et al., 2005). The project designed for simultaneous BOD, nitrogen and phosphorus removal was successful and exhibited an SVI of 55 mL/g VSS, well below typical values of 100-200 mL/g VSS. The first full scale Nereda™ installation began operating in Epe Netherlands in May 2012 and will be the first opportunity to gain experience with the effect of hydrodynamic conditions at full scale on granule formation and stability.

Example Process – Nereda™

Comparison to Established Technologies:

Because they operate at higher biomass concentrations, settle at a high rate, and do not require separate clarifiers, Nereda process applications require only about one-quarter of the space required by conventional activated sludge installations. Granular sludge was initially developed under anaerobic operating conditions because granules do not develop readily under aerobic conditions. To form aerobic granules, the AGSP is most often configured and operated as an SBR. This allows the high initial loading to develop adequate driving force for diffusion of substrate into the granules and the control of settling and decanting times that is necessary to select for the microorganisms that will develop granules under aerobic conditions. Further development of the aerobic granular-sludge technology can result in the application of enrichment reactors to generate the desired granular biomass.

Solids Settleability *prepared 2012* **Technology Summary**

Aerobic Granular Sludge Process (AGSP) (continued)

Available Cost Information:

There is too little experience with Nereda or other AGSP applications to allow reliable cost generalization.

Vendor Name(s):

Nereda™ – DHV Water BV
P.O. Box 1132
3800 AL Amersfoort
The Netherlands
Telephone: 0031-33-468-22 00
Fax : 0031-33-468-28 01
Email: andreas.giesen@dhv.nl
Website: http://www.dhv.com

AGSP – Delft University of Technology
Department of Biotechnology
Environmental Biotechnology Group
Delft, The Netherlands
Telephone: 31-15-278-1551
Email: m.dekreuk@tnw.tudelft.nl
Web site: www.bt.tudelft.nl

Installation(s):

Nereda™
The first full-scale municipal Nereda process was commissioned at Epe, Netherlands in May 2012. Four others facilities are being designed or constructed for sites in the Netherlands, South Africa, and Poland. No installations are in the United States

Key Words for Internet Search:

Nereda, aerobic granular sludge process

Data Sources:

http://www.neredannop.nl/english/

DHV Web site, http://www.dhv.com

López–Palau, S., J. Dosta, and J. Mata-Álvarez J. “Start-up of an aerobic granular sequencing batch reactor for the treatment of winery wastewater.” Water Science and Technology, Vol. 60, No. 4, pp. 1049-1054, 2009

Adav S.S., Lee D., Show, K., Tay J., Aerobic Granular Sludge: Recent Advances. Biotechnology Advances, Vol. 26 pp. 411-423, 2008. Tsuneda, S., Ogiwara M., Ejiri Y., and A. Hirata. “High-rate nitrification using aerobic granular sludge.” Water Science and Technology Vol. 53, No. 3, pp. 147-154, 2006.

Cassidy D.P. and E. Belia. “Nitrogen and phosphorus removal from an abattoir wastewater in a SBR with aerobic granular sludge.” Water Research Vol. 39, No. 19, pp. 4817–4823, 2005.

De Bruin, L. M. M., van der Roest, H.F.R., de Kreuk, M., van Loosdrecht, M.C.M., Promising Results Pilot Research Aerobic Granular Sludge Technology at WWTP Ede, in Aerobic Granular Sludge, IWA Publishing, London, U.K., pp 135-142, 2005.

Qin, L., Y. Liu, and J-H Tay. “Effect of settling time on aerobic granulation in sequencing batch reactor.” Biochemical Engineering Journal, Vol. 21, No. 1, pp. 47–52, 2004.

de Bruin, L.M.M., M.K. de Kreuk, H.F.R. van der Roest, C. Uijterlinde, and M.C.M. van Loosdrecht. Aerobic granular sludge technology: An alternative to activated sludge. Water Science and Technology, Vol. 49, Nos. 11-12, pp. 1–7, 2004.

Arrojo, B., A. Mosquera-Corral, J.M. Garrido, and R. Méndez. “Aerobic granulation with industrial wastewater in sequencing batch reactors.” Water Research, Vol. 38, Nos. 14-15, pp. 3389–3399, 2004.

Solids Settleability *prepared 2012* **Technology Summary**

Aerobic Granular Sludge Process (AGSP) (continued)

De Kreuk, M.K. and M.C.M. Van Loosdrecht. “Selection of Slow Growing Organisms as a Means for Improving Aerobic Granular Sludge Stability,” Water Science Technology, 49, pp. 11–12 and 9–19, 2004.

Tay, J.-H., Q.-S. Liu, and Y. Liu. The effects of shear force on the formation, structure and metabolism of aerobic granules. Applied Microbiology and Biotechnology, Vol. 57, Nos. 1-2, pp. 227–233, 2001.

Etterer, T. and P. A. Wilderer. “Generation and Properties of Aerobic Granular Sludge,” Water Science Technology,pp. 3–43, 2001.

Beun, J.J., A. Hendriks, M.C.M. Van Loosdrecht, E. Morgenroth, P.A. Wilderer, and J.J. Heijnen. “Aerobic granulation in a sequencing batch reactor.” Water Research, Vol. 33, No. 10, pp. 2283–2290, 1999.

Morgenroth, E., T. Sherden, M.C.M. Van Loosdrecht, J.J. Heijnen, and P.A. Wilderer. “Aerobic Granular Sludge in a Sequencing Batch Reactor,” Water Resources, Vol. 31, No. 12, 1997.

Anaerobic Processes *updated 2012* **Technology Summary**

Anaerobic Migrating Blanket Reactor (AMBR)

Objective:

Improve wastewater treatment efficiency.

State of Development:

Research (for municipal applications).

Description:

AMBR is an anaerobic process that uses a blanket of granular biomass and produces biogas. The granular biomass allows for operation at very long solids retention times so the AMBR process can be operated at ambient temperatures that would require heating for non-granular, anaerobic processes at shorter solids retention times. AMBRs use multiple tanks in series (a minimum of three) with gentle mixing in each to enhance transport of substrate into the granules. No recycle is required. The serial configuration causes the biomass to migrate toward the final tank, which, because it has the lowest concentration of substrate, produces little biogas, thereby allowing it to act as an internal clarifier with settling of the granular biomass. Because the final tank allows the less dense biomass to escape while retaining granular biomass, it effectively selects for biomass that is granular. To prevent excessive accumulation of biomass in the final tank, the flow of wastewater is reversed periodically by alternating the influent feed and effluent withdrawal points, thereby redistributing biomass toward the other end of the reactor. The simple design, lack of heating, and the low biomass production typical of anaerobic processes combine to make AMBR highly efficient operationally. Bench-scale testing has shown the AMBR process to achieve 59 percent removal of COD from nonfat dry milk at 15 °C, with improved removal of 80 to 95 percent at 20 °C (Angenet, 2001). Therefore, although the AMBR process could be a viable process for pretreating industrial wastewater, at domestic wastewater treatment facilities it would likely need to be combined with a downstream aerobic process for effluent polishing.

The AMBR process has been applied at a full-scale installation for remediation of dairy wastes and in trials for remediation of perchloroethylene (PCE), p-Nitrophenol, and other groundwater contaminants. Research has been performed to simulate treatment of domestic wastewater using AMBR (Angenent et al., 2001); however, no full scale installations are now in place.

Comparison to Established Technologies:

AMBR is an anaerobic process using a blanket of granular biomass similar to that developed in upflow anaerobic sludge blanket (UASB) reactors. Unlike the UASB process, AMBRs do not require the use of elaborate gas-solids separators and feed distribution systems. Flow reversal is sufficient to contain the granular biomass in the bioreactor so the use of packing or external settlers for solids capture is not required. Like other anaerobic processes, the AMBR process produces biogas, but unlike most other anaerobic processes, it requires no heating. Because it also does not require aeration, the AMBR process is more energy efficient than aerobic processes. It also produces less waste sludge than aerobic processes. However, effluent quality is marginal compared to aerobic processes and might require the use of a smaller aerobic process downstream of the AMBR process to meet discharge limits. Nutrient removal is minimal.

Available Cost Information:

Approximate Capital Cost: Unavailable because no full-scale facility is in place.
Approximate O&M Costs: Unavailable because no full-scale facility is in place.

Vendor Name(s):

Developer

Largus (Lars) Angenent
Cornell University
Dept of Biological and Environmental Engineering
214 Riley-Robb Hall
Ithaca, NY 14853
Telephone: 607-255-2480
Fax: 607-255-4080
Email: la249@cornell.edu
Web site: http://angenent.bee.cornell.edu

Installation(s):

Full-scale industrial application in Costa Rica was shut down. No full-scale installation is in place.

Anaerobic Processes *updated 2012* **Technology Summary**

Anaerobic Migrating Blanket Reactor (AMBR) (continued)

Patent holder

Iowa State University Research Foundation, Inc.

Ames, IA

Key Words for Internet Search:

AMBR, anaerobic migrating blanket reactor, anaerobic sludge blanket

Data Sources:

Kuscu, O. S., and D.T. Sponza, "Application of Box-Wilson experimental design method for 2,4-dinitrotoluene treatment in a sequential anaerobic migrating blanket reactor (AMBR)/aerobic completely stirred tank reactor (CSTR) system," Journal of Hazardous Materials, Vol. 187, No. 1-3, pp. 222-234, 2011.

Kuscu, O.S., and D.T. Sponza, "Effect of increasing nitrobenzene loading rates on the performance of anaerobic migrating blanket reactor and sequential anaerobic migrating blanket reactor/completely stirred tank reactor system," Journal of Hazardous Materials, Vol. 168, No. 1, pp. 390-399, 2009.

Angenent, L.T., and S. Sung, "Development of Anaerobic Migrating Blanket Reactor (AMBR), A Novel Anaerobic Treatment System," Water Research, Vol. 35, No. 7, pp. 1,739–1,747, 2001.

Angenent, L.T., et al., "Anaerobic Migrating Blanket Reactor Treatment of Low-Strength Wastewater at Low Temperatures," Water Environment Research, Vol. 73, No. 5 pp. 567-574, 2001.

Metcalf and Eddy, Wastewater Engineering Treatment and Reuse 4th ed., pp 1017-1018, 2003.

Telephone conversation with Lars Angenent, August 2004.

Correspondence with Lars Angenent, August 2012.

Anaerobic Processes *updated 2012* **Technology Summary**

Anaerobic Membrane BioReactor (An-MBR)

Objective:

Anaerobic treatment combined with membrane filtration of biomass to improve effluent quality.

State of Development:

Research (for municipal applications).

Description:

The An-MBR process is a promising process with the potential for energy-efficient treatment of municipal and industrial wastewaters. It couples an anaerobic biological process with a membrane for liquid/solids separation. The anaerobic process removes organic material [Chemical Oxygen Demand (COD)] without aeration by converting it to methane gas and a small amount of new biomass. The membrane is usually of pore size classified as microfiltration (retains particles > 0.1 µm, or ultrafiltration (retains particles > 0.01 µm) so does not allow even individual microbial cells to pass through with the permeate. The process is energy efficient and minimizes sludge management requirements. Consequently, it is particularly desirable for treating high-strength wastes that can be costly when treated aerobically. Although anaerobic processes are most often operated at warm temperatures to increase rate, An-MBRs have recently been shown to perform adequately at 15°C (Raskin et al. 2012). This is because the membrane allows for operation at high solids concentrations and therefore high solids retention times to compensate for the low growth rate. The membrane also retains the poorly settleable solids typical of traditional anaerobic processes thereby improving effluent quality. One recent study (Raskin et al. 2012) found an average permeate COD concentration of 36 mg/L and Biological Oxygen Demand after 5 days (BOD5) below 30 mg/L. Although some amount of membrane fouling improves organic removal, excessive fouling can be controlled by back flushing and biogas sparging. Membrane fouling has been shown to be controlled if membranes are placed directly in contact with granular activated carbon (GAC) in a fluidized bed MBR and a high quality effluent (5 mg/l BOD and zero TSS) could be produced (Kim et al. 2011). This research was done at a small scale, in a warm climate and it did not address long-term membrane fouling problems. Nevertheless, it estimated a significant decrease in secondary process energy use in addition to significant methane production. Recent An-MBR research was also done at the University of Michigan (WERF 2012) on both synthetic wastewater and municipal wastewater at temperatures down to 15 degrees C and using biogas sparging to minimize membrane fouling. Effluent BOD of less than 30 mg/l was achieved for extended periods of time. Further research is needed on optimizing process performance at low temperatures and demonstrating performance at pilot and full scale.

An-MBRs are operated at elevated temperatures to pretreat high-strength wastes before additional aerobic treatment but also show real potential for complete treatment of domestic wastewater COD. Nutrient removal is minimal.

A significant proportion of the methane produced is dissolved in the effluent. This will typically be stripped out of the effluent and emitted to the atmosphere to reduce the concentration of methane in the effluent. Because methane is a significant greenhouse gas, the emissions from this should be considered.

Comparison to Established Technologies:

The An-MBR process is similar to an aerobic MBR facility except that the biological process is anaerobic. Therefore the An-MBR requires less energy, generates biogas, and produces less waste biomass than an aerobic MBR. Although most anaerobic processes are operated at > 25°C, including a membrane allows the An-MBR process to be operated at temperatures more typical of domestic wastewater without heating (< 20°C). Much like in an MBR, the membranes in the An-MBR are back flushed with permeate but rather than also being sparged with air as in the MBR, the An-MBR membranes are sparged with the biogas produced in the process. As is typical with the MBR, the membranes have a limited life in that mineral deposits, cell material, and other compounds will progressively foul the membrane irreversibly until adequate flux can no longer be recovered. Unlike aerobic processes (including MBRs) anaerobic processes are not effective for transformation of ammonia or for nutrient removal.

Anaerobic Processes *updated 2012* **Technology Summary**

Anaerobic Membrane BioReactor (An-MBR) (continued)

Available Cost Information:

Approximate Capital Cost: Highly dependent on waste stream flow.
Approximate O&M Costs: Not available.

Vendor Name(s):

Veolia Water Solutions and Technologies

Biothane Americas
2500 Broadway
Camden, NJ 08104
Telephone: 856-541-3500
Fax: 856-541-3366
Email: sales@biothane.com

ADI Systems Inc.
P.O. Box 397
7 Pointe Sewall Road
Wolfeboro, NH 03894
Telephone: 603-569-0955
Fax: 603-569-0957
Email: systems@adi.ca
Web site: www.adisystemsinc.com

Installation(s):

Industrial:
More than a dozen industrial installations worldwide

Food industry:
Ken's Foods, Marlborough, MA
Valley Queen Cheese, Milbank SD
Daisy Brand, Garland Texas
Holmes Cheese, Millersburg, OH (2012 start-up)
Undisclosed food processor, Kentucky (2012 start-up)

Biofuel industry:
Komers International, Goszyn, Poland
Undisclosed US biodiesel facility (2012 start-up)

Domestic:
No known full-scale An-MBR systems are in operation to treat municipal wastewater.

Key Words for Internet Search:

Anaerobic Membrane Bioreactor, An-MBR

Data Sources:

Raskin, L., et al., "Anaerobic Membrane Bioreactors for Sustainable Wastewater Treatment," (WERF Project U4R08), WERF, 2012.

J. Kim et al., "Anaerobic Fluidized Bed Membrane Bioreactor for Wastewater Treatment," Environmental Science and Technology Vol. 45, pp. 576–581, 2011.

Ahlem Saddoud, Mariem Ellouze, Abdelhafidh Dhouib, Sami Sayadi, "Anaerobic membrane bioreactor treatment of domestic wastewater in Tunisia," Desalination, Vol. 207, pp. 205-215, 2007.

Membrane Bioreactors for Anaerobic Treatment of Wastewaters, WERF Project 02-CTS-4 Phase 1 Report, 2004.

Membrane Bioreactors for Anaerobic Treatment of Wastewaters, WERF, Phase 2 Report, 2004.

Preliminary Investigation of an Anaerobic Membrane Separation Process for Treatment of Low Strength Wastewaters, WERF, 2004

Fuchs, W., H. Binder, G. Mavrias, and R. Braun. "Anaerobic treatment of wastewater with high organic content using a stirred tank reactor coupled with a membrane filtration unit", Water Research Vol, 37, pp. 902–908, 2003.

Electricity Generation *prepared 2012* **Technology Summary**

Microbial Fuel Cell (MFC) Based Treatment System

Objective:

Use bacteria to generate electricity while providing biological wastewater treatment.

State of Development:

Research.

Description:

An MFC is a device that generates electricity from bacterial metabolism of organic matter (which is measured as chemical oxygen demand in wastewater). During the final stage of bacterial metabolism, electrons are passed along the cell membrane and deposited onto a terminal electron acceptor, usually oxygen. Under anaerobic conditions, bacteria must use an alternative electron acceptor like sulfate, nitrate, or—as is the case with an MFC—an electrode. In an MFC, bacteria are grown under anaerobic conditions and they transfer their electrons externally to an anode. Electrons flow from the anode to a positively charged cathode through an external circuit; this flow of electrons represents an electrical current. The cathode is exposed to oxygen and protons (H+) that chemically react with the incoming electrons to form water. MFC research is focused on the design of the fuel cell including the number of chambers and their layout; electrode size (surface area), spacing, materials, and quantity; alternatives to and composition of proton exchange membranes; and affordable cathode catalysts. Biological research is being done to identify bacterial species that optimize the process and to better understand how they transfer electrons externally. A modified MFC that generates pure hydrogen gas for use with hydrogen fuel cells is also being studied. In this approach, no oxygen is supplied at the cathode. Instead, a small amount of voltage is added to the circuit to facilitate the chemical formation of hydrogen gas (instead of water). Recent advances in MFC research have achieved substantial increases in MFC power production compared to previous designs. While still an emerging technology that is being studied at the laboratory-level, some day MFCs might be capable of producing enough electricity to operate a wastewater treatment plant and perhaps even an excess that could be sold back to the grid.

Comparison to Established Technologies:

Not comparable to any established wastewater treatment technology.

Available Cost Information:

Approximate Capital Cost: Not disclosed by the vendor.
Approximate O&M Costs: Not disclosed by the vendor.

Vendor Name(s):

Research projects at universities:

Dr. Bruce Logan
Pennsylvania State University
Hydrogen Energy Center
231Q Sackett Building
University Park, PA 16802
Telephone: 814-863-7908
Email: blogan@psu.edu

Installation(s):

No installations are in the United States.

Electricity Generation *prepared 2012* **Technology Summary**

Microbial Fuel Cell (MFC) Based Treatment System (continued)

Dr. Lars Angenent
Cornell University
Department of Biological and Environmental Engineering
214 Riley-Robb Hall
Ithaca, NY 14853
Telephone: 607-255-2480
Email: la249@cornell.edu

Key Words for Internet Search: It is time to close out the grant (it expired at the end of 2012).
Anaerobic Membrane Bioreactor, An-MBR

Data Sources:

Yanzhen, F., et al., "Improved performance of CEA microbial fuel cells with increased reactor size," Energy & Environmental Science, Vol. 5, No. 8, pp. 8273-8280, 2012.

Logan, B.E., and K. Rabaey. "Conversion of wastes into bioelectricity and chemicals using microbial electrochemical technologies," Science, 337:686-690, 2012.

Cusick, R.D., et al. "Performance of a pilot-scale continuous flow microbial electrolysis cell fed winery wastewater," Applied Microbiolical Biotechnolofy, Vol. 89, No. 6, pp. 2053–2063, 2011.

Fornero, J., et al., "Electric power generation from municipal, food, and animal wastewaters using microbial fuel cells," Electroanalysis, Vol. 22, pp. 832, 2010.

Ahn, Y., and B.E. Logan. "Domestic wastewater treatment using microbial fuel cells and electrical energy production," Bioresource Technolofy, Vol. 101, No. 2, pp. 469-475, 2009.

Fornero, J.J., et al. "Microbial fuel cell performance with a pressurized cathode," Environmental Science and Technology, Vol. 42, p. 8578, 2008.

Logan, B.E., Microbial Fuel Cells, John Wiley & Sons, New York, 2008.

Logan, B.E., "Extracting Hydrogen and Electricity from Renewable Resources," Environmental Science and Technology, Vol. 38, pp. 160A–167A, 2004.

Logan, B.E., et al., "Microbial Fuel Cells: Methodology and Technology," Environmental Science and Technology, Vol. 40 No. 7, pp. 5181–5192, 2006.

Liu, H., et al., "Production of electricity during wastewater treatment using a single chamber microbial fuel cell," Environmental Science and Technology, Vol. 38, pp. 2281-2285.

Logan, B.E., and J.M. Regan. "Electricity-producing bacterial communities in microbial fuel cells, " Trends in Microbiology Vol. 14, No. 12, pp. 512-518, 2006

Li, X. et al. "Manganese dioxide as a new cathode catalyst in microbial fuel cells, " Journal of Power Sources, Vol. 195, pp. 2586-2591, 2010

Jiang, D., and B. Li. "Granular activated carbon single-chamber microbial fuel cells (GAC-SCMFCs): A design suitable for large-scale wastewater treatment processes," Biochemical Engineering Journal, Vol. 47, pp. 31-37, 2009

Dekker, A. et al. "Analysis and Improvement of a Scaled-Up and Stacked Microbial Fuel Cell." Environmental Science and Technology, Vol. 43, No. 23, pp. 9038-9042, 2009.

Kato, S., et al., "Microbial interspecies electron transfer via electric currents through conductive materials," Proceedings of the National Academy of Sciences Volume 109, 2012.

Chapter 4

In-Plant Wet Weather Flows Management Processes

4.1 Introduction

Chapter 4 in-plant wet weather flows management processes include the storage and treatment of wastewater with infiltration/inflow entering a WWTP or storm-related flows in combined sewer systems entering a WWTP. This chapter focuses on storage and treatment technologies that can be used to manage the volume of wastewater during wet weather events. It does not address use of green infrastructure, which is being used in numerous cases in lieu of gray infrastructure.

4.2 Technology Assessment

Table 4.1 includes a categorized list of established, innovative, emerging, and adaptive use technologies for wet weather management. The innovative wet weather management technologies are: Compressible Media Filtration (CMF), Continuous Deflection Separator (CDS), TRASHMASTER™ Net Capture System, Treatment Shaft, HYDROSELF® Flip Gate Flusher, and Tipping Flusher® technology. Alternative Disinfectants (PAA and BCDMH) is an Emerging in-plant wet weather management technology, and BioActiflo® is an Adaptive Use Technology.

Wet weather flows can be better managed if the conveyance systems to a facility are well maintained and separated from the storm sewer system. However, new technologies are needed to overcome the wet weather issues more efficiently. Emerging technologies used to rehabilitate conveyance systems to reduce wet weather flows are described in the U.S. EPA document “Emerging Technologies for Conveyance Systems – New Installations and Rehabilitation Methods” (EPA 832-R-06-004, July 2006). An evaluation of the innovative technologies identified for in-plant wet weather management processes is presented in Figure 4.1.

Knowledge about technologies tends to evolve. The information provides a snapshot at a point in time; what is understood at one point in time may change as more information develops. This includes knowledge about operating mechanisms as well as the relative and absolute costs and features of a particular technology. Inquiries into the current state of knowledge are an important step when considering implementation of any technology.

Table 4.1—In-Plant Wet Weather Flows Management Processes – State of Development

Established Technologies (technology summaries not included)	
Treatment	
Dispersed Air Flotation	
Dissolved Air Flotation (DAF)	
Enhanced Clarification/High Rate Clarification (HRC)	
Ballasted Flocculation (Actiflo® and Microsep®)	
Lamella Plate Settlers	
Screening	
Vortex Separation	
Innovative Technologies	**Summary on page**
Treatment	
Compressible Media Filtration (CMF)	4-4
Continuous Deflection Separator (CDS)	4-8
TRASHMASTER™ Net Capture System	4-10
Treatment Shaft	4-11
Storage	
HYDROSELF® Flip Gate Flusher	4-13
Tipping Flusher®	4-15
Adaptive Use Technologies	**Summary on page**
BioActiflo®	4-19
Emerging Technologies	**Summary on page**
Disinfection	
Alternative Disinfectants(PAA and BCDMH)	4-16
Research Technologies	
None at this time	NA

Process	Evaluation Criteria									
	Development	Applicability	Benefits	Impact on Processes	Complexity	Air/Odor Emissions	Reuse	Energy	Footprint	Retrofitting
Treatment										
Compressible Media Filtration (CMF)	P, N	S, F	W	▲	▲	⊖	Dn	▲	⊖	▲
Continuous Deflection Separator (CDS)	P, N	S, F	W	▲	▲	⊖	Dn	▲	⊖	▲
TRASHMASTER™ Net Capture System	M, N	S, F	W	▲	⊖	⊖	Dn	▲	⊖	▲
Treatment Shaft	M, N	S, F	W	▲	▲	⊖	Dn	▼	▲	▲
Storage										
HYDROSELF® Flip Gate Flusher	M, N	S, F	W	▲	⊖	⊖	Dn	▲	⊖	▲
Tipping Flusher®	M, N	S, F	W	▲	⊖	⊖	Dn	▲	⊖	▲

Key

Statement of Development

B = Bench scale
I = Full-scale industrial applications
M = Full-scale municipal applications
O = Full-scale operations overseas
P = Pilot
N = Full-scale operations in North America

Applicability

F = Few plants
I = Industrywide
L = Primarily large plants
S = Primarily small plants

Potential Benefits

C = Capital savings
I = Intense operational demand
O = Operational/maintenance savings
S = Shock load capacity
W = Wet weather load capacity
E = Effluent quality

Effluent Reuse

Dp = Direct potable
Dn = Direct nonpotable
Ip = Indirect potable
In = Indirect nonpotable

Comparative Criteria

▲ Positive feature
⊖ Neutral or mixed
▼ Negative feature

Figure 4.1— Evaluation of Innovative In-Plant Wet Weather Flows Management Technologies

Treatment *prepared 2012* **Technology Summary**

Compressible Media Filtration (CMF)

Objective:

Multifunction, passive, high-rate filtration for wet- and dry-weather treatment applications.

State of Development:

Innovative.

Description:

The WWETCO FlexFilter™ and Bio-FlexFilter™ use a synthetic fiber media bed that is passively compressed from the sides by the head of the incoming water. The lateral compression forms a cone-shaped porosity gradient that allows the stratification and removal of large and small particles from the top to the bottom of the media bed. The porosity gradient through the media bed, with its ability to handle heavy solids loading, gives the technology a wide range of uses. In one location at the WWTF, the filter can be used to

1. Produce a reuse quality effluent as a tertiary filter
2. Increase the organic removal capacity of the facility, and/or reduce its power consumption
3. Treat excess wet-weather flow including biological treatment, as appropriate

The first two functions are accomplished during dry weather by a portion of the filter matrix sized for their specific dual-use (Figure 1). During dry weather, part of the filter matrix acts as a tertiary filter and the remaining portion as a biofilter. The tertiary filter cells can effectively remove phosphate precipitates created by addition of metal salts. The biotreatment portion of the filter matrix can be used during dry weather to treat primary influent or primary effluent wastewater, removing both particulates and soluble BOD reducing secondary loadings (one trial showed consistent 38 percent removal, [WWETCO, 2012]) while maintaining a healthy biological population in the filter media bed for treatment of the wet-weather flow when it occurs.

The biofilter cell matrix is sized for the excess wet-weather flow and TSS conditions to generally meet secondary treatment effluent criteria. In wet weather, valves are opened or closed to direct the excess flow through a one or two-stage filter treatment train. A two-stage, wet-weather filter train is shown in Figure 2. In this case the FlexFilter primarily provides solids separation and the Bio-FlexFilter provides soluble BOD removal, optimizing the capacity of each train component. Another operation option allows the FlexFilter or a portion of it to be used in the tertiary filter mode during smaller, wet-weather events. Only during larger events would the entire filter matrix be dedicated to wet-weather treatment. When biological treatment is not required, the Bio-FlexFilter cells can be eliminated. In this case, the FlexFilter would still be applied in the same two modes shown in Figures 1 and 2 (the Bio-FlexFilter being excluded), with both filter effluents going to disinfection.

A filter cell treating wet weather or primary type solids uses the neighboring filter effluent for backwash supply. When treating a waste with low solids (primary or secondary effluent), the filter cell can use the influent water as backwash supply. Low head air scrubs the media and lifts the spent backwash into the backwash trough to waste. Backwash from the filter would normally be routed to the plant influent, backwash from the biofilter would normally be sent to solids processing. Excess biological growth is controlled with a dilute chlorine (3 mg/L) solution added to the backwash.

Treatment *prepared 2012* **Technology Summary**

Compressible Media Filtration (CMF) (continued)

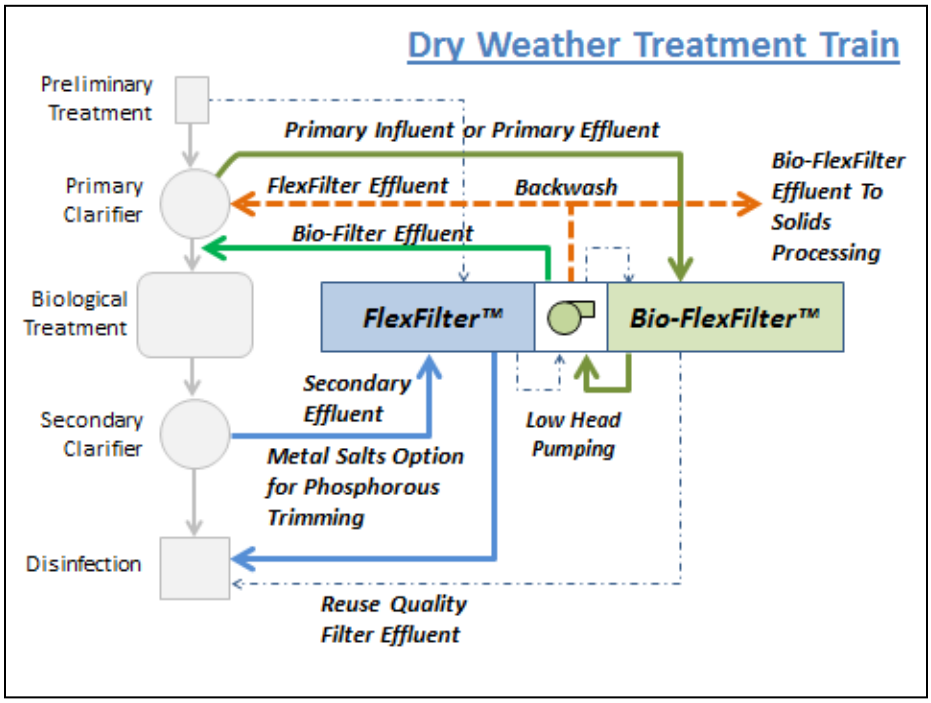

Figure 1. Dry-Weather Flow Schematic. Either filter system can be operated individually.

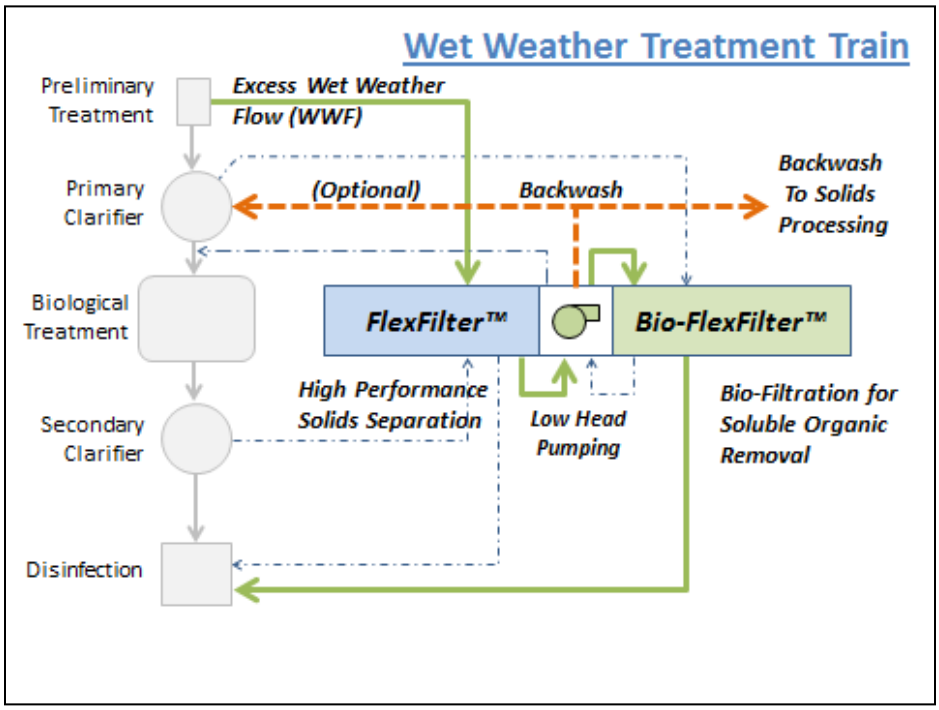

Figure 2. Wet-Weather Flow Schematic. Shows a two-stage FlexFilter/Bio-FlexFilter process train. A single-stage FlexFilter could also be appropriate for wet-weather CSO applications without biological treatment.

Treatment *prepared 2012* **Technology Summary**

Compressible Media Filtration (CMF) (continued)

The passively operated matrix of the FlexFilter cells works with simple flow and level logic controls, open-close valves, and a low-head blower for cleaning and pumping the spent backwash water to waste. The multifunction filter makes this technology very attractive for satisfying current and future regulatory mandates for phosphorous control, excess wet-weather treatment and as an intermediate wastewater treatment step to reduce overall plant energy consumption and/or increase plant organic treatment capacity. A trial in Atlanta (McKern, 2004), showed that the FlexFilter is suitable for removal of TSS from raw CSO flow (75% to 94%) and sedimentation basin effluent (35%).

Sizing of the filter matrix is a function of hydraulic and solids loading and the available head. Peak hydraulic loading rates (HLRs) range from 10 to 20 gpm/sq ft, with the lower end for high-strength wastewaters like CSOs and primary influent sewage. The higher HLR would apply to the more dilute solids concentrations such as from a tertiary filter or dilute wet weather. Chemically assisted phosphorous removal HLR is 5 to 10 gpm/sq ft, depending on the concentration of metal salt/soluble phosphorous precipitate required. For CSO or primary influent applications, the footprint of the concrete filter structure (10 MGD) including influent/effluent channels and operating and backwashing cell chambers would be less than 210 sq ft per MGD (WWETCO, 2012). A smaller footprint would be used for SSO or tertiatry applications. The filter system footprint above 10 MGD decreases with increasing flows. Also according to the manufacturer, the filter matrix footprint without the peripheral concrete channels and chambers can be reduced by about one-third using influent and effluent piping. The depth of the typical high solids filter is about 14 feet. Steel tank tertiary filters are 10 feet tall. Existing filter basins at 6- and 7-foot depths can be retrofitted.

Comparison to Established Technologies:

According to Frank and Smith (2006) the WWETCO FlexFilter technology provided comparable effluent TSS (49 mg/L to 52 mg/L) with the ballasted flocculation systems in side-by-side testing. However, ballasted flocculation require flocculation chemicals and ramp-up time (15 to 30 minutes) to achieve performance objectives. The WWETCO FlexFilter can meet similar or better TSS removals, requires no chemicals, and immediately achieves performance objectives. The FlexFilter starts dry and ends dry without odor issues, without special startup protocols, and without special attention to mechanical equipment. Although the WWETCO filter footprint is generally somewhat larger than the footprint for ballasted sedimentation, it is roughly half as deep. FlexFilter throughput for tertiary filtration is in the order of 98 percent (WWETCO, 2012). Average throughput for CSO is about 95 percent (< 5% backwash per McKern, 2004). The throughput for chemically assisted phosphorous filtration and biofiltration is in the order of 85 to 90 percent (WWETCO, 2012).

Available Cost Information:

Approximate Capital Cost: Equipment includes the filter media bed (all internal structural metals, media, compression bladder, air diffuser), complete controls, valves/gates and actuators and blower package with redundancy. Equipment costs vary with the scale of the facility. Smaller flows will result in greater redundancy because of the minimum size of the equipment. Costs decrease with increasing flows above 10 MGD. Equipment costs for the 10-MGD filter matrix can be generalized as follows:

Application	Estimated equipment cost ($ per gallon capacity)
Tertiary filter	Less than $0.06
SSO and primary effluent	Less than $0.07
CSO and influent	Less than $0.09

Approximate O&M Costs: Operation costs are summarized as follows (WWETCO, 2012):

1. Tertiary filtration – 10 kW per MGD treated (20 mg/L TSS influent)
2. SSO or primary effluent – 35 kW per MGD treated (100 mg/L TSS influent)
3. CSO or primary influent – 60 kW per MGD treated (200 mg/L TSS influent)

Treatment *prepared 2012* **Technology Summary**

Compressible Media Filtration (CMF) (continued)

Vendor Name(s):

WWETCO, LLC

152 Hickory Springs Industrial Dr.
Canton, GA 30115

Telephone: 404-307-5731

Email: info@westech-inc.com

Web site: http:/www.wwetco.com

Installation(s):

FlexFilter

Columbus, GA

Heard County Water Authority, Franklin,GA

Lamar, MO

Springfield, OH (2012)

Bio-FlexFilter

Manila, Philippines

Key Words for Internet Search:

Wet weather filtration, CSO, SSO, bio-filtration, enhanced primary filtration, intermediate wastewater treatment, roughing filter, HRT, phosphorus removal, tertiary filtration, compressed media filter

Data Sources:

Arnett, C.A., et al., “Bacteria TMDL Solution To Protect Public Health And Delisting Process in Columbus, GA,” WEFTEC, 2006.

Frank, D.A., and T.F. Smith III, “Side by Side by Side, The Evaluation of Three High Rate Process Technologies for Wet Weather Treatment,” WEFTEC, 2006.

McKern, R. et al., “Atlanta CSO Pilot Plant Performance Results,” WEFTEC, 2004.

WERF, Peer Review: Wet Weather Demonstration Project in Columbus, Georgia, Co-published: Water Environment Research Foundation, Alexandria, VA, and IWA Publishing, London, U.K., 2003.

WWETCO, Boner, M., personal communication, 2012.

Treatment *updated 2008* **Technology Summary**

Continuous Deflection Separator (CDS)

Objective:

Separates debris, sediments, oil, and grease from stormwater runoff.

State of Development:

Innovative.

Description:

The CDS is a hydrodynamic separator similar to a vortex separator, but the CDS has a filtration mechanism for solid separation. With the circular flow and particle sedimentation, the filtration mechanism increases removal rates during high flows. The screen is arranged so that the flow provides a scouring action intended to prevent plugging. Sediment trapping efficiency is a function of screen size. During flow events, the diversion weir bypasses the separation chamber to avoid washing trapped solids into the effluent flow. CDS units are available either precast or cast-in-place, and offline units can treat flows from 1 to 300 cubic feet per minute (cfm). The inline units treat up to 6 cfm and internally bypass flows in excess of 50 cfm. Floating sorbents have been used to improve removal of oil and grease.

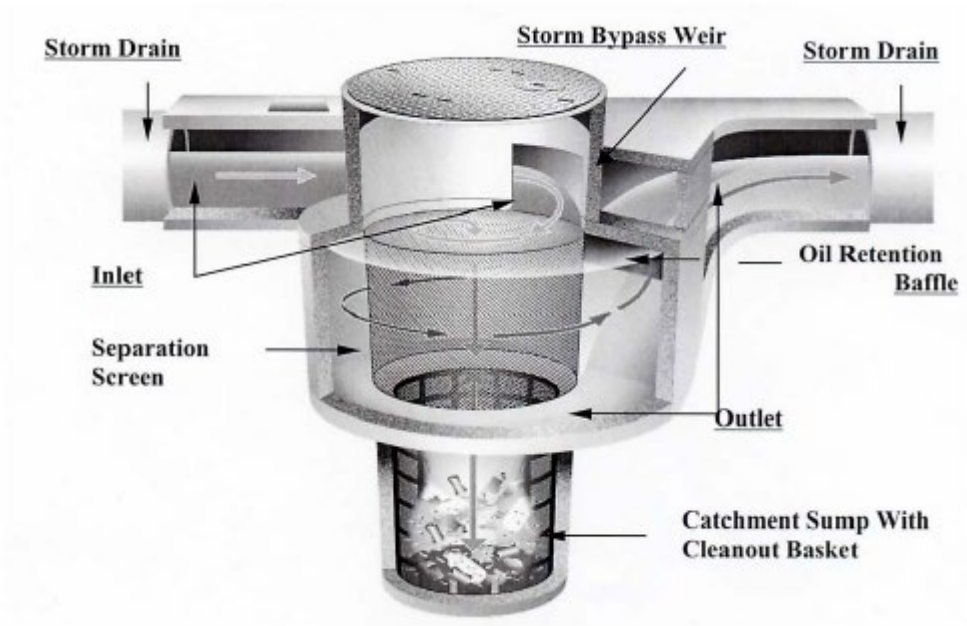

CDS Diagram

Comparison to Established Technologies:

CDS operation is independent of flow for wide treatment ranges.

Available Cost Information:

Approximate Capital Cost: Site specific and ranges from $5,000 to $50,000.
Approximate O&M Costs: Depend on flow and frequency of application.

Vendor Name(s):

CONTECH® Construction Products, Inc.
9025 Centre Pointe Dr., Suite 400
West Chester, OH 45069
Telephone: 800-338-1122 or 513-645-7000
Web site:
http://www.conteches.com/Products/Stormwater-Management/Treatment/CDS.aspx

Installation(s):

Bayside Bridge, Pinellas County, FL
Bovina, NY
Cincinnati, OH
Harrisonburg, VA
Lansing, IL
Ontario Mills, Ontario, CA

Treatment *updated 2008* **Technology Summary**

Continuous Deflection Separator (CDS) (continued)

Pacific Grove, CA
Redmond, WA
Redondo Beach, CA
Stanford University, Stanford, CA
Weehawken, NJ

Key Words for Internet Search:

CONTECH, Continuous Deflection Separation, CDS

Data Sources:

Vendor web site: http://www.contech-cpi.com/

http://www.state.nj.us/dep/dsr/bscit/cds_verification.pdf, "NJCAT Technology Verification Addendum Report: High Efficiency Continuous Deflective Separators," CDS Technologies, Inc., 2004.

Cook, T.J.F., et al., "The effectiveness of Continuous Deflective Separation (CDS) pollutant traps in reducing geochemical input into urban wetlands: A comparative study of two contrasting stormwater catchments, Perth, WA." 2003. Advances in Regolith, Proceedings of the CRC LEME Regional Regolith Symposia, Roach I.C., ed., pp. 80-81, 2003.

Schwarz, T., and S. Wells, "Storm Water Particle Removal using Cross-Flow Filtration and Sedimentation," Advances in Filtration and Separation Technology, Vol. 12, W. Leung, ed., American Filtrations and Separations Society, pp. 219-226, 1999.

United States patent (Patent Number: 5,788,848) – Apparatus and Methods for Separating Solids from Flowing Liquids or Gases, August 4, 1998.

Treatment *updated 2012* **Technology Summary**

TRASHMASTER™ Net Capture System

Objective:

Wet-weather management of trash and debris removal from combined sewer overflows and stormwater systems.

State of Development:

Innovative.

Description:

The TRASHMASTER Net Capture System is a molded structure with nets that removes accumulated trash, sediments, and debris in a combined sewer overflow or stormwater collection system. The operating principle of the system is to capture trash, debris, and sediment in special removable nets as the water flows through the unit. No electrical connections are required. It is used only in low-flow applications (5 cubic feet per second [cfs] or less) and inserts in-line on the existing piping. It is a lightweight, roto-molded, fiberglass unit that is easy to install on pipes that are 24 inches or smaller in diameter by using on-site equipment. No special construction is necessary. The unit can be installed in two days or less to depths of 10 feet. The unit can also accommodate special chemical feed systems to treat waterborne impurities.

Comparison to Established Technologies:

The TRASHMASTER Net Capture System is a unique solution to remove trash and debris in low flowing water. The vendor, Fresh Creek Technologies, produces similar, established technologies (e.g., Netting TrashTrap® System). Other established technologies require extensive engineering, special installation equipment, a more expensive product, and a week or longer to install.

Available Cost Information:

Approximate Capital Cost: Approximately $40,000.
Approximate O&M Costs: Approximately $110 per event.

Vendor Name(s):

Fresh Creek Technologies, Inc.
1384 Pompton Ave., Suite 2
Cedar Grove, NJ 07009
Telephone: 973-237-9099
Fax: 973-237-0744
Web site: www.freshcreek.com

Installation(s):

Elizabeth Township, PA
Kingston, Ontario, Canada
Signal Hill, CA
Somerville, NJ

Key Words for Internet Search:

TRASHMASTER Net Capture System, netting systems, Fresh Creek Technologies

Data Sources:

Email and telephone conversations with vendor.

http://www.freshcreek.com

Treatment *prepared 2012* **Technology Summary**

Treatment Shaft

Objective:

Automated capture and treatment of large combined sewer overflows in a compact structure. Minimal head loss, primary settling, skimming, fine screening, and disinfection in a unit.

State of Development:

Innovative.

Description:

The Treatment Shaft is a deep, in-ground, vertical shaft to provide disinfection and detention for wet-weather flows with low head loss. Treatment Shaft technology provides disinfection contact time, vessel flushing, air venting, odor control, surge control, skimming, settling, and fine screening in a compact structure suited for urban sites. During wet-weather conditions, water rises over an upstream interceptor weir and falls into the Treatment Shaft. For storms that exceed the shaft capacity, chlorine is automatically injected before the upstream weir via chemical mixers. The shaft fills and floatables are trapped on the upstream side of the shaft's baffle wall. Solids settle in the shaft because of the low upward velocity in the shaft. After the shaft fills, raked bar screens activate and trap screenings of mostly neutrally buoyant materials while allowing treated water to overflow to discharge. As the storm event subsides, dewatering pumps activate and screenings and floatables are drawn down to around the 10-foot level. A flushing mode begins with a high-pressure nozzle system to keep in suspension any materials that would normally settle. The dewatering chopper pumps continue until the shaft is emptied. The shaft can then be injected with an odor-neutralizing solution.

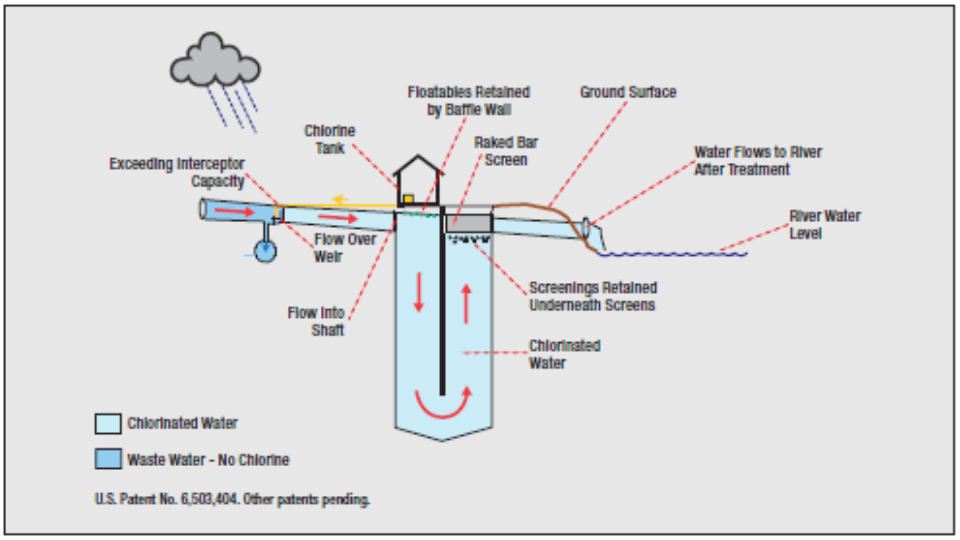

Process Flow Diagram for the Treatment Shaft

Comparison to Established Technologies:

Compared to traditional surface storage systems, the Treatment Shaft occupies approximately 15 percent of the surface area of a basin of the same volume (Gilberson, 2011). It has 30 to 50 percent lower capital cost than comparably sized tunnels or basins (Giulberson 2011). Simple shaft geometry minimizes head loss, allowing gravity operation and eliminating the need for booster pump stations. The Treatment Shaft system eliminates tunnel and associated drop shafts, riser shafts, construction shafts, ventilation structures, surge control tanks, and screening buildings. It also eliminates water infiltration and associated treatment costs, and manual disposal of screenings.

Available Cost Information:

Approximate Capital Cost: Example is $36.8 million for peak design flow of 1,206 MGD and storage capture volume of 6.8 MG (NIH Consultants, 2008)

Approximate O&M Costs: Compared to tunnels or basins, the Treatment Shaft has automated operation and lower O&M requirements.

Treatment *prepared 2012* **Technology Summary**

Treatment Shaft (continued)

Vendor Name(s):

Applied Engineering Technologies
2626 Packard Rd.
Ann Arbor, MI 48104
Telephone: 734-922-5066

Process Wastewater Technologies LLC (PWTech)
James Heist
9003 Yellow Brick Rd., Suite 5
Baltimore, MD 21237
Telephone: 410-238-7977
Fax: 410-238-7559
Email: jheist@pwtech.us

Installation(s):

Dearborn, MI

Key Words for Internet Search:

Treatment Shaft, combined sewer overflow, CSO, PWTech, AE Technology

Data Sources:

Gilberson, K. “New CSO Treatment Shaft Technology Replaces Cancelled Tunnel Project”, Environmental Science and Engineering Magazine, September 2011.

NIH Consultants LTD, Final Report on Interim Construction Progress: East Dearborn CSO Control Project Contract No. 6, September 2008.

Wright, S.J., et al., “Treatment shaft for combined sewer overflow detention,” Water Environmental Research, Vol. 82, No. 5, pp. 434-439, 2010.

AET (www.ae-technologies.net)

PWTech (www.PWTech.us)

http://www.wwdmag.com/channel/casestudies/city-save-120-million-using-innovative-combined-sewer-overflow-treatment-shaft-p

Storage *prepared 2008* **Technology Summary**

HYDROSELF® Flip Gate Flusher

Objective:

Wet-weather management, cleaning of combined sewer overflows and storage tanks.

State of Development:

Innovative.

Description:

The Hydroself flushing gate system is a method of removal of accumulated sediments and debris in the combined sewer retention systems, stormwater runoff, and balancing tank. The operating principle for the Hydroself flushing system is that the flush water is held in reserve and as it is released, there is a high-energy wave. The wave removes the accumulated debris from the retention chamber and interceptors along the flushway lengths.

Comparison to Established Technologies:

The Hydroself flushing gate system is not similar to established wastewater technology but is similar to other innovative technologies that restore the capacity of collection systems. Removing accumulated sediment can be done manually. The system lessens labor requirements and improves employee safety over manual cleaning.

Available Cost Information:

Approximate Capital Cost: Approximately $91.44 per square yard of gate area (1995).
Approximate O&M Costs: Approximately $0.07 per square yard of gate area.

Vendor Name(s):

Process Wastewater Technologies, Inc.
9003 Yellow Brick Rd, Suite S
Baltimore, MD 21237
Telephone: 410-238-7977
Fax: 410-238-7559
Web site:
http://www.pwtech.us/HTML/tipping_bucket.html

Steinhardt GmbH Wassertechnik (Hydroself Tipping Bucket)
Roderweg 6-10
D-65232
Taunusstein, Germany
Telephone: 49-6128-9165-0
Email: info@steinhardt.de
Web site:
http://steinhardtgmbh.com/flushing/hydroself-tipping-bucket/

Gabriel Novac and Associates, Inc. (Autoflush)
3532 Ashby
Montreal, Quebec H4R 2C1, Canada
Telephone: 514-336-5454
Email: gnacso@gnacso.com
Website: gnacso.com

Installation(s):

More than 600 units applied in Europe for cleaning CSO storage tanks
Clough Creek CSO Treatment Facility, Cincinnati, OH
Cheboygan, MI
Sarnia, Ontario, Canada

Key Words for Internet Search:

Sewer, tank, flushing, tipping flusher, wet weather management, wet well

Storage *prepared 2008* **Technology Summary**

HYDROSELF® Flip Gate Flusher (continued)

Data Sources:

WERF Manual, "Best Practices for Wet Weather Wastewater Flows," 2002.

Fan, C.Y., et al., "Sewer and Tank Flushing for Corrosion and Pollution Control," EPA/600/J-01/120, USEPA, 2001.

EPA, "Combined Sewer Overflow Technology Fact Sheet," EPA 832-F-99-042, 1999.

Field, R., and T.P. O'Connor, "Control and Treatment of Combined Sewer Overflows." Control and Treatment of Combined Sewer Overflows, P. Moffa, ed., Van Nostrand Reinhold, New York, NY, 1997.

Parente, M., et al., "Evaluation of the New Technology in the Flushing of Detention Facilities," WEFTEC Proceedings, 1995.

Novac, G., and N. Grande, "Cost Analysis of Different Methods of Cleaning CSO and Wastewater Equalization Tanks," WEFTEC Proceedings, 1992.

http://www.epa.gov/ednnrmrl/repository

http://www.steinhardt.de/htm_en/fset_e.html

Storage *prepared 2008* **Technology Summary**

Tipping Flusher®

Objective:

Wet-weather management, cleaning of combined sewer overflows, and storage tanks.

State of Development:

Innovative.

Description:

The system generally includes filling pipes and valves, a pumping system, and wet well (where restricted by the site conditions), and the tipping flusher vessels. The tipping flusher is a cylindrical stainless steel vessel suspended above the maximum water level on the back wall of the storage tank. Just before water overtops the vessel, the unit's center of gravity shifts and causes it to rotate and discharge its contents down the back wall of the tank. A curved fillet at the intersection of the wall and tank floor redirects the flushwater (with minimum energy loss) horizontally across the floor of the tank. The fillet size depends on the size of the flusher. The flushing force removes the sediment debris from the tank floor and transports it to a collection sump at the opposite end of the tank.

Comparison to Established Technologies:

The Tipping Flusher is not similar to established wastewater technology, but it is similar to other innovative technologies that restore the capacity of collection systems. Removing accumulated sediment can be done manually. The system lessens labor requirements, and it improves employee safety over manual cleaning.

Available Cost Information:

Approximate Capital Cost: Approximately $15/cubic yard of storage, $137/square yard (1998).
Approximate O&M Costs: $0.10/square yard (1998).

Vendor Name(s):

Process Wastewater Technologies, Inc.
9003 Yellow Brick Rd, Suite S
Baltimore, MD 21237
Telephone: 410-238-7977
Fax: 410-238-7559
Web site: http://www.pwtech.us/HTML/tipping_bucket.html

Steinhardt GmbH Wassertechnik
(Hydroself Tipping Bucket)
Roderweg 6-10
D-65232
Taunusstein, Germany
Telephone: 49-6128-9165-0
Email: info@steinhardt.de
Web site: http://steinhardtgmbh.com/flushing/hydroself-tipping-bucket/

Installation(s):

Many European installations, more than 25 installations in the United States including Saginaw, MI

Key Words for Internet Search:

Sewer, tank, flushing, tipping flusher, wet weather management, wet well

Data Sources:

WERF Manual, "Best Practices for Wet Weather Wastewater Flows," 2002.

EPA, "Combined Sewer Overflow Technology Fact Sheet," EPA 832-F-99-042, 1999.

Field, R., and T.P. O'Connor, "Control and Treatment of Combined Sewer Overflows," Control and Treatment of Combined Sewer Overflows, P. Moffa, ed., Van Nostrand Reinhold, New York, NY. 1997.

Parente, M., et al., "Evaluation of the New Technology in the Flushing of Detention Facilities," WEFTEC Proceedings, 1995.

Disinfection *updated 2012* **Technology Summary**

Alternative Disinfectants (PAA and BCDMH)

Objective:

Alternative to chlorine disinfection using disinfection products such as peracetic acid (PAA), or Bromo Chloro Dimethylhydantoin (1-Bromo-3-Chloro-5,5 Dimethylhydantoin [BCDMH]).

State of Development:

Emerging.

Description:

Alternative disinfectants are being applied to wet-weather flows because of their ability to act as high-rate disinfectant. PAA is a stronger oxidant than hypochlorite or chlorine dioxide but not as strong as ozone. In parts of Europe and Canada chlorine is not used because of the potential to form disinfection by-products. PAA (aka peroxyacetic acid) [CH3CO3H] is an oxidizing agent used as a routine wastewater disinfectant. Recently approved by EPA specifically as a wastewater disinfectant (Proxitane WW-12), PAA is a clear, colorless liquid available at a concentration of 12 to 15 percent. With stabilizers to prevent degradation in storage it exhibits less than 1°percent decrease in activity per year. At the 12 percent concentration, its freezing point is approximately –40°C. Although it is explosive at high concentrations, at 15 percent or less, PAA does not explode. The solution is acidic (pH 2) and requires care in handling, transport, and storage. PAA has been used successfully in combination with UV disinfection, allowing reductions in lamp intensity and less frequent lamp cleaning. It is available in totes or in bulk, should be stored near the point of application, and should be well mixed where it is introduced. The dosage used for disinfecting secondary effluent depends on the target organism, the water quality, and the level of inactivation required. For example, a dosage of 5 mg/L 15 percent PAA, with contact time of 20 minutes, can reduce fecal and total coliform by 4 to 5 logs in secondary effluent (Morris 1993). Dosage of 1–2 mg/L PAA is typical for secondary effluents. Note, however, that PAA is less effective for inactivation of spores, viruses, protozoa, and protozoa including Giardia and Cryptosporidium (Koivunen et al. 2005; Liberti and Notarnicola 1999).

BCDMH is a chemical disinfectant used to treat drinking water. It is a crystalline substance, insoluble in water, but soluble in acetone. It reacts slowly with water, releasing hypochlorous acid and hypobromous acid. EBARA Engineering Service Corporation has devised a system to liquefy the BCDMH powder in a mixer with an injection device. The solution is injected directly into the wastewater, and it relies on the turbulence of the process to mix into the disinfection process.

Comparison to Established Technologies:

Compared to disinfection with chlorine compounds, PAA does not form harmful by-products after reacting with wastewater when using dosages typical for secondary effluent. For example, during the trial at St. Augustine (Keough and Tran 2011), an average PAA dose of 1.5 mg/L provided similar fecal coliform reduction as a 7 mg/L chlorine dose (both meeting the 200 cfu/00 mL limit), but the chlorine resulted in 170 µg/L total THM compared to 0.6 µg/L TTHM for PAA. With tertiary treatment, PAA can meet limits of less than 10 cfu/mL but achieving very low (less than 2 cfu/100 mL) fecal coliform limits required high PAA doses (Leong et al. 2008). However, a residual of acetic acid could be present and might exert an oxygen demand or provide substrate for bacterial regrowth. Dosages and contact times are no more than required for disinfection with chlorine, so existing contact tanks should be adequate for conversion to PAA.

BCDMH has a small footprint and is easier to store than chlorine disinfection products. The feed stock is BCDMH powder, which is liquefied as needed by feeding through a dissolution mixer with clean water to form a solution that is injected into the wastewater. The BCDMH powder is reportedly highly stable, with a shelf life of longer than one year, making it potentially attractive for use in CSO applications that are characterized by intermittent operation. BCDMH is an effective disinfectant that can achieve bacterial reductions comparable to sodium hypochlorite, but it acts in a shorter amount of contact time (typically 3 minutes instead of 5 minutes for sodium hypochlorite), thereby reducing the size of the contact chamber, which might result in capital cost savings. Similar to sodium hypochlorite, BCDMH also produces DBPs and disinfection residuals, potentially requiring the use of a reducing agent.

Disinfection *prepared 2008* **Technology Summary**

Alternative Disinfectants (PAA and BCDMH) (continued)

Available Cost Information:

Approximate Capital Cost: Equipment required is similar to that used for hypochlorite systems.
Approximate O&M Costs: The cost of PAA is approximately $1.00/lb.

Vendor Name(s):

Peracetic Acid
FMC Corporation
Minh Tran
1735 Market St
Philadelphia, PA 19103
Telephone: 609-951-3180 or 267-357-1645
Email: Minh.Tran@fmc.com
Web site: http://www.microbialcontrol.fmc.com

Solvay Chemicals NA/PERAGreen Solutions
John Meakim
2900 Hungary Rd
Richmond, VA 23228
Telephone: 804-501-0845 x320
Fax: 804-501-0846
Web site: www.peragreensolutions.com

BCDMH
EBARA Engineering Service Corporation
Shinagawa, NSS-11 Building
2-13-34 Konan, Minato-Ku, Tokyo, Japan
Telephone: 81-3-5461-6111 (switchboard)
Web site: http://www.ebara.co.jp/en/

Installation(s):

Peracetic Acid
Many applications are in Europe, including
- Milan/Taranto, Italy
- Kuopio, Finland

Canadian applications:
- Niagara Falls, Ontario
- Chateauguay, Quebec
- La Prarie, Quebec

U.S. pilots:
- Hannibal, MO
- Steubenville, OH
- Jefferson City, MO
- St Augustine, FL
- Largo, FL

BCDMH
Columbus, GA
Akron, OH

Key Words for Internet Search:

Alternative disinfectant, CSO disinfection, peracetic acid, PAA, peroxyacetic acid, BCDMH

Data Sources:

Brian, K., and M. Tran, “Old City, New Ideas: Peracetic Acid in Wastewater Disinfection at St.Augustine,” Florida Water Resources Journal, April, 2011.

Leong, et al., “Disinfection of Wastewater Effluent: Comparison of Alternative Technologies,” Water Environment Research Foundation (WERF) Report 04-HHE-4, 2008.

Meakim, J.T., et al., “Peroxyacetic Acid Restores Design Capacity for Fecal Coliform Compliance in an Underperforming UV Disinfection Wastewater System with No Capital Upgrade,” Proceedings WEF Specialty Conference on on Disinfection, 2009.

Rossi, S., et al., “Peracetic Acid Disinfection: A Feasible Alternative to Wastewater Chlorination,” Water Environment Research, Vol. 79, No. 4, pp. 341–350, 2007.

Moffa, P.E., et al., “Alternative Disinfection Technology Demonstrates Advantages for Wet Weather Applications,” Water Environment and Technology, January 2007.

Disinfection *prepared 2008* **Technology Summary**

Alternative Disinfectants (PAA and BCDMH) (continued)

Columbus Georgia Water Works, CSO Technology Testing web site: http://www.cwwga.org/NationalPrograms/Index.htm

Combined Sewer Overflow Technology Fact Sheet Alternative Disinfection Methods web site: www.epa.gov/owmitnet/mtb/altdis.pdf

Gehr, R., et al., "Disinfection Efficiency of Peracetic Acid, UV and Ozone after Enhanced Primary Treatment of Municipal Wastewater," Water Research, Vol. 37, No. 19, pp. 4573-4586, 2003.

Morris, R., "Reduction of Microbial Levels in Sewage Effluents using Chlorine and Peracetic Acid Disinfectants," Water Science and Technology, Vol. 27, 1993.

WERF, Wet Weather Demonstration Project in Columbus, Georgia, 98-WWR1P.

Kitis, M., "Disinfection of Wastewater with Peracetic Acid: A Review," Environment International, Vol. 30, pp. 47–55, 2004.

Koivunen, J., and H. Heinonen-Tanski, "Inactivation of Enteric Microorganisms with Chemical Disinfectants, UV Irradiation and Combined chemical/UV Treatments," Water Research, Vol. 39, No. 8, pp.1519-1526, 2005.

Liberti, L., and M. Notarnicola, "Advanced Treatment and Disinfection for Municipal Wastewater Reuse in Agriculture," Water Science and Technology, Vol. 40, No. 4-5, pp. 235-245, 1999.

Treatment *updated 2012* **Technology Summary**

BioActiflo® Process

Objective:

Biological treatment with high-rate clarification of wet weather flows.

State of Development:

Adaptive Use.

Description:

The BioActiflo® process is a high-rate process that combines biological treatment with the Actiflo® ballasted flocculation high-rate clarification process (see separate fact sheet for the Actiflo® process). Biological treatment is provided by a solids contact basin which is used ahead of the Actiflo high rate clarification. This basin has a shorter hydraulic retention time and a lower mixed liquor suspended solids (MLSS) concentration than conventional aeration basins. Biological solids in the return activated sludge (RAS) are used to uptake soluble biochemical oxygen demand (BOD) and use it as a substrate. Testing to date has shown that the uptake rate is a function of the return activated sludge (RAS)/wastewater contact time and the amount of biological solids in contact with the primary wastewater. The target concentration of MLSS in the contact basin is maintained by using a portion of the RAS stream in addition to concentrated sludge from the Actiflo high - rate clarification process. The MLSS is aerated for rapid BOD uptake by the biomass and then flows from the solids contact tank to the Actiflo® high-rate clarification process which uses coagulation, injection of microsand and polymer, settling and sand recirculation as described in the Actiflo Technology Summary in Chapter 2 of this document. The result is a process that provides high removal efficiency of BOD, as well as suspended solids, thereby achieving biological treatment of excess flows while preserving the integrity of plant processes and washout of biomass.

Pilot testing of the BioActiflo® process was conducted in Fort Smith, AR in 2004 to 2006, Port Orchard, WA in 2007, and Knoxville, TN in 2010. Bench scale testing was conducted at the Wilson Creek Regional Wastewater Treatment Plant in Lucas, Texas. The first BioActiflo installation was commissioned in 2012 in Akron OH and pilot testing is in progress. This testing is focusing on BioActiflo performance for BOD and total suspended solids (TSS), as well as looking at pathogen removal. While pilot testing to date has shown that the process is capable of achieving total BOD removal exceeding 85% and TSS removal of 90% or higher, current additional testing will provide additional information on process reliability in achieving TBOD and TSS removal targets.

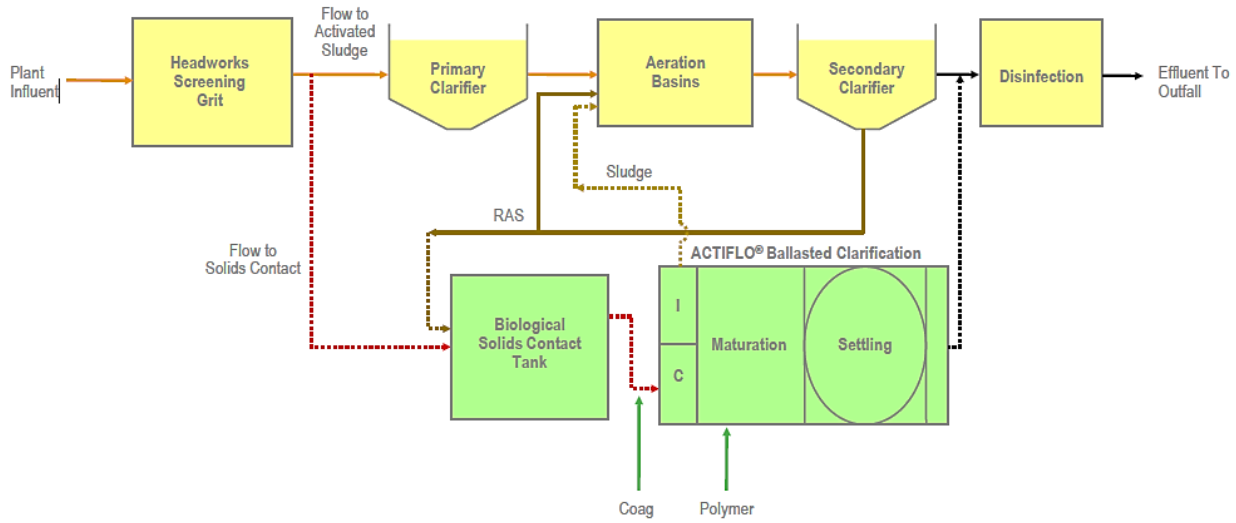

Diagram of BioActiflo® Configuration (in green) at a Wastewater Treatment Plant

Treatment *updated 2012* **Technology Summary**

BioActiflo® Process (continued)

Comparison to Established Technologies:

Compared to conventional biological treatment systems, the BioActiflo® provides treatment to all flows entering a plant. It also has a relatively small footprint due to its short hydraulic retention time and high surface loading rates. While the coagulation and flocculation tanks ahead of the Actiflo unit add to the system footprint, this is still a much smaller footprint option than a conventional secondary clarifier (Fitzpatrick et al, 2012). The clarification part of the BioActiflo® process also allows dual use operations for wet weather peak flow treatment and dry weather primary or tertiary treatment if desired. Compared to primary or chemically enhanced primary treatment processes, the BioActiflo® process is not as limited by existing clarifier capacity. By combining proven treatment technologies such as high-rate contact-stabilization and ballasted sedimentation, site constraints can be ameliorated at significant capital and operating cost savings (Katehis et. al, 2011). It should be noted that BioActiflo® testing to date has been based on site specific conditions. As such, more data is needed to determine if BioActiFlo could be utilized in lieu of conventional treatment.

Available Cost Information:

Approximate Capital Cost: Not disclosed by vendor.
Approximate O&M Costs: Not disclosed by vendor.

Vendor Name(s):

Kruger USA
401 Harrison Oaks Blvd., Suite 100
Cary, NC 27513
Telephone: 919-677-8310
Fax: 919-677-0082
Email: krugerincmarketing@veoliawater.com
Web site: http://www.krugerusa.com

Installation(s):

Fort Smith, AR
Port Orchard, WA
Knoxville, TN (Kuwahee and Forth Creek WWTPs)
Wilson Creek RWWTP, TX (Bench-scale testing)
Akron, OH

Key Words for Internet Search:

BioActiflo®, Ballasted High Rate Clarification, Solids Contact Basin, BHRC

Data Sources:

Web site owned by Kruger USA.

J. D. Fitzpatrick, J.D., et al., “Preparing for a Rainy Day – Overview of Treatment Technology Options for Wet-Weather Flow Management”, Water Environment Federation’s Annual Technical Exhibition and Conference (WEFTEC) proceedings, 2012.

Katehis, Dimitrios, et al., “Maximizing Wet Weather treatment Capacity of Nutrient Removal Facilities”, Water Environment Federation’s Annual Technical Exhibition and Conference (WEFTEC) proceedings, 2011.

Keller, John, et al., “Actiflo®: A Year’s Worth of Operating Experience from the Largest SSO System in the U.S.,” Water Environment Federation’s Annual Technical Exhibition and Conference (WEFTEC) proceedings , 2005.

Sigmund, Thomas, et al., “Operating Chemically Enhanced Clarification for Optimum Disinfection Performance,” Water Environment Federation’s Annual Technical Exhibition and Conference (WEFTEC) proceedings, 2006.

Chapter 5

Process Monitoring Technologies

5.1 Introduction

Process monitoring technologies are a critical component in the improvement of wastewater treatment. Process monitoring technologies, can help prevent upsets in treatment systems, maintain compliance with discharge limits, and save energy and chemicals used by maximizing process efficiency. (They are included for process monitoring only and are not expected to be used for compliance monitoring reporting, as described in CFR Part 136. However, they are not dispositive for any internal monitoring required by EPA or a State.)

5.2 Technology Assessment

The innovative technologies listed in this chapter are focused on online monitoring in wastewater treatment systems. These monitoring technologies usually are probes or sensors that can detect change in physical, chemical and biological activity, and they can be installed at critical points throughout the plant. They can save energy and reduce operation and maintenance cost. The innovative process monitoring technologies addressed in this chapter are: Fluorescence In Situ Hybridization (FISH) for Filamentous and Nitrifying Bacteria, Microtox®/Online Microtox®, Nicotinamide Adenine Dinucleotide (NADH) Probes, Online Respirometry, Microwave Density Analyzer, and Nutrient Analyzers, Probes & Electrodes. The emerging process monitoring technologies addressed in this chapter are: Biological Micro-Electro-Mechanical Systems (BioMEMS), FISH for Phosphorus Accumulating Organisms (PAOs), Handheld Advanced Nucleic Acid Analyzer (HANAA), Immunosensors and Immunoassays, and Photo-electro Chemical Oxygen Demand (PeCOD™). Quantitative PCR (qPCR) technology for quantification of microorganisms based on their DNA is now being applied for wastewater treatment research and for rapid detection of pathogens and will be included in a future update of this report.

Table 5.1 includes a listing of established, innovative, and emerging technologies for process monitoring. An evaluation of the innovative technologies identified for process monitoring is presented in Figure 5.1. Summary sheets for each innovative technology and for each emerging technology are provided at the end of this chapter.

Knowledge about technologies tends to evolve. The information provides a snapshot at a point in time; what is understood at one point in time may change as more information develops. This includes knowledge about operating mechanisms as well as the relative and absolute costs and features of a particular technology. Inquiries into the current state of knowledge are an important step when considering implementation of any technology.

Table 5.1—Process Monitoring Technologies – State of Development

Established Technologies (technology summaries not included)	
Microbial Activity	
Dissolved Oxygen Analyzer	
Oxidation Reduction Potential (ORP) Probe	
Solids Retention Time (SRT) Controller	
Solids	
Sludge Blanket Level Detector	
Total Suspended Solids Analyzer	
Water Quality	
Online Cl_2 Residual	
pH Probes	
Innovative Technologies	**Summary on page**
Microbial Activity	
Fluorescence In Situ Hybridization (FISH) for Filamentous and Nitrifying Bacteria	5-4
Microtox®/Online Microtox®	5-5
Nicotinamide Adenine Dinucleotide (NADH) Probes	5-6
Online Respirometry	5-7
Solids	
Microwave Density Analyzer	5-8
Water Quality	
Nutrient Analyzers, Probes, and Electrodes	5-9
Adaptive Use Technologies	
None at this time	NA
Emerging Technologies	**Summary on page**
Microbial Activity	
Biological Micro-Electro-Mechanical Systems (BioMEMS)	5-12
FISH for Phosphorus Accumulating Organisms (PAOs)	5-13
Handheld Advanced Nucleic Acid Analyzer (HANAA)	5-14
Immunosensors and Immunoassays	5-15
Water Quality	
Photo-electro Chemical Oxygen Demand (PeCOD™)	5-16
Research Technologies	
None at this time.	

Process	Evaluation Criteria									
	Development	Applicability	Benefits	Impact on Processes	Complexity	Air/Odor Emissions	Reuse	Energy	Footprint	Retrofitting
Microbial Activity										
Fluorescence In Situ Hybridization (FISH) for Filamentous and Nitrifying Bacteria	I, M, N	I, F	C, O, S	▲	▲	⊖	NA	⊖	⊖	▲
Microtox®/Online Microtox®	I, M, N	I, F	C, O, S	▲	⊖	⊖	NA	⊖	⊖	⊖
Nicotinamide Adenine Dinucleotide (NADH) Probes	I, M, N	I, F	C, O	▲	▲	⊖	NA	▲	⊖	
Online Respirometry	I, M, N	F	C, O, S	▲	▲	⊖	NA	▲	⊖	▲
Solids										
Microwave Density Analyzer	I, M, N	F	C, O, S	▲	▲	⊖	NA	⊖	⊖	▲
Water Quality										
Nutrient Analyzers, Probes, and Electrodes	I, M, N	I, F	C, O, S	▲	▲	⊖	Dn,In	▲	⊖	▲

Key

Statement of Development

B = Bench scale
I = Full-scale industrial applications
M = Full-scale municipal applications
O = Full-scale operations overseas
P = Pilot
N = Full-scale operations in North America

Applicability

F = Few plants
I = Industrywide
L = Primarily large plants
S = Primarily small plants

Potential Benefits

C = Capital savings
I = Intense operational demand
O = Operational/maintenance savings
S = Shock load capacity
W = Wet weather load capacity
E = Effluent quality

Effluent Reuse

Dp = Direct potable
Dn = Direct nonpotable
Ip = Indirect potable
In = Indirect nonpotable

Comparative Criteria

▲ Positive feature
⊖ Neutral or mixed
▼ Negative feature

Figure 5.1— Evaluation of Innovative Process Monitoring Technologies

Microbial Activity *prepared 2008* **Technology Summary**

Fluorescence In Situ Hybridization (FISH) for Filamentous and Nitrifying Bacteria

Objective:

Identify and quantify specific microorganisms in wastewater.

State of Development:

Innovative.

Description:

Bacteria in activated sludge contains DNA as unique genetic material. DNA sequences unique to individual groups of microorganisms can be used to identify specific microorganisms in a sample containing a mixture of many different types of microorganisms. The process of identifying specific microorganisms is part of the full-cycle 16S Ribosomal Ribonucleic Acid (rRNA) approach by using FISH. Fluorescently labeled 16S rRNA probes are hybridized, stained, and observed under an epifluorescent microscope. This document discusses the on-line version, not the field test kit. FISH was developed in the 1990s and routinely is used in medical fields. More recently it has been applied to the wastewater treatment field, as well as at wetlands. Also, it has potential applicability for monitoring efforts such as tracking fecal organisms ("microbial source tracking").

Comparison to Established Technologies:

The microbial detection process is able to positively identify specific microorganisms in a mixed culture. Previously, microbiological tests performed in a laboratory were necessary to identify and enumerate bacteria. This process provides real-time feedback, over laboratory tests that take hours or even days for results. Another advantage of using FISH is that it does not have to be performed on cells that are actively dividing, which makes it a more versatile test. Use of FISH is now fairly common.

Available Cost Information:

Approximate Capital Cost: Unknown.

Approximate O&M Costs: Unknown.

Vendor Name(s):

Department of Civil and Environmental Engineering at the following universities:

University of Illinois, Urbana-Champaign

University of Cincinnati

North Carolina State University

Installation(s):

Littleton/Englewood Wastewater Treatment Plant
Englewood, Colorado 80110
(Profile data were collected monthly since July 1996 during this NSF grant period.)

Key Words for Internet Search:

Fluorescence In Situ Hybridization, FISH, 16S rRNA, full-cycle 16S rRNA approach, phylogeny

Data Sources:

Department of Civil and Environmental Engineering, University of Illinois, Urbana-Champaign, University of Cincinnati, and North Carolina State University.

Sidney Biesterfeld, Linda Figueroa, Mark Hernandez, and Phil Russell, Colorado School of Mines, Littleton/Englewood Wastewater Treatment Plant, Englewood, Colorado, and University of Colorado, Boulder, 80309: *Use of Fluorescent Oligonucleotide Probes to Characterize Vertical Population Distributions of Nitrifying Bacteria in a Full-Scale Nitrifying Trickling Filter, 1998*.

Microbial Activity *prepared 2008* **Technology Summary**

Microtox®/Online Microtox®

Objective:

Acute toxicity analysis for wastewater, water, soil, and other hazardous waste applications.

State of Development:

Innovative.

Description:

The toxicity test is based on indigenous bioluminescence of a marine bacterium (*Photobacterium phosphoreum* to *Vibrio fischeri* strain, NRRL B-11177). The aqueous samples are incubated for controlled time and luminators are used to compare the reduction in light of the sample with a control culture of the bacterium. The proportional reduction in bioluminescence is indicative of toxicity of the sample. The Microtox® instrumentation systems are available for online and offline toxicity analysis.

Comparison to Established Technologies:

Microtox® monitoring is a biosensor based on a toxicity measurement system. The Microtox® process can provide near real-time monitoring of water and wastewater and is much faster than other laboratory based analysis.

Available Cost Information:

Approximate Capital Cost: $17,895.
Approximate O&M Costs: Costs: $2.50 to $7 per test. Cost information includes the cost for the software for the unit. The O&M cost varies depending on the dilution range of toxicity tests.

Vendor Name(s):

Modern Water (current owner of this technology)
15 Read's Way, Suite 100
New Castle, DE 19720
Telephone: +001 302-669-6900 or +1(0) 302 669 6900
Email: info@modernwater.com
Email UK: info@modernwater.co.uk
Web site: http://www.modernwater.co.uk

Strategic Diagnostics, Inc.
(former owner of this technology)
111 Pencader Drive
Newark, DE 19702
Telephone: 302-456-6789 or 800-544-8881
Email: sales@sdix.com
Web site: http://www.sdix.com

Installation(s):

Petersburg, VA

Key Words for Internet Search:

Microtox®, toxicity test, wastewater, online

Data Sources:

WERF Report, Collection and Treatment – A Review and Needs Survey of Upset Early Warning Devices, Final Report, 2000.

Web site sources are as follows:
http://www.modernwater.co.uk
http://www.sdix.com
http://www.azurenv.com

Microbial Activity *updated 2012* **Technology Summary**

Nicotinamide Adenine Dinucleotide (NADH) Probes

Objective:

NADH process probes can be used for aeration control to maintain simultaneous nitrification and denitrification conditions.

State of Development:

Innovative. (Not currently licensed for sale in the United States as of 2012.)

Description:

Nicotinamide adenine dinucleotide (NAD) is an intermediate compound in biological reactions that functions to transport electrons from a reduced substrate (i.e., chemical oxygen demand) to the biosynthetic pathways. In its reduced form, it exists as NADH or NADPH and is commonly referred to as reducing power. When light at 340 nm strikes NADH, it fluoresces and emits light at 460 nm. NADH probes emitting 340 nm and detecting 460 nm can be used to monitor the level of reducing power by measuring fluorescence, which indicates the concentration of NADH. The measurement is done using immersed probes with no sampling or subsequent analysis. The SymBio process has applied NADH measurement (along with measurement of the dissolved oxygen level) to control aeration as needed to optimize Simultaneous Nitrification and deNitrification (SNdN) in the same basin. When properly controlled the SNdN process provides denitrifying anoxic microenvironments inside the activated sludge floc at the same time as aerobic nitrifying conditions are provided at the floc surface and in the bulk water.

Comparison to Established Technologies:

Other technologies that monitor the oxidation/reduction level of the bioreactor are dissolved oxygen probes and oxidation reduction potential (ORP) probes. Both are inferior to NADH as measures of biomass reducing power. ORP measurements include the reducing power contributed by reduced substrates whether the biomass is able to act on them. Dissolved oxygen probes provide information on only a single oxidizing compound (oxygen) and provide no information on the state of the reactor environment when it contains no dissolved oxygen as in anoxic or anaerobic conditions.

Available Cost Information:

Approximate Capital Cost: 2005 cost for SymBio was approximately $100,000 for one sensor with a process control package. The SymBio process and NADH probe technology are no longer licensed for sale in the United States. For possible site-specific licensing, contact former licensee Ovivo Water (Enviroquip).
Approximate O&M Costs: No additional costs for O&M are incurred.

Vendor Name(s):

Ovivo Water (Enviroquip)
Formerly licensed to sell SymBio in the United States
2404 Rutland Dr, Suite 200
Austin, TX 78758
Telephone: 512-834-6029
Email: chintan.parikh@ovivowater.com

Installation(s):

More than 40 municipal applications are in the United States including:
Bend OR, Big Bear CA, Lake Elsinore CA,
New Philadelphia OH, Perris CA,
Pflugerville TX, Rochelle IL, Stonington CT

Key Words for Internet Search:

SymBio, NADH, Simultaneous nitrification denitrification, SNdN

Data Sources:

Trivedi, H., and N. Heinen, “Simultaneous Nitrification/Denitrification by Monitoring NADH Fluorescence in Activated Sludge,” WEFTEC 2000.

Chintan Parik, Ovivo Water, June 7, 2012.

Microbial Activity *prepared 2008* **Technology Summary**

Online Respirometry

Objective:

Measures cellular respiration or oxygen uptake rate.

State of Development:

Innovative.

Description:

Respirometry devices are used for biotreatment process control. The device can be set up and operated in different modes. For oxygen uptake-based respirometers, oxygen is measured either in closed headspace gas or liquid phases. The respirometry rate measurement can also determine the shock-load measurement and toxicity in a system when the baseline respirometry rate has been set for a system.

Respirometer's sensors can also be calibrated to measure other gases of concern like carbon monoxide, hydrogen sulfide, and methane.

Comparison to Established Technologies:

Traditionally, respirometric studies or kinetic parameters for wastewater treatment have been performed in laboratories with use of dissolved oxygen probes. During the stabilization of probes in the laboratory, sensitive information was lost, which was critical for measuring oxygen uptake rates and dissolved oxygen rates. The real-time feedback using the probes provides more reliable information on oxygen uptake.

Available Cost Information:

Approximate Capital Cost: 1 unit of the respirometer Respicond V for about $60,000 U.S.
Approximate O&M Costs: Unknown.
Cost based on the published cost for the Respicond V on the web site of A. Nordgren Innovations AB, Sweden.

Vendor Name(s):

A. Nordgren Innovations AB
Djakneboda 99
SE915 97 Bygdea, Sweden
Telephone: 46-934-31260
Email: a.nordgren@respicond.com
Web site: http://www.respicond.com

Columbus Instruments
950 N. Hague Avenue
Columbus, OH 43204
Telephone: 614-276-0861 or 800-669-5011
Email: sales@colinst.com
Web site: http://www.colinst.com

Respirometry Plus, LLC
P.O. Box 1236, Fond du Lac, WI 54935-1236
Telephone: 800-328-7518
Email: operations@respirometryplus.com
Web site: http://www.respirometryplus.com

Installation(s):

There are no known installations.

Key Words for Internet Search:

Cellular respiration, online respirometry, biotreatment process control, oxygen respirometer

Data Sources:

WERF web site and publications.

Research journals and publications.

Solids *prepared 2008* **Technology Summary**

Microwave Density Analyzer

Objective:
Solids measurement.

State of Development:
Innovative.

Description:
The microwave sludge density transmitter uses microwave-phase difference measurements to determine the density of solids flowing through pipes. This method exploits the way that fluid density affects the propagation of microwaves when they pass through it. The Microwave Density Analyzer allows reliable measurement of the sludge density and monitors the difference in microwave phase between the original wave and one wave that passed through the measured fluid. Unlike the method of monitoring the attenuation of a transmitted wave, measuring flow density by observing a wave's phase difference is not affected by flow velocity and is resistant to the effects of contamination, scaling, fouling, and gas bubbles. It uses no moving mechanical parts or mechanism that is often used in other measuring methods for cleaning, sampling, or defoaming. It permits continuous measurement. The density meter measures density in electric current, which is suitable for an application in a process for monitoring and controlling.

Comparison to Established Technologies:
This density meter has adapted a new measuring method called "phase difference method by microwaves." When microwaves go through a substance and come out of it, This density measures the phase lag of the waves and obtains a certain physical property of the substance that is proportional to the density.

Available Cost Information:
Approximate Capital Cost: 8-inch density meter is about $75,000 to $100,000 depending upon the specific application.
Approximate O&M Costs: Not disclosed.

Vendor Name(s):
Toshiba International Corporation
Industrial Division
Houston, TX
Telephone: 713-466-0277
FAX: 713-896-5225
Email: 800-231-1412

Installation(s):
Blue Plains AWTP, Washington, D.C.

Key Words for Internet Search:
Microwave Density Analyzer, LQ500, LQ300, LQ510

Data Sources:
Engineering Program Management Consultancy Services, CH2M HILL, Parsons, "Evaluation of the Test Results for the Microwave Sludge Density Meter at the Gravity Sludge Thickener (GST) No. 7," Blue Plains AWTP, Interoffice Memorandum, 2006.

Toshiba web site: http://www.toshiba.com/ind/product_display

Water Quality *updated 2012* **Technology Summary**

Nutrient Analyzers, Probes, and Electrodes

Objective:

In situ, real-time measurement of ammonia, nitrate, orthophosphate, and total phosphorus concentration for process monitoring and control of nitrification, denitrification, and phosphorus removal.

State of Development:

Innovative.

Description:

Analyzers

Analyzers pump a small amount of sample to a device where reagents are involved usually to produce a color-generating reaction that is then measured for intensity to determine concentration. These devices are available for ammonia, phosphate, and total phosphorus.

Metrohm-Applikon Alert: This colorimetric analyzer uses differential absorbance colorimetry to determine ammonia, nitrate, nitrite, or phosphorus. The Alert colorimeter takes as color measurement using long life LEDS, first to establish the initial color and after reagent addition to determine the developed color. The differential technique compensates for fouling of the cell and for initial sample color.

WTW Trescon: This is an analyzer for orthophosphate or total phosphorus. The orthophosphate analyzer uses the vanadate/molybdate method to color the sample yellow. The color intensity is measured photometrically and reported as phosphorus content. Ranges are 0.05 to 3.00 mg P/L, 0.1 to 10 mg P/L, or 0.1 to 25 mg P/L. For total phosphorus analysis, a digestion unit is required to provide a chemical-thermal digestion that will convert all phosphorus in the sample to phosphate. The phosphate is measured using the molybdenum blue method. Ranges are 0.01 to 3.00 mg P/L, and 0.3 to 100 mg P/L.

ChemScan UV Series: This consists of an online single or multiple parameter analyzers using full-spectrum UV-visible detection with chemometric analysis of spectral data. Multiple sample lines allow sampling from several locations to the same analyzer. The analyzer is script driven and can perform rapid sequential analysis with or without the assistance of chemical reagents. Nitrate analysis or a separate analysis (or both) of nitrite are performed according to the direct analysis of spectra from the sample. Ammonia analysis is reagent-assisted using bleach and hydroxide reagents. The analyzer contains an internal manifold to provide automatic zeroing, cleaning, and managing multiple sample lines. A variety of accessories are available, including sample pumps, filters, and external controllers.

Hach AMTAX: This consists of an ammonia sampler with gas-sensitive electrode, low range 0.5 mg/L to 20 mg NH3-N/L at 3 percent accuracy. It samples at an adjustable frequency of 5 to 120 minutes, mixes the sample with sodium hydroxide to convert all ammonium to free ammonia, expels ammonia gas from sample, redissolves it in the indicator reagent and measures color with a colorimeter. It then pumps the sample to the analyzer which is mounted out of process. The analyzer requires a consumable reagent.

Hach PHOSPHAX: This is a continuous flow analyzer for ortho-Phosphate using the photometric methods with vanado-molydan. It has a five minute cycle time for each measurement and allows for adjustable intervals from 5 minutes to 120 minutes. Measurement range is 0.05 - 15 mg/L PO4-P. Accuracy at the low range is 2% ± 0.05 mg/L. The unit features daily automatic cleaning and calibration.

UV/Vis Probes

WTW NitraVis®: This consists of in situ, real-time spectral measurement (UV and Visibility [VIS] range of 200 to 750 nm) of nitrate concentration without filtering. Interferences, such as those caused by turbidity, are detected and compensated for. The process operates in media at temperatures of at least 32°F, with a pH between 4 and 9, and contains less than 5,000 mg/L chloride. Automatic cleaning occurs with compressed air before each measurement. The measuring range is 0.1 to 100 mg/L NO_3-N with accuracy of ±3 percent.

Hach Evita: This nitrate probe uses UV absorption to measure nitrate concentration. The probe is immersed in wastewater and the ion-specific membrane allows the appropriate ions to be transferred to the carrier solution so no sample preparation is necessary and interference from bacteria and particles is virtually

Nutrient Analyzers, Probes, and Electrodes (continued)

eliminated. It uses deionized water that needs to be refilled every 10 weeks. The measuring range is 2 to 50 mg/L NO_3-N with accuracy of ±10 percent. It can take readings about every 13 minutes.

Hach NITRATAX: This probe is based on UV light absorption. The photometer measures the primary UV 210 beam, and a second beam at 350 nm provides a reference standard. Measuring range is 0.1 to 100 mg/L NO_3-N at 5 percent accuracy. It includes a self-cleaning wiper system.

Ion Selective Electrodes

WTW ISE: Direct immersion ion selective electrodes (ISEs) are available in combination ammonium/nitrate (VARiON), ammonium with potassium compensation, and nitrate with chloride compensation. These all provide continuous measurement of process concentrations. Ranges are 0.1 to 100 mg/L or 1 to 1,000 mg/L as nitrogen for either parameter.

Biochem/Myratek Sentry C-2: This electrode is based on ISE technology. A sample is isolated in the measuring chamber and ammonia and the nitrate values established. Calibration using the standard addition method is performed automatically at user-set intervals. Installation takes less than 1 hour; maintenance less than 15 minutes per week.

Hach NH_4D Ammonium Probe: This consists of direct immersion ISE for measuring ammonium from 0.2 to 1,000 mg/L NH_4-N with 5 percent accuracy. Potassium interference is compensated by including a potassium ISE. Provides continuous measurement. Can be provided with optional air cleaning system to reduce maintenance frequency.

Endress + Hauser ISEMax: The ISEMax unit uses a single probe to measure both ammonium and nitrate continuously using ISE technology. The range is 0 to 1,000 mg/L ammonium-N, 0.1 to 1,000 mg/L nitrate-N. Up to three electrodes can be included in a single probe.

Comparison to Established Technologies:

Monitoring used to be done by taking samples and analyzing them for various parameters in laboratories. Lab analyses take time, and one cannot resolve a problem until the results are gathered. These monitoring technologies provide real-time or near real-time conditions in the treatment system through continuous monitoring. Immediate feedback helps operators immediately take corrective action if a shock or toxic load occurs. It can also allow for timely process adjustments that can reduce energy consumption and chemical usage where applicable.

ISEs are generally the lowest cost to purchase and maintain. Ammonia ISE probes can be purchased for $6,500 to $15,000. Analyzers are most costly and maintenance intensive but could be useful for compounds for which ISE probes are not available.

Available Cost Information:

Approximate Capital Cost: Equipment costs vary from approximately $6,000 to $25,000 depending on capabilities and features.
Approximate O&M Costs: Costs vary with frequency of calibration requirements, cleaning, and analyzer reagents. Analyzers have greatest operation and maintenance followed by UV/VIS. ISEs are least costly to maintain.

Vendor Name(s):

Metrohm-Applikon

De Brauwweg 13
PO Box 149
3100 AC Scheidam
The Netherlands
Telephone: +31 10 298 35 55
Email: analyzers@metrohm-applikon.com

Installation(s):

Many installations are throughout the US:
Metrohm-Applikon
Hampton Roads Sanitation District
Norfolk, VA

Hach AMTAX
Messerly WWTP
Augusta, GA

Water Quality *updated 2012* **Technology Summary**

Nutrient Analyzers, Probes, and Electrodes (continued)

ASA/ChemScan
2325 Parklawn Drive, Suite I
Waukesha, WI 53186
Telephone: 262-717-9500
Email: info@chemscan.com
Web site: http://www.chemscan.com

Myratek, Inc. – BioChem Technology, Inc.
3620 Horizon Drive, Suite 200
King of Prussia, PA 19406
Telephone: 610-768-9360
Email: sales@biochemtech.com
Web site: http://www.biochemtech.com

WTW, Inc.
P.O. Box 9010
151 Graham Road
College Station, TX 77842
Telephone: 979-690-5561
Fax: 979-690-0440
Email: info@wtw-inc.com
Web site: http://www.wtw.com

Hach Company
P.O. Box 389
Loveland, CO 80539-0389
Telephone: 800-227-4224
Web site: www.hach.com

Chemscan
Curren WWTP
Tampa, FL

Biochem Sentry C-2
23rd Avenue WWTP
Phoenix, AZ

South Cross Bayou WRF
St. Petersburg, FL

Wastewater Treatment Plant
Enfield, CT

Wastewater Treatment Plant
Abington, PA

Key Words for Internet Search:

Water monitoring, wastewater, ammonia, nitrates, probe, online analysis, ion selective electrode

Data Sources:

Misiti, John Hach, “UV Spectrum Based NOx Monitors,” paper.

Web site sources:
http://www.chemscan.com

http://biochemtech.com

http://www.hach.com

http://www.wtw.com

http://www.roycetechnologies.com

Vendor-supplied information.

Microbial Activity *prepared 2008* **Technology Summary**

Biological Micro-Electro-Mechanical Systems (BioMEMS)

Objective:

Biological Micro-Electro-Mechanical Systems (BioMEMS) are aimed at rapid testing of biomolecules that are indicative of an upset process.

State of Development:

Emerging.

Description:

BioMEMS are being developed for the faster detection of upset signs in a bioprocess by using microchips or integrated circuits that can detect and quantify the biomolecules that cause process upsets. The systems aim at detecting the changes in the microbial activities that are caused by a shock load or toxicity. BioMEMS can be a very useful in predicting operational problems before they occur, such as bulking, foaming, and detecting, which cause operational problems because of changes to microbial population.

Comparison to Established Technologies:

Not similar to any established technology.

Available Cost Information:

Approximate Capital Cost: Unknown.
Approximate O&M Costs: Unknown.

Vendor Name(s):

University of Cincinnati
Water Quality Biotechnology Program
Room 765, Baldwin Hall, Box 210071
Cincinnati, OH 45221-0071
Telephone: 513-556-3670
Email: daniel.oerther@uc.edu or chong.ahn@uc.edu
Web sites: www.wqb.uc.edu or www.biomems.uc.edu

Installation(s):

There are no installations in the United States at this time.

Key Words for Internet Search:

BioMEMS, wastewater, biomechanics, biological micro-electro-mechanical systems

Data Sources:

Web site sources are as follows:

www.biomems.uc.edu

www.memsnet.org

Microbial Activity *prepared 2008* **Technology Summary**

Fluorescence In Situ Hybridization (FISH) for Phosphorus Accumulating Organisms (PAOs)

Objective:

Identify specific microorganisms in wastewater.

State of Development:

Emerging.

Description:

Bacteria in activated sludge contain DNA as unique genetic material. DNA sequences unique to individual groups of microorganisms can be used to identify specific microorganisms in samples that contain a mixture of many different types of microorganisms. The process of identifying specific PAOs is part of the full-cycle 16S rRNA approach using FISH. Fluorescently labeled 16S rRNA probes are hybridized, stained, and observed under an epifluorescent microscope. This document discusses the on-line version, not the field test kit.

Comparison to Established Technologies:

The FISH for PAOs microbial detection process is able to positively identify specific microorganisms in a mixed culture. Previously, microbiological tests performed in a laboratory were necessary to identify and enumerate bacteria. This process provides real-time feedback, over laboratory tests that take hours or even days for results.

Available Cost Information:

Approximate Capital Cost: Unknown.
Approximate O&M Costs: Unknown.

Vendor Name(s):

Department of Civil and Environmental Engineering at the following universities:

University of Illinois at Urbana-Champaign

University of Cincinnati

North Carolina State University

Installation(s):

There are no known installations.

Key Words for Internet Search:

Fluorescence In Situ Hybridization (FISH), 16S rRNA, full-cycle 16S rRNA approach, phylogeny

Data Sources:

Amann, R. I., L. Krumholz, and D. A. Stahl, “Fluorescent-Oligonucleotide Probing of Whole Cells for Determinative, Phylogenetic, and Environmental Studies in Microbiology,” Department of Veterinary Pathobiology, University of Illinois, Urbana, IL 61801, Journal of Bacteriology, 172(2), pp. 762–770, February 1990.

Amann, Rudolf, “Monitoring the Community Structure of Wastewater Treatment Plants: A Comparison of Old and New Techniques,” Max-Planck Institut für Marine Mikrobiologie, Arbeitsgruppe Molekulare Ökologie, Celsiusstr. 1, D-28359 Bremen, Germany, FEMS Microbiology Ecology, Volume 25, Issue 3, p. 205, March 1998.

Daims, Holger, Niels B. Ramsing, Karl-Heinz Schleifer, and Michael Wagner, “Cultivation-Independent, Semiautomatic Determination of Absolute Bacterial Cell Numbers in Environmental Samples by Fluorescence In Situ Hybridization,” Lehrstuhl für Mikrobiologie, Technische Universität München, 85350 Freising, Germany, and Department of Microbial Ecology, Institute of Biological Sciences, University of Aarhus, 8000 Aarhus, Denmark, Applied and Environmental Microbiology, pp. 5,810–5,818, Vol. 67, No. 12, December 2001.

Microbial Activity *prepared 2008* **Technology Summary**

Handheld Advanced Nucleic Acid Analyzer (HANAA)

Objective:

Real-time detection of pathogens in water and wastewater.

State of Development:

Emerging.

Description:

HANAA uses the genetic material of microorganisms in wastewater by performing a Polymerase Chain Reaction (PCR) to detect pathogens. PCR is a technique for enzymatically replicating DNA without using a living organism, such as *E. coli* or yeast. Like amplification using living organisms, this technique allows for a small amount of DNA to be amplified exponentially. The HANAA is a miniature thermal cycler, which can perform PCR in real time.

Commercially these products are available as Bio-Seeq™ and RAZOR®, although they are mostly being used for bioterrorism monitoring purposes.

Comparison to Established Technologies:

HANAA can be compared to a thermal cycler that is used in laboratories performing extensive molecular biology work. HANAA is a portable version of the thermal cycler and therefore, has the benefit of being used in field where monitoring needs to be performed, without extensive sampling and laboratory analysis time.

Available Cost Information:

Approximate Capital Cost: Unknown.
Approximate O&M Costs: Unknown.

Vendor Name(s):

Smiths Detection
Telephone: 1-908-222-9100
Web site: www.smithsdetection.com

Idaho Technology Inc.
390 Wakara Way
Salt Lake City, UT 84108
Telephone: 801-736-6354 or 800-735-6544
Fax: 801-588-0507
Email: it@idahotech.com
Web site: www.idahotech.com

Installation(s):

Information not available about the installations.

Key Words for Internet Search:

Bio-Seeq™, Smiths Detection, Handheld Advanced Nuclei Acid Analyzer, HANNA

Data Sources:

Higgins, James, “Handheld Advanced Nucleic Acid Analyzer (HANAA) for Waterborne Pathogen Detection,” WERF publication, USDA, 2001.

www.smithsdetection.com

Telephone conversation with the vendor.

Microbial Activity *prepared 2008* **Technology Summary**

Immunosensors and Immunoassays

Objective:

Use antigen- antibody interaction to identify the presence of toxins in wastewater.

State of Development:

Emerging.

Description:

Immunosensors and immunoassays involve antibodies that bind to a specific antigen noncovalently. Sensors and assays are designed to detect these interactions through a range of transducer options. The most popular immunoassay system in use is the Enzyme-Linked ImmunoSorbent Assay (ELISA). Environmental application includes analyzing selected contaminants such as pesticides and polyaromatic hydrocarbons. ELISAs include an antibody or antigen bound on a titer plate and an unbound reagent labeled with an enzyme that produces a signal in the presence of a specified substrate.

Comparison to Established Technologies:

This is not similar to any established technology.

Available Cost Information:

Approximate Capital Cost: Unknown.
Approximate O&M Costs: Unknown.

Vendor Name(s):

Not available commercially for wastewater applications.

Installation(s):

There are no known installations.

Key Words for Internet Search:

ELISA, antibody-antigen, immunosensors, and immunoassays

Data Sources:

Love, Nancy and Charles Bott, “A Review and Needs Survey of Upset Early Warning Devices,” WERF publication, 2000.

Water Quality *prepared 2008* **Technology Summary**

Photo-electro Chemical Oxygen Demand (PeCOD™)

Objective:

Determine Chemical Oxygen Demand (COD) of wastewater without extensive laboratory process.

State of Development:

Emerging.

Description:

Photo-electro Chemical Oxygen Demand (PeCOD™) technology can measure photo-current charge originating from the oxidization of soluble organic species contained in a sample. The PeCOD™ technology is able to photo-electrochemically generate an electrical signal that directly correlates, via mass balance, with the soluble oxidizable organic species contained in wastewater samples. The core of the technology is the ability of the UV-activated nano-particulate photocatalyst semi-conductive electrode to create a high-oxidation potential that ensures complete oxidation of all soluble oxidizable organic species. This technology has the ability to capture and measure the resultant photo-current. The PeCOD™ online analyzer has been used to monitor soluble COD in municipal wastewater treatment plants. Real-time soluble COD event-monitoring enables efficient secondary treatment and reduces operational and discharge costs in regional plants vulnerable to COD surges from industrial sources.

Comparison to Established Technologies:

The photoelectric COD sensor has short analysis time, is simple to use, has low impact to the environment, and has a long sensor life. It provides real-time results in as low as 30 seconds to overcome the problems of time delay encountered by chemical oxidation methods. High sensitivity and wide linear range is obtained by direct signal acquisition. Measures soluble COD only.

Available Cost Information:

Approximate Capital Cost: Not available.
Approximate O&M Costs: Not available.

Vendor Name(s):

Aqua Diagnostic Pty Ltd.
Level 1, 159 Dorcas Street
South Melbourne, Victoria 3205
Australia
Telephone: 61 3 8606 3424
Fax: 61 3 9686 9866
Email: info@aquadiagnostic.com
Web site: http://www.aquadiagnostic.com

East China Normal University
Litong Jin
Department of Chemistry
Shanghai 200062
People's Republic of China.

Installation(s):

There are no installations.

Key Words for Internet Search:

Photo-electro Chemical Oxygen Demand, PeCOD™, Aqua Diagnostic

Data Sources:

Aqua Diagnostic, "PeCOD™ COD Analyzer Delivers Rapid, Reliable and Accurate On-Line COD Monitoring, Technology." Journal Abstract, "Ti/TiO_2 Electrode Preparation Using Laser Anneal and its' Application to Determination of Chemical Oxygen Demand," Electroanalysis, Volume 18, Issue 10, pp. 1,014–1,018.

Chapter 6

Energy Conservation Measures

6.1 Introduction

Energy consumption for municipal wastewater treatment accounts for 15% to 30% of the operating cost at large treatment facilities and 30% to 40% at small facilities (WEF, 2009). Energy is required throughout the wastewater treatment process and facilities, with aeration, pumping and solids management operations typically accounting for the greatest share of a utility's energy use. The demand and cost of this energy to a wastewater utility continues to rise due to a number of factors including:

- Implementation of increasingly stringent discharge requirements.
- Enhanced treatment of biosolids, including drying and pelletizing.
- Higher pumping and treatment requirements and costs associated with increased infiltration and inflow from aging wastewater collection systems.
- Increasing electricity rates associated with the cost of fossil fuels used for energy production and with construction of new electric power generating and distribution infrastructure to meet increasing demand.

As a consequence of rising energy demand and costs, many wastewater facilities have developed energy management strategies and implemented energy conservation measures (ECMs) to reduce their energy consumption and costs as well as reduce their carbon footprint and associated greenhouse gas emissions. ECMs are herein defined as energy efficient equipment retrofits, operational modifications, and process control enhancements whose implementation leads to reduced energy consumption and costs and often, improved treatment efficiency. This chapter focuses on the advances in ECMs used at wastewater facilities, particularly those that have been developed and implemented since 2008. Other ECMs and energy conservation approaches are discussed in "Evaluation of Energy Conservation Measures for Wastewater Treatment Facilities" (EPA 832-R-10-005).

6.2 Technology Assessment

A summary of several innovative, emerging and established ECMs is provided in Table 6.1. Individual technology summary sheets with performance and cost/savings* information are included for several innovative and emerging ECMs documented in the literature. (* Capital costs shown in this chapter may include other needed facilities and/or ancillary equipment needed to implement the ECM and may have been derived from the total cost of a larger project. In some cases, installation costs may not be available and not be included. Capital and O&M costs as well as energy savings are site specific and equipment specific and can vary significantly. For details on the basis of some of the reported costs, please consult the EPA

document referenced (in section 6.1 above) in this chapter which is available at *http://water.epa.gov/scitech/wastetech/upload/Evaluation-of-Energy-Conservation-Measures-for-Wastewater-Treatment-Facilities.pdf.*)

Many energy conservation measures are established and essential measures relating to efficient pumping systems including pumps, drives and motors. In addition, established ECMs include fine bubble diffuser systems that increase the oxygen transfer efficiency, thereby decreasing energy demand. Established aeration equipment includes highly efficient turbo blowers which use friction-free bearing designs coupled with the use of high efficiency motors and integral speed control to achieve high energy efficiency. Established reactor mixing systems include hyperbolic mixers which use a stirrer located close to the bottom of a tank to promote complete mixing.

Innovative development in energy conservation measures mainly focus on aeration system control or efficient equipment. Aeration control ECMs includes the Integrated Air Flow Control system which eliminates the pressure control loop common in many automatic DO control systems leading to more efficient blower operation and reduced energy consumption. Also included is the Automated SRT/DO Control ECM which uses algorithms to optimize DO and SRT set points and reduce energy consumption while maintaining process performance. A pulsed large bubble mixing system is included which achieves mixing requirements and reduced energy consumption by using short bursts of compressed air instead of mechanical mixers. Control of aeration for nitrification processes based on ammonia concentration is also being applied and will be included in a future version of this report.

Knowledge about technologies tends to evolve. The information provides a snapshot at a point in time; what is understood at one point in time may change as more information develops. This includes knowledge about operating mechanisms as well as the relative and absolute costs and features of a particular technology. Inquiries into the current state of knowledge are an important step when considering implementation of any technology.

Table 6.1—Energy Conservation Measures – State of Development

Established Technologies (technology summaries not included)	
Aeration	
Adjustment of Submergence of Mechanical Aerators	
Bioprocess Intelligent Optimization System (BIOS)	
Cycling Mechanical Aerators On and Off	
Fine-Pore Aeration Diffusers	
High Speed (Gearless) Turbo Blowers	
Mixing	
Hyperbolic Mixers	
Pumping	
NEMA Premium® efficiency motors	
Variable Frequency Drives (VFDs)	
Other Processes	
Incineration Heat Recovery	
Innovative Technologies	**Summary on page**
Aeration	
Automated SRT/DO Control	6-4
Dual Impeller Aerator (mechanical mixing)	6-5
Integrated Air Flow Control	6-6
Single-stage Centrifugal Blowers with Inlet Guide Vanes and Variable Diffuser Vanes	6-8
Mixing	
Intermittent Mixing	6-10
Pulsed Large Bubble Mixing	6-11
Pumping	
Pump Control Optimization	6-12
Adaptive Use Technologies	
None at this time	NA
Emerging Technologies	**Summary on page**
Aeration	
Critical Oxygen Point Control	6-13
Membrane Air Scour Alternatives	6-14
Ultra-fine Bubble Diffusers	6-16
Disinfection	
Automated Channel Routing for UV Disinfection	6-18
Low Pressure High Output Lamps for UV Disinfection	6-19
Other Processes	
Solar Drying of Sewage Sludge	6-20
Research Technologies	
None at this time	

Aeration *prepared 2012* **Technology Summary**

Automated SRT/DO Control

Objective:

Optimization and automatic control of dissolved oxygen (DO) and sludge age (SRT) in aeration systems to optimize DO and SRT set points and reduce energy consumption while maintaining process performance.

State of Development:

Innovative. The OPTIMaster™ algorithm is approaching an established process while SRTMaster™ has been implemented for over 12 years and DOmaster™ was implemented over 8 years.

Description:

Proprietary algorithms (OPTIMaster™), (DOmaster™) and (SRTMaster™) which provide set point optimization, based on actual data and process variables: sludge modeling, plant historical data, and statistical process control. The software utilizes a biological process model based control algorithms for sludge age and DO and automates control of these parameters (through automatic sludge wasting and blower output adjustment) to optimize aeration. OPTIMaster™, DOmaster™ and SRTMaster™ could be used separately or together.

Comparison to Established Technologies:

This technology represents an improvement to conventional technology as follows:

SRTMaster™ allows the automatic control of SRT and equalization of mass solids loading on thickening facility, improving activated sludge process stability and reducing energy usage and chemicals use for sludge thickening. DOmaster™ is an improvement over traditional DO control because it provides more robust control by using activated sludge modeling and data mining instead of traditional PID control. OPTIMaster™ allows automatic selection of DO and SRT set points. The criteria for selection are reduction of energy usage while maintaining low effluent suspended solids concentration and absence of foam.

All software modules have artificial intelligence features used for alerting operators about meter problems (TSS, DO, Flow) as well as changes in process BOD loadings or migration of solids to the clarifiers.

Available Cost Information:

Project Cost of $135,000 for a 22.4 MGD plant (average daily flow) with average energy savings of $26,980/yr and a simple payback period of 5 years.

Vendor Name(s):

Ekster and Associates Inc.
1904 Lockwood Ave.
Fremont, CA 94539
Telephone: 510-657-7066
Email: info@srtcontrol.com

Installation(s):

Oxnard Wastewater Treatment Plant
6001 Perkins Road
Oxnard, CA 93033-9047
Telephone: 805-488-3517
Email: Mark.Moise@ci.oxnard.ca.us

Key Words for Internet Search:

DO control algorithm, SRT control algorithm, OPTIMaster™, SRTMaster™, DOmaster™, wastewater treatment, Ekster

Data Sources:

Oxnard Wastewater Treatment Plant

Mark Moise, Alex Ekster, Operation of a Solids Contact Tank at Low Dissolved Oxygen and Low Total Suspended Solids Concentrations, Proceedings of WEFTEC, Conference and Exposition, San Diego, 2007.

USEPA (2010) Evaluation of Energy Conservation Measures for Wastewater Treatment Facilities. Office of Water. EPA 832-R-10- 005 September 2010.

http://water.epa.gov/scitech/wastetech/upload/Evaluation-of-Energy-Conservation-Measures-for-Wastewater-Treatment-Facilities.pdf.

Aeration *prepared 2012* **Technology Summary**

Dual Impeller Aerator (mechanical mixing)

Objective:

Provide additional mixing energy near the floor of an aeration basin, permitting greater power turndown when a VFD is used and an associated energy savings.

State of Development:

Innovative.

Description:

A dual impeller aerator by Ovivo (formerly Eimco Water Technologies) includes a lower impeller near the bottom of the basin floor to augment the surface impeller. This provides additional mixing energy near the floor of the basin, permitting greater power turndown when a VFD is used and an associated energy savings.

Comparison to Established Technologies:

Improved energy efficiency compared to single impeller mechanical aerators which are limited in their turn down due to the need to keep the contents of the basin from settling.

Available Cost Information:

Not available.

Vendor Name(s):

Ovivo USA
(Formerly Eimco Water Technologies LLC)
2404 Rutland Drive
Austin, TX 78758
Telephone: 512-834-6000
Fax: 512-834-6039
Email: info.US@ovivowater.com

Installation(s):

Information not available.

Key Words for Internet Search:

Dual impeller, turn down, basin floor mixing, energy efficient mixing

Data Sources:

USEPA (2010) *Evaluation of Energy Conservation Measures for Wastewater Treatment Facilities*. Office of Water. EPA 832-R-10- 005 September 2010.

http://water.epa.gov/scitech/wastetech/upload/Evaluation-of-Energy-Conservation-Measures-for-Wastewater-Treatment-Facilities.pdf

Aeration *prepared 2012* **Technology Summary**

Integrated Air Flow Control

Objective:

Integrated Air Flow Control is a proprietary aeration control system which can result in better stability and simplified tuning of the aeration system process leading to more efficient blower operation and reduced energy consumption.

State of Development:

Innovative. This technology is being used in the US and is approaching an established process.

Description:

This technology uses modern control capabilities to integrate basin and blower air control into a coherent strategy that eliminates the pressure control loop common in many automatic DO control systems. Traditional automatic dissolved oxygen (DO) control systems usually include four control loops: DO Control at the aeration basins, air flow control at the aeration basins, pressure control at the common air header, and air flow control at each blower. The discharge pressure control loop in traditional systems is used to stabilize air flow to individual aeration tanks and is often specified as part of the blower controls to adjust the air flow based on changes in DO. Since the relationship between actual oxygen transfer efficiency and air flow rate is non-linear and dependent on a number of changing factors, it is not possible to properly define a specific air rate that should be associated with a specific change in DO concentration. This coupled with the long process response time associated with DO control can cause instability in the operation of the blowers and control valves (cyclic oscillation, or hunting) as the control system attempts to adjust air flow and pressure in response to changes in the process and ambient air conditions

The Integrated Air Flow Control System eliminates the pressure control loop. Air valves at individual tanks are used to distribute total air flow from the blowers proportionally to total demand. Blowers are controlled to provide the total system air flow required to meet total process demand. System pressure, which is the result of changing air flow and changing system restriction, is allowed to rise and fall as the friction losses change. The result is better stability, simplified tuning, and more efficient blower operation. In addition, a unique most open valve (MOV) logic is used to minimize system restriction and optimize header pressure by maintaining one valve — the MOV valve — at maximum position at all times. This further reduces the wasted energy resulting from constant pressure control.

Comparison to Established Technologies:

This technology represents an improvement to previous automated control systems that use cascaded control strategy that includes a pressure control loop's output as a setpoint for blower air control. Energy savings on the order of 10% have been reported from implementing this technology.

Available Cost Information:

Project Cost of $200,000 (2007 Dollars) for a 23.7 MGD plant (average daily flow) with average energy savings of $135,786/yr and a simple payback period of 1.5 years.

Vendor Name(s):

Dresser Roots
2135 Hwy 6 South
Houston, TX 77077
281-496-8100
www.rootsblowers.com

Installation(s):

Bucklin Point WWTF/United Water
102 Campbell Avenue
East Providence, RI 02916

Brent Herring, Superintendent
401-434-6350 X-182

Key Words for Internet Search:

Do control, blower control, wastewater treatment, Dresser

Aeration *prepared 2012* **Technology Summary**

Integrated Air Flow Control (continued)

Data Sources:

Bucklin Point WWTF/United Water

USEPA (2010) *Evaluation of Energy Conservation Measures for Wastewater Treatment Facilities*. Office of Water. EPA 832-R-10- 005 September 2010.

http://water.epa.gov/scitech/wastetech/upload/Evaluation-of-Energy-Conservation-Measures-for-Wastewater-Treatment-Facilities.pdf

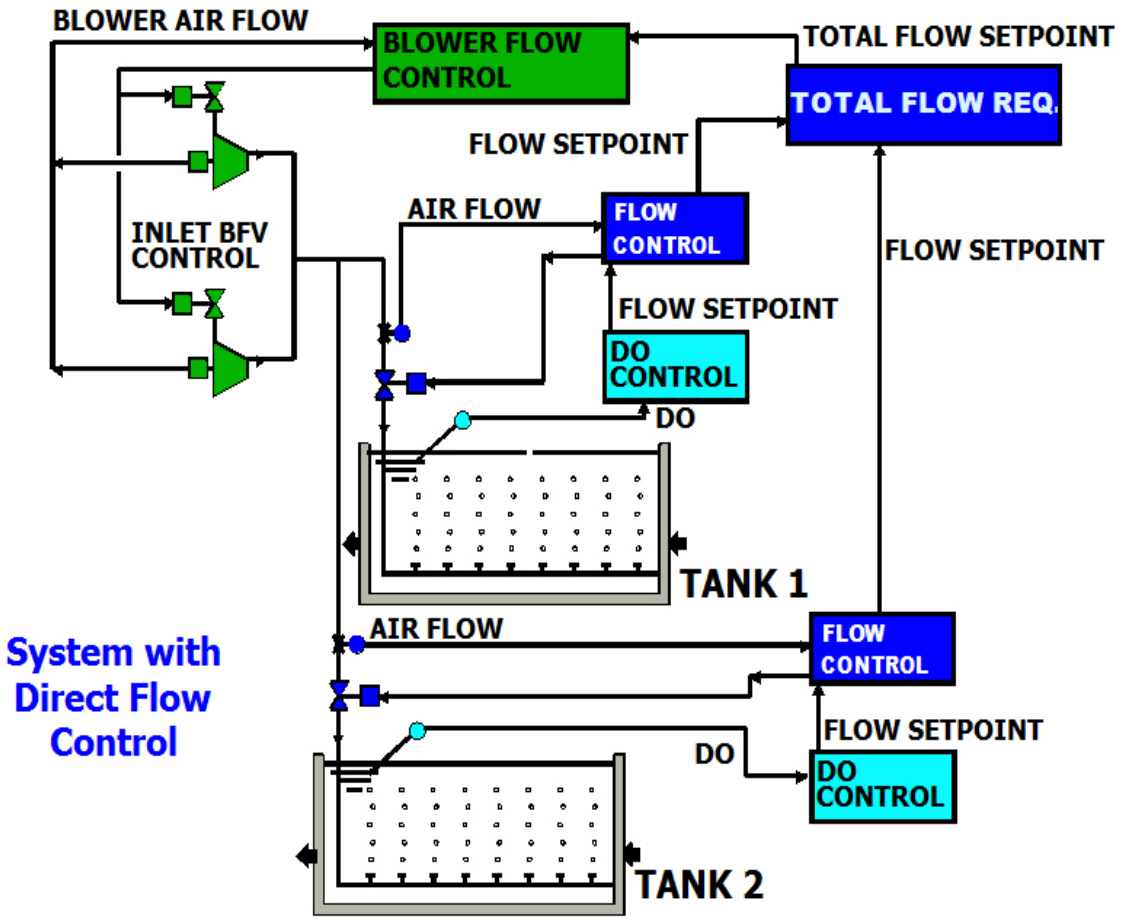

Aeration *prepared 2012* **Technology Summary**

Single-stage Centrifugal Blowers with Inlet Guide Vanes and Variable Diffuser Vanes

Objective:

Utilizing inlet guide vanes and variable outlet vane diffusers on a single stage centrifugal blower makes it possible to operate the blower at its highest efficiency point.

State of Development:

Innovative (some, but not all turbocompressors, are innovative).

Description:

Single-stage centrifugal blowers equipped with inlet guide vanes pre-rotate the intake air before it enters the high speed blower impellers. This reduces flow more efficiently than throttling. Blowers that are also equipped with variable outlet vane diffusers have improved control of the output air volume. Utilizing inlet guide vane and discharge diffusers on a single-stage centrifugal blower makes it possible to operate the blower at its highest efficiency point, not only at the design condition but also within a greater range outside of the design condition. A programmable logic controller (PLC control) can be used to optimize inlet guide vane operation (i.e., positioning) based on ambient temperature, differential pressure, and machine capacity. Automated DO and variable header pressure control can increase efficiency.

Comparison to Established Technologies:

Increased energy efficiency compared to positive displacement blowers. Can be less maintenance intensive, and can result in lower monitoring/operational costs if properly automated.

Available Cost Information:

Project Cost of $901,000 for an 11.8 MGD plant (average daily flow) with average energy savings of $63,889/yr and a simple payback period of 14 years.

Vendor Name(s):

Siemens Industry, Inc.

Water Technologies

Telephone: 866-926-8420 or 724-772-1402

Web: www.water.siemens.com

Installation(s):

Sheboygan Regional Wastewater Treatment Plant

3333 Lakeshore Drive

Sheboygan, WI 53081

Dale Doer

Wastewater Superintendent

Telephone: 920-459-3464

Single Stage,
Email: Dale.doerr@sheboyganwwtp.com

Key Words for Internet Search:

Single Stage Blower, Inlet Guide Vanes, Variable diffuser Vane

Data Sources:

USEPA (2010) *Evaluation of Energy Conservation Measures for Wastewater Treatment Facilities*. Office of Water. EPA 832-R-10- 005 September 2010.

http://water.epa.gov/scitech/wastetech/upload/Evaluation-of-Energy-Conservation-Measures-for-Wastewater-Treatment-Facilities.pdf

Aeration *prepared 2012* **Technology Summary**

Single-stage Centrifugal Blowers with Inlet Guide Vanes and Variable Diffuser Vanes (continued)

Single-Stage Centrifugal Blower with Inlet Guide Vanes and Variable Diffuser Vanes by Turblex® (now part of Siemens Energy). Used with permission.

Mixing *prepared 2012* **Technology Summary**

Intermittent Mixing

Objective:

Reduce energy usage for maintaining solids in suspension in biological nutrient removal reactors and mixed liquor channels.

State of Development:

Innovative. This technology is being used in the US and was implemented at a US plant in 2008.

Description:

An optimization algorithm is used to convert mixing in the anoxic/anaerobic zones of BNR reactors and mixed liquor channels from continuous to intermittent (On/Off). This patent pending method of maintaining solids in suspension allows reduced energy usage without compromising effluent quality and process reliability. A special programming routine is used to avoid aeration control system oscillation. The routine sequences the tanks rather than simultaneously providing air to all the tanks to re-suspend solids. Aeration system modifications are often required including installation of new valves, actuators, pneumatic lines, and electrical systems, in addition to control system programming.

Comparison to Established Technologies:

As shown below, the intermittent mixing provides significant energy savings compared to the continuous mixing method.

Available Cost Information:

Project Cost of $181,592 for a 167MGD plant (average daily flow) at the San Jose/Santa Clara Water Pollution Control Plant, with average energy savings of $757,614 and a simple payback period of 3 months. This corresponds to reduction in associated aeration energy in the range of 23% and 38%. Another study showed pulse aeration of anaerobic and anoxic zones resulted in 13% less aeration demand with an annual energy saving potential close to $430,000.

Vendor Name(s):

Ekster and Associates Inc.

1904 Lockwood Ave.

Fremont, CA 94539

Telephone: 510-657-7066

Email: info@srtcontrol.com

Installation(s):

San Jose/ Santa Clara Water Pollution Control Plant (SJ/SC WPCP)

700 Los Esters Rd.,

San Jose, CA 95134

Bhavani.Yerrapotu, Division Manager

Telephone: 408-945-5300

Email: Bhavani.Yerrapotu @sanjoseca.gov

Key Words for Internet Search:

Pump stations, Pumping, Pumps Scheduling, Ekster

Data Sources:

San Jose/ Santa Clara Water Pollution Control Plant

Issayas T. Lemma, Steve Colby, Tom Herrington. *Pulse Aeration of Secondary Aeration Tanks Holds Energy Saving Potential without Compromising Effluent Quality* Proceedings of 82nd WEFTEC, Conference and Exposition, Orlando, 2009.

USEPA (2010) *Evaluation of Energy Conservation Measures for Wastewater Treatment Facilities*. Office of Water. EPA 832-R-10- 005 September 2010. http://water.epa.gov/scitech/wastetech/upload/Evaluation-of-Energy-Conservation-Measures-for-Wastewater-Treatment-Facilities.pdf.

Mixing *prepared 2012* **Technology Summary**

Pulsed Large Bubble Mixing

Objective:

An innovative mixing technology by Enviromix called BioMx® reduces energy required for anoxic or anaerobic zone mixing by firing short bursts of compressed air into the zone instead of mechanically mixing it.

State of Development:

Innovative.

Description:

Uniquely designed nozzles produce a mass of large air bubbles, ranging from marble to softball size, which mix the water as they rise to the surface. The large air bubbles, much larger than those made by coarse bubble diffusers, are designed to minimize oxygen transfer and maintain anoxic or anaerobic conditions. The system includes a PLC to manage the timing of the air control valve firing, which gives the operator flexibility to respond to different conditions within the tank.

Comparison to Established Technologies:

Testing at the F. Wayne Hill Water Resources Center in Gwinnett County, Georgia showed that energy (in kW) required to mix one anaerobic cell using the BioMx® system was 45 percent less than the energy required by a submersible mixer. Also, when operated in three cells using the same compressor, 60 percent less energy was required. The manufacturer reports that the system has non-clogging, self cleaning in-tank components that require no maintenance.

Available Cost Information:

Not available.

Vendor Name(s):

EnviroMix

180 East Bay Suite 200

Charleston, SC 29401

Telephone: 843-573-7510

Fax: 843-573-7531

Email: sales@enviro-mix.com

Installation(s):

Testing done at the F. Wayne Hill Water Resources Center in Gwinnett County, Georgia in 2009-2010 and at the ReWa Mauldin Road WWTP in Greenville SC in 2011. Installed at the Hopewell Regional Treatment Facility, Hopewell, VA and the Center Street WWTP Mt Pleasant SC.

Key Words for Internet Search:

Coarse bubble, Pulse mixing

Data Sources:

Randall, C.W. and W. O. Randall. 2010. *Comparative Analysis of a Biomix System and a Submersible Propeller Mixer: Mixing in Anaerobic Zones at the F. Wayne Hill Water Resources Center, Buford, Georgia*. (Report provided in an e-mail from Clifford W. Randall on May 4, 2010).

USEPA (2010) *Evaluation of Energy Conservation Measures for Wastewater Treatment Facilities*. Office of Water. EPA 832-R-10- 005 September 2010.

http://water.epa.gov/scitech/wastetech/upload/Evaluation-of-Energy-Conservation-Measures-for-Wastewater-Treatment-Facilities.pdf

Pumping *prepared 2012* **Technology Summary**

Pump Control Optimization

Objective:

Optimization of pump station operation by selecting the optimum combination of pumps in operation for each flow to maintain peak efficiency for each pump and, as a result, reduce energy use and pump maintenance. This selection is automated using proprietary software.

State of Development:

Innovative. This technology is being used in the U.S. and has been implemented at a US plant in 2008.

Description:

The optimization program utilizes field data such as pump station flows, pump discharge pressures, wet well levels, and pump power usage to select the combination of pumps and pump speed at each flow rate. The software program utilizes two optimization algorithms in tandem (genetic and gradient reduction algorithms) rather than a single algorithm. The vendor reports that this methodology guarantees that the selected pumps and speed combination for each flow regime results in the consumption of less energy compared to any other possible combination. Pump station energy reduction in the range of 17% and 23.5% has been reported at the San Jose/Santa Clara Water Pollution Control Plant.

Comparison to Established Technologies:

This software program allows optimization of combinations of pumps equipped with constant speed and variable speed motors.

Available Cost Information:

Project Cost of $43,768 for a 167 MGD plant (average daily flow) with average annual energy savings of $ 244,858 and a simple payback period of 2.1 month.

Vendor Name(s):

Ekster and Associates Inc.

1904 Lockwood Ave.

Fremont, CA 94539

Telephone: 510-657-7066

Email: info@srtcontrol.com

Installation(s):

San Jose/ Santa Clara Water Pollution Control Plant (SJ/SC WPCP)

700 Los Esteros Rd.,

San Jose, CA 95134

Bhavani Yerrapotu, Deputy Director

Telephone: 408-945-5300

Email: Bhavani.Yerrapotu @sanjoseca.gov

Key Words for Internet Search:

Pump stations, Pumping, Pumps Scheduling, Ekster

Data Sources:

San Jose/ Santa Clara Water Pollution Control Plant

USEPA (2010) *Evaluation of Energy Conservation Measures for Wastewater Treatment Facilities*. Office of Water. EPA 832-R-10- 005 September 2010.

http://water.epa.gov/scitech/wastetech/upload/Evaluation-of-Energy-Conservation-Measures-for-Wastewater-Treatment-Facilities.pdf

Aeration *prepared 2012* **Technology Summary**

Critical Oxygen Point Control

Objective:

Improve aeration efficiency by controlling the optimum delivery of oxygen in the aeration basins. This is done by determining the critical oxygen point of the wastewater under aeration and utilizing this data to change the DO setpoint.

State of Development:

Emerging.

Description:

Critical oxygen point control is a control method based on respirometric measurements. Bacteria respire by diffusion of oxygen across their cell wall. Oxygen diffuses from a high concentration external to the bacterial cell wall to the low concentration internal to the bacterial cell. Diffusion will only take place once the oxygen concentration differential across the cell wall is sufficient to drive the oxygen through it. The minimum concentration at which this occurs is called the critical oxygen point. Below the critical oxygen point, the biodegradation rate will rapidly decrease. At the critical oxygen point, the biodegradation rate will be at a maximum for the available food source (i.e., organic compounds and ammonia in the wastewater being treated). Accurately knowing the critical oxygen point for the active biomass allows the optimal DO setpoint to be determined.

Strathkelvin Instruments (Scotland, UK) has developed a proprietary software upgrade to their Strathtox line of respirometers that, in real time, determines the critical oxygen point of the wastewater under aeration and utilizes this data to change the DO setpoint to control the optimum delivery of oxygen in the aeration basins.

Comparison to Established Technologies:

The vendor claims substantial savings in reducing aeration cycles while increasing utilization of available capacity and reducing energy costs.

Available Cost Information:

Not available.

Vendor Name(s):

Strathkelvin Instruments Limited
Rowantree Avenue
North Lanarkshire
ML1 5RX
Scotland, UK
Telephone: 01698 730400
Fax: 01698 730401
Email: info@strathkelvin.com

Installation(s):

See website which reports on a plant in the UK that reduced plant capacity by 25% resulting in CO_2 and energy reduction while maintaining compliance. http://pdfs.findtheneedle.co.uk/107710-1483.pdf

Key Words for Internet Search:

Aeration efficiency, Critical Oxygen Point, respirometric measurements, optimal DO setpoint

Data Sources:

USEPA (2010) *Evaluation of Energy Conservation Measures for Wastewater Treatment Facilities*. Office of Water. EPA 832-R-10- 005 September 2010.

http://water.epa.gov/scitech/wastetech/upload/Evaluation-of-Energy-Conservation-Measures-for-Wastewater-Treatment-Facilities.pdf

http://www.strathkelvin.com/waste_water/applications.asp

Aeration *prepared 2012* **Technology Summary**

Membrane Air Scour Alternatives

Objective:

Reduce membrane fouling by providing energy efficient air scour fouling control and operational strategies.

State of Development:

Emerging.

Description:

Several membrane manufacturers have modified operational strategies to reduce air scour fouling control requirements (Wallis-Lage and Levesque 2009), particularly for MBR systems.

For example, Kubota varies the volume of air used for aeration based on the flux (e.g., lower air scour rates are used for lower flux values). The manufacturer of the Huber system claims reduced energy consumption for air scour due to a centrally positioned air intake and low pressure. Siemens uses a combination of air and water to scour the membrane (Wallis-Lage and Levesque 2009). General Electric (GE) implemented “cyclic” air scour whereby aeration would turned on and off in 10 second intervals. A newer innovation is their 10/30 Eco-aeration where the membrane is scoured for 10 seconds on, 30 second off during non-peak flow conditions. GE claims that the 10/30 Eco-aeration can reduce energy consumption by up to 50 percent compared to the standard 10/10 aeration protocol (Ginzburg et al. 2008).

Comparison to Established Technologies:

The literature includes pilot- and full-scale test data for a membrane fouling controller and algorithm used to clean the GE ZENON ZeeWeed MBR. The system uses real-time analysis of the membrane’s filtration operating conditions to determine the fouling mechanism present in the MBR system. The information obtained from the algorithm dictates the implementation of specific control actions to respond to the particular fouling mechanism (e.g., membrane aeration, backwash, chemical cleaning – the biggest impact on energy consumption being membrane aeration). When aeration is identified as the control action, the fouling controller/algorithm provides the MBR Programmable Logic Controller (PLC) system the information to select between the traditional 10/10 (air scour On/Off) protocol and a 10/30 Eco Aeration energy saving protocol. The algorithm was piloted and later full-scale tested at a 3 million gallon per day (mgd) plant in Pooler, Georgia (Ginsburg et al. 2008). Ginzburg (2008) concluded that additional research is required to further develop the on-line fouling controller to include additional control parameters such as membrane aeration flow rate, backwash flow rate, and backwash duration.

Available Cost Information:

Information not available.

Vendor Name(s):

Enviroquip (a division of Ovivo, formerly Eimco) - partnership with Kubota Corporation, Japan)
2404 Rutland Drive
Austin, TX 78758
Telephone: 512-834-6000
Fax: 512-834-6039
Email: info@enviroquip.com

HUBER SE
Industriepark Erasbach A1
D-92334 Berching
Germany
Telephone: +49-8462-201-0
Fax: +49-8462-201-810
Email: info@huber.de

Installation(s):

Pilot and full scale testing was conducted at a wastewater treatment plant in Pooler, Georgia. See data reference below.

Aeration *prepared 2012* **Technology Summary**

Membrane Air Scour Alternatives (continued)

ZENON Membrane Solutions (GE)
Oakville, Ontario, Canada
Telephone: 905-465-3030
Email: www.gewater.com

Siemens Industry, Inc.
Water Technologies
Telephone: 866-926-8420 or 724-772-1402
Web: www.water.siemens.com
(select Contact at top of page)

Key Words for Internet Search:

Membrane Air Scour, membrane cleaning, membrane fouling, MBR efficiency

Data Sources:

Wallis-Lage, C.L. and S. D. Levesque. 2009. *Cost Effective & Energy Efficient MBR Systems*. Presented at the Singapore International Water Week. June 22 – 26, 2009. Suntec Singapore International Convention and Exhibition Center.

Ginzburg, B., J. Peeters, and J. Pawloski. 2008. *On-line Fouling Control for Energy Reduction in Membrane Bioreactors*. Presented at Membrane Technology 2008. Atlanta, GA. WEF.

USEPA (2010) *Evaluation of Energy Conservation Measures for Wastewater Treatment Facilities*. Office of Water. EPA 832-R-10- 005 September 2010.

http://water.epa.gov/scitech/wastetech/upload/Evaluation-of-Energy-Conservation-Measures-for-Wastewater-Treatment-Facilities.pdf

Aeration *prepared 2012* **Technology Summary**

Ultra-fine Bubble Diffusers

Objective:

Use of advanced diffuser technology in aerobic biological treatment processes to achieve enhanced energy reduction over fine bubble diffusers.

State of Development:

Emerging.

Description:

Recent advances in membrane materials have led to ultra-fine bubble diffusers, which generate bubbles with an average diameter between 0.2 and 1.0 mm. The primary appeal of ultra-fine bubble diffusion is improved oxygen transfer efficiency (OTE). Additionally, some composite materials used in the manufacture of ultra-fine bubble diffusers are claimed to be more resistant to fouling, which serves to maintain the OTE and reduce the frequency of cleaning. Concerns about ultra-fine bubble diffusion include slow rise rates and the potential for inadequate mixing. *Two proprietary ultra-fine bubble diffuser designs, panel diffusers by Parkson and Aerostrip® diffusers by the Aerostrip Corporation, are discussed below. Messner developed the original ultra-fine bubble diffuser which is marketed in Europe by Trevi Environmental Solutions.*

Comparison to Established Technologies:

Ultra-fine Bubble Diffusers are reported to achieve enhanced energy reduction over fine bubble diffusers. The advantages of panel diffusers include the increased OTE and the even distribution of aeration. Disadvantages can include a higher capital cost, a higher head loss across the diffuser, increased air filtration requirements, and a tendency to tear when over-pressurized.

Panel diffusers by Parkson are membrane type diffusers built onto a rectangular panel. They are designed to cover large areas of the basin floor and lay close to the floor. Panel diffusers are constructed of polyurethane and generate a bubble with a diameter of about one mm.

AeroStrip® is a proprietary diffuser design manufactured in Austria by Aquaconsult. The device is a long strip diffuser with a large aspect ratio. According to the manufacturer, it is a homogenous thermoplastic membrane held in place by a stainless steel plate. The AeroStrip® diffuser provides many of the same advantages and disadvantages as panel diffusers; however, it appears to be less prone to tearing. Also, the smaller strips allow tapering of the diffuser placement to match oxygen demand across the basin. AeroStrips may be mounted at floor level or on supports above the floor.

Manufacturer's claims regarding the strip membrane diffuser include:

- Energy efficiencies between 10 percent and 20 percent greater than the traditional ceramic and elastomeric membrane diffuser configurations.
- Uniform bubble release across the membrane surface.
- Bubbles resist coalescing.
- Membrane not prone to clogging.
- Diffusers are self-cleaning, although Aerostrip panels have been reported to be susceptible to frequent fouling requiring bumping and flexing of the membrane to dislodge.

Available Cost Information:

Not available.

Vendor Name(s):

Parkson Corporation – HiOx Panels

Telephone: 1-888-PARKSON

Fax: 954-974-6182

technology@parkson.com

Installation(s):

Information not available.

Aeration *prepared 2012* **Technology Summary**

Ultra-fine Bubble Diffusers (continued)

Trevi Environmental Solutions - Messner Panels
Dulle-Grietlaan 17/1
9050 Gentbrugge, Belgium
Telephone: +32 9 220 05 77
Email: info@trevi-env.com

AQUACONSULT – Aerostrip Panels
Anlagenbau Ges.m.b.H
Wassergasse 22-26/9
A-2500 Baden
Austria
Telephone: +43-2252 41 481
Fax: +43-2252 41 480
Email: office@aquaconsult.at

Key Words for Internet Search:

Fine bubble diffuser, panel diffuser, strip diffuser, thermoplastic membrane

Data Sources:

http://www.parkson.com/files/Brochures/HiOx_UltraFlex_Aeration_System.pdf

http://www.aquaconsult.at/indexe.php

USEPA (2010) *Evaluation of Energy Conservation Measures for Wastewater Treatment Facilities*. Office of Water. EPA 832-R-10- 005 September 2010.

http://water.epa.gov/scitech/wastetech/upload/Evaluation-of-Energy-Conservation-Measures-for-Wastewater-Treatment-Facilities.pdf

Disinfection *prepared 2012* **Technology Summary**

Automated Channel Routing for UV Disinfection

Objective:

Reduce energy use and extend UV lamp life for UV disinfection systems.

State of Development:

Emerging.

Description:

Automation can reduce the number of lamps and/or channels operating based on real-time flow and wastewater characteristic data. Controls can be designed to turn off lamps or divert flow to a few operating channels depending on the UV system design. Control is most commonly flow-paced control or dose-paced control. Flow-paced is the simplest with number of lamps/channels in service based strictly on influent flow rate. Dose-paced control is based on the calculated dose, which is derived from flow rate, UV transmittance (UVT) and lamp power (including lamp age and on-line intensity output) data (Leong et al. 2008). During periods of high solids removal, UVT will increase and UV output can be decreased to achieve the same dose. During wet weather events or other periods of low effluent quality, lamp output can be increased in response to reduced UVT.

Comparison to Established Technologies:

At the University of California, Davis Wastewater Treatment Plant, process controls were implemented to divert flow automatically to one of two channels during low flow conditions (Phillips and Fan 2005). This change provided the flexibility to operate at 33, 50, 67 and 100 percent of maximum power. The original design limited operation to 67 and 100 percent of maximum power. The annual energy use at the UC Davis WWTP is expected to decrease by 25 percent once the process changes are fully implemented in the fall of 2010.

Available Cost Information:

Information not available.

Vendor Name(s):

Information not available.

Installation(s):

University of California, Davis Wastewater Treatment Plant

Mike Fan, Superintendent Waste Water Treatment and Solid Waste

Telephone: 530-752-7553

Email: mmfan@ucdavis.edu

Key Words for Internet Search:

UV disinfection, automated channel routing, energy efficient UV control.

Data Sources:

Leong, L.Y.C., J. Kuo, and C Tang. 2008. *Disinfection of Wastewater Effluent— Comparison of Alternative Technologies*. Water Environment Research Foundation (WERF), Alexandria, VA.

Phillips, D. L. and M. M. Fan. 2005. *Automated Channel Routing to Reduce Energy Use in Wastewater UV Disinfection Systems*. University of California, Davis. Davis, California.

USEPA (2010) *Evaluation of Energy Conservation Measures for Wastewater Treatment Facilities*. Office of Water. EPA 832-R-10- 005 September 2010.

http://water.epa.gov/scitech/wastetech/upload/Evaluation-of-Energy-Conservation-Measures-for-Wastewater-Treatment-Facilities.pdf

Disinfection *prepared 2012* **Technology Summary**

Low Pressure High Output Lamps for UV Disinfection

Objective:

Reduce energy consumption for UV disinfection by replacing medium pressure lamps with low pressure low output lamps.

State of Development:

Emerging.

Description:

Low-pressure high-output lamps are similar to low-pressure low-intensity lamps except that a mercury amalgam is used instead of mercury gas.

Comparison to Established Technologies:

In some cases, WWTPs can save on energy costs by specifying low-pressure low intensity lamps. The power draw can be significantly lower than medium-pressure lamps. Tradeoffs are (1) a larger footprint for the same disinfection level, which can be significant because as many as 20 low-pressure low-intensity lamps are needed to produce the same disinfecting power as one medium-pressure lamp, and (2) higher operating costs for maintenance and change out of additional lamps.

Leong et al. (2008) reported that the energy demand for low-pressure high-output systems is similar to that of low-pressure low-intensity systems. Thus, low-pressure high-output lamps may be a good option for reducing the number of lamps and footprint while keeping the energy requirements low. Salveson et al. (2009) presented results of a pilot test at the Stockton, CA WWTP comparing design conditions and operation of medium pressure and low-pressure high-output lamps. The power draw for the low-pressure high-output lamps was between 20 and 30 percent of the power draw for the medium pressure lamps, reducing annual O&M costs significantly. These results are similar to information reported from one manufacturer for a 30 mgd plant treating secondary effluent.

Available Cost Information:

Information not available.

Vendor Name(s):

Calgon Carbon Corporation

P.O. Box 717

Pittsburgh, PA 15230

Telephone: 800-4CARBON or 412-787-6700

Fax: 412-787-6676

info@calgoncarbon-us.com

Installation(s):

Results of a pilot test at the Stockton, CA WWTP were reported in the report referenced below by Salveson et al. (2009).

Key Words for Internet Search:

UV disinfection, low-pressure low intensity lamps, low-pressure high-output lamps.

Data Sources:

Salveson, A., T. Wade, K. Bircher, and B. Sotirakos. 2009. *High Energy Efficiency and Small Footprint with High-Wattage Low Pressure UV Disinfection for Water Reuse*. Presented at the International Ultraviolet Association (IUVA)/ International Ozone Association (IOA) North American Conference. May 5, 2009. Boston, MA.

Leong, L.Y.C., J. Kuo, and C Tang. 2008. *Disinfection of Wastewater Effluent— Comparison of Alternative Technologies*. Water Environment Research Foundation (WERF), Alexandria, VA.

USEPA (2010) *Evaluation of Energy Conservation Measures for Wastewater Treatment Facilities*. Office of Water. EPA 832-R-10-005 September 2010.

http://water.epa.gov/scitech/wastetech/upload/Evaluation-of-Energy-Conservation-Measures-for-Wastewater-Treatment-Facilities.pdf

Other Processes *prepared 2012* **Technology Summary**

Solar Drying of Sewage Sludge

Objective:

Use of solar heat to evaporate residual water from sludge, reduce thermal energy requirements and sludge utilization/disposal costs.

State of Development:

Emerging.

Description:

Thermal drying is the use of heat to evaporate residual water from sludge. It typically follows dewatering and can increase the dry solids content from between 18 and 30 percent to more than 90 percent (WEF 2009). The thermal drying process reduces the mass and volume of dewatered solids and results in a product with a high nutrient and organic content that can be used as a low-grade fertilizer. WEF and ASCE (2010) report on growing use in Europe and the United States of an emerging ECM for thermal drying called solar drying. First developed by researchers in Germany, solar drying uses solar energy and convective air drying methods to produce solids containing no more than 10 percent moisture. Solar dryers consist of a wide concrete pad with low walls enclosed in a “greenhouse” type structure. Sludge is pumped onto the pad and arranged in a relatively thin layer or in windrows. A microprocessor monitors temperature and humidity and adjusts fans and louvers to provide sufficient ventilation for drying. Auxiliary heat may be used to enhance drying performance.

Comparison to Established Technologies:

The Parkson Corporation reports that approximately 95 percent of energy used for drying is provided by solar panels. They cite 100 installations in a variety of climates and for WWTP sizes ranging from 0.2 to 40 mgd. Solar drying is considered an emerging ECM because of its capacity to significantly reduce fuel requirements compared to conventional dryers. Disadvantages of the technology are its large footprint, the need for sufficient days with adequate solar heating, and potential for odor problems. If odors are present, appropriate control technologies is available and can be provided.

Available Cost Information:

Information not available.

Vendor Name(s):

Parkson Corporation

Telephone: 1-888-PARKSON

Fax: 954-974-6182

technology@parkson.com

Installation(s):

As of 2008, WEF and ASCE (2010) report that 10 solar drying facilities are being built or operated in the U.S., mainly at small plants.

Key Words for Internet Search:

Solar drying, sludge drying, thermal drying

Data Sources:

WEF. 2009. MOP No. 32: *Energy Conservation in Water and Wastewater Facilities*. Prepared by the Energy Conservation in Water and Wastewater Treatment Facilities Task Force of the Water Environment Federation. McGraw Hill, New York.

WEF and ASCE. 2010. *Design of Municipal Wastewater Treatment Plants – WEF Manual of Practice 8 and ASCE Manuals and Reports on Engineering Practice No. 76, 5th Ed*. Water Environment Federation, Alexandria, VA, and American Society of Civil Engineers Environment & Water Resources Institute, Reston, Va.

USEPA (2010) *Evaluation of Energy Conservation Measures for Wastewater Treatment Facilities*. Office of Water. EPA 832-R-10- 005 September 2010.

http://water.epa.gov/scitech/wastetech/upload/Evaluation-of-Energy-Conservation-Measures-for-Wastewater-Treatment-Facilities.pdf

6.3 Chapter References

Gass, J.V. (2009) *Scoping the Energy Savings Opportunities in Municipal Wastewater Treatment*. Presented at the Consortium for Energy Efficiency Partner's Meeting, September 2009.

Gidugu, S., S. Oton, and K. Ramalingam. 2010. Thorough Mixing Versus Energy Consumption. New England Water Environment Association Journal, Spring 2010.

Ginzburg, B., J. Peeters, and J. Pawloski. 2008. *On-line Fouling Control for Energy Reduction in Membrane Bioreactors*. Presented at Membrane Technology 2008. Atlanta, GA. WEF.

Gray & Osborne, Inc. 2008. Wastewater Treatment Plant Capacity Study and Engineering Report. March, 2008.

Jones, T., Burgess, J. (2009) *Municipal Water-Wastewater Breakout Session: High Speed Turbo Blowers*. Presented at the Consortium for Energy Efficiency Program Meeting, June 3, 2009.

Lemma, I., Steve Colby, Herrington, T., Pulse Aeration of Secondary Aeration Tanks Holds Energy Saving Potential without Compromising Effluent Quality Proceedings of 82nd WEFTEC, Conference and Exposition, Orlando, 2009.

Leong, L.Y.C., J. Kuo, and C Tang. 2008. *Disinfection of Wastewater Effluent— Comparison of Alternative Technologies*. Water Environment Research Foundation (WERF), Alexandria, VA.

Moise, M., Ekster, A., Operation of a Solids Contact Tank at Low Dissolved Oxygen and Low Total Suspended Solids Concentrations, Proceedings of WEFTEC, Conference and Exposition, San Diego, 2007.

Randall, C.W. and W. O. Randall. 2010. Comparative Analysis of a Biomix System and a Submersible Propeller Mixer: Mixing in Anaerobic Zones at the F. Wayne Hill Water Resources Center, Buford, Georgia. (Report provided in an e-mail from Clifford W. Randall on May 4, 2010).

Salveson, A., T. Wade, K. Bircher, and B. Sotirakos. 2009. *High Energy Efficiency and Small Footprint with High-Wattage Low Pressure UV Disinfection for Water Reuse*. Presented at the International Ultraviolet Association (IUVA)/ International Ozone Association (IOA) North American Conference. May 5, 2009. Boston, MA.

USEPA (2010) *Evaluation of Energy Conservation Measures for Wastewater Treatment Facilities*. Office of Water. EPA 832-R-10-005 September 2010.

Water Environment Federation Manual *of Practice (MOP) No. 32: Energy Conservation in Water and Wastewater Facilities*. Prepared by the Water and WastewaterTreatment FacilitiesTask Force of the Water Environment Federation. McGraw Hill, New York, 2009.

Wallis-Lage, C.L. and S. D. Levesque. 2009. *Cost Effective & Energy Efficient MBR Systems*. Presented at the Singapore International Water Week. June 22 – 26, 2009. Suntec Singapore International Convention and Exhibition Center.

WEF and ASCE. 2010. *Design of Municipal Wastewater Treatment Plants – WEF Manual of Practice 8 and ASCE Manuals and Reports on Engineering Practice No. 76, 5th Ed.* Water Environment Federation, Alexandria, VA, and American Society of Civil Engineers Environment & Water Resources Institute, Reston, Va.

Chapter 7

Research Needs

7.1 Introduction

Science and research are critical to advancing EPA's mission to protect human health and the environment. This chapter focuses on the relevant research needs in the areas of specific technologies that may have a significant impact on wastewater treatment and wet weather flow management, such as achieving higher levels of pollutant removal while minimizing operation and maintenance costs of the treatment system, thereby improving the contributions of the industry to sustainability.

Sustainability is based on a simple principle: Everything that we need for our survival and well-being depends, either directly or indirectly, on our natural environment. The goal of sustainability is to create and maintain the conditions under which humans and nature can coexist in productive harmony, for both present and future generations. Setting a goal of sustainability is important to achieve having, and continuing to have, the water, materials, and resources, to protect human health and our environment.**

This chapter looks into some of the important technology areas and discusses associated research needs of interest in the wastewater treatment industry.

7.2 Research Needs

The application of new concepts and technologies to enhance the long-term sustainability of wastewater management can be expedited by promoting research needed to develop and demonstrate these concepts and technologies.

At this time, research and technical issues can be grouped into the following areas: (1) upgrading older WWTPs; (2) nutrient removal and recovery (or, "the recovery of resources including energy and nutrients"); (3) removal of other contaminants; (4) security of water systems; (5) energy conservation and renewable energy sources; and (6) wastewater and solids treatment optimization.

7.2.1 Upgrading WWTPs

Most of the treatment plants in the United States were constructed more than two decades ago. Many of these treatment facilities need to be upgraded to improve capacity and treatment efficiency. The upgraded treatment processes that can best fit the existing technologies at Publicly Owned Treatment Works (POTWs) are chosen based upon wastewater discharge (NPDES) permit requirements and their cost-effectiveness to achieve water quality objectives and protect public health. Such upgrades are often opportunities to employ emerging technologies or established technologies in newer and better ways.

Some of the areas of current and future interest are as follows:

- Innovative wastewater collection system designs that provide real-time condition assessment data for asset management decision-making.
- Determination of the long-term performance and life-cycle cost effectiveness of emerging system rehabilitation techniques, including new and existing materials.
- Advanced sewer system designs that minimize energy consumption and greenhouse gas emissions.

7.2.2 Removal of Nutrients (or, "Recovery of Resources including Energy and Nutrients")

Nutrients in wastewater effluent can stimulate excessive algae growth, and ammonia is toxic to aquatic life. Increasingly more stringent nutrient discharge limits are prompting research into technologies that are capable of improved nutrient removal.

'Low energy alternatives to activated sludge' could also be considered a category or subsection that is an important research objective of this chapter. Some of the processes relevant to resource recovery could be listed under such a subsection as areas in which research could be beneficial, including Anaerobic MBR, Mainstream Deammonification, MBfR improved aeration, AnMBR, microbial fuel cells, and enhanced anaerobic processes. Fact sheets for these technologies are found in other chapters in this document.

Some of the areas of current and future research interest are as follows:

- Advanced sustainable nutrient removal technologies capable of reducing nutrients to concentrations below current limit of technology while minimizing the costs, energy consumption and chemical consumption. Optimization of anaerobic wastewater treatment processes (including nutrient removal) for improved performance, particularly in cold climates.
- Continued development of full-scale anaerobic MBRs to reliably meet secondary and advanced treatment requirements under various operating conditions and climates and to meet stringent reclaimed water standards with subsequent disinfection.
- Optimized nitritation-denitritation and evaluating operating conditions and/or improved processes to promote nitrite oxidizing bacteria (NOB) suppression and washout.
- Application of deammonification and nitritation/denitritation processes (currently used for high temperature sidestreams) to treat low temperature mainstream flows.
- Use of MBfR technology to improve energy efficiency of aerobic processes or to provide hydrogen as an alternative electron acceptor for denitrification or oxidation of other reduced contaminants.
- Improved understanding of the active fraction of denitrifier performance and kinetics leading to improved design and operation.
- Improved understanding of the portion of organic nitrogen in the final effluent produced within a wastewater treatment plant (WWTP) and development of new processes or improved operational control strategies to minimize its production (i.e., non-reactive nitrogen in the plant that could theoretically become reactive when discharged).

- Improve analytical methods for measuring very low levels of phosphorus.
- Improved understanding of performance and operational factors for full plant flow deammonification. Refinement of key process parameters leading to development of effective process designs and development of an optimized operational strategy.
- Innovative technologies for resource recovery (Nutrients, Carbon, H_2O) from wastewater including recovery at source (grey water, black water, urine diversion), and enhanced anaerobic digestion and other solids conversion processes.

7.2.3 Removal of Other Contaminants

Compounds that can alter the endocrine system of animals are known as Endocrine Disrupting Compounds (EDCs) and have been linked to a variety of adverse effects in both humans and wildlife. Pharmaceutical compounds and their metabolites have been detected as Pharmaceutically Active Compounds (PhACs). Some PhACs are highly persistent and can function as EDCs.

- Evaluate new technologies for cost-effective removal of EDCs, PhACs, PBDEs, Prions, PPCPs, etc.
- Improved and sustainable disinfection technologies for control of pathogens of concern (*Cryptosporidium, Giardia, e-Coli*-0157, etc.) and other bacteria, viruses and protozoa without disinfection byproduct issues.
- Innovative technologies or existing technology upgrades to remove emerging contaminants with minimal costs and energy footprint.
- Alternative approaches to prevent or lessen the quantity of EDCs, PhACs, PBDEs, Prions, PPCPs, etc., introduced into wastewater.

7.2.4 Security of Water Systems

While research for security of wastewater systems has been completed within the last decade, continuing needs include the following:

- Emergency preparedness of WWTPs to deal with pandemics, new strains of viruses and bacteria, or spill incidents.
- Mitigation strategies for treatment plants after natural calamities.
- Prevention and preparedness for bioterrorism.

7.2.5 Energy Conservation and Renewable Energy Sources

As the cost of energy rises, many wastewater facilities are searching for more energy efficient technologies, processes, and operating techniques. In addition, in their effort to become energy self-sufficient, many wastewater facilities are looking for cost effective renewable energy sources.

- Enhanced production of digester gas.
- Effective use of digester gas for the onsite generation of heat and electric power.

- Cost effective renewable energy source, including, fuel cells, solar cells, wind turbines, hydropower, and heat extraction from wastewater.
- Use of biosolids for producing biofuels (pyrolysis, gasification, etc.)
- Export of clean biogas for offsite commercial uses.

7.2.6 Wastewater and Solids Treatment Optimization

Optimizing the way facilities treat both wastewater and solids can result in cost savings in energy, maintenance, manpower, and other plant operating costs.

- Develop strategies, methods, processes, and tools for cost effective management of energy used in wastewater treatment.
- Develop cost effective methods to minimize the volume and quantity of wastewater treatment solids generation, without sacrificing produce value or quality.
- Identify new resource recovery opportunities for wastewater and biosolids, including heat extraction, nutrient mining and recovery (ammonia, nitrogen, phosphate, etc.), and wastewater and biosolids reuse.

7.3 Chapter References

**USEPA, Sustainability Web page, accessed November 2012.

Institute of Environment and Resources – Wastewater Technology University of Denmark; web site: http://www.er.dtu.dk/English/

Water Environment Research Foundation (WERF), 2002; web site: www.werf.org/funding/researchplan.cfm

Water Environment Research Foundation (WERF), 2012; 11/29/2012 email from Lauren Filmore, WERF, to James Wheeler, EPA.

Parker, D.S., “Introduction of New Process Technology into the Wastewater Treatment Sector,” WEFTEC 2010.

Daigger, G.T., “New Approaches and Technologies for Wastewater Management,” The Bridge, National Academy of Engineering, Volume 38, Number 3, Fall 2008.

Appendix
A

Trade Associations

A.1 Introduction

This chapter lists professional and trade associations that may have significant information. These professional and trade associations may provide relevant research assistance on wastewater treatment and in-plant wet weather management technologies within their respective areas of expertise.

A.2 Trade Associations

American Society of Civil Engineers (ASCE)
1801 Alexander Bell Drive Reston, VA 20191-4400
Telephone: 800-548-2723
Web site: http://www.asce.org

National Association of Clean Water Agencies (NACWA)
1816 Jefferson Place, NW, Washington D.C. 20036
Telephone: 202-833-2672
Web site: http://www.nacwa.org/

Water and Wastewater Equipment Manufacturers Association (WWEMA)
P.O. Box 17402, Washington, D.C. 20041
Telephone: 703-444-1777
Web site: http://www.wwema.org

Water Environment Federation (WEF)
601 Wythe Street, Alexandria, VA 22314-1994
Telephone: 800-666-0206
Web site: http://www.wef.org

Water Environment Research Foundation (WERF)
635 Slaters Lane, Suite G-110, Alexandria, VA 22314
Telephone: 571-384-2100
Web site: http://www.werf.org

This page intentionally blank

Appendix
B

List of Acronyms and Abbreviations

Acronym/Abbreviation	Definition
A/O	Anaerobic/Oxic (Phoredox)
A2/O	Anaerobic/Anoxic/Oxic
AACE	American Association of Cost Engineers International
ABW®	Automatic Backwash Filters
AEBR	Anaerobic Expanded Bed Reactor
AGAR®	Attached Growth Airlift Reactor
AGRS	Advanced Grit Removal System
AGSP	Aerobic Granular Sludge Process
AIZ	Air Intercept Zone
AMBR®	Anaerobic Migrating Blanket Reactor
ANFLOW	Anaerobic Fluidized Bed Reactor
AN-MBR	Anaerobic Membrane BioReactor
AOB	Ammonia oxidizing bacteria
AOP	Advanced Oxidation Process
ASBR®	Anaerobic Sequencing Batch Reactor
ASCE	American Society of Civil Engineers
AT3	Aeration Tank 3
atm	Atmosphere
AWTP	Advanced Wastewater Treatment Plant
AWWA	American Water Works Association
BABE	Bio-Augmentation Batch Enhanced
BAF	Biological Aerated Filters
BAR	Bio Augmentation Regeneration and/or Reaeration
BCDMH	1-Bromo-3 Chloro-5,5 DiMethylHydantoin
BCFS	Biological-Chemical Phosphorus and Nitrogen Removal

Acronym/Abbreviation	Definition
BHRC	Ballasted High Rate Clarification
BioMEMS	Biological Micro-Electro Mechanical Systems
BIOS	Bioprocess Intelligent Optimization System
BNR	Biological Nutrient Removal
BOD	Biological/Biochemical Oxygen Demand
BOD/N	Biochemical Oxygen Demand Ratio to Nitrogen
BOD/P	Biochemical Oxygen Demand Ratio to Phosphorus
BOD5	Biological oxygen demand after 5 days
CANON	Completely autotrophic nitrogen removal over nitrite
CASS™	Cyclic Activated Sludge System
CCAS™	CounterCurrent Aeration System
CDS	Continuous Deflection Separator
cfm	Cubic feet per minute
Cfu	Colony forming unit
CMAS	Complete Mix-Activated Sludge
CMF®	Compressed Media Filter (WWETCO CMF®)
CMOM	Capacity, Management, Operations, and Maintenance
COD	Chemical Oxygen Demand
CSO	Combined Sewer Overflow
CSS	Combined Sewer System
CWA	Clean Water Act
DAF	Dissolved Air Flotation
DEMON	DEamMONification
DEPHANOX	DE-nitrification and PHosphate accumulation in ANOXic
DF	Disc Filter
DO	Dissolved Oxygen
EBPR	Enhanced Biological Phosphorus Removal
ECM	Energy conservation measure
EDC	Endocrine Disrupting Compound
ELISA	Enzyme-Linked ImmunoSorbent Assay
EMS	Environmental Management Systems
FBBR	Fluidized Bed BioReactor

Acronym/Abbreviation	Definition
FISH	Fluorescence In Situ Hybridization
FP	Focused pulse
GAC	Granular-Activated Carbon
GPD	Gallons per day
gpm/ft^2	Gallons per minute per square foot
GST	Gravity sludge thickener
HANAA	Handheld Advanced Nucleic Acid Analyzer
HFMBfR	Hydrogen-based hollow-Fiber Membrane Biofilm Reactor
HFO	Hydrous Ferric Oxide
HLR	Hydraulic loading rate
HPO	High-Purity Oxygen
HRC	High-Rate Clarification
HRT	Hydraulic Retention Time
ICAAS	Immobilized Cell-Augmented Activated Sludge
ICEAS™	Intermittent Cycle Extended Aeration System
IFAS	Integrated Fixed-film Activated Sludge
IIT	Illinois Institute of Technology
ISE	Ion Selective Electrode
IUVA	International Ultraviolet Association
IWA	International Water Association
LOT	Limit Of Technology
MAB	Multi-stage Activated Biological
MABR	Membrane-Activated BioReactor
MAUREEN	Main-stream AUtotrophic Recycle Enabling Enhanced N-removal
MBBR	Moving Bed Bio Reactor
MBfR	Membrane biofilm reactor
MBR	Membrane BioReactor
MFC	Microbial Fuel Cell
mg/L	Milligram per Liter
MGD	Million Gallons per Day
MISS	Moderate Isotope Separation System
MLE	Modified Ludzack-Ettinger

Acronym/Abbreviation	Definition
MLSS	Mixed Liquor Suspended Solids
MOV	Most open valve
mph	Miles per hour
MSABP™	Multi-Stage Activated Biological Process
MUCT	Modified University of Cape Town
NACWA	National Association of Clean Water Agencies
NADH	Nicotinamide Adenine Dinucleotide
NF	NanoFiltration
NOB	Nitrite Oxidizing Bacteria
ntu	Nephelometric turbidity unit
O&M	Operation and Maintenance
ORP	Oxidation Reduction Potential
OTE	Oxygen transfer efficiency
OWM	Office of Wastewater Management (U.S. EPA)
PAA	Peracetic acid
PAC	Powdered Activated Carbon
PAO	Phosphorus Accumulating Organisms
PBDE	PolyBrominated Diphenyl Ether
PCE	Perchloroethylene
PCR	Polymerase Chain Reaction
PeCOD™	Photo-electro Chemical Oxygen Demand
PhACs	Pharmaceutically Active Compounds
PLC	Programmable logic controller
POTW	Publicly Owned Treatment Works
PPCP	Pharmaceutical and Personal Care Products
ppm	Parts per million
psig	Pounds per square inch (gauge)
PVC	PolyVinyl Chloride
qPCR	Quantitative PCR
RAS	Returned Activated Sludge
RBC	Rotating Biological Contactor
R-DN	Regeneration DeNitrification

Acronym/Abbreviation	Definition
rDON	Refractory Dissolved Organic Nitrogen
RO	Reverse osmosis
rRNA	Ribosomal ribonucleic acid
SBR	Sequencing Batch Reactor
SCFM	Standard Cubic Feet per Minute
SHARON	Single reactor High-activity Ammonia Removal Over Nitrite
SHARON – ANAMMOX	Single reactor High-activity Ammonia Removal Over Nitrite – ANaerobic AMMonia OXidation
SNdN	Simultaneous Nitrification deNitrification
SRBC	Submerged Rotating Biological Contactor
SRT	Sludge Retention Time; Solids Retention Time
SSO	Sanitary Sewer Overflow
STRASS	Similar to SHARON named after Strass, Austria
SVI	Sludge Volume Index
TDH	Total Dynamic Head
TDS	Total Dissolved Solids
TF	Trickling Filter
TF/PAS	Trickling Filter and Pushed Activated Sludge
TF/SC	Trickling Filter and Solid Contactor
TMP	Trans Membrane Pressure
TOC	Total Organic Carbon
TSS	Total Suspended Solids
U.S. EPA	United States Environmental Protection Agency
UASB	Upflow Anaerobic Sludge Blanket
UCT	University of Cape Town
UV	UltraViolet
UVT	UV transmittance
VFD	Variable frequency drive
VIP	Virginia Initiative Plant
VIS	Visibility
VMI	Virginia Military Institute
VRM®	Vacuum Rotation Membrane

Acronym/Abbreviation	Definition
WAS	Waste Activated Sludge
WASA	Water and Sewer Authority
WEF	Water Environment Federation
WEFTEC	Water Environment Federation's Annual Technical Exhibition and Conference
WERF	Water Environment Research Foundation
WPAP	Water Pollution Abatement Program
WPCF	Water Pollution Control Facility
WRF	Water Reuse Facility
WWEMA	Water and Wastewater Equipment Manufacturers Association
WWPF	WasteWater Production Flow
WWTF	WasteWater Treatment Facility
WWTP	WasteWater Treatment Plant