DEVELOPMENT DOCUMENT

for

EFFLUENT LIMITATIONS GUIDELINES

and

NEW SOURCE PERFORMANCE STANDARDS

for the

TIRE AND SYNTHETIC SEGMENT OF THE RUBBER PROCESSING POINT SOURCE CATEGORY

Russell E. Train
Administrator

Roger Strelow
Acting Assistant Administrator for Air & Water Programs

Allen Cywin
Director, Effluent Guidelines Division

John E. Riley
Project Officer

February 1974

Effluent Guidelines Division
Office of Air and Water Programs
U.S. Environmental Protection Agency
Washington, D.C. 20460

For sale by the Superintendent of Documents, U.S. Government Printing Office, Washington, D.C. 20402 - Price $2.25

ABSTRACT

This document presents the findings of a study of the tire and inner tube and synthetic rubber segments of the rubber processing industry by Roy F. Weston, Inc. for the Environmental Protection Agency, for the purpose of developing effluent limitation guidelines, Federal standards of performance, and pretreatment standards for the industry, to implement Sections 304, 306, and 307 of the Federal Water Pollution Control Act, as amended (33 USC 1251, 1314, and 1316; 86 Stat 816).

Effluent limitation guidelines contained herein set forth the degree of effluent reduction attainable through the application of the best practicable control technology currently available and the degree of effluent reduction attainable through the application of the best available technology economically achievable, which must be achieved by existing point sources by July 1, 1977 and July 1, 1983, respectively. The Standards of Performance for new sources contained herein set forth the degree of effluent reduction which is achievable through the application of the best available demonstrated control technology, processes, operating methods, or other alternatives.

The development of data and recommendations in the document relate to the tire and inner tube and synthetic rubber segments of the rubber processing industry. These two segments are further divided into four subcategories on the basis of the characteristics of the manufacturing processes involved. Separate effluent limitations were developed for each category on the basis of the level of raw waste load as well as on the degree of treatment achievable by suggested model systems. These systems include both biological and physical/ chemical treatment, and for the synthetic rubber subcategories treatment of the secondary effluent by carbon adsorption.

Supportive data and the rationale for development of the proposed effluent limitation guidelines and standards of performance are contained in this document.

CONTENTS

Section		Page
	ABSTRACT	iii
	CONTENTS	v
	FIGURES	ix
	TABLES	xi-xii
I	CONCLUSIONS	1
II	RECOMMENDATIONS	5
III	INTRODUCTION	7
	Purpose and Authority	7
	Summary of Methods Used for Development of the Effluent Limitation Guidelines and Standards of Performance	8
	General Description of the Industry	9
	Tire and Inner Tube Industry	10
	Tire Manufacture	10
	Inner Tube Manufacture	20
	Synthetic Rubber Industry	22
	General	22
	Synthetic Rubber Production	26
	Emulsion Crumb Production	26
	Solution Crumb Production	31
	Latex Production	35
	Summary	39
IV	INDUSTRY CATEGORIZATION	41
	Introduction	41
	Tire and Inner Tube Industry	41
	Synthetic Rubber Industry	45
V	WASTE CHARACTERIZATION	51
	Tire and Inner Tube Industry	51
	Synthetic Rubber Industry	56
	General	56
	Emulsion Crumb Rubber Subcategory	56
	Solution Crumb Rubber Subcategory	60
	Latex Rubber Subcategory	62

		Page
VI	SELECTION OF POLLUTION PARAMETERS	65
	Tire and Inner Tube Industry	65
	Synthetic Rubber Industry	73
VII	CONTROL AND TREATMENT TECHNOLOGY	83
	Survey of Selected Plants	83
	General Approach and Summary	83
	Tire and Inner Tube Plants	83
	Synthetic Rubber Plants	95
	Summary of Control and Treatment Technology	111
	Tires and Inner Tubes	111
	In-Plant Control	111
	End-of-Pipe Treatment	114
	Synthetic Rubber	115
	In-Plant Control	115
	End-of-Pipe Treatment	117
VIII	COST, ENERGY AND NON-WATER QUALITY ASPECTS	121
	Tire and Inner Tube Industry	121
	Synthetic Rubber Industry	128
	Emulson Crumb Subcategory	128
	Solution Crumb Subcategory	134
	Latex Subcategory	138
	Detailed Cost Infomration for All Subcategories	136
IX	BEST PRACTICABLE CONTROL TECHNOLOGY CURRENTLY AVAILABLE-EFFLUENT LIMITATIONS	157
	Tire and Inner Tube Facilities	157
	Identification of Best Practicable Control Technology Currently Available	157
	Effluent Loadings Attainable With Proposed Technologies	159
	Synthetic Rubber Industry	161
	Identification of Best Practic Control Technology Currently Available	161
	Emulsion Crumb Subcategory	161
	Solution Crumb Subcategory	162
	Latex Subcategory	163
	Effluent Loadings Attainable With Proposed Technologies	163
	Emulsion Crumb Subcategory	163
	Solution Crumb Subcategory	164
	Latex Subcategory	166

		Page
X	BEST AVAILABLE TECHNOLOGY ECONOMICALLY ACHIEVABLE--EFFLUENT LIMITATIONS	171
	Tire and Inner Tube Industry	171
	Synthetic Rubber Industry	171
	Identification of Best Available Technology Economically Achievable	171
	Emulsion Crumb Subcategory	171
	Solution Crumb Subcategory	173
	Latex Subcategory	173
	Effluent Loading Attainable with Proposed Technologies	173
	Emulsion Crumb Subcategory	174
	Solution Crumb Subcategory	174
	Latex Subcategory	175
XI	NEW SOURCE PERFORMANCE STANDARDS	177
	Tire and Inner Tube Industry	177
	Synthetic Rubber Industry	177
	Pretreatment Recommendations	177
	Tire and Inner Tube Industry	177
	Synthetic Rubber Industry	178
XII	ACKNOWLEDGEMENTS	179
XIII	REFERENCES	181
XIV	GLOSSARY	185
XV	METRIC UNITS AND CONVERSION FACTORS	193

FIGURES

Figure	Title	Page
1	Flow Diagram for Typical Tire and Camelback Production Facility	14
2	Flow Diagram for a Typical Inner Tube Production Facility	21
3	General Water Flow Diagram for an Emulsion Polymerized Crumb Rubber Production Facility	28
4	General Water Flow Diagram for a Solution Polymerized Crumb Rubber Production Facility	33
5	General Water Flow Diagram for an Emulsion Latex Rubber Production Facility	38
6	Location of Tire Manufacturing Plants, Production Greater than 20,000 Units/Day, and Synthetic Rubber Production Plants, Production Greater than 60,000 Long Tons/Day, Within the U.S., 1972	48
7	Plant J: Chemical Coagulation and Clarification Plus Sludge Handling System Followed by Bio-Oxidation Treatment	98
8	Plant K: Air Flotation and Bio-Oxidation Wastewater Treatment Facility	101
9	Plant N: Activated Sludge Waste Water Treatment Facility	107
10	Hypothetical Waste Water Segregation and Treatment Facility for Tire and Inner Tube Plants	125
11	Hypothetical End-of-Pipe Secondary Waste Water Treatment Facility for Synthetic Rubber Plants	130
12	Hypothetical End-of-Pipe Advanced Waste Water Treatment Facility for All Sub-categories of Synthetic Rubber Plants	131

TABLES

Table	Title	Page
1	U.S. Tire and Inner Tube Production from 1967-1971	12
2	Summary of Potential Process-Associated Waste Water Sources from the Tire and Inner Tube Industry	19
3	U.S. Synthetic Rubber Production by Type for 1967-1971 and the Projected Growth Rate to 1980	23
4	Families of Synthetic Rubbers Included in SIC 2822, Polymerization Processes, and Annual U.S. Production (1972)	25
5	Summary of Potential Process-Associated Waste Water Sources from Crumb-Rubber Production via Emulsion Polymerization Processing	32
6	Summary of Potential Process-Associated Waste Water Sources from Crumb-Rubber Production via Solution Polymerization Processing	36
7	Summary of Potential Process-Associated Waste Water Sources from Latex Production via Emulsion Polymerization Processing	40
8	Major Tire Production Facilities in the United States	43
9	Raw Waste Loads of Untreated Effluent from Tire and Inner Tube Facilities	52
10	Average Values of Raw Waste Loads from Tire Industry	54
11	Raw Waste Loads of Process Waste Waters from Tire and Inner Tube Facilities	55
12	Raw Waste Loads for Emulsion Crumb Rubber Plants	57
13	Raw Waste Loads of the Principal Individual Waste Water Streams in an Emulsion Crumb Rubber Plant	59

		Page
14	Raw Waste Loads for Solution Crumb Rubber Plants	61
15	Raw Waste Loads for Latex Rubber Plants	63
16	Waste Water Control and Treatment Technologies at Exemplary Tire and Inner Tube Plants	84
17	Waste Water Control and Treatment Technologies at Exemplary Synthetic Rubber Plants	85
18	Older Tire and Inner Tube Production Facility	123
19	Newer Tire Production Facility	124
20	Estimated Waste Water Treatment Costs - Emulsion Crumb Rubber	133
21	Estimated Waste Water Treatment Costs - Solution Crumb Rubber	135
22	Estimated Waste Water Treatment Costs - Latex Rubber	137
23-39	Support Cost Information	140-156
40	Raw Waste Load and Final Effluent from Tire and Inner Tube Facilities	160
41	Raw Waste Load and Final Effluent from Emulsion Crumb Plants	165
42	Raw Waste Load and Final Effluent from Solution Crumb Plants	167
43	Raw Waste Load and Final Effluent from Latex Rubber Plants	169
44	Conversion Factors	193

SECTION I

CONCLUSIONS

Two major and distinct segments exist within the rubber processing industry: 1) the tire and inner tube industry; 2) the synthetic rubber industry.

For the purpose of establishing limitations, tire and inner tube plants, regardless of age and cost to implement control procedures, have been placed in one subcategory. Factors such as the manufacturing process, final product, raw materials, plant size, geographic location, air pollution equipment, and the nature and treatability of waste waters are similar and substantiate the subcategorization of the tire and inner tube plants as one subcategory.

Process waste waters for the tire and inner tube industry include discharges of solutions used in the manufacturing process, washdown of processing areas, run-off from raw material storage areas, and spills and leakage of cooling water, steam, processing solutions, organic solvents and lubricating oils. Primary pollutants in these waste waters are oil and grease, suspended solids, and acidity and alkalinity (pH).

In the tire and inner tube industry, the emphasis of present environmental quality control and treatment technologies is placed on the control of particulate emission and the reduction of pollutants in nonprocess waste waters. Control and treatment of many process wastewaters has been given secondary priority. As a result, no adequate overall control and treatment technology is employed by plants within the industry. A treatment system, practicable and available to the industry, has therefore been proposed for the subcategory. It encompasses a combination of the various technologies employed by the different segments of the industry to control one or more constituents in the process waste waters.

Proposed effluent limitations and standards for the best practicable control technology currently available are:

Suspended Solids	0.064 kg/kkg (lb/1000 lb) of raw material
Oil and Grease	0.016 kg/kkg (lb/1000 lb) of raw material
pH	6.0 to 9.0

No additional reduction is proposed for the limitations and standards represented by best available technology economically achievable or for new sources coming on stream after the guidelines are put into effect.

For the purpose of establishing effluent limitations guidelines and standards of performance, the synthetic rubber industry has been subcategorized, on the basis of processing techniques, product type, and waste water characterizations, into three separate subcategories:

1. Emulsion crumb
2. Solution crumb
3. Latex

All three subcategories generate waste waters which contain the same general constituents. However, the concentration and loading of these constituents, termed "raw waste load", vary between the subcategories. The significant waste water constituents are COD, BOD, suspended solids, dissolved solids, and oil and grease. Latex production waste waters, although lower in flow per unit of production than the other two synthetic rubber subcategories, have the highest raw waste loads.

The waste water parameters selected to be the subject of the effluent limitations are COD, BOD, suspended solids, oil and grease and pH. These parameters are present in the waste water as a result of organic contamination. Heavy metals, cyanides and phenols were not found in significant quantities (less than 0.1 mg/L) in synthetic rubber process waste waters.

Existing control and treatment technology, as practiced by the synthetic rubber industry, emphasizes end-of-pipe treatment rather than in-plant reductions. This is because in-plant modifications which might lead to improved wastewater management could affect processing techniques or quality of the final product.

Current treatment technology for both emulsion crumb and latex plants involves primary clarification with chemical coagulation of latex solids, followed by biological treatment. As an alternative to chemical coagulation, air flotation clarification of primary and secondary solids is successfully practiced. Biological treatment systems include activated sludge systems and aerated lagoon and stabilization pond systems. Best practicable control technology currenty available for emulsion crumb and latex plants has been defined as that achieved by chemical coagulation and biological treatment.

Current treatment technology for solution crumb requires conventional primary clarification of rubber solid fines followed by biological treatment. Existing biological treatment systems employ aerated lagoon and stabilization pond systems or activated sludge plants. Best practicable control technology economically achievable for solution crumb production facilities has been defined as comparable to primary clarification and biological treatment.

Best available technology economically achievable for the three subcategories has been defined as equivalent to dual-media filtration followed by activated carbon treatment of the effluent from the biological treatment system to achieve acceptable COD removal.

Standards of performance for new sources are identical to best practicable control technology currently avaiable.

The proposed effluent limitations and standards of performance for plants within the three synthetic rubber subcategories are summarized as follows:

Best Practicable Control Technology Currently Avaiable and Standards of Performance for New Sources

	Emulsion Crumb Plants kg/kkg (lb/1000 lb) of product	Solution Crumb Plants kg/kkg (lb/1000 lb) of product	Latex Plants kg/kkg (lb/1000 lb) of product
COD	8.00	3.92	6.85
BOD	0.40	0.40	0.34
Suspended solids	0.65	0.65	0.55
Oil and Grease	0.16	0.16	0.14
pH	6.0 to 9.0	6.0 to 9.0	6.0 to 9.0

Best Available Technology Economically Achievable

	Emulsion Crumb Plants kg/kkg (lb/1000 lb) of product	Solution Crumb Plants kg/kkg (lb/1000 lb) of product	Latex Plants kg/kkg (lb/1000 lb) of product
COD	2.08	2.08	1.78
BOD	0.08	0.08	0.07
Suspended solids	0.16	0.16	0.14
Oil and Grease	0.08	0.08	0.07
pH	6.0 to 9.0	6.0 to 9.0	6.0 to 9.0

SECTION II

RECOMMENDATIONS

For plants in the tire and inner tube subcategory it is recommended that, wherever possible, process waste waters should be isolated from nonprocess waste waters to permit the economical treatment of the process waste water streams. Treatment of combined process and nonprocess waste waters may be more difficult and less effective due to dilution by the relatively large volume of nonprocess waste waters.

It is further suggested that uncontaminated waters, such as storm run-off, be detoured from outdoor areas where the potential exists for contamination by oil or solids. This could include roofing and curbing of storage areas and the collection and treatment of runoff which cannot be isolated from such areas.

The training of operators and maintenance personnel is important in any control technology. Negligent dumping of various processing solutions and lubricants into unsegregated drains within the plant should be eliminated or at least severely diminished. Washdown of potentially contaminated areas should be eliminated whenever possible. The number and location of in-plant drains should be kept at a minimum, to reduce the possibility of process waste water contamination to as few sources as possible. Many of the tire and inner tube plants visited during the study simply covered floor drains and curbed machinery and processing areas to prevent the leakage of oil and grease and suspended solids into the plant's main sewer system.

Wet air pollution equipment should be kept to a minimum. Discharges from wet equipment already in service should be recycled when possible. The use of dry-type pollution equipment is consistent with recovery efficiencies and prevention of waste water control problems.

In-plant modifications should be considered when they will lead to reductions in waste water flow, increased quantity of water used for recycle or reuse, and improvement in raw waste water quality.

End-of-pipe treatment technologies equivalent to secondary treatment should be applied to the waste waters from all synthetic rubber sub-categories to achieve best practicable technology currently available. For emulsion crumb and latex plants, chemical coagulation and clarification should be provided prior to biological treatment.

To achieve standards for best available technology economically achievable, end-of-pipe treatment technolgies equivalent to activated carbon adsorption of secondary treatment effluent is required on all waste waters originating in synthetic rubber plants.

Standards of performance for new sources, are identical to best practicable control technology currently available for all synthetic rubber subcategories.

Synthetic rubber utility, or nonprocess, waste waters as boiler blowdowns, cooling tower blowdowns, and water treatment plant wastes are commonly discharged to the plants' main waste water treatment facilities. With the exception of total dissolved solids and, in some cases, heavy metals such as chromium and zinc, the utility wastes are adequately treated at the main treatment facility. However, the control, pretreatment, and treatment technologies, and effluent limitation for nonprocess or utility waste waters in the rubber manufacturing subcategory will be covered by effluent guideline documents and regulations promulgated separately and at a future date.

SECTION III

INTRODUCTION

Purpose and Authority

Section 301(b) of the Act requires the achievement, by not later than July 1, 1977, of effluent limitations for point sources (other than publicly-owned treatment works) which are based on the application of the "best practicable control technology currently available" as defined by the Administrator pursuant to Section 304(b) of the Act.

Section 301(b) also requires the achievement, by not later than July 1, 1983, of effluent limitations for point sources (other than publicly-owned treatment works) which are based on the application of the "best available technology economically achievable" which will result in reasonable further progress toward the national goal of eliminating the discharge of all pollutants, as determined in accordance with regulations issued by the Administrator pursuant to Section 304(b) to the Act.

Section 306 of the Act requires the achievement by new sources of a Federal standard of performance providing for the control of the discharge of pollutants that would reflect the greatest degree of effluent reduction which the Administrator determines to be achievable through the application of the "best available demonstrated control technology, processes, operating methods, or other alternatives", including, where practicable, a standard permitting no discharge of pollutants.

Section 304(b) of the Act requires the Administrator to publish, within one year of enactment of the Act, regulations providing guidelines for effluent limitations setting forth:

1. The degree of effluent reduction attainable through the application of the best practicable control technology currently available.

2. The degree of effluent reduction attainable through the application of the best control measures and practices achievable (including treatment techniques, process and procedure innovations, operation methods, and other alternatives).

The regulations proposed herein set forth effluent limitations guidelines pursuant to Section 304(b) of the Act for the tire and inner tube and the synthetic rubber subcategories of the Rubber Processing Industry.

Section 306 of the Act requires the Administrator, within one year after a category of sources is included in a list published pursuant to Section 306(b) (1) (A) of the Act, to propose regulations establishing Federal standards of performances for new sources within such categories. The Administrator published, in the Federal Register of

January 16, 1973 (38 F.R. 1624), a list of 27 source categories. Publication of the list constituted announcement of the Administrator's intention of establishing, under Section 306, standards of performance applicable to new sources within the tire and inner tube and synthetic rubber subcategories of the rubber processing industry which were included in the list published on January 16, 1973.

The guidelines in this document identify (in terms of chemical, physical, and biological characteristics of pollutants) the level of pollutant reduction attainable through the application of the best practicable control technology currently available and the best available technology economically achievable. The guidelines also specify factors which must be considered in identifying the technology levels and in determining the control measures and practices which are to be applicable within given industrial categories or classes.

In addition to technical factors, the Act requires that a number of other factors be considered, such as the costs or cost-benefit study and the nonwater quality environmental impacts (including energy requirements) resulting from the application of such technologies.

Summary of Methods Used for Development of the Effluent Limitations Guidelines and Standards of Performance

The effluent limitations guidelines and standards of performance proposed herein were developed in a stepwise manner.

The development of appropriate industry categories and subcategories and the establishment of effluent guidelines and treatment standards require a sound understanding and knowledge of the rubber industry, the processes involved, water use, recycle and reuse patterns, characteristics of waste water, the respective raw waste loadings, and the capabilities of existing control and treatment methods.

Initial categorizations and subcategorizations were based on raw materails used, product produced, manufacturing process employed, and other factors such as plant age. Published literature was consulted to verify the raw waste characteristics and treatabilities in order to support the initial industry categorizations and subcategorizations. The raw waste characteristics for each tentative subcategory were then fully identified. Factors considered in this analysis were: the supply and volume of water used in the process employed; the sources of waste and waste waters in the plant; and the constituents, including thermal effects, of all waste waters together with those contaminants which are toxic or result in taste, odor, and color in water or aquatic organisms. The constituents of waste waters which should be subject to effluent limitations guidelines and standards of performance were identified.

The full range of control and treatment technologies existing within each subcategory was identified. This involved an identification of each distinct control and treatment technology (including both in-plant and end-of-pipe technologies) which are existent or capable of being designed for each subcategory. It also included an identification in

terms of the amount of constituents (including thermal effects), the chemical, physical, and biological characteristics of pollutants, and the effluent level resulting from the application of each of the treatment and control technologies. The problems, limitations/reliability of each treatment and control technology, and the required implementation time were also identified to the extent possible. In addition, the non-water quality environmental impact, such as the effects of the application of such technologies upon other pollution problems (including air, solid waste, noise, and radiation) was also identified to the extent possible. The energy requirements of each of the control and treatment technologies were identified as well as the cost of the application of such technologies.

The information, as outlined above, was then evaluated in order to determine what levels of technology constituted the "best practicable control technology currently available" the "best available technology economically achievable", and the "best available demonstrated control technology, processes, operating methods, or other alternatives for new sources". factors were considered. These included the total cost of application of technology in relation to the effluent reduction benefits to be achieved from such application, the age of equipment and facilities involved, the process employed, the engineering aspects of the application of various types of control technique process changes, the non-water quality environmental impact (including energy requirements), and other factors.

Raw waste water characteristics and treatability data, as well as information pertinent to treatment reliability and cost evaluations, were obtained from several sources, including: EPA research information, published literature, Corps of Engineers Permit to Discharge Applications, industry historical data, and expert industry consultation.

On-site visits and interviews were made to selected tire, inner tube, and synthetic rubber production plants throughout the United States to confirm and supplement the above data. All factors potentially influencing industry subcategorizations were represented by the on-site visits. Detailed information on production schedules and capacities, and product breakdowns as well as water use and waste water control and treatment management practices were obtained. Flow diagrams showing water uses and process waste water stream interactions were prepared. Control and treatment design data and cost information were compiled. Individual, raw and treated effluent streams were sampled and analyzed to confirm company furnished data in order to characterize the raw wastes and determine the effectiveness of the control and treatment methods. Duplicate samples were analyzed by the participating companies to confirm the analytical results.

General Description of the Industry

The categories of the rubber processing industry covered by this document are the tire and inner tube (SIC 3011) and the synthetic rubber (SIC 2822). The manufacture of tires and inner tubes utilizes

completely different processing techniques than the production of synthetic rubber. In a tire or inner tube plant, stock rubber production follows a very definite formulation or recipe, and is a batching operation.

The mixed stock production is used to produce the five main components of a tire: tire bead coating, tire treads, tire side wall, inner liner stock and coated cord fabric. These five components enter the tire building plant, where a significant amount of hand and machine lay-up is required to produce the green tires.

The synthetic rubber (or vulcanizable elastomer) industry is characterized essentially by the chemical process and unit operations necessary to convert the particular monomers or starting-block materials into a stabilized, granulated, extruded, or baled material suitable for more conventional rubber processing. The processes are characterized by separation of unreacted monomer, recovery, purification and recycle of the monomer, and processing of the converted elastomer. These reactions are normally carried out batch-wise or batch/continuous.

In view of the fact that these two industry classifications, tire and inner tube manufacture and synthetic rubber production, differ considerably it is appropriate, from this point on, to describe and evaluate their water uses and waste water generations separately.

Tire and Inner Tube Industry

Tire Manufacture

There are many events that have had a significant effect on the tire and inner tube industry. The first is the discovery, by Charles Goodyear in 1839, that rubber could be cured or vulcanized with sulfur. Thus, Goodyear was able to overcome the tacky, plastic properties of rubber, thereby creating a product of commercial applicability (1).

The year 1906 saw the development of the first organic accelerators. Accelerators are substances which affect the rate of vulcanization. With the entry of such substances, better products could be produced in a shorter period of time (1,2).

The next major event to affect the tire industry was the advent of the Second World War. With the drastic reduction in the supply of natural rubber, new sources had to be developed. The first substitute was reclaimed rubber which, by 1943, had completely replaced natural rubber as the basic tire material. It was not until the mid 1940's that synthetic rubber, made available due to a major governmental effort, became the major substitute for natural rubber. By 1945, approximately 98 percent of the natural rubber had been replaced by this synthetic substitute (3). The years following the war saw the return, to a great extent, of natural rubber. However, with the technological boost given the synthetic rubber industry, it would soon again become the larger portion of the tire.

The next major event which occurred in the mid-1950's was the introduction of tubeless tires as original equipment on new cars. This development sent the inner tube industry into rapid decline. The total number of passenger car and motorcycle inner tube units dropped from in excess of 49 million in 1954 to less than 25 million in 1955 (4).

The tire industry has had three eras of rapid expansion to coincide with these events. The post World War I era (1916-1929) brought the first such development. As the automobile and truck industry expanded, so did the tire industry. Large capacity tire plants were built in Ohio, California, and New England. The depression reversed this trend however, and it was not until World War II created an increased demand for tires that the tire industry again began to expand. New plants were erected in Ohio, New England, and the South. The third building expansion started in the early 1960's and is still proceeding, again occurring simultaneously with the expansion of the economy.

With the current expansion, tire companies are now located throughout the United States. Whereas the older plants of the first two expansions are located in the urban areas of Ohio, California, and New England, the newer plants are being located in rural areas with no particular emphasis placed on geography.

Today's tire manufacturer produces many types of tires designed for a multitute of uses. General product categories include passenger, truck and bus, farm tractor and implement, and aircraft. Table 1 presents a breakdown of these products for the last five years.

The key to the performance of all tires is the selection of the raw rubber and compounding materials and the proportion of these materials in any particular part of the tire. Basically, the tire consists of five parts, namely: the tread, the sidewall, the cord, the bead, and the inner liner. Each part has different service requirements; therefore, each requires a different proportion of the raw materials. For example, longevity and good traction are requirements of the tread, whereas a high degree of flexibility is the requirement for sidewalls. Basic tire ingredients include synthetic rubbers, natural rubber, various fillers, extenders and reinforcers, curing and accelerator agents, antioxidants, and pigments.

A wide variety of synthetic rubbers are used including styrene budadiene rubber (SBR), polybutadiene, butyl, polyisoprene, and ethylene-propylene diene rubber (EPDM). Of the three categories of compounding materials used, the fillers, extenders and reinforcers are the most important. These are used:

1. To dilute the raw crumb rubber in order to produce a greater weight or volume.

2. To increase the strength, hardness, and abrasion resistance to the final product.

TABLE 1

U.S. Tire and Inner Tube Production (Including Retreading) for 1967-1971

Year	Tires (in million units)					Inner Tubes[2]	Retreading Rubber[2]	
	Passenger Cars	Trucks and Buses	Farm Tractor and Implement	Aircraft	Miscellaneous[1]	million units	kkg	Long Tons
1967	100.006	21.165	5.554	0.772	16.445	60.479	255,741	251,714
1968	128.967	25.533	5.741	1.040	17.870	65.840	276,989	272,726
1969	134.540	27.211	4.058	0.892	18.421	60.875	271,681	267,403
1970	123.356	25,680	3.568	0.822	6.866	51.534	282,576	278,126
1971	138.151	28,461	4.099	0.731	9.409	55.067	276,248	271,898

[1] Includes motorcycle, industrial, garden tractor, and bicycle tires.
[2] Includes all tire classifications.

Source: ''Rubber Industry Facts'', Statistical Department, Rubber Manufacturers Association , New York.

Of these, carbon black and oil are the most common. A typical rubber compound might be described as follows (1):

100 parts rubber
50 parts fillers, extenders, and reinforcers
3.5 parts curing and accelerator agents
8.0 parts antioxidants and pigments

The typical tire manufacturing process consists of the following:

1. Preparation or compounding of the raw materials.

2. Transformation of these compounded materials into the five tire components.

3. The building, molding, and curing of the final product.

A flow diagram for the typical plant is shown in Figure 1.

The basic machinery units used in the compounding operation are the Banbury mixer and the roller mill. A Banbury mixer is a batch-type internal mixing device and is the hub of this compounding operation. The Banbury is used for two operations. In the first, the fillers, extenders and reinforcing agents, and the pigments and antioxidant agents are added and mixed into the raw rubber stock. The resulting mixture is known as non-productive or non-reactive rubber stock. Because no curing agents have been added, this material will have a long shelf life, thus allowing large quantities of a particular recipe to be made and stored for later use. In the second operation, the curing and accelerator agents, in additon to a small quantity of the original list of elements, are added. This mixture, known as productive or reactive rubber stock, now meets the particular compounding requirements of its final destination. Since it contains the curing agents, this mixture has a short shelf life and will be used almost immediately.

Carbon black and oil are added to the rubber in the compounding operation. To avoid many of the housekeeping problems created by both carbon black and oil, these ingredients are added automatically. Carbon black is a finely divided amorphous material that has the consistency of dust and is easily airborne. The compounding area is equipped with air pollution equipment to control this problem. Bag house particulate collectors are normally used which can produce removal efficiences of essentially 100 percent when designed, maintained, and operated correctly.

After mixing, the compound is sheeted out in a roller mill, extruded into sheets, or pelletized. The process depends on the type of batch (reactive or non-reactive) and the manufacturer. Pelletizing of a non-reactive batch enables the weighing and mixing of the reactive stock to be done automatically. The reactive compounded rubber is always sheeted out.

FIGURE 1

GENERAL WATER FLOW DIAGRAM FOR TYPICAL TIRE AND CAMELBACK PRODUCTION FACILITY

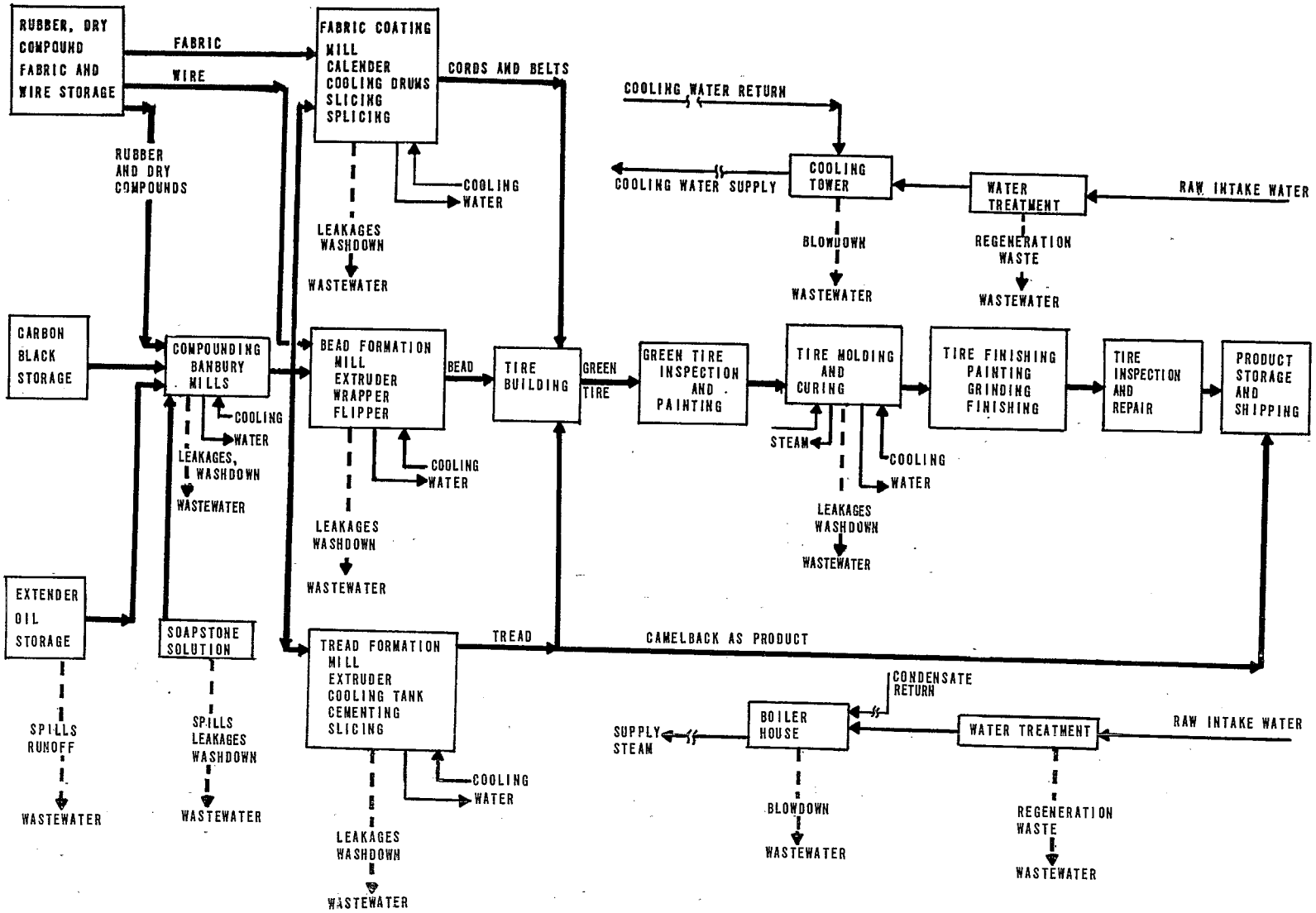

The sheeted material is tacky and must be coated with a soapstone solution. This solution is a slurry which, when allowed to dry on the sheeted materials, prevents them from sticking together during storage.

Because it is a slurry the soapstone solution is usually recirculated. Releasing the material into a waste water stream would create a difficult solids problem. Spills in the soapstone area are common and do create a maintenance and waste water problem.

If a manufacturer wishes to exclude soapstone in his final effluent, he must provide a method for coping with these spills. Current techniques include the blocking of all drains in the area, diking of the area, and the use of steel grates on the floors. The diking and sealing of drains prevents the slurry from entering the drainage system. The use of steel grates helps decrease the risk of workers slipping on spilled soapstone.

Maintenance and housekeeping problems in this area are further complicated by the leakages of oil and water from the oil seals in the mills, and oil and dust from the dust ring seals of the Banburys. Each has the potential to become a waste water pollutant if allowed to mix with the cooling water discharges or to be washed down and discharged without treatment.

The rubber stock once compounded and mixed must be molded or transformed into the form of one of the final parts of the tire. This consists of several parallel processes by which the sheeted rubber and other raw materials, such as cord and fabric, are made into the following basic tire components: tire beads, tire treads, tire cords, and tire belt (fabric). Tire beads are coated wires inserted in the pneumatic tire at the point where the tire meets the steel wheel rim (on which it is mounted); they insure a seal between the rim and the tire (2). The tire treads are the part of the tire that meets the road surface; their design and composition depend on the use of the tire. Tire cords are woven synthetic fabrics (rayon, nylon, polyester) impregnated with rubber; they are the body of the tire and supply it with most of its strength. Tire belts stabilize the tires and prevent the lateral scrubbing or wiping action that causes tread wear.

In the formation of tire treads, the rubber stock as it is received from the compounding section is manually fed to a warm-up roller mill. Here the rubber is heated and further mixed. Heat is provided by the conversion of mechanical energy. Temperature control is provided by the use of cooling water within the rolls of the mill.

The heated stock passes from the warm-up mill to a strip-feed mill where it receives its final mixing. This mill is also cooled to control the temperature of the stock. The stock is peeled off the rollers of the mill in a thin strip which is fed continuously to an extruder. The mixing of the stock in these mills insures that the final tread will have homogeneous properties. The heating or temperature control of the stock is necessary to insure a proper extrusion with a minimum consumption of power (2).

At the extruder, two types of rubber stocks originating from two different strip mills are joined together to form the tire tread and sidewalls. The tread leaves the extruder as a continuous strip while still hot and therefore tacky. Next a cushioning layer is attached to the under side of the tread. The tread is then cut to the proper width, cooled in a water trough, labeled, and then cut to the proper length. Trimmings are either manually or automatically transferred back to the proper strip-feed mill and reprocessed. The ends are coated with rubber cement and the tread is then placed in a "tread book" and sent to the tire building machines.

Wastewater problems in this area arise from the spillage of the solvent base cements, from oil and water leakages from the various mills, and from accidental overflows from the cooling water system. The cooling water overflow would not normally be a problem since the rubber tread is relatively inert and therefore does not contaminate the water. However, it does serve as a washdown agent for an area contaminated with the cements and oils.

To produce tire cords and belts, rubber stock must be impregnated onto a pretreated fabric. The fabric is let off a roll, spliced onto the tail of the previous roll (either adhesively or by a high-speed sewing machine), and fed under controlled tension (via a festooner) to a latex dip tank. After dipping and while still under tension, the fabric is fed past vacuum suction lines or rotating beater bars to remove the excess dip before the fabric rises through a drying and baking oven.

After pretreatment, and still under tension, the fabric is passed through a calendering machine where rubber is impregnated into the fabric. The rubber fabric is next cooled by large water or refrigerant cooled drums; after cooling, the tension can be released. This treated fabric is still not ready for the tire building operation. To achieve the proper bias it must be cut to the proper angle and length, and then spliced together again. The angle and length will vary depending on the size of the tire for which it is used and whether it is a cord or belt. Once spliced, the fabric is rolled in cloth and sent to the tire building.

The rubber used to impregnate the fabric proceeds through an operation similar to that of the tread process. It passes through both a warm-up mill and a strip-feed mill prior to impregnation onto the fabric. Wastewater problems in this area arise due to the latex dripping operation and to problems with oil and water leaks and spillages which are similar to those of the tread process.

Many tire manufacturers are transferring their latex dip operations from individual plants to one large central facility. In most cases, the reasons behind such a decision are as follows:

1. A minimal dipping operation requires a large capital expenditure.

2. The fabric dipping and coating operation is one of the fastest operations in the plant and, as such, is readily capable of over-supplying the plant with fabric.

3. Dipped fabric is not that more expensive to ship then undipped fabric.

4. The maintenance and housekeeping requirements of the dip operation are limited to one facility.

In the processing of rubber stock to tire beads, the rubber is extruded onto a series of copper-plated steel wires, which are then cemented, wrapped, and cut. The rubber stock is pretreated, as before, in a warm-up mill and strip-feed mill. Excess rubber is trimmed from the bead before it leaves the extruder and is fed back to the strip feed mills. To apply cement the coated wire is passed through a trough or set of brushes. The cement is necessary to insure the proper adhesion of the bead when it is wrapped.

Wastewater problems can arise due to the use of the mills or from the spillage or overflow of the cement. They will be similar in nature to those found in this tread formation process.

The inner lining for the tire is formed by calendering or extruding the rubber stock in a manner similar to either the formation of cord fabric or tread rubber. It is this inner liner that enables a tire to be tubeless since it is light and air impervious.

The tire is built up as a cylinder on a collapsible, round rotating drum. First the inner liner is applied to the drum. Then layers of cord are applied, one layer tying the beads together in one direction and another layer in the other direction. The beads are attached to the tire by folding over the ends of the cord fabric. Next the tire belt fabric is laid onto the cord. Finally the tire tread is placed over the cords and fabric and wrapped around the beads. The cylinder is removed. These green tires (uncured tires) are now ready for final processing.

Before molding and curing, the green tire is sprayed with release agents. These agents aid in the release of air from the tire during molding and of the tire from the mold after curing. Both water- and solvent-based sprays are used. Excess spray is released to the atmosphere. In most plants the tires are placed in a hood during spraying to reduce atomospheric contamination. Wastewater is generated by wet scrubbers where used to scrub the excess spray from the air.

The potential for waste water streams exist due to the possibility of solvent spills within this area. If wet scrubbers are used to scrub the excess spray from the air, another waste water stream will exist.

The tire is molded and cured in an automatic press. Here an inflatable rubber bladder bag is inflated inside the tire, causing the tire to take its characteristic doughnut shape. The mold is simultaneously closed over the shaped tire. Heat is applied by steam via the mold and bladder

bag. Excess rubber and trapped air escape through weepholes. After a timed, temperature-controlled cure, the press is cooled, the bladder is deflated via a vacuum, and the tire is removed. The tire is next inflated with air and left to cool in the atmosphere. This last inflation insures product quality and uniformity by allowing the tire to "set up" or achieve the final limits of its cure under controlled conditions.

Because of the large number of presses in the typical plant, there is always the potential for a mold to leak or for a bladder to break. This water is released and scavenges some of the large amounts of lubricating oil used in this area. This oily water creates a water contamination problem if it is discharged.

After the molding and curing operations, the tire proceeds to the grinding operation where the excess rubber which escaped through the weepholes is ground off. If the tire is designated to be a whitewall, additional grinding is performed to remove a black protective strip. Most tires receive further grinding of the tread in order to balance the tire.

The weepholes which are ground off are relatively large particles of rubber which fall to the floor and are swept up. Their final destination is a landfill. The grindings from the white sidewall operation are relatively small and will stay airborne for long periods of time. The industry generally uses a particulate collection device such as cyclone or wet scrubber to control these emissions. The discharge from a wet scrubber will have a high solids content and will therefore be a wastewater problem. The balancing operation suffers the same problems as the white sidewall grinding operation.

After the grinding operations, the whitewall portion of a tire receives a protective coat of paint. The paint is generally water based. This operation usually occurs in a hooded area. Again, any wet air pollution equipment or runoff due to over spraying of the paint will create pollution problems. After inspection and possibly some final repairs, the tire is ready to be shipped.

Table 2 presents a review of the potential sources of waste water streams as discussed above.

The discussion thus far has described a typical tire plant, and applies most readily to the production of the passenger tire. There are several variations. The first of these is due to the production of truck and industrial tires. Truck tires tend to have a greater amount of natural rubber in their treads. Natural rubber, as received in the plant, is much harder to handle than synthetic rubber. Additional roller mills are needed to break up and soften the rubber before it enters the Banbury mixer. There are also major differences in the building and molding of the tires as the larger sizes are approached. The building of a "giant off-the-road tire" requires the services of two men each for a half a day, whereas the passenger tire can be built in less than 5 minutes. Larger tires are cured in giant molds which are not automatically operated. Cranes or hoists are required to open and close these

Table 2

Summary of Potential Process-Associated Wastewater Sources from the Tire and Inner Tube Industry

Plant Area	Source	Nature and Origin of Wastewater Contaminants
Oil Storage	Run off	Oil
Compounding	Washdown, spills, leaks, discharges from wet air pollution equipment	Solids from soapstone dip tank Oil from seals in roller mills Oil and solids from Banbury seals Solids from air pollution equipment discharge
Bead, Tread, Tube Formation	Washdown, spills, leaks	Oil and solvent-based cements from the cementing operation Oil from seals in roller mills
Cord and Belt Formation	Washdown, spills, leaks	Organics and solids from dipping operation Oil from seals, in roller mills, calenders, etc.
Green Tire Painting	Washdown, spills,air pollution equipment	Organics and solids from spray painting operation Soluble organics and solids from air pollution equipment discharge
Molding and Curing	Washdown, leaks	Oil from hydraulic system Oil from presses
Tire Finishing	Washdown, spills, air pollution equipment	Solids and soluble organics from painting operation Solids from air pollution equipment discharge

molds. Curing can take up to 24 hours. Hot water, instead of steam, is used in the curing operation. The process variations associated with truck and industrial tire production do not have a significant effect on the quantity and quality of the waste waters generated when compared to those from automobile tire production.

Another variation in the typical tire production is the manufacture of camelback. Camelback is tread used for tire retreading (2). It is produced in the same manner as tread used for newer tires. (See flow diagram, Figure 1.) Since camelback production operations are usually part of a tire production facility feeding off the same machinery, waste water problems will be similar to those already discussed.

Radial tire production offers another variation to the overall process. Radial tires, like truck tires, contain more natural rubber, thus requiring more machinery in the compounding area. Whereas bias-ply tires are built in the form of a hollow cylinder, radial tires are built in the doughnut shape of the final product. Like truck tires, radial tires are cured using hot water instead of steam. Again waste water problems will be very similar to those of the typical passenger tire manufacture.

Inner Tube Manufacture

Inner tube manufacture is very similar to tire manufacture in that the process consists of the following steps:

1. Preparation or compounding of the raw materials.
2. The extension of these compounded materials to form a tube.
3. The building, molding, and curing to form the final product.

A flow diagram for the typical process is shown in Figure 2.

The basic machinery used in the compounding operation is similar to that used in tire manufacture; namely, Banbury mixers and roller mills. Both non-reactive and reactive stocks are prepared. One minor distinction of inner tube manufacture is the high usage of butyl rubbers. In addition, a soap rather than a soapstone solution is sometimes used to coat the non-reactive stock. The soap solution is not discharged and is used in a completely closed-loop system with solution make-up. In general, waste water problems arising from this section are similar to those of the typical compounding area of a tire plant; that is, leakages and drippings of oily and particulate material.

The process by which the tube is formed is similar to the extrusion of the tread. The compounded rubber is fed to an extruder via a warm-up mill and strip-feed mill. Here the rubber is extruded into a continuous cylinder. To keep the inside of the tube walls from sticking to each other, a dry soapstone powder is sprayed inside the tube as it is formed in the extruder. The tube is labelled and passed through a water cooling tank. After cooling, the water is blown off the tube and soapstone powder is sprayed on the outside of the tube. Excess powder must be collected in either a dry or wet collection device. If a wet collection device is used, the discharge will be heavily laden with

FIGURE 2

GENERAL WATER FLOW DIAGRAM FOR A TYPICAL INNER TUBE PRODUCTION FACILITY

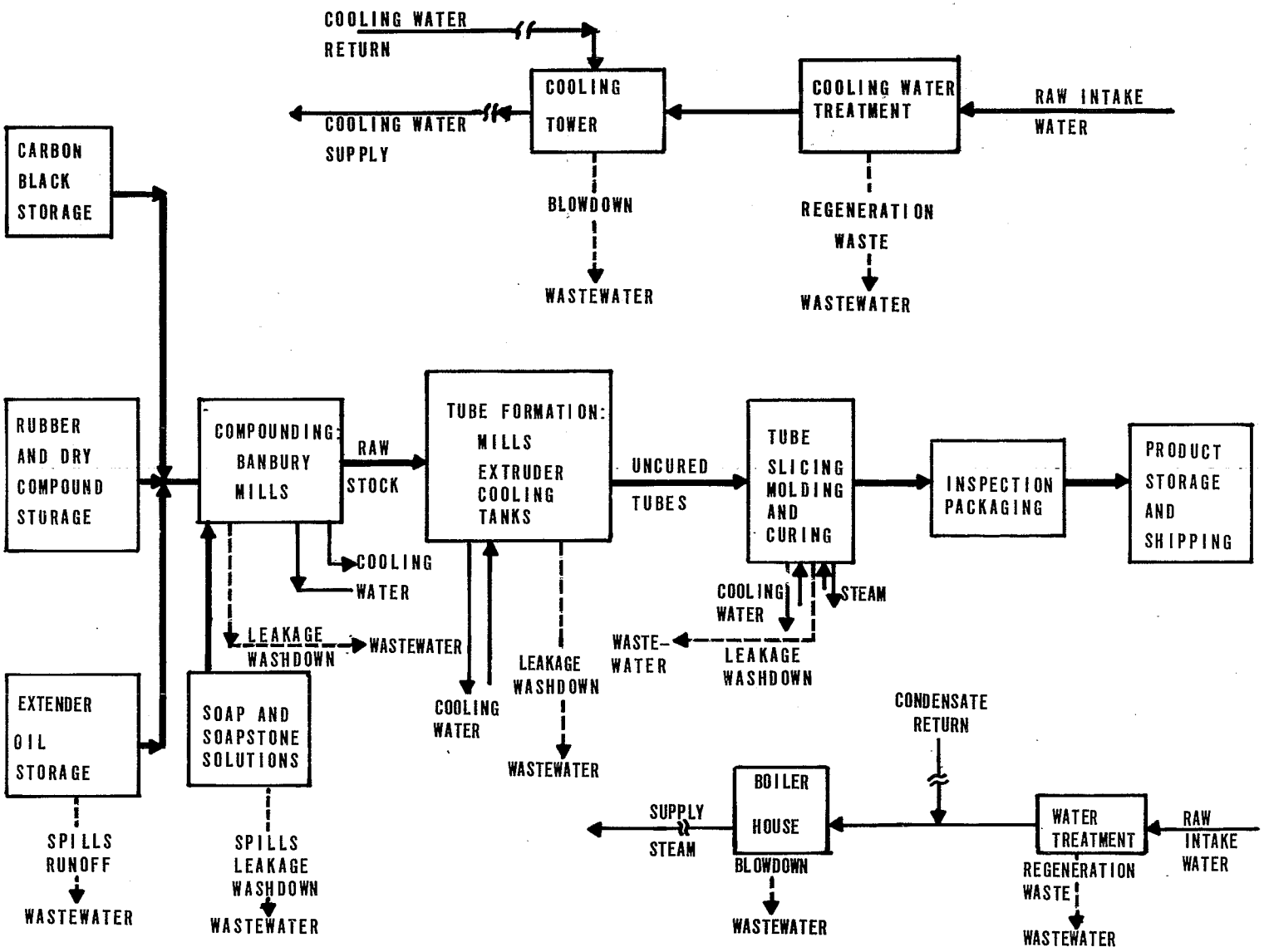

solids. Other waste water problems are similar to those found in the tread formation process of tire manufacture.

Once extruded, the tube must be cut to length and the ends spliced together. A valve must also be attached. There is no potential wastewater problem arising from this area of operation.

Once formed, the tube must be molded and cured. Again, this operation is very similar to that of the tire manufacture. Wastewater problems include only water leakage and spills.

After curing, the tube is inspected for defects, packaged and sent to warehousing and shipping. Table 2 summarizes the potential sources of waste water streams as discussed above.

Synthetic Rubber Industry

General

The synthetic rubber industry is responsible for the sythesis of vulcanizable elastomers by polymerization or co-polymerization processes. For the purpose of this classification, an elastomer is a rubber-like material capable of vulcanization.

The U.S. Synthetic Rubber Industry was fostered by the commencement of World War II when it was realized that supplies of natural rubber could be shut off by the enemy. The rubber first chosen for production was called GR-S (Government Rubber-Styrene) and would now be grouped under SBR (styrene-butadiene rubber). Since the war the price of natural rubber has been subject to great fluctuations, whereas the price stability of synthetic rubbers has undoubtedly contributed to their acceptance by the consumer. Since the introduction of GR-S, many new synthetic rubbers have been synthesized and produced on a commercial scale.

The demand for the various types of synthetic rubber is greatly affected by the needs of the tire manufacturers. Not only are tire sales important, but process and product changes within the tire industry also influence the relative demands for the various rubbers. For example, radial tires at present contain considerably more natural rubber than conventional tires. At this moment, this has little effect on the consumption of synthetic rubber because radial tires constitute a small percentage of total tire production, but it does illustrate the kind of factor which can influence synthetic rubber consumption. The U.S. production of the principal synthetic rubbers for the last several years is presented in Table 3 together with the growth projections for the period between now and 1980. It can be seen that production of SBR-type rubber overshadows other synthetic rubber. Although the greatest growth rates over the next several years will be associated with polyisoprene and ethylene-propylene terpolymer (EPT) productions, overall the relative levels of synthetic rubber production will not be appreciably different from what they are today because the present base productions of polyisoprene and EPT are considerably lower than that of SBR, the

Table 3

U.S. Synthetic Rubber Production by Type (1,000 Long Tons) for 1967 to 1971 and the Projected Growth Rate to 1980

Years	S-Type	Butyl	Nitrile	Polybutadiene	Polyisoprene	Ethylene Propylene	Misc.[1]	Total
1967	1,244	114	62	201	----------105---------		186	1,912
1968	1,389	113	71	217	----------140---------		201	2,131
1969	1,403	130	69	263	109	75	201	2,250
1970	1,331	118	67	280	120	63	218	2,197
1971	1,417	106	65	254	117	60	222	2,241
Projected Annual Growth Rate (%)	3.4	2.7	5.2	7.0	16.0 to 1975 8.0 to 1980	16.0 to 1975 10.0 to 1980	-	-

[1] Includes Polychloroprene (Neoprene) rubber

Sources: Production data from "Rubber Industry Facts", Statistical Dept., Rubber Manufacturers Association.

Production growth rates furnished by Chem System, Inc., New York.

principal synthetic rubber (5). This supports the assumption that there will be no radical changes in the industry, its products, and even its production processes in the foreseeable future.

The synthetic rubbers as listed under SIC 2822 include both the socalled tire rubbers and the specialty rubbers. The tire rubbers are typically high production volume commodities, and, as their name suggests, they are used predominantly by the tire industry. Rubber used in the tire industry is supplied in a solid form termed crumb rubber. Several different families of tire rubber are made in order to provide all the essential and varying properties required in a modern vehicle tire.

Not all tire rubber production is used in tire manufacture, however. Much is used to manufacture rubber hose, belting, electrical wire and cable, footwear, mechanical rubber goods, and many other rubber-based products. Due to their superior oil and heat resistance, both nitrile and neoprene type rubbers are used more for hose, seals, gaskets, and O-rings than for tire manufacture. However, because their annual production

volume is comparable with four of the other five major synthetic rubbers used in tire manufacture, they will be considered here as tire rubbers. The tire rubbers are grouped into seven families based on their monomeric ingredients as shown in Table 4. The annual U.S. production, polymerization process, principal end-use and other family members are also presented.

By contrast, the speciality rubbers are low production volume commodities with more diverse compositions and end uses. The largest production volume family of the speciality rubbers are the butadiene rubbers. Butadiene rubbers are generally sold in latex form. The production is similar to the production of all synthetic rubber latexes (2). Epichlorohydrin is solution polymerized with various monomers to produce the family of epichlorohydrin co-polymer rubbers. The process is similar to that for solution tire rubbers. Epichlorohydrin rubbers are used for seals, gaskets, and O-rings, etc. (6). The acrylic rubbers areproduced by an emulsion polymerization process similar tothe emulsion processes used for the tire rubbers. Acrylics are used for high temperature service in drive=train and axle seals, hose, tubing, and molded parts. Polyisobutylene is produced by a solution polymerization process similar to that for butyl rubber (1). It is used primarily as a blend in caulking compounds, adhesives, and plastics.

Three of the so-called specialty rubber families (silicone rubbers, urethane rubbers, and fluorocarbon derivative rubbers) are being studied as part of the plastics industry and, as such, are not covered in this document. The chlorinated and chlorosulfonated polyethylene rubbers are manufactured by processes similar to those employed for the polyethylene type plastics and are not covered in this document (2). The polysulfide rubbers are produced by a condensation process which is different from the general emulsion and solution polymerizations (2). In addition, the waste waters generated by polysulfide production are highly contaminated and deemed more difficult to treat than the waste waters produced by

TABLE 4

Families of Synthetic Rubbers Included in SIC 2822, Polymerization Processes, and Annual U.S. Production (1972)

Principal Synthetic Rubber	Annual U.S. Production (1,000 Metric Tons/year)	Polymerization Process	Principal End-use	Other Family Members
Tire Rubbers				
Styrene-Butadiene rubbers (SBR)	1,678 139	Emulsion Solution	General tire use Tire treads	
Polybutadiene rubbers (PBR)	368	Solution	Tire treads	
Polyisoprene rubbers	139	Solution	Tire treads	
Polyisobutylene-Isoprene rubbers (Butyl)	163	Solution	Inner tubes	
Ethylene-Propylene Co-polymer rubbers (EPR)	169	Solution	General tire use, non-tire goods	EPDM
Acrylonitrile-Butadiene rubbers (Nitrile)[1]	159	Emulsion	Hose, seals, gaskets, O-rings	
Polychloroprene rubber (Neoprene)[1]	177	Emulsion	Non-tire use, general tire use	Neoprene, Nitrile-Chloroprene rubber, Styrene-Chloroprene rubber
Tire Rubber Sub-Total:	2,992			
Specialty Rubbers				
Butadiene rubbers	64	Emulsion	Adhesives, dipped goods, paints	Pyridine-Butadiene rubber
Epichlorohydrin rubber	9	Solution	Seals, gaskets and O-rings	Cyclo rubber
Acrylic rubbers	2	Emulsion	Seals, hosing, tubing	Acrylate type rubber, Acrylate-Butadiene rubber
Polyisobutylene rubbers	4	Solution	Caulking, adhesives, plastics	
Silicone rubbers[2]	10	Condensation	Seals, gaskets, electrical tape	
Polyurethane rubbers[2]	14	Condensation	Solid tires, rollers, foams, fibers	Adiprene, Estane, Isocynate type rubber
Fluorocarbon derivative rubbers[2]	1	Emulsion	Seals, gaskets, O-ring, high temperature service	Viton, Fluoro rubber
Chlorosulfonated Polyethylenes[3]	15	Post-polymerization chlorination	Wire and cable, shoes, linings, paints	Chlorinated rubber, Hypalon
Polysulfide rubbers[4]	10	Condensation	Sealing, glazing, hose	Thiol
Specialty Rubber Sub-Total	129			
Synthetic Rubber Total	3,121			

1 Although Nitrile and Neoprene-type rubbers are not normally termed tire rubbers, they are relatively large production volume rubbers and, for convenience, can be included with the major tire rubbers.

2 Silicone, Polyurethane and Fluorocarbon derivative rubbers are considered part of the Plastics and Synthetics industry and are not covered by this document.

3 Chlorosulfonated and chlorinated polyethylenes should be considered part of the Plastics and Synthetics industry. They are not covered by this document.

4. Polysulfide rubbers are produced by a condensation-type reaction which is not directly comparable to either emulsion or solution polymerization. Per unit of rubber production, generated wastewaters are of considerably poorer quality and more troublesome to treat than those of either emulsion or solution or solution processes. Polysulfide rubber production is not covered by this document. It is recommended that a separate study be made of the polysulfide rubber industry.

Source: "The Rubber Industry Statistical Report" - C.F. Ruebensaal, International Institute of Synthetic Rubber Producers, Inc.

conventional emulsion or solution polymerization processes. It is therefore intended that a separate study will be made of the polysulfide rubber sector of the synthetic rubber industry.

The various methods of production of the synthetic rubber have much in common. The monomers are not particularly difficult to handle at reasonable pressures, and suitable inhibitors have been developed to impart storage stability. Dissipation of the heat of polymerization is frequently the controlling consideration. Adjustment of reaction rate to distribute the heat generation over a reasonable period of time, the use of refrigeration cooling, and operation in dilute media such as emulsions or solutions are necessary for the adequate control of polymerization reactions.

Control of molecular weight and of molecular configuration has become a very important quality consideration. The ability to control molecular weight has led to the development of oil-extended rubber. It has been found that rubber of unusually high molecular weight and normally too tough to process through factory equipment can be made workable by the addition of up to 50 parts of petroleum-base oils per 100 parts of rubber. These extending oils make the rubber easier to process without sacrifice in physical properties. Another improvement has been the preparation of black masterbatches, the name given to mixtures of carbon black and rubber without the curing ingredients. This process is of great importance to small manufacturers and tire retreaders who lack facilities for mixing in carbon black or who wish to avoid atmospheric pollution with the fine black.

Synthetic Rubber Production

Emulsion Crumb Production

Of the several methods of polymerization employed to produce synthetic rubber, the two most commonly used processing techniques are polymerization in homogeneous solution and polymerization in emulsion. Solution polymerization may be considered to include bulk polymerization where excess monomer serves as a solvent. Emulsion polymerization may be considered as the bulk polymerization of droplets of monomers suspended in water. Emulsion polymerization is performed with sufficient emulsifier to maintain a stable emulsion. Solution polymerizations generally proceed by ionic mechanisms. Polymerization initiators which operate by ionic mechanisms are usually too reactive to be stable in water, emulsion polymerization systems are initiated by agents which produce free radicals (2).

Emulsion polymerization is the traditional process for the production of synthetic rubber. Since World War II (and for the foreseeable future), the bulk of synthetic rubber has been produced via emulsion polymerization. The use of emulsion polymerization systems is common because both high conversion rates and high molecular weights are possible. In addition, other advantages are: a high rate of transfer of the heat of polymerization through the aqueous phase, ready removal of unreacted monomers, and high fluidity even at high concentrations of

polymer. The majority (more than 90 percent) of styrene-butadiene rubber (SBR), the principal synthetic rubber, is produced by emulsion polymerization. The emulsion polymerization process is used to produce either rubber latex or rubber crumb. Crumb is solid and is usually formed into 75 pound bales.

Figure 3 shows a generalized materials flow diagram for the continuous production of crumb SBR by the emulsion polymerization process. This schematic is essentially typical of all emulsion processes. In the typical production facility, operation is 24 hours per day, 365 days per year. Each plant consists of several production lines where different process recipes can be applied and various types of SBR can be produced, including non-extended, oil extended, and carbon black masterbatch varieties.

Styrene and butadiene (monomers) are either piped to the plant from adjacent suppliers, or shipped in by tank car or tank truck. The monomers are stored in a tank farm which is diked to retain major monomers spills and leakages and, in the case of fire, to control the spread of flaming liquid. The fresh monomers are piped to the plant from the tank farm and, if necessary, passed through a caustic soda scrubber before mixing with recycle monomers. Some monomers, such as butadiene, have inhibitors added to prevent premature polymerization during shipment and storage. These must be removed before the monomer can be polymerized. The inhibitor is removed in the caustic scrubber by the circulation of a caustic soda solution, approximately 20 percent. The caustic soda solution is discarded periodically or can be subjected to continual make-up and blowdown.

Soap solution, catalyst, activator, and modifier are added to the monomer mixture prior to entering the polymerization reactors. The soap solution is used to produce an emulsion of the monomers in an aqueous medium. The principal ingredients of this solution are generally a rosin acid soap and a fatty acid soap. The catalyst is a free radical initiator and can be a hydroperoxide or a peroxysulfate. The catalyst initiates and promotes the polymerization reaction. The activator assists in generating the free radicals more rapidly and at lower temperatures than by thermal decomposition of the catalyst alone. The modifier is an additive which adjusts the chain length and molecular weight distribution of the rubber product during polymerization. It is necessary that all the above solutions be made with high quality water. Usually city or well water is deionized for the preparation of the solutions.

The polymerization proceeds stepwise through a train of reactors. The reactor system is capable of producing either " (40-45°F, 0-15 psig) or "hot" (122°F, 40-60 psig) rubber. The "cold" SBR polymers, produced at the lower temperature and stopped at 60 percent conversion, have improved properties when compared to "hot" SBR's. The "hot" process is the older of the two. For "cold" polymerization, the monomer-additive emulsion is cooled prior to entering the reactors, generally by using an ammonia refrigerant cooling medium. Depending on the polymerization temperature, the medium could be chilled brine or chilled water. In ad-

FIGURE 3

GENERAL WATER FLOW DIAGRAM FOR AN EMULSION POLYMERIZED CRUMB RUBBER PRODUCTION FACILITY

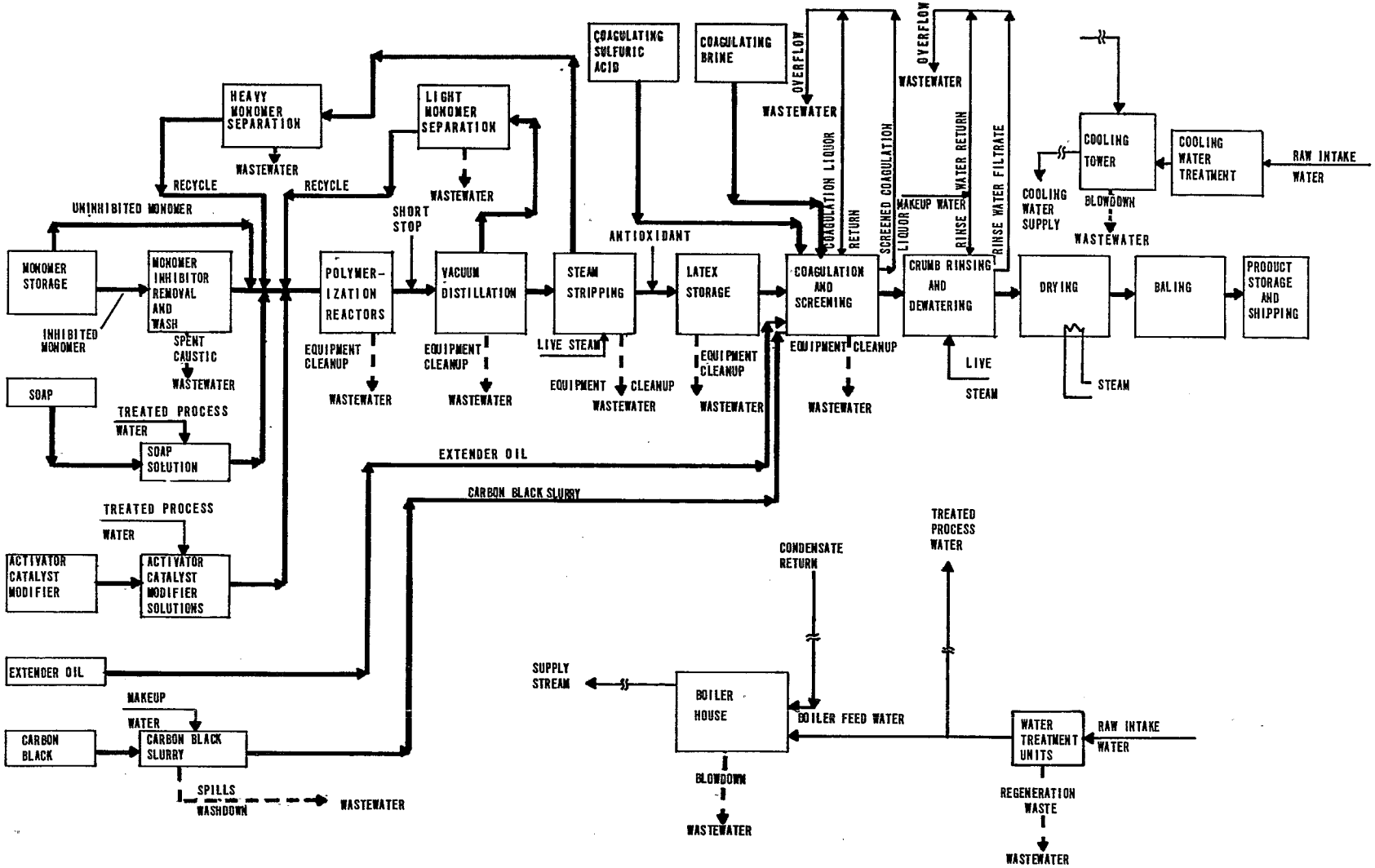

dition, each reactor has its own set of cooling coils, usually containing ammonia refrigerant, and is agitated by a mixer. The residence time in each reactor is approximately one hour. Any reactor in the train can be by-passed. The reactor system contributes significantly to the high degree of flexibility of the overall plant in producing different grades of rubber. The overall polymerization reaction is ordinarily carried to no greater than 60 percent conversion of monomer to rubber since the rate of reaction falls off beyond this point and product quality begins to deteriorate. The product rubber is formed in the emulsion phase of the reaction mixture. The reaction mixture is a milky white emulsion called latex.

Short stop solution is added to the latex leaving the reactors to stop the polymerization at the desired conversion. Two common short stop ingredient are sodium dimethyl dithiocarbamate and hydroquinone. The "stopped" latex is held in blowdown tanks prior to the stripping operation. The blowdown tanks act as flow regulating holding tanks.

Recovery of the unreacted monomers and their purification is an essential step in economic synthetic rubber production. Butadiene, which has a lower boiling point than styrene, is first vacuum stripped from the latex. The stripping operation is generally carried out in a vacuum flash tank at about 80-90°F. The butadiene vapors are compressed and condensed before entering a receiver. A very small quantity of water collects in the receiver and is discharged periodically. The condensed butadiene is recycled to the feed area and mixed with fresh monomer prior to the polymerization step. Styrene recovery from the latex usually takes place in perforated plate stripping columns. These operate with steam injection at approximately 140°F. The steam-styrene vapor mixture is condensed and sent to a receiver where the styrene and water are decanted. The top styrene layer is recycled to the monomer feed stage; the bottom layer of the receiver, which is styrene-laden water, is discharged. Both the vacuum and steam strippers foul periodically with rubber solids. These must be removed by hand, followed with both steam or water jets. This cleaning operation puts the stripper out of commission and produces large quantities of waste water.

An antioxidant to protect the rubber from attack by oxygen and ozone is added to the stripped latex in a blend tank. The latex is now stabilized and, as a result, different batches, recipes, or dilutions can be mixed. These mixing operations take place in the blend tanks. The latex is pumped from the blend tank to the coagulation step where dilute (pH 4-4.5) sulfuric acid and sodium chloride solution are added. The acid brine mixture is called the coagulation liquor and causes the rubber to precipitate from the latex. Theoretically, precipitation will occur with a coagulation liquor consisting of any combination of electrolyte and dilute acid. However, the quality and intended end use of the rubber limit the choice of coagulants. For example, some types of "hot" SBR which are used as insulation covering on electrical wire are coagulated with an acid-polyamine solution in order to produce a rubber with low electrical conductivity.

As mentioned earlier, rubber can be extended to improve its properties by using oils and carbon black. Carbon black and oil can be added to the latex during the coagulation step to produce a more intimate mixture than can be obtained by the subsequent addition of these materials to the crumb rubber as is the case with conventional rubber compounding. Wastewaters generated subsequent to the masterbatch operation (addition of carbon black) are usually black due to colloidal carbon black particles. The oil is added as an aqueous emulsion, and carbon black is blended into the latex as an aqueous slurry (approximately 5 percent by weight). There are various types of extending oils; some are staining and others non-staining Rubber extended with non-staining oil will not mark surfaces and is required for some non-tire uses. If a non-stained rubber is to be produced, not only must the extender oil be non-staining, but also lighter-colored soaps, short stops, and antioxidants must be used.

The coagulated crumb is separated from the coagulation liquor on a shaker screen. The coagulation liquor is recycled after make-up with fresh acid and brine and blowdown of part of the diluted liquor. The screened crumb is resuspended and washed with water in a reslurry tank. This operation serves to remove extraneous compounds from the rubber, particularly residual coagulation liquor. The crumb rubber slurry is then dewatered, generally using a vacuum filter, and the filtrate wash water is recycled to the reslurry tank for reuse with fresh water makeup and as an overflow. The overflow is necessary to blowdown accummulating rubber solids and contaminants. The coagulation liquor blowdown and crumb slurry water overflows are usually passed through separators. These facilities, called crumb pits, are generally outside the processing building and trap the floatable crumb rubber. The clarified underflow is discharged to the main treatment facility.

The rinsed and filtered rubber crumb is finally dried with hot air in a continuous belt or screen dryer. After drying, the rubber is weighed and pressed in bales and stored prior to shipment. Normally rubber bales weigh 75 pounds and are wrapped in polyethylene film. The balers are operated hydraulically with oil or water as the hydraulic fluid. Due to the jarring baling action and the high hydraulic pressures, fluid leaks are frequent and, in the case of oil-driven balers, the leaked oil should be prevented from entering the plant drain system.

In addition to the processing operations described above, other operations are carried out regularly, though not necessarily continuously, which generate considerable quantities of waste water. These include equipment cleanout and area washdown operations. Principal equipment cleanouts include the polymerization reactors, blowdown tanks, butadiene flash tanks, styrene stripping columns, and latex blend tanks. In most cases, high volumes of waste water are produced that are laden with uncoagulated latex solids and are characterized by a milky white appearance. When the flash tanks and stripping columns are cleaned, the waste waters contain rubber solids, due to premature coagulation of the latex, in addition to uncoagulated latex. Area washdowns are frequent, and the wash waters pick up primarily latex, rubber solids, and oil. The carbon black slurrying area is generally contaminated with carbon

powder. Area washdowns and storm run off typically pick up the carbon, resulting in a fine carbon suspension.

It is opportune at this point to review the potential waste water sources in a typical emulsion plant. Table 5 summarizes the principal wastewaters and the nature or appearance of their constituents.

Solution Crumb Production

As pointed out earlier, solution polymerization is a newer, less traditional process for the commercial production of crumb rubber in the U.S. Solution polymerization systems permit the use of stereospecific catalysts of the Ziegler-Natta or alkyl-lithium types which have made it possible to polymerize monomers, such as isoprene or butadiene, in a suitable organic solvent so as to obtain the cis structure (up to 98 percent) characteristic of the natural rubber molecule and with a high degree of regularity. Rubbers with the cis structure are desired since they are usually rubbery, whereas the trans-configuration is more rigid and similar to plastics. Cis-polybutadiene, for example, has higher abrasion resistance than the usual SBR type and is being used mainly to extend and partially replace both SBR and natural rubber in tires. Reports indicate that tread wear is improved by up to 35 percent in a 50-50 blend of polybutadiene and SBR.

A relative newcomer on the rubber scene is based on the cheap monomers, ethylene and propylene. Although not stereo-regular, these polymers can be produced in solution plants and can use similar catalysts. The polymer chain, based on ethylene and propylene, does not contain sufficient unsaturation for conventional curing. The incorporation of a third monomer, usually a diene (thus EPDM - ethylene propylene diene monomer), adds unsaturation and facilitates conventional curing.

The production of synthetic rubbers by solution polymerization processes is a stepwise operation, and, in many aspects, is very similar to production by emulsion polymerization. There are distinct differences in the two technologies, however. For solution polymerization, the monomers must be extremely pure and the solvent (hexane, for example) should be completely anhydrous. In contrast to emulsion polymerization, where the monomer conversion is taken to approximately 60 percent, solution polymerization systems are polymerized to conversion levels which are typically in excess of 90 percent. The polymerization reaction is also more rapid, usually complete in one to two hours.

Figure 4 is a generalized materials flow diagram for the production of crumb SBR by a solution polymerization process. The processing steps shown are essentially typical of all solution polymerization processes. As in the case with emulsion plants, solution plants comprise several processing lines where different types of rubber for distinct end uses can be produced (including non-extended, oil-extended, and carbon black master batch varieties). Plant operation is typically 24 hours per day, 365 days per year.

Table 5

Summary of Potential Process-Associated Wastewater Sources from Crumb Rubber Production via Emulsion Polymerization Processing

Processing Unit	Source	Nature of Wastewater Contaminants
Caustic Soda Scrubber	Spent caustic solution	High pH, alkalinity, and color. Extremely low average flow rate.
Monomer Recovery	Decant water layer	Dissolved and separable organics.
Coagulation	Coagulation liquor overflow	Acidity, dissolved organics, suspended and high dissolved solids, and color.
Crumb Dewatering	Crumb rinse water overflow	Dissolved organics, and suspended and dissolved solids.
Monomer Strippers	Stripper cleanout rinse water	Dissolved organics, and high suspended and dissolved solids. High quantities of uncoagulated latex.
Tanks and Reactors	Cleanout rinse water	Dissolved organics, and suspended and dissolved solids. High quantities of uncoagulated latex.
All Plant Areas	Area washdowns	Dissolved and separable organics, and suspended and dissolved solids.

FIGURE 4

GENERAL WATER FLOW DIAGRAM FOR A SOLUTION POLYMERIZED CRUMB RUBBER PRODUCTION FACILITY

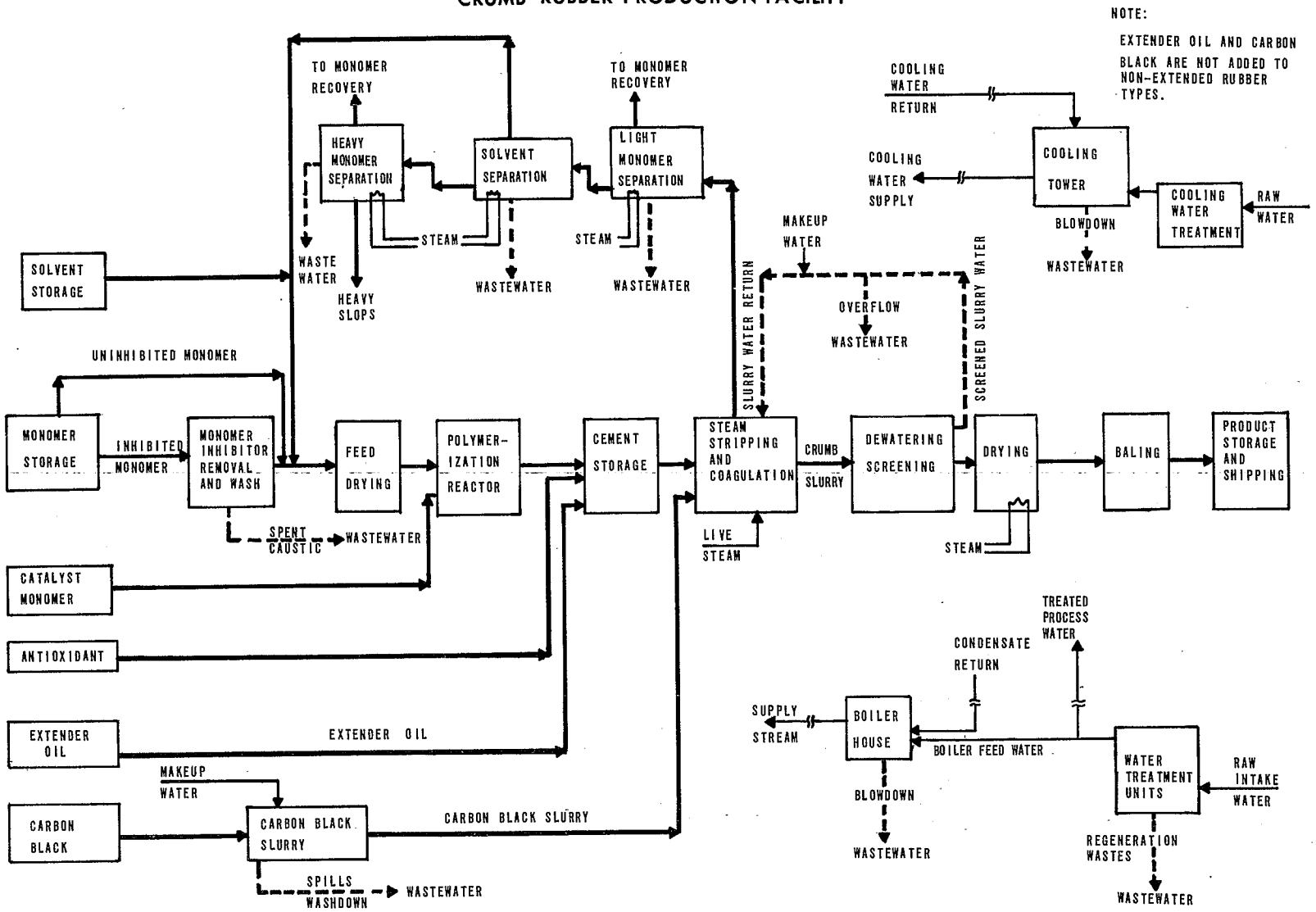

The fresh monomers are pumped to the plant from the tank farm. Inhibited monomers are passed through a caustic soda scrubber to remove the inhibitor. The monomers are then sent to fractionator drying towers where extraneous water is removed. Fresh and recycled solvent (for example,

hexane) is also passed through a drying column to remove water and extraneous light and heavy components. The light- and heavy-components build up in the system as unwanted by-products or unrecovered monomer during the polymerization step and must be removed. The purified solvent and monomers are then blended. The mixture is generally termed the "mixed feed". The mixed feed can be further dried to remove final traces of water using a desiccant column.

The dried mixed feed is now ready for the polymerization step and catalysts can be added to the solution (solvent plus monomers). The catalyst systems used vary. Typically they are titanium halide plus aluminum alkyl combinations or butyllithium compounds. The catalysts can be added to the mixed feed just prior to the polymerization stage or to the lead polymerization reactor.

The blend of solution and catalysts is polymerized in a series of reactors. The reaction is highly exothermic and heat is removed continuously by either an ammonia refrigerant or by chilled brine or glycol solutions. The reactors are similar in both design and operation to those used in emulsion polymerization. The mixture leaves the reactor train as a rubber cement, i.e., polymeric rubber solids dissolved in solvent.

A short stop solution is added to the cement after the desired conversion is reached. The stabilized cement is pumped to cement storage tanks prior to subsequent processing. At this point other ingredients, such as antioxidants, can be added. If the rubber is to be oil extended, oil can be added to the cement. The oil is usually blended with the cement at some point between the storage tanks and the steam stripping operation.

The rubber cement is pumped from the storage tank to the coagulator where the rubber is precipitated into crumb form with hot water under violent agitation. Wetting agents (surfactants) can be added to promote the control of crumb size and to prevent reagglomeration. In addition to coagulation, much of the solvent and unreacted monomer are stripped overhead. For carbon black masterbatch rubbers, the carbon black slurry is added to the coagulator in much the same manner as for emulsion crumb rubber.

The resultant crumb slurry passes to a series of strippers where steam stripping drives off the remaining monomers and solvent. The strippers are generally a flash tank or agitated kettle strippers. The steam, solvent, and monomer vapors are condensed and sent to a decant system. The bottom decant layer, saturated in monomers and solvent, is discharged. The organic layer is sent to a multi-stage fractionator (described earlier). Light fractions are removed in the first column

and generally consist of unreacted light monomer (for example, butadiene). This is normally reclaimed at the monomer supply plant. The second column produces purified solvent, a heavy monomer-water fraction, and extraneous heavy components.

The heavy monomer (for example, styrene) is condensed, decanted, and recycled. The bottom water layer is discharged. The purified solvent is dried and reused. The heavy extraneous component stream is a waste which can either be decanted before disposal or can be incinerated as a slop oil.

The stripped crumb slurry is separated and further washed with water on vibrating screens. The slurry rinse water is recycled in part to the coagulation stage with water or steam makeup. The remaining portion of the slurry rinse water overflows and is discharged. This water contains floating crumb rubber fines and is generally passed through a crumb pit before discharge. The crumb fines are trapped in the pit. The screened rubber is passed through an extruder-dryer for further dewatering and drying. Dewatering and drying can also be carried out with a rotary filter and hot air oven dryer. The dried rubber is pressed into 75-pound bales and is usually wrapped in polyethylene for shipment. Balers, identical to those employed in emulsion processing, are used in solutionpolymerized rubber production. Oil leaks are a potential problem.

In addition to the processing operations described above, area washdowns occur. These are frequent and produce large volumes of waste water which can be contaminated with dissolved organics, floating organics, oils, and suspended solids. Since the majority of the processing steps are operated on a strict water-free basis, there is little need for equipment cleanout operations with water. The processing units which are kept free of water are cleaned out with solvent when necessary. This cleaning solvent is stored separately and is used solely for the cleanout operation. Process pumps, handling in particular the dried mixed feed prior to and during the polymerization stage, use a non-aqueous fluid (usually an oil) as a seal in lieu of water to prevent contamination of the process streams with water. Leaking fluid is a potential source of oil which can be picked up by area washdown waters. The carbon black slurrying area is a source of waste waters laden with carbon fines.

The main waste water sources in a typical solution polymerization plant are summarized in Table 6.

Latex Production

In addition to solid crumb rubber, emulsion polymerization is also used to produce latex rubber. Latex production follows the same processing steps as emulsion crumb production with the exception of latex coagulation and crumb rinsing, drying, and baling. Only about 5 to 10 percent of SBR is used as latex, but approximately 30 percent of the nitrile rubbers (NBR) enter the market as latex. Commercially available SBR latexes contain about 45- to 55-percent solids, although some can be

Table 6

Summary of Potential Process-Associated Wastewater Sources from Crumb Rubber Production via Solution Polymerization Processing

Processing Unit	Source	Nature of Wastewater Contaminants
Caustic Soda Scrubber	Spent caustic solution	High pH, alkalinity, and color. Extremely low average flow rate
Solvent Purification	Fractionator bottoms	Dissolved and separable organics.
Monomer Recovery	Decant water layer	Dissolved and separable organics.
Crumb Dewatering	Crumb rinse water overflow	Dissolved organics, and suspended and dissolved solids.
All Plant Areas	Area washdowns	Dissolved and separable organics, and suspended and dissolved solids.

as high as 68 percent. Most NBR latexes are in the 45- to 55-percent solids class. The polymerizations are taken essentially to completion (about 98 to 99 percent conversion) as opposed to emulsion crumb rubber production where conversion per polymerization pass is approximately 60 percent.

As a result, the recovery of unused monomer is not economical. Process economics are directed towards maximum conversion on a once-through basis.

Figure 5 is a generalized materials flow diagram for the production of latex SBR by emulsion polymerization. The steps shown are typical of all latex production processes. Although latex plants are generally operated 24 hours per day and 365 days per year, the production runs for each recipe or type of latex are shorter than in emulsion or solution crumb rubber plants because latex consumption is on a smaller scale and latex consumers are usually outside companies with varying product needs. By contrast, the majority of crumb rubber is made for tire manufacture, is consumed by major tire companies, and is produced by their own synthetic rubber producing divisions. This has the effect of limiting the number of types of product and recipe, rationalizing production schedules, and, in the final analysis, leading to long production runs. Latexes are used to manufacture dipped goods, paper coatings, paints, carpet backing, and many other commodities.

The monomers are piped from the tank farm to the processing plant. Monomer inhibitors are scrubbed out by using caustic soda solution. Soap solution, catalysts, and modifiers are added to the monomer to produce a feed emulsion prior to feeding to the reactors. The water used in the preparation of the above solutions is generally deionized city or well water. The number of reactors in the reactor train is usually smaller than that used for emulsion crumb production. The temperature is generally kept at approximately 40 to 45°F and, therefore, most latexes are made by the "cold" process. When the polymerization is complete, the latex is sent to a blowdown tank for intermediate storage or holding. Stabilizers are usually added to the latex at this point to stop the polymerization and to stabilize the latex.

The latex passes from the blowdown tanks to a vacuum stripper where the unreacted butadiene is removed. The butadiene is vented to the atmosphere. The vacuum is pulled with either a vacuum pump or steam jet. The excess styrene is stripped from the latex in a steam stripper. The steam and styrene are condensed and sent to a receiver. The bottom water layer is decanted off and discharged. The styrene layer is not recycled but can be containerized and sent to disposal.

The stripped latex is passed through a series of screen filters to remove unwanted large rubber solids. The latex is finally stored in blending tanks where various additives (for example, antioxidants) are

FIGURE 5

GENERAL WATER FLOW DIAGRAM FOR AN EMULSION LATEX RUBBER PRODUCTION FACILITY

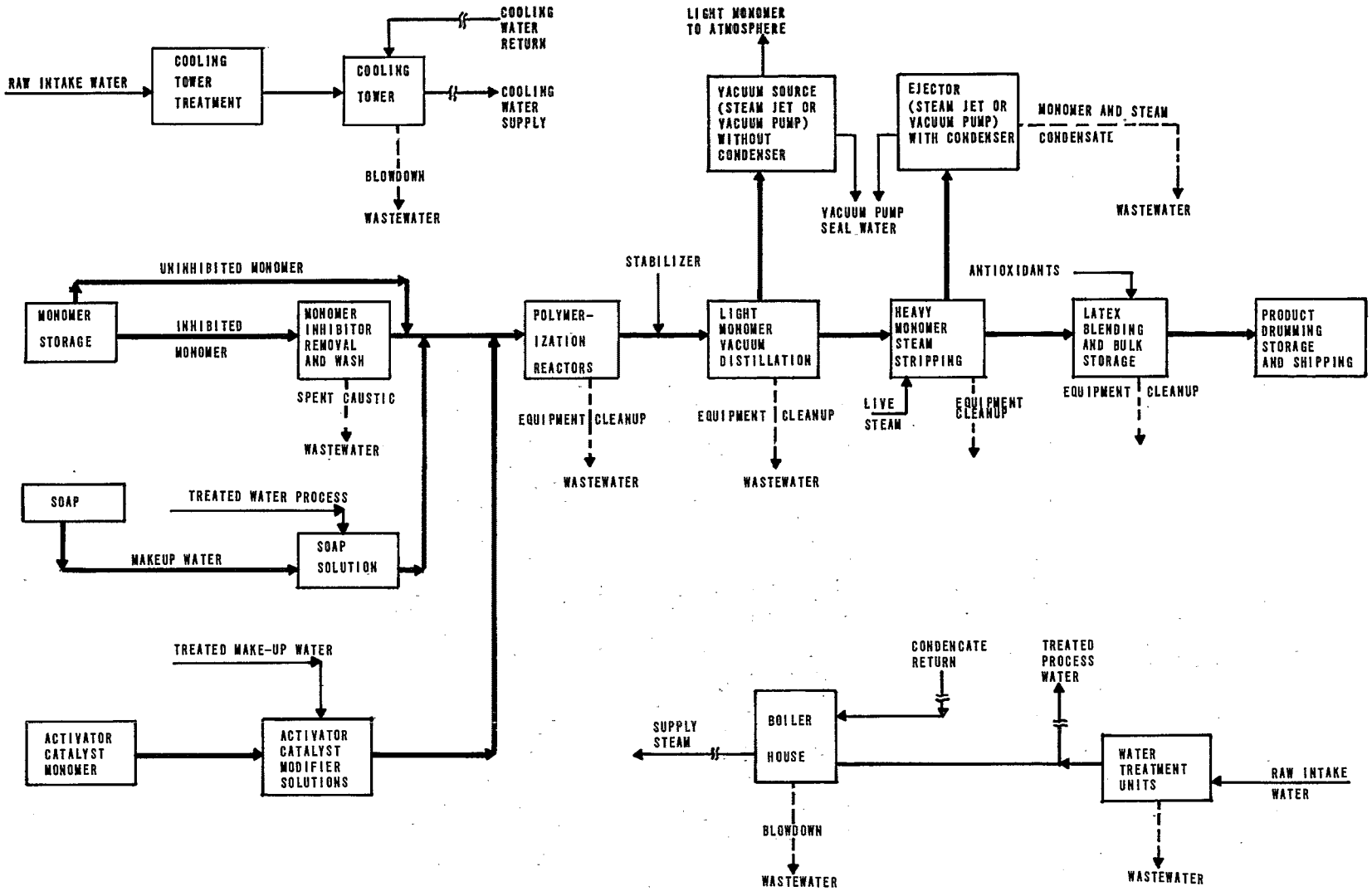

mixed with the latex. The latex is shipped from the blending tanks by tank car or tank truck, or is drummed ready for dispatch.

Since short production runs are common to the industry, the major wastewaters generated in a synthetic latex plant stem from equipment cleanout operations. When production is switched from one type of rubber to another, reactors, blowdown tanks, strippers, and filters require cleaning

for the new product. In addition, tank cars and tank trucks owned or leased by the plant require cleaning after each trip. Area washdowns are frequent inside the processing buildings and at the vehicle loading-unloading areas. All the above waste waters will contain oils, dissolved organics, and high concentrations of latex solids.

Table 7 summarizes the origins and nature of the principal wastewater sources generated in a typical synthetic latex plant.

Summary

The growth of the tire and inner tube industry has been closely linked to the growth of the automobile industry. Current production is over 210 million tires per year with one quarter of this production destined for original equipment on new vehicles. The production of both tires and inner tubes consist of the compounding, extruding, calendering, and molding of solid raw materials. There is considerable heat generated by these processes and it must be dissipated and controlled to insure the quality of the final product. Water used in other than for utilities, consists of makeup water for soapstone solution and latex dip solutions.

The production capacity and output of the synthetic rubber industry are expanding steadily and are linked very closely to consumption by the tire industry. The relative production levels for the various types of synthetic rubber will not change significantly over the next several years to affect the operations or waste water impact of the industry as a whole. Two distinct processing technologies (emulsion and solution) exist. Process variations within each of these two technologies are only minor. Two different types of rubber product are manufactured: crumb and latex rubbers. The so-called specialty rubbers are manufactured by processes similar to those used to produce the so-called tire rubbers and are in similar product forms, i.e., solid and latex rubbers.

Table 7

Summary of Potential Process-Associated Wastewater Sources from Latex Production via Emulsion Polymerization Processing

Processing Unit	Source	Nature of Wastewater Contaminants
Caustic Soda Scrubber	Spent caustic solution	High pH, alkalinity, and color. Extremely low average flow rate.
Excess Monomer Stripping	Decant water layer	Dissolved and separable organics.
Tanks, Reactors, and Strippers	Cleanout rinse water	Dissolved organics, suspended and dissolved solids. High quantities of uncoagulated latex.
Tank Cars and Tank Trucks	Cleanout rinse water	Dissolved organics, suspended and dissolved solids. High quantities of uncoagulated latex.
All Plant Areas	Area washdowns	Dissolved and separable organics, and suspended and dissolved solids.

SECTION IV

INDUSTRY CATEGORIZATION

Introduction

Industry categories and subcategories were established so as to define those sectors of the rubber industry where separate effluent limitations and standards should apply. In the final analysis, the underlying distinctions between the various categories and subcategories have been based on the waste water generated, its quantity, characteristics, and applicability of control and treatment. The factors considered in determining whether such categorizations are justified were the following:

1. Manufacturing Process.
2. Product.
3. Raw Materials.
4. Plant Size.
5. Plant Age.
6. Plant Location.
7. Air Pollution Control Equipment.
8. Nature of Wastes Generated.
9. Treatability of Wastewaters.

As indicated in Section III, there are inherent differences between the tire and inner tube sector, and the synthetic rubber sector of the rubber industry; therefore, the two have been separated to produce the two principal industry categorizations.

Tire and Inner Tube Industry

Manufacturing Process

The process steps by which tires are made are similar throughout the industry. Although there are variations due to equipment manufacturer and automation, these differences do not lead to significant variations in the volume or constituents of process waters.

Product

Examination of existing plants indicates that the end product is not a reasonable basis for categorization. Manufacturing steps for all tire production are similar; inner tube manufacture, although different in some respects, generates the same type of process waste water streams as does the tire production. The characteristics of the waste stream and the potential treatment technologies are not significantly different.

Radial tire manufacture is different in the building, molding, and curing operations; however, these differences do not significantly impact on waste water quantity or quality. In addition, radial tires are generally produced in the same plants as bias tires.

Raw Materials

Since the basic raw materials for the entire industry are rubber, carbon black and oil, categorization based on raw material usage is not reasonable. The quantities and form of the different raw materials received varies, but these do not significantly affect the control or treatment technologies applicable to the industry. The handling of raw materials, particularly the carbon black, also varies within the industry. However, this again does not affect the process waste waters or their treatability.

Plant Size

A listing of most plants currently operating and their production rates is given in Table 8. The distribution of these is presented in Figure 6. From inspection of existing and plant visit data, it was learned that plant size has not significant effect on the quality or treatability of waste waters. Process effluent quantities varied significantly but was not directly related to plant size. The only significance of size is the cost of treatment of waste water streams, which, of course, is related to other factors.

Plant Age

The age of plants currently in operation will fall into three basic categories depending on the expansion period in which the plant was built. The oldest plant in operation is an inner tube facility built in 1888.

As constructed, production facilities built during the first two expansion periods tend to be multi-storied, with process lines located on many floors and confined to small areas. In addition, plants from the first expansion period most probably have undergone modifications in order to update their machine processing technology (for example, the installation of internal mixers). Most likely this would further congest the processing area. Much of the equipment in these older plants is old and of designs that have since been updated to reduce maintenance and operational costs. Process, nonprocess, and domestic wastewater sewers exist as a combined sewer, thus making process contaminants difficult to locate or treat once thy reach the drainage system. Engineering diagrams of sewers within the plant are dated and possibly nonexistent. Drains that do exist were located for ease of washdown of contaminants, thus making their position inappropriate by current thinking and standards.

The newer plants of the last expansion period have the benefit of modern design criteria and updated thinking in both the sanitary and maintenance engineering fields. Buildings are single-story and contain more area per process line. Equipment and area locations have been designed for a cleaner, more maintenance-free operation. Sewers are no longer combined, thus making process sewer waste waters easier to locate and treat. Drains are not located in areas where contaminants can gain easy entrance.

Table 8

Major Tire Production Facilities in the United States

Company	Location	Approximate Construction Data	Units/day
Armstrong	Des Moines, IA	1944	20,000
	Hanford, CA	1961	10,000
	Natches, MI	1938	14,600
	W. Haven, CN	1920	13,500
Carlisle	Carlisle, PA	----	------
Cooper	Findley, Ohio	1945	13,000
	Texarkana, TX	----	11,500
Corduroy	Grand Rapids, MI	----	------
Denman	Warren, Ohio	----	------
Dunlop	Buffalo, NY	1920	------
Firestone	Akron, Ohio	1911	27,000
	Albany, GA	1968	17,000
	Barberton, Ohio	1921	8,500
	Bloomington, Ill	1965	50
	Dayton, Ohio	1945	20,700
	Decatur, Ill	1963	22,000
	DesMoines, IA	1945	22,000
	Los Angeles, CA	----	15,500
	Memphis, TE	----	28,000
	Pottstown, PA	1947	30,000
	Salinas, CA	----	15,500
Gates	Denver, CO	1959	18,200
	Nashville, TE	----	10,000
General	Akron, Ohio	1945	9,050
	Bryan, Ohio	----	30
	Charlotte, NC	1967	12,000
	Mayfield, KY	1960	23,000
	Waco, TX q	1945	16,000
Goodrich	Akron, Ohio	-----	6,000
	Ft. Wayne, Ind	-----	18,000
	Los Angeles, CA	1928	11,500
	Oaks, PA	1937	9,000
	Tuscaloosa, AL	1945	21,000
Goodyear	Akron, Ohio	----	38,000
	Conshohocken PA	----	13,000
	Cumberland, MD	1921	20,500
	Danville, VA	1966	4,100
	Freeport, Ill	1963	14,000
	Gadsden, AL	----	44,000
	Jackson, MI	1937	30,000
	Los Angeles, CA	1927	14,700
	Topeka, KA	1945	30,000
	Tyler, TX	----	15,000
	Union City, TE	1968	30,000
Mansfield	Mansfield, Ohio	1946	14,000
	Tupelo, MI	1959	12,500
McCreary	Indiana, PA	1951	3,500
Mohawk	Akron, Ohio	----	6,000
	Salem, W. VA	----	4,700
	W. Helena, Ark.	1956	10,000
Schenuit	Baltimore, MD	----	------
Uniroyal	Chicopee Falls, MA	1965	29,000
	Detroit, MI	1906	39,745
	Eau Claire, Wis.	1844	30,000
	Los Angeles, CA	1931	16,500
	Opelika, AL	1964	13,500

Source: "Rubber Reuse and Solid Waste Management," U. S. Environmental Protection Agency, 1971.

By the above reasoning, the process waste water streams from older plants should be larger in volume and should contain higher loadings of both oily and solid materials. Control and treatment should be more difficult. Examination of plant waste water streams from all these areas bears this out.

The years between 1950 and 1960 are the transition period between the second and third expansion period. Plants constructed in the early 1950's were built during the Korean War and will most likely have the same problems as those built in the World War II era. Few (if any) plants were built after the Korean War until 1959, when the current expansion began. The year 1959, therefore, is the demarcation point between old and new facilities for purposes of economic analysis.

Plant Location

From inspection and waste water sampling of plants located in three geographical areas of the country and from analysis of existing data, plant location will have no effect on the quality or quantity of the process waste water streams. These geographical areas included the South, the Far West, and the Northern Midwest. Geographical location has a significant effect on the supply of water; therefore, management of nonprocess streams such as cooling water and steam varied from region to region. Recirculation of cooling water is very common in the Far West (where water supplies are short), whereas it is less common in other sections of the country. Reduction of nonprocess waste waters by recycle increases the treatability of process waste waters when combined with nonprocess waste waters in an end-of-pipe treatment facility. Treatability of process waste water streams, however, is more effectively carried out before combination with nonprocess streams. In addition, geography does not limit the use of recirculated water to the Far West. Plants in other parts of the country are also using recycle, though not necessarily for the same reasons. Therefore, location is not a reasonable basis for subcategorization.

Air Pollution Control Equipment

The type of air pollution equipment employed by a facility can have a great effect on the characteristics and treatability of the process waste water streams. The use of dry equipment or the recycling of discharges from wet equipment was observed in all areas of the plant which are currently served by such devices. Therefore, since company policy (rather than the situation to be controlled) dictates the type of equipment used, air pollution equipment does not form a suitable basis for categorization.

Nature of Wastes Generated

From evaluation of all available data, the type of wastes generated by all facilities in the tire and inner tube industry are similar. The addition or subtraction of the latex dipping of fabric from the process line can affect the characteristics of the process waste waters.

However, as supported by existing data, this discharge is not large and can be easily contained. Therefore, it does not necessarily affect the treatability of process waste waters and does not form a basis for categorization.

Treatability of Wastewaters

The treatment technologies employed by companies throughout the industry are similar. Wastewater constituents are also very similar: mainly oil and solids. Treatability is more a factor of specific plant layout than of the specific pollutant and, therefore, does not form a basis for categorization.

Summary

For the purpose of establishing effluent limitations, only one subcategory is necessary for the tire and inner tube industry. The age of tire and inner tube plants, however, must be considered during the analysis of the costs to implement the control technologies upon which the limitations are based. The difference in cost for old and new plants have been delineated in Section VIII.

As indicated, tire manufacturing facilities built in earlier periods, although using similar manufacturing techniques, often have greater waste water problems than do new plants. Plants built prior to 1959 are considered old; those built during and after 1959 are considered new. Inner tube facilities, although producing a different product, incur the same difficulties and for the purpose of economic analysis should be grouped with the "old" tire plants.

In considering the economic impact on the industry, camelback operation, a small segment of the industry, should also be included in the "old" or "new" group of tire plants depending on the tire facility of which it is a part. Likewise, compounding operations, another small segment of the industry, should fall into the age group of the plants with which they coexist. If located by itself in a separate location, the compounding facility should be grouped with the "old" or "new" tire plants depending on its original date of operation.

Synthetic Rubber Industry

Manufacturing Process

As described in Section III of this document, there are two basic processing techniques in common use in the industry to produce synthetic rubber: emulsion polymerization processing and solution polymerization processing.

Emulsion polymerization as a commercial process dates back to World War II. No significant changes have been made in the basic process since the first emulsion polymerization plants were built. Emulsion polymeri-

zation processing is used, however, to make both emulsion crumb and latex rubber. From both operational and waste water points of view, crumb and latex production techniques should be considered separately.

Solution polymerization production facilities are different from emulsion plants from both process and waste water points of view and have been considered as a separate subcategory. Differences among solution rubber production plants are minor. All solution plants consist of feed preparation, polymerization, solvent and monomer recovery, coagulation, and rubber finishing operations. The operations that have the greatest waste water impact in solution plants are those operations which are most similar plant to plant.

It was therefore concluded that there are essentially three manufacturing process variations which merit separate subcategories: emulsion polymerization to crumb rubber; solution polymerization to crumb rubber; and emulsion polymerization to latex.

Product

There are two principal product subcategories in the synthetic rubber industry, crumb and latex product.

Within the crumb subcategory there are several product variations which involved the type of rubber (styrene-butadiene, or polybutadiene, etc.) and whether the rubber is extended or not. The two principal products made by emulsion polymerization are SBR and nitrile rubber. The process operations for the two rubbers are identical, and the same or similar equipment is used. Several types of rubber are produced by solution polymerization processes; in many cases similar solvents and monomers are used, equivalent processing operations are carried out, and identical processing equipment is used.

The processing variations involved in the manufacture of either oil-extended or carbon-black-extended rubber are minor. In addition, the oil and carbon black are very effectively tied up with the rubber, thus reducing the potential for waste water impact.

The effects that the various types of latex rubber (for example, SBR and NBR) have on the production operations and waste waters are minor. The same equipment and processes are used for all types.

As pointed out in Section III, the specialty rubbers are essentially similar to the tire rubbers from a processing point of view, and no separate categorization is deemed necessary.

It has been concluded that only two principal product subcategories are required to adequately define the synthetic rubber industry. They are crumb and latex rubber.

Raw Materials

The monomeric raw materials used to produce the various types of synthetic have similar properties. They are usually unsaturated hydrocarbons with extremely low solubility in water. Chloroprene, a chlorinated hydrocarbon used to make neoprene rubber, is also insoluble in water. In addition to low solubility, most of the monomers used have high volatility and, consequently, a monomer floating on waste water soon evaporates. Most solvents used also have low solubility and high volatility and do not remain in a waste water. The catalysts, modifiers, antioxidants, etc. used in polymerizations are generally similar and are used in such low concentrations that their effect on waste water is minimal. Their presence is generally undetectable in the waste waters.

In conclusion, there is no need for a subcategorization based on the raw materials used.

Plant Size

Most emulsion and solution crumb rubber plants consist of several parallel and integral processing lines. Each of these lines tends to be of similar size. The waste waters generated by a plant, therefore, are normally directly proportional to the production capacity.

Small production facilities (for example, latex plants), will bear a somewhat higher treatment cost than larger plants. However, these plants are generally part of a larger synthetic rubber or organic chemical complex, and the treatment cost can be shared. In any case, latex plants are considered as a separate subcategory.

For these reasons, sub-categorization according to plant size is not necessary.

Plant Age

Many emulsion plants (crumb and latex rubber) were built during or shortly after World War II. Few have been built since. In addition, technology has not changed appreciably since that time.

Solution plants are generally newer, but all have been built in the last 13 years. The technology has not changed radically during that time period.

It has been concluded that plant age is not a significant factor for separate subcategorization.

Plant Location

Most of the larger synthetic rubber plants are located in one geographic region. (Refer to Figure 6.) This fact is closely connected to the availability of the monomeric raw materials. The location of the plants does not influence the processing operation. However, geographic location can influence the performance of aerated lagoons and stabilization ponds. Comparable secondary waste water treatment alter-

FIGURE 6

LOCATION OF TIRE MANUFACTURING PLANTS, PRODUCTION GREATER THAN 20,000 UNITS/DAY, AND SYNTHETIC RUBBER PRODUCTION PLANTS, PRODUCTION GREATER THAN 60,000 LONG TONS/YEAR, WITHIN THE U. S. 1972.

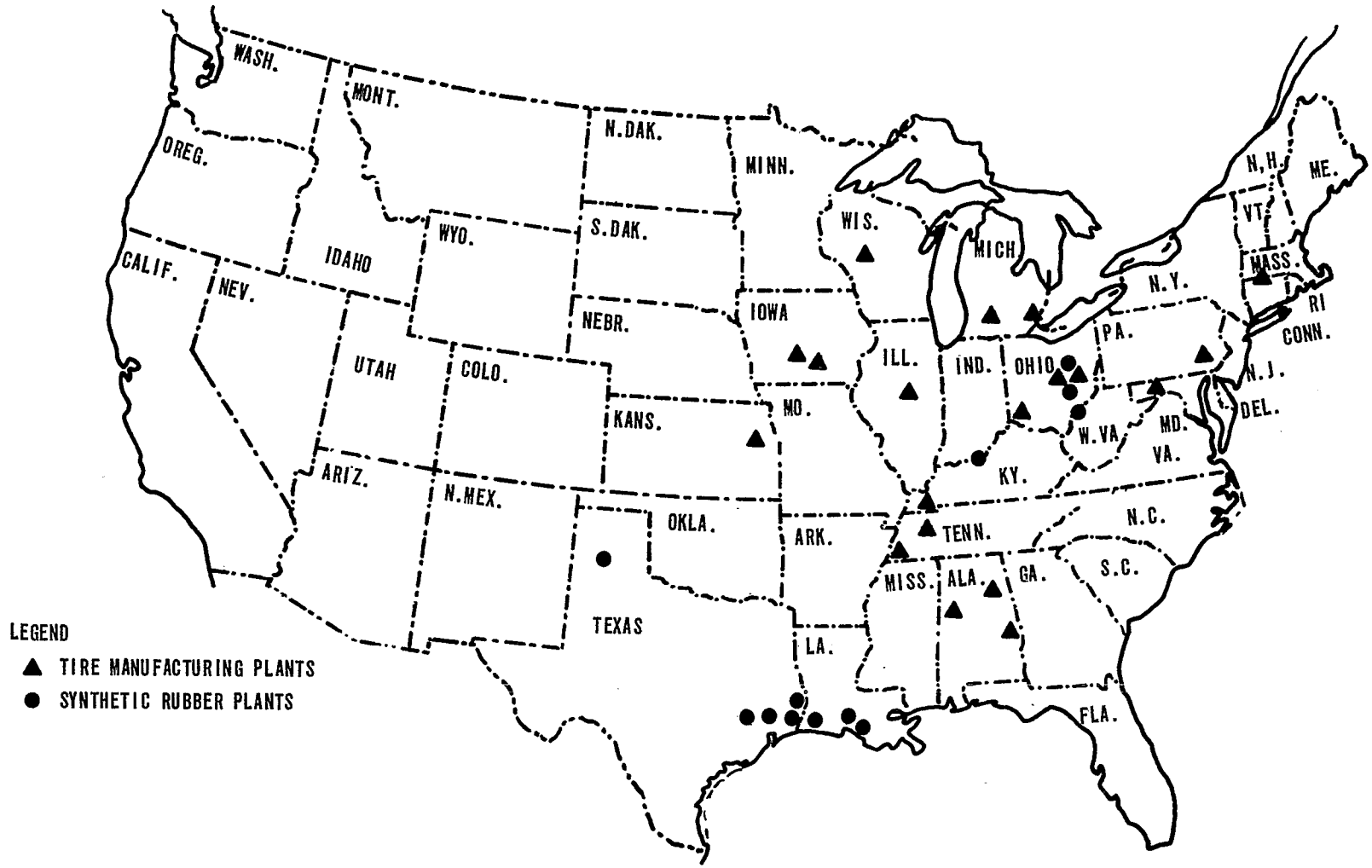

natives, such as activated sludge, do exist, but the performance is not dependent on geographic location. It is not necessary to subcategorize the synethtic rubber industry by plant location.

Air Pollution Control Equipment

Generally, air pollution control devices are not required by the industry. Odor problems do exist at some plants, but these are controlled by devices which are either dry or which do not impact on the wastewaters of the plant.

Air pollution control is not a subject for subcategorization of the synthetic rubber industry.

Nature of Wastes Generated

The differences in the characteristics of waste waters generated by production of non-extended, oil-extended, and carbon-black-extended emulsion crumb rubber were not discernible. Similarly, the waste water characteristics produced by non-extended, oil-extended, and carbonblack-extended solution crumb plants were essentially identical; however, waste waters from emulsion crumb, solution crumb, and latex rubber production facilities were significantly different to warrant subcategorization.

These facts indicate the separate subcategories are required only for emulsion crumb, solution crumb, and latex rubber production.

Treatability of Wastewaters

Since the waste waters generated by emulsion crumb and latex production require chemical coagulation prior to primary clarification whereas the waste waters produced by solution crumb plants do not, there is a difference in the treatability of synthetic rubber wastes. In addition, the COD and BOD loading from latex plants is considerably higher than from emulsion and solution crumb plants, and requires more extensive treatment.

It was concluded that, based on the treatability of the waste waters, three subcategories were required: emulsion crumb, solution crumb, and latex rubber production.

Summary

For the purpose of establishing effluent limitations guidelines and standards, the synthetic rubber industry should be separated into three subcategories which are based on distinct processing and product differences. These subcategories are:

1. Emulsion crumb rubber.
2. Solution crumb rubber.
3. Latex rubber.

SECTION V

WASTE CHARACTERIZATION

Tire and Inner Tube Industry

A general process flow diagram for a typical tire production facility is presented in Figure 1. Figure 2 presents a typical inner tube production process diagram.

The primary water usage in a tire and inner tube facility is for non-contact cooling and heating. Discharges from service utilities supplying cooling water and steam are the major source of contaminants in the final effluent. Characteristics of these waste waters are COD, BOD, suspended solids, and dissolved solids.

Table 9 presents the raw waste loading for the combined process and recirculating cooling water. nonprocess waste waters of the plants visited. Flow variations are due mainly to the use of once-through cooling water in certain plants as opposed to recirculated cooling water in others. In order to adequately estimate the waste water discharge flow rates, the plant effluent was divided into process waste waters and nonprocess waste waters. The process waste waters consist of mill area oily waters, soapstone slurry and latex dip wastes, area washdown waters, emission scrubber waters, contaminated storm waters from raw material storage areas, etc. The nonprocess waste waters are sanitary and clean storm waters, utility waste waters such as once through cooling water, boiler blowdown, cooling tower blowdown, water treatment wastes and uncontaminated contact cooling water like tread cooling waters. Plants A and B are new plants using totally recirculated cooling water. Plants E and G are old facilities also using recirculated water. A comparison of these four plants indicates that no significant variations in flow exist due to age of the plant.

Plant F typifies a plant using once-through water as its primary source of process cooling. COD and BOD loadings vary to a great degree by the type and amount of chemicals used in the treatment of boiler and cooling tower makeup waters. Larger loadings for older plants indicate an increased amount of process waste water pollutants in the effluent. Loadings measured in Plant A are high due to the practice of discharging washdowns of soapstone and latex dip areas noticed during the sampling period. This plant uses holding lagoons. Because all wastes are contained within the plant's boundaries, Plant A discharges contaminants which other exemplary plants (using different technologies) can not accomplish. These contaminants lead to a correspondingly higher loading.

Suspended solid loadings evolve primarily due to water treatment blowdowns, wastes, and boiler blowdowns. In addition, the suspended solid loadings in process waste water can increase due to spills, leakage, and soapstone discharge. Loadings for old plants tend to be higher than those for new plants. This is due in part to the use of

TABLE 9

Raw Waste loads of total Effluent From Tire and Inner Tube Facilities[1]

Plant	Category	FLOW L/kkg (gal/1000lb) of raw material	COD kg/kkg (lb/1000lb) of raw material	BOD kg/kkg (lb/1000lb) of raw material	SS kg/kkg (lb/1000lb) of raw material	TDS kg/kkg (lb/1000lb) of raw material	OIL kg/kkg (lb/1000lb) of raw material
A	New	6344 (762)	1.890	0.067	0.960	4.800	0.248
B	New	3430 (412)	0.184	0.002	0.047	0.159	0.075
C[2]	New	8251 (991)	NA	NA	1.155	NA	0.794
D	New	10883 (1,306)	0.142	0.012	0.092	0.879	0.009
E	Old	5453 (655)	0.100	0.001	0.440	0.001	0.027[3]
F	Old	123480 (14,824)	3.398	0.296	1.358	0.001	0.650
G	Old	3220 (387)	0.645	0.098	3.429	0.000	0.267
H	Old	72427 (8,695)	0.001	0.036	0.676	0.000	0.167
I	Old	10610 (1,274)	0.615	0.148	2.812	1.810	0.172

[1] Includes utility wastewaters.

[2] Estimated, raw material consumption not known.

[3] Includes treatment by in-plant sumps.

NA - Data not available

older water treatment techniques and the larger volumes of process waste water containing solids discharged by older facilities.

The quantity of dissolved solids discharged is related to the amount of recirculated nonprocess water and the water supply source. Plants using well water typically have higher dissolved solid loadings, than those using municipal or river water sources.

Table 9 also shows that the plant's final end product has no significant effect upon the raw waste loading in the final effluent. Data from Plant H, which produces primarily truck and industrial tires, is not substantially very different from Plants E, F, or G, which, while producing a combination of products, produce mainly passenger tires. Loadings from Plant I are similar to the others, even though this plant's primary product is the manufacture of inner tubes.

To substantiate the data and conclusions on total final effluent, Corps of Engineers water discharge permit applications were obtained for a large segment of the tire and inner tube industry. Comparison of Corps permits for plants considered old and new revealed that the above findings and conclusions are substantially correct. Table 10 lists the main characteristics and the loadings corresponding to a typical old and typical newer tire production facility.

Raw waste loads in the process waste waters leaving the production facility are presented in Table 11. Flow rates are estimates only, mainly due to the intermittent nature of the waste discharges. Although there appears to be no significant difference in the measured flow rates as shown by data, the composition of the flows originating from old and new plants differs greatly. New Plant A uses large amounts of washdown water which comprises the bulk of their process waste waters. New Plant B process waste waters consist largely of discharges from an extensive wet air pollution train. The discharges from this equipment are the primary constituent of the process waste waters. The process waste water flow rates leaving older plants are due to other factors such as spills, leakage, runoff from storage areas and inherent plant practices of older facilities. Therefore the data indicate that, given the same housekeeping policies and the same degree of wet air pollution equipment and controls, the process waste water flow rates from older plants will be higher than from newer plants.

Two important characteristics of the process waste waters are suspended solids and oil. The suspended solids are generally higher from older plants due to greater maintenance and poorer housekeeping and control practices. The same can be said for the oil. Suspended soilids evolve from the powdered substances used in the compounding area and from the collection of particulates by wet air pollution control equipment. The oil is primarily lubrication and hydraulic oils from in-plant sources, and extender and fuel oil from run-off in storage areas. Both parameters can be treated successfully. Plant B is using a sedimentation lagoon to settle solids collected in the compounding area from wet air pollution equipment. It has been demonstrated by Plants A and E that solids collected in other areas can be separated easily by

TABLE 10

Industry-Wide Average Values of Final Effluent Loads for Tire and Inner Tube Plants[1]

	FLOW - L/kkg. (gal./1000 lb.) of raw material	COD - kg/kkg (lb./1000 lb.) of raw material	SS - kg/kkg (lb./1000 lb.) of raw material	TDS - kg/kkg (lb./1000 lb.) of raw material	OIL - kg/kkg (lb./1000 lb.) of raw material
Old Tire Facilities (to 1958)					
Minimum	6,267 (752)	0.088	0.001	0.349	0.003
Maximum	386,478 (46,396)	7.294	5.854	105.660	3.363
Average	37,000 (4,442)	0.780	1.000	12.000	0.120
New Tire Facilities (1959 to Present)					
Minimum	2,303 (276)	0.083	0.032	0.387	0.011
Maximum	48,070 (5,771)	2.020	1.397	12.980	0.187
Average	10,500 (1,261)	0.580	0.310	5.535	0.042

[1] Includes utility wastewaters.

Source: Corp of Engineer Permit Applications

TABLE 11

Raw Waste Loads of Process Wastewaters from Tire and Inner Tube Facilities

Plant	Category	FLOW L/kkg (gal/1000lb) of raw material	COD kg/kkg (lb/1000lb) of raw material	BOD kg/kkg (lb/1000lb) of raw material	SS kg/kkg (lb/1000lb) of raw material	TDS kg/kkg (lb/1000lb) of raw material	OIL kg/kkg (lb/1000lb) of raw material
A	New	290 (35)	1.57	0.067	0.882	5.12	0.248
B	New	165 (198)	NA	0.001	0.013	0.3739	0.075
C[2]	New	NA	NA	NA	NA	NA	NA
D	New	NA	0.193	0.010	0.064	3.210	0.008
E	Old	110 (13)	0.046	0.000	0.017	0.019	0.027
F	Old	700 (84)	NA	NA	0.57	NA	0.650
G	Old	590 (71)	NA	NA	0.001	NA	0.260
H	Old	4300 (516)	2.199	0.356	0.520	19.765	0.163
I	Old	769 (92)	NA	NA	2.610	NA	0.172

[1] Estimated

[2] No data available from Plant C

NA - Data not available

conventional equipment. American Petroleum Institute (API) type separators are being used to treat oily waste effluents of Plants B, D, and E.

Synthetic Rubber Industry

General

Wastewater characterization data were obtained from literature, EPA documents, and company records. Plant visits (refer to Section VII) were made to selected plants to confirm existing data and fill the data gaps. Figures 3, 4, and 5 are generalized flow diagrams of emulsion crumb, solution crumb, and latex production facilities, respectively; they indicate the location of water supply and waste water generation.

Data on total effluent flow and characteristics include utility wastewaters. It is virtually impossible to determine meaningfully total plant effluent flows and characteristics exclusive of utility wastes. It should be noted here that utility waste waters are amenable to treatment by the existing treatment facilities in use and commonly practiced by the industry.

Emulsion Crumb Rubber Subcategory

Flow Analysis

Table 12 lists the total effluent flows for plants producing various emulsion crumb rubber products based on a unit of production. This data was obtained by plant visits. Although three plants were sampled, six cases of emulsion crumb production were studied. The waste water contributions of other facilities included solution crumb production and non-rubber commodities.

It can be seen from Table 12 that, for similar products, separate plants appear to have different effluent flows. However, different products at the same plant seemingly produce identical waste water flows. This is due to the following distinct facts:

1. The water use practices in one plant for different emulsion crumb products are based on one technology, namely that of the company's process design and engineering.

2. The inability of the sampling team to discern small differences in effluent flows for different products at the same plant.

It can also be noted that there is no significant trend in waste water generation rate between the various types of emulsion crumb rubber product (non-extended, "hot", oil extended, and carbon black extended).

The average effluent flow rate for emulsion crumb is 16,600 L/kkg (2000 gal/1000 lb) of production.

TABLE 12

Raw Waste Loads for Emulsion Crumb Rubber Plants[1]

Plant	Product	FLOW L/kkg(gal/ 1,000 lb)	COD kg/kkg(lb/ 1,000 lb)	BOD kg/kkg(lb/ 1,000 lb)	SS[2] kg/kkg.lb/ 1,000 lb)	OIL kg/kkg(lb/ 1,000 lb)
J	SBR and NBR Part Oil and Carbon Black Extended	15,000 (1,860)	11.98	N.A.	3.73	2.09
K	SBR Part Oil Extended	18,500 (2,220)	22.23	2.13	2.30	0.13
K	SBR Oil Extended	18,500 (2,220)	19.76	2.13	11.31	3.54
L	SBR Oil and Carbon Black Extended	16,500 (1,980)	8.72	2.84	3.94	0.48
L	SBR ''Hot'', Non-Extended	15,500 (1,860)	29.24	2.84	N.A.	1.31
L	SBR Non-Extended	15,500 (1,860)	25.87	2.84	11.94	1.45
Median Value			19.63	2.56	6.64	1.5

[1] Includes utility wastewaters.

[2] Raw waste load determined downstream of crumb pits, where the suspended solids and oil levels are reduced.
N.A. Data not available.

Raw Waste Loads

Table 12 also summarized the raw waste loads for the six cases. It can be seen that the parameter with the highest concentration is COD. The BOD values are generally much lower. The high COD to BOD ratio is indicative of the high resistance of many of the constituents in the wastewaters to biological oxidation.

The raw suspended solids concentration in the emulsion crumb waste waters were determined after separation of the rubber fines in the crumb pits. Since all emulsion crumb plants have separation pits, this raw waste load data is applicable to the industry. Much of the suspended solids contribution is due to uncoagulated latex solids. The concentration of oil does not appear to be related to the degree to which the crumb rubber is oil extended. The oil analysis cited is really "carbon tetrachloride extractables" and will also include insoluble monomers.

Another significant parameter in emulsion crumb waste waters is total dissolved solids. This is due to the use of salt in the crumb coagulation process and associated rinse over flows.

Surfactants are another characteristic produced by the emulsifying agents. The level of surfactants in the waste water is considerably lower than the parameters reported in Table 13.

Individual Waste Streams

Table 13 presents the major constituent loadings of the principal wastewater streams in an emulsion crumb plant. The most significant parameter is total dissolved solids which is produced by the acid and brine coagulation liquors. The coagulation liquor and crumb rinse overflows, along with the utility wastes, provide the bulk of the total dissolved solids in the plant effluent. It can be seen that the quantity of surfactants produced are much lower than the other parameters. Surfactants are generated in appreciable quantities only by waste streams included in Table 12. The suspended solids are much higher than in the total effluent since the crumb pits remove much of the suspended solids in the crumb rinse overflow. Removals better than 95 percent are common. Oil entrained in the rubber is also removed along with rubber crumb solids.

When comparing the sub-total parameter values of Table 13 with the average total effluent loads of Table 12, it can be seen that the three streams listed in Table 13 are the major contributors to the total effluent.

The spent caustic scrub solution is an extremely low flow rate waste water which has very high COD, alkalinity, pH, and color characteristics. It is not, however, a significant waste stream when combined in the total effluent. It is usually bled-in at low flow rates into the effluent.

TABLE 13

Raw Waste Loads of the Principal Individual Wastewater Streams in an Emulsion Crumb Rubber Plant

Wastewater Stream	COD - kg/kkg (lb/1000 lb.)	BOD - kg/kkg (lb/1000 lb.)	SS[1] - kg/kkg (lb/1000 lb.)	TDS - kg/kkg (lb/1000 lb.)	OIL[1] - kg/kkg (lb/1000 lb.)	SURFACTANTS (lb/1000 lb.)
Monomer Recovery	0.66	0.14	0.08	1.26	0.11	0.0001
Coagulation Liquor Overflow	1.30	N.A.	N.A.	46.25	0.10	N.A.
Crumb Rinse Overflow[2]	6.39	0.46	33.44	42.33	1.46	0.0077
Sub-Total	8.35	0.60	33.52	89.74	1.67	0.0078

[1] Raw waste load determined prior to crumb pit, where the suspended solids and oil levels are reduced.

[2] In one case, the crumb rinse overflow is combined with the coagulation liquor overflow and discharged as one combined stream.

N.A. Data not available.

Area washdown and equipment clean-out waste waters are highly loaded with COD and suspended solids, and, by nature, are intermittent in flow. They cannot be characterized because they are generated on an irregular basis and have greatly variable concentration loadings.

Chromium and zinc are present in low concentrations (0.1 mg/L) in the final effluent. They are present due to cooling water treatment, and in some cases can be eliminated or reduced by substitution of chromium-free corrosion inhibitors. Heavy metals from catalysts and other reaction ingredients are not present in measurable concentrations in emulsion plant waste water effluents.

Solution Crumb Rubber Subcategory

Flow Analysis

Table 14 presents the total effluent waste water flows for facilities producing various solution crumb rubber products. The flow data is given in terms of liters per metric ton (kkg) of production. Five plants were visited and eight types of solution crumb product were sampled. Some plants are multi-product facilities, and the contributions of the solution crumb facilities were accounted for.

Table 14 shows that there is no discernible difference in the effluent flows between types of product. There appears to be more correlation between products at the same plant site. This is similar to the findings for emulsion crumb rubber production.

One plant (Plant M) has a considerably lower effluent flow than all the other facilities. The apparent reason for this difference is the use of a special rubber-finishing process which generates very little or no waste water.

The average effluent flow for solution plants is similar to emulsion plants, and typically approximates 16,600 L/kkg (2000 gal/1000 lb) of production.

Raw Waste Loads

Table 14 also presents the raw waste loads for the four main parameters. It can be seen that the constituent levels are approximately one half of those present in emulsion crumb waste waters. This supports literature and company data which indicate that the solution production processes are "cleaner" than their emulsion counterparts. The main factor behind this is the absence of coagulation liquor and uncoagulated latex. The COD to BOD ratio is high which indicates that a considerable proportion of the raw waste water components are not readily biologically oxidizable.

The total dissolved solids content of solution crumb waste water is considerably lower than for emulsion crumb plants. This again is mainly due to the absence of the coagulation liquor.

TABLE 14

Raw Waste Loads for Solution Crumb Rubber Plants

Plant	Product	FLOW L/kkg(gal./1,000lb)	COD kg/kkg(lb/1,000 lb)	BOD kg/kkg(lb/1,000 lb)	SS[1] kg/kkg(lb/1,000 lb)	OIL kg/kkg(lb/1,000 lb)
K	SBR Oil Extended	10,500 (1,260)	4.04	0.09	0.81	N.A.
K	SBR Carbon Black Extended	17,800 (2.137)	20.80	0.18	2.20	N.A.
L	PBR Oil Extended	28,500 (3,421)	18.40	1.55	5.72	2.43
L	SBR Non-Extended	14,700 (1,765)	13,28	0.82	1.79	1.43
M	PBR Non-Extended	3,400 (408)	0.17	0.06	0.05	0.07
N	IR Non-Extended	11,900 (1,429)	3.61	1.37	N.A.	0.01
N	PBR Part Oil Extended	11,900 (1,429)	3.01	1.37	5.37	2.32
O	PBR, IR EPDM Part Oil and Carbon Black Extended	29,000 (3,481)	5.33	3.57	3.71	0.23
	Median Value		9.03	1.13	2.81	1.08

[1] Raw waste load determined downstream of crumb pits, where the suspended solids and oil levels are reduced

N.A. Data not available.

Surfactant concentrations in the total plant effluent are low. Surfactants are used to de-agglomerate the crumb rubber during coagulation and rinsing.

The solvent recovery systems do not produce any significant effect on the COD or BOD content of the effluent.

One plant (Plant M) has considerably lower loadings than the others. This is probably due to the fact that rubber for non-tire use is produced at this plant. This rubber is used to manufacture impact-resistant resins, and its quality and production controls are extremely critical. In addition, special finishing equipment appears to be used.

Individual Waste Streams

The crumb rinse overflow produced at a solution crumb plant is similar to that produced at an emulsion crumb plant, with the exception that un-coagulated latex is not present. The suspended solids, mostly crumb rubber fines, are similar to those in emulsion crumb rinse overflows; the crumb pits produce the same reductions.

The monomer and solvent recovery wastes are comparable to the monomer recovery wastes from emulsion plants. Although heavy slops are produced in some plants, these are usually disposed of by drumming or incineration. Since monomer purities must be high, recovered butadiene, for example, is returned to the monomer supply plant and has no impact on the solution crumb rubber waste water.

Equipment clean-out waste waters are less of an environmental problem in a solution plant because much of the processing equipment must be kept dry or water free. Area washdowns are similar in volume, but do not contain latex. These washdowns do pick-up rubber solids and oil from pumps and machinery areas.

The spent caustic scrub solution, where used, is identical to that used in emulsion crumb production. In plants where emulsion and solution crumb rubber is produced, the same caustic scrub system is used for both facilities.

Catalysts and other reaction ingredients do not produce discernible quantities of heavy metals or toxic constituents. Chromium and zinc in cooling tower blowdown are present in some plant effluents, but in concentrations of 0.1 mg/L or less in the final effluent. These can be eliminated or reduced by using cheromium-free corrosion inhibitors.

Latex Rubber Subcategory

Flow Analysis

Table 15 lists the total effluent flows for latex rubber plants. Only two plants are presented, but the similarity between the data values is good. Latex plants are generally part of larger complexes, and flow data for latex operations is difficult to obtain. The flow from latex

TABLE 15

Raw Waste Loads for Latex Rubber Plants

Plant	Product	FLOW L)kkg(gal) 1,000lb)	COD kg/kkg(lb/ 1,000 lb)	BOD kg/kkg(lb/ 1,000 lb)	SS kg/kkg(lb/ 1,000 lb)	OIL kg/kkg(lb/ 1,000 lb)
P	SBR and NBR	14,900 (1,790)	36.37	5.61	6.70	N.A.
Q	SBR	12,000 (1,500)	33.52	5.01	5.63	0.33
Average Value			34,95	5.31	6.17	0.33

N.A. Data not available.

plants appears to be lower than from either emulsion crumb or solution crumb facilities. The major flow contributions at latex plants originate with equipment cleaning, area washdown operations, and waters from vacuum pump seal systems.

Raw Waste Loads

The raw waste loads of latex plant waste waters are considerably higher than either emulsion or solution crumb plants. Equipment cleanout and area washdowns are frequent due to smaller produce runs, and considerable quantities of uncoagulated latex are contained in these waste waters. The high COD to BOD ratio is typical of all synthetic rubber subcategories and underlines the resistance to biological oxidation of the waste water constituents. Oil concentration is lower than in emulsion or solution crumb facilities and is contributed by separable monomers, such as styrene, in the wastes. The suspended solids in the effluent are due mainly to uncoagulated latex. Total dissolved solid levels are lower than for emulsion plants because of coagulation liquor stream. Surfactants are present, but in much lower concentrations than the other parameters.

Individual Waste Streams

Tank, reactor, and filter cleaning produces considerable quantities of waste water. These are characterized by high COD, BOD, and suspended solids. In addition, unloading and product loading areas and general plant areas are frequently washed down. The characteristics of these wastes are similar to those produced by usual equipment cleaning in this industry. Vacuum pump seal waters contain small quantities of organics which produce moderate levels of COD from the vacuum stripping operation. The stripping condensates contain condensed monomers. Most of these monomers are decanted from the water and re-used. The water layer overflow from the decanter has high COD and BOD concentrations.

Spent caustic scrub solution is an extremely low flow waste and has similar characteristics to spent solutions produced in emulsion crumb and solution crumb plants.

SECTION VI

SELECTION OF POLLUTION PARAMETERS

Tire and Inner Tube Industry

From review of the U.S. Army Corps of Engineers Permit Applications for direct discharge of waste waters from tire and inner tube production facilities and examination of related published data, it appears that the following constituents are present in measurable quantities in the waste water effluents from tire and inner tube production facilities:

- BOD
- COD
- Suspended Solids
- Total Dissolved Solids
- Oil and Grease
- pH
- Temperature (Heat)
- Chromium

Examination of in-plant and anlytical data obtained during the on-site inspections of a number of production facilities indicates that certain parameters are present only in insignificant amounts or are contributed by discharges unrelated to the process facilities. These nonprocess effluents result mainly from utility and water treatment discharges and from domestic waste water discharges generated within the plant boundaries. Such nonprocess-related discharges are the subject of other studies and are intended to be covered by other EPA documents.

In the following part of this section, the rationale for elimination or selection of the aforementioned parameters is discussed and recommendations proposed.

BOD

Biochemical oxygen demand (BOD) refers to the amount of oxygen required to stabilize biodegradable organic matter under aerobic conditions. BOD concentrations measured in waste waters discharged by tire and inner tube production facilities are very low. Their presence is due primarily to the organics used in the soapstone and latex dipping solutions. Concentration values range from less than 1 mg/L to 30 mg/L for process waste waters at the plants visited; most of the values obtained in the course of these visits were less than 5 mg/L. Consequently, this parameter was considered insignificant in this segment of the rubber industry. Higher concentration values of BOD in the effluents did result when domestic wastes were combined with the process and nonprocess waters and also after combining certain chemical boiler water treatment discharges.

Biochemical oxygen demand (BOD) is a measure of the oxygen consuming capabilities of organic matter. The BOD does not in itself cause direct

harm to a water system, but it does exert an indirect effect by depressing the oxygen content of the water. Sewage and other organic effluents during their processes of decomposition exert a BOD, which can have a catastrophic effect on the ecosystem by depleting the oxygen supply. Conditions are reached frequently where all of the oxygen is used and the continuing decay process causes the production of noxious gases such as hydrogen sulfide and methane. Water with a high BOD indicates the presence of decomposing organic matter and subsequent high bacterial counts that degrade its quality and potential uses.

Dissolved oxygen (DO) is a water quality constituent that, in appropriate concentrations, is essential not only to keep organisms living but also to sustain species reproduction, vigor, and the development of populations. Organisms undergo stress at reduced D.O. concentrations that make them less competitive and able to sustain their species within the aquatic environment. For example, reduced DO concentrations have been shown to interfere with fish population through delayed hatching of eggs, reduced size and vigor of embryos, production of deformities in young, interference with food digestion, acceleration of blood clotting, decreased tolerance to certain toxicants, reduced food efficiency and growth rate, and reduced maximum sustained swimming speed. Fish food organisms are likewise affected adversely in conditions with suppressed DO. Since all aerobic aquatic organisms need a certain amount of oxygen, the consequences of total lack of dissolved oxygen due to a high BOD can kill all inhabitants of the affected area.

If a high BOD is present, the quality of the water is usually visually degraded by the presence of decomposing materials and algae blooms due to the uptake of degraded materials that form the foodstuffs of the algal populations.

COD

Chemical oxygen demand (COD) provides a measure of the equivalent oxygen required to chemically oxidize the organic/inorganic material present in a waste water sample. COD in tire and inner tube process waste waters is attributable to principally washdown and runoff from oil contaminated, soapstone and latex dip areas. In addition intermittent discharges of spent soapstone and latex solutions contribute to the COD of the process waste waters. COD levels generally range from 5 mg/L to 30 mg/L. Accordingly it is not necessary to subject tire and inner tube plant process effluents to COD limitations if suspended solids and oil and grease are controlled.

Suspended Solids

Suspended solids after discharge to a water course can settle to the bottom and blanket spawning grounds, interfere with fish propagation, an may exert an appreciable oxygen demand on the body of water. Suspended solids in tire and tube plant waste waters are due to washdown and runoff from compounding areas, discharges of soapstone solution, and boiler blowdowns and water treatment wastes. In the normal daily production operation, the nonprocess blowdowns and the water treatment

wastes will contribute the largest amounts of suspended solids. Suspended solids concentrations in process waste waters will vary from less than 10 mg/L (with proper in-plant controls) to over 20,000 mg/L during soapstone solution dumping and discharge.

Suspended solids include both organic and inorganic materials. The inorganic components include sand, silt, and clay. The organic fraction includes such materials as grease, oil, tar, animal and vegetable fats, various fibers, sawdust, hair, and various materials from sewers. These solids may settle out rapidly and bottom deposits are often a mixture of both organic and inorganic solids. They adversely affect fisheries by covering the bottom of the stream or lake with a blanket of material that destroys the fish-food bottom fauna or the spawning ground of fish. Deposits containing organic materials may deplete bottom oxygen supplies and produce hydrogen sulfide, carbon dioxide, methane, and other noxious gases.

In raw water sources for domestic use, state and regional agencies generally specify that suspended solids in streams shall not be present in sufficient concentration to be objectionable or to interfere with normal treatment processes. Suspended solids in water may interfere with many industrial processes, and cause foaming in boilers, or encrustations on equipment exposed to water, especially as the temperature rises. Suspended solids are undesirable in water for textile industries; paper and pulp; beverages; dairy products; laundries; dyeing; photography; cooling systems, and power plants. Suspended particles also serve as a transport mechanism for pesticides and other substances which are readily sorbed into or onto clay particles.

Solids may be suspended in water for a time, and then settle to the bed of the stream or lake. These settleable solids discharged with man's wastes may be inert, slowly biodegradable materials, or rapidly decomposable substances. While in suspension, they increase the turbidity of the water, reduce light penetration and impair the photosynthetic activity of aquatic plants.

Solids in suspension are aesthetically displeasing. When they settle to form sludge deposits on the stream or lake bed, they are often much more damaging to the life in water, and they retain the capacity to displease the senses. Solids, when transformed to sludge deposits, may do a variety of damaging things, including blanketing the stream or lake bed and thereby destroying the living spaces for those benthic organisms that would otherwise occupy the habitat. When of an organic and therefore decomposable nature, solids use a portion or all of the dissolved oxygen available in the area. Organic materials also serve as a seemingly inexhaustible food source for sludgeworms and associated organisms.

Turbidity is principally a measure of the light absorbing properties of suspended solids. It is frequently used as a substitute method of quickly estimating the total suspended solids when the concentration is relatively low.

Total Dissolved Solids

High concentrations of dissolved solids (TDS) originate from the non-process waste water effluents from cooling towers, boiler blowdowns, and water treatment system backwashes and blowdowns. In addition, high concentrations of TDS were observed in all effluents when the raw water supply was from deep wells rather than city water.

In natural waters the dissolved solids consist mainly of carbonates, chlorides, sulfates, phosphates, and possibly nitrates of calcium, magnesium, sodium, and potassium, with traces of iron, manganese and other substances.

Many communities in the United States and in other countries use water supplies containing 2000 to 4000 mg/l of dissolved salts, when no better water is available. Such waters are not palatable, may not quench thirst, and may have a laxative action on new users. Waters containing more than 4000 mg/l of total salts are generally considered unfit for human use, although in hot climates such higher salt concentrations can be tolerated whereas they could not be in temperate climates. Waters containing 5000 mg/l or more are reported to be bitter and act as bladder and intestinal irritants. It is generally agreed that the salt concentration of good, palatable water should not exceed 500 mg/l.

Limiting concentrations of dissolved solids for fresh-water fish may range from 5,000 to 10,000 mg/l, according to species and prior acclimatization. Some fish are adapted to living in more saline waters, and a few species of fresh-water forms have been found in natural waters with a salt concentration of 15,000 to 20,000 mg/l. Fish can slowly become acclimatized to higher salinities, but fish in waters of low salinity cannot survive sudden exposure to high salinities, such as those resulting from discharges of oil-well brines. Dissolved solids may influence the toxicity of heavy metals and organic compounds to fish and other aquatic life, primarily because of the antagonistic effect of hardness on metals.

Waters with total dissolved solids over 500 mg/l have decreasing utility as irrigation water. At 5,000 mg/l water has little or no value for irrigation.

Dissolved solids in industrial waters can cause foaming in boilers and cause interference with cleaness, color, or taste of many finished products. High contents of dissolved solids also tend to accelerate corrosion.

Specific conductance is a measure of the capacity of water to convey an electric current. This property is related to the total concentration of ionized substances in water and water temperature. This property is frequently used as a substitute method of quickly estimating the dissolved solids concentration.

Oil and Grease

Oil and Grease is a measure of the insoluble hydrocarbons and free-floating and emulsufied oil in a wastewater sample. Oil and grease are critical to waste water treatment and stream ecology because they interfere with oxygen transfer. Oil and grease exist in process waste waters due to washdown, runoff, spills, and leakage in the process areas which pick up lubricating oil from machinery and extender oil from storage areas. Concentration values in the total effluent range from less than 5 mg/L to 83 mg/L. Concentrations in the total plant effluent are not indicative of the oil and grease problem because of dilution by nonprocess waste waters. Loadings in the plants visited ranged from less than 1 kg/kkg to 5.47 kg/kkg of raw material. Since oily wastes result from intermittent flows, instantaneous values could be much higher at times.

Oil and grease exhibit an oxygen demand. Oil emulsions may adhere to the gills of fish or coat and destroy algae or other plankton. Deposition of oil in the bottom sediments can serve to exhibit normal benthic growths, thus interrupting the aquatic food chain. Soluble and emulsified material ingested by fish may taint the flavor of the fish flesh. Water soluble components may exert toxic action on fish. Floating oil may reduce the re-aeration of the water surface and in conjunction with emulsified oil may interfere with photosynthesis. Water insoluble components damage the plumage and costs of water animals and fowls. Oil and grease in a water can result in the formation of objectionable surface slicks preventing the full aesthetic enjoyment of the water.

Oil spills can damage the surface of boats and can destroy the aesthetic characteristics of beaches and shorelines.

pH

Control and adjustment of pH in the process waste waters generated in the tire and inner tube segment of the industry should be practiced. Failure to maintain adequate control can have a deleterious effect on acquatic life, post-precipitation of soluble salts, etc.

Acidity and alkalinity are reciprocal terms. Acidity is produced by substances that yield hydrogen ions upon hydrolysis and alkalinity is produced by substances that yield hydroxyl ions. The terms "total acidity" and "total alkalinity" are often used to express the buffering capacity of a solution. Acidity in natural waters is caused by carbon dioxide, mineral acids, weakly dissociated acids, and the salts of strong acids and weak bases. Alkalinity is caused by strong bases and the salts of strong alkalies and weak acids.

The term pH is a logarithmic expression of the concentration of hydrogen ions. At a pH of 7, the hydrogen and hydroxyl ion concentrations are essentially equal and the water is neutral. Lower pH values indicate acidity while higher values indicate alkalinity. The relationship between pH and acidity or alkalinity is not necessarily linear or direct.

Waters with a pH below 6.0 are corrosive to water works structures, distribution lines, and household plumbing fixtures and can thus add such constituents to drinking water as iron, copper, zinc, cadmium and lead. The hydrogen ion concentration can affect the "taste" of the water. At a low pH water tastes "sour". The bactericidal effect of chlorine is weakened as the pH increases, and it is advantageous to keep the pH close to 7. This is very significant for providing safe drinking water.

Extremes of pH or rapid pH changes can exert stress conditions or kill aquatic life outright. Dead fish, associated algal blooms, and foul stenches are aesthetic liabilities of any waterway. Even moderate changes from "acceptable" criteria limits of pH are deleterious to some species. The relative toxicity to aquatic life of many materials is increased by changes in the water pH. Metalocyanide complexes can increase a thousand-fold in toxicity with a drop of 1.5 pH units. The availability of many nutrient substances varies with the alkalinity and acidity. Ammonia is more lethal with a higher pH.

The lacrimal fluid of the human eye has a pH of approximately 7.0 and a deviation of 0.1 pH unit from the norm may result in eye irritation for the swimmer. Appreciable irritation will cause severe pain.

Temperature (Heat)

Elevated temperatures in total plant effluents occur only when collected steam condensate (utility waste) is not recycled but is discharged into the plant effluent. Excessive temperatives are not encountered in process waste waters. Consequently, a temperature limitation for process waste waters is not considered necessary. Although temperature

is a potential problem for direct discharge, it appears to be insignificant in the total plant effluent when controlling and treating process waste waters.

Temperature is one of the most important and influential water quality characteristics. Temperature determines those species that may be present; it activates the hatching of young, regulates their activity, and stimulates or suppresses their growth and development; it attracts, and may kill when the water becomes too hot or becomes chilled too suddenly. Colder water generally suppresses development. Warmer water generally accelerates activity and may be a primary cause of aquatic plant nuisances when other environmental factors are suitable.

Temperature is a prime regulator of natural processes within the water environment. It governs physiological functions in organisms and, acting directly or indirectly in combination with other water quality constituents, it affects aquatic life with each change. These effects include chemical reaction rates, enzymatic functions, molecular movements, and molecular exchanges between membranes within and between the physiological systems and the organs of an animal.

Chemical reaction rates vary with temperature and generally increase as the temperature is increased. The solubility of gases in water varies with temperature. Dissolved oxygen is decreased by the decay or decomposition of dissolved organic substances and the decay rate increases as the temperature of the water increases reaching a maximum at about 30°C (86°F). The temperature of stream water, even during summer, is below the optimum for pollution-associated bacteria. Increasing the water temperature increases the bacterial multiplication rate when the environment is favorable and the food supply is abundant.

Reproduction cycles may be changed significantly by increased temperature because this function takes place under restricted temperature ranges. Spawning may not occur at all because temperatures are too high. Thus, a fish population may exist in a heated area only by continued immigration. Disregarding the decreased reproductive potential, water temperatures need not reach lethal levels to decimate a species. Temperatures that favor competitors, predators, parasites, and disease can destroy a species at levels far below those that are lethal.

Fish food organisms are altered severely when temperatures approach or exceed 90°F. Predominant algal species change, primary production is decreased, and bottom associated organisms may be depleted or altered drastically in numbers and distribution. Increased water temperatures may cause aquatic plant nuisances when other environmental factors are favorable.

Synergistic actions of pollutants are more severe at higher water temperatures. Given amounts of domestic sewage, refinery wastes, oils, tars, insecticides, detergents, and fertilizers more rapidly deplete oxygen in water at higher temperatures, and the respective toxicities are likewise increased.

When water temperatures increase, the predominant algal species may change from diatoms to green algae, and finally at high temperatures to blue-green algae, because of species temperature preferentials. Blue-green algae can cause serious odor problems. The number and distribution of benthic organisms decreases as water temperatures increase above 90°F, which is close to the tolerance limit for the population. This could seriously affect certain fish that depend on benthinc organisms as a food source.

The cost of fish being attracted to heated water in winter months may be considerable, due to fish mortalities that may result when the fish return to the cooler water.

Rising temperatures stimulate the decomposition of sludge, formation of sludge gas, multiplication of saprophytic bacteria and fungi (particularly in the presence of organic wastes), and the consumption of oxygen by putrefactive processes, thus affecting the esthetic value of a water course.

In general, marine water temperatures do not change as rapidly or range as widely as those of freshwaters. Marine and estuarine fishes, therefore, are less tolerant of temperature variation. Although this limited tolerance is greater in estuarine than in open water marine species, temperature changes are more important to those fishes in estuaries and bays than to those in open marine areas, because of the nursery and replenishment functions of the estuary that can be adversely affected by extreme temperature changes.

Chromium

Heavy metals such as chromium are toxic to micro-organisms because of their ability to tie up the proteins in the key enzyme systems of the micro-organism. Chromium appears in the nonprocess discharges mainly from the cooling tower blowdown. Chromium compounds are used as a corrosion inhibitor and added to the tower basin or cooling tower make-up. Chromium and other heavy metals will normally not be present in the process waste water effluent.

Chromium, in its various valence states, is hazardous to man. It can produce lung tumors when inhaled and induces skin sensitizations. Large doses of chromates have corrosive effects on the intestinal tract and can cause inflammation of the kidneys. Levels of chromate ions that have no effect on man appear to be so low as to prohibit determination to date.

The toxicity of chromium salts toward aquatic life varies widely with the species, temperature, pH, valence of the chromium, and synergistic or antagonistic effects, especially that of hardness. Fish are relatively tolerant of chromium salts, but fish food organisms and other lower forms of aquatic life are extremely sensitive. Chromium also inhibits the growth of algae.

In some agricultural crops, chromium can cause reduced growth or death of the crop. Adverse effects of low concentrations of chromium on corn, tobacco and sugar beets have been documented.

Summary of Significant Pollutants

Of the pollutants examined, only, suspended solids, oil and grease, and pH are significant characteristics when considering process waste water discharges. All three parameters, suspended solids, and oil and grease, and pH need to be controlled, treated, and monitored. The recommended list of control parameters for tire and inner tube plants, therefore, is as follows:

Suspended Solids
Oil and Grease
pH

Synthetic Rubber Industry

In view of the fact that similar processing techniques and similar catalysts and monomeric raw materials are used in emulsion crumb rubber, solution crumb rubber, and latex rubber production, it is appropriate to consider the same waste water parameters for the three synthetic rubber subcategories.

Review of the published literature, EPA documents, industry records and the findings of the plant visits indicated that the following chemical, physical and biological constituents are pollutants (as defined in the Federal Water Pollution Control Act Amendments of 1972) found in measurable quantities from synthetic rubber plant waste water effluents:

COD
BOD
Suspended Solids
Total Dissolved Solids
Oil and Grease
pH
Acidity/Alkalinity
Surfactants
Color
Temperature (Heat)

These parameters are present in the raw waste streams of all synthetic rubber plants. Pollutants in utility and service water systems and in water treatment system regenerations and backwashes are outside the scope of this document and will be the subject of a separate study and at a future date.

COD

Since numerous organic compounds contact process waste waters, COD will occur in the plant effluent. Values range from 9.3 kg/kkg (lb/1000 lb)

of production for solution crumb. to 34.95 kg/kkg(lb/1000 lb) of production for latex rubber.

Treatment techniques reduce this contaminant, but high residual levels still exist in the treated effluent. This is indicative of the fact that some waste water constituents have high biological oxidation resistance or inorganic oxygen demand.

BOD

For the same reasons as for COD, moderate to high BOD concentrations are present in synthetic rubber plant waste waters. Values range from 1.13 kg/kkg(lb/1000 lb) of production for solution crumb to 5.30 kg/kkg(lb/1000 lb) of production for latex rubber. Typical industry-wide flow and production data show that this pollutant can be reduced by biological treatment to reasonably low levels (10 mg/L).

Biochemical oxygen demand (BOD) is a measure of the oxygen consuming capabilities of organic matter. The BOD does not in itself cause direct harm to a water system, but it does exert an indirect effect by depressing the oxygen content of the water. Sewage and other organic effluents during their processes of decomposition exert a BOD, which can have a catastrophic effect on the ecosystem by depleting the oxygen supply. Conditions are reached frequently where all of the oxygen is used and the continuing decay process causes the production of noxious gases such as hydrogen sulfide and methane. Water with a high BOD indicates the presence of decomposing organic matter and subsequent high bacterial counts that degrade its quality and potential uses.

Dissolved oxygen (DO) is a water quality constituent that, in appropriate concentrations, is essential not only to keep organisms living but also to sustain species reproduction, vigor, and the development of populations. Organisms undergo stress at reduced D.O. concentrations that make them less competitive and able to sustain their species within the aquatic environment. For example, reduced DO concentrations have been shown to interfere with fish population through delayed hatching of eggs, reduced size and vigor of embryos, production of deformities in young, interference with food digestion, acceleration of blood clotting, decreased tolerance to certain toxicants, reduced food efficiency and growth rate, and reduced maximum sustained swimming speed. Fish food organisms are likewise affected adversely in conditions with suppressed DO. Since all aerobic aquatic organisms need a certain amount of oxygen, the consequences of total lack of dissolved oxygen due to a high BOD can kill all inhabitants of the affected area.

If a high BOD is present, the quality of the water is usually visually degraded by the presence of decomposing materials and algae blooms due to the uptake of degraded materials that form the foodstuffs of the algal populations.

Suspended Solids

In emulsion crumb and latex plants, uncoagulated latex contributes to high suspended solids. These can be removed by chemical coagulation or air flotation followed by clarification. In both the emulsion crumb and the solution crumb subcategories, suspended solids are produced by rubber crumb fines. Gravity separation readily reduces these solids. Suspended solids ranging rom 6.17 kg/kkg(lb/1000 lb) of production (latex rubber) to 2.81 kg/kkg(lb/1000 lb) of production (solution crumb) are common in the raw waste water.

Suspended solids include both organic and inorganic materials. The inorganic components include sand, silt, and clay. The organic fraction includes such materials as grease, oil, tar, animal and vegetable fats, various fibers, sawdust, hair, and various materials from sewers. These solids may settle out rapidly and bottom deposits are often a mixture of both organic and inorganic solids. They adversely affect fisheries by covering the bottom of the stream or lake with a blanket of material that destroys the fish-food bottom fauna or the spawning ground of fish. Deposits containing organic materials may deplete bottom oxygen supplies and produce hydrogen sulfide, carbon dioxide, methane, and other noxious gases.

In raw water sources for domestic use, state and regional agencies generally specify that suspended solids in streams shall not be present in sufficient concentration to be objectionable or to interfere with normal treatment processes. Suspended solids in water may interfere with many industrial processes, and cause foaming in boilers, or encrustations on equipment exposed to water, especially as the temperature rises. Suspended solids are undesirable in water for textile industries; paper and pulp; beverages; dairy products; laundries; dyeing; photography; cooling systems, and power plants. Suspended particles also serve as a transport mechanism for pesticides and other substances which are readily sorbed into or onto clay particles.

Solids may be suspended in water for a time, and then settle to the bed of the stream or lake. These settleable solids discharged with man's wastes may be inert, slowly biodegradable materials, or rapidly decomposable substances. While in suspension, they increase the turbidity of the water, reduce light penetration and impair the photosynthetic activity of aquatic plants.

Solids in suspension are aesthetically displeasing. When they settle to form sludge deposits on the stream or lake bed, they are often much more damaging to the life in water, and they retain the capacity to displease the senses. Solids, when transformed to sludge deposits, may do a variety of damaging things, including blanketing the stream or lake bed and thereby destroying the living spaces for those benthic organisms that would otherwise occupy the habitat. When of an organic and therefore decomposable nature, solids use a portion or all of the dissolved oxygen available in the area. Organic materials also serve as a seemingly inexhaustible food source for sludgeworms and associated organisms.

Turbidity is principally a measure of the light absorbing properties of suspended solids. It is frequently used as a substitute method of quickly estimating the total suspended solids when the concentration is relatively low.

Total Dissolved Solids

The coagulation liquor used in emulsion crumb production is a major contributor of total dissolved solids in emulsion crumb effluents. The solution crumb and latex subcategories also produce waste water containing appreciable amounts of total dissolved solids. Because of the technical risk, excessive costs and dubious benefits involved in the application of treatments systems for total dissolved solids removal in this industry, no limitations for total dissolved solids have been set.

In natural waters the dissolved solids consist mainly of carbonates, chlorides, sulfates, phosphates, and possibly nitrates of calcium, magnesium, sodium, and potassium, with traces of iron, manganese and other substances.

Many communities in the United States and in other countries use water supplies containing 2000 to 4000 mg/l of dissolved salts, when no better water is available. Such waters are not palatable, may not quench thirst, and may have a laxative action on new users. Waters containing more than 4000 mg/l of total salts are generally considered unfit for human use, although in hot climates such higher salt concentrations can be tolerated whereas they could not be in temperate climates. Waters containing 5000 mg/l or more are reported to be bitter and act as bladder and intestinal irritants. It is generally agreed that the salt concentration of good, palatable water should not exceed 500 mg/l.

Limiting concentrations of dissolved solids for fresh-water fish may range from 5,000 to 10,000 mg/l, according to species and prior acclimatization. Some fish are adapted to living in more saline waters, and a few species of fresh-water forms have been found in natural waters with a salt concentration of 15,000 to 20,000 mg/l. Fish can slowly become acclimatized to higher salinities, but fish in waters of low salinity cannot survive sudden exposure to high salinities, such as those resulting from discharges of oil-well brines. Dissolved solids may influence the toxicity of heavy metals and organic compounds to fish and other aquatic life, primarily because of the antagonistic effect of hardness on metals.

Waters with total dissolved solids over 500 mg/l have decreasing utility as irrigation water. At 5,000 mg/l water has little or no value for irrigation.

Dissolved solids in industrial waters can cause foaming in boilers and cause interference with cleaness, color, or taste of many finished products. High contents of dissolved solids also tend to accelerate corrosion.

Specific conductance is a measure of the capacity of water to convey an electric current. This property is related to the total concentration of ionized substances in water and water temperature. This property is frequently used as a substitute method of quickly estimating the dissolved solids concentration.

Oil and Grease

Insoluble monomers, solvents and extender oils are used by two sub-categories, emulsion and solution crumb rubber. Latex production also utilizes the same insoluble monomer. In addition, miscellaneous machinery and hydraulic oils are used. Moreover, genuine oil and grease, measured by solvent extraction (generally carbon tetrachloride) analytical methods, are present in the raw waste waters from these plants. Oil and grease entering the waste water are treated for removal by chemical coagulation and clarification, air flotation clarification, gravity settling, and, to some degree, by biological oxidation.

Oil and grease exhibit an oxygen demand. Oil emulsions may adhere to the gills of fish or coat and destroy algae or other plankton. Deposition of oil in the bottom sediments can serve to exhibit normal benthic growths, thus interrupting the aquatic food chain. Soluble and emulsified material ingested by fish may taint the flavor of the fish flesh. Water soluble components may exert toxic action on fish. Floating oil may reduce the re-aeration of the water surface and in conjunction with emulsified oil may interfere with photosynthesis. Water insoluble components damage the plumage and costs of water animals and fowls. Oil and grease in a water can result in the formation of objectionable surface slicks preventing the full aesthetic enjoyment of the water.

Oil spills can damage the surface of boats and can destroy the aesthetic characteristics of beaches and shorelines.

pH, Acidity/Alkalinity

Since neutralization is practiced prior to biological treatment at all synthetic rubber plant waste water treatment facilities, extreme pH variations outside the range pH 6.0 to 9.0 are not foreseen.

Acidic coagulation liquors are used and discharged in emulsion crumb production, and strong caustic soda solutions are bled into plant effluents where monomer inhibitors are removed. Incidentally, this latter flow is extremely low and does not constitute a problem. However, neutralization is carried out in all industry subcategories prior to biological treatment systems, and, therefore, treated wastes will have little residual acidity or alkalinity.

Acidity and alkalinity are reciprocal terms. Acidity is produced by substances that yield hydrogen ions upon hydrolysis and alkalinity is produced by substances that yield hydroxyl ions. The terms "total acidity" and "total alkalinity" are often used to express the buffering capacity of a solution. Acidity in natural waters is caused by carbon dioxide, mineral acids, weakly dissociated acids, and the salts of strong acids and weak bases. Alkalinity is caused by strong bases and the salts of strong alkalies and weak acids.

The term pH is a logarithmic expression of the concentration of hydrogen ions. At a pH of 7, the hydrogen and hydroxyl ion concentrations are essentially equal and the water is neutral. Lower pH values indicate acidity while higher values indicate alkalinity. The relationship between pH and acidity or alkalinity is not necessarily linear or direct.

Waters with a pH below 6.0 are corrosive to water works structures, distribution lines, and household plumbing fixtures and can thus add such constituents to drinking water as iron, copper, zinc, cadmium and lead. The hydrogen ion concentration can affect the "taste" of the water. At a low pH water tastes "sour". The bactericidal effect of chlorine is weakened as the pH increases, and it is advantageous to keep the pH close to 7. This is very significant for providing safe drinking water.

Extremes of pH or rapid pH changes can exert stress conditions or kill aquatic life outright. Dead fish, associated algal blooms, and foul stenches are aesthetic liabilities of any waterway. Even moderate changes from "acceptable" criteria limits of pH are deleterious to some species. The relative toxicity to aquatic life of many materials is increased by changes in the water pH. Metalocyanide complexes can increase a thousand-fold in toxicity with a drop of 1.5 pH units. The availability of many nutrient substances varies with the alkalinity and acidity. Ammonia is more lethal with a higher pH.

The lacrimal fluid of the human eye has a pH of approximately 7.0 and a deviation of 0.1 pH unit from the norm may result in eye irritation for the swimmer. Appreciable irritation will cause severe pain.

Surfactants

Surfactants are used in all the industry subcategories; however, their concentrations in the raw waste load is very low and is further reduced after biological treatment. Surfactants are the primary cause of foamy plant effluents, but it is difficult to relate surfactant effluent concentration to visual foaming problems. Therefore, limitations for surfactants in effluents having foaming problems should be based on local aesthetic requirements, individual plant location, and stream quality criteria for the receiving body of water.

Color

Color is objectionable form an aesthetic standpoint and also because it interferes with the transmission of sunlight into streams, thereby lessening photosynthetic activity. Some waste streams in synthetic rubber plants, such as spent caustic scrub discharges and carbon black rubber rinse waters, have appreciable color. However, after dilution with the combined plant total effluent and after undergoing biological treatment, there is no discernible color in synthetic rubber plant effluents.

Temperature (Heat)

In synthetic rubber plants there are individual waste water streams, such as condenser flows and crumb slurry overflows, which have high temperatures. However, after combination with other effluent streams, equalization and biological treatment, thermal equilibrium with ambient temperature is approached. Consequently, a temperature parameter for the final effluent is not considered significant or subject to limitations.

Temperature is one of the most important and influential water quality characteristics. Temperature determines those species that may be present; it activates the hatching of young, regulates their activity, and stimulates or suppresses their growth and development; it attracts, and may kill when the water becomes too hot or becomes chilled too suddenly. Colder water generally suppresses development. Warmer water generally accelerates activity and may be a primary cause of aquatic plant nuisances when other environmental factors are suitable.

Temperature is a prime regulator of natural processes within the water environment. It governs physiological functions in organisms and, acting directly or indirectly in combination with other water quality constituents, it affects aquatic life with each change. These effects include chemical reaction rates, enzymatic functions, molecular movements, and molecular exchanges between membranes within and between the physiological systems and the organs of an animal.

Chemical reaction rates vary with temperature and generally increase as the temperature is increased. The solubility of gases in water varies with temperature. Dissolved oxygen is decreased by the decay or decomposition of dissolved organic substances and the decay rate

increases as the temperature of the water increases reaching a maximum at about 30°C (86°F). The temperature of stream water, even during summer, is below the optimum for pollution-associated bacteria. Increasing the water temperature increases the bacterial multiplication rate when the environment is favorable and the food supply is abundant.

Reproduction cycles may be changed significantly by increased temperature because this function takes place under restricted temperature ranges. Spawning may not occur at all because temperatures are too high. Thus, a fish population may exist in a heated area only by continued immigration. Disregarding the decreased reproductive potential, water temperatures need not reach lethal levels to decimate a species. Temperatures that favor competitors, predators, parasites, and disease can destroy a species at levels far below those that are lethal.

Fish food organisms are altered severely when temperatures approach or exceed 90°F. Predominant algal species change, primary production is decreased, and bottom associated organisms may be depleted or altered drastically in numbers and distribution. Increased water temperatures may cause aquatic plant nuisances when other environmental factors are favorable.

Synergistic actions of pollutants are more severe at higher water temperatures. Given amounts of domestic sewage, refinery wastes, oils, tars, insecticides, detergents, and fertilizers more rapidly deplete oxygen in water at higher temperatures, and the respective toxicities are likewise increased.

When water temperatures increase, the predominant algal species may change from diatoms to green algae, and finally at high temperatures to blue-green algae, because of species temperature preferentials. Blue-green algae can cause serious odor problems. The number and distribution of benthic organisms decreases as water temperatures increase above 90°F, which is close to the tolerance limit for the population. This could seriously affect certain fish that depend on benthinc organisms as a food source.

The cost of fish being attracted to heated water in winter months may be considerable, due to fish mortalities that may result when the fish return to the cooler water.

Rising temperatures stimulate the decomposition of sludge, formation of sludge gas, multiplication of saprophytic bacteria and fungi (particularly in the presence of organic wastes), and the consumption of oxygen by putrefactive processes, thus affecting the esthetic value of a water course.

In general, marine water temperatures do not change as rapidly or range as widely as those of freshwaters. Marine and estuarine fishes, therefore, are less tolerant of temperature variation. Although this limited tolerance is greater in estuarine than in open water marine species, temperature changes are more important to those fishes in estuaries and bays than to those in open marine areas, because of the

nursery and replenishment functions of the estuary that can be adversely affected by extreme temperature changes.

Summary of Significant Pollutants

Although the pollutants represented by the previously mentioned list of parameters will occur in synthetic rubber production, only five should be monitored to insure that pollutant levels are minimized and gross discharge prevented. These are:

COD
BOD
Suspended Solids
Oil and Grease
pH

SECTION VII

CONTROL AND TREATMENT TECHNOLOGY

Survey of Selected Plants

General Approach and Summary

In order to review and fully evaluate the waste water control and treatment technologies used in the rubber processing industry, selected plants were visited to conduct operation analyses, review water and waste water management programs, and evaluate waste water treatment facilities. The plants were selected as being exemplary or advanced in their waste water control and treatment technologies, based on effluent and treatment data from the technical literature, EPA documents, Corps of Engineers Permit to Discharge Applications, and individual company treatment data.

Plants producing passenger tires (both bias and radial ply), truck tires, camelback, and inner tubes were visited and studied to determine if the type of product affected the quality and quantity of waste water streams and/or the control and treatment technology employed. Both singleproduct and multiproduct plants were included so that the effects of combined lines on the plant waste waters could be evaluated; likewise, plants of various sizes were studied to determine the impact of production levels. Age was a major consideration because determination of the effect, if any, of newer processing technology and machinery on the control and treatability of process waste streams, was one of the principal objectives of the investigative phase of this project. Table 16 is a summary of the products manufactured, raw material usage, and wastewater control and treatment technologies utilized at the tire and inner tube plants visited.

In the synthetic rubber production segment of the industry, the field visits included plants employing emulsion and solution polymerization processing methods and involving all types of synthetic rubber products: "cold crumb", "hot crumb", non-extended, oil-extended, carbon-black-extended, and latex rubbers. As in the tire and inner tube segment, the effects of single- and multi-product lines, plant size, and plant age on waste water volume and characteristics and related control and treatment technology were evaluated. A summary of the products, processes, production capacities, and waste water control and treatment technologies of the exemplary synthetic rubber plants visited is presented in Table 17.

Tire and Inner Tube Plants

Plant A

This plant, built in 1961 and located in an arid rural community, produces passenger tires, small-implement tires, and front tractor tires. Production rate for passenger tires at the time of the visit was 12,000

Table 16

Wastewater Control and Treatment Technologies at Exemplary Tire and Inner Tube Plants[1]

Plant	Product	Raw Material Usage (Kg/day)	Control Measures	Primary Effluent Treatment	Secondary Effluent Treatment
A	Passenger Tires, Implement Tires, Front Tractor Tires	120,000	Recirculation of Soapstone, Absence of Drains in Dirty Areas	Sedimentation and Holding Lagoon	No Discharge due to Spray Irrigation and Evaporation of Wastewaters
B	Passenger Tires, Industrial Tires	310,000	Recirculation of Soapstone, Baffled Oil Separator for Oil Storage Area, Absence of Drains in Dirty Areas	Sedimentation and Lagoons	None
C	Passenger Tires	349,000	Recirculation of Soapstone	Primary Settling Basins	None
D	Passenger Tires, Truck Tires, Tractor Tires, Camelback	840,000	Recirculation of Soapstone, Oil Separator, Local Oil Sumps	Gravity Separator for Boiler Blowdown, Some Water Treatment Wastes and Wash-down of Soapstone Area	Discharge of Some Water Treatment Wastes to Municipal Treatment Facility
E	Passenger Tires, Truck Tires	210,000	Blockage of Drains, Local Oil Sumps and Gravity Separators, Curbing of Soapstone Area, Recirculation of Soapstone	None	Discharging of Process Waste to Municipal Treatment Facility
F	Passenger Tires, Truck Tires, Inner Tubes, Camelback	681,000	Recirculation of Soapstone, Oil Sump for Oil Storage Area	Primary Settling Basin and Clarifying Basin	None
G	Passenger Tires, Truck Tires	246,000	Recirculation of Soapstone, Oil Sump and Curbs for Oil Storage Area	None	None
H	Truck Tires, Industrial Tires	244,000	Recirculation of Soapstone	Sedimentation Basins for Boiler Blowdown, Cooling Tower and Water Treatment Wastes	Discharge of Treated Wastes to Municipal Treatment Facility
I	Inner Tubes	75,000	Containment of Soap and Soapstone Solutions	None	None

[1] Includes process and non-process wastewater control and treatment facilities.

Table 17

Wastewater Control and Treatment Technologies at Exemplary Synthetic Rubber Plants

Plant	Product[1]	Process	Production Capacity (metric ton/year)	Control Measures	Primary Effluent Treatment	Secondary Effluent Treatment
J	Crumb SBR Crumb NBR	Emulsion	390,000 10,000	Crumb Pits, Carbon Slurry Pit	Chemical Coagulation and Clarification	Aeration, Settling and Stabilization Lagoons
K	Crumb SBR	Solution Emulsion	130,000 200,000	Crumb Pits, Carbon Slurry Pit	Air Flotation Primary Clarification	Aerated Lagoon and Air Flotation Secondary Clarification
L	Crumb SBR Crumb, hot SBR Crumb PBR Crumb SBR	Emulsion Emulsion Solution Solution	120,000 3,700 52,000 10,000	Crumb Pits	Chemical Coagulation and Settling Ponds	Aeration Lagoon and Stabilization Ponds
M	Crumb PBR	Solution	85,000	Crumb Pit, Dry Desolventizing Process, Spent Caustic Pit with Slow Bleed Discharge	Oil Separator	None
N	Crumb IR Crumb PBR	Solution Solution	65,000 110,000	Crumb Pits	Equalization Basin	Activated Sludge
O	Crumb PBR Crumb IR Crumb EPDM	Solution Solution Solution	56,000 50,000 25,000	Crumb Pits, Carbon Slurry Pit	Settling Lagoons	Stabilization Lagoon
P	Latex SBR Latex NBR	Emulsion Emulsion	18,000 3,000	Excess Monomer Decant System	Coagulation and Settling Pit	Activated Sludge
Q	Latex SBR	Emulsion	21,000	Excess Monomer Decant System	Chemical Coagulation and Clarification	Discharge to a Municipal Sewage Treatment Plant

[1] SBR: styrene-butadiene rubber, NBR: acrylonitrile-butadiene rubber, PBR: polybutadiene rubber, EPDM: ethylene-propylene diene rubber.

units per day. In addition to the normal tire processing and production lines, this plant has a latex fabric-dip operation. Raw material consumption was over 120,000 kg (264,000 lbs) per day.

The actual production facility occupies approximately 16 ha (40 ac) of land. The plant boundaries surround another 140 ha (350 ac) of land currently devoted to agricultural use.

The only source of raw water supply is well water. It is used for cooling, steam generation, domestic use, and all other plant needs.

The principal process waste waters from this plant are water and steam leakages, and wash waters from the cleaning of equipment and general work areas. Water leakage occurs at various water-cooled machinery units, including mills, Banburys, tread extruders, and tread-cooling tanks. In addition, water can escape from the hydraulic water system used in the Banbury and press areas. Water and steam occur in the process waste water in the press area as the result of broken seals or failing bladder bags. Oil and solid matter which have collected on the floors are carried along by these various water streams into the area drainage system. The oil is lubrication oil which has dripped or leaked from oil seals on mills, pumps and like equipment, from open gears, from gear boxes, and from the hydraulic water system. Additional oil and solid materials result from leakage at the Banbury dust and oil rings.

Daily washdowns include steam and solvent cleaning of the tread books and miscellaneous machinery parts and the cleaning of the latex dip tank. Weekly cleanups, which occur on the weekends (non-production days), include washdown of the steel grates in the soapstone area.

This plant was specially laid out and engineered so as to keep spills and leakages from becoming a problem. Drains are non-existent in the soapstone area and in many of the mill areas. Removable steel grates have been provided in the soapstone dip area so that spilled soapstone solution will not create a work hazard. Housekeeping practices and schedules have been set up to keep leaks and spills of lubricating oil on the floors of the plant to a minimum. When steam and water leakages do occur, they are directed (along with other process and nonprocess wastes) to a collection pond. Equipment-cleaning waste waters are also discharged to this pond.

The principal nonprocess waste waters are boiler and cooling pond blowdowns. In addition, there is a hot-water-sump overflow. The hot-water sump is used as a collection point for recycled press cooling water. Contaminants in these wastes are suspended and dissolved solids.

End-of-pipe treatment at this plant includes pH control and the lagooning of all effluents, both process and nonprocess. The waste waters, after pH adjustment, are directed to the 11,000 cubic meter (3 million gallon) collection and storage pond. The residence time in this pond is approximately four days. Settling of suspended solids and the reduction of both COD and oil occur during this period of time. From here, the waste waters are fed to a second pond. Water leaving the second

retention pond can be used for any of three functions. It can be used for irrigation on the company-owned farm acreage around the production facility (its primary function), it can evaporate, or it can percolate into the sandy ground below the pond. (The water table at this plant is approximately 76 meters (250 feet) below the surface.)

In addition to containment of all process and nonprocess waste waters, all storm runoff from within and around the plant confines is directed to and contained in these lagoons.

Plant B

This plant, located in a rural area, started operating in 1964. Plant-owned ground is now almost entirely utilized by processing and warehousing buildings, parking lots, and waste water treatment facilities.

The facility produces passenger tires and heavy off-the-road tires. Production rates are currently running at 24,000 passenger and 2,000 off-the-road tires per day.

Water for all plant uses, including makeup for the cooling towers, boiler and various dipping solutions, is supplied by the municipality.

The principal process waste waters from this plant are: water and steam leakages, runoff from the process oil storage area, and discharges from wet air-pollution control equipment.

Water and steam leakages occur in the press room of both the passenger-tire and truck-tire facilities. These streams become contaminated with oil scavenged off machinery parts and the floor. Runoff from the oil storage area is continuous due to the placement of a steam blowdown pipe nearby; oil is scavenged from the area and becomes entrained with the condensate waste water stream.

Wet scrubbers are used to control air emissions from the compounding area and from the green tire painting area. Collectively, these scrubbers represent the largest single discharge in the plant. Contaminants include COD and suspended solids, as well as some oil matter.

Maintenance and housekeeping practices at this plant are directed at keeping leakage at a minimum and well contained. Runoff from the process oil-storage areas is pretreated in a baffled oil separator chamber before flowing to the end-of-pipe treatment facilities. The separator unit effectively removes oil from the small volume of water in the influent.

Water discharged from air pollution equipment passes into the plant's endof-pipe treatment facility untreated.

The principal nonprocess waste waters are boiler and cooling tower blowdowns, and water treatment wastes; these are segregated from the process

waste waters and are discharged, without subsequent treatment, into the storm drainage system.

In addition, there are blowdowns from various presses throughout the plant; these contain COD, suspended solids, and dissolved solids.

End-of-pipe treatment at this plant involves the use of two lagoons. The wet scrubbers and steam blowdowns flow into the first lagoon, which is used to separate settleable solids and separable oil. This pond has a surface area of 0.21 ha (0.52 ac) and a baffled effluent weir. Wet scrubbers, and some once-through cooling water flow to the second lagoon. This has approximately 0.30 ha (0.74 ac) of surface area and is also used to remove separable solids and oil from the influent.

Plant C

This production facility consists of two plants, the older of the two dating from 1945 and the newer one coming on stream within the last decade. The facility is located in an industrialized area on the fringes of an urban center. Most of the land within the plant boundaries is occupied by production buildings and by the necessary auxiliary buildings, waste treatment facilities, and parking areas. The facility produces only passenger tires (both bias ply and radial). Raw material consumption is approximately 349,000 kilograms (770,000 pounds) per day. Exact unit production rates are unknown, although the figure is known to be well above 20,000 units per day.

The principal process waste waters are water and steam leakages, overflow from various sumps, and runoff from oil storage areas. Water leakages occur throughout the plant wherever there is water-cooled machinery, such as mills and Banburys. Water and steam leakages occur in the press area due to leaking seals, failing bladder bags, and leakages in the hydraulic water system. The process waste waters scavenge oil and solid materials, which flow to the nearest drain. Oil and solid material accumulate on the floor and in the various machinery basins due to dripping and leaks from the Banbury dust rings, mill and pump oil seals, open gears, and the hydrualic water system. Runoff from oil storage areas occurs during rainstorms and washdowns, and is another source of oily process waste water.

This plant at one time had a process waste water discharge of soapstone solution. After extensive studies showed that this solution caused excessive BOD and total solids in the waste water, this discharge was eliminated. The current practice is to recycle this solution.

Wastewater streams resulting from the use of other solutions in the plant, such as the latex dip, have also been eliminated. These streams are dumped into a sump, which is periodically emptied into drums and sent to a landfill site.

The principal nonprocess waste waters are boiler and cooling tower blowdown, once-through tread cooling water, and water treatment wastes. In

all cases, dissolved solids are a problem, and suspended solids will be a problem in the water treatment waste and boiler blowdown.

Process waste waters and all the nonprocess waste water (with the exception of boiler blowdown) are combined and then directed to a primary treatment facility. This treatment facility consists of two settling basins, operating in parallel. Each provides 24 hour retention for the waste streams. Settleable solids are removed periodically (approximately every two years), and floating oil is removed by a belt filter. Boiler blowdown and sanitary wastes are treated in a package extended aeration sanitary wastewater treatment plant. All treated waste waters are discharged to the river.

Plant D

This plant, started up in the early 1940's, is located in an urban, industrialized area. It has recently undergone extensive modifications, and, therefore, production levels are not well established. However, past data indicate that the plant is producing 22,000 passenger, truck, and tractor tires per day. The plant also produces camelback. Raw material consumption is in the neighborhood of 840,000 kilograms (1.85 million pounds) per day.

Raw water is supplied by the municipality and from company-owned deep wells. The city water is used to supply domestic and air conditioner cooling needs. The wells supply once-through cooling water, cooling tower makeup, boiler feed water, and processing solution makeup.

The principal process waste waters from this plant include: water leakages, steam leakages, a weekly washdown of the soapstone recirculation system, equipment and floor cleaning washdowns, and minor runoff from the oil storage area.

Water leakages arise from the oil seals and open gears on mill calendars and pumps and from the hydraulic water system used in the Banburys and presses. Steam leakages occur in the press room from broken or leaking seals and failing bladder bags. Both types of leakage are heavily laden with oil picked up from the seals and from lubricating oil drippings. The soapstone recirculation system is cleaned out once a week, and the effluent has high BOD and suspended solids loadings. The floors are cleaned with an automatic sweeper that uses a soapy water solution as a cleaning agent. Drainage from this sytem also has a high BOD and suspended solids loadings. Steam cleaning is used for small machinery parts, and the discharges are significantly contaminated with oil.

Water and steam leaks in the press area are pumped to an oil separator, where the floating oil is removed an disposed of by an outside contractor. Water leakages in the mill area are kept at a minimum by careful housekeeping and maintenance practices, and do not appear to be a serious problem. Runoff from oil storage areas is collected in sumps, which are pumped out on an "as required" basis.

Floor-cleaning machinery discharges and steam-cleaning discharges flow into the sanitary sewer.

The principal nonprocess waste waters are boiler and cooling tower blowdowns, water treatment wastes, and once-through cooling water. In the first three cases, dissolved solids constitute a problem. Boiler blowdowns and water treatment wastes may also contain high concentrations of suspended solids, depending on the treatment process being used. COD and pH may also be problems.

Ther is no end-of-pipe waste water treatment facility which covers the entire process waste water stream. Some nonprocess waste water and the weekly dump of the soapstone slurry are directed to a holding basin for removal of settleable solids before discharge.

Plant E

This facility which was started up in 1920, is a sprawling complex occupying 25 major buildings and more than 74 acres of ground. Although it is located in a very congested urban area, the plant boundaries enclose approximately 13 acres of open ground.

The plant was originally set up to produce many rubber products, including tires, belting, an inner tubes. However, with the passage of time and because of specialization, production of all rubber products with the exception of tires has been discontinued. Current production levels are 10,400 passenger tires per day and 4,400 truck tires per day. Total raw material consumption is 210,160 kilograms (462,900 pounds) per day.

Production facilities are located in three buildings. The Banburys and mills of the compounding operation and the presses of the molding and curing operations are located in separate buildings (Banbury and Press Buildings). The mills, extruders, calendars, etc. of the tread and bead formation lines and of the fabric-coating operations are all located in a large building (Rubber Mill Building) located between the compounding and curing buildings. The buildings are interconnected so as to approximate a continuous production line. Fabric is shipped to this plant pretreated, and no additional dipping operations are preformed.

The plant has two separate sources of raw water supply: well water and municipally supplied water. The well water is used primarily for cooling tower makeup, and the municipal (city) water is used as boiler makeup, after treatment. The city water is also used in making the soapstone and other solutions used in tire manufacture.

The principal process waste waters include water and steam leakages, steam cleaning, and wet air-pollution equipment discharges. Water leakages arise from water-cooled machinery, such as mills, Banburys, tread extruders, and tread cooling tanks. In addition, water can escape from the hydraulic water system used in the Banbury and press areas. Water and steam leakages occur in the press building due to broken seals and failing bladder bags. These waste water streams are heavily laden with oil picked up from the seals and from floor areas and basins.

Machinery parts such as gears and bearings are cleaned with steam, and the resulting wastes contains both oil and suspended solids. Grinding operations within the plant are equipped with wet particulate collectors. Effluents from these collectors are small in volume but contain a high concentration of heavy rubber as suspended particules. Zinc and chromium are used as corrosion inhibitors and will therefore be present in the collector discharge.

Leakages, both steam and water, are collected in two sumps, one located in the press building and the other in the rubber mill building. These sumps separate the oil, and the resulting underflow is released to a sanitary sewer. Sanitary sewers within the plant are connected to the municipal sanitary sewer system and eventually to the municipal waste-water treatment plant. Oil from the sump is removed periodically by maintenance personnel.

Steam cleaning of machinery parts is carried out in a non-congested outdoor area of the plant. Curbing and concrete flooring are used to direct the waste waters into three small basins connected in series. The area is supplied with a roof to prevent storm water from diluting the wash water and upsetting the settling operation. Storm runoff from this area is directed into the storm-water catch basins. These catch basins act as gravity separators, allowing the separable suspended solids to settle out and oil to float to the surface. The effluent from the basin discharges into the sanitary sewer. Solids and oil are removed from these basins periodically.

The effluent from the wet particulate collectors flows into a set of similar settling basins, where most of the solids are settled out. The effluent then discharges into the sanitary sewer. These basins are equipped with automatic solids-removal equipment.

All solids and oil removed from the various treatment facilities are containerized and disposed of by contract hauler to a landfill.

The principal nonprocess waste waters are boiler and cooling tower blowdowns, and water treatment wastes. In all cases, dissolved solids are present in the waste water, generally at high concentrations. Boiler blowdowns and water treatment wastes also contain high concentrations of suspended solids. The water makeup for the cooling tower which supplies cooling water to the press building is treated with a corrosion inhibitor containing chromium and zinc, and these metals are present in the blowdowns.

At this plant, there is no end-of-pipe treatment facility. All contaminated process and nonprocess waste waters (with the exception of the main cooling tower) are discharged to a municipal treatment facility.

Plant F

This production facility, built in 1928, is located in a minor urban area, on a large (more than 280 hectacres (700 acres)) plot of ground,

of which the actual production facility occupies only a small proportion.

Production lines include passenger tires, truck tires, inner tubes, flaps, bladders, and camelback. The plant, as currently designed, is divided up into separate product unit buildings for each end product. Daily production rates are currently running at 40,000 passenger and truck tires, 36,000 inner tubes, 13,000 bladders and flaps, and 27,000 kilograms (60,000 pounds) of camelback. Daily raw material consumption is 681,000 kilograms (1.5 million pounds). This plant utilizes river water for production and utility purposes and city water for domestic purposes.

The principal process waste waters from this plant include: water and steam leakages and overflows, runoff from process oil-storage areas, soapstone solution spillages, and wash downs and runoff from process or storage areas.

Water leakages occur at various water-colled machinery units, including mills, Banburys, tread extruders, and tread cooling tanks. In addition, water can escape from the hydraulic water system used in the Banbury and press areas. Water and steam leakages occur in the press area due to broken seals, failing bladder bags, and overflows from the collection pumps. Oil and solid matter which have collected on the floor are scavenged by these various water streams and are carried untreated to the drainage system. Oil on the floor spaces is lubricating oil which has dripped or leaked from oil seals on mills, pumps, and like equipment, from open gears, from gear boxes and from the hydraulic water system. Oil and solid materials result from leakages at the Banbury dust and oil rings.

Soapstone solution which has spilled and dripped on the floor is washed down periodically and enters the drainage system untreated. Typical contaminants are BOD, suspended solids, and dissolved solids.

Washdown water and storm runoff are allowed to drain through the process oil-storage area, where oil is scavenged and carried to the drainage system. Before discharge to the sewer, this stream is pretreated in a baffled sump, where oil is separated, removed by a belt filter, and disposed of at a sanitary landfill. The sump is baffled, but provides no excess capacity for oil separation during a storm runoff.

The aforementioned process waste waters are mixed with nonprocess waste-waters in the drainage system. The nonprocess waste waters include oncethrough river water, boiler blowdown, and a small overflow from the numerous small pump sumps located throughout the plant.

End-of-pipe treatment facilities consist of a two-stage detention basin. The primary facilities provide approximately 2,000 square meters for bottom and surface removal of separable materials. During dry-weather flow the surface loading is 49,000 L/day/sq m (1,200 gal/day/sq ft) which is too high for effective treatment of waste water of this character. It is estimated that the facilities provide little or no

treatment whatsoever during periods of significant runoff. The primary facilities are followed in series by a pond baffled down the middle to retain floatable materials. Some additional settleable materials are also contained, but no facilities are provided for removal of floatable or settleable materials except on "as required" basis.

The secondary pond provides a theoretical detention time of twelve hours during dry-weather flow. However, this is significantly reduced by short circuiting attributable to the location of the inlet and outlet connections. Surface loading on this pond is adequate for removal of separable materials during dry-weather flow as well as during storm weather runoff conditions. However, the surface of the pond is subject to wind turbulence, which may remix the separated floatable materials.

Plant G

This production facility, built in 1928 is located in a highly congested, highly industrialized suburban area. Built and originally operated by another company, it was bought by the current operator in the 1930's and converted to tire manufacture. The facility produces passenger and truck tires. Daily production rates are currently running at 18,300 passenger tires and 1,150 truck tires. Raw material consumption is over 246,000 kilograms (541,000 pounds) per day.

The plant occupies approximately 28 hectacres (70 acres) of ground, with most of the land occupied by production and warehousing buildings. Because of the industrial development around the plant, there are no foreseeable plans for expansion at the current facility.

Well water is the only source of raw water supply to this plant, and is used for all plant water needs.

The principal process waste waters from this plant are water and steam leakages, and washdown and runoff from the machine shop area. Water leakages occur in the press are due to broken or leaking seals and failing bladder bags. These process waste waters scavenge oil and solid materials as they flow to the drains. Oil and solid materials accumulate on the floor and in various machinery basins due to drippings and leaks from the Banbury dust rings, mill and pump oil seals, open gears, and the hydraulic water system. In the machine shope area, steam used for cleaning of parts and runoff from painting and washdown operations is allowed to enter the storm drain; these waste waters may be contaminated with both oil and solid material.

Runoff from the oil-storage is not a problem in this plant, because the drain in this area has been surrounded by a curb which prevents normal spills from entering the sewer system. In addition, there is a straw filter covering the drain inlet. Oil that spills in this area is pumped into a special storage tank which is periodically emptied; this waste oil is sent to a landfill site.

Both process and nonprocess waste waters flow to a common sewer, where they are discharged to the municipal storm sewer. Before leaving the

plant, all waste waters must flow through a shredded plastic filter which retains floatable oil. This filter is replaced periodically. The oil trapped behind the filter is also removed periodically.

Plant H

This facility, built in 1945, is located in highly congested and highly industrialized area. Essentially all of the plant-owned land is utilized for production and warehousing facilities, utility systems, and waste water treatment facilities. Expansion of the current plant would necessitate the leasing of land from adjacent ladowners.

The facility produces truck tires, industrial and farm tires, giant off-the-road tires, and various other minor products including bladders and rubber gaskets for the curing presses.

Current production levels for the major products are 6,850 truck tires and 2,430 industrial, farm and giant off-the-road tires per day.

Sources of raw water include surface water from a nearby river and municipally supplied water. Surface water is used as the primary source of once-through cooling water and for makeup to the cooling tower and other recirculating water systems. City water is used as for boiler feed water and also as a backup for the surface water in recirculating water systems.

The principal process waste waters are from water and steam leakages from presses and mills. These leakages occur at the oil seals of mills, at the hydraulic water system, and at the curing presses. The leakages scavenge oil and solids spilled in press and mill basins due to open bearings and lubrication of machinery parts.

The principal nonprocess waste waters are the overflows and blowdowns from various recirculating water systems, the once-through cooling water, boiler blowdown, and water treatment wastes. Contaminants in these waste waters include suspended and dissolved solids; these waste waters also require pH adjustment.

Whenever possible, oil that leaks or spills onto the floors or basin areas is collected. This oil either is drummed and sent to a sanitary landfill or is filtered and reused. Plant engineers are currently examining the feasibility of using this oil as a fuel admixture in the boilers. With the oil on the floor kept at a minimum, less can be scavenged by water or steam contact. There is however, no treatment at this plant for the oily wastewaters that do occur; they would be discharged with either once-through cooling water or the utility waste waters.

There is no end-of-pipe treatment for the once-through (non-contact) cooling water; except for oil picked up due to leakages and spills this water is uncontaminated, and discharges back to the river. Discharges from the other utility systems, such as boiler blowdown, cooling tower blowdown, and water treatment wastes are directed to an effluent basin,

where settleable solids are removed. The surface loading is 600 L/day/sq m (15 gal/day/sq ft) and the theoretical detention time is 24 hours. There is no provision for continuous removal of solids or oil. Discharges from the effluent basin are directed via a sanitary sewer system to a municipally operated treatment plant.

Plant I

This plant, built in the late 19th century, is now involved in the manufacture of inner tubes, valves, flaps, and similar items associated with automobile tire applications. Raw material consumption is approximately 75,000 kilograms (165,000 lbs) per day. This amounts to an equivalent of over 50,000 inner tubes per day.

The production facilities occupy a multi-story building in the downtown area of a major city. There has been no expansion at this plant for the last fifty years. Because of the extremely tight land situation and because of the relatively stable tire-tube market, no expansion is planned in the foreseeable future.

All the raw water used in this facility is provided by the city.

Principal process waste waters are water and steam leakages, and the washdown of dusty areas within the plant. These streams become contaminated with oil and dust that is scavenged from floor and machinery areas. These waste waters streams flow into a sewer and are combined with nonprocess waste waters before discharge from the plant. Nonprocess waste waters include once-through cooling water, cooling tower and boiler blowdowns, and water treatment wastes. Suspended solids will be present in substantial quantities in the blowdowns and water treatment wastes.

The city sewers are combined sewers; consequently, domestic, process, and nonprocess waste waters are mixed and treated in the municipal waste water treatment facility.

The housekeeping practices in the plant are unique. Spillages of soap and soapstone solutions do occur, but the quantities are so slight that they tend to evaporate on the spot; soapstone solution is neither dumped nor recirculated. In processing areas, water is not used for washdown. Dust is such a problem (due to thy use of soapstone in dry form) that any attempt to use water for washdown merely complicates the problem.

There were no waste water treatment facilities operating at the plant at the time of the visit. The upgrading of air quality within the plant has completely occupied the attention of the engineering staff, thus relegating concern for water effluent quality to a secondary position.

Synthetic Rubber Plants

Plant J

Emulsion styrene-butadiene (SBR) and acrylonitrile-butadinee (NBR) synthetic rubbers are produced at this plant. The annual production capacity is 390,000 kkg (430,000 tons) of SBR and approximately 10,000 kkg (11,000 tons) of NBR. The plant is located in an industrial area with land available for expansion.

Both SBR and NBR are produced by emulsion polymerization processes. The monomers are shipped into the complex from adjacent plants. The SBR crumb is produced in non-extended, oil-extended, and carbon-black-extended forms, while the NBR is produced in non-extended form only. The crumb rubber is used principally as tire rubber. There are sixteen coagulation and finishing lines in the plant.

The plant's intake water comes from two sources. River water is used for cooling tower makeup, crumb rubber washing-slurrying, and area washdown. Plant well water is softened and then used for solution preparation. The plant does not have its own steam generating plant and purchases steam from an adjacent facility.

The main process waste waters are generated at monomer recovery, crumb coagulation, and rubber washing operations. Decant water from the monomer decant system is recycled in part to the crumb slurrying operation. The remainder, containing styrene and acrylonitrile, is discharged to the process sewer system and has a significant COD. The coagulation liquor overflow is a brine-sulfuric acid mixture, with a low pH, high total dissolved solids, and moderate COD. The crumb slurry overflow contains COD, crumb rubber particles as suspended solids, and oil (when oil-extended forms are produced). The crumb-laden slurry overflow and the overflow of coagulation liquor pass through crumb settling pits where the crumb separates and is removed periodically by a scoop. The cleaning of the crumb pits results in a temporary upset as the settled crumb is disturbed and re-suspended. This results in poor effluent quality from the pits for a short period.

The cleanup wastes from the latex vacuum and steam stripping units are another process waste water source. This waste water is characteristically high in COD and suspended solids, and contains uncoagulated latex. The units are cleaned periodically and large volumes of water are used in this operation. The resulting waste waters are passed through settling sumps, where rubber solids settle out.

Clean-out waste waters from reactors and holding tanks are also produced on an intermittent basis. These waste waters, containing COD and suspended solids, both as rubber solids and as uncoagulated latex, are also passed through settling pits. Spent caustic soda scrub solution used to remove inhibitor from butadiene prior to its polymerization, is bled into the plant effluent; this waste stream has high COD, pH, alkalinity and color, and contains some phenols. Its lfow rate, however, is very low.

The carbon black storage facilities, consisting of railroad unloading equipment, a storage hopper, and slurrying equipment, generates a waste-water which is laden with fine carbon black particles. This waste water

is the result of the washdown and cleanup of carbon black spills and air-borne fallout. These waste waters pass through two settling pits, which operate in parallel. When one pit is full of carbon black waste-water, the waste water is allowed to settle and the second pit is filled. The settling pits achieve satisfactory clarification of the waste water.

The utility waste waters consist of cooling tower blowdown and water softener regeneration wastes. (There is no boiler blowdown, since the plant's steam is purchased.) One cooling tower has a very low blowdown rate, since a high proportion of the tower's makeup is steam condensate. The other cooling tower has a normal blowdown rate and generates waste water containing chromium, zinc, and othe/heavy metal ions.

The plant's effluent treatment system consists of chemical coagulation and primary settling, followed by an aeration lagoon and a settling lagoon. The primary settling facility and the sludge handling system are shown in Figure 7. In the chemical coagulation process, the pH of the influent waste water is first adjusted using sulfuric acid and caustic soda. Cogulation chemicals (alum and polyelectrolyte) are added, together with clay. The latex and fine suspended solids coagulate around the clay, which causes the coagulated solids in the primary clarifier to sink. The solids from the primary clarifier are thickened and pressure filtered, using a lime slurry and filter aid. The filter cake is hauled away by truck to a landfill. The thickener supernatant is returned to the head end of the plant, and the filtrate is discharged to the aeration lagoon. The plant effluent quality is good:

COD	325 mg/L
BOD	25 mg/L
TSS	30 mg/L

The high residual COD concentration is typical of the high biological resistance of the waste water components. The plant currently is conducting pilot studies to investigate the feasibility of using activated carbon to reduce the residual COD. The results to date indicate that a final effluent COD of 130 mg/L could be reached, but the company concluded that the costs to implement this system would be prohibitive.

Plant K

The plant complex consists of emulsion and solution stryene-butadiene rubber (SBR) production facilities. The annual production capacity of emulsion SBR is 2,000,000 kkg (2,200,000 tons) and of solution SBR is 130,000 kkg (144,000 tons). The complex is located in an industrial area with virtually no land available for further expansion.

The emulsion crumb rubber is produced in non-extended, oil-extended, and carbon-black-extended forms. The emulsion rubber processing plant is arranged into essentially two parallel operations; each operation consists of a solution preparation building, a polymerization area, a coag-

FIGURE 7

PLANT J: CHEMICAL COAGULATION AND CLARIFICATION PLUS SLUDGE HANDLING SYSTEM FOLLOWED BY BIO-OXIDATION TREATMENT

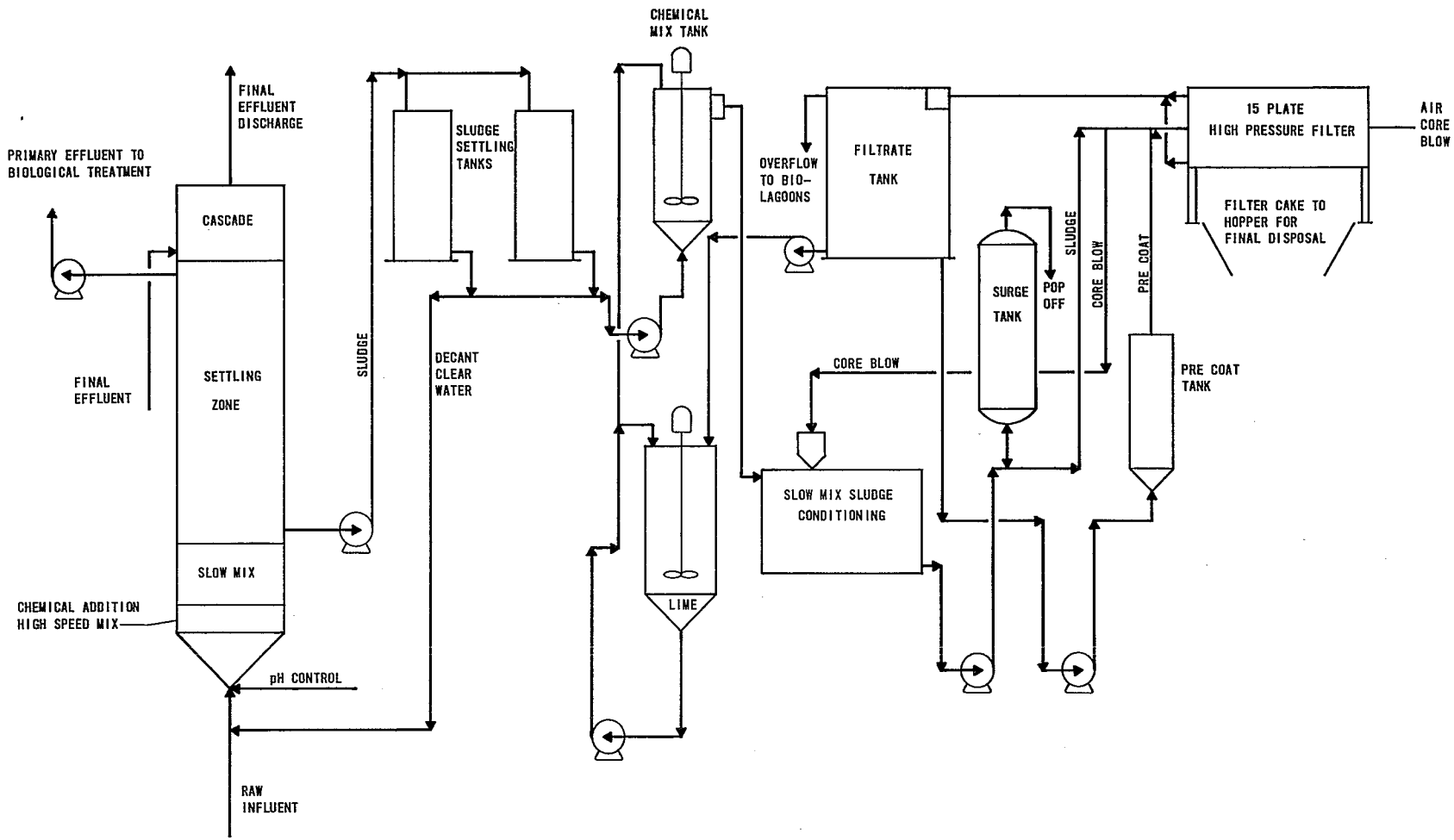

ulation and finishing building, and a monomer recovery complex. The solution crumb rubber is produced also in non-extended, oil-extended and carbon-black forms. The solution rubber processing facilities are similarly divided into two parallel units; each unit consists of a polymerization area, a crumb slurrying and finishing building, and a solvent and monomer recovery complex. The solvent used is hexane.

The plant water supply is from on-site wells. The boiler feed water is subjected to hot lime softening and normal boiler feed treatment chemicals. The cooling tower makeup is treated with corrosion inhibitors, anti-sealing agents, and slimicides. The process water used in emulsion rubber production is zeolite softened. Untreated well water is used for slurrying, rinsing, and washdown.

The principal emulsion process waste waters are the coagulation liquor overflow, the crumb rinse overflow, and the monomer recovery streams. The coagulation liquor is a sulfuric acid-brine mixture with a low pH, high total dissolved solids, and moderate COD. The crumb rinse overflow contains floatable crumb rubber as suspended solids. In addition, the slurry overflows have high total dissolved solids and moderate COD.

The coagulation liquor and crumb slurry overflow pass through settling pits, where the rubber solids separate. Under normal operation, the separator pits work well, but they are not cleaned frequently enough, and short-circuiting occurs. Furthermore, during the cleanout operation the pit is distrubed, and the once-separated rubber escapes into the effluent. Some pits contain an oil layer because baler hydraulic fluid or extender oil leaks onto the floor and is washed down into the settling pit.

The waste waters from the monomer recovery area are characterized by high COD and suspended solids. These waste waters originate at monomer decant systems and cleanup operations, and contain uncoagulated latex. The wastewaters from the periodic cleaning of the monomer recovery stripping columns contain high concentrations of COD and of latex and rubber solids. These waters pass through settling sumps to separate the rubber solids and the floating oils. These pits are also cleaned out periodically.

The caustic scrub solution is discharged to the final effluent when it becomes saturated with inhibitor. This waste water is of very low flow (less than 1 gpm), but has high COD, pH, alkalinity and color. When the latex storage and the blend tanks are cleaned, the latex-laden rinse water can be used for latex blending if its solids content is greater than 2 percent. Tankage rinse waters with rubber solids levels of less than 2 percent are discharged to the plant effluent. The major contaminant in this water is uncoagulated latex.

The carbon black slurrying area is equipped with a settling pit which receives spillages and washdown waste waters. The carbon black settles out, and the waste water overflows at a very low flow rate into the final effluent. The settling pit is cleaned out periodically with a vacuum truck.

The solution rubber process waste waters are very similar to those of other solution rubber production facilities. The principal streams originate at the crumb slurrying operation and the solvent-monomer recovery areas. The crumb slurry overflow has moderate COD, suspended solids, and total dissolved solids. It passes through a settling sump, where suspended solids are removed. The waste waters from the solvent and monomer recovery areas are stripped condensates and decants, and are characterized by moderate amounts of COD and floating oils.

The utility waste waters are boiler and cooling tower blowdown and water treatment wastes. The boiler blowdown has high total dissolved solids and a high pH. The cooling tower blowdown contains high total dissolved solids and moderate levels of chromium and zinc from chemical inhibitors. The spent lime slurry from the hot lime water treatment system exhibits a high pH and suspended solids level. The lime slurry settles out in the plant drain and must be mechanically removed at periodic intervals. The waste from the zeolite softener regeneration is a concentrated brine solution with high total dissolved solids.

The waste water treatment system consists of air flotation clarification and biological treatment (refer to Figure 8). The waste water first passes through a mechanical bar screen which removes large rubber solids, and is neutralized to pH 7.0 and dosed with coagulant and flocculant aids in a rapid-mix tank. The waste water then passes through a flocculator tank and into the primary clarifier, whre a slip-stream laden with air is released near the bottom of the unit. The rinsing air bubles carry the suspended solids and oil-type contaminants to the surface, where they are skimmed off. The clarified effluent flows into an aerated lagoon, equipped with six aerators, where it is retained for 24 hours.

Effluent from the aerated lagoon is pumped to the secondary air flotation clarifier, where biological solids are removed. Operations include rapid mix of coagulation chemicals, flocculation, and clarification. The primary and secondary sludges are pumped to an on-site sludge lagoon for dewatering and drying. Studies are being conducted to dispose of this sludge by off-site landfill or via incineration. The treatment plant produces a high-quality effluent. Pollution parameters which are still present at substantail levels after treatment are total dissolved solids and COD. The residual COD underlines the inherent biological resistivity of some of the waste water constitutents.

Plant L

This plant has SBR, polybutadiene, resin, and oil-additive production facilities. In addition, there is a rubber compounding facility which produces sheet rubber as a customer service. The annual production rates are:

Cold-emulsion SBR	120,000 metric tons	(133,000 tons)
Hot-emulsion SBR	3,700 metric tons	(4,100 tons)
Solution-type polybutadiene	52,000 metric tons	(58,000 tons)
Solution SBR	10,000 metric tons	(11,000 tons)

FIGURE 8

PLANT K: AIR FLOTATION AND BIO-OXIDATION WASTEWATER TREATMENT FACILITY

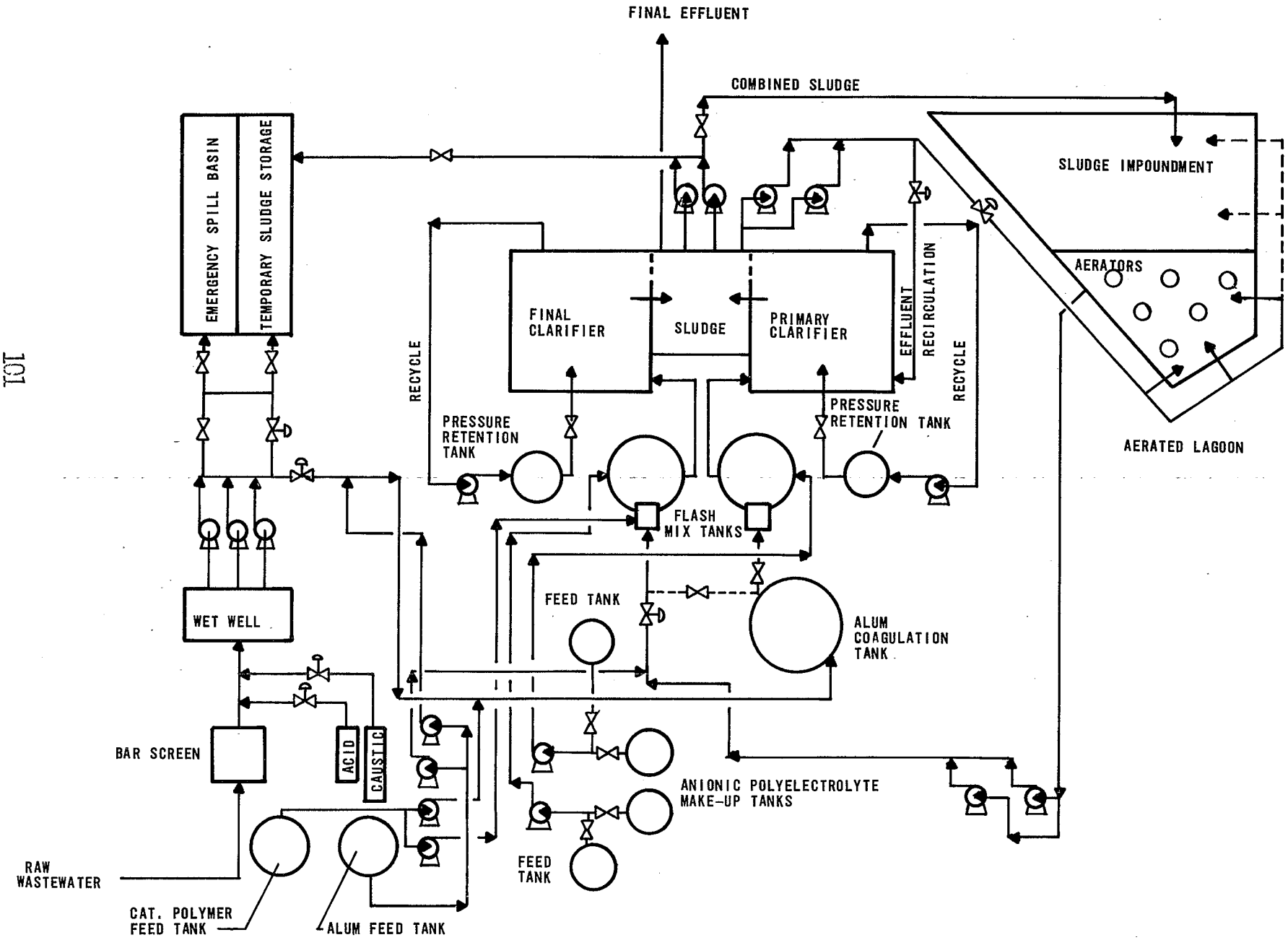

The plant is located in a rural area with land available for expansion. Emulsion rubber production started in 1943, solution type polybutadiene in 1960, and solution type SBR in 1963.

The cold-emulsion type SBR is produced in non-extended, oil-extended, and carbon-black-extended forms. It is used primarily in tire manufacture. This type of emulsion SBR is similar to that produced at the other plants described in this section. The process for hot-emulsion SBR is a higher-temperature polymerization and is non-extended; this product is used primarily for electrical wire covering. The solution type polybutadiene is produced as non-extended and oil-extended rubbers and is used primarily in tire manufacture; toluene is the solvent. Solution SBR is non-extended and has several end uses. The butadiene used in the plant is received by pipeline from a neighboring plant, and the styrene is shipped in by tank truck.

The plant's water supply consists of well water. The plant does not have steam generating facilities but purchases steam from an adjacent plant. The well water is treated with corrosion inhibitors, slimicides, and dispersants for cooling tower makeup and is softened to provide process water for preparation of the emulsion rubber solution.

The process waste waters from emulsion rubber production originate principally in two areas: crumb slurrying and monomer recovery operations. These waste waters are typical of emulsion rubber production facilities. The slurry overflow is passed through a crumb pit to separate the crumb rubber fines. The monomer strippers are cleaned periodically. The vacuum stripping vessels and steam stripping columns are flooded with wash water, and the residual latex and rubber solids are discharged with the wash water. The units are finally rinsed, producing more waste water with additional suspended solids.

Both of the solution type rubbers are produced by similar processes. The main process waste waters are the crumb slurry overflow and the solvent-monomer recovery wastes. The slurry overflow is passed through a pit, where the crumb rubber is separated and periodically removed. As is the case with all the plants visited, the crumb pits are not cleaned regularly, and during cleanining the crumb is disturbed and escapes the pit. The waste waters from the solvent-monomer recovery area are condensates from monomer decant systems and solvent distillation condensates. They are characteristically high in COD, BOD, and total dissolved solids.

The plant's utility waste waters are cooling tower blowdown and zeolite softener regeneration wastes. The blowdown has high chromium and zinc concentrations, from the corrosion inhibitor. The softener regeneration waste is a strong brine solution and therefore has a high total dissolved solids concentration.

The plant's waste water treatment facilities consist of settling ponds, followed by aerated and stabilization lagoons. The plant's final effluent is treated with alum and polyelectrolyte to obtain proper coagulation of latex solids and fine rubber crumb particles.

The waste water flows through two parallel sets of two settling ponds each, where the settleable solids and oils separate. The waste water then flows through two further settling ponds in series. The total detention time in the six settling ponds is four days. Troublesome oil is skimmed from the ponds. The waste water then passes to a mechanically aerated lagoon, which provides approximately three days of detention. The aerated lagoon effluent passes through two oxidation ponds, which stabilize the waste waters and settle the biological solids. The total detention time in the oxidation ponds is approximately thirteen days.

Although overall treatment provided by the facilities is good, the effluent quality (BOD particularly) does not meet the State requirements. It has been established by analyses that the stabilization ponds are not producing the soluble BOD removals that were expected, but the cause of the problem has not been determined. There are indications that the effectiveness of the ponds is dependent on the water temperature (and, therefore, the time of the year) but this hypothesis has yet to be confirmed.

Plant M

The total plant complex consists of a butadiene plant and a polybutadiene production facility. The butadiene plant started production in 1957 and the polybutadiene facility in 1961. The polybutadiene production facility, which uses butadiene as a feed monomer, has a capacity of 85,000 metric tons per year and is adjacent to the butadiene facility. The complex is located in a rural area with good potential for expansion and land acquisition.

The polybutadiene is produced by a solution-type polymerization process using butadiene as the feed monomer and hexane as the solvent. The crumb polybutadiene rubber is used principally as a tire rubber. In addition, a high-grade variety is used as an ingredient in the manufacture of impact-resistant plastic. The rubber is not oil- or carbon-black-extended.

The polybutadiene plant has two sources for water supply, well water and river water. The well water is used primarily for boiler and cooling tower makeup, while the river water (after clarification, filtration, and softening) is used in the crumb slurrying operation and for general plant cleanup.

The principal process waste waters originate in the solvent-monomers reclaim area and in the crumb slurrying operation. The waste waters produced in the reclaim area originate from several operations: solvent recovery, monomer recovery, and feed drying. The major component of these waste waters is produced by a decant system fed from the solvent and monomer stripping operation. This waste water is relatively clean, its only contamination being due to hexane at saturation solubility. The other waste water streams from the reclaim area have very low flow and are essentially innocuous with the exception of dissolved hexane.

Impure recovered butadiene monomer is returned to the butadiene production plant for purification. Heavy slops (oily wastes) produced in the hexane recovery operation are sent to the butadiene plant for disposal or are used as a waste fuel. The other major process waste water, the crumb slurrying overflow, is laden with rubber crumb in the form of suspended solids. The suspended solids are significantly reduced by in-plant screening and clarification in a pit.

At least one finishing line recovers the solid rubber product directly from the rubber cement. No water rinse system is used. The "finishing machine" takes cement and produces material ready for baling and packaging. This machine was not seen, and presumably is some type of extruder for removing solvent. It obviously has a potential for reducing the effluent flow and loading attributable to the crumb rinse overflow.

There are two other process-associated waste waters. Spent caustic soda solution, from scrubbing of butadiene inhibitor (to prevent premature polymerization during storage and shipping), is batch discharged. This stream has extremely high COD, pH, alkalinity, and color, and contains phenols. The batch discharge is containerized in a pit and bled into the plant effluent at a very low flow rate. With such handling or pre-treatment, it poses no waste water problem.

The other waste water which should be mentioned results from frequent area washdowns. This picks up primarily crumb rubber and oils. The oils originate from leaks in baler hydraulic systems and leaks of pump seal oil. In solution-type polymerization, water must be eliminated from much of the process equipment. Oil is used to seal and lubricate the process pumps. The washdown waste waters contribute the major proportions of suspended solids, soluble organics, and oils in the final effluent.

The principal nonprocess waste waters are boiler and cooling tower blowdowns and water treatment wastes. The waste water characteristics of these streams are high total dissolved solids, and moderate COD, suspended solids, and pH. The cooling tower makeup is treated with a corrosion inhibitor containing chromium and zinc. These metals appear in the cooling tower blowdowns.

The total effluent from the butadiene and polybutadiene plants passes through an oil separator and straw filter before discharge. Since the quantity and loading of the waste waters from the butadiene plant are far greater than those from the polybutadiene plant, no meaningful treatment data could be obtained. The raw waste water flow and loading of the polybutadiene plant were the lowest of any of the synthetic rubber plants visited.

It is planned to expand the synthetic rubber plant production facilities shortly. This expansion will approximately double the existing synthetic rubber production capacity.

Plant N

The plant complex consists of iosprene, polyolefin resin, polyisoprene, and polybutadiene production facilities. The complex was completed in 1962. Polyisoprene production capacity is 65,000 metric tons (72,000 tons) per year and the annual production of polybutadiene is 110,000 metric tons (122,000 tons). The complex is located in a rural area with expansion capability and undeveloped land of its own.

The polyisoprene is produced by solution polymerization with hexane as the solvent, using isoprene from the neighboring isoprene plant as feed monomer. Several types of polyisoprene are produced in this facility. Each type requires a separate production run on common processing equipment. The crumb rubber is used mainly for tire manufacture and is not oil or carbon black extended.

There are two polybutadiene lines which employ slightly different processing techniques. There is no significant difference in the overall waste water flows and loadings from these two processes. The polybutadiene is consumed principally in tire manufacture, and approximately 50 percent of the polybutadiene is oil extended.

The plant's water supply is river water. Process and boiler makeup water receives extensive treatment, consisting of coagulation, clarification, filtration, chlorination, and softening.

The main process waste waters are produced in the monomer-solvent reclaim area and the crumb slurrying operation. The waste waters generated in the reclaim area have low flow rates and, with the exception of saturation with solvent or monomers, are relatively clean.

Part of the recovered isoprene is sent in a slip stream to the isoprene production plant for purification. This procedure serves to blow down the accumulated impurities. Impure butadiene recovered from the polybutadiene plant is hauled from the plant as a waste. The crumb slurrying overflows are passed through settling pits where the crumb is trapped and periodically removed. Surfactants are added to the crumb-water mix during the coagulation operation to prevent the crumb from agglomerating into masses which are too large. These surfactants enter the crumb slurry overflow.

One type of polyisoprene produces a crumb slurry effluent which has a considerably higher dissolved organic loading than the other polyisoprenes or the polybutadiene types. This difference is inherent in the chemistry of the process and is not a general or widespread problem in the synthetic rubber industry.

Area wash-down and cleanup is a major contributor of contaminants to the final effluent. Crumb screens used inside the processing areas are hosed down to remove coagulated rubber. The resulting waste water has high suspended solids levels and is passed through the crumb settling pits. Spent caustic solution from the inhibitor removal system is containerized and bled into the final effluent. It has the typical high, COD, pH, alkalinity, and color.

Typical utility waste waters, principally boiler and cooling tower blowdowns and water treatment wastes, are generated at this plant. Characteristics of these wastes are high total dissolved solids, with moderate COD, suspended solids, and pH. The cooling tower makeup is treated with a low chromium corrosion inhibitor. This produces chromium levels in the cooling tower blowdown that are less than one quarter of those associated with conventional cooling tower corrosion treatments.

The waste water treatment system consists of an equalization basin (four-day detention), a neutralization sump, with nutrient addition, followed by an activated sludge plant (refer to Figure 9). The waste activated sludge is first thickened and then pumped to a sludge drying basin on the plant property. The treatment plant gives very good BOD effluent levels (10 mg/L), however, the effluent COD level is considerable (250 mg/L). This is due to the biological stability of many of the waste water components such as the monomers and solvents, which, although generally considered insoluble, do have some solubility in water.

An apparent characteristic of the plant's waste water which can be attributed to the synthetic rubber production is foaming in the aeration basins and in the final outfall. This is apparently caused by excessive use of surfactants by the production personnel in the crumb rinse operation. Another problem is poor settling of the biological sludge in the secondary clarifier. Efforts were made to assist settling, and achieve additional COD removal, by adding activated carbon granules to the aeration basins upon which biological solids could nucleate. This did not produce satisfactory results. The current technique which is proving more successful is the addition of coagulation aids to the clarifier influent. This, however, is proving to be expensive on an annual-cost basis. A less frequent problem, but more serious, is an apparent high BOD slug loading, with associated toxicity, that unpredictably occurs in the plant influent. This problem is uncontrolled at present, but appears to originate with the production of either the polyolefin resin or one type of polyisoprene.

Plant O

The plant complex consists of polybutadiene, polyisoprene and ehtylene-propylene diene terpolymer (EPDM) rubber production facilities. The commissioning of all the production facilities occurred between 1967 and 1970. The annual production capacities are: polybutadiene 56,000 metric tons (62,000 tons), polyisoprene 50,000 metric tons (55,000 tons), and EPDM 25,000 metric tons (28,000 tons). The plant is located in a rural areas and has considerable land for expansion. Each of the three synthetic rubber products has its own production facility and is produced in a solution polymerization process. Polybutadiene rubber is carbon black extended. The principal end-use of the crumb rubbers is in tire manufacture.

The plant's water supply is well water. Well water is treated with corrosion inhibitors and slimicides for use as cooling tower makeup, and softened for use as boiler quality water.

FIGURE 9

PLANT N: ACTIVATED SLUDGE WASTEWATER TREATMENT FACILITY

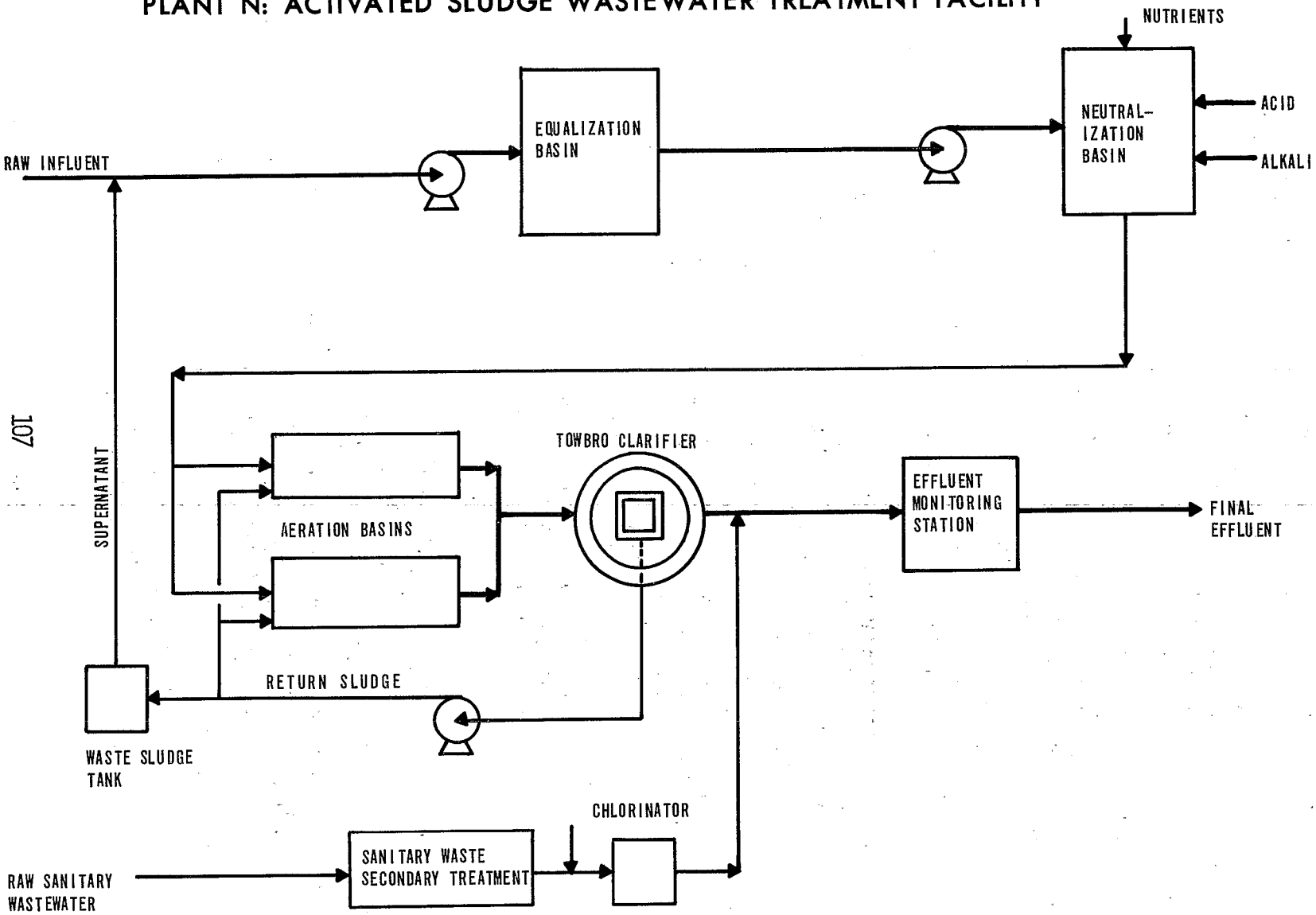

Principal process waste waters originate in the crumb slurrying overflow and presumably in the solvent, monomer, and reclaim areas. Carbon black added at the coagulation-slurrying stage is essentially trapped in the crumb rubber matrix. Carbon black spills and leaks pass through a settling sump and are allowed to overflow into the final effluent. The settled carbon black is removed by vacuum truck.

Extender oil that is not entrained in the rubber crumb can contaminate the slurry overflow waste water. It is understood that screens, with higher crumb removals than conventional equipment, have been installed in this plant. The butadiene monomer is inhibited and presumably there is an associated spent caustic scrub solution discharge. Area washdown and cleanup is on a shift-by-shift basis. Whenever possible, the material is cleaned up in such a manner to eliminate wastes from the waste water system.

The plant's utility waste waters are characterized by high levels of total dissolved solids and moderate pH. The cooling tower blowdown has high chromium and zinc content originating from the cooling tower corrosion inhibitors used.

The plant's waste waters are first passed through skimming and settling basins where the rubber crumb is trapped. The waste crumb rubber is removed every two to three months by dip bucket. The effluent from these pits flows into two 1.2 hectacre (3-acre) lagoons. The process effluent from the lagoons combines with treated sanitary, storm, and utility waste waters before entering first a 6.0 hectacre (15-acre) lagoon and finally a 12.0 hectacre (30-acre) lagoon before discharge to the receiving waters. The final waste water quality is good. COD, BOD, and suspended solids are at an approximate level of 50, 5, and 10 mg/L, respectively. This plant, however, is particularly fortunate in having considerable land for use as waste water lagoons. It is not possible for all synthetic plants to have the same or even comparable facilities.

Plant P

This plant produces styrene-butadiene (SBR) and acrylonitrile-butadiene (NBR) latexes. In addition, the plant produces polyvinyl acetate emulsions and hot melt adhesives. The annual production rates of the latexes are: styrene-butadiene latex 18,000 metric tons (20,000 tons), acrylonitrilebutadiene latex 3,000 metric tons (3,300 tons). The plant is located in a rural area with land available for expansion.

The butadiene latexes manufactured at the plant are made similarly utilizing equipment trains of a similar nature. The monomers are shipped into the plant by both tank car and tank truck. The latexes produced are used for carpet backing, dipped goods, and adhesives.

The plant's water comes from on-site wells. The water is treated in a dual-bed demineralizer to supply boiler quality makeup water and process water for solution preparation. The cooling tower water is treated with a corrosion inhibitor and algicide.

The principal process waste waters produced in the plant are generated by equipment cleanout, area washdown, and stripper condensates. Tank cars and tank trucks are rinsed with water and the contaminated water is discharged to the waste water treatment facility. These waste waters will contain monomers and uncoagulated latex. Reactors and strippers are cleaned of solid deposits with a high pressure watergun and then water rinsed. Blowdown tanks, filters, compound tanks, and storage tanks are rinsed with water. In all cases the waste waters discharged to the waste water treatment facility contain organic compounds and latex. Latex spills and leakages are first coagulated with alum, cleaned up in-place, and finally washed down. The washings are sent to the treatment facility.

Excess monomers are stripped from the latex with steam under vacuum. The vacuum is produced using steam jets and not vacuum pumps. The exc3ss styrene, or acrylonitrile, is condensed and discharged to a receiver. Although the receiver is periodically decanted and the condensed styrene or acrylonitrile drummed for disposal, styrene and acrylonitrile still enter the effluent waste waters. A caustic scrub solution is used to remove the butadiene inhibitor, which is bled gradually to the final effluent. Characteristics of this stream are high COD, pH, alkalinity, and color.

The plant utility waste waters enter the storm sewer system. The boiler blowdown has a low flow rate but high total dissolved solids. Demineralizer regeneration wastes are both acidic and alkaline and may potentially produce pH peaks. The cooling tower blowdown is high in total dissolved solids but, because the corrosion inhibitors used are chromium and zinc free, these heavy metals do not appear in the blowdown. The vacuum pump seal water is currently discharged on a once-through basis to the storm sewer system. This water picks up small quantities of organic compounds but has only a moderate COD concentration. Studies are being made to recycle the bulk of the seal water and discharge the blowdown only to the treatment facility.

The plant's treatment facility consists of chemical coagulation and clarification followed by activated sludge secondary treatment. The final effluent after secondary treatment is discharged to a municipal treatment plant. All the latex plant process waste waters are discharged to two coagulation pits. They operate so that one pit is being filled with waste water, while water in the second pit is being treated, settled, and emptied. The pH of the waste water is first adjusted with lime and then treated with ferrous sulphate, a polyelectrolyte, and limestone. The latex solids coagulate around the limestone which serves to sink the solids. The settled solids are removed from the pits periodically when the solids depth becomes excessive. The clarified waste water enters four aeration basins operated in parallel. The basins are equipped with four 15-horsepower aerators. The aeration basin effluent enters a secondary clarifier and overflows to a sump from which it is pumped to the city treatment plant. The clarifier underflow is sent to a sludge thickener, while the supernatant is returned to the aeration basins. The biological sludge in the thickener is periodically removed and landfilled. The

coagulation pit solids and the thickened biological solids are not suitable for satisfactory landfill because of their high water content. Studies are currently underway to determine adequate techniques for dewatering and disposing these sludges. The coagulation pits provide good quality primary effluent. The COD and BOD of this effluent are high, however. The secondary treatment plant produces a final effluent having a COD and BOD of approximately 600 and 50 mg/L respectively. The high COD:BOD ratio indicates high biological resistance of the waste water constituents from this latex plant. Although the BOD level (50 mg/L) would not be suitable for direct discharge, it is very amenable to acceptable discharge to secondary treatment plants.

Plant O

This plant is responsible for the manufacture of stryene-butadiene latexes. The annual production rate is approximately 21,000 metric tons. The plant commenced production in 1952 and is located in an urban area with limited room for expansion. The plant also has a research facility and a pilot plant.

The stryene-butadiene family of latexes produced at the plant can be classified by three groups: stryene-butadiene latex, styrene-butadiene carboxylated latex, and stryren-butadiene-vinyl pyridine latex. All these latexes are produced by similar processing techniques and equipment. The monomers used (styrene, butadiene, organic acids, and vinyl pyridine) are shipped to the plant by tank car and tank truck. The latexes produced are used for tire fabric coating, backing material, and paper coatings.

The plant uses city water for process water, boiler makeup water, and cooling tower makeup. The boiler makeup is softened before injection. The cooling tower makeup is treated with a dispersant, corrosion inhibitor, and slimicide. The process water, used for solution preparation, is deionized before use.

The principal process waste waters generaged in the plant originate from equipment cleanout, area washdown, and stripper condensates. Excess monomers are not recovered. Reactors, strippers and storage tanks are periodically cleaned of rubber build-up by hand and then rinsed with water. Generally, large quantities of water are used for each cleanout. The latex filters are frequently cleaned. This involves first removing the trapped rubber solids and flushing the filter with water. The rinse waters contain suspended solids, COD, and uncoagulated latex. Floors and loading-unloading areas are flushed with water. These wastewaters contain COD, suspended solids, and uncoagulated latex. The vapors from steam stripping operations are condensed and discharge into a receiver. The receiver waters which overflow to the plant sewers have a high organic loading with correspondingly high COD and oil levels. The seal water for the vacuum pump serving the vacuum stripping equipment is slightly contaminated with organics, and presently discharges on a once-through basis. Studies are being made to collect individual seal water discharges and recycle the bulk of them with a controlled blowdown of

contaminated water. This will reduce the total volume in the plant's final effluent.

The regeneration waste from the boiler water makeup softener is a concentrated salt solution and therefore contributes high total dissolved solids to the effluent. The process water deionizer is regenerated with sulphuric acid and caustic soda. The discharge of these solutions will produce both acid and alkali peaks in the effluent, although there is generally an excess of sulphuric acid in the daily regeneration discharges. The boiler and cooling tower blowdowns contribute high total dissolved solids and moderate COD to the plant's final effluent.

The treatment of the plant's waste waters include equalization, chemical coagulation and settling, and secondary treatment in the local municipality's treatment plant. The waste waters are first pumped from the plant effluent trench into an equalization basin, which provides approximately 24 hours detention and is aerated with two aerators. The pH of the equalized waste water is adjusted from normally alkaline by addition of sulfuric acid to the neutralization sump. The waste waters are pumped from the sump to a reactor-clarifier where alum, coagulant, and polyelectrolyte are added in the mixing chamber. The latex and fine rubber particles are coagulated and collected as a sludge from the bottom of the clarifier. The clarified effluent overflows the clarifier to the city's sanitary sewer for secondary treatment. The clarified sludge is sent to a thickener and finally to a sludge holding tank, and is then loaded into a tank truck for disposal. The supernatant from the thickener is returned to the reactor-clarifier. The treatment system described above produces a good quality primary effluent. COD and BOD are reduced by approximately 70 and 50 percent, respectively. The suspended solids and oil are decreased by 80 and 50 percent each.

Summary of Control and Treatment Technology

In-plant control technology covers segregation and measures for handling, reuse, modification of processing, and disposal of various types of waste waters, including spills and leakage, washdowns, control of runoffs, and housekeeping practices. End-of-pipe treatment technology covers the treatment of various combinations of process and nonprocess wastewaters. Separate discussions are presented for the Tire and Inner Tube and the Synthetic Rubber segments of the industry.

Tires and Inner Tubes

In-Plant Control

In-plant measures included the proper handling of soapstone, of the latex dip, and of discharges from air pollution equipment.

Soapstone

Soapstone is a slurry normally consisting of clay, an emulsifying agent, and water. According to one plant representative, soapstone, if

continually discharged, will contribute a high solids and BOD loading to the process waste waters. The standard method of eliminating a continuous discharge of large quantities of soapstone is the use of a closed-loop recirculation system. Such a system needs periodic cleaning, usually on a weekly basis. This cleaning operation can, but does not necessarily, lead to a discharge. Prior to cleaning, the soapstone solution in the system is generally transferred to storage tanks. The alternative to recirculation is to discharge the solution directly into the process sewers. Both practices were observed during the field survey, the first being the better from a waste water control standpoint. Soapstone washwater is a potential discharge which is commonly sent to end-of-pipe treatment. However, it was observed that this washwater could be stored and used as makeup for the soapstone solutions for future operations. Alternative methods for controlling discharges from weekly washdown include the use of substitute solutions which require the system to be cleaned on a less frequent basis.

Control of minor discharges of soapstone, such as spills and leakage, is achieved by the use of curbing and by blocking off drains in the dipping area. In addition, drip pans are provided for stock during the air-drying operation. Soapstone that is spilled into the curbed area is periodically vacuumed out and sent to a landfill site. Newer plants are constructed without drains in this area, thus eliminating the possibility of soapstone contamination of process waste waters. Instead of curbing, steel grates are placed on the floor; these can be removed when cleaning the area.

Latex Dip

The most common practice of the larger manufacturers is to eliminate this operation from the tire facility. Fabric is dipped by a centrally located facility and then shipped to the tire plant. However, in plants that still dip fabric, the accepted procedure is to seal off drains in the immediate area, supply the area with curbing, and drum the waste solutions for disposal at landfill sites. The alternative is to dump the waste solutions into process sewers which are destined for end-of-pipe treatment systems. The amount of waste from this operation is small, less than 230 liters (60 gals) per day. Drumming of the solution is therefore preferred, since treatment of this stream once diluted with other streams is difficult.

Air Pollution Control Residues

It is not common for manufacturers to use large quantities of wet particulate-collection systems. In the compounding area, in particular, bag-houses, rather than wet scrubbers are used. Wet systems are more common in the tire-finishing area, where they collect the grindings from the white sidewall grinding machines, balancing machines, and the tire-repair area.

Discharges from wet scrubbers contain high loadings of settleable solids, which must be removed before final discharge. The solids collected from the tire-finishing area can be settled out in a small

sump. The particulates are large, and with a properly designed separator, the clarified water can be, and frequently is completely reused.

The discharges from wet scrubbers used in the compounding area are much finer and require longer settling times. Only one plant visited used wet scrubbers in this area. This plant used a 2,100 sq. meter (0.52-acre) lagoon to separate the solids from this discharge. Unless specifically required to meet air pollution ordinances, wet scrubbers in this area are not recommended.

Additional air pollution equipment can be found in the tire-painting areas. Stricter air emission standards and OSHA standards are forcing tighter controls on particulate and solvent emissions from this area. Consequently, the industry is currently attempting to substitute water-based paints and sprays for solvent-based materials, but with only limited success. Wet air pollution equipment in this area was found at only one plant; there was not waste water discharge, because all the scrubber water was reused.

Spills and Leakage

To control oily waste waters resulting from spills and leakage, the common practice is to provide curbing and oil sumps and to seal drains. In older plants, the roller mills are located in basins. The blocking off of drains in these basins as a control measure is not feasible because electrical machinery is located in the basins. A broken water pipe would fill the basin, thus shorting out the machinery. Curbing is used to keep normal area washdown and periodic leakages and spills from entering the basin and thus contaminating process waters. In newer plants, machinery is located on the floor surface. Updated seal designs prevent the leakage of oil. In many cases, potentially contaminating areas have no drains, thus eliminating the possibility of oil in these process waste waters.

In plants where recirculated water is the primary source for cooling, the process and nonprocess sewers are separate. Oil sumps and API separators can therefore be provided to treat oily process waste waters. The separable oil from these devices is removed either periodically by maintenance peiple or continuously by a belt filter: the continuous removal is considered the better practice. During periodic removal of oil, the agitation supplied will result in a large quantity of oil being released to the effluent, thus reducing the separator's overall average removal efficiency.

In plants where the primary source of cooling is once-through water, process and nonprocess sewers are combined. Removal of oil must be accomplished in an end-of-pipe treatment facility. Dilution by non-process waste waters directly affects the removal efficiencies of oil in the end-of-pipe treatment facility.

Washdowns and Machine Cleaning

Common practice for prevention of process-area washdowns from contaminating waste waters is the use of dry sweeping equipment. These include automatic sweepers, brooms, and shovels. Oily spills are cleaned using solvents and rags, the resulting contaminated material being drummed and sent to a landfill. Practices employed in nonprocess areas (such as the boiler house and storage areas) are similar.

Machines and machinery parts are normally cleaned with solvents or steam. Spent solvents are drummed and sent to a landfill. The use of steam requires a special area supplied with curbing and an API separator to remove separable oil and soids. Discharges of untreated oil- and solid-contaminated steam condensate occur and constitute a significant source of process waste waters. Although steam cleaning has the disadvantage of having a discharge that must be treated, it eliminates the possiblity of a careless operator discharging large quantities of organic solvents into an untreated process waste water stream.

Molds from the curing presses are normally cleaned by sand- or air-blasting equipment. These are dry, and involve no waste water problem.

Runoff

Runoff from oil-storage areas occurs due to oil spills, storm water, and various blowdowns which occur in the storage area. Handling practices vary within the industry. Minimal control involves the diking of all oil-storage areas to prevent contamination of wastewater by large oil spillages which can occur during unloading or due to leaking tanks. These dikes generally are provided with drainage ports to prevent normal storm water from filling the diked area. This allows minor oil spills, attributable to operator negligence, to contaminate storm runoff. A better system involves the diking of the storage area, the roofing of storage area to prevent storm runoff contamination, and use of an oil sump to collect minor spills and leakage. Collected oil is drummed and sent to a landfill. To prevent oil from unlaoding areas from contaminating the waste waters, drains are diked and covered with straw filters. This control technique suffers from the possibility of storm runoff contamination.

Other treatment schemes include the use of separators to treat oil storage runoff. The primary emphasis here is to treat runoffs due to continual water running through the area. The systems generally are not designed to handle increased loads due to storm runoff.

Solvent storage and maintenance areas are normally confined to buildings. To decrease the possibility of contamination due to operator or maintenance negligence, these areas are not supplied with drains.

End-of-Pipe Treatment

End-of-pipe treatment in this segment of the industry generally involves the treatment of combined process and nonprocess waste water in a primary sedimentation basin or lagoon. Once-through, non-contact cooling water usually is not treated even though the possibility exists

for oil contamination from process waste water. Primary emphasis is on removal of separable solids from the nonprocess boiler blowdowns and water treatment wastes and from the process washdown waters (if any) from the soapstone area.

The most effective system although not generally applicable because of land requirements, is the use of judicious water mangement techniques to minimize nonprocess discharges and of holding lagoons to contain all wastes including process, nonprocess, and storm runoff. Other lagooning systems used for treatment of all process (including once-through cooling water) and nonprocess waste waters were observed. Residence times varied from twelve to twenty-four hours with surface laodings as high as 12,000 liters/min/sq meter (1,200 gal/min/sq ft). Auxiliary equipment observed included oil skimmers and sludge handling equipment.

From the standpoint of treating process waste waters, these systems suffer heavily from dilution, particularly in the treatment of grease or oily wastes. Dilution by process streams was as high as 75 to 1. Dilution by heavy storm runoff was an additional problem at many locations.

Synthetic Rubber

In-plant Control

Since the synthetic rubber industry is highly technological, involving many proprietary and confidential processing techniques, many potential in-plant waste water control methods would call for radical changes in processing or product quality. Such techniques are obviously not feasible. However, some potential control methods deserve mention so that their applicability may be evaluated.

Crumb Rinse Overflow

It was observed that some crumb rubber plants generate crumb rinse overflows which have a lower loading of rubber fines than other plants. Generally, however, such losses cannot be reduced with finer in-plant screens since they are a function of both the type and the coagulation properties of the rubber. One plant did use a proprietary method to finish the rubber cement in which a water slurry is not used. This system eliminates the crumb slurry overflow and the contained rubber fines. It is not necessarily applicable wholesale to crumb rubber production, but does merit investigation by industry.

Coagulation Liquor Overflow

Most emulsion crumb rubber processes use an acid and brine coagulation liquor. One plant, however, coagulates the latex with an acidpolyamine liquor which reduces the quantity of total dissolved solids discharged in the coagulation liquor overflow. The use of this type of coagulation liquor is not always possible, but if employed could significantly reduce the total dissolved solids in the final effluent.

Vacuum Systems

Several plants are converting vacuum systems from steam jet ejectors to vacuum pumps for efficiency and waste water reasons. In order to maximize the waste water benefits derived from the use of vacuum pumps, the seal water should be recycled. An overflow is generally required from the seal water recycle system; this overflow is normally slightly contaminated with oil but has a better quality than the steam jet condensate.

Caustic Scrubbers

In some plants, the caustic soda solution used to remove inhibitors from some monomers (notably butadiene) is replaced batchwise. The spent caustic soda solution, usually 10-20 percent sodium hydroxide, should not be discharged batchwise. It should be containerized and bled into the total plant effluent, thereby diluting its high pH, alkalinity, COD, and color contributions.

Carbon Black Slurries

The usual method is to slurry the carbon black for addition to the rubber with water. One plant visited employs a steam grinding-slurrying technique which reduces carbon black spillage and consequently washdown and runoff waste waters laden with black fines; this technique avoids the need for carbon black settling pits and the associated pit cleaning costs.

Latex Spills

Latex spills and leakages occur from time to time in all emulsion crumb and latex plants. In most cases, the spill is washed to the nearest plant drain using a water hose. In many cases, this produces unnecessary washdown water and dilutes the latex so that subsequent treatment by coagulation is much more difficult. An alternative technique is to coagulate the latex in situ with alum, for example, and remove the coagulated rubber solids with scrapers. The volume of subsequent washdown water required is less and the latex solids in the washdown water are greatly reduced.

Baler Oil

As a result of the high hydraulic pressures involved and the continual jarring action of the balers, oil leaks are frequent. Back-welding the hydraulic lines, although more expensive as an initial equipment cost, does significantly reduce the occurrence of baler oil leaks and can produce appreciable savings in baler oil usage. In addition, plant floor drains should be sealed and, if necessary, retention curbing installed to keep leaked oil from leaving the baler area. Balers using water as the hydraulic fluid are also available and are being used in some plants; oil leakage with this type of machine is obviously eliminated.

End-of-Pipe Treatment

Emulsion Crumb Plants - Primary

It is normal practice for crumb rubber producers to recycle part of the crumb rinse water. The remainder of the crumb rinse water is discharged in order to blow down accumulating fine rubber solids, dissolved solids and organics. The rinse water discharge or overflow is clarified before final treatment in a crumb separation pit. The trapped rubber solids are removed periodically by scoop. A very common shortcoming of these separators is that they are operated as single units and are not cleaned frequently enough. This results in short-circuiting followed by poor separation. In addition, when the pits are cleaned, the separated rubber solids are distrubed and rubber solids that had previously separated recombine with the pit effluent until the condition of the pit stabilizes. Dual pits would solve this problem: one pit would stay in operation while the other was cleaned and allowed to stabilize.

Since waste waters from emulsion crumb plants contain considerable quantities of latex, it is necessary to coagulate the latex in order to achieve a good quality effluent. Chemical coagulation by itself is seldom sufficient, because the density of the coagulated rubber is normally close to that of water. Therefore, it is customary to add a "sinker" (clay or limestone) to the coagulation mixture to sink the coagulated rubber and effect the separation. For a small waste water flow, chemical coagulation using (for example) alum, polyelectrolyte, and clay in a rapid mix tank can be followed by flocculation in a flocculator tank. Clarification can then be accomplished in a rectangular clarifier equipped with solids removal equipment. Larger waste water flows can be treated in a reactor-clarifier with rim overflow and central sludge draw-off.

The collected sludge can be thickened and dewatered before disposal in a landfill. Dewatering studies on this type of sludge concluded that a plate-and-frame pressure filter performed well. The installed filter was automatically controlled for feed shut-off, filter opening, core blowout, filter closing, precoating, and feed restoration (refer to Plant J).

One plant (Plant K) uses chemical coagulation followed by air flotation for primary clarification (6). Instead of sinking, the rubber solids are floated to the clairfier surface with air bubbles and removed by surface solids removal equipment. This treatment facility is relatively new and has had start-up troubles, although they have been satisfactorily resolved. Air flotation in this application produces primary effluent of good quality.

The collected surface solids are pumped to a sludge impoundment lagoon where they dry out. The use of this lagoon is limited and a long-term solids dewatering and disposal technique will have to be found.

Where adequate land is available, rubber solids separation has been achieved using primary settling ponds. Chemical coagulation of the

solids prior to discharge to the ponds is usually necessary. The settled and floating solids (since both types are produced) are removed from the ponds periodically by vacuum truck or scoop.

Emulsion Crumb Plants - Secondary

Biological oxidation of the primary effluent is achieved in aerated lagoons or in activated sludge plants. Generally, a nutrient must be added. Both technologies obtain satisfactory oxidation of the dissolved contaminants; problems can arise in the clarification of the secondary effluent. Good secondary clarification of effluent from an aerated lagoon has been obtained with the aforementioned air flotation plant, which is a dual system with both primary and secondary air flotation clarifiers.

If sufficient land is available, the effluent from the aerated lagoons can be clarified and stabilized in stabilization ponds. This type of facility is temperature dependent, of course, and performs better in warmer climates.

Clarifiers are commonly used for secondary clarification in activated sludge plants. They are generally adequate, but cases exist where high solids carryover is a problem. Secondary clarification can be assisted with coagulation chemicals in much the same manner as for primary clarification, but the additional chemical cost is high.

One plant in the industry, in an area where water is in short supply, is evaluating evaporation to remove waste water contaminants (7). Satisfactory operation has not been achieved to date because of corrosion and fouling of the evaporator tubes. It is proposed that satisfactory operation can be achieved with the use of more effective corrosion resistant materials of construction as well as pretreatment to reduce the quantities of certain organics and sulfides. Efforts to demonstrate this will be made by EPA-Office of Research and Development during 1973-1974.

Emulsion Crumb Plants - Advanced

After secondary treatment, emulsion crumb waste waters still contain high levels of COD. A high COD level appears to be a common characteristic of secondary effluents from emulsion crumb, solution crumb, and latex plants, and indicates that certain constituents of the waste waters generated in synthetic rubber plants are refractory to biological oxidation.

With the exception of the evaporation treatment described above, only one other study has been made of teritary or advanced treatment of emulsion crumb rubber waste waters. This was carried out on a pilot plant scale using activated carbon treatment (refer to the Survey of Plant J - Section VII). Approximately 70% of the COD remaining after secondary treatment was removed by the carbon.

Solution Crumb Plants - Primary

Primary clarification of the solution crumb plant waste water is carried out in crumb pits. These pits are similar in design to those for emulsion crumb production facilities. To avoid re-suspending the separated rubber solids, dual crumb pits should be used.

Other forms of primary treatment are not required for solution crumb waste waters, since uncoagulated latex is not present and the fine rubber solids separate readily.

Solution Crumb Plants - Secondary

Secondary treatment technology uses both activated sludge and aerated lagoon systems. Good BOD removals are achieved, but poor secondary clarification is a problem in most cases. The reasons for this are not certain. A high level of COD remains after biological treatment, indicating that much of the waste water constituents are biologically refractory.

Solution Crumb Plants - Advanced

Advanced or tertiary treatment technologies have not been used on secondary effluents from solution crumb plants. It is probable that activated carbon treatment would give COD removals similar to those for emulsion crumb waste water, since the raw waste water constituents (for example, traces of monomer) are similar for both types of waste water.

Latex Plants - Primary

Since latex plant waste waters contain uncoagulated latex solids, primary clarification is assisted by chemical coagulation. In much the same manner as for emulsion crumb waste waters, clarification can be effected in reactor-clarifiers or systems with separate rapid mix, flocculation, and clarification tanks. Latex waste waters can also be clarified by air flotation.

Latex Plants - Secondary

Activated sludge plants are used for the secondary treatment of latex waste water. High residual COD levels are a problem. These levels are higher than for either emulsion crumb or solution crumb plants, because the initial COD loading of the raw waste water from latex plants is much higher. It is feasible that aerated lagoons and stabilization ponds will produce satisfactory oxidation and stabilization of latex waste waters.

Latex Plants - Advanced

Advanced or tertiary treatment technologies have not been used on latex waste waters. It is probable that COD removals similar to those achieved by emulsion plants can be achieved for latex waste water by using activated carbon columns.

Additional Studies on Activated Carbon Treatment of Synthetic Rubber Waste Water

Subsequent to the original draft of this document, additional studies were performed by the EPA Advanced Waste Treatment Research Laboratory, Cincinnati, Ohio, on the feasibility of using activated carbon technology to reduce COD levels in synthetic rubber waste waters (8).

From the results of the studies it was concluded that COD removal is feasible. With the three types of synthetic rubber waste waters: emulsion crumb, solution crumb and latex rubber, COD removal with a maximum carbon dose ranged from 50 to 97%. Estimated cost of COD removal based on an average removal rate of 70% COD would be $369.00 per million gallons of waste water treated.

SECTION VIII

COST, ENERGY AND NON-WATER QUALITY ASPECTS

Tire and Inner Tube Industry

Selection of Control and Treatment Technologies Based on Costs

Two alternative approaches exist for the control and treatment of process waste waters from both old and newer tire and inner tube production plants.

The first approach is to combine process and nonprocess waste waters and to treat the entire plant effluent. Where land is available, end-ofpipe treatment is the approach favored by many of the tire manufacturers. Generally, the reasons supporting this approach are as follows:

1. In older plants, in-plant sewers for process and nonprocess waste waters are usually combined, thus making combined treatment more attractive.

2. Process flows are usually small relative to nonprocess flows.

3. The treatment of nonprocess waste waters has received the bulk of industry's attention. High suspended solid loadings in blowdown and water treatment wastes are the major pollutant in the combined plant effluent from tire facilities.

However, end-of-pipe treatment systems also have several disadvantages:

1. The combined effluent treatment system usually requires one or two lagoons for settlement and retention. Lagooning of the wastes requires large land area, which is not readily available at many plant locations.

2. Because of dilution, the effectiveness of treatment for oil removal from process waste water is reduced. In several of the systems observed, oil passed through untreated (although it was present in significant quantities), because its concentration was below the capabilities of the treatment system employed.

The second approach employed is control and treatment of a segregated and undiluted process waste water. This approach has been followed in plants having partially or wholly segregated process and nonprocess sewers. This would, of course, include any plant using recirculated cooling water. The main advantages for this treatment scheme over combined endof-pipe treatment are:

1. Higher pollutant removal rates.
2. Smaller land area required for treatment facilities.

The primary disadvantage of a segregated system approach is that separate process and nonprocess sewers are required.

Upon examining these alternatives, control and treatment of segregated process waste waters was considered to be most applicable to the tire producing industry. End-of-pipe treatment of combined waste waters is not feasible for pollution control because of: 1) the ineffectiveness of such systems in removal of process waste water contaminants; and 2) the large land requirements. All costs, therefore, are related to the treatment of a segregated process waste stream.

With proper in-plant control, the process streams consist of readily separable lubricating and extender oils and settleable solids. Volumetric flow rates for process waste waters are small. Therefore, the initial treatment applicable from a cost and proven operation basis is an API-type gravity separator. The performance and efficiency of a gravity separator can be improved by addition of an absorbent filter.

Effluent quality data for older tire and inner tube and for newer tire facilities are presented (along with cost data) in Tables 18 and 19. The treatment technology involves the isolation of wastes with curbing, the protection of oily areas to prevent storm runoff contamination, and the separation of settleable solids and oily material from the waste water.

A more detailed description of recommended facilities is presented in the tire and inner tube portion of Section IX, and a flow diagram of the system used as a basis for costing is presented in Figure 10.

Treatment Cost Data

Data from Corps of Engineers permit applications and plant data obtained during inspection visits were used to obtain the average or typical plant size and waste water discharge flows, and raw waste loadings as described in Section V.

In order to adequately estimate the waste water discharge flow rates, the plant effluent was divided into process waste waters and nonprocess waste waters. The process waste waters consist of mill area oily waters, soapstone slurry and latex dip wastes, area washdown waters, and emission scrubber waters, contaminated storm waters from raw material storage areas. The nonprocess waste waters are sanitary and clean storm waters, utility waste waters such as once through cooling water, boiler blowdown, cooling tower blowdown, water treatment wastes and uncontaminated contact cooling water like tread cooling waters.

From these data, a typical process waste water flow was estimated to be 3.785 L/sec (60 gpm) for a plant consuming 205,000 kg (450,000 lbs) of raw materials per day. For the older tire and inner tube plant subcategory the average oil loading is 0.246 kg/kkg (lb/1000 lb) of raw material consumed. The suspended solids loading for this subcategory is estimated to be 0.319 kg/kkg (lb/1000 lb) of raw material. Based on these typical profiles for old and new production facilities, treatment

TABLE 18

Old Tire and Inner Tube Production Facility Subcategory

Estimated Wastewater Treatment Costs for Different Degrees of Treatment based on a Typical Raw Material Consumption of 205 metric tons/day

	Treatment or Control Technology[1]	
	A	B
Investment[2]	$779,000	$808,000
Annual Costs		
Capital Costs	$ 78,000	$ 81,000
Depreciation	156,000	162,000
Operating and Maintenance Costs (excluding energy and power costs)	52,000	54,000
Energy and Power Costs	2,000	2,000
Total Annual Costs[2]	$288,000	$299,000

Parameters (kg/kkg raw material)	Raw Waste Loads	Effluent Quality	
		A	B
Suspended Solids	0.319	0.064	0.064
Oil and Grease	0.120	0.048	0.008

[1]Technology A is Isolation of Wastewaters followed by API Gravity Separator
Technology B is Technology A followed by an Absorbent Filter

[2]August 1971 Dollars

TABLE 19

New Tire Production Facility Subcategory

Estimated Wastewater Treatment Costs for Different Degrees of Treatment based on a Typical Raw Material Consumption of 205 metric tons/day

	Treatment or Control Technology[1]	
	A	B
Investment[2]	$597,000	$628,000
Annual Costs		
Capital Costs	$ 60,000	$ 63,000
Depreciation	119,000	126,000
Operating and Maintenance Costs (excluding energy and power costs)	41,000	43,000
Energy and Power Costs	2,000	2,000
Total Annual Costs[2]	$222,000	$234,000

Parameters (kg/kkg raw material)	Raw Waste Loads	Effluent Quality	
		A	B
Suspended Solids	0.319	0.064	0.064
Oil and Grease	0.083	0.048	0.008

[1] Technology A is Isolation of Wastewaters followed by API Gravity Separator
Technology B is Technology A followed by an Absorbent Filter

[2] August 1971 Dollars

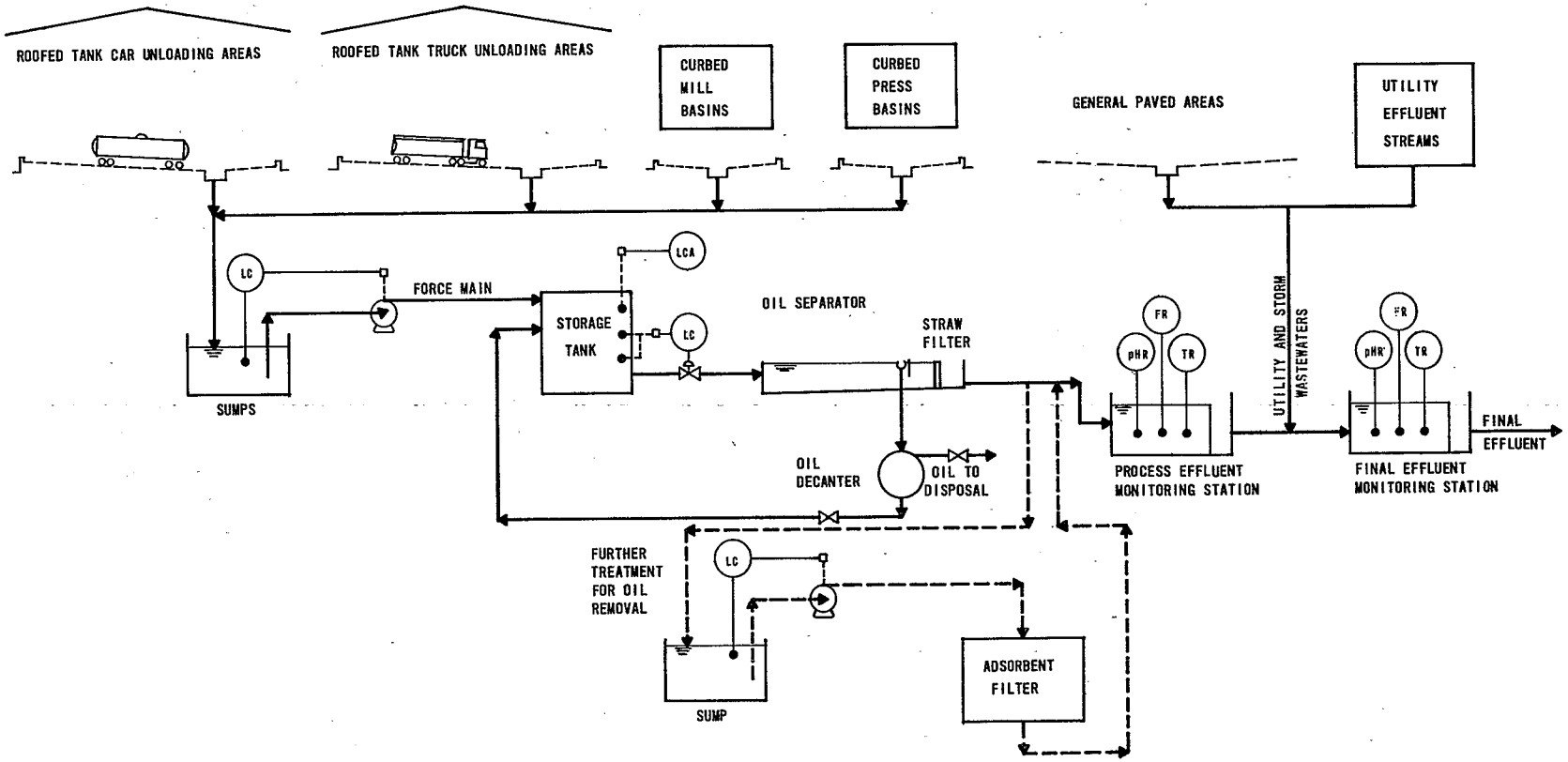
ROOFED TANK CAR UNLOADING AREAS
ROOFED TANK TRUCK UNLOADING AREAS
CURBED MILL BASINS
CURBED PRESS BASINS
GENERAL PAVED AREAS
UTILITY EFFLUENT STREAMS
LC
FORCE MAIN
SUMPS
LCA
STORAGE TANK
LC
OIL SEPARATOR
STRAW FILTER
OIL DECANTER
OIL TO DISPOSAL
FR
pHR
TR
PROCESS EFFLUENT MONITORING STATION
UTILITY AND STORM WASTEWATERS
FR
pHR
TR
FINAL EFFLUENT MONITORING STATION
FINAL EFFLUENT
FURTHER TREATMENT FOR OIL REMOVAL
LC
SUMP
ADSORBENT FILTER

cost data were generated and are presented in Tables 18 and 19. The costs shown for a typical older facility are based on the worst case of having to install a completely segregated sewer system rather than isolating the process waste water stream from the combined sewer line.

The total annual costs for the proposed BPCTCA and BATEA control and treatment technologies can be interpreted in terms of incremental costs per unit of production. Study of the cost data for a typical older tire or inner tube plant consuming 205,000 kg (450,000 lbs) of raw materials per day indicates that the treatment costs for both the BPCTCA and BATEA is approximately 0.59 cents per kg (0.27 cents/lb) of raw materials. The treatment cost per unit of production for both the BPCTCA and BATEA for a newer tire or inner tube facility of similar size (205,000 kg raw material) is estimated to be approximately 0.46 cents per kg (0.21 cents/lb) of raw material consumed. In other words the proposed treatments will add approximately 6 cents to the cost of a passenger tire manufactured in an older plant and about 5 cents to the cost of a passenger tire prduced in a newer facility.

Investment costs have been factored to August 1971 dollars using Engineering News Record cost indices. Depreciation was calculated on the basis of straight-line depreciation with a five year life and zero salvage value.

Designs for the proposed model treatment systems were costed to evaluate the economic impact of the proposed effluent limitations. The design considerations (i.e., the influent raw waste loads) were selected to represent the expected raw waste load within each subcategory. This results in the generation of cost data which should be conservative when applied to most of the plants in this category. Relatively conservative cost figures are preferred for this type of general economic analysis.

The capital costs were generated on a unit process basis, with the following "percent add on" figures applied to the total unit process costs in order to develop the total installed capital cost requirements.

Item	Percent of Unit Process Capital Cost
Electrical	12
Piping	15
Instrumentation	8
Site Work	3
Engineering Design and Construction Supervision Fees	10
Construction Contingency	15

Since land costs vary appreciably between plant locations, it was decided to exclude land cost from the total capital cost estimates. Land costs must be added on an individual case basis.

Annual costs were computed using the following cost basis:

Item	Cost Allocation
Capitalization	10 percent of investment
Depreciation	5-yr straight line with zero discharge value
Operations and Maintenance	Includes labor and supervision, chemicals, sludge hauling and disposal, insurance and taxes (computed at 2 percent of the capital cost), and maintenance (4 percent of capital cost)
Power	Based on $0.01 kw-hr for electrical power.

The short-term capitalization and depreciation write-off period is what is currently acceptable under current Internal Revenue Service Regulations pertaining to pollution control equipment.

All costs were computed in terms of August, 1971 dollars, which correspond to an Engineering News Record Index (ENR) value of 1580.

Energy Requirements

Energy input is related to the need for electric pumps to pump process waste waters from the plant area and through the treatment system. Electricity costs are estimated at one cent per kilowatt hour. The extra power required for treatment and control systems is negligible compared to the power requirement of the tire manufacturing equipment.

Non-Water Quality Aspects

The primary non-water quality aspect deriving from use of a separator is the need for disposal of oil and solids. Additional solid waste results from the use of a non-regenerative type absorbent filter.

Solid waste disposal is a major problem confronting the industry as a whole. Typically 3,100 kg (6,800 lbs) of solid waste are generated by a tire plant each day. Additional solid waste results from the drumming of the waste solutions for off-site disposal. Many manufacturing plants, particularly in the northern states, are finding it difficult to locate and arrange for service at satisfactory landfill sites. Fortunately, the additional solid waste generated by the proposed treatment technology is very small relative to the normal solid waste generated by the production facility. not be significant.

Land requirements for the treatment system are small; nevertheless, certain older facilities located in highly congested urban areas will find it difficult to allocate space for even this minimal treatment facility. These plants may be forced to turn to other control measures

and/or to pre-treat for disposal and discharge of the process waste waters to publically owned treatment works.

Synthetic Rubber Industry

Emulsion Crumb Subcategory

Selection of Control and Treatment Technologies

Four degrees of control and treatment were considered in weighing treatment effectiveness versus cost of treatment: primary clarification; biological oxidation; and advanced treatment to two levels of COD removal.

Since emulsion crumb waste waters contain uncoagulated latex solids, it is necessary to coagulate these solids prior to clarification. The cost alternatives for the primary clarification of emulsion crumb waste water have been developed on the basis of a treatment model involving chemical coagulation, with a sinking material such as clay to sink the coagulated solids. This, however, is only one of several possible methods of achieving primary clarification. Air flotation is another approach to primary clarification which as been applied to emulsion crumb waste waters with success. Chemical coagulation has been used to develop the cost data because there are more cases of its successful application for this type of waste water, and, therefore, there is less uncertainty about the effectiveness of this technology for this subcategory.

After primary clarification, emulsion crumb rubber waste waters invariably have high BOD and COD concentrations. Biological treatment is necessary (and is commonly practiced by the industry) to remove these contaminants. In order to develop the cost alternatives for biological treatment, activated sludge processes were used as a model treatment. It is, of course, only one method for obtaining biological oxidation, since other comparable technologies, such as aerated lagoons and stabilization ponds exist and are used to some extent by the industry. The activated sludge process was chosen as a model treatment because its performance is not as temperature- and climate-dependent as is an aerated lagoon or stabilization pond system and because the resulting cost data are independent of geographic location. In addition, an aerated lagoon or stabilization pond system requires considerably larger areas, which are not always available. Activated sludge facilities, by contrast, require minimal land.

The major pollutant remaining in emulsion crumb waste waters after biological treatment is COD. Its concentration is much higher than the other principal parameters and if advanced waste water treatment is to be carried out, it is logical that the treatment technology should be applied to reduction of the high COD levels. For the waste water flow rates involved in emulsion crumb rubber production, activated carbon treatment is the only technology currently applicable for COD removal. In order to prevent blinding of the carbon beds and columns with fine suspended solids, a dual-media filtration system is required upstream of

the columns. Activated carbon adsorption of emulsion crumb secondary effluent has been studied in pilot-scale test equipment. However, because of the technical risk with respect to performance and the uncertainity of the associated capital and operating costs, two levels of activated carbon treatment have been modeled. These two levels are equivalent to overall COD reductions of 75 and 90 percent.

Basis of the Treatment Cost Data

An emulsion crumb industry profile was made, based on industry production capacity data, to determine the typical size of an emulsion crumb production facility. The average, or typical, plant is rated at 128,000 metric tons per year. The waste water flow for such a plant would approximate 66 L/sec (1,050 gpm). The model treatment plant, using chemical coagulation and clarification followed by activated sludge biological treatment, is shown in Figure 11. The degree of treatment afforded by this technology is equivalent to best practicable control technology currently available. The recommended treatment technology to attain best available technology economically achievable is presented in Figure 12. This treatment technology includes dual-media filtration followed by activated carbon adsorption.

Designs for the proposed model treatment systems were costed to evaluate the economic impact of the proposed effluent limitations. The design considerations (i.e. the influent raw waste loads) were selected to represent the highest expected raw waste load. This results in the generation of cost data which should be conservative when applied to most of the plants in the emulsion crumb subcategory. Relatively conservative cost figures are preferred for this type of general economic analysis.

The capital costs were generated on a unit process basis, with the following "percent add on" figures applied to the total unit process costs in order to develop the total installed capital cost requirements.

Item	Percent of Unit Process Capital Cost
Electrical	12
Piping	15
Instrumentation	8
Site Work	3
Engineering Design and Supervision Construction	10
Construction Contingency	15

The total annual treatment costs for emulsion crumb plants can be presented in terms of incremental costs per unit of production. The cost data cited for a typical emulsion crumb production facility of 128,000 metric tons per year preduct that the BPCTCA treatment will cost 0.66 cents per kg (0.3 cents/lb) of production and that the additional

FIGURE 11

HYPOTHETICAL END-OF-PIPE SECONDARY WASTEWATER TREATMENT FACILITY FOR SYNTHETIC RUBBER PLANTS

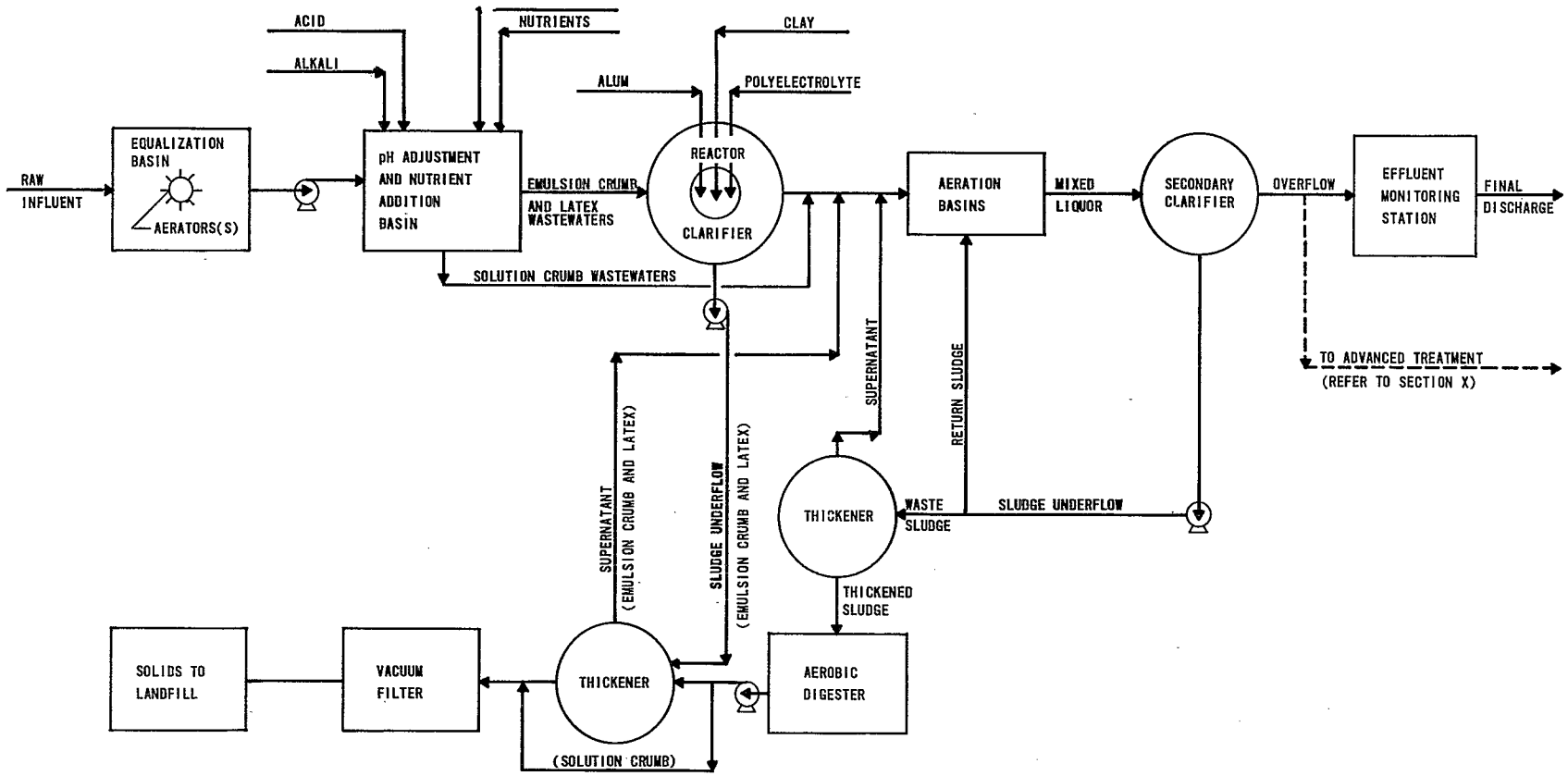

FIGURE 12

HYPOTHETICAL END-OF-PIPE ADVANCED WASTEWATER TREATMENT FACILITY FOR ALL SUB-CATEGORIES OF SYNTHETIC RUBBER PLANTS

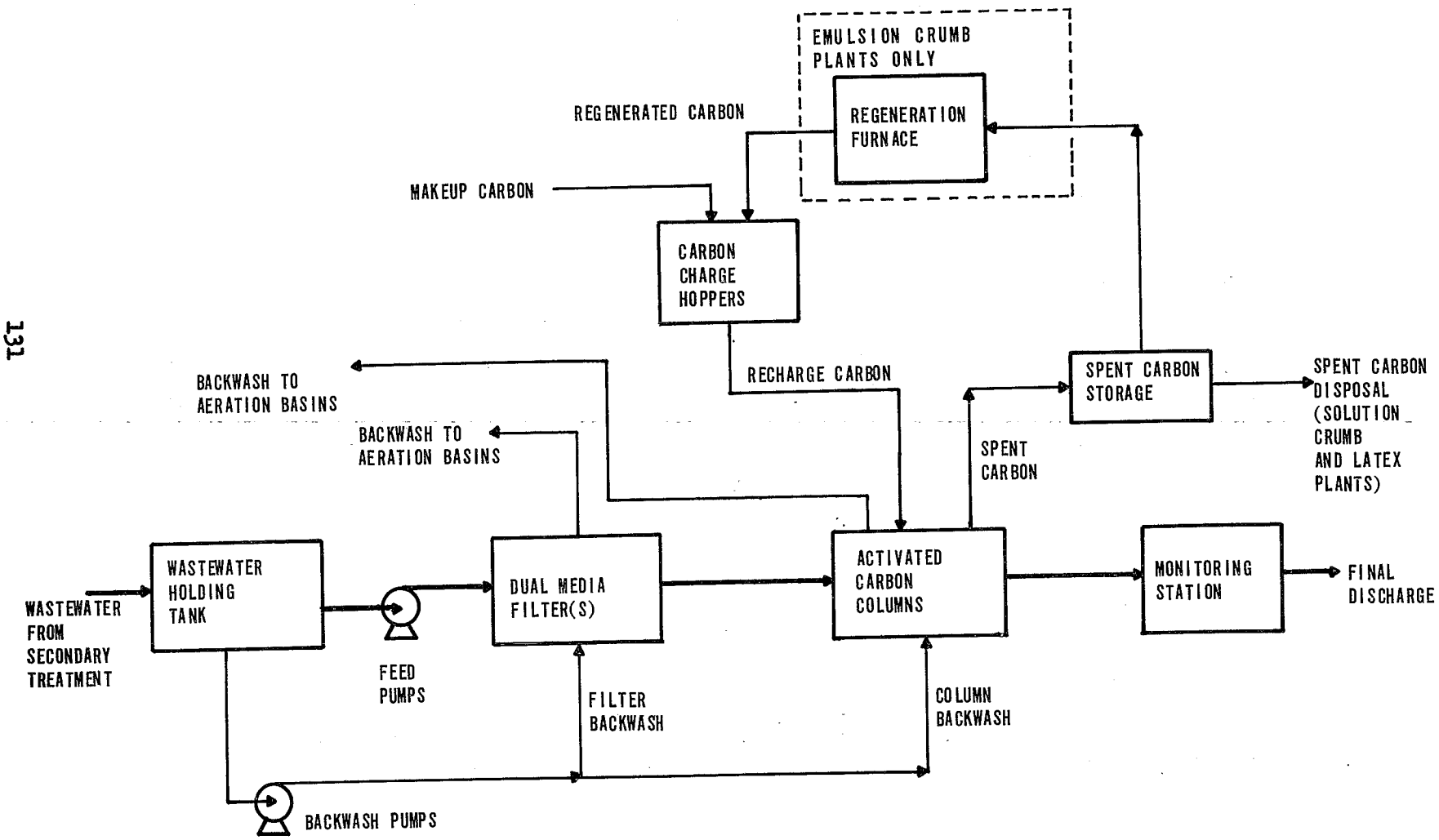

cost of the BATEA treatment will approximate 0.37 cents per kg (0.17 cents/lb) of production.

Since land costs vary appreciably between plant locations, it was decided to exclude land cost from the total capital cost estimates. Land costs must be added on an individual case basis.

Annual costs were computed using the following cost basis:

Item	Cost Allocation
Capitalization	10 percent of investment
Depreciation	5-yr straight line with zero salvage value
Operations and Maintenance	Includes labor and supervision, chemicals, sludge hauling and disposal, insurance and taxes (computed at 2 percent of the capital costs), and maintenance (computed at 4 percent of the capital cost).
Power	Based on $0.01/kw-hr for electrical power.

The short-term capitalization and depreciation write-off period is what is currently acceptable under current Internal Revenue Service Regulations pertaining to industrial pollution control equipment.

All costs were computed in terms of August, 1971 dollars which correspond to an Engineering News Record Index (ENR) value of 1580.

The total capital and annual costs for the model treatment technologies are presented for a typical emulsion crumb plant in Table 20, together with raw waste load and treated effluent quality.

Energy Requirements

The primary clarification and biological oxidation treatment technologies require electrical energy only for operation of equipment such as pumps and aerators. The filtration and activated carbon treatment system, in addition to power requirements, needs a fuel source to regenerate the carbon. The energy and power needs of the recommended treatment technologies are deemed to be low.

Non-Water Quality Aspects

Sludge cake is produced by vacuum filtration of the primary coagulation solids and the digested biological solids. Sludge disposal costs were based on sanitary landfill. Sludge incineration costs were not evaluated because the economics depend, to a large degree, on the accessibility of a landfill site and on the relative costs for sludge haulage and site disposal. The annual quantities of solid waste generated are:

Primary coagulated solids	2,940 cu m (3,900 cu yd)

TABLE 20

Emulsion Crumb Rubber Subcategory

Estimated Wastewater Treatment Costs for Different Degrees of Treatment based on a Typical Production Capacity of 128,000 metric tons/year

	Treatment or Control Technologies[1]			
	A	B	C	D
Investment[2]	$1,180,000	$2,002,000	$2,907,000	$2,993,000
Annual Costs				
Capital Costs	$ 118,000	$ 200,000	$ 291,000	$ 299,000
Depreciation	236,000	400,000	581,000	599,000
Operating and Maintenance Costs (excluding energy and power costs)	147,000	230,000	349,000	396,000
Energy and Power Costs	10,000	20,000	25,000	29,000
Total Annual Costs[2]	$ 511,000	$ 850,000	$1,246,000	$1,323,000

Parameters (kg/kkg production)	Raw Wastewater	Effluent Quality A	B	C	D
COD	20.00	12.80	8.00	5.04	2.08
BOD	2.13	2.00	0.40	0.08	0.08
Suspended Solids	7.20	1.28	0.65	0.16	0.16
Oil and Grease	1.40	0.32	0.16	0.08	0.08
Flow (L/10^3 kg production)	16,600				

[1] Technology A is Chemical Coagulation followed by Clarification.
Technology B is Technology A followed by Activated Sludge Secondary Treatment
Technology C is Technology B followed by Dual-Media Filtration plus Activated Carbon Treatment to produce 75% overall COD reduction.
Technology D is Technology B followed by Dual-Media Filtration plus Activated Carbon Treatment to produce 90% overall COD reduction.

[2] August 1971 Dollars.

Biological solids	245 cu m (325 cu yd)

Solution Crumb Subcategory

Selection of Control and Treatment Technologies

Only two degrees of control and treatment have been considered in the evaluation of treatment effectiveness versus cost data. Since latex solids are not contained in waste waters from solution crumb plants, clarification with chemical coagulation is not required; clarification in crumb pits is sufficient. In addition, after biological treatment, the residual COD concentration is much lower than is the case in the emulsion crumb counterpart. Consequently, carbon adsorption to only one level of overall COD reduction (65 percent removal) is reasonable. COD reductions greater than this would involve additional risk and uncertainty in the costing processes.

The first degree of treatment proposed includes primary clarification of crumb-laden waste water in dual-unit crumb pits, followed by biological treatment to remove soluble organics. The cost data have been developed on the basis of an activated sludge system for the same reasons as given previously for the emulsion crumb subcategory. Depending on land availability, biological treatment could be aerated lagoons and stabilization ponds. The second degree of treatment consists of dual-media filtration followed by activated carbon adsorption. Carbon adsorption was selected because it is the most currently feasible technique for reducing the soluble COD content.

Basis of the Treatment Cost Data

A profile of the solution crumb rubber industry defined the typical size of a solution crumb production facility as 30,000 metric tons per year. The waste water flow for such a plant would approximate 15.75 L/sec (250 gpm).

The model treatment plant using activated sludge biological treatment is shown in Figure 11. The treatment given by the proposed system is equivalent to BPCTCA.

The recommended treatment technology to attain BATEA presented in Figure 12, consists of dual-media filtration followed by activated carbon adsorption.

The influent raw waste loads upon which the treatment system designs were based were selected to represent the highest expected raw waste load in this subcategory. The same cost criteria used for emulsion crumb plants were applied for solution crumb rubber facilities.

The total capital and annual costs for the model treatment techniques for a typical solution crumb plant are presented in Table 21, together with the raw waste loads and treated effluent qualities.

Table 21

Solution Crumb Rubber Subcategory

Estimated Wastewater Treatment Costs for Different Degrees of Treatment based on a Typical Production Capacity of 30,000 metric tons/year

	Treatment or Control Technologies[1]	
	A	B
Investment[2]	$810,000	$1,182,000
Annual Costs		
Capital Costs	$ 81,000	$ 182,000
Depreciation	162,000	236,000
Operating and Maintenance Costs (excluding energy and power costs)	68,000	145,000
Energy and Power Costs	4,000	6,000
Total Annual Costs[2]	$315,000	$ 569,000

Parameters (kg/kkg production)	Raw Wastewaters	Effluent Quality	
		A	B
COD	6.00	3.94	2.08
BOD	0.80	0.40	0.08
Suspended Solids	2.20	0.65	0.16
Oil and Grease	0.25	0.16	0.08

[1] Technology A is Primary Clarification of Crumb Rinse Wastewaters followed by Activated Sludge Secondary Treatment.
Technology B is Technology A followed by Dual-Media Filtration plus Activated Carbon Treatment to produce 65% overall COD reduction.

[2] August 1971 Dollars.

has an annual capacity of 10,000 metric tons, and its waste water flow approximates 4.4 L/sec (70 gpm).

The model treatment plant, consisting of chemical coagulation and clarification followed by activated sludge biological treatment, is illustrated in Figure 11. This is equivalent to BPCTCA.

The recommended treatment technology to achieve best available technology economically achieveable , presented in Figure 12, includes dual-media filtration followed by activated carbon adsorption.

The treatment designs upon which the cost data are based correspond to the highest expected raw waste load within each category.

The same cost criteria used for the emulsion crumb subcategory were applied to latex rubber. See Table 22.

The total annual treatment costs for latex rubber production facilities can be presented in terms of incremental costs per unit of production. Treatment cost data for a typical latex plant producing 10,000 metric tons per year of latex rubber solids indicate that the BPCTCA treatment will cost 2.51 cents per kg (1.14 cents/lb) of latex solids produciton and that the BATEA treatment will produce an incremental cost of 1.01 cents per kg (0.46 cents/lb) of latex solids production.

Energy Requirements

Since on-site carbon regeneration is not proposed for economic reasons, the only power or energy requirement of these treatment systems is electric power for pumps and other motive equipment.

Non-Water Quality Aspects

Solid wastes are produced by chemical coagulation and clarification, wasted biological sludge, and spent activated carbon. For cost purposes, it is proposed that these all be hauled to a landfill. The annual quantities of solid wastes are listed below:

Primary coagulated solids	214 cu m (283 cu yd)
Biological solids	62 cu m (82 cu yd)
Spent carbon	126 cu m (167 cu yd)

Neither air quality nor noise levels will be adversely affected by the proposed treatment technologies.

Detailed Cost Information for All Subcategories

The following pages of this section contain detailed cost information used to develop the total capital and annual costs for best practicable control technology currently available (BPCTCA) and best available technology economically achievable (BATEA) treatment systems presented and discussed in Sections VIII, IX and X of this report. The individual

TABLE 22

Latex Rubber Subcategory

Estimated Wastewater Treatment Costs for Different Degrees of Treatment based on a Typical Production Capacity of 10,000 metric tons/yr.

	Treatment or Control Technologies[1]			
	A	B	C	D
Investment[2]	$361,000	$637,000	$784,000	$784,000
Annual Costs				
Capital Costs	$ 36,000	$ 64,000	$ 78,000	$ 78,000
Depreciation	72,000	127,000	157,000	157,000
Operating and Maintenance Costs (excluding energy and costs)	33,000	57,000	100,000	117,000
Energy and Power Costs	1,000	3,000	3,000	3,000
Total Annual Costs[2]	$142,000	$251,000	$338,000	$355,000

Parameters (kg/kkg production)	Raw Wastewater	Effluent Quality			
		A	B	C	D
COD	33.52	14.75	6.85	4.31	1.78
BOD	5.61	4.77	0.34	0.07	0.07
Suspended Solids	5.63	0.93	0.55	0.14	0.14
Oil and Grease	0.70	0.34	0.14	0.07	0.07

[1] Technology A is Chemical Coagulation followed by Clarification.
Technology B is Technology A followed by Activated Sludge Secondary Treatment.
Technology C is Technology B followed by Dual Media Filtration plus Activated Carbon Treatment to produce 87% overall COD reduction.
Technology D is Technology B followed by Dual Media Filtration plus Activated Carbon Treatment to produce 95% overall COD reduction.

[2] August 1971 Dollars.

The treatment costs for solution crumb plants can be expressed as an incremental cost per unit of production. The cost data prepared for a typical solution crumb rubber plant of 30,000 metric tons per year indicate that the BPCTCA treatment will cost 1.05 cents per kg (0.48 cents/lb) of production and that the additional costs of the BATEA treatment will approximate 0.85 cents per kg (0.38 cents/lb) of production.

Energy Requirements

The only energy or power need is electricity, and electricity consumption is low. The carbon is not regenerated on-site because of the unfavorable economics of small-scale carbon regeneration systems.

Non-Water Quality Aspects

Solid waste generation with this treatment system is associated with biological solids and spent activated carbon. The activated carbon canisters may be returned for regeneration off-site by the supplier. However, annual operating data have been based on disposal of the spent carbon at a landfill site. The annual quantities of solid waste generated are:

Biological solids	102 cu m (135 cu yd)
Spent carbon	140 cu m (185 cu yd)

Air quality and noise levels will not be significantly affected by the operations proposed in these treatment systems.

Latex Subcategory

Selection of Control and Treatment Technologies

Four degrees of control and treatment were considered in weighing the treatment effectiveness versus cost of treatment. These degrees of treatment are the same as for emulsion crumb waste water and include primary clarification, biological oxidation, and advanced treatment to two levels of COD removal.

Latex rubber waste water contains uncoagulated latex solids and the proposed primary treatment (chemical coagulation and clarification) is similar to that recommended for emulsion crumb waste waters. The biological treatment cost data have been based on activated sludge for the same reasons as were cited for the emulsion crumb subcategory. The advanced treatment cost data were modeled on two levels of overall COD reduction, 87 and 95 percent. Overall removals greater than 95 percent would call for undue technical risk, and uncertainty about capital and operating costs.

Basis of the Treatment Cost Data

A latex rubber industry profile was made to determine the typical size of a latex rubber production facility. The average, or typical, plant

unit processes included in each of the proposed treatment systems are discussed in considerable detail in Sections IX and X.

Detailed capital and cost estimates for a typically older tire and inner tube plant and a typically newer tire plant are presented in Tables 23 and 24 respectively.

Table 25 to 27 contain capital cost estimate breakdowns for BPCTCA control and treatment for typical emulsion crumb, solution crumb, and latex rubber production facilities.

Capital cost estimates are given in Tables 28 to 30 for typical emulsion crumb, solution crumb, and latex rubber plants which represent the incremental capital costs required to increase BPCTCA treatment to BATEA treatment.

Tables 31 to 38 describe the annual operating and maintenance costs associated with each of the BPCTCA and BATEA treatment technologies proposed for tire and inner tube plants and synthetic rubber production facilities.

Table 39 lists the major cost bases used to compute the annual operating and maintenance costs.

TABLE 23

BPCTCA and BATEA Treatment Capital Costs for a
Typical Old Tire and Inner Tube Plant
(ENR 1580 - August 1971 Costs)

Daily Raw Material Consumption = 205 metric tons
Estimated Total Effluent Flow = 2,004,000 gallons per day
Estimated Process Effluent Flow = 86,000 gallons per day

Description of Treatment Facility	Estimated Capital Cost
In-plant Sewer Segregation[1]	$ 89,000
In-plant Process Sumps and Pumps	32,000
Process Wastewater Force Main	31,000
Outdoor Wastewater Segregation System[2]	116,000
Outdoor Process Sumps and Sump Pumps	72,000
Oily Wastewater Storage Tank	8,000
Oil Separator	52,000
Filter	17,000
Waste Oil Handling	9,000
Process Effluent Sewer and Monitoring Station	18,000
Total Effluent Monitoring Station	18,000
Sub-Total	$462,000
Site Work	23,000
Electrical	55,000
Piping	69,000
Instrumentation	37,000
Sub-Total	$646,000
Engineering Fees	65,000
Contingency	97,000
Total Capital Cost (Investment)[3]	$808,000

[1]Includes sealing existing floor drains, installation of new process drains and sewers, and oily wastewater retainment curbing

[2]Includes roofing, curbing, and process wastewater drains and sewers

[3]Land Costs are not included

TABLE 24

BPCTCA and BATEA Treatment Capital Costs
for a Typical New Tire Plant
(ENR 1580 - August 1971 Costs)

Daily Raw Material Consumption = 205 metric tons
Estimated Total Effluent Fow = 569,000 gallons per day
Estimated Process Effluent Flow = 86,000 gallons per day

Description of Treatment Facility	Estimated Capital Costs
In-plant Sewer Segregation[1]	$ 17,000
In-plant Process Sumps and Pumps	16,000
Process Wastewater Force Main	16,000
Outdoor Wastewater Segregation System[2]	116,000
Outdoor Process Sumps	72,000
Oily Wastewater Storage Tank	8,000
Oil Separator	52,000
Filter	17,000
Waste Oil Handling	9,000
Process Effluent Sewer and Monitoring Station	18,000
Total Effluent Monitoring Station	18,000
Sub-Total	$359,000
Site Work	18,000
Electrical	43,000
Piping	54,000
Instrumentation	29,000
Sub-Total	$503,000
Engineering Fees	50,000
Contingency	75,000
Total Capital Cost (Investment)[3]	$628,000

[1]Includes installation of new process drains and sewers, and oily wastewater retainment curbing.

[2]Includes roofing, curbing, and process wastewater drains and sewers.

[3]Land Costs are not included.

Table 25

BPCTCA Treatment Capital Costs for a Typical Emulsion Crumb Rubber Plant (ENR 1580 - August 1971 Costs)

Annual Production Capacity = 128,000 metric tons

Estimated Wastewater Flow = 1,483,000 gallons per day

Description of Treatment Unit	Estimated Capital Cost
Equalization Basin	$ 314,000
Pumping Station	19,000
pH Adjustment and Coagulant Feed	28,000
Nutrient Addition	3,000
Reactor-Clarifier	101,000
Primary Sludge Pumps and Station	33,000
Aeration Basin	119,000
Secondary Clarifier	120,000
Sludge Return Pumps and Station	66,000
Biological Sludge Thickener	33,000
Aerobic Digestion	128,000
Combined Sludge Thickener	45,000
Vacuum Filter	68,000
Sludge Handling System	13,000
Control Building	38,000
Monitoring Station	16,000
Sub-Total	$1,144,000
Site Work	57,000
Electrical	137,000
Piping	172,000
Instrumentation	92,000
Sub-Total	$1,602,000
Engineering Fees	160,000
Contingency	240,000
Total Capital Cost (Investment)[1]	$2,002,000

[1] Land Costs are not included.

Table 26

BPCTCA Treatment Capital Costs for a Typical Solution Crumb Rubber Plant (ENR 1580 - August 1971 Costs)

Annual Production Capacity = 30,000 metric tons

Estimated Wastewater Flow = 353,000 gallons per day

Description of Treatment Unit	Estimated Capital Cost
Crumb Rinse Overflow Pits	$ 37,000
Equalization Basin	72,000
Pumping Station	54,000
Nutrient Addition and Neutralization	2,000
Aeration Basin	62,000
Secondary Clarifier	77,000
Sludge Return Pumps and Station	40,000
Biological Sludge Thickener	13,000
Aerobic Digestion	48,000
Vacuum Filter	29,000
Control Building	13,000
Monitoring Station	16,000
Sub-Total	$ 463,000
Site Work	23,000
Electrical	56,000
Piping	69,000
Instrumentation	37,000
Sub-Total	$ 648,000
Engineering Fees	65,000
Contingency	97,000
Total Capital Cost (Investment)[1]	$ 810,000

[1] Land Costs not included.

Table 27

BPCTCA Treatment Capital Costs for a
Typical Latex Rubber Plant
(ENR 1580 - August 1971 Costs)

Annual Production Capacity = 10,000 metric tons
Estimated Wastewater Flow = 101,000 gallons per day

Description of Treatment Unit	Estimated Capital Cost
Equalization Basin	$ 49,000
Pumping Station	3,000
pH Adjustment and Coagulant Feed	8,000
Nutrient Addition	1,000
Mix and Flocculation Tanks	8,000
Clarifier	34,000
Primary Sludge Pumps and Station	4,000
Aeration Basin	62,000
Secondary Clarifier	34,000
Sludge Return Pumps and Station	4,000
Biological Sludge Thickener	11,000
Aerobic Digestion	46,000
Combined Sludge Thickener	16,000
Vacuum Filter	42,000
Control Building	30,000
Monitoring Station	13,000
Sub-Total	$ 365,000
Site Work	18,000
Electrical	44,000
Piping	54,000
nstrumentation	29,000
Sub-Total	$ 510,000
Engineering Fees	51,000
Contingency	76,000
Total Capital Cost (Investment)[1]	$ 637,000

[1] Land Costs not included.

Table 28

BATEA Treatment Incremental Capital Costs for a Typical Emulsion Crumb Rubber Plant (ENR 1580 - August 1971 Costs)

Annual Production Capacity = 128,000 metric tons
Estimated Wastewater Flow = 1,483,000 gallons per day

Description of Treatment Unit	Estimated Capital Cost
Backwash Holding Tank	$ 13,000
Filter Feed Pumps	18,000
Backwash Pumps	20,000
Dual Media Filters	145,000
Activated Carbon Columns	227,000
Carbon Charge System	23,000
Carbon Regeneration Furnace	122,000
Subtotal	$ 568,000
Site Work	28,000
Electrical	68,000
Piping	84,000
Instrumentation	45,000
Subtotal	$ 793,000
Engineering Fees	79,000
Contingency	119,000
Total Capital Cost (Investment)[1]	$ 991,000

[1] Land Costs are not included

Table 29

BATEA Treatment Incremental Capital Costs
for a Typical Solution Crumb Rubber Plant
(ENR 1580 - August 1971 Costs)

Annual Production Capacity = 30,000 metric tons
Estimated Wastewater Flow = 353,000 gallons per day

Description of Treatment Unit	Estimated Capital Cost
Backwash Holding Tank	$ 13,000
Filter Feed Pumps	7,000
Backwash Pumps	18,000
Dual Media Filters	73,000
Activated Carbon Columns	88,000
Carbon Charge System	14,000
Sub-Total	$213,000
Site Work	11,000
Electrical	25,000
Piping	31,000
Instrumentation	17,000
Sub-Total	$297,000
Engineering Fees	30,000
Contingency	45,000
Total Capital Cost (Investment)[1]	$372,000

[1] Land Costs are not included

Table 30

BATEA Treatment Incremental Capitals Costs
for a Typical Latex Rubber Plant
(ENR 1580 - August 1971 Costs)

Annual Production Capacity = 10,000 metric tons

Estimated Wastewater Flow = 101,000 gallons per day

Description of Treatment Unit	Estimated Capital Cost
Backwash Holding Tank	$ 4,000
Filter Feed Pumps	4,000
Backwash Pumps	7,000
Dual Media Filters	21,000
Activated Carbon Columns	38,000
Carbon Charge System	13,000
Sub-Total	$ 86,000
Site Work	4,000
Electrical	9,000
Piping	12,000
Instrumentation	6,000
Sub-Total	$117,000
Engineering Fees	12,000
Contingency	18,000
Total Capital Cost (Investment)[1]	$147,000

[1] Land Costs are not included

Table 31

BPCTCA and BATEA Operating and Maintenance Costs for a Typical Old Tire and Inner Tube Plant

Daily Raw Material Consumption = 205 metric tons

Estimated Total Effluent Flow = 2,004,000 gallons per day

Estimated Process Effluent Flow = 86,000 gallons per day

Description of Cost Item	Annual Cost
Absorbent	$ 800
Waste Oil Disposal	300
Sludge Disposal	1,100
Labor	5,400
Power and Energy	1,000
Maintenance	12,900
Insurance and Taxes	6,500
Total Annual Operating and Maintenance Cost	$28,000

Table 32

BPCTCA and BATEA Operating and Maintenance Costs for a Typical New Tire Plant

Daily Raw Material Consumption = 205 metric tons

Estimated Total Effluent Flow = 2,004,000 gallons per day

Estimated Process Effluent Flow = 86,000 gallons per day

Description of Cost Items	Annual Cost
Absorbent	$ 800
Waste Oil Disposal	100
Sludge Disposal	1,100
Labor	5,400
Power and Energy	1,000
Maintenance	11,700
Insurance and Taxes	5,900
Total Annual Operating and Maintenance Cost	$26,000

Table 33

BPCTCA Operating and Maintenance Costs
for a Typical Emulsion Crumb Rubber Plant

Annual Production Capacity = 128,000 metric tons

Estimated Wastewater Flow = 1,483,000 gallons per day

Description of Cost Item	Annual Cost
Chemicals	
Nutrients	$ 9,500
Acid/Alkali	15,700
Coagulating Chemicals	29,000
Filter Aid	9,200
Solid Waste Disposal	11,700
Labor	39,500
Power and Energy	20,000
Maintenance	76,900
Insurance and Taxes	38,500
Total Annual Operating and Maintenance Cost	$250,000

Table 34

BPCTCA Operating and Maintenance Costs
for a Typical Solution Crumb Rubber Plant

Annual Production Capacity = 30,000 metric tons

Estimated Wastewater Flow = 353,000 gallons per day

Description of Cost Item	Annual Cost
Chemicals	
Nutrients	$ 2,500
Acid/Alkali	3,500
Filter Aid	300
Solid Waste Disposal	700
Labor	14,600
Power and Energy	4,000
Maintenance	31,100
Insurance and Taxes	15,300
Total Annual Operating and Maintenance Costs	$72,000

Table 35

BPCTCA Operating and Maintenance Costs
for a Typical Latex Rubber Plant

Annual Production Capacity = 10,000 metric tons

Estimated Wastewater Flow = 101,000 gallons per day

Description of Cost Item	Annual Cost
Chemicals	
Nutrients	$ 600
Acid/Alkali	1,200
Coagulating Chemicals	2,000
Filter Aid	1,000
Solid Waste Disposal	1,000
Labor	14,600
Power and Energy	3,000
Maintenance	24,400
Insurance and Taxes	12,200
Total Annual Operating and Maintenance Cost	$60,000

Table 36

BATEA Incremental Operating and Maintenance Cost for a Typical Emulsion Crumb Rubber Plant

Annual Production Capacity = 128,000 metric tons

Estimated Wastewater Flow = 1,483,000 gallons per day

Description of Cost Item	Annual Cost
Activated Carbon Regeneration	$84,500
Labor	24,500
Power and Energy	9,000
Maintenance	38,000
Insurance and Taxes	19,000
Total Annual Operating and Maintenance Costs	$175,000

Table 37

BATEA Incremental Operating and Maintenance Costs for a Typical Solution Crumb Rubber Plant

Annual Production Capacity = 30,000 metric tons

Estimated Wastewater Flow = 353,000 gallons per day

Description of Cost Item	Annual Cost
Activated Carbon Purchase	$37,400
Spent Carbon Disposal	800
Labor	17,500
Power and Energy	2,000
Maintenance	14,200
Insurance and Taxes	7,100
Total Annual Operating and Maintenance Costs	$79,000

Table 38

BATEA Incremental Operating and Maintenance Cost for a Typical Latex Rubber Plant

Annual Production Capacity = 10,000 metric tons

Estimated Wastewater Flow = 101,000 gallons per day

Description of Cost Item	Annual Cost
Activated Carbon Purchase	$33,500
Spent Carbon Disposal	600
Labor	17,500
Power and Energy	300
Maintenance	5,400
Insurance and Taxes	2,700
Total Annual Operating and Maintenance Costs	$60,000

Table 39

Operational and Maintenance Cost Bases

Chemical Costs	
Nutrients	
Dibasic Ammonium Phosphate	$100/L.ton
Ammonium Sulfate	$ 50/L.ton
Coagulating Aids	
Alum	$ 44/L.ton
Clay	$ 50/L.ton
Polyelectrolyte	$ 1/lb.
Filter Aid	$ 1/lb.
Activated Carbon	$0.30/lb.
Oil Absorbent	$900/L.ton
Solid Waste Disposal Costs	
Oil Disposal	$ 5/55 gal.drum
Sludge Disposal	$ 1/cu.yd.
Haulage (10 cu.yd. dumpster)	$20/trip
Labor	
Operator	$ 5/hour
Supervisor	$ 7/hour
Power	
Electricity	$0.01/Kwhr.
Fuel Oil	$0.18/gal.
Maintenance	3.2% of Total Capital Cost
Insurance	1.6% of Total Capital Cost

SECTION IX

BEST PRACTICABLE CONTROL TECHNOLOGY CURRENTLY AVAILABLE -- EFFLUENT LIMITATIONS

Tire and Inner Tube Facilities

Identification of Best Practicable Control Technology Currently Available

The best control and treatment technologies currently in use emphasize in-house control of solution wastes with end-of-pipe treatment of combined process and nonprocess waste waters. However, as discussed previously, end-of-pipe treatment of process waste waters after combination with nonprocess waste waters is considered inadequate.

Of the plants visited, only one plant performs a totally adequate end-of-pipe treatment of all process waste water streams. The treatment facility involves the use of holding lagoons for combined process and nonprocess effluents and the re-use of the waste water for irrigation of farm land. The very large land requirements involved keep this type of treatment from being applied to the industry as a whole. Other end-of-pipe treatment facilities examined were not very effective in removal of the oil constitutent in the wastes, due to dilution by nonprocess waste waters.

There are many in-plant control and treatment facilities. Recirculation of the soapstone solution was considered adequate and effective. However, the weekly washing and dumping of the system in most plants reduced this effectiveness. Oil sumps and separators are common to the tire industry, but their effectiveness is reduced by dilution with other wastes or by improper maintenance.

Since process wastes are best treated before dilution with nonprocess waste waters and because no plant obtained effective control and treatment for all the waste waters it generated, the proposed treatment technology for a typical plant is a combination of the best features of various plants examined and visited.

Since only the loadings vary between the Older Tire and Inner Tube Production Facilities subcategory and the Newer Tire Production Facilities subcategory, the treatment schemes described below will be the same for both.

Basically, the technology employed consists of:

1. Elimination of any discharge of soapstone or latex-dip solution.
2. Segregation, control, and treatment of all oily waste streams.

A flow diagram of the proposed system is shown in Figure 10.

Zero discharge of soapstone and latex solutions is currently practiced by production facilities in each of the subcategories. Elimination of soapstone solution discharges involves:

1. Recycle of soapstone solution.
2. Installation of curbing around the soapstone dipping area.
3. Sealing of drains in the dipping area.
4. Reuse of the recirculating system washwater as make-up for fresh soapstone solution.

The re-use of the recirculating system washwater is the key to zero discharge of this waste. In emptying the system for cleaning, the soapstone used should be stored in tanks. The washwater used should also be collected and stored. Once the system is cleaned, stored soapstone can then be returned to the system for use in the new production batch. The collection and stored washwater can then be re-used as make-up water to the soapstone bath during the normal production run.

Eliminating the discharge of latex solution is achieved by:

1. The use of curbing around the latex dipping area.
2. Sealing of all drains in the dipping area.
3. Containment of all waste waters from the area.

Several plants have already achieved zero discharge by these methods. The contained and collected wastes are disposed of off-site in a landfill.

Control and treatment of oily waste streams involves segregation, collection, and treatment of these wastes. The wastes to be segregated include runoff from oil storage and unloading areas and leakage and spills in the process areas, as shown in Figure 10. Press and mill basins, when present, are included in the process area.

To minimize the process water raw waste load, all process water should be isolated from the nonprocess waste water used in the plant. This can be achieved by collecting drippings from machinery, the latex dip area and the molding and curing areas, etc. in sumps. The sumps can be either pumped to the process waste water treatment system or collected batchwise and hauled to the treatment or disposal area. Only as the cost benefits would indicate, would ripping out and installing new sewer lines be recommended. Once isolated, these waste waters are collected in sumps located in strategic areas throughout the plant. Waste flows will be intermittent by nature and, therefore, a sizable flow rate will hardly ever be obtained without first collecting all wastes in centralized locations. Wastewaters collected in these sumps will be periodically pumped to an API-type gravity separator, where the separable oil and solids fraction is removed. To provide for large spills or leakage of a major water supply line, a 37,850-liter (10,000-gal.) storage tank is provided.

Separated oil is removed by a manually operated slotted pipe. A decant tank is provided to allow water removed with the oil to settle out. Concentrated oil-water mixtures are then removed from the decant tank, drummed, and sealed, and sent to a landfill. Water removed from the tank is pumped back to the separator.

Settleable solids collected in the separator are periodically removed and also sent to a landfill. The separator is provided with two dual-operating chambers in order to provide for uninterrupted service during clean-out.

The gravity separator is provided with a straw filter to remove any large oil globules still remaining due to possible short circuiting or unforeseen peak overload conditions. Additional treatment for oil removal is obtained by passing the effluent from the separator through an absorbent filter.

Effluent Loadings Attainable with Proposed Technologies

Based on the control technology data obtained from tire manufacturer sources, and treatment data obtained from industries having similar waste water problems, it was determined that the proposed control and treatment technologies are compatible with the following effluent quality for both older Tire and inner tube and newer tire facilities:

Suspended Solids	40 mg/L
Oil and Grease	10 mg/L
pH	6.0 to 9.0

It is expected that the use of an API separator will result in an effluent oil concentration of 30 mg/L. The use of an absorbent filter will further reduce the effluent oil concentration to 10 mg/L.

A reduction of suspended solids to 40 mg/L will result from the use of an API type separator. Additional reduction is deemed likely after pasage through the absorbent filter.

Effluent quality is best expressed in terms of the waste load per unit of material consumed and is thereby independent of the flow and size of the plant. Recommended limitations for the proposed BPCTCA are as follows:

Suspended solids	0.064 kg/kkg (lb/1000 lb) of raw material
Oil	0.016 kg/kkg (lb/1000 lb) of raw material
pH	6.0 to 9.0

Through the application of treatment technologies equivalent in performance to gravity separation and filtration, two of the plants visited are currently achieving the proposed standards for oil, Table 40. In addition, four of the plants visited are achieving the proposed standard for suspended solids. The plants achieving the oil standard are both classified as "new" for the basis of this report. However, one of these plants (Plant D) is classified as old. Recent in-plant

TABLE 40

Raw Waste Loads and Final Effluent Quality of Process Wastewaters from Tire and Inner Tube Facilities

	Flow L/kkg, (gal/1,000 lb) of raw material	COD kg/kkg, (lb/1,000 lb) of raw material		BOD kg/kkg, (lb/1,000 lb) of raw material		Oil kg/kkg, (lb/1,000 lb) of raw material	
		Raw	Effluent	Raw	Effluent	Raw	Effluent
New Tire Facilities							
A	290 (35)	1.57	0.196	0.882	0.144	0.248	0.008
B	1650 (198)	N.A.	N.A.	0.013	0.013	0.075	0.075
C	N.A.	N.A.	N.A.	N.A.	N.A.	0.297	0.046
D[1]	N.A.	0.193	0.193	0.064	0.064	0.008	0.008
Old Tire Facilities							
E	110 (13)	0.046	0.046	0.017	0.017	0.027	0.027
F	700 (84)	N.A.	N.A.	0.57	0.57	0.650	0.560
G	590 (71)	N.A.	N.A.	0.001	0.001	0.260	0.260
H	4300 (516)	2.199	0.825	0.520	0.122	0.163	0.163
I	769 (92)	N.A.	N.A.	2.610	2.610	0.172	0.172

[1] Raw Waste load determined downstream of oil separators, where the suspended solids and oil levels are reduced.

N.A. Data not available.

modifications to both manufacturing and process waste water treatment and control facilities were comprehensive. As a result this plant can be considered in the newer tire plant subcategory for analysis and waste water management purposes. The control and treatment technologies employed by this plant consisted of segregation of oil and suspended solids laden wastes and the use of local gravity separators to treat these contaminated waste waters. Similar modifications in other old plants, would result in similar performance levels supporting the selection of the proposed effluent limitations.

Although the application of control and treatment technologies designed to reduce oil and suspended solid concentrations in the process waste waters for both older and newer tire plants will be similar to those employed at Plant D, the implementation costs for such technologies at old facilities will, in general, be somewhat higher than the costs at newer tire plants.

Synthetic Rubber Industry

Identification of Best Practicable Control Technology Currently Available

In view of the fact that all subcategories of the synthetic rubber industry are highly technical and proprietary in nature, it is not possible to base effluent limitation guidelines and standards of performance on in-plant control technologies which might impact on processing procedures and product quality. Instead, these guidelines have been formulated around the best practicable end-of-pipe treatment technologies employed by the synthetic rubber industry. In order to achieve the contaminant reductions recommended for this guideline, the synthetic rubber industry will require better housekeeping and maintenance practices, as well as in-plant processing modifications, to assist the end-of-pipe treatment plant in attaining the required reductions. The effluent limitations have been based on the effluent quality and contaminant removal efficiencies of well designed and properly-operated treatment facilities.

Emulsion Crumb Subcategory

The coagulation liquor and crumb rinse overflow stream should be passed through crumb pits to remove crumb rubber fines. These pits should be dual units so that good crumb separation can be achieved during pit unit cleaning operations. Figure 11 shows a hypothetical end-of-pipe secondary treatment facility applicable to the treatment of emulsion crumb waste waters. This treatment includes chemical coagulation and clarification, and biological treatment. The total plant effluent should be passed through an equalization basin, providing approximately 24 hours detention, to smooth out waste load peaks and to equalize hydraulic flow. The equalization basin should be aerated to insure good mixing, prevent anaerobic conditions, and assist in the biological oxidation process.

From the equalization basin, the waste waters are pumped to a mixing basin, where the pH of the waste waters is adjusted to achieve optimum coagulation conditions. The desired pH value is approximately neutral (pH = 7) and is suitable for biological treatment with no changes. Nutrients to facilitate biological treatment will also be added in this basin.

After pH adjustment, the waste waters flow into a reactor-clarifier, where coagulating chemicals (alum and polyelectrolyte) are added in the reactor compartment. A clay slurry is also added, to weight down the coagulated rubber solids. The waste water flows from the reactor compartment to the clarifier, where the settleable solids and coagulated solids settle and are removed. The clarified waste water overflows the clarifier and enters the biological treatment system. The clarified waste water flows into aeration basins where it is well mixed with biological solids. Microorganisms synthesize new biological solids from organic matter contained in the waste water. At the same time, some soluble matter is consumed for energy purposes using oxygen supplied by aerators in the basin. The result is that soluble material is converted to insoluble biological solids and the BOD of the waste water is reduced. The mixed liquor containing biological solids suspended in the waste water overflows the aeration basin to the secondary clarifier.

The solids in the mixed liquor are settled in the secondary clarifier, and the clarified waste water overflows and enters an effluent monitoring station, where the flow is recorded and an automatic 24-hour composite sample is collected.

Part of the settled biological solids is returned to the aeration basins to maintain the mixed liquor solids concentration in the basin. The remainder of the bio-solids must be wasted from the system as a sludge.

The waste sludge is first thickened in a gravity thickener with the supernatant returning to the head of the aeration basins. The thickened sludge underflow enters an aerobic digestor, where the biological sludge is wasted by endogenous respiration utilizing oxygen to aerate and reduce the bio-solid bulk. This process is referred to as aerobic digestion.

This digested sludge is then mixed with the primary solids underflows from the reactor-clarifier unit and enters a secondary thickener. The clear supernantant from this thickener is also recycled to the aeration basins. The thickened underflow is then discharged to a vacuum filter for further conditioning and concentration.

A drum-type vacuum filter separates thickened sludge into a dewatered cake, which discharges by belt conveyor to a dumpster bin and into a filtrate that is recycled to the aeration basin. The dewatered sludge cake is biologically stable and can be disposed of at a sanitary landfill. Filter aid and precoat preparations are used to assist and maintain the quality of the filtrate.

Solution Crumb Subcategory

The plant waste waters are first passed through crumb pits to remove rubber crumb fines. As previously noted in the discussion of the emulsion crumb subcategory, these pits should be dual units.

Figure 11 represents a hypothetical secondary treatment alternative which is applicable to solution crumb rubber waste waters, as well as to the emulsion crumb waste waters previously discussed. Since solution crumb waste waters do not contain uncoagulated latex solids, and if adequate separation of the rubber fines has been achieved in the crumb pits, neither the chemical coagulation process nor the primary clarifier is required. The waste waters can then pass from the pH and nutrient addition basin directly into the aeration basin (refer to Figure 11). In addition, since there are no primary solids, the second thickener is not necessary and the wasted biological sludge passes directly from the digester to the vacuum filter. The solution crumb secondary waste water treatment facility is similar to the emulsion crumb waste waters in all other aspects.

Latex Subcategory

The model secondary waste water treatment facility illustrated in Figure 11 is also applicable at latex rubber plants. Since latex plant waste waters contain uncoagulated latex solids, primary clarification assisted by chemical coagulation is required. However, because latex plants are considerably smaller than emulsion crumb plants, the waste water flow rate is much lower. The lower flow rates indicate the use of separate rapid-mix, flocculator, and clarifier units, since small reactor-clarifiers are not practicable in small diameters due to reduction in efficiency, mixing, and settlement of solids.

Other than this basic difference (due to flow rate only) in the design of the primary clarification equipment, the secondary treatment facility for latex plant waste waters is identical to that described for emulsion crumb waste water.

Effluent Loadings Attainable with Proposed Technologies

Emulsion Crumb Subcategory

Based on raw waste load and the control and treatment data from emulsion crumb plants, it was determined that the described proposed control and treatment technologies are compatible with in the following effluent quality:

COD	500 mg/L
BOD	25 mg/L
Suspended Solids	40 mg/L
Oil and Grease	10 mg/L
pH	6.0 to 9.0

The effluent waste loads, resulting from the application of treatment technologies equivalent to chemical coagulation with clarification and

biological treatment, constitute the best practicable control and treatment technology standards currently available for the emulsion crumb subcategory. Recommendations for proposed limitations are:

COD	8.00 kg/kkg(lb/1000 lb) of product
BOD	0.40 kg/kkg(lb/1000 lb) of product
Suspended Solids	0.65 kg/kkg(lb/1000 lb) of product
Oil and Grease	0.16 kg/kkg(lb/1000 lb) of product
pH	6.0 to 9.0

Table 41 presents the raw waste and final effluent loads for the exemplary plants producing various emulsion crumb products. Data was obtained by plant visits and company historical records. Although three plants were sampled, six cases of emulsion crumb production were studied.

The proposed BOD, suspended solids, and oil and grease effluent limitations for BPCTCA are commensurate with the calculated effluent loads achieved by the selected plants. The values of the proposed limitations for BOD, suspended solids, and oil and grease are based on typical industry waste water flow rates, calculated raw waste loads, and established performance characteristics (concentrations) of conventional biological treatment systems.

The proposed COD effluent limitation for BPCTCA is higher than the normal COD effluent load from the selected plants. This value was conservatively selected in order to produce effluent limitations that reflect minor processing variations and climatic conditions. Since in practice the effluent COD from a biological treatment facility is essentially independent of the treatment design and operation, it is not feasible to develop COD limitations for a control and treatment technology, namely biological treatment, that does not effectively remove COD. The important parameters associated with the BPCTCA are therefore BOD, suspended solids, oil and grease.

Solution Crumb Subcategory

Industry raw waste load and the control and treatment data indicate that proposed control and treatment technologies for solution crumb rubber waste water are compatible with the following effluent quality:

COD	245 mg/L
BOD	25 mg/L
Suspended Solids	40 mg/L
Oil and Grease	10 mg/L
pH	6.0 to 9.0

Effluent quality can also be expressed in terms of effluent waste loads, which are independent of waste water flow. These effluent waste loads, resulting from the application of treatment technologies equivalent to primary clarification and biological treatment, constitute the best practicable control and treatment technology standards currently avail-

TABLE 41

Raw Waste Loads and Final Effluent Quality for Emulsion Crumb Plants[1]

Plant	Product	Flow L/kkg, (gal/1,000 lb)	COD, kg/kkg Raw	COD, kg/kkg Effluent	BOD, kg/kkg Raw	BOD, kg/kkg Effluent	SS[2], kg/kkg Raw	SS[2], kg/kkg Effluent	Oil[2], kg/kkg Raw	Oil[2], kg/kkg Effluent
J	SBR and NBR Part Oil and Carbon Black Extended	15,000 (1,860)	11.98	3.36	N.A.	0.26	3.73	0.41	2.09	0.02
K	SBR Part Oil Extended	18,500 (2,220)	22.23	5.80	2.13	0.40	2.30	0.40	0.13	0.04
K	SBR Oil Extended	18,500 (2,220)	19.76	5.15	2.13	0.40	11.31	1.98	3.54	1.06
L	SBR Oil and Carbon Black Extended	16,500 (1,980)	8.72	1.48	2.84	0.51	3.94	0.67	0.48	0.02
L	SBR "Hot", Non-Extended	15,500 (1,860)	29.24	4.96	2.84	0.51	N.A.	2.03[3]	1.31	0.04
L	SBR Non-Extended	15,500 (1,860)	25.87	4.40	2.84	0.51	11.94	2.03	1.45	0.04

[1] Includes utility wastewaters.

[2] Raw waste load determined downstream of crumb pits, where the suspended solids and oil levels are reduced.

[3] Specific data not available. Based on other similarities of the wastewaters from "Hot" and "Cold" Non-Extended types, effluent SS was estimated at 2.03 kg/kkg of product.

N.A. Data not available.

able for the solution crumb subcategory. Recommendations for proposed limitations are:

COD	3.92 kg/kkg(lb/1000 lb) of product
BOD	0.40 kg/kkg(lb/1000 lb) of product
Suspended Solids	0.65 kg/kkg(lb/1000 lb) of product
Oil and Grease	0.16 kg/kkg(lb/1000 lb) of product
pH	6.0 to 9.0

The raw waste and final effluent loads for selected solution crumb rubber plants are given in Table 42. Five plants were visited and eight types of solution crumb product were sampled.

Since most solution crumb is produced at the same location as emulsion crumb rubber, it was necessary to calculate the raw waste load contribution of solution crumb process in the treatment system final effluent. The values of the proposed limitations for BOD, suspended solids, and oil and grease, therefore, are based on typical waste water flow rates, calculated raw waste loads, and established performance characteristics (concentrations) of conventional biological treatment systems. The limitations proposed for suspended solids and oil and grease, are in general agreement with the effluent loads achieved by the selected plants. The BOD limitation, however, is marginally higher than the effluent loads produced by some of the cited plants. Since the best BOD effluent load achievable by a solution crumb rubber plant is dependent on the waste water flow and the inherent process limitations of biological treatment, an effluent limitation has been recommended for BOD corresponding to the effluent quality of a well designed and operated biological treatment facility.

The proposed COD effluent limitation for BPCTCA is higher than the COD effluent from many of the selected plants. This value was selected as conservative in order to produce effluent limitations that reflect minor processing variations and climatic conditions throughout the country. The salient parameters for the BPCTCA are BOD, suspended solids, oil and grease, and pH.

Latex Subcategory

Raw waste load and the control and treatment data do not demonstrate adequate treatment of the waste water from the selected plants. The below listed performance characteristics are imposed upon this subcategory as justified by established performance characteristics of conventional biological and chemical coagulation systems.

COD	500 mg/L
BOD	25 mg/L
Suspended Solids	40 mg/L
Oil and Grease	10 mg/L
pH	6.0 to 9.0

TABLE 42

Raw Waste Loads and Final Effluent Quality for Solution Crumb Plants[1]

Plant	Product	Flow L/kkg, (gal/1,000 lb)	COD, kg/kkg Raw	COD, kg/kkg Effluent	BOD, kg/kkg Raw	BOD, kg/kkg Effluent	SS[2], kg/kkg Raw	SS[2], kg/kkg Effluent	Oil[2], kg/kkg Raw	Oil[2], kg/kkg Effluent
K	SBR Oil Extended	10,500 (1,260)	4.04	1.06	0.09	0.02	0.81	0.14	N.A.	N.A.
K	SBR Carbon Black Extended	17,800 (2,137)	20.80	5.43	0.18	0.03	2.20	0.38	N.A.	N.A.
L	PBR Oil Extended	28,500 (3,421)	18.40	3.14	1.55	0.27	5.72	0.97	2.43	0.07
L	SBR Non-Extended	14,700 (1,765)	13.28	2.26	0.82	0.15	1.79	0.31	1.43	0.04
M[3]	PBR Non-Extended	3,400 (408)	0.17	0.17	0.06	0.06	0.05	0.05	0.07	0.07
N	IR Non-Extended	11,900 (1,429)	3.61	1.73	1.37	0.26	N.A.	0.92	0.01	N.A.
N	PBR Part Oil Extended	11,900 (1,429)	3.01	1.45	1.37	0.26	5.38	0.92	2.32	0.27
O	PBR, IR, EPDM Part Oil and Carbon Black Extended	29,000 (3,481)	5.33	1.17	3.57	0.03	3.71	0.22	0.23	0.02

[1] Includes utility wastewaters.

[2] Raw waste load determined downstream of crumb pits, where the suspended solids and oil levels are reduced.

[3] No treatment facilities exist at this plant.

N.A. Data not available.

Effluent quality can also be expressed in terms of effluent waste loads, which are independent of waste water flow. These effluent waste loads, resulting from the application of treatment technologies equivalent to primary clarification with chemical coagulation followed by biological treatment, constitute the best practicable control and treatment technology standards currently available for the latex rubber subcategory. Recommendations for proposed limitations are:

COD	6.85 kg/kkg(lb/1000 lb) of product
BOD	0.34 kg/kkg(lb/1000 lb) of product
Suspended Solids	0.55 kg/kkg(lb/1000 lb) of product
Oil and Grease	0.14 kg/kkg(lb/1000 lb) of product
pH	6.0 to 9.0

The raw waste and final effluent loads for two selected latex rubber plants are given in Table 43.

TABLE 43

Raw Waste Loads and Final Effluent Quality for Latex Rubber Plants[1]

Plant	Product	Flow		COD, kg/kkg		BOD, kg/kkg		SS, kg/kkg		Oil, kg/kkg	
		L/kkg,	(gal/1,000 lb)	Raw	Effluent	Raw	Effluent	Raw	Effluent	Raw	Effluent
P	SBR and NBR	14,900	(1,790)	36.37	8.62	5.61	0.75	6.70	2.54	N.A.	N.A.
Q	SBR	12,500	(1,500)	33.52	6.44	5.01	2.44	5.63	1.02	0.33	0.16

[1] Includes utility wastewaters.

N.A. Data not available.

SECTION X

BEST AVAILABLE TECHNOLOGY ECONOMICALLY ACHIEVABLE -- EFFLUENT LIMITATIONS

Tire and Inner Tube Industry

Effluent limitations commensurate with best available technology economically achievable and best practicable technology currently available are identical for the tire and inner tube subcategory.

Complete water reuse (zero discharge) for this industry does not appear feasible. Treatment of the waste water to approach influent water quality in a recycle system requires removal of oils, suspended solids, total dissolved solids and trace contaminants that cannot be justified on a technical, cost or benefit basis.

Synthetic Rubber Industry

Identification of Best Available Technology Economically Achievable

After review of the data and control and treatment technologies, it is clear the principal pollutant load after biological treatment, for all subcategories in the synthetic rubber industry, is due to COD. The other parameters (BOD, suspended solids, and oil and grease) are reduced to comparatively low levels. Therefore, advanced treatment should be addressed to COD removal and reduction.

None of the end-of-pipe systems observed in use by this industry was considered completely adequate for establishing effluent limitations commensurate with the best available technology economically achievable.

Emulsion Crumb Subcategory

After biological treatment, emulsion crumb waste waters have low BOD, suspended solids, and oil and grease concentrations, and high COD concentrations (up to 500 mg/L). The most feasible technique to reduce residual COD content after biological treatment is by using an activated carbon adsorption technique. This technology has been studied in pilot scale apparatus using as feed stock emulsion crumb waste waters which had been subjected to secondary treatment. After treatment with carbon, the resultant COD level was reduced to about 130 mg/L. Further studies by EPA, NERC, Cincinnati showed that reductions of COD levels up to 70 percent are technically and (potentially) economically achievable. This degree of removal has been used to establish COD effluent limitations and standards of performance for the emulsion crumb subcategory.

Figure 12 shows a hypothetical advanced waste water treatment facility using activated carbon treatment to achieve COD removals adequate for best available technology economically achievable.

The secondary effluent discharges into a holding tank which is normally maintained full by a level-control signal to the feed pumps. The feed pumps produce sufficient line pressure to pump the waste water through the dual multi-media filters and the carbon columns.

The waste water is first filtered to remove the residual suspended solids from the secondary treatment. Filtration before the carbon bed will prevent fine particles from plugging the carbon. The filtration media used generally are anthracite and fine graded sands. The filters are dual or multiple units depending on the waste water flow rate and standard equipment sizes available. Periodically, these filters require backwashing indicated by a pressure buildup upstream or a pressure drop across the filter bed. When filter backwashing is necessary, the feed is switched to the dual unit, the backwash pumps are activated, and the unit undergoes the complete backwash cycle. Backwash water containing trapped solids is piped to the aeration basins of the secondary treatment facility. The backwash cycle usually includes an air scour and a final service flow period for resettlement of the filter media. The flow rate during the backwash cycle is considerably higher than during the normal service cycle and therefore requires a holding tank of sufficient capacity to furnish the necessary water for the backwash operation.

The filtered waste water flows down through the activated carbon columns. Depending on the waste water flow rate, two or more parallel carbon bed columns may be required. Due to solids buildup in the carbon columns, periodic backwashing is also required. Each column is backwashed when the pressure drop across the column exceeds a pre-set value. The backwashing water is discharged to the aeration basins of the secondary treatment facility.

The carbon in the columns is replaced with fresh or regenerated carbon when its activity is depleted. This is indicated by breakthrough or leakage as detected in an automatic total carbon analyzer. The spent carbon is discharged to a spent carbon storage bin, and a regenerated or fresh charge of carbon is provided to the columns from a charge hopper.

The effluent from the carbon bed columns has low COD, BOD, suspended solids, and oil and grease. The flow of this effluent is monitored through a monitoring station where a 24 hour composite sample is collected.

In most emulsion crumb plants, the carbon usage is sufficiently high to justify on-site regeneration. Regeneration may be carried out in an oilfired, multiple-hearth furnace. The spent carbon is continuously fed from the spent carbon storage bin to the furnace. The regenerated and cooled carbon is then returned to a carbon charge hopper and is ready for recharging. Overflow carbon quench and slurry waters from the regeneration process are carbon (to replace carbon lost during unloading, transfer, loading, and regeneration) is added at the charge hopper. Losses normally amount to approximately 5 to 8 percent of the regenerated carbon weight.

In smaller emulsion crumb production facilities, carbon usage is low and on-site regeneration may not be feasible. The carbon can then either be returned to the supplier for regeneration or can be disposed of as solid waste in a landfill site.

Solution Crumb Subcategory

The hypothetical advanced waste water treatment facility illustrated in Figure 12 is also applicable to a secondary effluent from solution crumb waste water. The illustrated facility will produce an effluent satisfactory for best available technology economically achievable.

Although this technology has not been used by plants in the solution crumb subcategory, it has been studied for emulsion crumb secondary effluent. Because of the many similarities between solution crumb and emulsion crumb waste water (e.g., use of the same monomers and similar processing techniques by the two subcategories), it is reasonable to propose this advanced treatment technology for secondary solution crumb waste water. The level of treatment representative of this technology has been confirmed by the EPA National Environmental Research Center, Cincinnati, Ohio.

The advanced treatment facility for solution crumb is similar to that for emulsion crumb, except that in most cases the carbon will be disposed of or regenerated off-site, instead of being regenerated on-site. This is due primarily to the fact that solution crumb plants are generally smaller than emulsion crumb plants, and on-site carbon regeneration is not judged to be economically feasible at this level of cost analysis.

Latex Subcategory

Again, the hypotehtical advanced waste water treatment facility illustrated in Figure 12 is recommended for treatment of secondary effluent latex rubber waste waters. This facility corresponds to the proposed best available technology ecnomically achievable for latex rubber plants.

This technology has not been used by latex rubber plants, but it has been studied, for the advanced treatment of secondary effluent emulsion crumb rubber waste waters. There are many similarities in materials used and processing operations between latex and emulsion crumb production, and hence similarities in their waste waters. Differences tend to revolve around the level of loadings rather than the characteristics and constituents. It is, therefore, reasonable to recommend this advanced treatment technology for secondary effluent latex rubber waste waters. The level of treatment attainable by this technology has been confirmed by the EPA National Environmental Research Center, Cincinnati, Ohio. The hypothetical facility will be similar to that proposed for emulsion crumb waste waters.

Effluent Loading Attainable with Proposed Technologies

Emulsion Crumb Subcategory

Based on secondary treatment data and pilot studies of activated carbon adsorption, the proposed control and treatment technologies will result in effluent quality better than or equal to the following values:

COD	130 mg/L
BOD	5 mg/L
Suspended Solids	10 mg/L
Oil and Grease	5 mg/L
pH	6.0 to 9.0

The proposed treatment will probably produce an effluent of higher quality for BOD, Suspended Solids, and Oil and Grease than the above values. However, the resultant limitations on these parameters are governed by the accuracy of the analytical methods.

Effluent quality can also be defined in terms of effluent waste loads, The effluent waste loads, resulting from the application of treatment technologies equivalent to multi-media filtration and activated carbon adsorption, constitute the best available treatment economically achievable for the emulsion crumb subcategory. The proposed limitations are as follows:

COD	2.08 kg/kkg (lb/1000 lb) of product
BOD	0.08 kg/kkg (lb/1000 lb) of product
Suspended Solids	0.16 kg/kkg (lb/1000 lb) of product
Oil and Grease	0.08 kg/kkg (lb/1000 lb) of product
pH	6.0 to 9.0

Solution Crumb Subcategory

Industry secondary treatment data and data extrapolated from the pilot-scale activated carbon adsorption studies on secondary effluent emulsion crumb waste waters were used to quantify the effluent quality of solution crumb waste waters following advanced treatment. The effluent quality is given as follows:

COD	130 mg/L
BOD	5 mg/L
Suspended Solids	10 mg/L
Oil and Grease	5 mg/L
pH	6.0 to 9.0

The effluent values for BOD, Suspended Solids, and Oil and Grease are dictated by the lower limit of accuracy for the currently accepted analytical methods.

The effluent waste loads following multi-media filtration and activated carbon adsorption constitute the best available treatment economically achievable for the solution crumb subcategory. The proposed limitations are as follows:

COD	2.08 kg/kkg (lb/1000 lb) of product
BOD	0.08 kg/kkg (lb/1000 lb) of product
Suspended Solids	0.16 kg/kkg (lb/1000 lb) of product
Oil and Grease	0.08 kg/kkg (lb/1000 lb) of product
pH	6.0 to 9.0

Latex Subcategory

Latex industry secondary treatment data and data extrapolated from studies on the activated carbon adsorption treatment of emulsion crumb secondary effluent were used to formulate the following effluent qualities:

COD	130 mg/L
BOD	5 mg/L
Suspended Solids	10 mg/L
Oil and Grease	5 mg/L
pH	6.0 to 9.0

The effluent levels for BOD, Suspended Solids, and Oil and Grease are dependent on the accuracy of the best accepted analytical methods.

Effluent quality can also be expressed in terms of effluent waste loads which are independent of waste water flow. The effluent waste loads resulting from the application of treatment technologies equivalent to multimedia filtration and activated carbon adsorption form the basis for the best available treatment economically available for the latex subcategory. The proposed limitations are:

COD	1.78 kg/kkg (lb/1000 lb) of product
BOD	0.07 kg/kkg (lb/1000 lb) of product
Suspended Solids	0.14 kg/kkg (lb/1000 lb) of product
Oil and Grease	0.07 kg/kkg (lb/1000 lb) of product
pH	6.0 to 9.0

SECTION XI

NEW SOURCE PERFORMANCE STANDARDS

Tire and Inner Tube Industry

Recommended effluent limitations for new sources are identical and commensurate with best practicable technology currently available. These effluent limitations are presented in Section IX of this report.

Synthetic Rubber Industry

Because all stated subcategories of the synthetic rubber industry are highly technical and involve proprietary processes, in-plant control technologies cannot be fully defined or enumerated; such in-plant measures might impact on manufacturing practices and product quality.

Since advanced waste water treatment technologies have been proposed for the best available treatment economically achievable (BATEA) by existing plants by 1983, the recommended effluent limitations for new sources prior to 1983 are identical to those recommeded as best practicable control technology currently available for each of the synthetic rubber subcategories.

Pretreatment Recommendations

A minimum level of pretreatment must be given to new production facilities which will discharge waste water to a publicly owned treatment works. In addition, potential pollutants which will inhibit or upset the performance of publicly owned treatment works must be eliminated from such discharges.

Tire and Inner Tube Industry

Pretreatment recommendations for process waste waters from the tire and inner tube industry include the separation of oils and solids in an API gravity separator and the use of an equalization basin to prevent shock loads of oil, suspended solids or batch dumps of dipping solutions from entering and upsetting the performance of a publically owned treatment works. Oily wastes, after dilution in a public sewer system, will remain untreated and therefore must be controlled before discharge from the plant boundaries.

Pretreatment of other nonprocess waste waters from the tire and inner tube industry will pose more difficult problems. These include alkalinity in boiler blowdowns and both acidity and alkalinity in water treatment wastes. Both boiler blowdowns and water treatment wastes will contain high concentrations of suspended and dissolved solids. Cooling tower water treatment wastes may contain heavy metals such as chromium and zinc used for corrosion inhibition. Potential problems such as acidity, alkalinity, solids, oils, and heavy metals may require control at the plant to conform to local ordinances for discharge to a publicly

owned treatment works. The control techniques and treatment methods are described in earlier sections of this report. Equalization of the waste load and waste water flow is the key step in the control of batch dumps of production chemicals and solutions.

Synthetic Rubber Industry

Emulsion crumb and solution crumb slurry overflow waste waters should be passed through crumb pits to remove floatable rubber crumb. Few publicly owned treatment works have primary clarification equipment adequate to handle large quantities of agglomerated rubber crumb solids.

Wastewaters from emulsion crumb and latex production facilities are invariably laden with uncoagulated latex solids. Since publicly owned treatment works do not generally have coagulation capabilities, these waste waters should, at least, be chemically coagulated with a sinking agent and clarified.

Utility wastes often exhibit extreme pH peaks which should be neutralized or, at least equalized, prior to discharge to the publicly owned treatment works. This problem is not so severe with emulsion crumb and latex plants, where pH adjustment is required prior to chemical coagulation, as it is with solution crumb production facilities where adjustment of the waste water pH is normally not necessary. Heavy metals, present in cooling tower blowdowns for example, should be eliminated by substitution of inhibitor or equalized prior to discharge to a publicly owned treatment works.

No compounds or species present in synthetic rubber process waste water can be considered toxic or inhibitory to the performance of publicly owned treatment works.

In summary, the following pretreatment requirements apply to waste water discharges to publicly owned treatment works from synthetic rubber plants:

Emulsion Crumb Subcategory - Gravity separation of crumb fines in crumb pits, chemical coagulation and clarification of latex-laden waste waters, and neutralization or equalization of utility wastes.

Solution Crumb Subcategory - Gravity separation of crumb fines in crumb pits, and neutralization or equalization of utility wastes.

Latex Subcategory - Chemical coagulation of latex-laden waste waters, and neutralization or equalization of utility wastes.

SECTION XII

ACKNOWLEDGEMENTS

The original draft of this document was prepared by Roy F. Weston, Inc., West Chester, Pennsylvania, under the direction of Mr. Melvin J. Sotnick, Manager Chemical Engineering Services. He was assisted by David C. Day, PhD, Principal Engineer, Mr. Robert A. Morris, Chemical Engineer and other members of the staff.

The Environmental Protection Agency wishes to acknowledge the cooperation of the officers and plant personnel in the rubber industry who provided valuable assistance in the collection of data relating to process raw waste load and treatment plant performance at various tire, inner tube and synthetic rubber facilities. Special acknowledgement is made of Mr. Daniel G. Pennington of the Rubber Manufacturers Association for coorindating the schedule of visits among the industry members.

Acknowledgement is made of the assistance provided in supplying the manifold copies of RAPP applications by the EPA Regional Administrators as well as the physical assistance of the Regional Industry Coordinator's staff personnel during the field sampling and analysis portions of the project. In addition acknowlegement is made to Messrs. John Convery, Jesse Cohen and Richard Dobbs and Robert Smith of the EPA National Environmental Research Center, Cincinnati Ohio for the special studies on the activated carbon treatment of synthetic rubber production waste waters.

Special mention and acknowledgement is made of the following EPA rubber industry working group members who assisted in field sampling, project evaluation and review of the draft and final documents: George R. Webster, Chairman and C. R. McSwiney, Legal Assistant, Effluent Guidelines Division; Herbert S.Skovronek, PhD, Edison Water Quality Research Laboratory Division of NERC, Cincinnati; Paul Ambrose, Enforcement Division, EPA Region III; John Lank, Enforcement Division, EPA Region IV; Charles H. Ris and Marshall Dick, Office of Research and Development, Headquarters; Richard Insinger, Planning and Evaluation, Economic Analysis Branch, Headquarters; Doris Ruopp, Office of Toxic Materials, Headquarters; Alan W. Eckert, Office of General Counsel; and John E. Riley, Project Officer, Rubber Industry, Effluent Guidelines Division. Acknowledgement is made of the efforts of Jane D. Mitchell, Effluent Guidelines Division for typing the final manuscript. Acknowledgement is made of the overall guidance and direction provided by Mr. Allen Cywin, Director, Effluent Guidelines Division and Mr. Ernst P. Hall, Deputy Director and others within the Agency who provided many helpful suggestions and comments.

SECTION XIII

REFERENCES

1. Shreve, R.N., Chemical Process Industries, CPI; McGraw Hill, Inc., New York, (1967).

2. Standen, A., ed., Kirk-Othmer, Encyclopedia of Chemical Technology; Vol. 17, John Wiley and Sons, New York, (1968).

3. Kestein, B., "SBR and Polybutadiene Rubbers," Symposium on Tire Material Decisions, AICHE 74th National Meeting, Minneapolis, Minnesota, (August 29, 1972).

4. "Rubber Industry Facts", Rubber Manufacturers Association, New York, 1972.

5. Private Communications from Chem Systems, Inc., New York.

6. "Air Flotation-Biological Oxidation of Synthetic Rubber and Latex Wastewater", Firestone Synthetic Rubber and Latex Company, Lake Charles, Louisiana (October 15, 1972).

7. "Industrial Wastewater Reclamation with 400,000-gallon-per-day Vertical Tube Evaporator, Design, Construction and Initial Operation", The General Tire and Rubber Company, Akron, Ohio (September, 1972).

8. Unpublished internal EPA report to George R. Webster, Effluent Guidelines Division, from J. M Cohen, Chief, Physical Chemical Treatment Research NERC Cincinnati entitled "Feasibility of Treating Synthetic Rubber Waste Water by Granular Activated Carbon, August 24, 1973.

GENERAL BIBLIOGRAPHY

Rostenbach, R.E., "Status Report on Synthetic Rubber Wastes." Sewage and Industrial Waste, Vol. 24; No. 9, (September 1952), 1138-1143.

Placek, O.R. and Ruchhoft, C.C., "A Study of Wastes from the Synthetic Rubber Industry." Sewage and Industrial Waste, Vol. 18, No. 6, (November 1946), 1160-1181.

Martin, A.E. and Rostenbach, R.E., "Industrial Waste Treatment and Disposal." Industrial and Engineering Chemistry, Vol. 45, No. 12, (December 1953), 2680-2685.

"Putting the Closed Loop into Practice." Environmental Science and Technology, Vol. 6, No. 13, (December 1972), 1072-1073.

Dougan, L.D. and Bell, J.C., "Waste Disposal at a Synthetic Rubber Plant." Sewage and Industrial Wastes, Vol. 23, No. 2, (February 1951), 181-187.

"A Study of Pollution Control Practices in Manufacturing Industries." Marketing Services Division, Research Services Department, Dun and Bradstreet, Inc., (June 1971).

Hebbard, G.M., Powell, S.T. and Rostenbach, R.E., "Rubber Industry." Industrial and Engineering Chemistry, Vol. 39, No. 5, (May 1947), 589-595.

Nemerow, N.L., Theories and Practices of Industrial Waste Treatment, Addison-Wesley Publishing Co., New York, (1963).

Alliger, G. and Weissert, F.C., "Elastomers." Industrial and Engineering Chemistry, Vol. 59, No. 8, (August 1967), 80-90.

Herzlich, H.J., "Tire Compounding." Chemical Engineering Progress, Vol. 69, No. 2, (February 1973), 77-78.

Montgomery, D.R., "Integrated System for Plant Wastes Combats Stream Pollution." Chemical Engineering, Vol. 63, No. 4, (February 1967), 108-110.

Ruebensaal, C.F., "The Rubber Industry Statistical Report and Changing Markets and Manufacturing Patterns in the Synthetic Rubber Industry." International Institute of Synthetic Rubber Producers, Inc., New York, (1972).

Anderson, E.V., "Rubber, A $16 Billion Industry Turns on Tires." Chemical and Engineering News, (July 14, 1969), 39-83.

Hofmann, W., Vulcanization and Vulcanizing Agents; Palmerton Publishing Co., Inc., New York, (1967).

Hawley, G.G., The Condensed Chemical Dictionary; Reinhold Co., New York, (1971).

Fawcett, R.J. and McDone, E.T., "Special Rubbers in Tires." Symposium on Tire Material Decisions, AICHE 73rd National Meeting, Minneapolis, Minnesota, (August 29, 1972).

Lund, H.F., ed., Industrial Pollution Control Handbook; McGraw-Hill, Inc., New York, (1971).

"Methods for Chemical Analysis of Water and Wastes." Environmental Protection Agency, National Environmental Research Center, Analytical Quality Control Laboratory, Cincinnati, Ohio, (1971).

Taras, M.J., ed., Standard Methods for the Examination of Water and Wastewater. American Public Health Association, Washington, D.C., (1971).

Water; Atmospheric Analysis, Part 23, "Standard Method of Test for Biochemical Oxygen Demand of Industrial Water and Industrial Wastewater." 1970 Annual Book of ASTM Standards, American Society of Testing and

Materials, Philadelphia, Pennsylvania, (1970).

Eckenfelder, W.W., Industrial Water Pollution Control; McGraw-Hill, Inc., New York, (1966).

Perry, J.H., ed., Chemical Engineers' Handbook, 4th Ed.; McGraw-Hill, Inc., New York, (1963).

SECTION XIV

GLOSSARY

Act

The Federal Water Pollution Control Act Amendments of 1972.

Activator

A metallic oxide that makes possible the crosslinking of sulfur in rubber vulcanization.

Antioxidant

An organic compound added to rubber to retard oxidation or deterioration.

Accelerator Agents

A compound which greatly reduces the time required for vulcanization of synthetic or natural rubber.

Banbury Mixer

Trade name for a common internal mixer manufactured by Farrel Corporation used in the compounding and mixing of tire rubber stock.

Best Available Technology Economically Achievable (BATEA)

Treatment required by July 1, 1983 for industrial discharges to surface waters as defined by Section 301 (b) (2) (A) of the Act.

Best Practicable Control Technology Currently Available (BPCTCA)

Treatment required by July 1, 1977 for industrial discharges to surface waters as defined by Section 301 (b) (1) (A) of the Act.

Best Available Demonstrated Control Technology (BADCT)

Treatment required for new sources as defined by Section 306 of the Act.

BOD5

Biochemical Oxygen Demand (5 day).

Bag House

An air emission control device used to collect intermediate and large particles (greater than 29 microns) in a bag filter. A bag filter constructed of fabric. Common usage in the tire industry is to control

and recover carbon black in a dry state from vapors leaving the compounding area.

Butyl Rubber

A synthetic rubber made by the solution polymerization of isobutylene and isoprene.

Camelback

Tire tread used in the retreading of tire carcasses.

Capital Costs

Financial charges in August 1971 dollars which are computed as the cost of capital times the capital expenditures for pollution control. Cost of capital is assumed to be 10 percent.

Carbon Black

A reinforcing agent used in large quantities in tire rubber compounds.

Catalyst

A substance that initiates a chemical reaction and enables it to proceed at a greatly accelerated rate.

Category and Subcategory

Divisions of a particular industry which possess different traits which affect water quality and treatability.

Cement

A process stream consisting of polymeric rubber solids dissolved in solvent.

Cement (Tire and Tube)

An adhesive used in tire and inner tube manufacturing.

Coagulation

The combination or aggregation of previously emulsified particles into a clot or mass.

COD

Chemical Oxygen Demand.

Crumb

Small coagulated particles of synthetic rubber.

Curing Agent

Curing or vulcanization agents are substances which bring about the rubber crosslinking process. The most important agent is sulfur. See vulcanization.

Depreciation

Accounting charges reflecting the deterioration of a capital asset over its useful life. Reported as straight line over five years with zero salvage value.

Dry Air Pollution Control

The technique of air pollution abatement without the use of water.

Emulsion

A stable mixture of two or more immersible liquids held in suspension by small percentage of substances called emulsifiers.

Endogenous Respiration

Auto-oxidation of the microorganisms producing a reduction and stabilization of biological solids.

EPDM

A synthetic rubber based on ethylene-propylene and a controlled amount of non-conjugated diene. Polymerization is carried out in solution.

Extender

A low specific gravity substance used in rubber formulations chiefly to reduce costs.

Extrude

To shape by forcing a material through a die. The operation is carried out in a device known as an extruder. In tire and inner tube manufacture treads and inner tubes are formed by extrusion.

Filler

A high specific gravity (2.00-4.50) compound used in rubber mixtures to provide a certain degree of stiffness and hardness and used to decrease costs. Fillers have neither reinforcing or coloring properties and are similar to extenders in their cost-reducing function.

gpm

Gallons per minute.

IR

Polyisoprene rubber, the major component of natural rubber, amde synthetically by the solution polymerization of isoprene.

Investment Costs

The capital expendistures reported in August 1971 dollars required to bring the treatment or control technology into operation. Included are expenditures for design, site preparation, purchase of materials, construction and installation. Not included is the purchase of land on which the system is to be built.

L

Liter

Latex

A suspension of rubber particles in a water solution. Coagulation of the rubber is prevented by protective colloids. A colloid is a surface active substance that prevents a dispersed phase of a suspension from coalescing by forming a thin layer on the surface of each particle.

Masterbatch

A compounded rubber stock applicable to a wide variety of uses. Main ingredients are rubber, carbon black and extender oil.

mg/L

Milligrams per liter. Nearly equivalent to parts per million concentration.

Modifier

An additive which adjusts the chain length and molecular weight distribution of the rubber during polymerization.

Monomer

A compound of a relatively low molecular weight which is capable of conversion to polymers or othe/ compounds.

NBR

Nitrile rubber, a synthetic rubber made by emulsion polymerization of acrylonitrile with butadiene.

New Source

Any building, structure, facility, or installation from which there is or may be a discharge of pollutants and whose construction is commenced after the publication of the proposed regulations.

Non-Productive Rubber Stock

Rubber stock which has been compounded but which contains no curing agents. Synonym for non-reactive rubber stock.

Non-Reactive Rubber Stock

Rubber stock which has been compounded but which contains no curing agents. Synonym for non-productive rubber stock.

Operations and Maintenance

Costs required to operate and maintain pollution abatement equipment. They include labor, material, insurance, taxes, solid waste disposal, etc.

PBR

Polybutadiene rubber, a synthetic rubber made by solution polymerization of butadiene.

pH

A measure of the relative acidity or alkalinity of water. A pH of 7.0 indicates a neutral condition. A greater pH indicates alkalinity and a lower pH indicates acidity. A one unit change in pH indicates a 10 fold change in acidity and alkalinity.

Pigment

Any substance that imparts color to the rubber. Pigment substances such as zinc oxide or carbon black also act as reinforcing agents.

Plastic

Capable of being shaped or molded with or without the application of heat.

Process Water

All waters that come into direct contact with the raw materials, intermediate products.

Productive Rubber Stock

Compounded rubber which contains curing agents and which can be vulcanized. Synonym for reactive rubber stock.

Reactive Rubber Stock

Compounded rubber which contains curing agents and which can be vulcanized. Synonym for productive rubber stock.

Reinforcers or Reinforcing Agent

Fine powders used to increase the strength, hardness and abrasion resistance of rubber. Reinforcing agents used in the rubber processing include carbon balc, zinc oxide and hydrated silicas.

SBR

Styrene Butadiene Rubber, a synthetic rubber made either by emulsion or solution polymerization of styrene and butadiene.

Soapstone

A substance used to prevent tire and inner tube rubber stocks from sticking together during periods of storage. Used in both a dry and solution form. The major ingredient is usually clay.

Solution

A uniformly dispersed mixture of the molecular level of one or more substances in one or more other substances.

Stripper

A device in which relatively volatile components are removed from a mixture by distillation or by passage of steam through the mixture.

Surface Waters

Navigable waters. The waters of the United States including the territorial seas.

Tire Bead

Tire beads are coated wires inserted in the pneumatic tire at the point where the tire meets the steel rim on which it is mounted. They insure an air tight seal between the tire and rim.

Tire Cord

Woven synthetic or natural fabrics impregnated with rubber. They form the body of the tire and supply it with most of its strength.

Tire Tread

Tire tread is riding surface of the tire. Their design and composition are dependent on the end use of the tire.

Tread Book

A set of movable shelves designed for the temporary storage of extruded tread sections between the extrusion and tire building operations. Each shelf pivots like the page of a book, thus the name tread book.

Vulcanization

Vulcanization is the process by which plastic rubber is converted into the elastic rubber or hard rubber state. The process is brought about by linking of macro-molecules at their reactive sites.

Wet Air Pollution Control

The technique of air pollution abatement utilizing water as an absorptive media.

SECTION XV
METRIC UNIT
CONVERSION TABLE 44

MULTIPLY (ENGLISH UNITS)		by	TO OBTAIN (METRIC UNITS)	
ENGLISH UNIT	ABBREVIATION	CONVERSION	ABBREVIATION	METRIC UNIT
acre	ac	0.405	ha	hectares
acre - feet	ac ft	1233.5	cu m	cubic meters
British Thermal Unit	BTU	0.252	kg cal	kilogram-calories
British Thermal Unit/pound	BTU/lb	0.555	kg cal/kg	kilogram calories/ kilogram
cubic feet/minute	cfm	0.028	cu m/min	cubic meters/minute
cubic feet/second	cfs	1.7	cu m/min	cubic meters/minute
cubic feet	cu ft	0.028	cu m	cubic meters
cubic feet	cu ft	28.32	l	liters
cubic inches	cu in	16.39	cu cm	cubic centimeters
degree Fahrenheit	°F	0.555 (°F-32)*	°C	degree Centigrade
feet	ft	0.3048	m	meters
gallon	gal	3.785	l	liters
gallon/minute	gpm	0.0631	l/sec	liters/second
horsepower	hp	0.7457	kw	kilowatts
inches	in	2.54	cm	centimeters
inches of mercury	in Hg	0.03342	atm	atmospheres
pounds	lb	0.454	kg	kilograms
million gallons/day	mgd	3,785	cu m/day	cubic meters/day
mile	mi	1.609	km	kilometer
pound/square inch (gauge)	psig	(0.06805 psig +1)*	atm	atmospheres (absolute)
square feet	sq ft	0.0929	sq m	square meters
square inches	sq in	6.452	sq cm	square centimeters
tons (short)	ton	0.907	kkg	metric tons (1000 kilograms)
yard	yd	0.9144	m	meters

*Actual conversion, not a multiplier

*U.S. GOVERNMENT PRINTING OFFICE:1993 -715-003/87024