EPA 440/1-78/090

GUIDANCE
DEVELOPMENT DOCUEMENT
EFFLUENT LIMITATIONS GUIDELINES &
NEW SOURCE PERFORMANCE STANDARDS FOR

CONCRETE PRODUCTS
POINT SOURCE CATEGORY

UNITED STATES ENVIRONMENTAL PROTECTION AGENCY

FEBRUARY 1978

GUIDANCE

DEVELOPMENT DOCUMENT

for

EFFLUENT LIMITATIONS GUIDELINES

and

NEW SOURCE PERFORMANCE STANDARDS

for the

CONCRETE PRODUCTS POINT SOURCE CATEGORY

Douglas M. Costle
Adminstrator

Thomas C. Jorling
Assistant Administrator for Water
and Hazardous Materials

Robert B. Schaffer
Director
Effluent Guidelines Division

Richard J. Kinch
and
James R. Berlow
Project Officers

February, 1978

Effluent Guidelines Division
Office of Water and Hazardous Materials
U. S. Environmental Protection Agency
Washington, D.C. 20460

ABSTRACT

This document presents the findings of a study of the concrete products industry for the purpose of providing guidance in determining best practicable control technology currently available, best available demonstrated control technology and best available technology economically achievable.

Effluent guidelines contained herein set forth the degree of effluent reduction attainable through the application of the technologies available to this industry.

Supporting data will serve as guidance in determining permit requirements issued under the National Pollutant Discharge Elimination System.

CONTENTS

Section		Page
	Abstract	
I	Conclusions	1
II	Industry Characterization	11
III	Industry Categorization	27
IV	Water Use and Waste Characterization	29
V	Selection of Pollutant Parameters	59
VI	Control and Treatment Technology	65
VII	Cost Energy and Non-Water Quality Aspects	111
VIII	Acknowledgements	147
IX	References	149
X	Glossary	151

LIST OF FIGURES

Figure		Page
1	Production of Concrete Block and Brick (Low Pressure Steam Curing)	32
2	Production of Concrete Block and Brick (Autoclave Curing)	35
3	Production of Culvert, Storm Sewer and Sanitary Sewer Concrete Pipe	39
4	Production of Concrete Pressure Pipe	40
5	Distribution of Nonconsumptive Water Use at Concrete Pipe Plants	43
6	Production of Precast and Prestressed Concrete Products	45
7	Production of Ready-Mixed Concrete in Permanent or Portable Plants	51
8	Production of Ready-Mixed Concrete at Mobile Plants	56
9	Belt Oil Skimmer	74
10	API-Type Oil Skimmer	75
11	Distribution of Waste Water Generated at Precast and Prestressed Concrete Products Plants	76
12	Distribution of Waste Water Generated at Permanent Ready-Mixed Concrete Plants	80
13	Distribution of Process Waste Water Generated and Discharged at Ready-Mixed Concrete Plants	81
14	Distribution of Waste Water Generated at Portable Ready-Mixed Concrete Plants	85
15	Settling Rates For Concrete Fines in Truck Washout	93
16	Series Settling Ponds	96

		Page
17	Series Concrete Basins With Straw Filters	97
18	Filter Pond	98
19	Sloped Slab Separation Basin	100
20	Drag Chain Washer	101
21	Screw Washer	103
22	Double Screw Washer	104
23	Mechanical Screen Separator	106
24	Screw Washer and Screen for Aggregate Separation	107
25	Distribution of Loads of Ready-Mixed Concrete Per Day Per Truck	129
26	Annual Operating Costs For Waste Water Treatment at Ready-Mixed Concrete Plants	130
27	Amount of Acid Required For Neutralization of Concrete Waste Water	137

LIST OF TABLES

Table		Page
1	Summary of Treatment Technologies and Effluent Data of the Concrete Products Industry	4,5,6,7
2	Summary of Treatment Technologies and Effluent Data from Operations in the Concrete Products Industries With Some Exemplary Features	89
3	Summary of Data Base	12
4	Location of U.S. Concrete Operators	20
5	Production of Concrete Products	25
6	Industry Categorization	27
7	Total Waste Water Generated By Concrete Pipe Plants	72
8	Total Waste Water Generated By Prestressed and Precast Concrete Plants	78
9	Summary of Treatment of Central Mixer and Truck Washout Water in Ready-Mixed Concrete Plants	89
10	Summary of Treatment of Truck Wash-off Water in Ready-Mixed Concrete Plants	90
11	Waste Water Treatment Technology from Portable Ready-Mixed Concrete Plants	91
12	Concrete Block and Brick (High Pressure Autoclave Curing) Treatment Costs	115
13	Concrete Block and Brick (Low Pressure Steam Curing) Treatment Costs	117
14	Concrete Pipe Treatment Costs (1)	120
15	Concrete Pipe Treatment Costs (2)	121
16	Precast and Prestressed Products	123

		Page
	Treatment Costs	
17	Permanent Ready-Mixed Concrete (1) Treatment Costs	126
18	Permanent Ready-Mixed Concrete (2) Treatment Costs	127
19	Value of Recovered Aggregate and Disposal Cost of Cement Sludge	134
20	Portable Ready-Mixed Concrete Treatment Costs	146
21	Metric Units Conversion Table	157

SECTION I

CONCLUSIONS

Concrete Block and Brick (Autoclave and Low Pressure Steam Curing) Production Plants

Data were obtained from plants with ages ranging from 2 to 35 years and productions ranging from 26,600 to 250,000 kkg per year (29,300 to 275,000 tons per year). The general process employed in these plants includes weighing, batching and mixing of raw materials, forming, conditioning, curing (using autoclaves or low pressure steam) and storage of concrete block and brick.

The manufacturing process used for autoclave curing and low pressure steam curing are similar. The raw wastes from autoclave plants are approximately an order of magnitude greater than that from low pressure curing plants. In fact, only one low pressure steam curing plant (7109) was found to have any treatment. Most operators of low pressure steam curing block plants indicated that the amount of waste water generated is insignificant and basically does not warrant the installation of specific treatment systems. Of the seven low pressure steam curing plants visited by EPA, none were discharging at the time of the visit. Therefore, no waste water discharge is a regulatory option which might be considered for the low pressure steam curing portion of block and brick plants.

Based upon the information obtained in this study, three concrete block and brick plants are presently using sedimentation as a treatment for suspended solids; at least one plant is presently practicing pH control (Table 1). From an engineering standpoint, the use of sedimentation and pH control for waste water treatment is considered to be practicable for concrete block and brick plants. This would require the installation of settling ponds or clarification equipment, pH control equipment and necessary piping and pumps.

The average level of total suspended solids achieved by two autoclave plants (7100 and 7105) with settling treatment technology installed and available effluent data is 0.0065 kg/kkg of product (Table 2). Similar treatment technology and effluent levels are expected to be attainable for steam curing plants which need to discharge because of local conditions.

Concrete Pipe

Data were obtained from plants with ages ranging from 2 to 40 years and productions ranging from 4,540 to 175,000 kkg per year (5,000 to 193,000 tons per year).

The general process employed includes weighing, batching and mixing of raw material and casting and curing of concrete pipe. In addition, prestressing, prewetting, coating, and testing are used for concrete pressure pipe.

One of the largest plants, 7247, is currently treating the waste water by settling for reduction of suspended solids, skimming for oil and grease removal, and adjusting pH. The average performance achieved by this plant is 0.0095 kg/kkg of TSS, 0.0035 kg/kkg of oil and grease and pH of 7.4 in the plant effluent (Table 2).

Prestressed and Precast Concrete Products

Data were obtained from plants with ages ranging from 3 to 50 years and productions ranging from 1,360 to 227,000 kkg per year (1,500 to 250,000 tons per year).

The general process employed includes mixing cement, aggregate and water, placing steel reinforcing rods or tendons in a form, pouring concrete into the form and curing and finishing of the precast/prestressed products.

Settling is widely used for suspended solids treatment; pH adjustment is performed at one plant, 7238. Although oil and grease may present a problem, no plants visited by EPA practiced oil and grease removal. From an engineering standpoint, however, this subcategory could employ the following treatment technologies: settling of suspended solids in ponds or mechanical clarification, pH adjustment and oil and grease removal where required. Oil and grease removal is based on a transfer of technology from plant 7247, another plant in this category.

The average performance of the plants with treatment is TSS 0.018 kg/kkg; oil and grease, 0.0014 kg/kkg; and a pH range of 7.5 to 9.8 (see Table 2). Plant 7234 which achieves zero discharge was not included in the average.

Ready-Mixed Concrete, Permanent and Portable Production Plants

Data were obtained from plants with ages ranging from 1 to 43 years and productions ranging from 1,530 to 230,000 cubic meters per year (2,000 to 300,000 cubic yards per year).

The general process employed includes weighing, batching and mixing of cement, aggregates and water and delivery of ready-mixed concrete.

Treating raw wastes by ponding is currently used by approximately 94 percent of the plants contacted; most of these ponds (60%) are evaporation/percolation systems. The recycle of truck washout water is used by 38 percent of the plants; pH adjustment is currently used by approximately 2 percent of the plants contacted. Treatment of yard runoff is practiced by less than 1 percent of the industry. Settling of suspended solids in ponds, sloped slab basins or mechanical clarifiers, recycle of clarified water for truck washout and pH adjustment prior to discharge is thus considered to be practicable for these subcategories. Current A.S.T.M. standards prevent the use of recycled washout water as mix water. Without a change in A.S.T.M. standards the ability of many plants to recycle washout water will be limited.

To implement this technology at plants not already using these control techniques would require the installation of settling ponds, sloped slab basins or mechanical clarification equipment, pumps and piping for recycle of washout water and pH control equipment. Some plants may require oil and grease removal equipment (skimmers). In addition, it is possible for yard runoff to be contaminated unless truck and mixer washoff and washout is adequately captured and the pH is neutralized. Runoff from batching operations and cement loading and unloading areas may also be similarily contaminated.

Fourteen permanent plants and eight portable plants achieve zero discharge. Eight permanent plants discharged waste water. The average performance of the plants with waste water discharge is TSS, 0.0013 kg/m^3; oil and grease, 0.000084 kg/m^3; and pH range from 5.7 to 11.8 (see Table 2).

TABLE 1

SUMMARY OF TREATMENT TECHNOLOGIES AND EFFLUENT DATA OF THE CONCRETE PRODUCTS INDUSTRY

Subcategory	Plant No.	Effluent Hydraulic Load l/kkg (gal/ton)	TSS kg/kkg (lb/1,000 lb); mg/l	Oil & Grease kg/kkg (lb/1,000 lb); mg/l	pH	Treatment Technology	Data Source Source	Date	Amount	Sample
Concrete Block and Brick, Steam Curing	7109	8.9 (2.1)	0.005; 64	none	11.1	None at the time of sampling	Plant supplied	1/10/72	one day	d
	7111	142 (34.0)	0.0014;10	0.005;35	9.8	none	NPDES App.	1971	*	*
	7112	43 (10.3)	0.0002; 5	*	11.1	*	NPDES App.	1971	one day	*
	The following plants do not discharge: 7102, 7103, 7104, 7106, 7108, 7110									
Concrete Block and Brick, Autoclave	7100	50 (12)	0.001; 20	*	11.3	Settling	EPA	7/9/75	one day	d
	7105	214 (51)	0.01; 54	*	11.3	Settling	EPA	7/15/75	one day	d
	The following plant does not discharge: 7107									
Concrete Pipe	7201	28 (6.7)	0.002; 70	0.01; 376	11.5	Settling	EPA	6/30/75	one day	d
	7224	161 (39)	0.13; 837	0.04; 264	9.0	Settling & water reuse	EPA	7/17/75	one day	d
		1,070 (256)	0.35; 327	*	11.0	Settling	NPDES App.	1971	*	*
	7247	1,000 (240)	0.006; 6	0.003; 2.9	7.4	Settling, oil skimming, and pH adjustment	EPA	7/22/75	one day	d
		743 (178)	0.013; 17	0.004; 5.5	7.5		Plant supplied	1/75-3/75	three days	d
	7249	1,202 (288)	0.12; 100	0.03; 26	9.5	*	NPDES App.	1971	*	*
	7250	235 (56)	0.002; 8	0.003; 11	8.0	*	NPDES App.	1971	*	*
	7251	278 (67)	0.009; 32	0.017; 64	9.6	*	NPDES App.	1971	*	*
	7252	329 (79)	0.03; 92	0.004; 11	8.8	*	NPDES App.	1971	*	*

* Unknown
a No discharge from the plant
b Yard runoff data
c Treatment equipment sized to handle yard runoff
d Composite sample
e Grab sample
f Manufactures both concrete block and pipe
g Oil and grease due to mosquito control

TABLE 1

SUMMARY OF TREATMENT TECHNOLOGIES AND EFFLUENT DATA OF THE CONCRETE PRODUCTS INDUSTRY (Continued)

Subcategory	Plant No.	Effluent Hydraulic Load l/kkg (gal/ton)	TSS kg/kkg (lb/1,000 lb); mg/l	Oil & Grease kg/kkg (lb/1,000 lb); mg/l	pH	Treatment Technology	Data Source: Source	Data Source: Date	Data Source: Amount	Data Source: Sample
Precast & Prestressed Concrete Products	7203	24 (5.8)	0.002; 97	0.00002; 0.8	11.5	Settling	EPA	6/20/75	one day	d
	7207	87 (21)	0.02; 230	0.0004; 4	11.4	Settling	EPA	7/15/75	one day	d
	7230	139 (33)	0.07; 488	0.0002; 1.4	10.9	Settling	EPA	7/15/75	one day	d
	7232	8.7 (2.1)	0.003; 353	8 x 10-7; 0.1	11.7	Settling	EPA	7/3/75	one day	d
	7238	201 (48)	0.002; 12	0.013; 64[g]	9.8	Settling, mechanical clarification & pH adjustment	EPA	7/26/75	one day	d
		149 (36)	0.013; 88	*	7.5		Plant supplied	6/74	one day	d
	7253	371 (89)	0.098; 264	0.015; 41	9.1	*	NPDES App.	1971	*	*
	The following plant does not discharge. Data presented are samples taken from the last settling pond.									
	7234	none	5 mg/l	2.2 mg/l	9.1	Settling	EPA	7/16/75	one day	e
		l/m^3 (gal/yd)	kg/m^3 (lb/yd^3); mg/l	kg/m^3 (lb/yd^3); mg/l						
Permanent Ready-Mix Concrete	7305	40 (8)	0.005 (0.008); 125	0.00008 (0.00013); 2	12.1	Settling	Plant supplied	12/11/74	one day	*
	7365	20 (4)	0.002 (0.003); 89	*	11.8	Settling	EPA	6/19/75	one day	d
	7385	50 (10)[b]	0.022 (0.037); 433	0.0002 (0.0003); 3.5	11.2	Settling[c]	EPA	4/23/75	one day	e
	7542	248 (50)	0.001 (0.0017); 4	0.00008 (0.00013); 0.3	5.7	Mechanical clarification, pH adjustment & water reuse[c]	EPA	6/5/75	one day	d
	7543[a]	25 (5)[b]	0.0001 (0.00017); 4	0.00002 (0.00003); 0.88	10.1	Mechanical clarification & water reuse[c]	EPA	6/5/75	one day	e
	7544[a]	20 (4)[b]	0.0008 (0.0012); 38	0.00002 (0.00003); 1.2	12.5	Settling, mechanical clarification & water reuse[c]	EPA	6/13/75	one day	e
	7545	163 (33)	0.0015 (0.0025); 9	0.00005 (0.00009); 0.3	6.5	Settling, mechanical clarification, pH adjustment & water reuse[c]	EPA	6/13/75	one day	d
		129 (26)[b]	0.008 (0.013); 6.1	0.00005 (0.00008); 0.4	10.8		EPA	6/13/75	one day	e

TABLE 1

SUMMARY OF TREATMENT TECHNOLOGIES AND EFFLUENT DATA OF THE CONCRETE PRODUCTS INDUSTRY (Continued)

Subcategory	Plant No.	Effluent Hydraulic Load l/m^3 (gal/yd^3)	TSS kg/m^3 (lb/yd^3); mg/l	Oil & Grease kg/m^3 (lb/yd^3); mg/l	pH	Treatment Technology	Data Source: Source	Data Source: Date	Data Source: Amount	Sample
Permanent Ready-Mix Concrete (continued)	7731	69 (14)	0.001 (0.002); 15	0.00012 (0.00020); 1.8	11.5	Sloped slab[c]	EPA	7/17/75	one day	d
	The following plants were not discharging during sampling. Data presented are samples taken from the final containment pond or the recycle water holding tank at each plant.									
	7363	none	6.0 mg/l	0.5 mg/l	9.7	Mechanical clarification, settling and water reuse	EPA	6/23/75	one day	e
	7385	none	50 mg/l	*	12.1	Settling, mechanical clarification & water reuse	EPA	7/2/75	one day	e
	7441	none	208 mg/l	0.2 mg/l	12.5	Filter pond	EPA	7/2/75	one day	e
	7451	none	39 mg/l	0.7 mg/l	12.0	Filter pond & water reuse	EPA	7/1/75	one day	e
	7487	none	29 mg/l	0.2 mg/l	11.7	Settling and water reuse	EPA	6/2/75	one day	e
	7543	none	109 mg/l	*	11.7	Mechanical clarification	EPA	6/5/75	one day	e
	7544	none	23 mg/l	0.4 mg/l	10.3	Mechanical clarification	EPA	6/13/75	one day	e
	7699	none	22 mg/l	none	11.6	Settling and water reuse	EPA	6/10/75	one day	e
	7732	none	1,864 mg/l	1.4 mg/l	11.8	Mechanical clarification & water reuse	EPA	7/17/75	one day	e
	7750	none	7.0 mg/l	1.4 mg/l	10.3	Settling and water reuse	EPA	7/16/75	one day	e

The following plants do not discharge: 7452, 7729, 7736
Plant 7757 discharges yard runoff only

TABLE 1

SUMMARY OF TREATMENT TECHNOLOGIES AND EFFLUENT DATA OF THE CONCRETE PRODUCTS INDUSTRY (Continued)

Portable Ready-Mix Concrete	No effluent data available The following plants do not discharge: 7602, 7603, 7604, 7609, 7633, 7649, 7706, 7751
Mobile Ready-Mix Concrete	No effluent data available The following plant does not discharge: 7759

TABLE 2

SUMMARY OF TREATMENT TECHNOLOGIES AND EFFLUENT DATA FROM OPERATIONS IN THE CONCRETE PRODUCTS INDUSTRY WITH SOME EXEMPLARY FEATURES

Subcategory	Plant No.	Effluent Hydraulic Load l/kkg	(gal/ton)	TSS kg/kkg (lb/1,000 lb); mg/l	Oil & Grease kg/kkg (lb/1,000 lb); mg/l	pH	Treatment Technology	Data Source Source	Date	Amount	Sample
Concrete Block & Brick	7100	50	(12)	0.0010; 20	*	11.3	Settling	EPA	7/9/75	one day	d
	7105	214	(51)	0.012; 54	*	11.5	Settling	EPA	7/15/75	one day	d
	Avg.	132	(32)	0.0065; 42	*	11.4					
	Plants 7102, 7104, 7106, 7107 and 7110 do not discharge										
Concrete Pipe	7247	1000	(245)	0.0060; 6	0.0029; 2.9	7.4	Settling, oil skimming & pH adjustment	EPA	7/22/75	one day	d
		743	(178)	0.013; 17	0.0041; 5.5	7.5		Plant supplied	1/75 3/75	three days	d
	Avg.	872	(212)	0.0095; 11	0.0035; 4.0	7.4					
Precast & Prestressed Concrete Products	7203	24	(5.8)	0.0023; 97	0.000019;0.8	11.5	Settling	EPA	6/20/75	one day	d
	7207	87	(21)	0.020; 230	0.00035; 4	11.4	Settling	EPA	7/15/75	one day	d
	7230	139	(33)	0.068; 488	0.00019; 1.4	10.9	Settling	EPA	7/15/75	one day	d
	7232	8.7	(2.1)	0.0031; 353	8 x 10-7; 0.1	11.7	Settling	EPA	7/3/75	one day	d
	7238	201	(48)	0.0024; 12	0.013; 64[f]	9.8	Settling, mechanical clarification & pH adjustment	EPA	7/26/75	one day	d
		149	(36)	0.013; 88	*	7.5		Plant supplied	6/74	one day	d
	Avg.	101	(29)	0.018; 178	0.00014; 1.4[g]	8.7[h]					
	Plant 7234 does not discharge										

* Unknown
a No discharge from plant
b Yard runoff data
c Treatment equipment sized to handle yard runoff
d Composite sample
e Grab sample
f Oil and grease due to mosquito control
g Average does not include plant 7238
h Average of plants adjusting pH

TABLE 2 (Cont'd)

SUMMARY OF TREATMENT TECHNOLOGIES AND EFFLUENT DATA FROM SOME EXEMPLARY OPERATIONS IN THE CONCRETE PRODUCTS INDUSTRY

Subcategory	Plant No.	Effluent Hydraulic Load l/m^3	(gal/yd^3)	TSS kg/m (lb/yd^3); mg/l	Oil & Grease kg/m^3 (lb/yd^3); mg/l	pH	Treatment Technology	Data Source Source	Date	Amount	Sample
Ready-Mix Concrete	7365	20	(4)	0.0018 (0.003); 89	*	11.8	Settling[c]	EPA	6/19/75	one day	d
	7542	248	(50)	0.00099(0.0017); 4	0.000079(0.00013); 0.32	5.7	Mechanical clarification, pH adjustment & water reuse[c]	EPA	6/5/75	one day	d
	7545	163	(33)	0.0015 (0.0025); 9	0.000052(0.000087); 0.32	6.5	Settling, mechanical clarification; pH adjustment, & water reuse[c]	EPA	6/13/75	one day	d
	7731	69	(14)	0.0010(0.0017); 15	0.00012 (0.00020); 1.76	11.5	Sloped slab[c]	EPA	7/17/75	one day	d
	Avg.	125	(25.3)	0.0013 (0.0022); 10.4	0.000084(0.00014); 0.64	6.1					

Plants 7452, 7729, and 7736 do not discharge
Plant 7757 discharges yard runoff only
Plants 7363, 7385, 7441, 7451, 7487, 7543, 7544, 7699, 7732 and 7750 were also sampled by EPA, but were not discharging during the sampling visit. Treatment technologies for these ten plants were summarized in Table 1.

SECTION II

INDUSTRY CHARACTERIZATION

This document presents an analysis of the available technologies for the control of water pollution from the concrete products industry, and will provide guidance in determining permit requirements issued under the National Pollutant Discharge Elimination System (NPDES).

The products covered in this report are listed below with their SIC designations:

a. Concrete Block and Brick (3271)
b. Concrete Products, N.E.C. (3272)
c. Ready-Mixed Concrete (3273)

The data for identification and analyses were derived from a number of sources. These sources included EPA NPDES permit information, published literature, technical consultants, on-site visits, verification sampling at manufacturing plants throughout the U.S., and interviews and meetings with various trade associations, manufacturers, and regional EPA personnel. The references used in developing the guidelines reported herein are included in Section XIII of this report.

Table 3 summarizes the data base for the plants studied in this volume. In addition to those plants visited and sampled, some additional data was collected through a survey of 658 plants.

TABLE 3

Summary of Data Base

Plant Type	Total Number of Plants in US		Plants Surveyed	Visited	Sampled By EPA
	Census/	Industry			
Concrete block and brick, autoclave curing---------	1388	1560	4	6	2
Concrete block and brick, low pressure steam curing---			7	7	1
Concrete Pipe		390	153	9	3
Precast Concrete products	3595	app. 2500	12	7	2
Prestressed and Precast			12	3	1
Prestressed Concrete products			11	5	3
Ready-Mixed Concrete Permanent Plants			437	54	15
Ready-Mixed Concrete Portable Plants	4915	8000	21	2	0
Ready-Mixed Concrete Mobile Plants			1	1	0
Total	9898	12,496	658	94	27

CONCRETE BLOCK AND BRICK

The U.S. Bureau of the Census shows that in 1972 there were 1300 companies operating 1,388 establishments engaged in the manufacture of concrete building block and brick with 416 establishments having 20 employees or more.

Concrete block and brick are classified into the following products: structural block produced with lightweight aggregate such as cinder, expanded shale, pumice or other materials; structural block produced with heavyweight aggregate such as sand, gravel, crushed stone or other materials; decorative block - such as screen block, split block, slump block and shadowal block; and concrete brick.

The 1972 production for each product is given below:

Lightweight block	1,814.7	million block equivalents*
Heavyweight block	833.1	million block equivalents*
Decorative block	90.2	million block equivalents*
Concrete brick	420.7	million block equivalents*
Total	3,158.7	

*Block equivalents are 20 cm x 20 cm x 41 cm (8 in. x 8 in. x 16 in.)

Industry sources indicate that 62 million kkg (69 million tons) of concrete block and brick were produced in the U.S. in 1972.

The process for the manufacture of concrete block and brick consists of mixing, forming and curing. The raw materials for the block and brick, aggregate and cement, are shipped to the plant by rail or by truck. The aggregates are normally stored outside and kept moist until they are transferred to the batch plant by belt or screw conveyor into distribution bins. The cement is usually received in bulk form and transferred to a storage silo by screw or air conveyor. Typically, the aggregate, cement and water are weighed and batched into a three cubic meter (four cubic yard) rotary mixer. The concrete mix used for production of block and brick contains less water than ready-mixed concrete. The mixed concrete is then fed into an automatic block molding machine, where the moist mix is rammed, pressed or vibrated into the desired shape. The product is then stacked onto iron framework cars and allowed to cure at 50°C (120°F) for four hours. The quantity of water in the mix is critical, as too much will cause severe shrinkage, and too little will reduce block strength and produce friable corners. Colors may be added to the mix to produce decorative block. Occasionally the block may be split to expose a rough decorative surface or may be sawed to a particular shape.

The production of a structural high-strength block, within a reasonable time period, necessitates curing the block under moist conditions. One of two methods is generally used in the block industry: low pressure steam (75-85% of total production); and autoclaves, high pressure steam, (15-25%). In the low pressure steam process, the loaded curing cars are placed into a chamber or kiln where low pressure steam less than 9.7 atm (150 psi) is injected from perforated pipes for approximately 8-10 hours. The length of curing is dependent on mix conditions, user specifications, and ambient temperature. Waste water from this curing method

consists, primarily, of steam condensate which contains some suspended solids, dissolved solids, and a high pH (10-11) due to the calcium oxide content of the cement. The low pressure steam is generated by a boiler which requires periodic blowdown.

The autoclave curing method produces a higher strength block in a shorter time period with less shrinkage than the low pressure steam curing process. The cars containing preset blocks are loaded into a large horizontal, cylindrically shaped autoclave where high pressure steam is injected or convected. After a curing cycle of about 8 hours the steam is released to the atmosphere and the blocks are removed and prepared for storage. One special form of steam production utilizes a hot oil convection method, where water is placed in a trough in the autoclave, and hot oil heats the water into steam. After completing this cycle, the autoclave is cooled, and a portion of the steam condenses back to the trough as water. Periodically, this water is discharged because the alkalinity is corrosive to the steel racks.

CONCRETE PRODUCTS, NOT ELSEWHERE CLASSIFIED

Concrete products, not elsewhere classified are comprised of three basic types of products: concrete pipe, precast concrete products and prestressed concrete products. According to the U.S. Bureau of the Census, 3,199 companies operated 3595 plants in the concrete products (N.E.C.) industry in 1972.

CONCRETE PIPE

From the 1972 Census of Manufacturers, the following is a compilation of concrete pipe products and their production.

product	production	
	kkg	tons
Culvert pipe		
reinforced	2,691,000	2,965,000
non-reinforced	228,000	251,000
Storm Sewer Pipe		
reinforced	3,321,000	3,660,000
non-reinforced	150,000	165,000
Sanitary Sewer Pipe		
reinforced	1,738,000	1,915,000
non-reinforced	279,000	307,000
Pressure Pipe	meters	feet
reinforced	396,000	1,300,000
prestressed	701,000	2,300,000
pretensioned	884,000	2,900,000
other pressure pipe	withheld	
Irrigation Pipe and Drain	kkg	tons
Tile	446,000	491,000
Other Concrete Pipe (e.g., manholes and conduits)	1,867,000	2,058,000

The basic raw materials of concrete pipe manufacture are portland cement, aggregate, and water. For reinforced pipe, a steel wire cage is added to provide increased strength. The proportions of these materials vary, depending on the manufacturing process and strength requirement.

Concrete pipe is generally produced by three methods. The vertical packerhead (tamping) method involves the use of a moist concrete mix which is compacted and vibrated into a steel form by a machine called a packerhead. This method is generally used to produce pipe up to 1.5 meters (5 ft) in diameter. The vertical cast method can be used to produce any size of reinforced pipe, but it is generally limited to diameters over 1.5 meters (5 ft) due to the high cost of labor and time required. A wet concrete mix is produced in a central mixer and transported to a vertical steel form with transport buckets. The concrete is allowed to set, then the forms are stripped. The spin casting production method is generally used to produce reinforced pipe up to 1.2 meters (4 ft) in diameter. A reinforcing cage is fabricated and positioned in a form which is then placed horizontally on a high speed roller drive mechanism. The form is rotated at a high rate, while the concrete is directed evenly by a reciprocating nozzle on the inside of the form. The spinning action densifies the concrete on the inside of the form and dewaters it. Water flows off the inside surface of the pipe, and the concrete surface is finished by a mechanical roller. Reinforced concrete

pressure pipe, produced by spin casting, uses a permanent form, i.e., remains with the pipe. A sheet steel cylinder is fabricated, hydraulicly tested, then placed on the spin cast machine, and concrete is poured inside as with reinforced pipe.

In all methods, when the concrete pipe has reached a certain green (uncured) strength, it is cured by the application of low pressure steam either in a kiln or in a chamber constructed around the pipe. For pipe produced by the tamping method, the forms are generally stripped before steam curing, while the spin cast and vertical cast pipe forms are generally left on the pipe during curing. All of the pipe forms are coated with a form release oil to facilitate the separation of the pipe and form.

The production of reinforced pipe other than pressure pipe uses a welded wire cage for the reinforcing member which is embedded in the circumference of the pipe. The reinforcing cage is usually fabricated from the wire coils in an automatic machine which cuts and welds the wire into a cylinder.

Pressure pipe production may include the following operations:

(1) fabrication of a steel cylinder;
(2) hydraulic testing of the cylinder;
(3) insertion of the cylinder into a vertical casting form or spin cast machine;
(4) batch mixing cement, aggregate and water;
(5) pouring, or placing and compacting, the concrete within the pipe form;
(6) stripping the pipe forms;
(7) curing the pipe with low pressure steam;
(8) circumferentially wrapping the cured pipe with high strength steel wire;
(9) coating the steel wire wrap with concrete grout, and
(10) inspection and storage.

The production of pressure pipe involves several more manufacturing steps than required for other concrete pipe including prestressing with high strength wire. These additional operations make the pressure pipe more expensive to produce with a resultant increase in selling price.

PRECAST CONCRETE PRODUCTS

Precast concrete products include:

product	1972 production kkg	tons
Roof and floor units		
slabs and tile	370,000	408,000
joints and beams	110,000	121,000
Architectural wall panels	694,000	765,000
Pilings, posts and poles	84,000	93,000
Cast stone (products for architectural purposes)	unknown	unknown
Prefabricated building systems	148,000	163,000
Other precast construction prod.	unknown	unknown
Burial vaults and boxes	235,000	259,000
Silo staves	139,000	153,000
Septic tanks	1,050,000	1,157,000
Dry-mixed concrete materials (e.g., Sakrete)	1,748,000	1,926,000
Other precast (e.g., laundry tubs)	unknown	unknown
Estimated Total	4,578,000	5,045,000
Estimated Total (less dry mixed concrete)	2,830,000	3,119,000

The raw materials of precast concrete products are cement, aggregate and water. Reinforced concrete products contain steel structural members to provide increased strength. The production of simple precast concrete products (i.e., transformer pads, meter boxes, pilings, utility vaults, steps, cattleguards, and balconies) involves mixing the cement, aggregate and water in a central mixer, pouring the concrete into forms and allowing it to cure overnight. The forms are removed the following morning and the cure is completed under ambient conditions.

Precast architectural wall panels are generally finished to produce a decorative surface of exposed aggregate. Although there are several methods of production, the one frequently used involves spreading a retarder in the bottom of a form, placing reinforcing steel in the form, and casting the concrete mix. The concrete is allowed to set, the form is removed and the surface with the retarder added is either washed with a weak solution of acid, sandblasted, or washed with high pressure water. Since the retarder prevents the setting of the surface cement, washing exposes the coarse aggregate. The panel then cures completely in a storage yard.

PRESTRESSED CONCRETE PRODUCTS

Prestressed concrete products are chiefly used as structural and architectural components and include:

product	production	
	kkg	tons
Single tees, double tees, and channels	14,402,000	15,871,000
Piling, bearing piles, and sheet piles	1,470,000	1,620,000
Bridge beams	470,000	518,000
Solid and hollow cored slabs and panels	2,238,000	2,466,000
Other prestressed products (e.g., arches)	740,000	815,000
Joist, girders, and beams (other than bridge beams)	44,000	48,000
Total	19,364,000	21,338,000

The raw materials of prestressed concrete products are cement, aggregate, water, and steel tendons. Prestressed concrete products are manufactured by:

(1) inserting the steel tendons in a metal form,
(2) stressing the steel tendons,
(3) batch mixing in a central mixer,
(4) pouring the concrete into the form,
(5) overnight curing of the product using low pressure steam.
(6) removal of the metal form and release of the external stress on the steel tendons,
(7) for certain prestressed products, end-sawing or finishing, and
(8) product testing and storage.

Prestressed and precast products are produced similarly except that prestressed products utilize steel cables (tendons) in tension in place of steel rods for reinforcement. Prestressing also prevents tension cracks in a structural member under design loads. This normally allows the use of a structural member with a smaller cross sectional area and lighter in weight. Prestressed concrete products may be either pretensioned or post-tensioned. Prestressed pretensioned products are made by placing the steel cables in tension in the form before concrete is added. Once the concrete is set, cured and the forms are removed, the external tension is released from the steel cables. The cable remains stressed due to the compression of the concrete around the cable. This method of prestressing predominates in the industry.

Prestressed post-tensioned products are made by placing cables in the form, casting the concrete, allowing it to set and cure to a certain strength, then placing the steel tendons under tension. Cables must be protected with a steel or plastic tube or mastic coating to prevent bonding with the concrete prior to tensioning. Cables may or may not be grouted while under tension and are locked under tension by appropriate end anchorage or clamps. An alternate method of post-tensioning involves casting the concrete member with a tube or slot for future insertion of the steel tendon.

READY-MIXED CONCRETE

The ready-mixed concrete establishments engage in manufacturing portland cement concrete produced and delivered to the purchaser in a plastic (unhardened) state. Ready-mixed concrete represents the largest category of portland cement concrete used in the United States. According to U.S. Bureau of Census figures, 159.4 million cu m (208.5 million cu yd) were produced in 1972. This total quantity of ready-mixed concrete was produced by 3978 companies operating 4,915 total establishments, of which 1,328 establishments utilized 20 employees or more. However, the National Ready-Mixed Concrete Association (NMRCA) puts the number of plants at approimately 8,000. NRMCA data indicate there were 5,266 companies in 1971. A state-by-state listing of the number of companies in this industry in 1971 provided by NRMCA is presented in Table 4.

The two processes used for ready-mixed concrete are batching and mixing. At a batch plant, the concrete is mixed in the truck mixer, while at a central mix plant, the concrete is prepared in a plant mixer then transferred to a truck mixer or agitator for delivery.

TABLE 4

Location of U.S. Concrete Operators*

States	No.	States	No.
Alabama	111	Montana	43
Alaska	2	Nebraska	101
Arizona	70	Nevada	27
Arkansas	93	New Hampshire	20
California	356	New Jersey	76
Colorado	91	New Mexico	58
Connecticut	44	New York	207
D.C.	3	North Carolina	98
Delaware	14	North Dakota	43
Florida	142	Ohio	216
Georgia	108	Oklahoma	163
Hawaii	4	Oregon	95
Idaho	43	Pennsylvania	195
Illinois	282	Rhode Island	8
Indiana	171	South Carolina	69
Iowa	221	South Dakota	67
Kansas	139	Tennessee	84
Kentucky	128	Texas	290
Louisiana	115	Utah	62
Maine	19	Vermont	11
Maryland	40	Virginia	78
Massachusetts	48	Washington	78
Michigan	217	West Virginia	52
Minnesota	163	Wisconsin	150
Mississippi	86	Wyoming	36
Missouri	229		
		TOTAL	5,266

* 1971 NRMCA

The batching and mixing equipment used at ready-mixed concrete plants ranges in size and complexity from small portable mixers to automated permanent plants with central mixers capable of producing several hundred cubic meters of concrete per hour.

The raw materials for the concrete, coarse and fine aggregate and cement are usually shipped to the plant via rail or truck. However, at some 300 ready-mixed establishments according to Census figures, the coarse or fine aggregate is mined or quarried at the plant site. The coarse and fine aggregates are generally stockpiled in the open, where they are kept saturated with moisture. The aggregates are transferred to the plant by conveyor, front end loader or crane, to distribution bins. The portland cement is usually received in bulk form either by rail or by truck, transferred to a cement hopper, and then conveyed to a storage silo or to the central batch bin. The aggregates and cement are weighed and blended into a mixer with a premeasured quantity of water and the concrete is mixed for specified length of time. At a batch plant, the mixing is accomplished in the truck mixer, while in a central mix plant, a central mixer is used which then transfers the concrete to an agitator truck.

Ready mix concrete plants can also be differentiated by the location of the batching and mixing operations. The three types of facilities are:

(1) Permanent - This type of plant uses ready-mixed trucks which deliver various types of concrete to numerous customers from a central plant. At a permanent plant the concrete may be centrally mixed and hauled in agitator trucks or may be dry batched into mixer trucks and mixed in the truck on the way to the job.

(2) Portable - This is the type of plant used on large highway and airport paving jobs. The concrete may be produced in a portable central mixer and hauled in agitator trucks or it may be dry batched into trucks and hauled to a portable mixer at the construction site. The latter is the older method.

(3) Mobile - The mobile concrete plant utilizes trucks capable of measuring and mixing the aggregate, cement, and water at the job site. The raw materials are transported separately on the mobile truck, proportioned and mixed in the truck-mounted mixer at the job site. Mobile ready-mixed concrete is primarily used for small

jobs that can be economically serviced without returning to the base plant after each job.

The permanent ready-mixed concrete plant may operate either as a dry batch plant or a central mixer plant. In a dry batch plant, the mix of aggregate and cement is weighed and transferred in a dry state to the ready-mixed trucks along with a proportioned amount of water, then mixed in the truck. This type of operation is found in approximately three-fourths of the plants in the permanent segment of the ready-mixed industry. The other one-fourth of these plants uses a central mixer with an average capacity of 4 cu m (5 cu yd).

A general practice in the construction industry is to order slightly more concrete than necessary to complete the job to prevent running short. This practice results in an excess of concrete in the truck which must be either dumped or reused. In some cases, the unused concrete is dumped on the job site, however, in most cases, it returns to the plant in the ready-mixed truck and either used for paving the plant yard, or flushed out as waste material. The disposal of the unused concrete depends on the amount left in the truck, the length of time since batching, the formulation of the following order, and other factors. The amount of returned waste concrete varies but averages between 1 to 4 percent of average daily production. Ready-mixed concrete plants use water primarily in the batching of concrete, and for washing out the ready-mixed trucks and central mixer. The washout is an essential part of the daily operations of all concrete plants to prevent hardening of the concrete in the equipment and consequent lost time and maintenance costs.

The concrete produced by ready-mixed plants can be considered to be made of two major components, aggregates and paste. The aggregates generally occupy 60 to 80 percent of the volume of concrete. The most commonly used aggregates (sand, gravel, crushed stone, and air- cooled blast furnace slag) produce a normal weight concrete having a density in the range of 2,166 to 2,568 kg/cu m (135 to 160 lb/cu ft). Structural lightweight concretes use aggregates such as expanded shale, clay, slate and slag. The lightweight concretes have densities ranging from 1,364 to 1,846 kg/cu m (85 to 115 lb/cu ft). Other lightweight materials such as pumice, scoria, perlite, vermiculite, and diatomite are used to produce insulating concretes weighing 241 to 1,445 kg/cu m (15 to 90 lb/cu ft). Heavyweight concrete is produced primarily for nuclear applications and uses heavy aggregates such as barite, limonite, magnetite, ilmenite, and iron or steel particles.

In normal-weight concrete, the aggregates are generally classified into two size groups, fine and coarse. Fine aggregates consist usually of sand with particle sizes smaller than a number 4 standard sieve or approximately 0.6 cm (1/4 inch). The coarse aggregates are usually crushed stone and gravel with particle sizes retained on a number 4 standard sieve.

The paste component of the concrete is composed of cement, water, admixtures and sometimes entrained air. The cement paste ordinarily constitutes 20 to 40 percent of the total volume of concrete and consists in volume of between 7 and 15 percent cement - 284 to 567 kg/cu m (375 to 750 lb/cu yd) and 14 to 21 percent - 174 to 265 kg/cu m water (230 to 350 lb/cu yd). Air content in air-entrained concrete range up to about 7.5 percent of the volume of the concrete. A typical formulation for normal-weight air entrained concrete is shown as follows:

	kg/cu m	lb/cu yd
Fine aggregate	410	1,180
Coarse aggregate	625	1,800 (max. 3/4 in.)
Cement	174	500
Water	104	300
Air Entrainment Agent	0.26-0.28	0.75-0.80
Air	6% by volume	6% by volume

Ideally each particle of aggregate is completely coated with paste, and all of the space between aggregate particles is completely filled with paste. The quality of the concrete is greatly dependent upon the quality of the paste which in turn is dependent upon the ratio of water to cement used, and the extent of curing. The cementing properties of the paste are due to the chemical reaction between cement and water called hydration, which requires time and favorable conditions.

A notable advance in concrete technology in recent years was the development of air entrainment. The use of entrained air is recommended in concrete for nearly all purposes, but the principal reason is to improve resistance to freezing and thawing exposure. Air entrained concrete is produced by using either an air entraining cement or an air entraining admixture added during the mixing of the concrete. An air entraining cement contains material interground with Portland cement during the process of manufacture. One of these materials has been described as a mixture of triethanolamine and a calcium salt of modified lignosulfonic

acid. An air entraining admixture, on the other hand, is added directly to the concrete materials either before or during mixing. Typical agents consist of the following: a saponified natural resin or stabilized wood resin derived from pulp and paper production, such as Vinsol; a combination of a primary alkylolamide plus alkyl aryl sulfonate; a saponin or keratin compound; or generically a triethanolamine salt of a sulfonated hydrocarbon or fatty acid glyceride. Some more recently developed agents include vinyl acetate or a styrene copolymer of vinyl acetate. Many of these agents contain combinations of air entrainment agents, wetting agents and dispersing agents.

Other admixtures which may be added to the concrete before or during mixing include water reducing agents, retarders, accelerators, and others. A water reducing admixture is a material used for the purpose of reducing the quantity of mixing water required to produce concrete of a given consistency. Some water reducing admixtures such as lignosulfonic acids and their salts, also can be used for air entrainment. Other water reducers act as set retarders.

A retarding admixture is a material that is used for the purpose of increasing the setting time of concrete. Retarders are sometimes used in concrete to (1) offset the accelerating effect of hot weather on the setting of the concrete, or (2) delay the initial set of the concrete where difficult or unusual situations occur or where desired to produce special effects on concrete products. Because most retarders also function as water reducers, they are frequently referred to as water-reducing retarders. Hydroxylated carboxylic acids and their salts are ofter used for this purpose.

An accelerating admixture is used to accelerate the setting and strength development of the concrete. The most commonly used accelerating admixture is calcium chloride. There are many commercial admixtures sold which combine various functions under one trade name.

PRODUCTION OF CONCRETE PRODUCTS

The 1972 production and employment figures for the concrete products category was derived from the Bureau of the Census (U.S. Department of Commerce) publications and from data developed from other sources during this study. These figures are tabulated as follow in Table 5:

TABLE 5

Production of Concrete Products

SIC	Product	1972 Production kkg (tons)	Employment No. of Employees*
3271	Concrete block & brick, total	62,000,000 (69,000,000)	15,200
	Autoclave Curing	14,000,000 (15,500,000)	---
	Low Pressure Steam Curing	48,000,000 (53,500,000)	---
3272	Concrete Products, NEC, total	35,100,000 (38,600,000)	53,500
	Concrete Pipe (excluding pressure pipe)	10,700,000 (11,800,000)	---
	Precast and Pre-stressed Concrete Products	21,400,000 (23,500,000)	---
3273	Ready-Mixed Concrete, total	378,000,000** (417,000,000)**	56,900

*Production workers only
**Assumed 1.8 kkg per cubic meter of concrete

SECTION III

INDUSTRY CATEGORIZATION

The concrete products industry was subcategorized on a general product basis. This was done because of the differences between manufacturing processes and the resultant pollutants. The following lists the subcategories discussed in this report.

TABLE 6

Industry Subcategorization

Subcategory
Concrete Block and Brick
Concrete Pipe
Precast & Prestressed Products
Ready-Mixed Concrete

FACTORS CONSIDERED

Manufacturing Processes

The processes generally used in the concrete products industry include mixing aggregates, cement and water and transporting the mixture to the job site in the case of ready-mixed concrete or casting and curing the product in the case of block and brick and concrete products. Upon examination of the various processes and wastes generated subcategorization was consistent with the type of manufacturing process.

Raw Materials

The raw materials for all commodities used are principally cement, aggregates and water which vary only in proportion in a given product. Raw materials are therefore not a suitable basis for subcategorization.

Waste Water Pollutants

The principal pollutants from this industry are pH, total suspended solids and oil and grease. There are occasional limited instances of deleterious materials such as the many different types of admixtures that may be used in a concrete mix.

Although suspended solids are ubiquitous, the treatability of the effluents varies widely depending heavily, among other things, upon the other constituents present in the raw materials. Concrete pipe and precast and prestressed concrete products could have oil and grease in their effluent and deserve to be considered separately from the other commodities.

Water Use Volume

Water use is determined by the needs of the individual concrete manufacturing facility and varies greatly depending mainly on the operational factors. For the manufacturing processes studied herein, water use varies from a negligible amount to 10,000 liters per kkg of product.

Differences in water use fall along the lines of product differences which were already a basis for subcategorization.

Plant Size

In the plants from which EPA obtained information, capacity varied from as little as 1,360 kkg per year to 540,000 kkg per year. Based on the data obtained it appears that the amount of wastes generated is directly related to amount of product; therefore subcategorization based on plant size is not necessary.

Plant Age

The newest plant studied was less than a year old and the oldest was 50 years old. Often the equipment and manufacturing practices at new and old plants are identical. There is no correlation between plant age and the ability to treat process waste water to acceptable pollutant levels. Therefore, plant age was not an acceptable criterion for subcategorization.

SECTION IV

WATER USE AND WASTE CHARACTERIZATION

The quantity of water use at facilities in the concrete products industry ranges from zero to 2,830,000 liter per day (0 to 730,000 gallons per day). Plants using large quantities of water are those producing pipe by the spincasting method and ready-mixed concrete plants which have extensive equipment washings.

Waste water in the concrete products industry originates from the following sources:

(1) Process water - mix water
wash water
miscellaneous water

(2) Non-process water

(3) Contaminated storm runoff

WATER USE

Process Water

Process water is defined as that water which, during the manufacturing process, comes into direct contact with any raw material, intermediate product, by-product or product used in or resulting from the process.

Mix water is therefore process water. Since it is a vital component of any concrete formulation. Mix water is incorporated in the cement paste and remains with the product.

Wash water comes under the heading of process water because it comes into contact with either the raw materials or products. Wash water is used extensively in this industry and is usually the greatest source of waste water. In manufacturing ready-mixed concrete, water is used for washing mixer trucks both internally and externally, and for washing out central mixers. In the manufacture of concrete products, water is used for washing transport buckets, central mixers and forms. At some plants water is used for

washing conveyor belts. Other uses include washing the surface of wall panels with a weak acid solution or water under high pressure to expose aggregate for decorative purposes. Production of concrete pressure pipe requires additional process water for hydrostatic testing of steel reinforcing cylinders and the prewetting of reinforced pressure pipe before outside coating of concrete is applied.

Miscellaneous water uses include spraying stockpiles to keep aggregates in the saturated, surface-dry condition. This water is usually low volume and may be either evaporated or absorbed in the raw material.

Miscellaneous water uses vary widely among the facilities. It is generally used for floor washing, clean-up and sanitary purposes. There is also miscellaneous process water used for yard dust control, aggregate moisture control, chute rinse-off and equipment clean-up, which in most plants becomes yard runoff.

Significant quantities of water may be used to control dust on plant yards, the amount varying seasonally. This water in many instances evaporates or percolates.

Relatively small amounts of contact water are used for saw blade cooling in the manufacture of concrete products.

Non-process Water

Non-process water is defined as that used for auxiliary operations necessary for the manufacture of a product but not contacting the process materials. For example, boiler water and water treatment regeneration are auxiliary operations. The volume of water used for these purposes is minimal.

The largest use of non-process water is as non-contact cooling water for equipment such as pumps and air compressors.

PROCESS WASTE CHARACTERIZATION

CONCRETE BLOCK AND BRICK

Concrete block and brick may be lightweight or heavyweight depending on the type of aggregate used. The methods of forming block and brick are similar at most plants. However, two different curing methods are used. Concrete block and brick manufacture was subcategorized based on curing method, i.e., low pressure steam and autoclave

curing. Low pressure steam curing is predominant in the industry. Live steam at low pressure is injected into a kiln in which uncured block has been stacked. Process waste water generated by this operation consists of steam condensate, which has a pH greater than nine and contains suspended solids. This is caused by direct contact with the product. Autoclave curing utilizes high pressure steam at 9.7 atm (150 psi) and above in autoclaves which have been loaded with uncured block. Waste water from this process includes autoclave blowdown condensate and autoclave purge, both having pH greater than nine and containing suspended solids from product contact.

In this study 13 plants were visited and 3 plants were sampled. Plant ages in this study range from 2 to 35 years.

LOW PRESSURE STEAM CURING

The production of concrete block and brick with low pressure steam curing includes: batch mixing of cement, water and aggregates; forming the block in a machine which presses, rams or vibrates the moist mix into blocks; curing of the block with low pressure steam in a kiln; and visual inspection, stacking and loading for delivery. Low pressure steam is produced in a boiler and is injected into the kilns. Plant 7103 produces part of its block by atmospheric curing and the remainder by low pressure steam curing. In the atmospheric curing process, the formed block is stacked in the plant yard and cured by ambient heat and humidity plus the internal effects of the heat of hydration. Plant 7104 cures block by stacking them in an enclosure after they are formed and allowing them to cure with their heat of hydration and ambient heat and humidity. A flow diagram for concrete block and brick produced by the low pressure steam curing process is shown in Figure 1. Annual production of concrete block and brick by this process for the 7 plants contacted ranges from 26,600 to 79,800 kkg (29,300 to 88,000 tons).

The principal process water uses are mixing the concrete and curing the block and brick. Miscellaneous process water uses include conveyor belt washing at plant 7104, yard dust control at plant 7109, aggregate moisture control and delivery truck washoff at plant 7110. Non-process water uses include make-up water for boilers, water treatment regeneration, non-contact cooling of bearings and compressors and boiler blowdown.

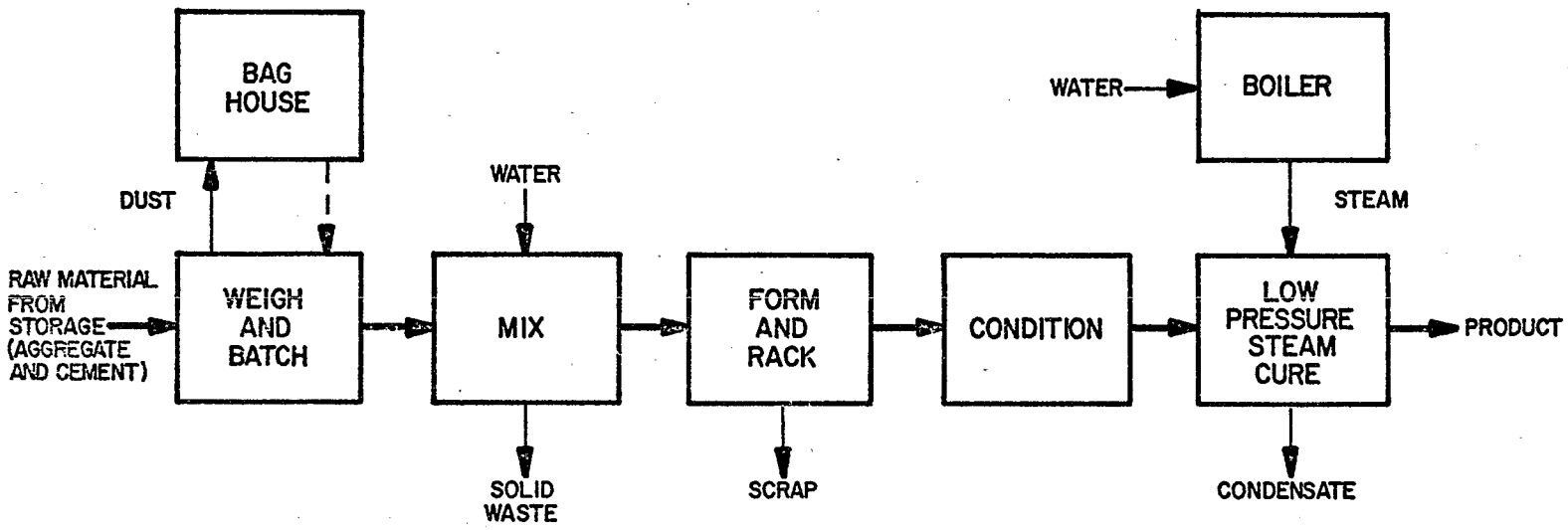

FIGURE I
PRODUCTION OF CONCRETE BLOCK AND BRICK
(LOW PRESSURE STEAM CURING)

Total water use varies with production and duration of curing. For the plants contacted water use ranges from 24 to 35 liters/kkg (5.7 to 8.1 gallons/ton). Mix water use per unit weight of production varies from 24 to 30 liters/kkg (5.7 to 7.1 gallons/ton) and becomes part of the product. Process hydraulic loads at selected plants are shown below:

	Amounts, liters/kkg (gal/ton) of		
Plant	Mix Water	Low Pressure Steam Condensate	Conveyor Belt Washoff
7102	unknown	10.6 (2.5)	none
7103	24 (5.8)	0.2 (0.04)	none
7104	24 (5.8)	none	5.2 (1.3)
7106	24 (5.8)	unknown	none
7108	30 (7.1)	unknown	none
7109	26 (6.0)	8.9 (2.1)	none
7110	24 (5.8)	unknown	none

Waste water pollutants from low pressure steam curing are suspended solids, COD, oil and grease and high pH. Self-monitoring data supplied by plant 7109 showed 0.0005 kg/kkg (0.0010 lb/ton) TSS, 0.0002 kg/kkg (0.0004 lb/ton) COD, and a pH of 11.1. Plant 7111 showed 0.005 kg/kkg of oil and grease in a concentration of 35 mg/l. The concentrations of the other pollutants were 64 mg/liter TSS and 26 mg/liter COD. All plants but 7104 had steam condensate containing these pollutants.

Solid wastes from these plants include cement dust from batching, waste concrete from mixer clean out, and scrap block and brick from forming, stacking and loading operations. In most cases cement dust is collected in a baghouse and returned to the cement storage silos. Solid wastes are used as fill in all plants contacted.

Miscellaneous wastes come from equipment washoff, accidental spill washdown and aggregate moisture control. Non-process waste water includes boiler blowdown water and influent water treatment regeneration wastes.

Raw waste loads vary with production. The waste concrete and scrap block for plants studied are shown below.

Plant	Waste Concrete and Scrap Block kg/kkg (lb/1000lb)
7102	26
7103	10
7104	4
7106	19
7108	13
7109	2
7110	9

AUTOCLAVE CURING

The production of autoclave-cured concrete block and brick includes: batch mixing of cement, water and aggregates; forming of the block in a block machine where the moist mix is rammed, pressed, or vibrated into shape; curing of the block with high pressure steam in an autoclave; and stacking and loading for delivery. High pressure steam is generated by two methods. Plants 7100 and 7101 use a hot oil convection process in which oil is heated and piped through a water trough at the bottom of the autoclave, forming steam inside the autoclave. Plants 7105 and 7107 produce high pressure steam in an external boiler and inject it into the autoclave. This latter method is used in most plants. A flow diagram for concrete block and brick produced by the autoclave curing process is shown in Figure 2. Annual production of concrete block and brick by this process for the six plants studied ranged from 63,500 to 250,000 kkg (70,000 to 275,000 tons).

The principal process water uses at these plants occur during the mixing of the concrete and curing the block and brick. Miscellaneous process water is used for equipment clean-up and housekeeping within the plant, and aggregate moisture control. Non-process water use includes boiler blowdown and non-contact cooling of bearings and compressors. Water use varies with operating factors, duration of curing, the number of autoclave purges in the convected steam plants. For these reasons, daily water use for the plants contacted ranges from 71 to 227 liters/kkg (17 to 54 gal/ton). The use of mix water, which becomes part of the product, when measured per unit weight of production is relatively constant. Process hydraulic loads at selected plants are shown below:

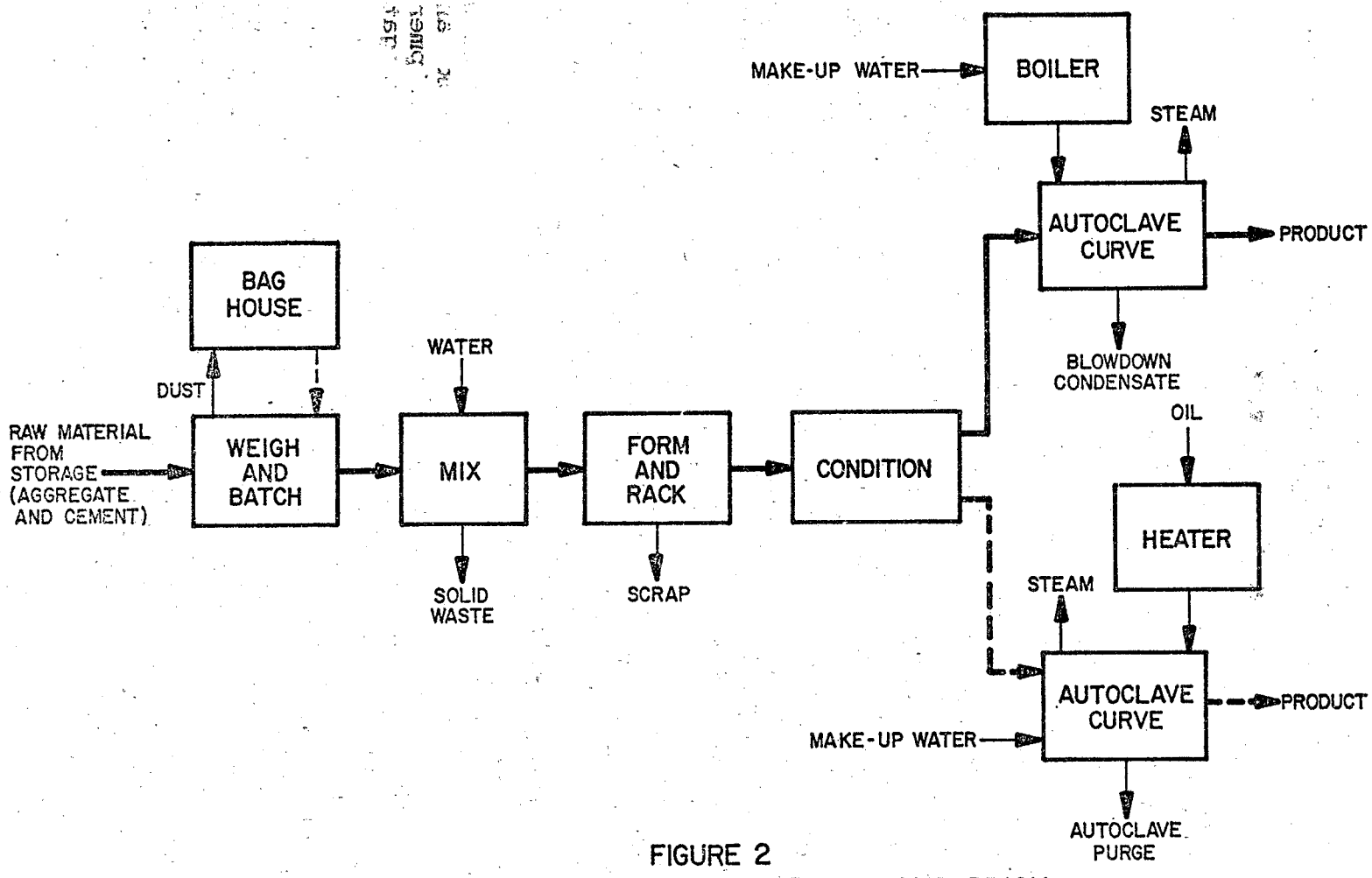

FIGURE 2
PRODUCTION OF CONCRETE BLOCK AND BRICK
(AUTOCLAVE CURING)

	Quantity in liters/kkg of product (gal/ton)			
	7100	7101	7105	7107
mix water	22 (5)	22 (5)	13 (3)	17 (4)
autoclave blowdown condensate	19 (5)	part of autoclave purge	214 (51)	77 (19)
autoclave purge	30 (7)	90 (22)	none	none

Pollutants include suspended solids, COD, oil and grease, and high pH, resulting from autoclave blowdown condensate and in the convection process, autoclave purge. Miscellaneous wastes include equipment washoff, aggregate moisture control and accidental spill clean-up. Solid wastes from plants which cure with autoclaves are cement dust from concrete batching, concrete from mixer clean-out, and scrap from block forming, stacking and loading. Cement dust is usually collected in a baghouse and returned to the cement storage silo. Waste solids are typically landfilled, however, plant 7100 crushes broken block for reuse as aggregate.

Raw waste loads vary from day to day due to operating factors such as housekeeping, ambient temperature and humidity. The amount of autoclave purge is highly variable which affects the amount of raw wastes contained in this purge. The estimated average raw waste loads for some plants contacted in this study follow.

Source	Parameter	Raw Wastes, kg/kkg of product (lb/1,000 lb) 7100	7101	7105	7107	7113
autoclave blowdown condensate	TSS	unknown	unknown	0.035	0.02	0.012
	pH	unknown	unknown	11.5	11.3	12.3
	COD	unknown	unknown	0.018	unknown	0.001 (BOD)
	Oil and grease	unknown	unknown	unknown	unknown	unknown
autoclave purge	TSS	0.005*	0.007	none	none	none
	pH	11.3	11.5	N.A.	N.A.	N.A.
	COD	0.0024	0.004	none	none	none
	Oil and grease	unknown	unknown	none	none	none
combined autoclave and other waste water	TSS	none	none	none	none	0.016
	pH	N.A.	N.A.	N.A.	N.A.	11.6
	BOD	none	none	none	none	0.011
	Oil and grease	none	none	none	none	unknown

*EPA measured data
N.A. not applicable

CONCRETE PIPE

The production of concrete pipe includes batch mixing, fabricating, inserting steel reinforcing, pouring concrete into a pipe form, curing and finishing. Batch mixing involves blending cement, aggregates and water in a central mixer. There are three methods for curing pipe - low pressure steam curing, atmospheric curing or spray curing. Atmospheric curing uses ambient heat and humidity to cure the product. Steam curing involves placing the product in an enclosure into which steam is injected. Water spray curing involves spraying the uncured product with a mist of water to assist curing. There is no waste water from atmospheric curing. Waste water from steam curing and spray curing contains suspended solids, oil and grease and has a high pH. Finishing may include endsawing or application of grout. Pressure pipe production is similar but may also include prestressing with steel wire, fabricating and hydrostatic testing a steel liner, applying a layer of grout, and curing a second time using low pressure steam. Figure 3 is a process flow diagram for the production of culvert, storm sewer, and sanitary sewer pipe. Figure 4 is a process flow diagram for the production of pressure pipe. Annual production of concrete pipe for the 9 plants visited ranges from 16,000 to 106,000 kkg (18,000 to 117,000 tons).

Process water is used for mixing concrete, washing out central mixers, transport buckets and forms for vertical cast pipe, curing and prewetting imbedded pressure pipe. Forms are washed off at 50 per cent of the plants studied. The water used for curing is either in the form of low pressure steam or a fine mist. Miscellaneous process water uses include hydrostatic testing of the steel cylinders for pressure pipe, yard dust control, and equipment washoff. Non-process water uses include boiler blowdown and non-contact cooling of bearings and compressors.

Water use is variable and depends on operating factors, the number of central mixer and transport bucket washouts, and the duration and type of curing. Because of these variables, hydraulic loads in liters/kkg of product (gal/ton) show a wide range. Mix water becomes part of the product and therefore remains relatively constant when expressed as liters/kkg of product.

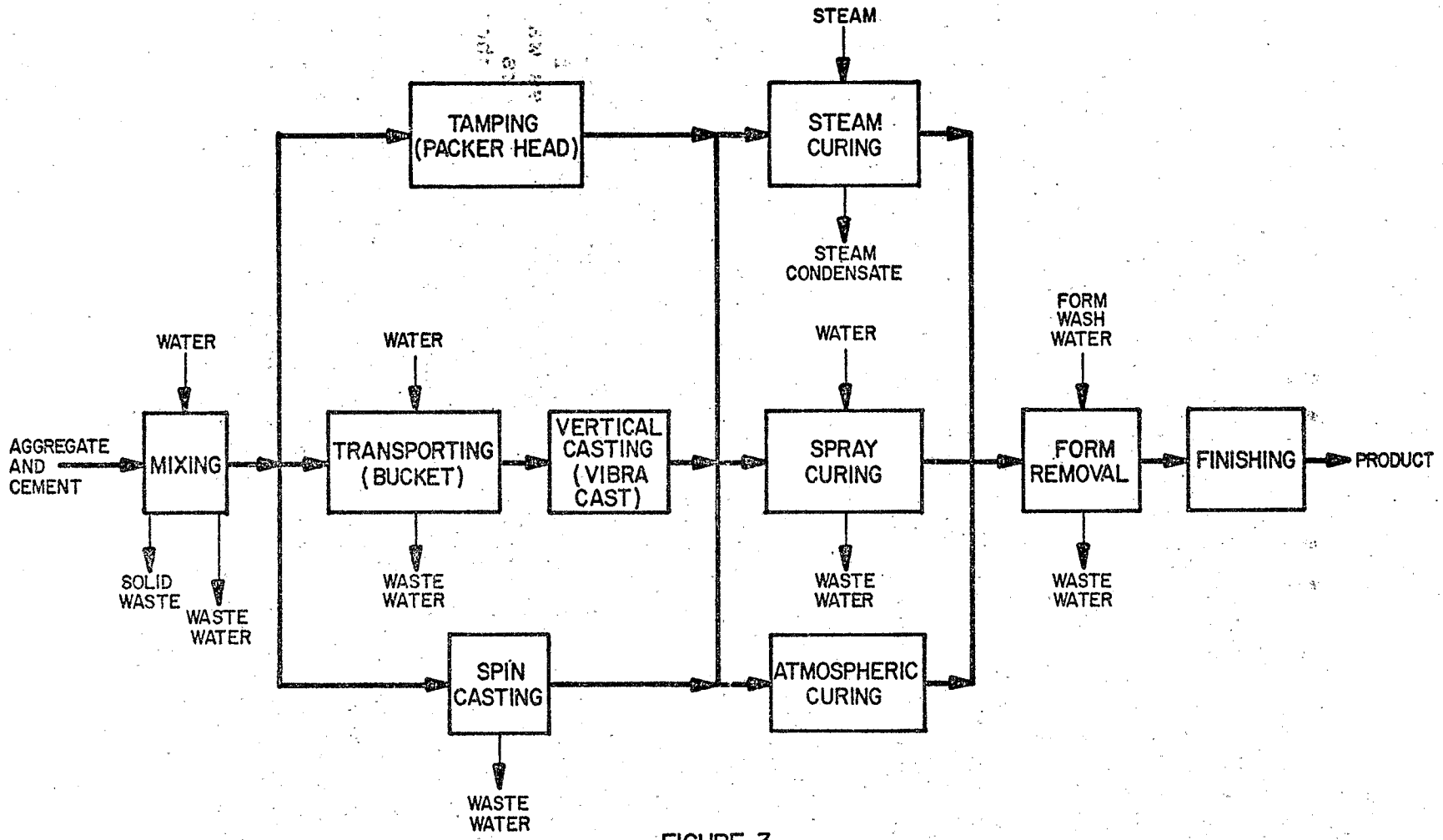

FIGURE 3

PRODUCTION OF CULVERT, STORM SEWER AND SANITARY SEWER CONCRETE PIPE

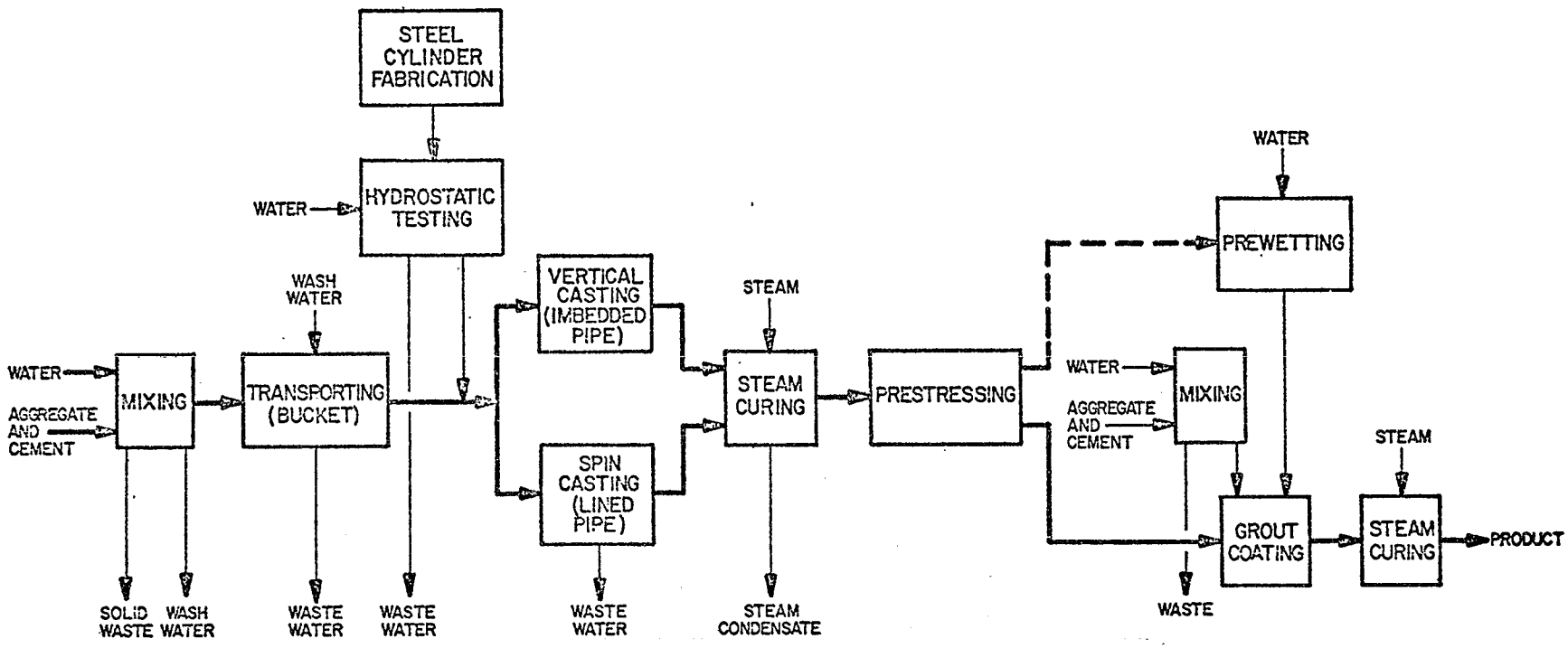

FIGURE 4
PRODUCTION OF CONCRETE PRESSURE PIPE

	Quantity, liters/kkg of product (gal/ton)				
	7201	7205	7224	7229	7233
Mix water	42 (10)	56 (13)	30 (7)	42 (10)	38 (9)
Central mixer and transport bucket washout	7 (1.7)	none	11 (2.6)	unknown	5 (1.2)
Steam condensate	28 (7)	31 (7)	134 (32)	unknown	none
Spray cure water	none	none	36 (9)	none	none
Form washout	1.7 (0.4)	none	included in c/m washout	none	included in c/m washout
Pre-wetting	none	none	none	none	none
Hydrostatic testing	none	none	13 (3)	none	none

	Quantity, liters/kkg of product (gal/ton)			
	7239	7241	7247*	7248*
Mix water	25 (6)	74 (18)	42 (10)	42 (10)
Central mixer and transport bucket washout	none	0.9 (0.2)	334 (80)	21 (5)
Steam condensate	1 (0.25)	unknown	113 (27)	83 (20)
Spray cure water	none	none	none	none
Form washout	1.3 (0.3)	0.9 (0.2)	none	none
Pre-wetting	none	none	150 (36)	unknown
Hydrostatic testing	none	none	75 (18)	unknown

*Pressure Pipe Plant

Additional water use data were obtained from 142 plants through a survey conducted by the American Concrete Pipe Association. These data, collected by the association, are summarized as follows. Figure 5 shows the distribution of nonconsumptive water use from 138 of these plants.

	Maximum	Minimum	Average
Production of plants, kkg/day	772	1.9	135
Mix water, liters/kkg of product	417	2.1	58
Form washout water, liters/kkg of product	235	0.2	21
Curing water, liters/kkg of product	698	0.5	80
Other water, liters/kkg of product	8,258	0.6	300
Steam condensate, liters/kkg of product	8,785	0.1	147
Total waste water generated, liters/kkg of product	8,995	0.2	174

The pollutants in the waste water include suspended solids, oil and grease, pH and COD. These pollutants result from central mixer and transport bucket washout, spincast waste water, condensate from steam curing, spray curing waste water, and form washout. Waste solids also originate from the pre-wetting of imbedded pressure pipe.

Solid wastes include cement dust from concrete batching, solids from mixer clean-out and broken pipe. The cement dust is usually collected in a baghouse and returned to the cement storage silo. Waste solids from mixer cleanout, broken pipe and waste concrete are usually landfilled.

Waste solids from central mixer and transport buckets average 35 kg/cu m (100 lb/cu yd) of central mixer and transport bucket capacity for each washout. In most cases, the plants are unable to quantify raw waste loads. Efforts to obtain samples and thereby directly obtain raw waste data were unsuccessful in most cases because of rapid solidification of the samples.

Raw waste loads vary from day to day and depend on operating factors, the number of central mixer and bucket washouts, duration of curing, and the amount of waste concrete.

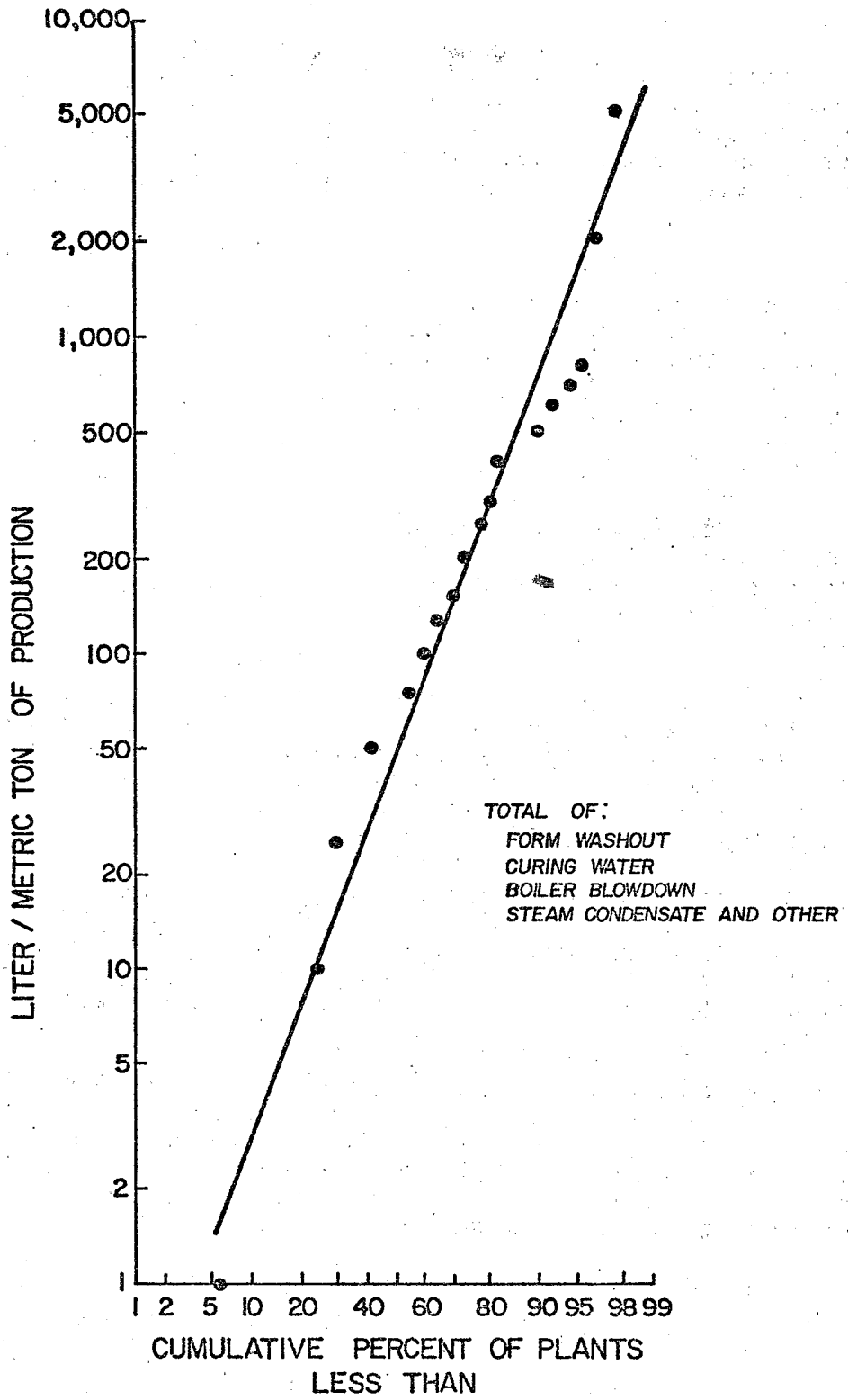

FIGURE 5
DISTRIBUTION OF NONCONSUMPTIVE WATER USE
AT CONCRETE PIPE PLANTS
(DATA FROM 138 PLANTS)

PRECAST AND PRESTRESSED CONCRETE PRODUCTS

The production of precast concrete products includes: preparation of a mold or form; fabrication of steel reinforcement cages; mixing cement, aggregate and water in a central mixer; placing the concrete mixture into the form; initial curing either under atmospheric conditions, with low pressure steam, or with a water spray; removal of the form; completion of curing, usually at atmospheric conditions; and, for special products, a finishing step which may include sawing, washing, etching, or sand blasting.

Prestressed concrete products are manufactured similarly with the additional step of pretensioning or prestressing the steel reinforcing rods, prior to pouring the concrete into the form. Prestressed concrete products are typically cured with low pressure steam. Product finishing, similar to precast products, is common practice. A process flow diagram for precast and prestressed concrete products is shown in Figure 6. Annual production of precast and prestressed concrete products for the 15 plants visited varies from 1,800 to 227,000 kkg (2,000 to 250,000 tons). About 50 percent of the plants surveyed produce both precast and prestressed products. Because of the similarities in these manufacturing processes, only one subcategory was deemed necessary.

Process water is used for mixing concrete; washing central mixer, transport bucket and forms; curing (low pressure steam and spray curing); and product finishing. Miscellaneous process water uses include yard dust control and equipment washoff. Non-process water uses include boiler blowdown and non-contact cooling of bearings and compressors. In this study 15 plants were visited and 6 were sampled.

Water use varies from day to day and depends on production, number of central mixer and transport bucket washouts, duration of curing, and the type of product finishing. Because of these variables, water use in liters/kkg of product for the plants studied shows a wide range.

Process hydraulic loads at selected plants are shown below in liters per kkg of product (gal/ton):

	Plants			
	7200	7203	7204	7206
Mix water	63 (15)	63 (15)	54 (13)	54 (13)

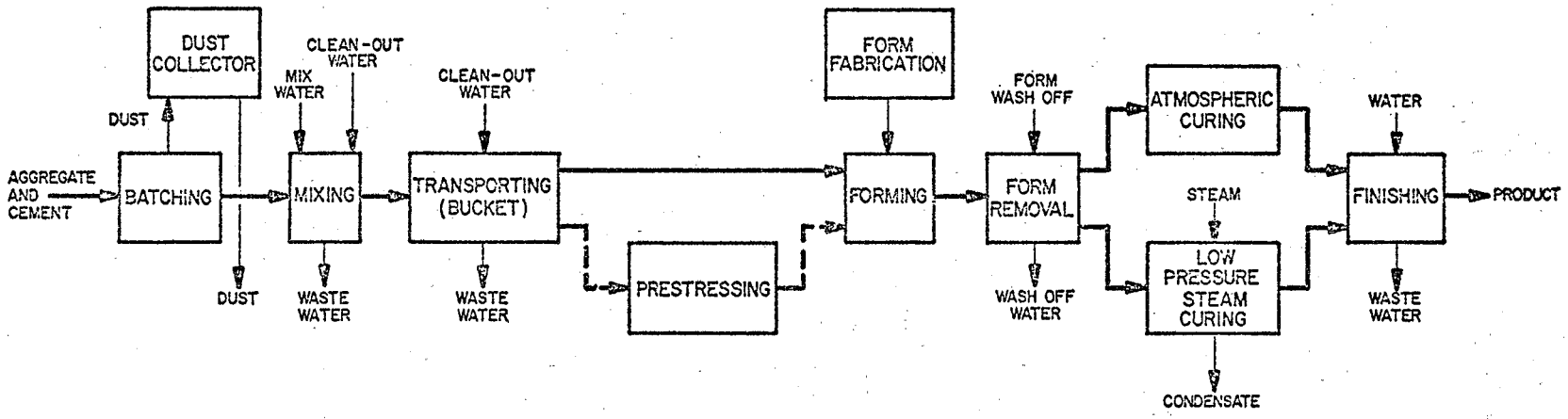

FIGURE 6
PRODUCTION OF PRECAST AND PRESTRESSED CONCRETE PRODUCTS

Central mixer and bucket washout	2 (0.4)	8.2 (2)	14 (3.4)	10 (2.4)
Curing	none*	none*	24 (5.8)	unknown
Product finishing	none	15 (3.5)	none	none

	Plants				
	7207	7230	7231	7232	7234
Mix water	42 (10)	54 (13)	54 (13)	58 (14)	63 (15)
Cental mixer and bucket washout	87 (21)	139 (33)	8.3 (2)	8.7 (2)	104 (25)
Curing	none*	35 (8.4)	none*	unknown	209 (50)
Product finishing	521 (125)	75 (18)	none	none	none

	Plants			
	7235	7238	7240	7244
Mix water	63 (15)	54 (13)	54 (13)	63 (15)
Central mixer and bucket washout	14 (3)	63 (15)	25 (6)	10 (2.5)
Curing	none*	none	none	none*
Product finishing	61 (15)	unknown	unknown	17 (4.1)
Other (truck washout)	none	none	5 (1)	none

*atmospheric curing

Waterborne wastes result from central mixer and transport bucket cleanout, form washoff, low pressure steam and spray curing, product finishing and miscellaneous equipment washoff. Pollutants in the waste water are suspended solids, high pH, COD, and oil and grease. Concrete batching produces cement dust, a solid waste which is usually collected in a baghouse and returned to the cement storage silo.

The waste concrete left over at the end of a working day creates a waterborne waste if washed out, or a solid waste, if scraped out and landfilled. Most plants landfill waste concrete.

Raw waste loads vary from day to day and depend on operating factors, number of "pours", number of central mixer and transport bucket washouts per day, duration of curing, number of products finished, and the amount of waste concrete. Estimated raw waste loads for selected plants are shown in kg/kkg of product (lb/1000 lb) together with pH values measured by EPA:

		Plant			
Source	Parameter	7200	7203	7206	7207
Central mixer and transport bucket washout	TSS	0.5	2.5	8	16
	pH	unknown	unknown	unknown	unknown
Curing	TSS	none	none	unknown	none
Product Finishing	TSS	none	0.005	none	unknown
	pH	unknown	11.7	unknown	unknown
Waste concrete	TSS	1.7	none	10	unknown

Source	Parameter	7230	7231	7232	7234
Central mixer and transport bucket washout	TSS pH	8 unknown	9 unknown	47 11.7	4 unknown
Curing	TSS	1.5	none	unknown	unknown
Product finishing	TSS pH	7 unknown	none N.A.	none N.A.	none N.A.
Waste concrete	TSS	none	1	5	5

*unknown
**not applicable

Source	Parameter	7235	7238	7244
Central mixer and transport bucket washout	TSS pH	36 unknown	0.011 unknown	1 unknown
Curing	TSS	none	none	none
Product finishing	TSS pH	13 unknown	unknown unknown	8 unknown
Waste concrete	TSS	35	0.012	8

N.A. not applicable

Waste solids from central mixer and transport bucket washout average 35 kg/cu m (100 lb/cu yd) of central mixer and transport bucket capacity for each washout. This value was used for the estimation of total suspended solids in the raw waste loads given above.

In most cases, the plants are unable to quantify raw waste loads. Efforts to obtain samples and determine meaningful raw waste data were unsuccessul. It is impracticable to process raw waste samples from the industry due to rapid solidification of the samples.

Plants 7200, 7203, 7207, 7231, 7235, and 7244 use atmospheric curing and have no curing wastes. Plant 7238 uses dry electric heat for curing.

READY-MIXED CONCRETE

The three types of ready-mixed concrete plants – permanent, portable and mobile – differ markedly in their waste water problems. Permanent ready-mixed concrete plants often have extensive waste water treatment facilities or room for such. Their plant yards may be paved. Portable ready-mixed plants are designed to be moved to locations that are near the sole, short-term user of their product (highway paving, building construction, dam construction, etc.). Their plant sites are generally leased, yards are not paved and space for waste water treatment is limited. Strict quality control requirements are placed on concrete used for paving, thus more waste concrete may be generated. Mix ratios are not changed often, therefore, there are fewer truck washout operations. Mobile concrete plants use trucks capable of measuring and mixing aggregate, cement and water at the job site. Truck washout is not usually done at the plant site. Mobile plants represent a small part of the total volume and most of their sales are to private individuals for small jobs such as sidewalks and patios.

Major sources of waste water in the ready-mixed concrete manufacturing are truck washout and washoff and central mixer washout.

PERMANENT READY-MIXED CONCRETE PLANTS

Ready-mixed concrete is manufactured by one of three methods: centrally-mixed concrete made in a stationary mixer and is delivered either in a truck agitator, a truck mixer operating at agitating speed, or a special non-agitating truck; shrink-mixed concrete mixed partially in a stationary central mixer and completed in a truck mixer; and completely truck-mixed concrete.

At a permanent ready-mixed concrete plant, the raw materials – cement, fine and coarse aggregate, mix water and special admixtures – are weighed or metered into either a central mixer and discharged into a mixer truck, or dry-batched directly into a ready-mixed truck, which serves as the mixer. The unhardened concrete is then delivered to the job site to be poured. Afterward, the mixer truck returns to the batching plant for another load of concrete. If the mix recipe is different, the truck is washed out prior to

receiving a fresh load. A process flow diagram is shown in Figure 7.

Annual production of ready-mixed concrete for the 437 plants contacted or visited ranges from 1,530 to 230,000 cu m (2,000 to 300,000 cu yd). Approximately 25 percent of the plants use central mixers.

Process water consists of mix water, central mixer washout, and mixer truck washout and washoff. There is also miscellaneous process water used for yard dust control, aggregate moisture control, chute rinse-off and equipment clean-up which, in most plants becomes yard runoff. Non-process water includes boiler blowdown and non-contact cooling of bearings and compressors.

Water use varies from day to day depending on such operating factors as number of mixer trucks operating, number of truck and central mixer washout and washoffs, and amounts of other miscellaneous water uses. Because of these variables, hydraulic loads at those plants contacted have a wide range of liters/cu m of product (gallons/cu yd). The amount of water used for mixing concrete ranges from 129 to 188 liters/cu m of product (26 to 38 gallons/cu yd). The plant-by-plant breakdown of process hydraulic loads is given below. One-fourth of the plants contacted reuse mixer truck washout water for the same purpose. In addition, seven plants studied reuse clarified mixer truck washout water for a percentage of mix water make-up. Some plants with mechanical aggregate separators use additional water for aggregate separation. This water use is included in the mixer truck washout in the following table.

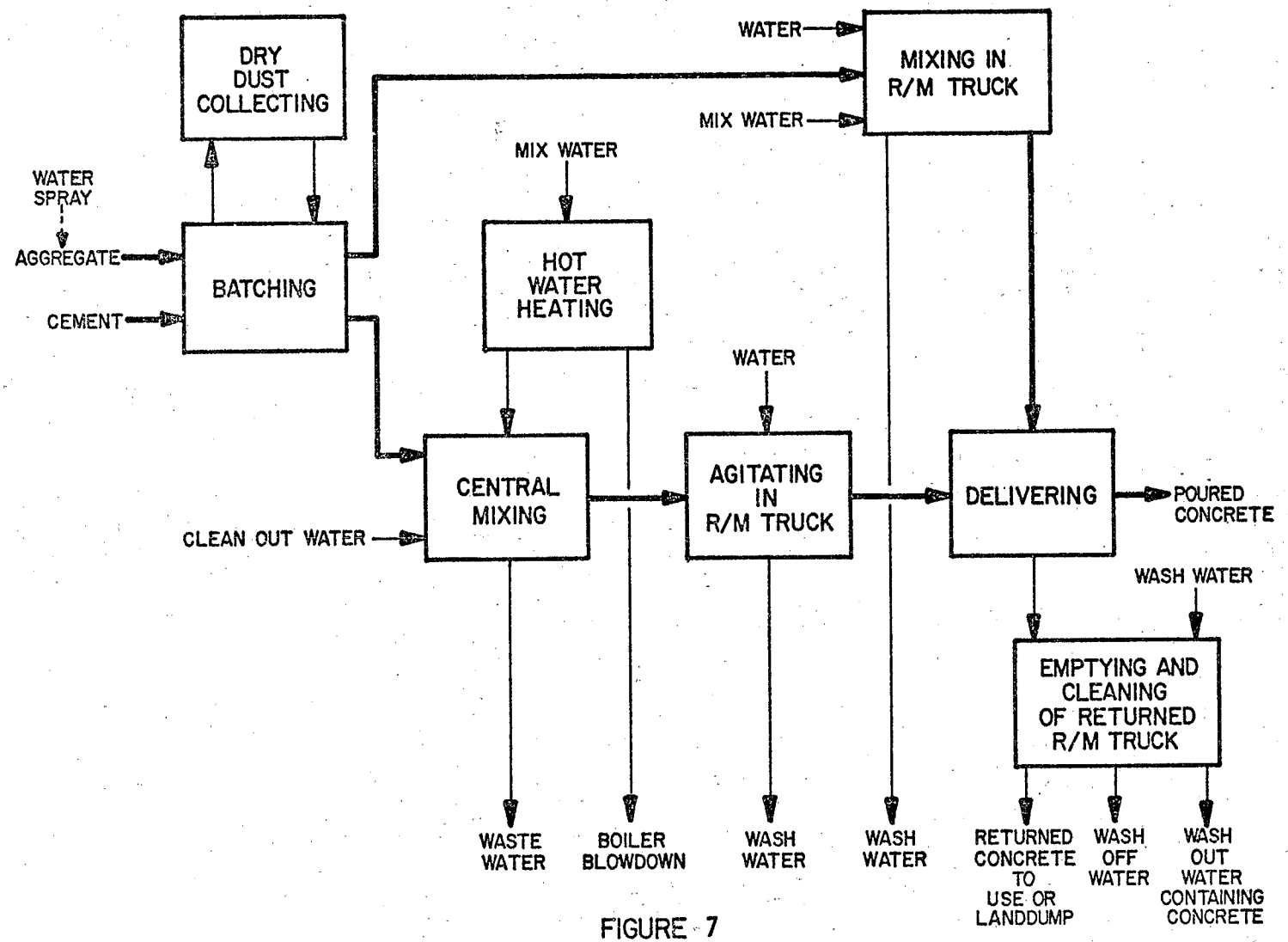

FIGURE 7

PRODUCTION OF READY-MIXED CONCRETE IN PERMANENT OR PORTABLE PLANTS

Process Hydraulic Loads for Ready-Mixed Concrete (Permanent), liters/cu m (gal/cu yd)

Plant	Mix Water	Truck Washout	Truck Washoff	Central Mixer Washout	Miscellaneous
7305	139 (28)	99 (20)	15 (3)	none	15 (3)
7363 *	139 (28)	25 (5)	15 (3)	2 (0.4)	unknown
7365	139 (28)	15 (3)	5 (1)	none	unknown
7385	149 (30)	50 (10)	2 (0.4)	3 (0.6)	248 (50)
7441	149 (30)	89 (18)	20 (4)	10 (2)	unknown
7451	173 (35)	149 (30)	25 (5)	none	unknown
7452	173 (35)	124 (25)	25 (5)	none	unknown
7487 *	129 (26)	50 (10)	15 (3)	none	unknown
7542	168 (34)	35 (7)	64 (13)	none	unknown
7543	168 (34)	25 (5)	64 (13)	none	25 (5)
7544	168 (34)	25 (5)	69 (14)	none	20 (4)
7545	168 (34)	20 (4)	54 (11)	5 (1)	129 (26)
7699	188 (38)	25 (5)	1 (0.2)	none	15 (3)
7729 *	139 (28)	282 (57)	35 (7)	none	unknown
7731	139 (28)	84 (17)	10 (2)	none	unknown
7732 *	139 (28)	317 (64)	40 (8)	none	unknown
7736 *	144 (29)	45 (9)	15 (3)	none	unknown
7750	139 (28)	74 (15)	20 (4)	none	unknown
7755	149 (30)	64 (13)	5 (1)	5 (1)	unknown
7757 *	149 (30)	139 (28)	10 (2)	none	unknown

* These plants reuse clarified mixer truck washout water for a percentage of mix water make-up.

The raw wastes for all plants consist of solid wastes from concrete batching and waterborne solids from clean-up of mixer trucks and central mixers. Concrete batching wastes include cement dust and aggregate fines which are usually collected in a baghouse and recycled to the storage silo.

Waste solids from washout of the central mixer and mixer trucks average 59 kg/cu m (100 lbs/cu yd) of central mixer and mixer truck capacity for each washout. Average mixer truck volume is 6.9 cu m (9 cu yd); average central mixer volume is 3.8 cu m (5 cu yd).

Excess concrete is returned to the plant in the mixer truck either to be incorporated in the following load or discharged from the truck as waste. This returned concrete may generate a waterborne waste if discharged to the waste water treatment system or a solid waste if landfilled. At some plants, returned concrete is molded into useful items such as splash blocks or patio blocks.

Mix water spillage, mixer truck chute rinse-off and rainfall contribute to yard runoff. The raw waste loads vary from day to day depending on operational factors such as number of trucks operating, number of washouts and washoffs per truck, and the amount of returned concrete. Most of those raw wastes are usually generated over a short period of time near the end of the working day. Consequently, large amounts of waste require treatment or temporary storage during these times.

It was found to be impracticable to analyze raw waste samples from the industry due to rapid solidification of collected samples.

The plant-supplied pH data obtained for raw waste streams was limited to measurements from two truck washout streams. At plant 7363 the pH of this stream was 12.3 while at plant 7365 it was 12.5. Yard runoff at plant 7385 was reported to have a pH of 11.2.

PORTABLE READY-MIXED CONCRETE PLANTS

Portable ready-mixed concrete plants use the same manufacturing process as permanent plants with the following exceptions:

(1) Mixing is predominantly done in central mixers (95 per cent of those contacted) rather than in truck mixers.
(2) Only 29 percent of the plants contacted wash off mixer trucks on a daily schedule.
(3) Mixer trucks make more trips in a day due to proximity of the plant to the job site.

Annual production of ready-mixed concrete for the 21 portable plants contacted ranges from 13,000 to 153,000 cu m (17,000 to 200,000 cu yd).

Process water is primarily used in mixing, central mixer washout, and mixer truck washout and washoff. Miscellaneous process water is used for mixer truck chute rinse-off, yard dust control, and for spraying stockpiles to moisten the exterior of the pile to keep aggregate at the "saturated, surface-dry (s.s.d.) condition". Non-process water is used for boiler feed and non-contact cooling of bearings and compressors. Water use varies from day to day and depends on operational factors such as number of mixer trucks operating, and the number of mixer truck washouts and washoffs.

Water use at portable plants is similar to that described for permanent plants. The amount of water used for mixing varies depending on the fineness of aggregates, desired slump of the concrete, amount of cement in the mix and amount of entrained air. Average amounts of mix water used at the plants range from 124 to 198 liters/cu m (25 to 40 gal/cu yd). The process water use at several plants is shown as follows:

Process Water Use for Portable Ready-Mixed Concrete Plants, liters/cu m (gal/cu yd)

Plant	Mix	Truck Washout	Truck Washoff	Central Mixer Washout
7362	198 (40)	none	8 (1.6)	none
7601	124 (25)	15 (3.0)	none	1.5 (0.3)
7602	149 (30)	14 (2.8)	none	7.4 (1.5)
7603	149 (30)	25 (5.0)	none	12.4 (2.5)
7604	173 (35)	7 (1.4)	none	1.8 (0.4)
7609	129 (26)	54 (10.8)	3 (0.6)	7.0 (1.4)
7627 *	124 (25)	2 (0.4)	none	3.0 (0.6)
7633	173 (35)	30 (6.0)	none	1.5 (0.3)
7641	unknown	99 (19.8)	12 (2.4)	25 (5.0)
7649	149 (30)	14 (2.8)	0.8 (0.2)	2.0 (0.4)
7691	124 (25)	2 (0.4)	none	0.4 (0.1)
7706 *	149 (30)	50 (10.0)	none	4.0 (0.8)
7707	124 (25)	89 (17.8)	9 (1.8)	9.0 (1.8)
7753	134 (27)	36 (7.2)	18 (3.6)	6.0 (1.2)
7758	unknown	none	none	none

* average of four plants

Recycle of mixer truck washout water is a fairly common practice at portable ready-mixed plants. Reuse of clarified mixer truck washout water as part of mix water make-up is not practiced because of strict standards for mix water quality adopted by regulatory agencies and industry technical committees.

Raw wastes result from concrete batching and mixer washout and truck washoff. Cement dust from concrete batching is usually collected in baghouses located on the storage silos. Collected dust is usually recycled to the storage silos.

Pollutants include suspended solids, pH and COD from central mixer washout and mixer truck washout and washoff.

Returned concrete at portable plants usually is due to quality control rejection at the job site. The waste concrete is either landfilled or converted to a waterborne waste if discharged to a treatment system. Most portable plants do not make by-products from their returned concrete. Raw wastes from miscellaneous sources come from mix water spillage and mixer truck chute rinse-off. Raw waste loads vary from day to day depending on operational factors such as number of operating mixer trucks, number of mixer truck washouts and washoffs and the amount of returned concrete.

MOBILE READY-MIXED CONCRETE PLANTS

Mobile ready-mixed concrete trucks, "concrete-mobiles", are miniature batch plants on wheels. Aggregate, cement, water and admixtures are loaded in separate compartments on the concrete-mobile at the batch building. The concrete-mobile then travels to the job site, where the ingredients are mixed together in the concrete-mobile mixer as they are dispensed. In this manner, only the amount of concrete needed for the job is mixed. Normally, no returned or waste concrete results. Average capacity of a concrete-mobile is 5.3 cu m (7 cu yd).

There are approximately 1,800 mobile ready-mixed plants in the U.S. ranging in annual production from 2,865 to 57,300 cu m (3,750 to 75,000 cu yd). Most firms use the concrete-mobile for small, homeowner type jobs, where rapid mixing and dispensing of concrete is not critical. Approximately 30 permanent ready-mixed concrete firms have added a concrete-mobile to their fleet for these type jobs. Figure 8 illustrates the production of mobile ready-mixed concrete.

Process water is primarily used in mixing, concrete-mobile mixer washout, and concrete-mobile washoff. Miscellaneous process water is used for yard dust control and for moisture control of aggregate stockpiles. Non-process water uses include non-contact cooling of bearings and compressors. Water use varies from day to day and depends on operational factors such as number of operating concrete-mobiles, the number of mixer washouts and the number of washoffs. The amount of water used for mixing varies depending on the fineness of aggregates, desired slump of the concrete, amount of cement in the mix and amount of entrained air. The process water use at two plants is shown as follows:

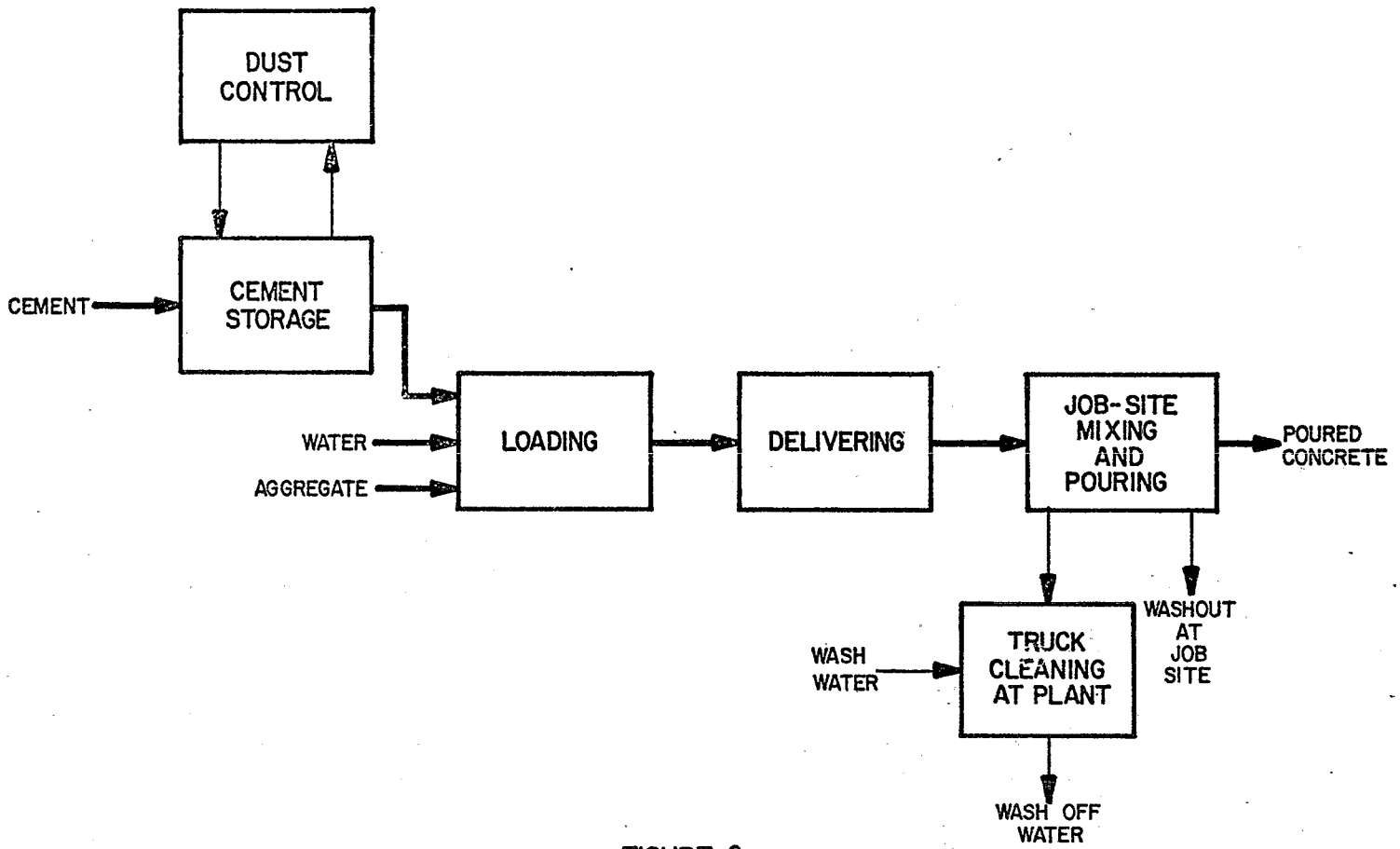

FIGURE 8
PRODUCTION OF READY-MIXED CONCRETE AT MOBILE PLANTS

Process Water Use for Mobile Ready-Mixed Concrete Plants, liters/cu m (gal/cu yd)

Plant	Mix	Mixer Washout	Concrete-Mobile Washoff
7759	139 (28)	7.4 (1.5)	3.5 (0.7)
7760	139 (28)	5.0 (1.0)	5.0 (1.0)

Raw wastes result from loading the ingredients into the concrete-mobile, mixer washout and truck washoff. Cement dust from loading is usually collected in baghouses located on the storage silos. Collected dust is usually recycled to the storage silos.

Waterborne pollutants include suspended solids, pH and COD resulting from concrete-mobile mixer washout and concrete-mobile washoff.

SECTION V

SELECTION OF POLLUTANT PARAMETERS

Total suspended solids, oil and grease and pH were found to be the major waste water pollutant parameters. The rationale for inclusion of these parameters and exclusion of other parameters is discussed in this section.

Oil and Grease

Oil and grease may be present in the waste waters from concrete block and brick, concrete products (NEC) and ready-mixed concrete production. Based on the data available, concentrations of oil and grease vary from 0.0 to 376 mg/l.

Because of widespread use, oil and grease occur often in waste water streams. These oily wastes may be classified as follows:

1. Light Hydrocarbons - These include light fuels such as gasoline, kerosene, and jet fuel, and miscellaneous solvents used for industrial processing, degreasing, or cleaning purposes. The presence of these light hydrocarbons may make the removal of other heavier oily wastes more difficult.

2. Heavy Hydrocarbons, Fuels, and Tars - These include the crude oils, diesel oils, #6 fuel oil, residual oils, slop oils, and in some cases, asphalt and road tar.

3. Lubricants and Cutting Fluids - These generally fall into two classes: non-emulsifiable oils such as lubricating oils and greases and emulsifiable oils such as water soluble oils, rolling oils, cutting oils, and drawing compounds. Emulsifiable oils may contain fat soap or various other additives.

4. Vegetable and animal fats and Oils - These originate primarily from processing of foods and natural products.

These compounds can settle or float and may exist as solids or liquids depending upon factors such as method

of use, production process, and temperature of waste water.

Oils and grease even in small quantities cause troublesome taste and odor problems. Scum lines from these agents are produced on water treatment basin walls and other containers. Fish and water fowl are adversely affected by oils in their habitat. Oil emulsions may adhere to the gills of fish causing suffocation, and the flesh of fish is tainted when microorganisms that were exposed to waste oil are eaten. Deposition of oil in the bottom sediments of water can serve to inhibit normal benthic growth. Oil and grease exhibit an oxygen demand.

Levels of oil and grease which are toxic to aquatic organisms vary greatly, depending on the type and the species susceptibility. However, it has been reported that crude oil in concentrations as low as 0.3 mg/l is extremely toxic to fresh-water fish. It has been recommended that public water supply sources be essentially free from oil and grease.

Oil and grease in quantities of 100 l/sq km (10 gallons/sq mile) show up as a sheen on the surface of a body of water. The presence of oil slicks prevent the full aesthetic enjoyment of water. The presence of oil in water can also increase the toxicity of other substances being discharged into the receiving bodies of water. Municipalities frequently limit the quantity of oil and grease that can be discharged to their waste water treatment systems by industry.

pH

Although not a specific pollutant, pH is related to the acidity or alkalinity of a waste water stream. It is not a linear or direct measure of either, however, it may properly be used as a surrogate to control both excess acidity and excess alkalinity in water. The term pH is used to describe the hydrogen ion - hydroxyl ion balance in water. Technically, pH is a function of the hydrogen ion concentration or activity present in a given solution. pH numbers are the negative logarithm of the hydrogen ion concentration. A pH of 7 generally indicates neutrality or a balance between free hydrogen and free hydroxyl ions. Solutions with a pH above 7 indicate that the solution is basic while a pH below 7 indicates that the solution is acidic.

Knowledge of the pH of water or waste water is useful in determining necessary measures for corrosion control, pollution control, and disinfection. Waters with a pH below 6.0 are corrosive to water works structures, distribution lines, and household plumbing fixtures and such corrosion can add constituents to drinking water such as iron, copper, zinc, cadmium, and lead. Low pH waters not only tend to dissolve metals from structures and fixtures but also tend to redissolve or leach metals from sludges and bottom sediments. The hydrogen ion concentration can affect the "taste" of the water and at a low pH, water tastes "sour".

Extreme values of pH or rapid pH changes can exert stress conditions or kill aquatic life outright. Even moderate changes from "acceptable" criteria limits of pH are deleterious to some species. The relative toxicity* to aquatic life of many materials is increased by changes in the water pH. For example, metalocyanide complexes can increase a thousand-fold in toxicity with a drop of 1.5 pH units. Similarly, the toxicity of ammonia is a function of pH. The bactericidal effect of chlorine in most cases is less as the pH increases, and it is economically advantageous to keep the pH close to 7. Based on the available data, the pH of waste waters from the concrete products industry varies from 5.7 to 12.5.

Total Suspended Solids

Suspended solids include both organic and inorganic materials. The inorganic compounds include sand, silt, and clay. The organic fraction includes such materials as grease, oil, tar, and animal and vegetable waste products. These solids may settle out rapidly and bottom deposits are often a mixture of both organic and inorganic solids. Solids may be suspended in water for a time, and then settle to the bed of the stream or lake. These solids discharged with man's wastes may be inert, slowly biodegradable materials, or rapidly decomposable substances. While in suspension, they increase the turbidity of the water, reduce light penetration and impair the photosynthetic activity of aquatic plants.

Suspended solids in water interfere with many industrial processes, cause foaming in boilers and incrustations on equipment exposed to such water, especially as the temperature rises. They are undesirable in process water

*The term toxic or toxicity is used herein in the normal scientific sense of the word and not as a specialized term referring to section 307(a) of P.L. 92-500.

used in the manufacture of steel, in the textile industry, in laundries, in dyeing, and in cooling systems.

Solids in suspension are aesthetically displeasing. When they settle to form sludge deposits on the stream or lake bed, they are often damaging to the life in water. Solids, when transformed to sludge deposits, may do a variety of damaging things, including blanketing the stream or lake bed and thereby destroying the living spaces for those benthic organisms that would otherwise occupy the habitat. When of an organic nature, solids use a portion or all of the dissolved oxygen available in the area. Organic materials also serve as a food source for sludgeworms and associated organisms.

Disregarding any toxic effect attributable to substances leached out by water, suspended solids may kill fish and shellfish by causing abrasive injuries and by clogging the gills and respiratory passages of various aquatic fauna. Indirectly, suspended solids are inimical to aquatic life because they screen out light, and they promote and maintain the development of noxious conditions through oxygen depletion. This results in the killing of fish and fish food organisms. Suspended solids also reduce the recreational value of the water. Based on the available data, suspended solids from the concrete products industry varies from 4 to 837 mg/l.

SIGNIFICANCE AND RATIONALE FOR REJECTION OF POLLUTION PARAMETERS

A number of pollution parameters other than those selected were considered, but had to be rejected for one or several of the following reasons:

(1) Not harmful when selected paramters are controlled
(2) Not present in significant quantities
(3) Control substitutes a more harmful pollutant
(4) Insufficient data available
(5) Indirectly controlled when selected parameters are controlled
(6) Not controllable

Dissolved Solids

Dissolved solids may be present in significant amounts in the waste water from this industry, but there is no treatment other than no discharge to practicably reduce them.

Temperature

Excess thermal load even with condensate from steam curing has not been and is not expected to be a significant problem in this industry. The holding time involved in the waste water treatment systems should be adequate to dissipate temperature increases.

Chemical Oxygen Demand (COD)

For the concrete products industry COD is chiefly attributable to chemicals which are measured by the oil and grease test i.e. form release oils. By controlling oil and grease adequate control of COD should result. Some admixtures may contribute to COD but not to oil and grease. The data available however is insufficient to indicate that specific control of COD is necessary because of admixtures.

SECTION VI

CONTROL AND TREATMENT TECHNOLOGY

Waste water from the concrete products industry may contain suspended solids and oil, and have a high pH. The general treatment practices are similar for all subcategories. Suspended solids are removed in settling basins, tanks or ponds; pH is adjusted with sulfuric acid; and oil is removed by skimming from pond or tank surfaces. Ready-mixed concrete differs from the rest of the industry in that the untreated waste water contains a significantly heavier load of suspended solids. Handling and disposal of the resulting solid wastes is a more severe problem. Oil and grease are not usually found in waste water from ready-mixed or block and brick plants, but have been found in the pipe and prestressed and precast concrete product subcategories.

Many concrete producing facilities are located in urban or suburban areas, where land may be scarce and expensive. Fortunately, the suspended solids generated settle rapidly so that tanks and small ponds may still be effective even when space is at a premium.

Waste water discharges from plants manufacturing concrete products are relatively small. The maximum reported values of waste water handled in these plants (but not necessarily discharged) are: ready-mixed concrete plants 568,000 liters/day (150,000 gallons/day); block and brick plants 60,000 liters/day (15,000 gallons/day); concrete pipe 400,000 liters/day (100,000 gallons/day); and prestressed and precast products 57,000 liters/day (14,000 gallons/day). Since some recycle is practiced and the use of evaporation/percolation ponds is wide-spread, discharge volumes are often significantly less than total waste water volumes reported.

Based on the plants surveyed by EPA, an estimated 40 per cent of the concrete products plants usually have no discharge because of evaporation/percolation ponds, recycle, on-site ground seepage, or no generation of waste water:

Treatment/Disposal Technology	Percent of Total Plants
Recycle ponds, evap/percolating ponds plus ground seepage	30
Recycle from clarifiers (ready-mixed only)	7
No waste water	3

Plants which normally discharge waste water do so by disposal either to surface waters or to sewers. Of the 30 plants surveyed which discharge, 17 discharge to surface water and 13 to storm sewers. Waste water is generally discharged after treatment by the concrete block and brick, concrete pipe, and precast and prestressed concrete products subcategories. Many ready-mixed concrete plants practice some recycle and treatment.

Treatment and control practices for waste water of the concrete products industry are discussed below in three areas:

1) separation and control of waste water

2) treatment technology

3) monitoring

The treatment technologies currently used in this industry for waste water consist of settling of suspended solids, neutralization of high pH discharges, and separation of oil and grease.

The aggregate components of concrete wastes settle rapidly. The cement component also settles fairly rapidly in an undisturbed settling environment. Many treatment systems are not designed to provide this quiescent settling and cement fines are often carried over in the discharge. A detailed discussion on cement settling rates is given later in this section.

The settled solids usually must be removed from the settling pond or tank. Handling and disposal methods include:

(1) Pumping the cement slurry into tank trucks and hauling to a landfill

(2) Removing the settled sludge from tanks or ponds with front-end loaders, backhoes, or cranes, and dumping nearby to dry prior to a second loading and hauling operation of dried solids for land disposal

(3) Filling of pits with the settled solids, followed by pit abandonment

(4) Separation of coarse aggregate by means of clarification equipment with fine aggregate and cement components sent for land disposal

(5) Separation of fine aggregate and coarse aggregate components by means of clarification equipment or sloped slab basin. Aggregate may be used or sold; cement sent for land disposal

(6) Separation of fine aggregate, coarse aggregate and cement followed by reuse of all components

Except for the last, all these methods involve major solid waste disposal on land.

The clarified waste water contains sufficient lime to raise the pH to 11 to 12. Acid treatment is required to adjust the pH to between 6 and 9. This acid treatment is practiced by only one or two per cent of the plants studied.

There is potential for reuse of recovered aggregate, cement and clarified water. Reuse is limited by regulatory restrictions and quality uncertainties of concrete produced with reused materials. Most specifications for concrete call for potable water to be used in the mix. This prevents the use of clarified recycle water for this portion of the business. However, several companies were found that use treated waste water where possible with no discernible difference in physical properties of the resultant concrete. Once the coarse and fine aggregate have been separated, the cement can be retained in suspension and used in preparation of new batches. At least one company has successfully followed this approach.

Oil wastes are not usually present in the manufacture of ready-mixed concrete. However, the manufacture of cast concrete products involves the use of oil as a form release agent. Oil removal from waste water is not generally practiced

Waste water streams were found to contain COD up to 200 mg/liter. The amounts do not appear to correlate consistently with any process variable. It is likely that COD arises partially from the use of air entrainment agents in concrete production. These agents are generally organic materials and their amount and composition vary according to individual plant formulations. Treatment of COD not associated with oil and grease is not practiced in the concrete products industry.

WASTEWATER TREATMENT FOR SPECIFIC CONCRETE PRODUCTS

Although all concrete plants use the same basic waste water treatment technologies, there are significant differences among the different subcategories as to amount of waste waters treated.

CONCRETE BLOCK AND BRICK

The concrete block and brick manufacturing consists of plants utilizing autoclave curing and low pressure steam curing. Below are summarized the treatments used by fourteen plants of either type:

Plant	Curing Process	Treatment Used
7100	high pressure autoclave	no treatment
7101	high pressure autoclave	no treatment
7102	low pressure steam	evaporation/percolation pond (no discharge)
7103	low pressure steam	evaporation/percolation pond (no discharge)
7104	low pressure steam	evaporation/percolation pond (no discharge)
7105	high pressure autoclave	settling pond (discharge to storm sewer)
7106	low pressure steam	evaporation/percolation
7107	high pressure autoclave	no treatment
7108	low pressure steam	evaporation/percolation
7109	low pressure steam	no treatment
7110	low pressure steam	evaporation/percolation
7113	high pressure autoclave	settling basin and pH control

Waste water results from steam condensate and miscellaneous washdowns. Waste water quantities are small enough at most plants so that evaporation or percolation on plant property is feasible. Waste water quantities vary with production and duration of curing. For example, steam condensate is generated only during the 8 to 10 hour curing cycle.

Based upon NPDES Application data (1971), some characteristics of the effluent stream from plants that discharge are:

	Plant 7109	Plant 7111*	Plant 7112
Flow, liters/kkg	8.9	142	43
pH	11.1	9.8	11.1
Parameter Concentration, mg/liter			
TSS	64	10	5
COD	26	56	570
Oil and Grease	none	35	unknown
Parameter Amounts, kg/kkg			
TSS	0.0005	0.0014	0.0002
COD	0.0002	0.0080	0.025
Oil and Grease	none	0.005	unknown

*Plant 7111 manufactures both concrete block and concrete pipe.

Waste water results from autoclave blowdown condensate and a periodic discharge (purge) of the water used in the convection process of steam generation at plants 7100 and 7101. Blowdown condensate results when the autoclave is vented at the end of a curing cycle (8-10 hours). For this reason, blowdown condensate is only produced approximately 1-2 hours/day at the plants visited. The discharge of autoclave purge at plant 7100 occurs once a week resulting in an intermittent waste water flow. Plant 7101 discharges autoclave purge after each curing cycle. Plant 7100 settles out suspended solids from autoclave blowdown condensate and autoclave purge in an earthen settling pond. Plant 7105 removes suspended solids from autoclave blowdown condensate in a concrete settling basin. Plant 7107 treats suspended solids in an evaporation/percolation pond. Plant 7101 is installing a waste water treatment system to settle suspended solids from blowdown condensate and autoclave purge using a settling basin. The clarified decant may be used for aggregate stock pile dust control, thereby eliminating discharge.

No additional waste water treatment methods were found in the U.S. plants contacted, however, a Canadian concrete block plant (plant 7113) visited had an automatically

controlled acid-neutralization system. This installation consisted of a 500 gallon acid-proof tank, with a pH sensor that actuated a solenoid valve controlling the addition of hydrochloric acid. The pH control was set to maintain a pH level of 9.0-9.5, but effluent analyses were not available.

Plants 7100 and 7101 currently discharge their treated effluent to a waterway, plants 7105 and 7113 to a municipal storm sewer, and plant 7107 to an evaporation/percolation pond. Constituents of the treated effluents from plants 7100 and 7105 are:

Plant	Flow, l/kkg (gal/ton)	Constituents	Concentration mg/liter	Amount, kg/kkg (lb/1000 lb)
7100	50 (12)	TSS	20	0.001
		pH	11.3	----
		COD	48	0.0024
		Oil and grease	2	0.0001
7105	214 (51)*	TSS	54	0.01
		pH	11.5	----
		COD	unknown	unknown
		Oil and grease	unknown	unknown

*Plant-supplied datum

Low pressure steam curing processes as practiced by plants 7102, 7103, and 7104 have such small waste water flow that they can often dispose of the water in on-site evaporation/percolation ponds without treatment. When discharge is necessary, treatment would be similar to that for the high pressure autoclave system-settling of suspended solids in a small pit, sump or tank and adjustment of pH to 6 to 9.

CONCRETE PIPE

Waste water comes from central mixer and transport bucket washout, spincasting, low pressure steam condensate, spray curing, form washoff, prewetting of imbedded pressure pipe and miscellaneous sources such as hydrostatic testing. Central mixer and transport bucket washout are approximately 25 per cent of the waste water volume.

Waste water volumes generated by 3 plants sampled range from 28 to 1,000 liters/kkg of product (6.7-240 gal/ton). Typical waste water treatment involves only the removal of suspended solids. All of the plants studied use settling basins or ponds to remove suspended solids from central

mixer and transport bucket washout and spincast waste water. Plants 7224 and 7247 treat low pressure steam condensate, while plants 7201, 7205, 7229, 7233, 7239, 7241, and 7248 do not. Plant 7224 collects spray curing waste water, settles out suspended solids, and reuses the clarified water for spray curing. Plant 7247, a pressure pipe plant, combines all waste water streams, settles out suspended solids, removes oil and grease by skimming and sorbant booms, and adjusts the pH of the clarified decant with sulfuric acid.

Table 7 summarizes that waste water volumes generated and treatment utilized in several pipe plants. Those plants with untreated or partially treated waste water may need to settle solids in small pits, tanks or ponds, to adjust pH with acid addition, and to skim off floating oil with belt units or small API-type separators or to adsorb it in straw or other adsorbents.

Information on discharged waste water at concrete pipe plants based upon EPA measurements is given below.

	Plants		
	7201	7224	7247
Flow, liters/kkg (gal/ton)	28 (7)	161 (39)	1,000 (240)
pH	11.5	9.0	7.4
Parameter amounts, kg/kkg (lb/1000 lb)			
TSS	0.002	0.13	0.006
COD	0.003	0.08	0.16
Oil and grease	0.01	0.04	0.003
Parameter concentrations, mg/liter			
TSS	70	837	6
COD	115	466	161
Oil and grease	376	264	2.9

Permit application (NPDES) data for additional concrete pipe plants were reviewed. Usable discharge data were obtained from six plants. These are summarized:

TABLE 7 . TOTAL WASTEWATER GENERATED FROM CONCRETE PIPE PLANTS

Plant Code	Treatment	Wastewater Origin: Central Mixer Washout	Form Washoff	Steam Condensate	Transport Bucket Washout	Cen-Vi-Ro Spinoff	Other	Total Wastewater Quantity liters/day
7201	settling pond		X	X				760
7205	e/p			X				8,370
7212	none	X			X			760
7223	settling pond	X			X			3,200
7224	settling pond	X		X	X		X	66,600
7229	e/p	X		X	X			unknown
7233	e/p	X	X					320
7239	none		X	X				184
7241	none	X	X					320
7247	settling pond; oil removal; pH adjust	X		X	X	X	X	302,800
7248	settling pond	X		X	X			75,700

e/p - evaporation/percolation.

	7224	7247	7249	7250	7251	7252
Flow, liters/kkg (gal/ton)	1,070 (256)	743 (178)	1,202 (288)	235 (56)	278 (67)	329 (79)
pH	11	7.5	9.5	8.0	9.6	8.8
Parameter amounts, kg/kkg (lb/1000 lb)						
TSS	0.35	0.013	0.12	0.002	0.009	0.03
COD	0.1	not measured	0.12	0.005	0.004	0.013
Oil and grease	not given	0.004	0.03	0.003	0.017	0.004
Parameter concentrations, mg/liter						
TSS	327	17	100	8	32	92
COD	93	not measured	103	20	15	39
Oil and grease	not given	5.5	26	11	64	11

Figures 9 and 10 illustrate typical belt and API-type oil-skimming units. For the usual waste water volumes from pipe operations, the belt-type skimmer would be more appropriate. Adsorbent materials can also be used conveniently to remove small amounts of oil.

PRESTRESSED AND PRECAST CONCRETE PRODUCTS

Waste water results from central mixer and transport bucket washout; form washoff; curing (low pressure steam condensate and runoff from spray curing); product finishing; and miscellaneous contributions such as waste water from equipment clean-up, and any spills that may occur. Central mixer and transport bucket washout constitute approximately 50 per cent of the daily waste water volume. Mix water is incorporated into the concrete and does not become a source of waste water. Form washoff may be used but was not observed. Total reported daily waste water volumes generated by the plants contacted ranges from 7 to 608 liters/kkg (2 to 145 gallons/ton) as shown in Figure 11.

Waste water treatment is principally the removal of suspended solids by sedimentation prior to reuse or discharge. Plant 7238 adjusts pH as part of its treatment method. Approximately 30 per cent of the plants contacted have no waste water treatment. Suspended solids are removed either by settling in ponds or basins or by mechanical clarification. At most plants the removed solids are landfilled. Where pH is generally adjusted, it is done with sulfuric acid in a holding or mixing tank.

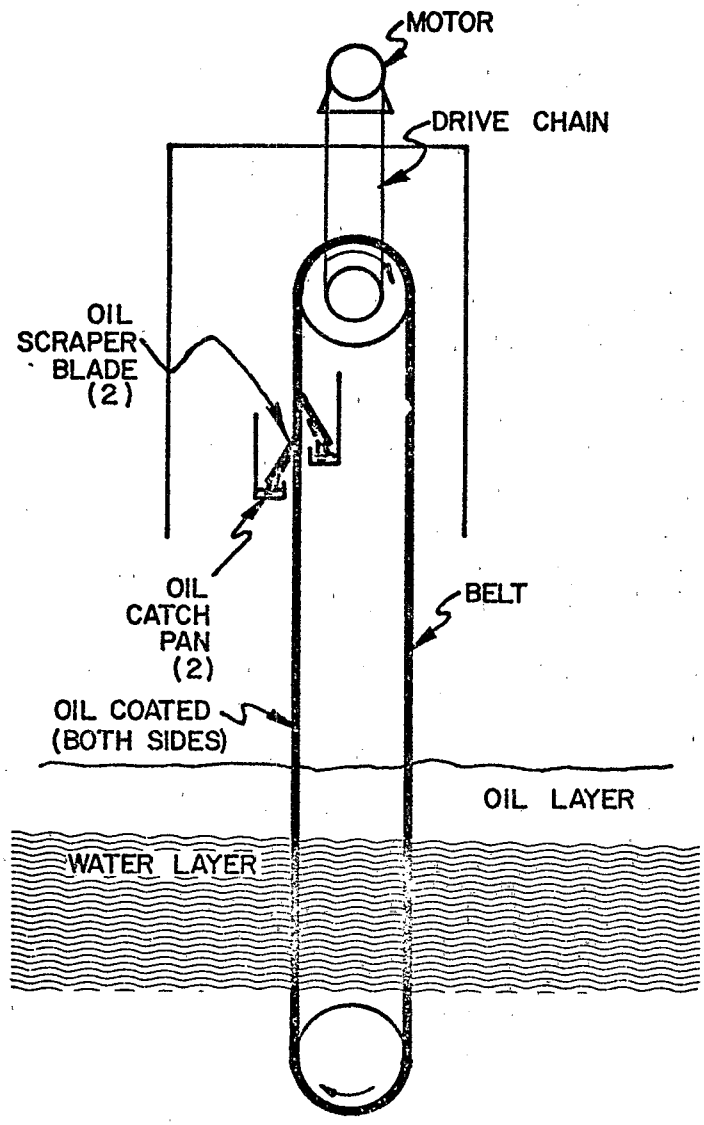

FIGURE 9
BELT OIL SKIMMER

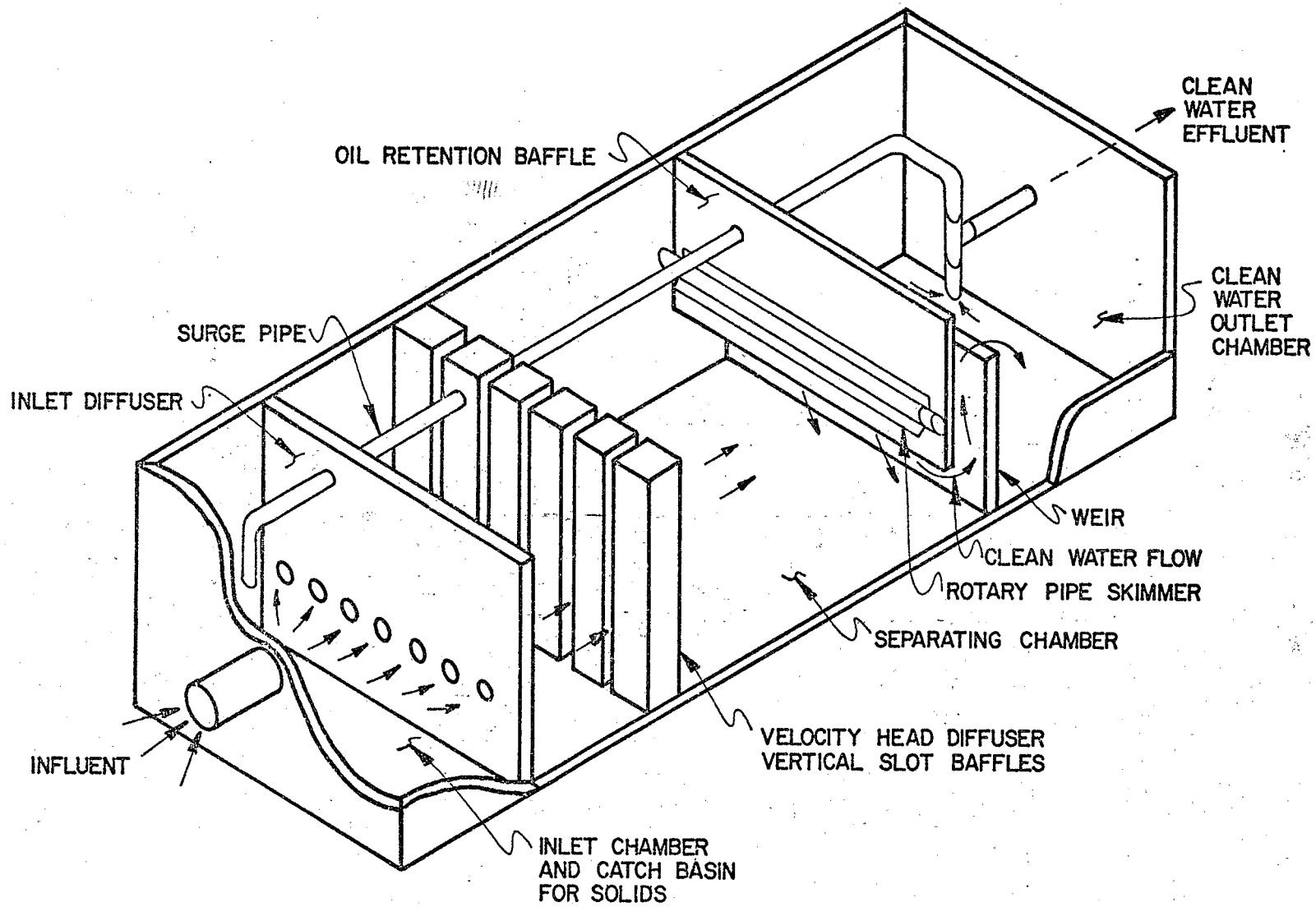

FIGURE 10
API-TYPE OIL SKIMMER

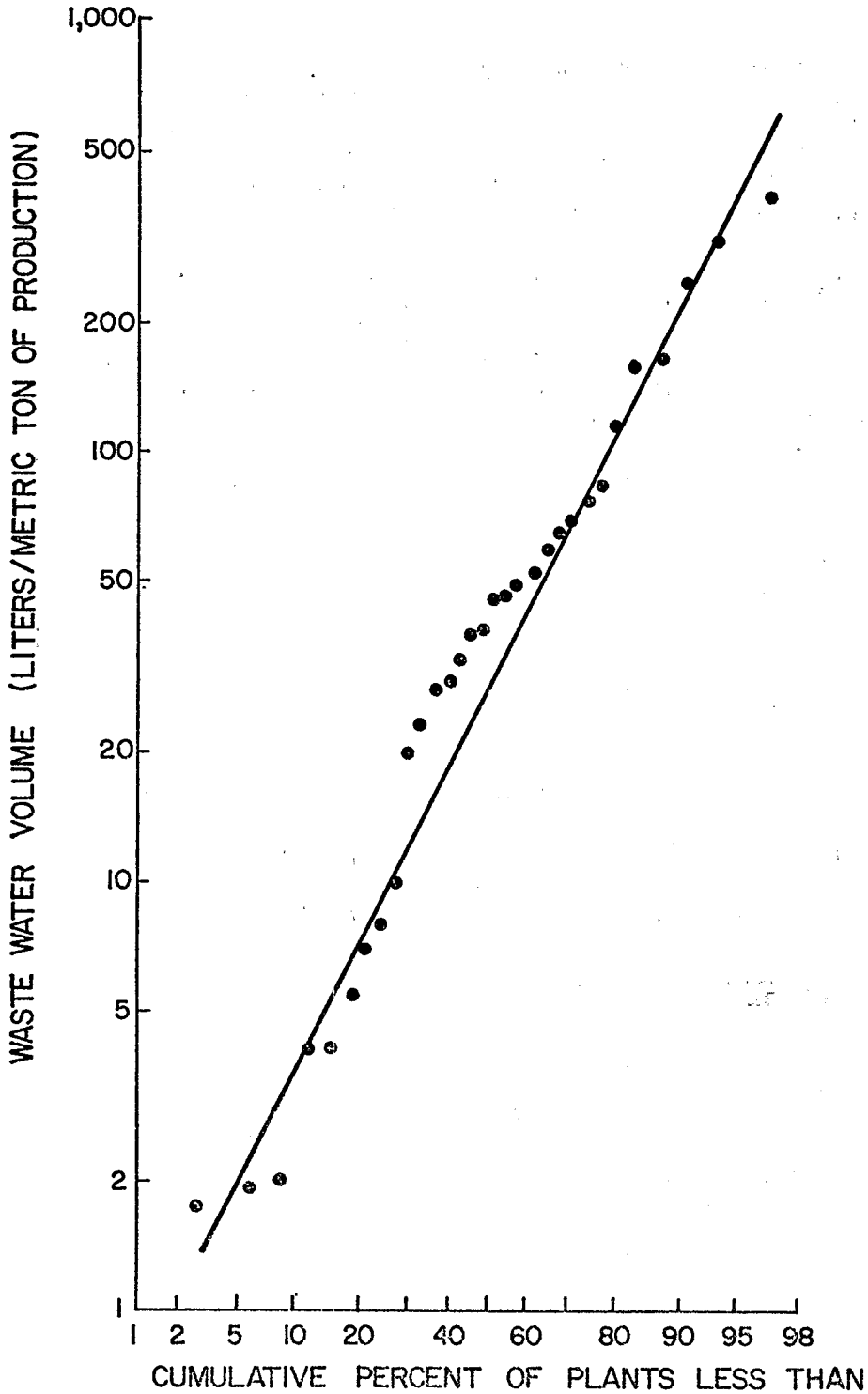

FIGURE 11

DISTRIBUTION OF WASTEWATER GENERATED AT PRECAST AND PRESTRESSED CONCRETE PRODUCTS PLANTS

(DATA FROM 32 PLANTS)

Waste water from prestressed and precast concrete plants is usually treated in a similar manner to that of the pipe subcategory. Ponds or basins are used for removing suspended solids in this subcategory. One plant studied controls pH by addition of acid. Amounts of waste water generated and types of treatment are summarized in Table 8.

Effluent information on discharged waste water at plants studied follows. Plant 7238 verification data was obtained during startup and is possibly atypical. The oil found by EPA measurement in this plant's effluent is used for mosquito control not from the manufacture of precast and prestressed cement products.

	Plants			
	7203	7207	7230	7232
Flow, liter/kkg (gal/ton)	24 (6)	87 (21)	139 (33)	8.7 (2.1)
pH	11.5	11.4	10.9	11.7
Parameter amounts kg/kkg (lb/1000 lb)				
TSS	0.002	0.02	0.07	0.003
COD	0.0009	0.0014	0.05	0.009
Oil and grease	0.00002	0.0003	0.0002	7×10^{-7}
Parameter Concentration mg/liter				
TSS	97	230	488	353
COD	57	16	335	101
Oil and grease	0.8	4	1.4	0.08

TABLE 8 . TOTAL WASTEWATER GENERATED FROM PRESTRESSED AND PRECASTE CONCRETE PLANTS

Plant Code	Treatment	Wastewater Origin: Central Mixer Washout	Steam Condensate	Form Washoff	Transport Bucket Washout	Product Washdown	Other	Total Quantity liters/day
7200	settling pond	X						190
7203	settling pond	X				X		2,080
7204	e/p	X	X		X			8,900
7206	settling pond	X	X					3,800
7207	settling pond	X				X		14,600
7208	none	X			X			80
7209	none							0
7210	not given	X			X			1,900
7211	none	X				X		1,200
7213	settling pond	X			X			1,140
7214	none	X				X		5,300
7215	none	X			X			9,500
7216	e/p	X			X			15,100
7217	none	X			X	X		400
7218	none	X			X			49,200
7219	settling pond	X			X			11,360
7220	settling pond	X			X			9,460
7221	settling pond; e/p						X	5,690
7222	settling pond	X			X			3,800
7225	none	X			X			11,400
7226	settling pond; e/p	X	X		X			490
7228	settling pond	X			X	X		7,600
7230	settling pond	X				X	X	13,600
7231	e/p	X						80
7232	e/p	X						3,800
7234	e/p	X	X					17,000
7235	settling pond; e/p	X				X		12,100
7236	e/p	X			X			27,400
7238	mechanical clarification; settling pond; pH adjustment	X						56,800
7240	none	X					X	8,000
7242	settling pond	X			X		X	3,800
7243	none	X			X			1,500
7244	e/p	X			X		X	6,100
7245	none	X			X			29,700

e/p - evaporation/percolation.

	Plant		
	7238	7238*	7253**
Flow, liter/kkg (gal/ton)	201 (48)	249 (60)	371 (89)
pH	9.8	7.5	9.1
Parameter amounts kg/kkg (lb/1000 lb)			
TSS	0.002	0.013	0.098
COD	0.003	unknown	0.046
Oil and grease	0.013	unknown	0.015
Parameter concentration mg/liter			
TSS	12	88	264
COD	14	unknown	125
Oil and grease	64	unknown	41

*Plant supplied information
**Permit application (NPDES) data

READY-MIXED CONCRETE

Permanent Plants

Waste water comes from mixer truck washout and washoff, central mixer washout, and miscellaneous sources such as yard dust control, mixer truck chute rinse-off, and equipment clean-up. Mixer truck washout and washoff constitute approximately 80 percent of the waste water volume. Mix water is incorporated into the concrete and does not become a source of waste water.

The plants contacted reported waste water volumes generated ranging from 20 to 287 liters/cu m (4 to 57 gallons/cu yd), with 4 of the plants having more than 248 liters/cu m (50 gallons/cu yd) of waste water. Only a small portion of the waste water generated is normally discharged at these plants as shown in Figures 12, 13 and 14.

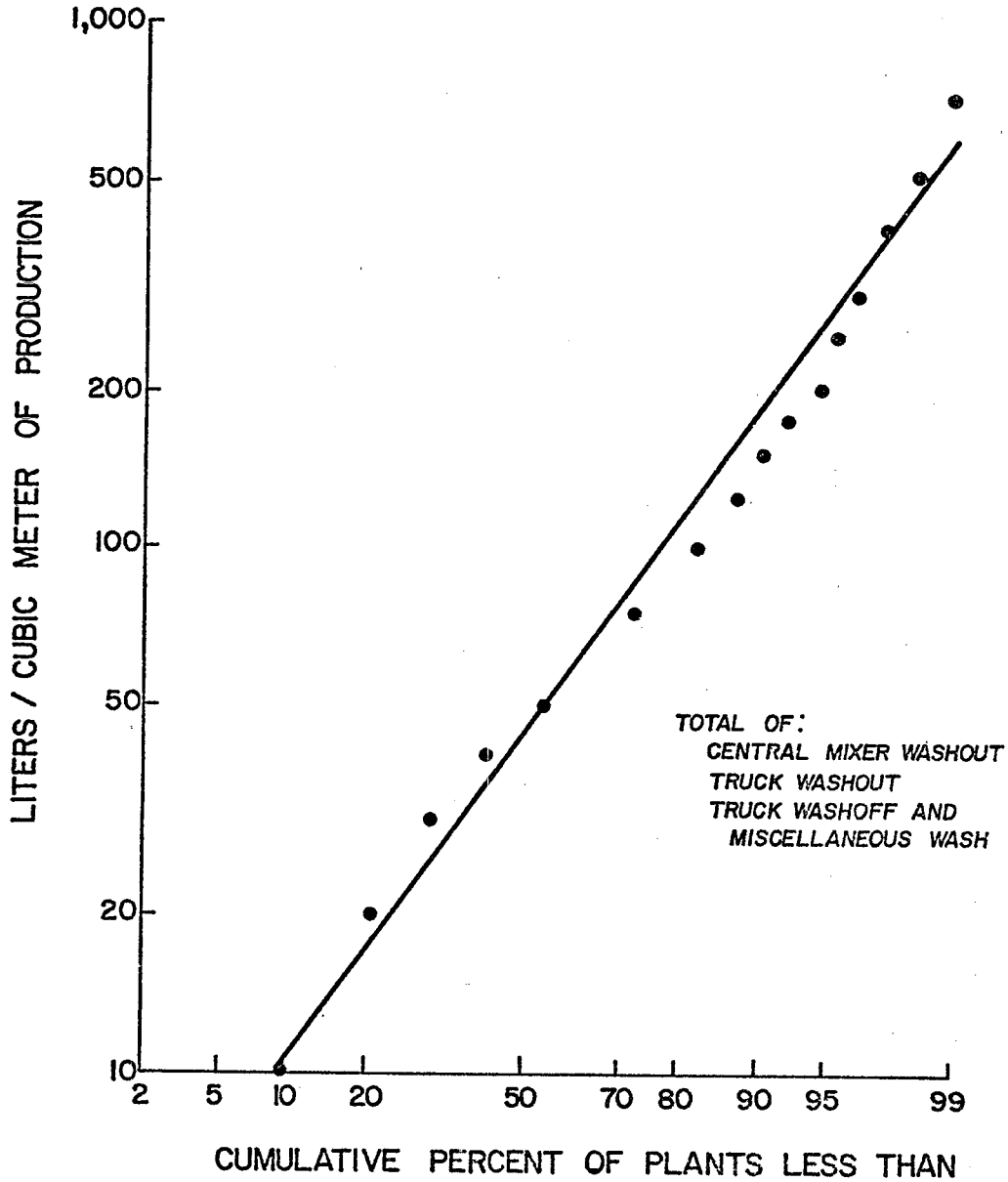

FIGURE 12
DISTRIBUTION OF WASTEWATER GENERATED
AT PERMANENT READY-MIXED CONCRETE PLANTS
(DATA BASED ON 385 PLANTS)

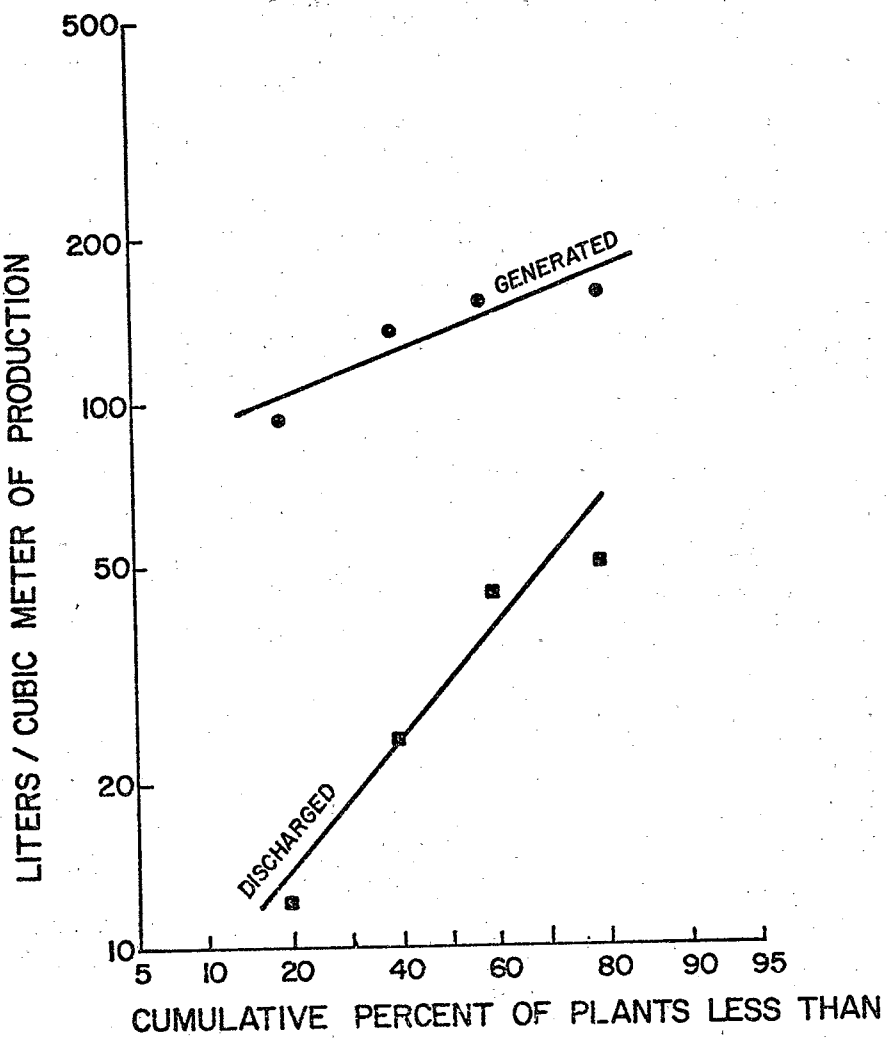

FIGURE 13

DISTRIBUTION OF PROCESS WASTEWATER GENERATED AND DISCHARGED AT READY-MIXED CONCRETE PLANTS (VERSAR MEASUREMENTS OF 5 PLANTS)

Waste water treatment generally involves sedimentation to remove suspended solids. Two percent of the plants adjust the pH of the waste water for discharge as part of their treatment. Six percent of the plants contacted have no waste water treatment. The sedimentation techniques usually used in this industry are:

1) earthen ponds
2) concrete tanks or ponds
3) sloped slab basins
4) mechanical clarification units

Where pH is adjusted, sulfuric acid is typically the chemical used. The waste water treatment methods used at plants visited are given in the following table:

Waste water Treatment Practices at Selected Ready-Mixed Concrete Plants

Plant	Settling Pond	Sloped Slab	Mechanical Clarifier	pH Adjust	Reuse of Waste water
			Treatment Practiced		
7305	x				
7363	x		x		x
7365	x				
7385	x		x		x
7441	x		x		x
7451	x				x
7452	x				x
7487		x	x		x
7542			x	x	x
7543			x		x
7544	x		x		x
7545	x		x	x	x
7699		x	x		x
7729			x		x
7731		x			
7732			x		x
7736			x		x
7750		x			x
7755			x		x
7757	x		x		x

The clarified waste water may be reused for truck washout, added to mix water, or discharged. In most plants the solids removed from a sloped slab or a mechanical clarification system are either sold as basefill material, reused for batching concrete, or landfilled.

Specific information on waste water disposal methods used at some plants is presented as follows:

Plant	Total Containment	Waterway	Evaporation/ Percolation	Comments
7305		x		
7363	x			Except during heavy rainfall
7365			x	
7441	x			Yard runoff discharged during heavy rainfall
7451	x			Yard runoff discharged during heavy rainfall
7452			x	
7487	x			Yard runoff discharged to waterway
7542		x		
7543	x			Yard runoff discharged to waterway
7544	x			Yard runoff discharged to waterway
7545		x		
7699		x		Landfilled
7729	x			
7731				Discharge to storm sewer
7732	x			
7736	x			
7750	x			Yard runoff discharged to waterway
7755				Discharges to municipal sewer
7757	x			Yard runoff discharged to waterway

Mixer truck washout and washoff are reused at many of the plants reducing the requirements for disposal.

Twelve plants were found in this study which treat yard runoff. Eight of the twelve plants combine and treat yard runoff with other process waste water.

Effluent information measured by EPA is as follows:

Plant	7305*	7365	7542	7543**
Flow, liter/cu m (gal/cu yd)	40 (8)	20 (4)	248 (50)	25 (5)
pH	12.1	11.8	5.7	10.1
Parameter Amounts, kg/cu m (lb/cu yd)				
TSS	0.005 (0.008)	0.002 (0.003)	0.001 (0.0017)	0.0001 (0.00017)
Parameter Concentration, mg/liter				
TSS	125	89	4	4

* Plant supplied data
** Yard runoff data

Plant	7544**	7545	7545**	7731
Flow, liter/cu m (gal/cu yd)	20 (4)	163 (33)	129 (26)	69 (14)
pH	12.5	6.5	10.8	11.5
Parameter Amounts, kg/cu m (lb/cu yd)				
TSS	0.0008 (0.003)	0.0015 (0.0025)	0.008 (0.013)	0.001 (0.002)
Parameter Concentration, mg/liter				
TSS	38	9	61	15

** Yard runoff

PORTABLE PLANTS

The sources of waste water in portable plants are idential to those in permanent plants. The distribution of waste water generated at the plants studied is shown in Figure 14. Because of recycle of mixer truck washout and washoff for truck washout is practiced in the industry, the quantity of waste water discharged is reduced. Mixer truck washout and washoff constitute approximately 80 percent of the waste water volume.

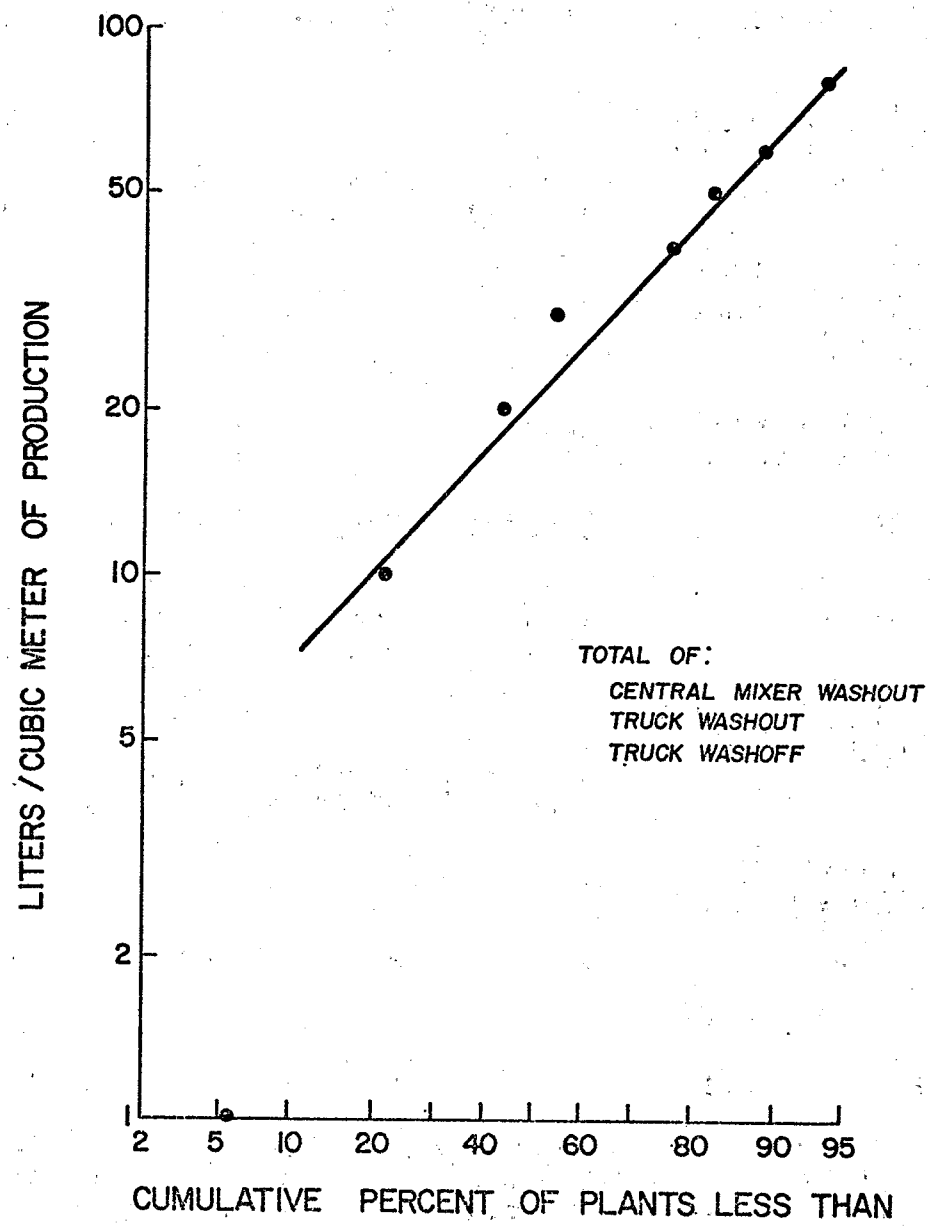

FIGURE 14
DISTRIBUTION OF WASTEWATER GENERATED
AT PORTABLE READY-MIXED PLANTS
(DATA FROM 18 PLANTS)

Typical waste water treatment at portable plants involves the removal of suspended solids in a settling pond. There may be no effluent from the pond because of evaporation and percolation. None of the plants contacted adjust pH as part of waste water treatment. Ten percent of the plants contacted had no system for recovery of wash water and hence no treatment of waste water.

Facilities to remove suspended solids vary in detail from plant to plant but are of the following:

(1) earthen settling ponds,
(2) earthen settling ponds with filtered overflow,
(3) mechanical clarification systems.

Mechanical clarification systems are designed to settle and separate suspended solids in a more compact space than ponds. Plant 7753, which uses a mechanical clarification system, uses the aggregate removed from the system for fill material.

The methods of waste water treatment used at several plants are:

Plant	Settling Pond	Mechanical Clarification & Discharge	Reuse of Waste water	Other
7362				no treatment, no discharge
7601	x			
7602	x		x	
7603	x		x	
7604	x			
7609	x			
7627	x		x	
(4 plants)				
7633	x			
7641				no treatment
7649	x			filter pond
7691	x			
7706	x		x	
(4 plants)				
7707	x			
7753		x	x	
7758				no treatment, no discharge

At some of the plants, recycle mixer truck washout and washoff reduces the total volume of disposed waste water. The methods of waste water disposal practiced at the plants studied is presented below.

Plant	Total Containment	Disposal to Waterway	Other Disposal
7362			evaporation-percolation on yard
7601		x	
7602	x		
7603	x		
7604	x		
7609			yard dust control
7627	x		
(4 plants)			
7633	x		
7641			no treatment
7649		x	
7691	x		
7706	x		
(4 plants)			
7707			storm sewer
7753	x		
7758			water used only to spray stockpiles at plant site

Data on the quality of the effluents is not available from portable plants but it should be similar to that of permanent ready-mixed plants.

MOBILE PLANTS

Waste water from these plants comes from mixer washout and concrete-mobile washoff and miscellaneous sources. The miscellaneous sources of waste water are yard dust control and runoff from spills and solid waste piles. Concrete-mobile mixer washout and washoff constitute approximately 75 per cent of the waste water volume. Concrete in the plastic state is not a source of waste water.

The quantity of concrete-mobile waste water generated at plant 7759 is 11 liter/cu m (2.2 gal/cu yd); at plant 7760 it is 10 liter/cu m (2 gal/cu yd). Since waste water volumes are small, treatment practices in the industry are not sophisticated. Plant 7759 contains its waste water in a settling/evaporation area. Plant 7760 collects the waste water from concrete-mobile mixer washout in a bucket, carries it to the next job site, and uses the waste water to

"prime" the mixer. According to the manufacturer of the concrete-mobile, this later technique is commonly practiced. All of the mobile plants contacted discharge waste water to an evaporation/percolation area.

WASTEWATER TREATMENT SYSTEMS

The waste water from ready-mixed concrete plants contains suspended solids, high pH, and COD. Tables 9, 10 and 11 detail the types of treatment techniques used throughout this industry.

Eighty-two per cent of the permanent ready-mixed concrete plants surveyed use treatment ponds for truck and central mixer washout water. Fifty-eight per cent of the plants reported using evaporation or percolation ponds, while 11 per cent use settling ponds, 12 per cent use filter ponds, and 1 per cent reported using sloped slab basins. Clarification equipment is used in 12 per cent of the plants and 6 per cent have no treatment. pH is adjusted in only 1.6 per cent of the plants studied. Sixty-three per cent of the plants using evaporation or percolation ponds have no discharge (excluding rainwater runoff). The remainder of the plants using evaporation or percolation ponds discharge truck washoff or other miscellaneous water from the plant. Industry sources have indicated that the use of mechanical clarification equipment is less widespread than the 12 per cent found in this study, i.e., 3 per cent. The prevalence of sloped slab basins may be greater than the data reported indicate since typically a plant with sloped slab basins and settling ponds would report only the latter.

Those portable ready-mixed concrete plants which have treatment use some form of settling ponds or mechanical clarifiers.

TABLE 9

Summary of Treatment of Central Mixer and Truck Washout Water in Ready-Mix Concrete Operations (Information Based on 430 Permanent Ready-Mix Concrete Plants)

Treatment	No. of Plants*	Total	% of Total
Ponds		353	82.1%
Settling ponds	48		11.2%
Evaporation/percolation ponds	248		57.7%
Filter ponds	50		11.6%
Sloped pond separation	5		1.2%
Unidentified**	2		0.5%
Clarification Equipment			12.3%
Home-made aggregate reclaimer	8	53	1.8%
Screw	9		2.1%
Drag chain washers	31		7.2%
Screen	3		0.7%
Unidentified	2		0.5%
pH Adjustment	7	7	1.6%
No treatment	29	29	6.7%
No washout at plant site	34	34	7.9%

*Some of the plants have more than one kind of treatment.
**Information was not complete enough to identify the exact type of treatment.

TABLE 10

Summary of Treatments of Truck Washoff Water in Ready-Mixed Concrete Operations (Information Based on 430 Permanent Ready-Mixed Concrete Plants)

Treatment	No. of Plants	Total	% of Total
Treated with truck washout		221	51.4%
Ponds		187	43.5%
Settling ponds	21		4.9%
Evaporating/percolation ponds	135		31.4%
Filter ponds	28		6.5%
Sloped slab separation ponds	3		0.7%
Clarification Equipment		33	7.7%
Home-made aggregate reclaimer	5		1.2%
Screw	4		0.9%
Drag chain washers	20		4.6%
Screen	2		0.5%
Unidentified	2		0.5%
pH Adjustment	1	1	0.2%
Treated Separately From Washout Water		7	1.7%
Settling	5		1.2%
Unidentified	2		0.5%
No Treatment		188	43.7%
Becomes yard runoff	155		36.0%
Doesn't become yard runoff	30		7.0%
Unidentified	3		0.7%
No Washoff at Plant Site	35	35	8.1%

TABLE 11

Waste water and Treatment Technology For Portable Ready-Mixed Concrete Plants

Code	Treatment	Quantity of Waste water (liters/day) Central Mixer Washout	Truck Washout	Truck Wash Off
7362	evap/perc yard	none	none	190
7595	evap/perc pond	2,650	11,350	unknown
7601	filter pond	760	7,570	none
7602	evap/perc pond	1,890	3,780	unknown
7603	evap/perc pond	1,890	3,780	unknown
7604	evap/perc pond	380	1,510	unknown
7609	evap/perc pond	1,890	15,100	unknown
7627	evap/perc pond	1,890	190	unknown
7632	no treatment	1,890	9,840	unknown
7633	evap/perc pond	760	15,100	unknown
7641	no treatment	7,570	1,510	190
7649	filter pond	1,890	13,250	760
7691	evap/perc pond	380	1,890	unknown
7701	no treatment	760	9,080	1,140
7702	no treatment	760	11,350	1,420
7706	evap/perc pond	2,270	28,390	unknown
7707	evap/perc pond	760	7,570	760
7715	no treatment	unknown	2,270	190
7751	evap/perc pond	190	7,570	unknown

Settling Ponds

Fifty-two per cent of the plants were found to treat truck washoff water in the same system used for treating truck washout water. For thirty-six per cent of the plants truck washoff water becomes untreated yard runoff. Only 2 per cent of the plants treat truck washoff water separately from washout water. The widespread use of evaporation/percolation ponds is an indication of small waste water volumes. For the ready-mixed concrete industry 50 per cent of the plants with 75 cu m/day (100 cu yd/day) concrete production have less than 6,500 liters/day (1,700 gallons/day) of total waste water. It is likely that a disproportionate number of the plants with evaporation/percolation ponds are also plants with small production.

Most settling systems, including ponds, sloped slab basins and mechanical clarification units, discharge during periods of heavy rainfall, even if at no other time. The amount of discharged water may be minimized by reducing the drainage area in which wastes are generated. The design of settling ponds in this subcategory depends on the amount of land available and the pond clean-out procedure as well as the amount of waste water to be handled. Many of the ponds are constructed of concrete with walls at least one foot thick.

Figure 15 gives settling information determined on a sample of truck washout taken from plant 7363. For this particular sample a level of 50 mg/liter of suspended solids was obtained after 4 hours settling time and 19 mg/liter after 20 hours settling time. Washout from concrete trucks and mixers contains coarse aggregate, sand and cement. When dumped into a pond the coarse aggregate and sand settle almost immediately. The cement and a small amount of fines from the sand and coarse aggregate settle much more slowly as shown in Figure 15. A residence time of 24 hours in a undisturbed pond should be adequate for settling pond design in this subcategory. Settling pond area requirements are of the order of 18.3 m by 18.3 m (60 ft by 60 ft) for a large plant and less for smaller plants. Constructed ponds, usually made of concrete, generally are smaller than this. Ponds that take advantage of local terrain such as old gravel or sand pits, quarries, low spots, and bulldozed earthen pits may be of any size.

Many of the concrete plants are located in neighborhoods where land availability is limited and the price of additional land is high. However, ninety-four per cent of the concrete plants supplying data already have treatment facilities and space available. Of the remaining six per cent it is likely that many have sufficient land available for treatment facilities if needed. Therefore, it is probable only one or two per cent of the plants will have a problem with availability of land for treatment facilities and these problems can probably be overcome with proper selection of treatment technology.

Most of the solid wastes that require disposal come from:

(1) waste concrete mix - approximately 1 per cent of production,

(2) truck washout - approximately 59 kilograms per cubic meter (100 pounds per cubic yard) at an average of 1.5 washouts per day per truck,

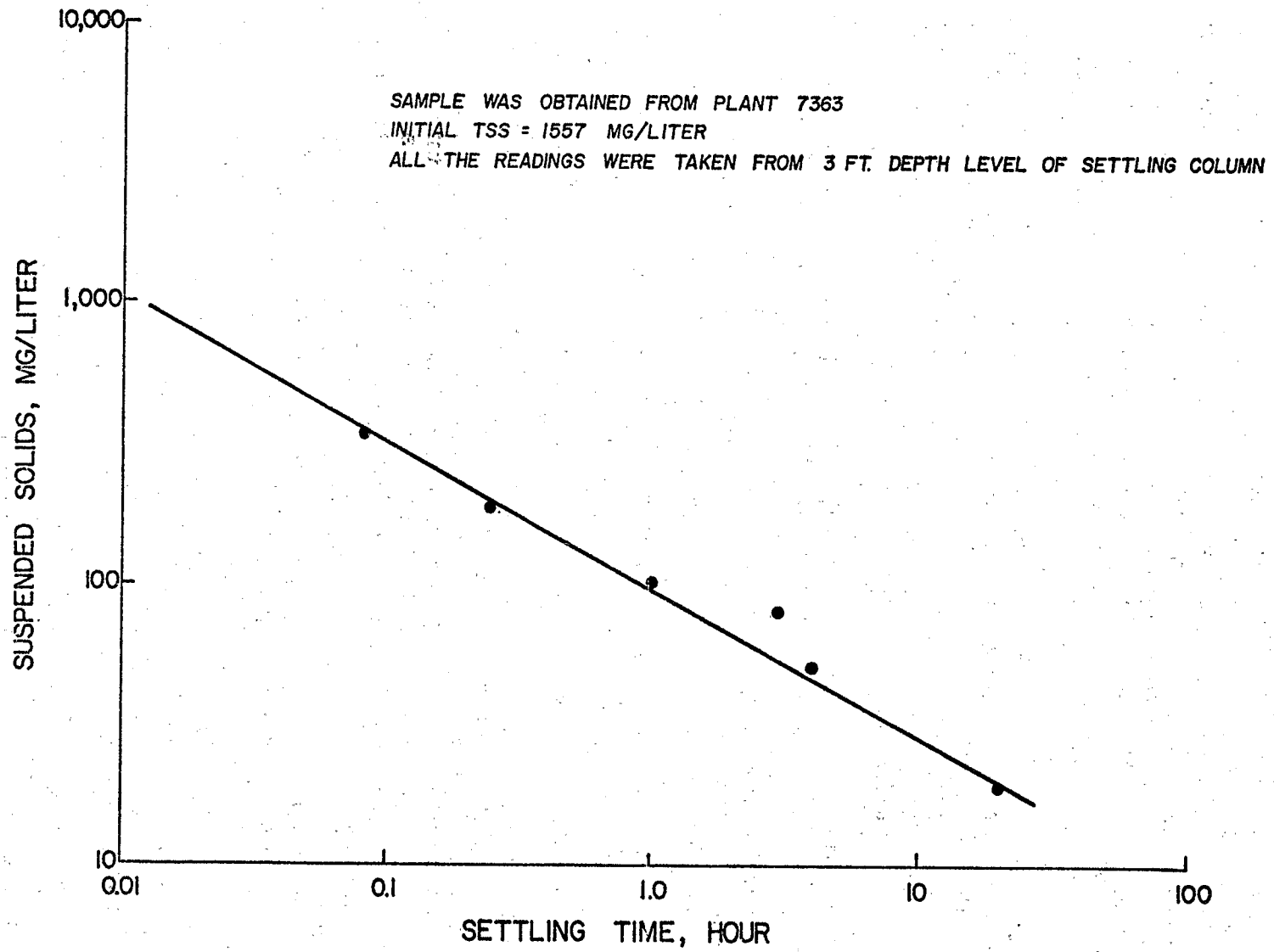

FIGURE 15
SETTLING RATES FOR CONCRETE FINES IN TRUCK WASHOUT

(3) central mixer washout - approximately 227 kilograms (500 pounds) per washout, usually once per day,

(4) truck washoff - variable but relatively small amount compared to items 1, 2, and 3.

Whenever possible returned concrete is disposed of by using it to make precast structures for which forms are kept assembled, or for paving the yard of the concrete plant. If land is available it may simply be dumped. If clarification equipment is available, the waste concrete may be processed to recover the aggregate portion. Truck washout, in the absence of clarification equipment, will most likely be settled in the pond and constitutes the major solids contribution. Truck washoff and central mixer washout may or may not drain to the pond depending on plant layout.

An evaporation/percolation pond may be natural or constructed but its primary characteristic is that it disposes of waste water through the dual mechanism of evaporating water into the air and allowing water to seep into the ground. Since most of these ponds are located in relatively high rainfall areas and the pond surface areas are usually small most of the water loss is by percolation. Many, if not most, of these ponds have no discharge to surface waters.

Often the plant can take advantage of some available configuration on its property for waste water treatment or storage. Low spots, valleys, abandoned quarries or gravel pits, excavations or other depressions may be used. In some cases, ponds constructed using these areas have such large volume that they normally have no discharge.

Since the settling ponds used generally need not exceed 18.3 by 18.3 meters (60 by 60 feet), excavation of earthen ponds is fairly common. As these ponds fill, they may be abandoned or cleaned out.

Since the settling pond size required is relatively small and concrete is readily available, many of the settling ponds are constructed of concrete. The concrete basins or tanks are more expensive to build than local terrain and other earthen ponds but are easier to clean and maintain, and have a better appearance.

In most cases at least two settling ponds are used in series. The first pond is used for removing the readily settleable materials. Most of the sand and gravel will settle within the first minute and most of the cement will usually settle within the next few minutes. The remaining fines take hours to settle and are sensitive to any turbulence or disturbance. Therefore, it is common practice to have at least two ponds in series - the first a roughing pond to collect most of the suspended solids and the subsequent pond(s) for attaining low suspended solids levels and storing water for reuse or discharge. Quite often the sand and gravel may be removed by sloped slab collection or a clarification unit prior to the first pond and the bulk of the cement removed in the first pond. The first pond also collects the low density floating particles resulting from air entrainment agents.

Figure 16 shows two earthen ponds in series. The first pond collects most of the suspended solids while the second pond is primarily for final settling and storage. Water can be recycled without treatment or discharged after pH adjustment. Figure 17 shows two concrete basins and a holding pond in series. The first basin collects the coarse aggregate, the second basin is for removing cement and other fines. The water passes from the settling basin through straw bale filters which not only remove some of the residual suspended solids but also retain the floating particles caused by air entrainment agents. The holding or pumping pond can be used for recycle or pH adjustment prior to discharge.

Filter ponds are a special kind of settling pond. In our study 12 percent of the plants reported using filter ponds in their treatment system. The relative popularity of this treatment technology stems largely from its simplicity and low cost. Figure 18 demonstrates the basic principle of a filter pond. A portion of the pond wall is constructed of some porous material such as crushed rock to stone (2 to 15 cm diameter) so that drainage occurs in this material. Most of the settling occurs in the filter pond prior to waste water discharge through the porous wall. These ponds are reportedly only about 50 percent as efficient as a settling pond due to the short circuiting of water and escape through the filter without sufficient settling time. In some cases the filter pond is backed up with a holding pond or basin, in other cases it is not and the filtered water is directly discharged. Aside from its reduced settling efficiency, the filter pond is much like an earthen settling pond. One reason for its popularity for treating concrete waste water

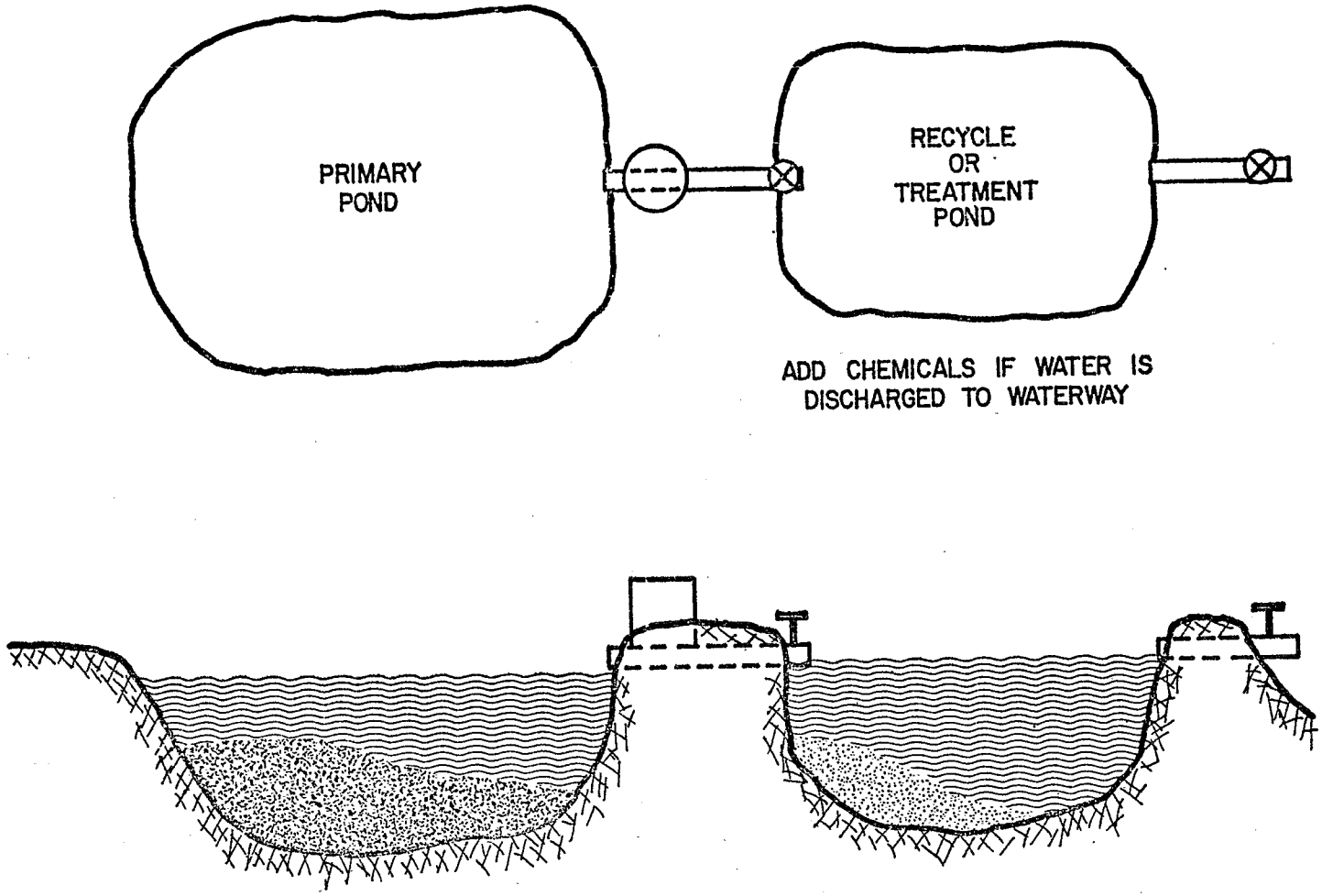

FIGURE 16
SERIES SETTLING PONDS

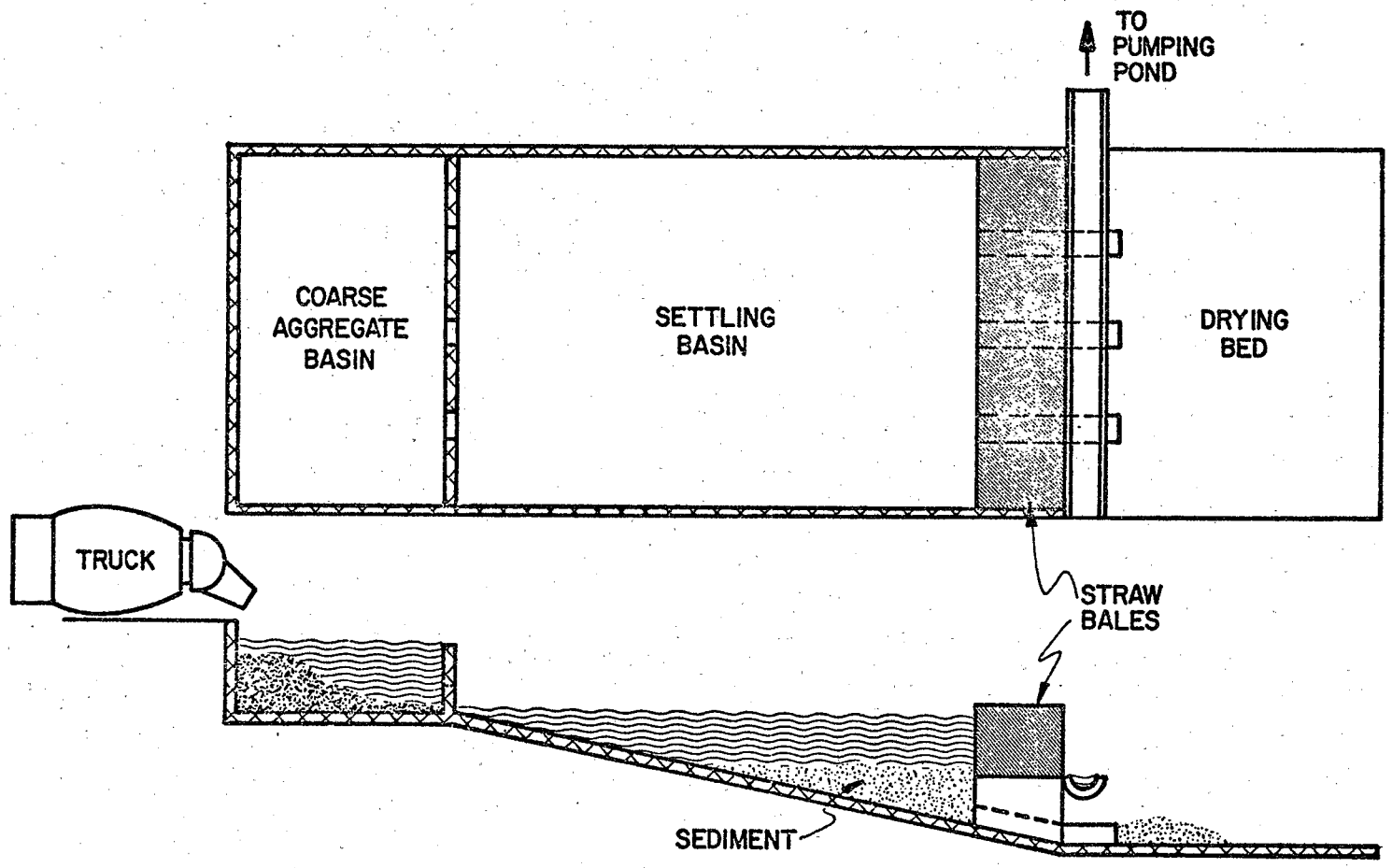

FIGURE 17
SERIES CONCRETE BASINS WITH STRAW FILTERS

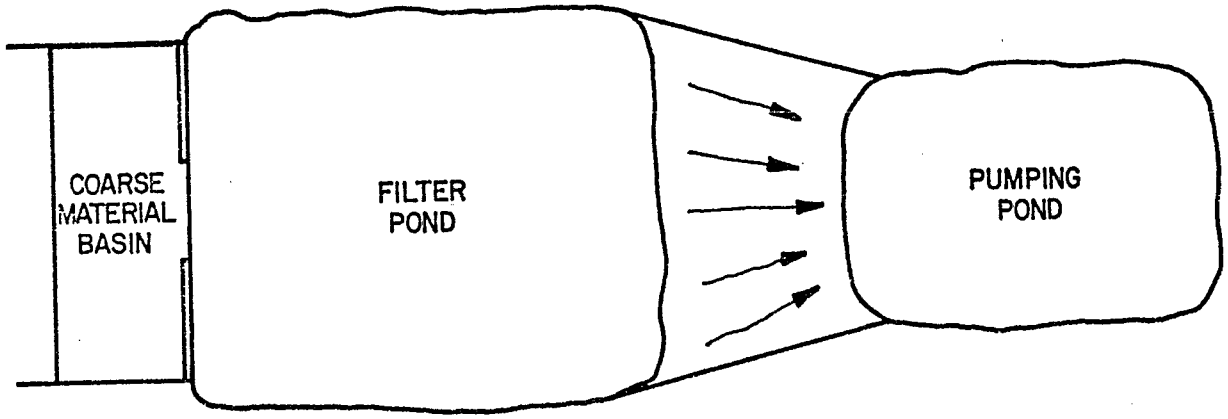

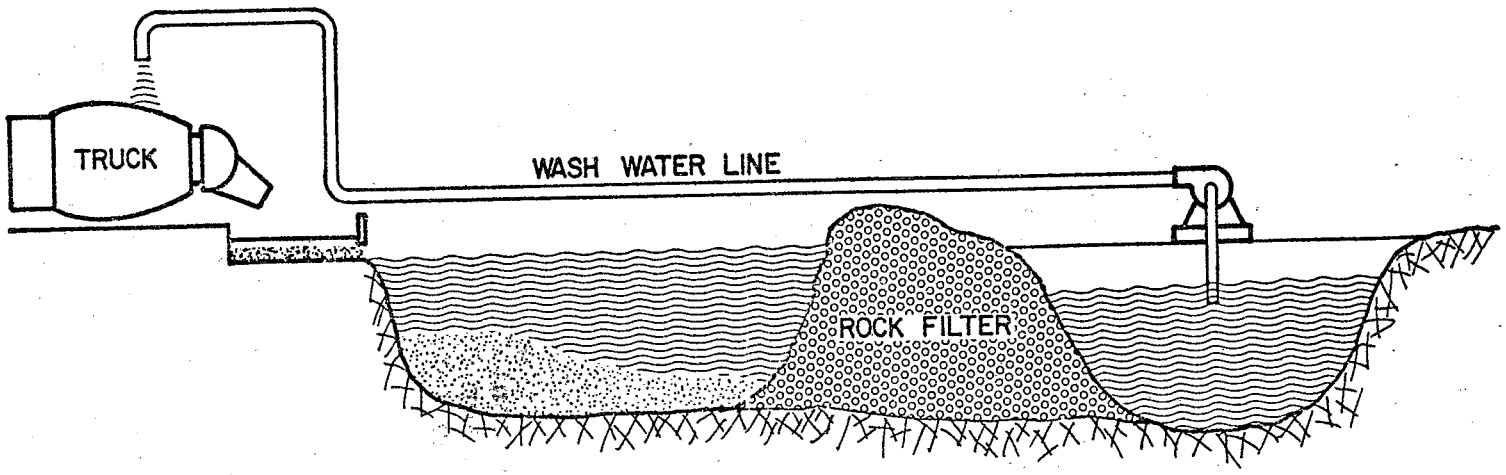

FIGURE 18
FILTER POND

is ability of the filter to retain most of the floating material on top of the pond.

Sloped Slab Separation Basins

Since the coarse aggregate and sand settle so rapidly, there is no need for a settling pond to remove them. If the waste water is dumped on a slab these components readily separate from the water. If this slab is gently sloped to provide drainage of the water, the aggregate will collect on the sloped surface and can be removed with a front-end loader. Baffles and other flow diversion installations are often used to improve the solids removal efficiency. Slope slab separation basins are generally used in series with settling basins to remove the concrete fines. Figure 19 shows an example of a sloped slab separation basin used in series with three settling basins. The discharge basin shown is made of reused concrete.

Sloped slab basin size is largely determined by the number of truck stations desired. Allowing 4.6 m (15 ft) space for each truck, four truck stations require 18.4 m (60 ft) slab length. An inclined slope of 6.1 to 12.2 m (20 to 40 ft) in width should be ample to collect the coarse aggregate. Therefore the slab area required may be estimated by multiplying number of truck stations needed times 56 sq m (600 sq ft) per truck station.

Approximately 83 per cent of the solids in concrete are made up of sand and coarse aggregate. Most of this will be deposited on the sloped slab along with some cement. The use of readily cleanable sloped slab removes approximately 75 per cent of the solids prior to the settling ponds. Also, separation of the aggregate from the cement in this way reduces the amount of drying for the concrete wastes which would have to be dredged. This reduces the amount of sludge to be dried by 75 per cent.

Mechanical Clarification

Mechanical clarification devices used in this industry are of three general types: drag chain washers, screw washers, and screens.

Drag chain washers consist of one or two chambered wash tanks with progressive drag chains to remove settled solids. Figure 20 illustrates a drag chain unit. Truck washout water is discharged into the wash tank. The fast settling coarse aggregate and most of the fine aggregate settle to the bottom of the tank and are conveyed by the drag chain

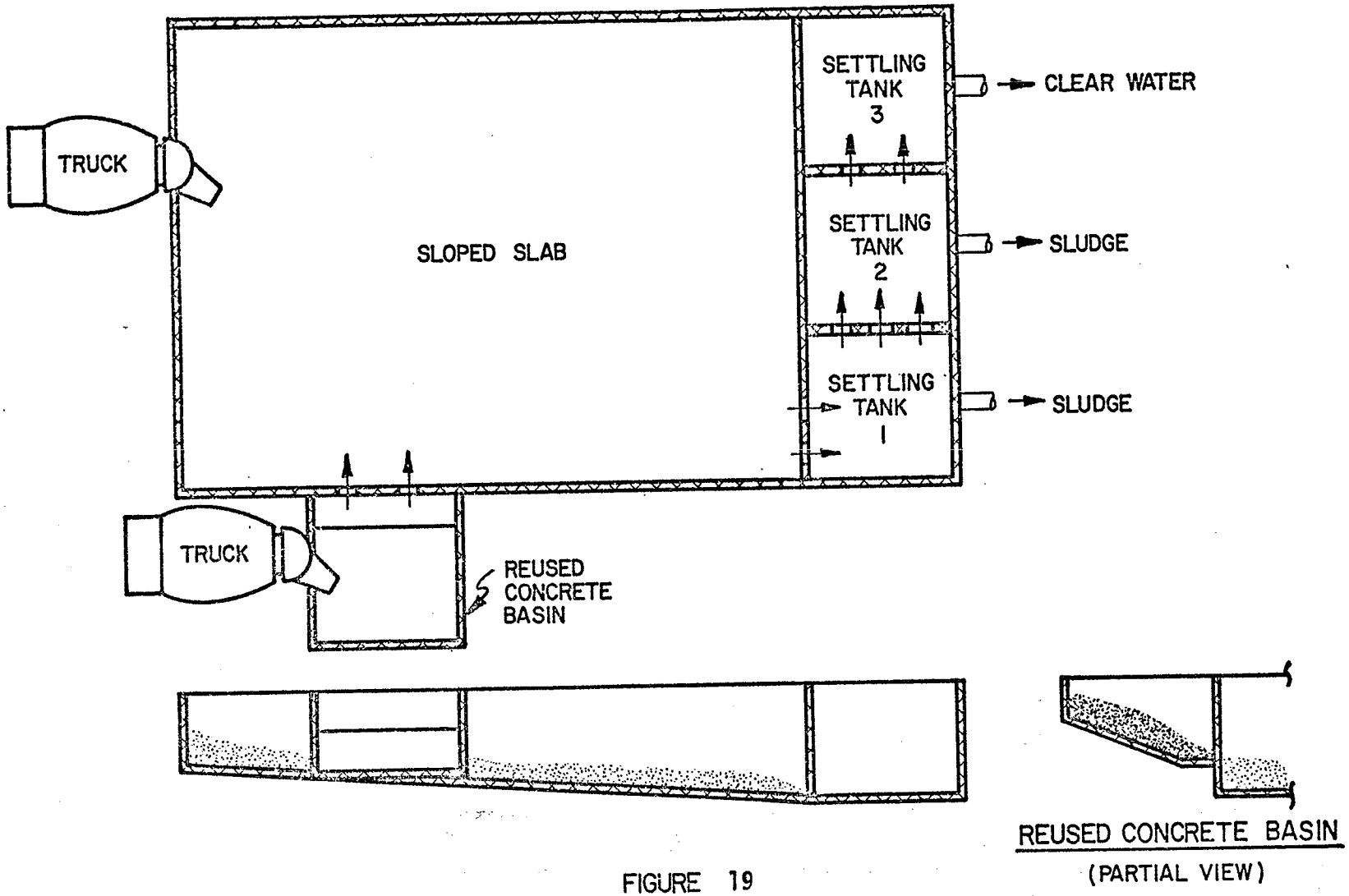

FIGURE 19
SLOPED SLAB SEPARATION BASIN

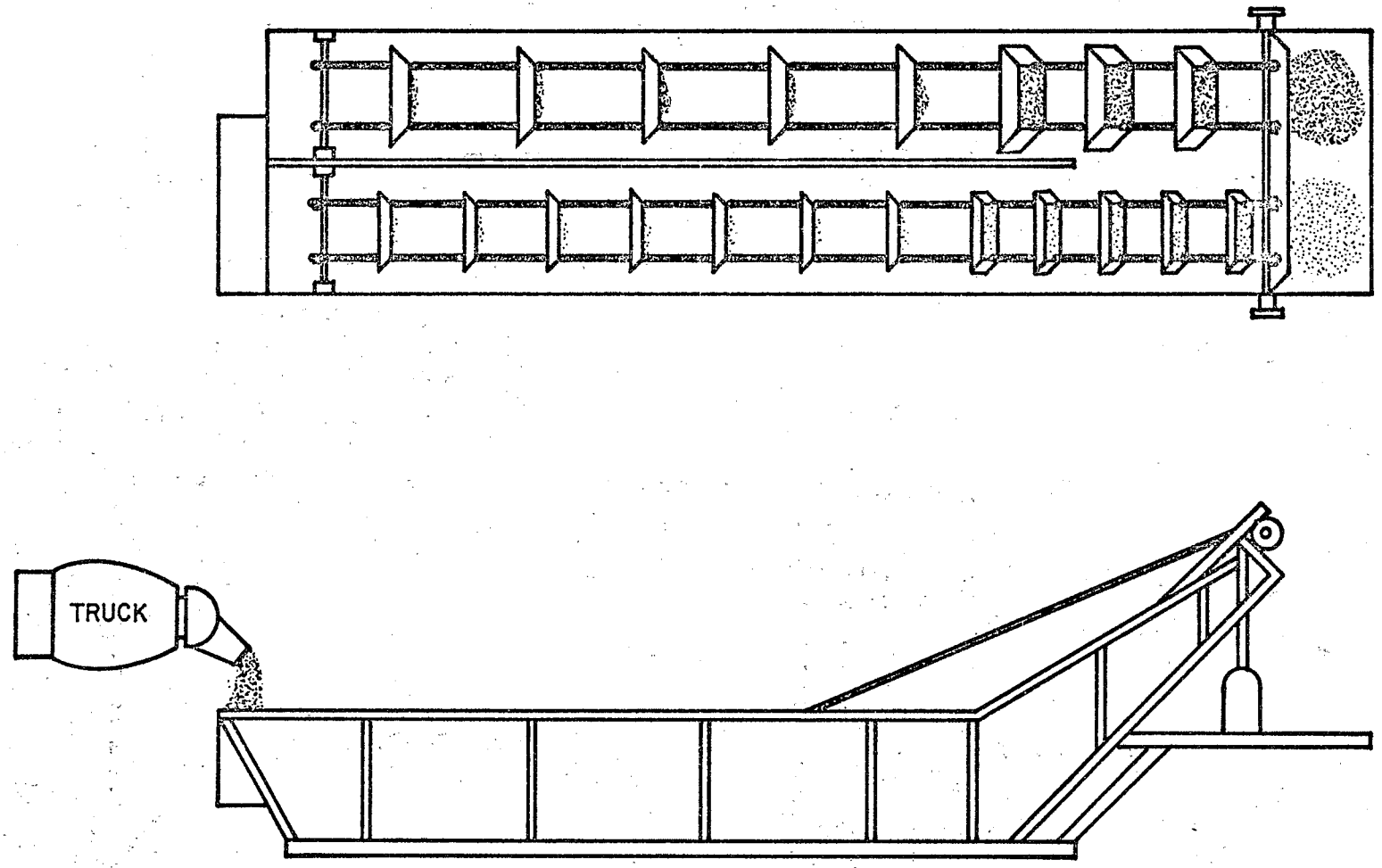

FIGURE 20
DRAG CHAIN WASHER

out of the tank, and dumped in a pile beside the unit. The slower settling cement fines are removed by a slow moving drag chain which conveys the fines over the end of the tank. The clarified waste water is collected in a sump and can be reused. If truck washout water is the only waste water handled and it is recycled, the system can probably operate without discharge. If truck washoff, central mixer washout, and other waste water is included, some discharge may be necessary. The discharge from this system requires further suspended solids removal and pH adjustment. The drag chain unit is compact, requiring a ground area of only about 6.1 m x 18.3 m (20 ft x 60 ft). The washout from at least twenty trucks can be handled in an area this size. Aggregate is dumped onto a pile convenient for resale or disposal. Cement sludge is also dumped onto a pile convenient for handling, but still needs additional drying before final disposal. The unit is operated by the truck driver. Automated cycle operation eliminates the need for any other manpower except for maintenance. Drag chain units are currently the most widely used of the mechanical separation devices (31 units out of 53 plants reporting).

Inclined screws can also be used for removing coarse aggregate and sand from truck washout water. Depending on the design of the screw, coarse aggregate alone may be removed or a mixture of coarse aggregate and sand. At least one commercially available screw washing unit also separates coarse aggregate and sand into two separate piles by using an aggregate screw and a sand screw in series. Figure 21 illustrates a screw washer. Truck washout is dumped into the lower end of the inclined screw and the coarse material is dumped out at the upper end. Figure 22 illustrates a double screw washer for separation of coarse aggregate and sand.

The screw washers differ from most of the treatment systems discussed so far, in that their primary purpose is recovery of waste components for reuse in concrete mixes. Single screws recover coarse aggregate for reuse. Double screw units recover both coarse aggregate and sand for reuse. The units are operated by the truck drivers, with no other operator being required. The single screw units reported are relatively old installations of a specialized nature. Essentially they are add-ons to basic sloped slab and settling pond systems. The double screw units are new and sold as part of a complete waste water treatment system. This total system includes not only the double screw washer but also a fabricated settling tank assembly for fines removal.

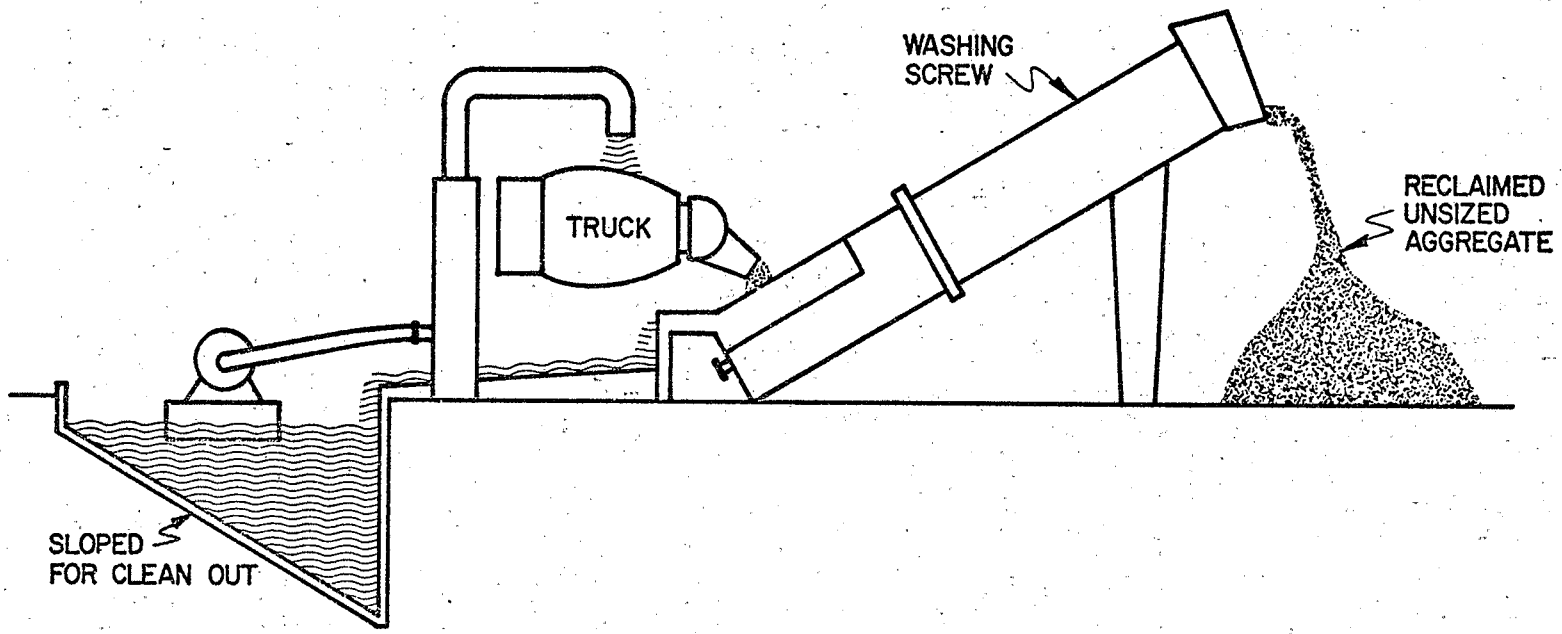

FIGURE 21
SCREW WASHER

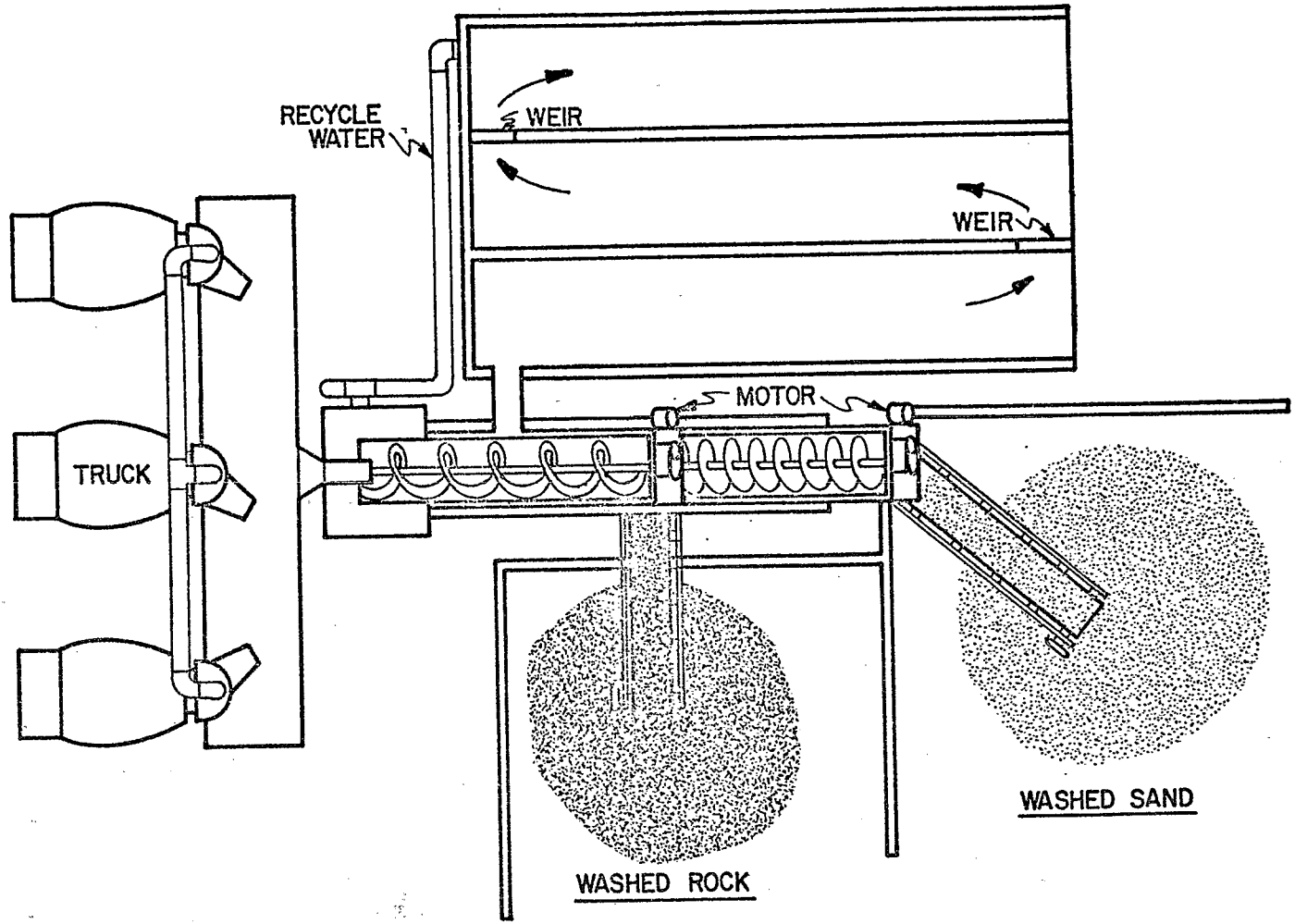

FIGURE 22
DOUBLESCREW WASHER

Screens are used to separate coarse aggregate and sand from cement fines and coarse aggregate from fine aggregate. Preliminary screening on truck washout will separate the coarse aggregate from the rest of the waste stream. This stream can then be passed through a sand screw for sand recovery. A second alternative is to separate coarse aggregate and sand, once the mixture has been recovered from the waste water stream by a drag chain or screw washer unit. Figures 23 and 24 represent two different utilizations of screens for separation purposes.

Once the suspended solids have been removed from the wash water by pond or tank settling, this water is suitable for several purposes. Reuse accomplishes several desirable objectives, including reduction in fresh water costs, conservation of water, and reduction or elimination of waste water discharge. Selective recycling of waste water is widely practiced today in the ready-mixed concrete industry. The following discussion covers the uses and problems encountered. The most common use for recycled water is truck washout (115 plants of 430 plants). This is logical for a number of reasons:

(1) Aside from mix water, truck washout consumes the largest volume of water used.
(2) Most settling systems are designed for treating and recovering truck washout water -- the recovered water is usually stored close to the truck washout systems.
(3) High dissolved solids and pH for the recycled wash water are not a problem.

Recycled water is also used for washing out central mixers in many plants, but this is not a major water use. Use of recycled wash water for truck washoff has been reported for a number of plants (73 plants of 430 plants). Use of recycled water is restricted for this purpose because the dissolved solids leave a film on the truck surface and because truck washoff is often remote from recycled water availability.

After treatment for suspended solids and recycle of all possible waste water, it is still necessary in many cases to discharge a portion of the waste water. This waste water usually has a pH of 10 to 12. Where pH is adjusted, the most common practice is to use sulfuric acid to lower pH to a range of 6 to 9. The amount of concentrated acid required for adjusting pH to 7 is given in Figure 26. The control of pH by addition of acids tends to decrease the suspended solids and increase the dissolved solids in this waste water.

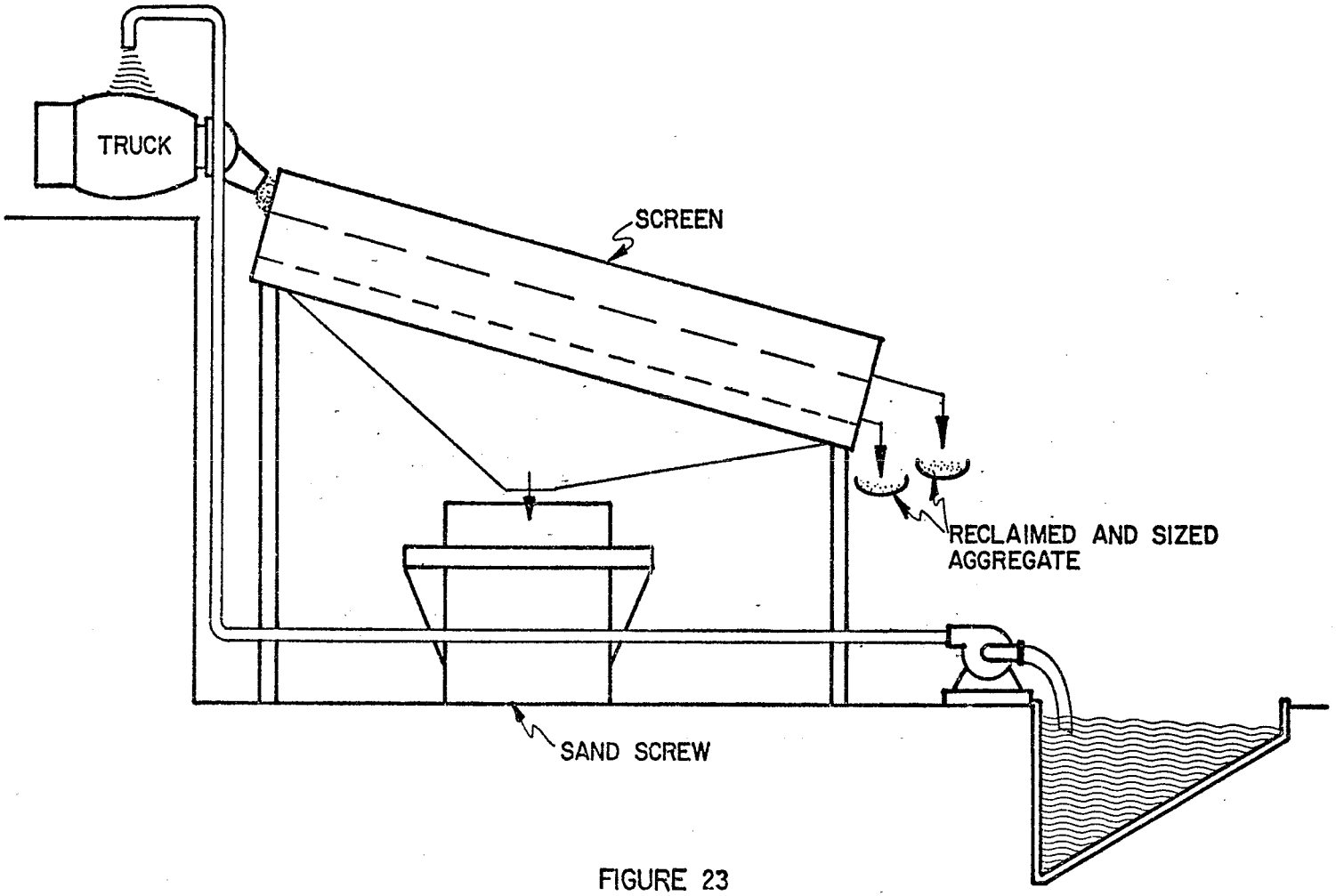

FIGURE 23
MECHANICAL SCREEN SEPARATOR

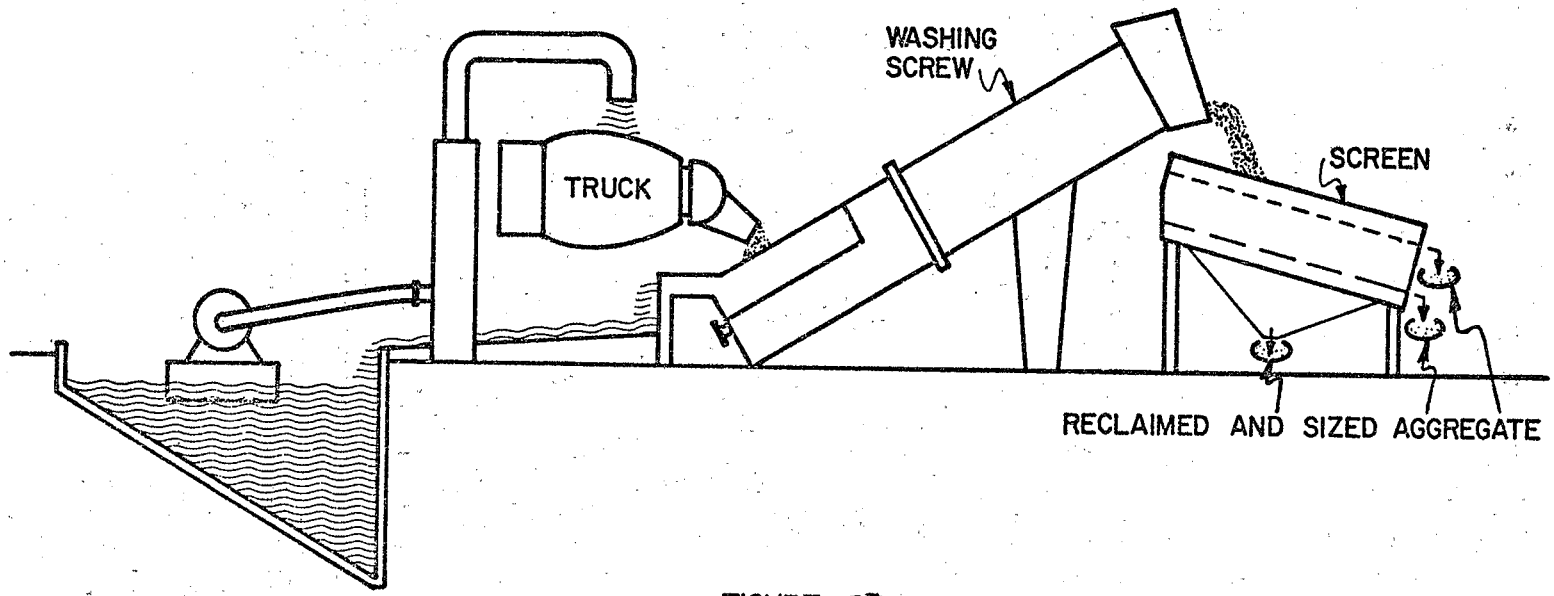

FIGURE 25
SCREW WASHER AND SCREEN FOR AGGREGATE SEPARATION

PRETREATMENT TECHNOLOGY

Concrete products operations are often located in urban or suburban locations with access to publicly-owned waste water treatment plants. In areas where publicly-owned facilities could be used, pretreatment could be utilized to reduce heavy suspended solids loads, particularly for ready-mixed concrete waste water. In some instances pH control and some reduction in oil and grease may be appropriate.

NON-WATER QUALITY ENVIRONMENTAL ASPECTS

For those waste materials considered to be non-hazardous where land disposal is the choice for disposal, practices similar to proper sanitary landfill technology may be followed. The principles set forth in the EPA's Land Disposal of Solid Wastes Guidelines (CFR Title 40, Chapter 1; Part 241) may be used as guidance for acceptable land disposal techniques.

For those waste materials considered to be hazardous, disposal will require special precautions. In order to ensure long-term protection of public health and the environment, special preparation and pretreatment may be required prior to disposal. If land disposal is to be practiced, these sites must not allow movement of pollutants such as fluoride and radium-226 to either ground or surface water. Sites should be selected that have natural soil and geological conditions to prevent such contamination or, if such conditions do not exist, artificial means (e.g., liners) must be provided to ensure long-term protection of the environment from hazardous materials. Where appropriate, the location of solid hazardous materials disposal sites should be permanently recorded in the appropriate office of the legal jurisdiction in which the site is located.

The primary non-water quality environmental impact of wastes from the manufacture of concrete products is solid waste disposal. Solid waste comes from waste concrete mix, waste concrete from truck, bucket and mixer washouts, and dusts and concrete from truck and yard washoffs. Quantities of these solids wastes have been given earlier in Section V.

Disposal practices for these solid wastes vary, but essentially they may be listed as:

(1) drying and land disposal of all solid wastes

(2) recovery of aggregates for landfill, and drying and land disposal of cement portion

(3) recovery of coarse aggregate for reuse plus drying, and land disposal of cement plus sand portions

(4) separation of coarse and fine aggregate for reuse, and drying and land disposal of cement portion

(5) separation of coarse and fine aggregate for reuse of cement portion in new mixes.

Treatment technology can be varied to suit land availability. Treatment systems for even the largest reported ready-mixed plants with the greatest number of trucks can be placed on less then 930 sq m (10,000 sq ft) land space if mechanical clarification is used.

Drying, storage and disposal of solid wastes often takes up more land area than the treatment system. However, the solid waste disposal technology may be tailored to land availability. In situations where solid waste storage space is limited, cement sludges may be sent to off-site landfill without drying (Plant 7699), and dry wastes such as aggregate can be reused, sold, or landfilled without storage.

In many cases ready-mixed concrete plant waste water treatment facilities reflect the neighborhood in which they are located. Those located in urban or suburban residential areas are likely to be compact and constructed of painted concrete with concrete paving and sometimes enclosed in buildings. Those treatment facilities located in rural or suburban commercial areas have more space and are more likely to use earthen ponds and settling basins.

Concrete products other than ready-mixed concrete require very little land for waste water treatment purposes.

The waste water treatment technologies used for plants manufacturing concrete products are not energy-intensive. Truck washout for ready-mixed concrete is dumped directly into the treatment facilities. Other waste water usually flows by gravity either into treatment systems, discharge ditches or to ground disposal. Some pumping is involved in transferring waste water from one tank to another and in pumping waste water to and from the treatment system.

In addition to the energy required for waste water treatment, gasoline and other fuels will be needed to operate front-end loaders, trucks and other solid waste handling equipment.

Total energy requirement for the concrete industry waste water treatment is estimated by EPA to be 1.7×10^9 Kcal/yr (6.7×10^9 Btu/yr).

SECTION VII

COST, ENERGY, WASTE REDUCTION BENEFITS AND NON-WATER ASPECTS OF TREATMENT AND CONTROL TECHNOLOGIES

This section contains cost estimates for treatments to reduce pollutant levels in discharged waste water for plants manufacturing concrete products. It also covers costs for non-water quality aspects such as solid waste disposal.

Treatment processes to reduce pollutant levels are readily available for concrete industry waste waters. Suspended solids may be reduced by settling in ponds, basins, tanks or sumps. High pH caused by the lime fraction of cement may be reduced by addition of acid. Oils and greases may be reduced by gravity separation, skimming, and use of adsorbents.

In the tables presented in this section, Level A represents the minimum level of treatment found, while Levels B, C, D, and others represent improved or alternative treatment systems.

Cost information contained in this report was assembled directly from industry, from waste treatment and disposal contractors, engineering firms, equipment suppliers, government sources, and published literature. Whenever possible, costs are taken from existing installations, engineering estimates for projected facilities as supplied by contributing companies, or from waste treatment and disposal contractors' quoted prices. In the absence of such information, cost estimates have been developed from plant-supplied costs for similar waste treatment and disposal for other plants or industries. Modeling of treatment systems has been used in some cases to provide coherent cost patterns.

(1) Time Basis for Costs

All cost estimates are based on August 1972 prices and have been adjusted to this basis as necessary.

(2) Useful Service Life

The useful service life of treatment and disposal equipment varies depending on the nature of the equipment and process involved, its use pattern, maintenance care and numerous other factors. Individual companies may apply service lives

based on their actual experience for internal amortization. Internal Revenue Service provides guidelines for tax purposes which are intended to approximate average experience.

Based on information from industry and condensed IRS guidelines, the following useful service life values have been used:

(1)	General process equipment	10 years
(2)	Ponds, lined and unlined	20 years
(3)	Trucks, bulldozers, loaders and other such material handling and transporting equipment	5 years

(3) Capital Costs

Capital costs are defined as all front-end out-of-pocket expenditures for providing treatment and disposal facilities. These costs include costs for research and development necessary to establish the process, land costs when applicable, equipment, construction and installation, buildings, services, engineering, special start-up costs, contractor profits and contingencies.

(4) Annual Capital Costs

Most if not all of the capital costs are accrued during the year or two prior to actual use of the facility. This present worth sum can be converted to equivalent uniform annual disbursements by utilizing the Capital Recovery Factor Method:

$$\text{Uniform Annual Disbursement} = \frac{P\ i\ (1+i)\ \text{nth power}}{(1 + i)\ \text{nth power} - 1}$$

Where P = present value (Capital expenditure)
i = interest rate, in percent
n = useful life in years

The capital recovery factor equation above may be rewritten as:

Uniform Annual Disbursement = P(CR-i-n)

Where (CR-i-n) is the Capital Recovery Factor for i% interest taken over "n" years of useful life.

Annual Capital Costs include costs for straight line depreciation over the n years of useful life as well as the average annual cost for interest in invested capital. An interest rate of 10 percent has been used for all cost calculations.

(5) Land Costs

Waste water treatment facilities require removal of land from other economic use. The amount of land so tied up will depend on the treatment and disposal method employed and the amount of wastes involved. For the concrete products industry, it is assumed that waste water treatment facilities and storage or disposal of wastes do not affect the ultimate market value of the land. Cost estimates include only interest on land value.

(6) Operating Costs

Annual costs of operating the treatment and disposal facilities include labor, supervision, materials, maintenance, taxes, insurance and power and energy. A factor of 3 per cent of invested capital was taken to cover interest on working capital, taxes and insurance.

(7) Rationale for Cost Developments

All plant costs are estimated for model plants rather than for actual plants. For the ready-mixed concrete subcategory, where various treatment technologies are used, costs are developed for two different size plants for each technology. For other less complex subcategories, costs are developed for only one plant size. Cost variances due to individual circumstances are discussed for the individual cases.

The effects of treatment technology, plant location, and plant size on costs for treatment and control have been considered and are detailed in subsequent sections for each specific subcategory. For ready-mixed concrete plants, costs have also been determined for aggregate recovery and the sensitivity of the treatment and disposal method to operating labor costs.

(8) Cost Estimating Design Assumptions

(a) All non-contact cooling water is exempted from treatment (and treatment costs) since no pollutants are introduced.

(b) Water treatment, cooling tower and boiler blowdown discharges are not treated since these are non-process waters which are not the subject of this document.

(c) All solid waste disposal costs are included as part of the cost development.

COST ESTIMATES FOR MODEL PLANTS

HIGH-PRESSURE AUTOCLAVE PLANTS

Waste water generated at three plants for which economic data are available ranges from 18,000 liters/day (5,000 gpd) to 57,000 liters/day (15,000 gpd). Since suspended solids are low in the steam condensate, which constitutes most of the waste water, the only major treatment required is pH adjustment. Table 12 gives treatment costs. An average sized plant, 170,000 kkg/year, was selected (plant sizes range from 63,500 to 250,000 kkg per year).

Cost Variances

Size: Annual production of plants in this subcategory ranges from 63,500 to 250,000 kkg. Over this range, the total annual costs are assumed to be proportional to plant waste water discharge hydraulic load within the level of uncertainty that exists for the costs. Discharge hydraulic loads range from 50 to 220 liters per kkg of production. The typical plant annual costs for Level B are 2¢ per kkg. However, plant-supplied annual costs ranged from 1¢ to 9¢ per kkg.

Age: There is no evidence of plant age being a significant cost variance factor.

Location: Location in geographical areas where evaporation/percolation ponds could be utilized would conserve both capital expenditure and energy.

Cost Basis for Table

Operating year: 250 days

Waste water treated: 38,000 liters/day

TABLE 12

COST ANALYSIS FOR REPRESENTATIVE PLANT
(ALL COSTS ARE CUMULATIVE)

SUBCATEGORY Concrete Brick and Block (High-Pressure Autoclave Curing)

PLANT SIZE 170,000 METRIC TONS PER YEAR OF Products

		LEVEL				
		A (MIN)	B	C	D	E
INVESTED CAPITAL COSTS:						
TOTAL		0	3,000	6,000	9,000	200,000
ANNUAL CAPITAL RECOVERY		0	350	700	1,000	32,500
OPERATING AND MAINTENANCE COSTS:						
ANNUAL O & M (EXCLUDING POWER AND ENERGY)		0	2,000	5,500	7,000	34,000
ANNUAL ENERGY AND POWER		0	0	100	200	21,000
TOTAL ANNUAL COSTS		0	2,350	6,300	8,200	87,500
COST/METRIC TON of products		0	0.02	0.04	0.05	0.51
WASTE LOAD PARAMETERS (kg/metric ton of products)	RAW WASTE LOAD					
Suspended Solids	<0.035	<0.035	0.007	0.002–0.005	0	0
pH	<12.5	10–12	10–12	6–9	--	--

LEVEL DESCRIPTION:

A — No treatment
B — Pond settling of suspended solids
C — B plus pH adjustment with sulfuric acid
D — C plus recycle to aggregate piles and/or convection autoclaves, or total containments
E — Mechanical evaporation of wastewater

Capital

Settling pond:	$3,000	
pH adjustment:	$3,000	
Pipes & pumps for recycle:	$3,000	
Mechanical evaporation system:		$200,000

Operational Costs

Operator Costs	$16,000/yr
Acid Costs:	$0.055/kg of sulfuric acid
Maintenance (Level B,C,D)	2% of capital investment
Maintenance (Level E)	10% of capital investment
Taxes & Insurance	3% of capital investment
Electrical Power	$125/kw-yr
Steam Cost	$1/250,000 Kcal

LOW-PRESSURE STEAM CURING PLANTS

Low-pressure steam plants have at least an order of magnitude less waste water than that of high-pressure autoclave plants. Nine reported values range from 0 to 1,900 liters/day (0 to 500 gpd). Estimated treatment costs are given in Table 13 for a plant producing 60,000 kkg/year.

Cost Variances

Plant size, location and age are not judged to be significant factors in cost variance. Treatment costs should be proportional to waste water discharge hydraulic load, which was found to vary from 9 to 140 liters per kkg of production.

Basis for Costs in Table 13

Operating year: 250 days

Waste water treated: 1,900 liters/day

Capital

Pond Cost:	$1,000
pH adjustment:	$5,000
Mechanical Evaporation equipment:	$50,000
Pumps and pipe for recycle:	$2,500

TABLE 13

COST ANALYSIS FOR REPRESENTATIVE PLANT

(ALL COSTS ARE CUMULATIVE)

SUBCATEGORY Concrete Brick and Block (Low-Pressure Steam Curing)

PLANT SIZE 60,000 METRIC TONS PER YEAR OF Products

		LEVEL				
		A (MIN)	B	C	D	E
INVESTED CAPITAL COSTS:						
TOTAL		0	1,000	6,000	2,500	50,000
ANNUAL CAPITAL RECOVERY		0	100	700	300	8,200
OPERATING AND MAINTENANCE COSTS:						
ANNUAL O & M (EXCLUDING POWER AND ENERGY)		0	1,000	2,000	3,000	4,000
ANNUAL ENERGY AND POWER		0	0	100	200	1,000
TOTAL ANNUAL COSTS		0	1,200	2,800	3,500	13,200
COST/METRIC TON products		0	0.02	0.05	0.06	0.22
WASTE LOAD PARAMETERS (kg/metric ton of products)	RAW WASTE LOAD					
Suspended solids	<0.1	<0.1	0.0002-0.0005	0.0002-0.0005	0	0
pH	<12	10-12	10-12	6-9	-	-

LEVEL DESCRIPTION:

A — No treatment
B — Settling ponds for reduction of suspended solids
C — B plus pH adjustment with acid
D — B plus recycle to aggregate pile, or total containment
E — Mechanical evaporation of wastewater

Operating Costs

Operating Cost:	$1,000
Acid Costs:	$0.055/kg of sulfuric
Maintenance (Level B):	2% of capital investment
Maintenance (Level C):	10% of capital investment
Taxes and Insurance:	3% of capital investment
Electric power:	$125/kw-yr
Steam Cost:	$1/250,000 Kcal

CONCRETE PIPE

Cost information was available from 15 plants. Five plants have under 4,000 liters/day (900 gpd) waste water, while 7 others range between 60,000 liters/day (16,000 gpd) and 300,000 liters/day (80,000 gpd). Waste water volumes are not available for the other three plants. The amounts of waste water depend on:

- Water use practices in the plant. This includes amount of water used for floor washdown, central mixer washout, transport bucket cleaning and various miscellaneous uses such as hydrostatic testing and form washoffs.

- The amount of waste water recycled.

Costs have been developed for two cases:

(1) Plants with small volumes of waste water (hydraulic load about 5 liters per kkg of production).

(2) Plants with relatively large volumes of waste water (hydraulic load about 1,100 liters per kkg of production).

Since plants with small waste water volumes rarely treat their effluents, cost estimates for treatment are based on model facilities. For the plants with relatively large volumes of waste water, costs are based on supplied data.

The waste water hydraulic loads generated by these plants ranged from 0.2 to 9,000 liters per kkg of production, with an average of 174 liters per kkg. The costs were developed for two representative plants, one below this average, and the other above this average. The principal treatment cost scaling factor is the waste water volume. Hence, to apply the costs contained herein to the entire industry subcategory, reference must be made to the nonconsumptive water use distribution shown in Figure 5 in Section V.

Plants With Small Waste Water Volumes

The cost estimates of a modelled treatment facility for a waste water volume of 4,000 liters/day are given in Table 14.

Cost Variance Factors

Treatment costs for waste water from concrete pipe plants depend heavily on the waste water volume. There appears to be no correlation with plant location or age.

Cost Basis for Table 14

Operating year: 250 days

Waste water treated: 4,000 liters/day

Capital

3 - concrete settling basins (4 sq m each):	$3,000
1 - oil skimmer:	1,000
--- miscellaneous ditches and piping:	1,000

Operating Costs

Pond cleaning	$200
Acid	150
Labor	2,000
Power costs	50
Taxes and insurance	150

Plants With Larger Waste water Volumes

One concrete pipe plant is able to discharge into a sewer system without treatment. Six others with relatively large waste water volumes are currently treating their waste water prior to discharge. Cost estimates are given in Table 15.

Cost Variance Factors

Cost is principally related to waste water volume, see distribution data of Section V, Figure 5.

Cost Basis For Table 15

Level B - Both capital and operating costs are based on values supplied by plants.

TABLE 14

COST ANALYSIS FOR REPRESENTATIVE PLANT

(ALL COSTS ARE CUMULATIVE)

SUBCATEGORY Concrete Pipe (1)

PLANT SIZE 45,000 METRIC TONS PER YEAR OF Products

PLANTS HAVING SMALL WASTEWATER VOLUMES

		LEVEL				
		A (MIN)	B	C	D	E
INVESTED CAPITAL COSTS:						
TOTAL		0	5,000	50,000		
ANNUAL CAPITAL RECOVERY		0	600	8,150		
OPERATING AND MAINTENANCE COSTS:						
ANNUAL O & M (EXCLUDING POWER AND ENERGY)		0	2,500	4,000		
ANNUAL ENERGY AND POWER		0	50	1,000		
TOTAL ANNUAL COSTS		0	3,150	13,150		
COST/METRIC TON of Pipe		0	0.07	0.29		
WASTE LOAD PARAMETERS (kg/metric ton of products)	RAW WASTE LOAD					
Suspended solids	0.01–3.0	0.01-3.0	0.0003	0		
Oil and grease	< 0.001	<0.001	0.0001	0		
pH	< 12.0	10-12	6-9	-		

LEVEL DESCRIPTION:

A — No treatment

B — Settling pits to remove suspended solids, oil and grease pit and skimmer, and manual pH adjustment with acid

C — Mechanical evaporation of wastewater

TABLE 15

COST ANALYSIS FOR REPRESENTATIVE PLANT

(ALL COSTS ARE CUMULATIVE)

SUBCATEGORY Concrete Pipe (2)

PLANT SIZE 90,000 METRIC TONS PER YEAR OF Products

PLANTS HAVING LARGE WASTEWATER VOLUMES

		LEVEL				
		A (MIN)	B	C	D	E
INVESTED CAPITAL COSTS:						
TOTAL		0	100,000	125,000	500,000	
ANNUAL CAPITAL RECOVERY		0	13,000	16,250	81,400	
OPERATING AND MAINTENANCE COSTS:						
ANNUAL O & M (EXCLUDING POWER AND ENERGY)		0	9,500	12,000	50,000	
ANNUAL ENERGY AND POWER		0	500	6,250	100,000	
TOTAL ANNUAL COSTS		0	23,000	34,500	231,400	
COST/METRIC TON of pipe		0	0.26	0.38	2.57	
WASTE LOAD PARAMETERS (kg/metric ton of pipe)	RAW WASTE LOAD					
Suspended solids	0.02–0.06	0.02–0.06	0.013	0.007	0	
Oil and grease	0.07	0.07	0.004	0.002	0	
pH	<12.2	10-12	6-9	6-9	0	

LEVEL DESCRIPTION:

A — No treatment

B — Settling ponds to reduce suspended solids, oil and grease pit and skimmer, instrumented pH control, and water quality monitoring

C — Level B plus partial recycle of wastewater

D — Mechanical evaporation of wastewater

Level C - Capital costs are the same as Level B plus piping and pumps. Annual O & M is the same as Level B plus $8,250 additional costs for labor and energy.

Level D - Based on estimated costs for mechanical evaporation of 400,000 liters/day of waste water.

PRECAST AND PRESTRESSED PRODUCTS

The plants making precast and prestressed concrete products have a wide variation in waste water hydraulic load, 9 to 370 liters per kkg of product. Plant size varies from 1,800 to 227,000 kkgs of annual production. Table 16 summarizes the cost estimates for a 23,000 kkg/year plant with a waste water volume of 19,000 liters per day.

Cost Variances

Treatment costs are principally related to volume of waste water treated. Generally, the Level B values of Table 16 are conservative. Plants significantly larger than 23,000 kkg/year production will have somewhat lower costs per kkg than the value shown. Twenty-seven cents per ton is a valid cost for plants of 23,000 kkg per year and smaller. Plant age is not a significant factor for cost variance. Plant location becomes important for onsite disposal of wastewater through percolation or evaporation.

Cost Basis for Table 16

Production year: 250 days

Waste water treated: nominally 19,000 liters/day

Level B - Values were taken from cost information supplied by plants.

Level C - Costs for Level C include mechanical clarification equipment plus additional settling and pH adjustment. These costs were supplied by several plants using this treatment system and have been scaled to this plant size.

TABLE 16

COST ANALYSIS FOR REPRESENTATIVE PLANT

(ALL COSTS ARE CUMULATIVE)

SUBCATEGORY Precast and Prestressed Products

PLANT SIZE 23,000 METRIC TONS PER YEAR OF Products

		LEVEL				
		A (MIN)	B	C	D	E
INVESTED CAPITAL COSTS:						
TOTAL		0	11,000	11,600	100,000	
ANNUAL CAPITAL RECOVERY		0	1,300	1,400	16,300	
OPERATING AND MAINTENANCE COSTS:						
ANNUAL O & M (EXCLUDING POWER AND ENERGY)		0	4,900	14,200	20,000	
ANNUAL ENERGY AND POWER		0	50	350	10,000	
TOTAL ANNUAL COSTS		0	6,200	15,950	46,300	
COST/METRIC TON products		0	0.27	0.69	2.01	
WASTE LOAD PARAMETERS (kg/metric ton of products)	RAW WASTE LOAD					
Suspended solids	12	12	0.013	0.007	0	
Oil and grease	<0.1	<0.1	0.0015	0.0015	-	
pH	10-12	10-12	6-9	6-9	-	

LEVEL DESCRIPTION:

A — No treatment

B — Settling ponds for removal of suspended solids plus pH adjustment

C — Mechanical clarification systems plus additional settling tanks, plus pH adjustment prior to discharge

D — Mechanical evaporation of wastewater

PERMANENT READY-MIXED CONCRETE PLANTS

The manufacture of ready-mixed concrete generates both waste water and solid waste. Since concrete will harden if left in mixers, trucks, conveying buckets or other containers even for a few hours, it is necessary to dispose of waste concrete rapidly and to remove all residual material, normally through washing. This washwater is then usually treated to remove the suspended aggregate and cement. Approximately 94 per cent of all surveyed ready-mixed concrete plants currently have suspended solids treatment facilities. These treatment facilities vary greatly as to their size, complexity, efficiency, and costs. If properly designed and sized, all of the employed treatment technologies will reduce suspended solids levels to below 50 mg/liter. An estimated 1 to 2 per cent of the plants are using acid to reduce pH to 6 to 9.

Types of Systems for Removal of Suspended Solids

Although treatments used for suspended solids removal vary in detail, most of them fall into one of the following:

(1) Earthen ponds - These may be natural low spots, pits, abandoned quarries or ponds. They may be used singularly or in series. They are more likely to be used where land is plentiful.

(2) Concrete tanks or ponds - These systems are generally used where land is more expensive and less available. Settled solids can be easily removed from these systems by crane or clamshell.

(3) Sloped slab system - The sloped slab system is an aggregate separation system. The sloped bottom makes it possible to remove settled solids with a front-end loader or other equipment.

(4) Mechanical clarification systems - These systems separate solids from waste water. There are a variety of drag chain, screw, and screen treatment units in service. According to industry sources, they represent about 3 per cent of the treatment facilities used.

(5) Specialized mechanical clarification systems - Several systems were found that currently recover all solid wastes and have no discharge of waste water. They represent less than 0.1 per cent of the total treatment systems. These specialized systems differ from

mechanical clarification systems primarily in their handling and disposal of cement fines.

Costs for Specific Treatment Systems

A summary of costs for two plant sizes is given in Tables 17 and 18. Levels A through G represent treatment systems currently used. Level H is the costs for mechanical evaporation of excess waste water in some treatment systems.

Level I represents a total recycle system currently used by one company. All waste solids and waste water are recycled to produce new batches of concrete. This approach shows promise for the future. There are several features that restrict its current widespread use. These features include high initial capital costs, labor costs, and energy costs, extensive R&D and quality control expenditures, and regulations on concrete preparation and composition currently specified by American Society for Testing and Materials (ASTM), American Concrete Institute (ACI), the state highway departments, state building authorities and federal agencies.

Treatment systems B, D and F can also achieve no discharge of process waste water pollutants by various mechanisms. These mechanisms include reuse of truck washout water, evaporation/percolation ponds, reuse of waste water as concrete mix water, and use of excess waste water for aggregate moisture control.

To determine costs from one size plant to another, the following scale factors were used: 1.0 for settling ponds, 0.8 for sloped slab basins, and 0.6 for evaporation, mechanical clarification, total recycle and pH adjustment.

Cost Components and Variances

The costs may be broken down into contributions from individual components such as land cost, pH adjustment costs, solid waste disposal costs, labor costs, and reuse or resale values for recovered aggregate. The treatment costs vary with truck utilization, value of land, solid waste load, solid waste disposal method, amount of operating labor, and recycle level for the waste water.

The relative costs of each treatment component and the variance factors involved are discussed in the following subsections.

TABLE 17

COST ANALYSIS FOR REPRESENTATIVE PLANT

(ALL COSTS ARE CUMULATIVE)

SUBCATEGORY Permanent Ready-Mixed Concrete (1)

PLANT SIZE 39,300 cubic meters ~~XXXXXXXXXX~~ PER YEAR OF Concrete

		A (MIN)	B	C	D	E	F	G	H	I
INVESTED CAPITAL COSTS:										
TOTAL		0	4,200	7,600	14,300	17,700	34,000	37,400	68,000	47,500
ANNUAL CAPITAL RECOVERY		0	500	900	1,720	2,100	5,530	6,080	11,000	9,420
OPERATING AND MAINTENANCE COSTS:										
ANNUAL O & M (EXCLUDING POWER AND ENERGY)		0	3,400	4,100	3,720	3,820	3,350	3,520	10,160	23,290
ANNUAL ENERGY AND POWER		0	100	100	260	360	160	360	7,280	6,780
TOTAL ANNUAL COSTS		0	4,000	5,100	5,700	6,280	9,140	9,960	28,440	39,490
COST/CUBIC METERS of Concrete		0	0.10	0.13	0.145	0.16	0.23	0.25	0.72	1.00
WASTE LOAD PARAMETERS (kg/cubic meter of concrete)	RAW WASTE LOAD									
Suspended solids	35	<35	0.001	0.001	0.001	0.001	0.001	0.001	0	0
pH	10-12	10-12	10-12	6-9	10-12	6-9	10-12	6-9	N.A.	N.A.

LEVEL DESCRIPTION:

A — No treatment
B — Pond settling of suspended solids, no aggregate recovery – no pH adjustment
C — Same as Level B plus pH adjustment
D — Sloped slab system – recovery of aggregate, partial recycle of wastewater, no recovery of cement fines and no pH adjustment
E — Same as Level D plus pH adjustment
F — Mechanical clarification system, recovery of aggregate – partial recycle of wastewater, no recovery of cement fines, no pH adjustment
G — Same as Level F plus pH adjustment
H — Same as Level F plus mechanical evaporation of excess wastewater
I — Total recycle of wastewater with recovery and reuse of aggregates and cement

TABLE 18

COST ANALYSIS FOR REPRESENTATIVE PLANT
(ALL COSTS ARE CUMULATIVE)

SUBCATEGORY Permanent Ready-Mixed Concrete (2)

PLANT SIZE 75,000 cubic meters PER YEAR OF Concrete

		A (MIN)	B	C	D	E	F	G	H	I
INVESTED CAPITAL COSTS:										
TOTAL (1972 Prices)		0	8,000	13,000	25,000	30,000	50,000	55,000	100,000	70,000
ANNUAL CAPITAL RECOVERY		0	950	1,530	2,950	3,500	8,150	8,950	16,300	13,900
OPERATING AND MAINTENANCE COSTS:										
ANNUAL O & M (EXCLUDING POWER AND ENERGY)		0	6,500	7,500	7,050	7,200	4,950	5,200	15,000	34,350
ANNUAL ENERGY AND POWER		0	Neg.	Neg.	500	700	500	700	10,500	10,000
TOTAL ANNUAL COSTS		0	7,450	9,030	10,500	11,400	13,600	14,850	41,800	58,250
COST/CUBIC METER of Concrete		0	0.10	0.12	0.14	0.15	0.18	0.20	0.56	0.78
WASTE LOAD PARAMETERS (kg/cubic meter of concrete)	RAW WASTE LOAD									
Suspended solids	35	<35	0.001	0.001	0.001	0.001	0.001	0.001	0	0
pH	10-12	10-12	10-12	6-9	10-12	6-9	10-12	6-9	N.A.	N.A.

LEVEL DESCRIPTION:

A — No treatment
B — Pond settling of Suspended Solids, no aggregate recovery
C — Same as Level B plus adjustment of pH
D — Sloped slab system - recovery of aggreage - partial recycle of wastewater - no recovery of cement fines - no pH adjustment
E — Same as Level D plus pH adjustment
F — Mechanical clarification system - recovery of aggregate fines - no pH adjustment
G — Same as Level F plus pH adjustment
H — Same as Level F plus mechanical evaporation of excess wastewater
I — Total recycle of wastewater with recovery and reuse of aggregates and cement

Correlation of Plant Size With Number of Trucks

The cost estimates of waste treatment facilities are based on a waste quantity per truck basis. Washwater and solid wastes volumes were found to be more easily and accurately estimated from the number of operating trucks than from the production figures. To establish a conversion to production a correlation was necessary for the average amount of concrete hauled per day per truck. This is primarily a function of the average number of trips per day taken by each truck. Figure 25 gives the distribution of the trips per day taken by trucks from 376 permanent ready-mixed plants for which data are available. Based on this information, the average number of trips per day per truck is approximately 2.5. Assuming a 6 cubic meter average capacity, this is 15 cu m of concrete hauled per day per truck. On this basis, a 5-truck plant would have an estimated production of 75 cu m/day. Similarly, a 20-truck plant would have 300 cu m/day production and a 40-truck plant, an estimated 600 cu m/day production.

Figure 25 shows the fifty per cent point to be about 2.5 trips per day per truck. Approximately 5 per cent of the plants on either end of this curve would be expected to vary from this relationship by over a factor of 2. The other ninety per cent of the plants would have variations below this level with the central 50 per cent of plants varying by a factor of approximately 1.4.

Plant Size

Figure 26 summarizes overall waste water treatment annual operating costs as a function of plant size and treatment technology employed. The values shown include all pertinent costs except off-site disposal of solid wastes.

Costs for earthen and concrete pond treatment systems are represented by a single curve which fits both systems. The increase in costs for the smaller plants is due to labor needed for manual acid addition and pH monitoring. The cost of ponds for settling of suspended solids is not sensitive to plant size --- 75 cu m/day plants have almost the same cost per production unit as 600 cu m/day plants.

Disposal of solids by ponding creates solid waste handling problems, when the pond has to be dredged. Ponds do not require large amounts of labor. Small sloped slab systems require more labor than ponds and therefore have higher operating costs. However, above a certain size, the sloped slab systems have lower operating costs than ponds.

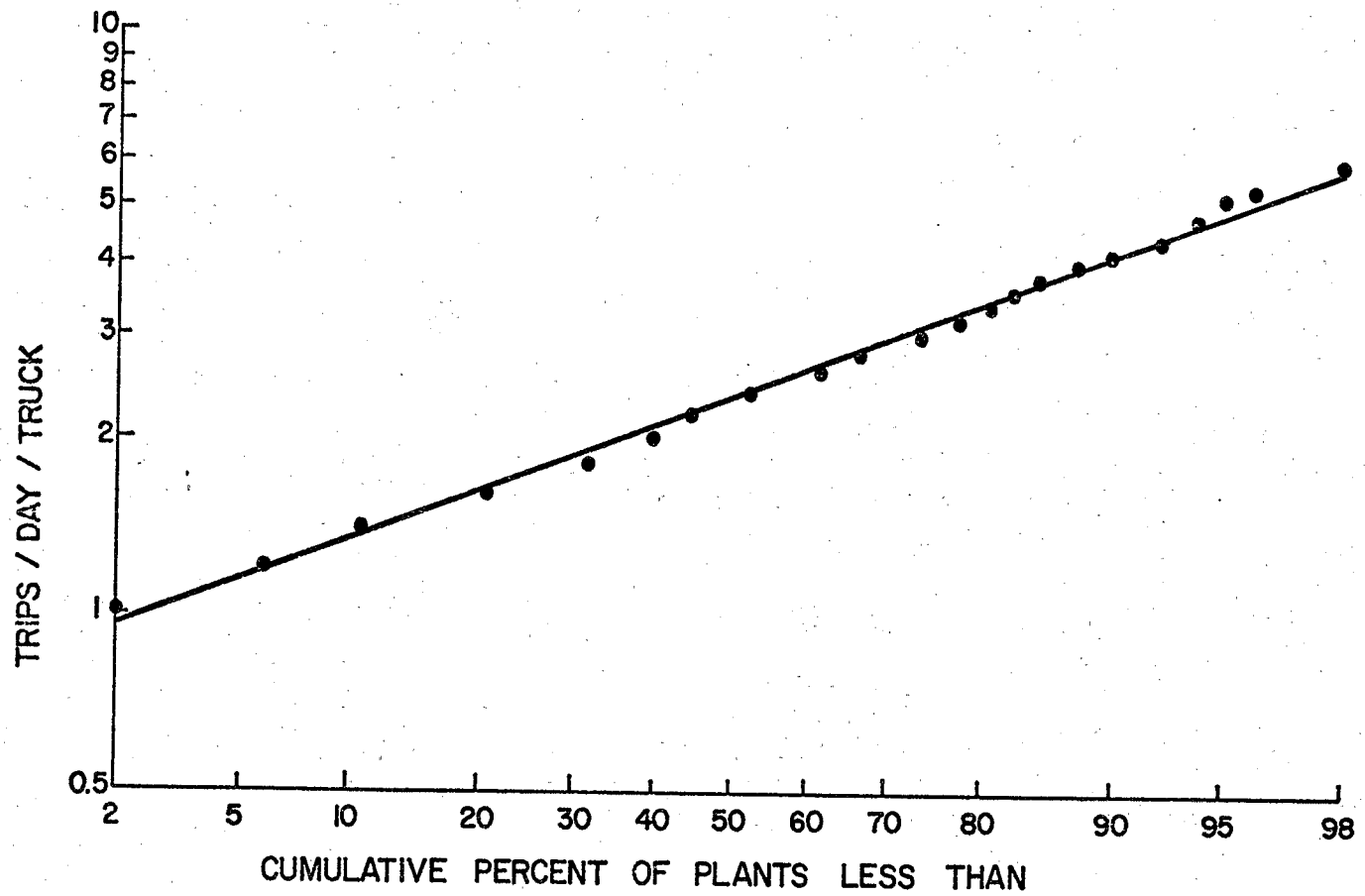

FIGURE 25
DISTRIBUTION OF LOADS OF READY-MIXED CONCRETE PER DAY PER TRUCK
(DATA FROM 376 PLANTS)

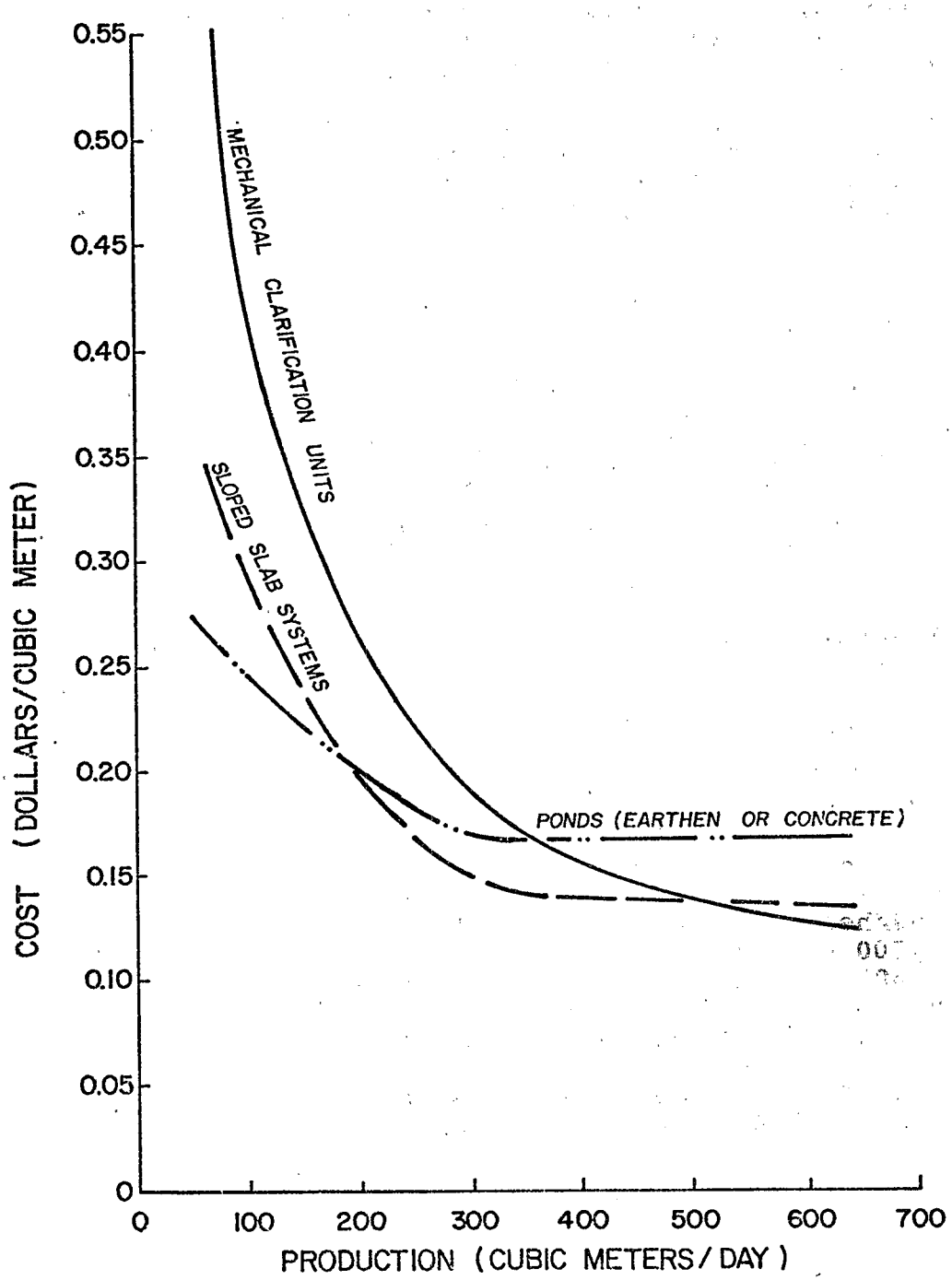

FIGURE 26
ANNUAL OPERATING COSTS FOR WASTEWATER TREATMENT AT READY-MIXED CONCRETE PLANTS

Mechanical clarification systems are more sensitive to plant size than either ponds or sloped slab systems. This sensitivity is caused by two basic factors:

(1) Costs for mechanical clarifiers are directly proportional to the 0.6 power of plant size. Ponds are almost directly proportional in cost to plant size. Sloped slab systems are scaled to the 0.8 power of plant size.

(2) Labor costs do not vary with size of mechanical clarifier units.

Costs in Figure 26 include the following components:

(1) Annualized capital recovery (depreciation plus interest) plus annual operating expenses,

(2) Interest on land utilized for treatment,

(3) pH control of effluent,

(4) Returned concrete is 3% of average annual production, and

(5) On-site disposal of all solid materials not reused or sold.

Land Costs

Land costs used include only interest costs on the land. Capital costs for land for a concrete plant may vary from $2500/hectare ($1000/acre) to more than $3,700,000/hectare ($1,500,000/acre), one value of $3,460,000/hectare ($1,400,000/acre) for a choice urban location was reported. Since land is rarely considered depreciable property and the area occupied by the treatment facilities may be converted to other use at a later date, only interest costs are included. In general, interest costs for land are of the order of $0.02/cubic meter, as shown below.

Interest Costs for Land for Treatment Facilities
(based on a 300 cubic meter/day production plant)

Treatment Used	Treatment Area, Hectares	Cost At $250,000/ Hectare	Interest (10%) Cost $/YR	Interest Cost $/cubic meter
Pond	0.060	15,000	1,500	0.02
Concrete ponds	0.036	9,000	900	0.01
Sloped slab system	0.070	17,000	1,750	0.02
Mechanical clarification unit	0.050	12,500	1,250	0.02

Off-Site Sludge Disposal Costs

Waste concrete sent to settling ponds poses a sludge handling and disposal problem of the entire wasteload of aggregate and cement when the ponds are dredged. Sloped slab systems and mechanical clarifiers handle smaller amounts of these solids on a routine basis.

The dredged waste from ponds may be stored on-site if land is available. However, off-site disposal for these large amounts of sludge is generally used.

Using an estimate of $2.00/cubic meter for on-site disposal and $5.00/cubic meter for off-site disposal, the increased costs for off-site sludge disposal are shown in the following table.

Plant Size (cu m/day)	Total Waste Load (cu m/yr)*	Additional Off-Site Disposal Costs (dollars/yr)	Additional Off-Site Disposal Costs (dollars/cu m)
		1 per cent waste concrete returned to ponds	
75	575	1,725	0.092
300	2,264	6,792	0.090
600	4,528	13,504	0.090
		3 per cent waste concrete returned to ponds	
75	1,011	3,073	0.162
300	4,008	12,024	0.160
600	8,016	24,048	0.160

*wet basis

Large quantities of returned concrete may be disposed of in a more cost effective manner by using aggregate recovery systems instead of ponds. The costs given above for disposing of returned concrete at the rate of 3 per cent of production gives an off-site solid waste disposal cost of $0.16/cubic meter greater than for on-site disposal.

Effect of Aggregate Recovery on Operating Costs

Some sloped slab and most mechanical clarification systems separate the aggregate from the cement sludge. This segregation is usually not good enough for complete reuse of the aggregate in new concrete. The coarse aggregate may be reusable when the coarse and fine aggregate are separated. Where the coarse and fine aggregate are not separated, as in all slab systems and many mechanical clarification systems, the mixture may be sold as fill material.

Table 19 gives the value of recovered aggregate from mechanical clarification system, assuming $2.00/cubic meter. The sludge disposal costs are less than for pond systems. A comparison (based on a 300 cubic meter/day plant) of the costs differentials between mechanical clarification systems and ponds is shown below:

Table 19 Value of Recovered Aggregate and Disposal Cost of Cement Sludge - Based on a 300 cu m day plant

Type of Solid Waste	Amount Recovered cu m/yr	Sale(*) Value $/yr.	Sale(*) Value $/cu m	Disposal Cost On-Site** $/yr.	Disposal Cost Off-Site** $/yr.	Disposal Cost On-Site** $/cu m	Disposal Cost Off-Site** $/cu m
			1 percent returned concrete				
Coarse Aggregate (dry basis)	1,386	2,772	0.037	-	-	-	-
Fine Aggregate (dry basis)	992	1,984	0.026	-	-	-	-
Cement Sludge	865	-	-	1,730	4,325	0.023	0.058
			3 percent returned concrete				
Coarse Aggregate (dry basis)	2,455	4,910	0.065	-	-	-	-
Fine Aggregate (dry basis)	1,757	3,514	0.047	-	-	-	-
Cement Sludge	1,532	-	-	3,064	7,660	0.041	0.102

*Value of coarse aggregate, $2.00/cu m; Value of fine aggregate, $2.00/cu m
**$2/cu m for on-site disposal; $3/cu m additional cost for off-site disposal.

System	Sludge Disposal Cost, $/yr Off-site	Reclaimed Aggregate Value $/yr	Net Value $/yr	Cost Differential $/yr ($/cu m)
		1 per cent returned waste concrete		
Pond	11,342	0	-11,342	
				11,773 (0.157)
Recover. Aggreg.	4,325	4,756	+431	
		3 per cent returned waste concrete		
Pond	20,080	0	-20,080	
				20,844 (0.278)
Recover. Aggreg.	7,660	8,424	+764	

The cost differential for 1 per cent returned concrete between pond treatment with off-site sludge disposal and the recovered aggregate systems with off-site cement sludge disposal for a 300 cu m/day plant is $11,773/yr. For 3 per cent returned concrete, the cost differential is $20,844/yr.

Specialized mechanical treatment systems also recover cement fines as well as aggregate. Two such systems are now being used:

(1) The cement fines are maintained in suspension and returned to the system. Plants 7729 and 7732 are now using this technology.

(2) The dewatered aggregate containing cement fines is sold as a road base. Plants 7525, 7526, 7527, 7528, 7529, 7530, and 7531 now use this system.

Labor Costs

Generally most treatment systems do not require a full time operator or supervisor. Earthen ponds require almost no attention except when accumulated solids are removed periodically. Concrete pond and sloped slab systems also involve low labor costs except for cleaning purposes. Mechanical clarification units require somewhat more maintenance and servicing than the other treatment systems

but usually need no full time operator. Manual pH adjustment will increase labor costs, particularly for the smaller plants. Large plants will most likely install automated systems and eliminate additional labor. The effect of labor on the treatment operating costs is shown by the following:

Plant Size (cu m/day)	% of Man Assigned	Cost ($/yr)	Cost ($/cu m)
75	25	4,000	.21
75	50	8,000	.43
75	100	16,000	.85
300	25	4,000	0.05
300	50	8,000	0.11
300	100	16,000	0.21
600	25	4,000	0.03
600	50	8,000	0.05
600	100	16,000	0.11

pH Adjustment Costs

Ready-mixed concrete waste water generally has a pH of 10 to 12. This can be reduced to the range of 6 to 9 prior to discharge through addition of a mineral acid.

Figure 27 shows that approximately 30 liters of acid are needed to make this reduction in the 37,850 liters (10,000 gallons) of waste water from a 75 cu m/day plant. The waste water volume at 50 percentile level is 6,440 liters per day. The cost to treat this amount of waste water is 1¢ per cubic meter of concrete produced, assuming the 1972 price of 5.5¢/kg for sulfuric acid. Small plants could add acid and check pH manually so that capital costs would be negligible. Labor costs will increase rapidly and will have to be balanced against capital expenditures. Larger plants would install automatic pH adjustment equipment. Costs would be of the order of $5,000. For large plants, total acid treatment costs should be a maximum of $0.02/cu m if no recycle of waste water is practiced. If part of the waste water is recycled, then pH control costs should drop to approximately $0.01/cu m of concrete produced. A $0.10/cu m operating cost for acid treatment was assumed for plants of 75 cu m/day or less production.

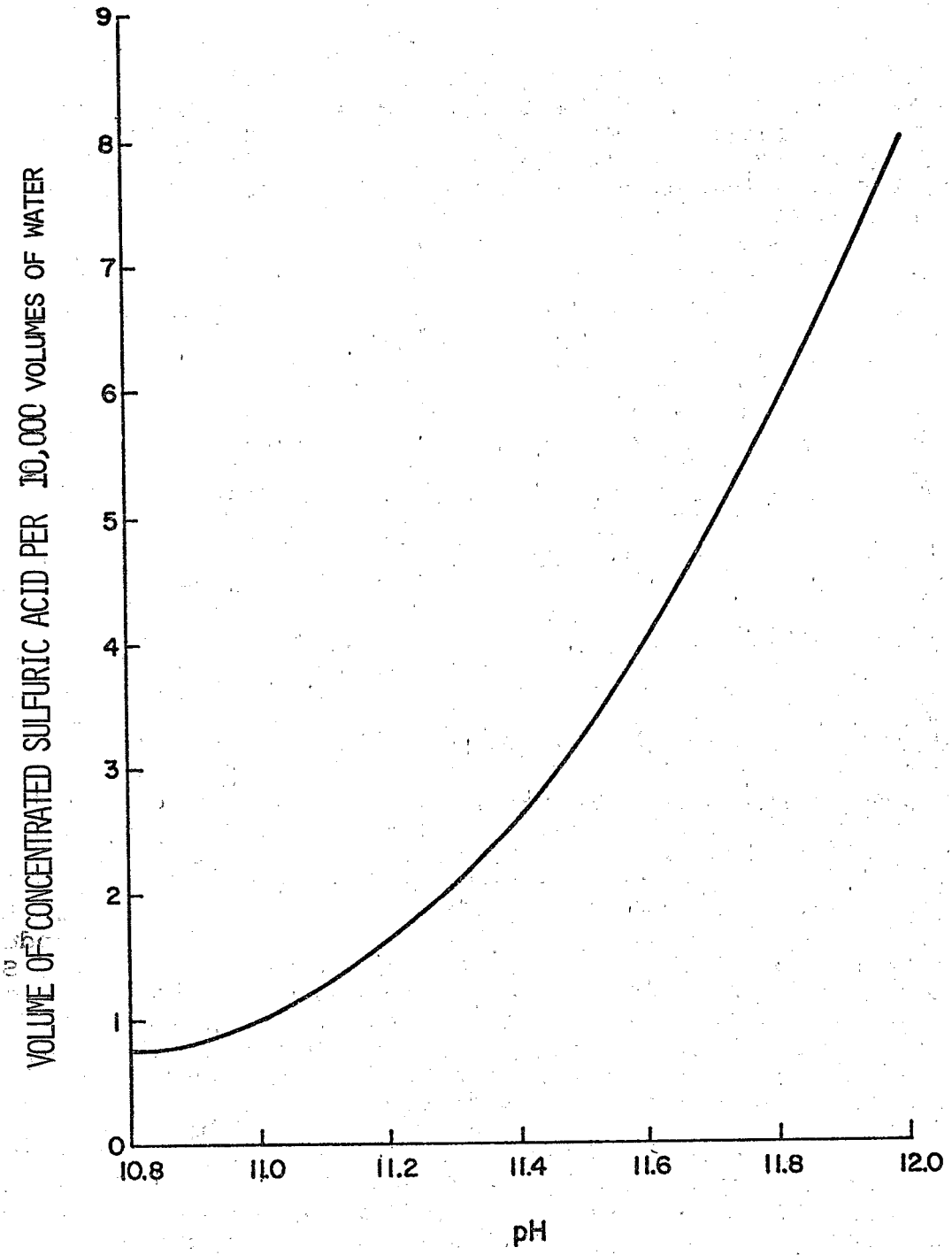

FIGURE 27
AMOUNT OF ACID REQUIRED FOR
NEUTRALIZATION TO pH 7 OF CONCRETE WASTEWATER
(DEVELOPED FROM FIELD AND LAB TESTS)

Assumptions Used in Calculating Costs for Permanent Ready-Mixed Concrete Waste water Treatment

The following pages give the basis for cost calculations for four treatment systems: earthen ponds, concrete ponds, sloped slab systems and mechanical clarification systems. Waste water volumes are calculated from cumulative percentile curves given in Section VII using the 50th percentile values. Data from over 400 plants were used in plotting these curves.

Solid wastes were estimated as follows:

(1) Waste concrete returned from trucks to the treatment system is assumed to be 1 per cent of annual production.

(2) Solids from truck washout are estimated to be 59.4 kg per cubic meter of truck volume per washing. Truck washing averages 1.5 times per day. Average truck size was taken as 6.1 cubic meters.

(3) Solids from truck washoff are estimated to be 11.4 kg per day.

(4) Solids from washing one 4 cubic meter central mixer were estimated as 227 kg/day.

Since washwater volume and solid wastes were found to be more a function of operating trucks than production capacity, calculations are based on number of trucks. A value of 15 cubic meters of concrete production per operating truck per day has been used throughout these calculations to estimate plant size.

Cost calculations for treatment options are based on:

(1) Treatment technology used - earthen pond, etc.

(2) 50th percentile water volume

(3) Three plant sizes, 5 trucks (75 cu m/day), 20 trucks (300 cu m/day) and 40 trucks (600 cu m/day)

(4) 24-hour settling time required.

(5) Acid requirements for pH adjustment are taken from Figure 26.

(6) Densities and weights supplied by the NRMCA are shown below.

Average Density Values

Concrete Composition (kg per cu m)

Water	178
Cement	297
Sand	758
Coarse aggregate	1,144
Total density	2,377

Densities

Coarse aggregate (dry)	1,733 kg/cu m
Sand (inundated)	1,604 kg/cu m
Sand (6% moisture)	1,364 kg/cu m
Combined sand and aggregate	2,406 kg/cu m
Cement slurry (after initial drying)	1,443 kg/cu m

Waste water Volumes - 50 Percentile Level

5 trucks

Truck washout - 5 trucks x 946 liters/day	4,730 liters/day
Truck washoff - 5 trucks x 246 liters/day	1,230 liters/day
Central mixer washout - 1 x 475 liters/day	475 liters/day
Total Daily Waste water	6,435 liters/day

Similar values for 20 and 40 trucks are 25,740 liters/day and 51,400 liters/day, respectively.

Solid Wastes

Solid wastes are calculated for two situations:

(1) Total disposal of all solid wastes

(2) Recovery of all aggregate and disposal of cement fines

Solid Waste-Total Disposal

5 trucks (6.1 cu m capacity)

Truck washout solids -

5 trucks x 59.4 kg/cu m/wash x 6.1 cu m/truck x 1.5 washes per day = 2,725 kg

Truck washoff solids -

5 x 11.4 = 57 kg

Central mixer washout solids -

3.8 cu m x 59.4 kg/cu m = 227 kkg

1% waste concrete -
2377 kg/m³ x 75m³ x 0.01 = 1781 kg

Total 4,790 kg

Similarly, total solid waste values for 20 and 40 trucks are 18,478 kg and 36,956 kg.

Solid Wastes - Total Aggregate Recovery - Disposal of Cement Fines

5 trucks (6.1 cubic meter capacity)

Total solids	4,790 kg/day (dry basis)
Total aggregate recovered	4,143 kg/day (dry basis)
Waste cement	647 kg/day (dry basis)

Option A - Earthen Settling Ponds - Direct Dumping

5 trucks

Basis:	(1)	Waste water volume	6,440 liters/day
	(2)	Production rate	75 cu m/day
	(3)	Solid wastes	4,790 divided by 0.85 (85% solids) = 5,635 kg/day (wet basis)
	(4)	Waste density	2,400 kg/cu m

Capital Costs

Pond size: 0.03 ha

Pond cost: $190,000/ha

Operating Costs

Pond cleaning costs - $1.50/cu m
Maintenance @ 2% of capital
Taxes and insurance @3% of capital
Costs developed similarly for 20 and 40 truck systems.

Option B - Concrete Settling Pond System - Direct Dumping

5 trucks

Basis: same as Option A

Capital Costs

Pond size: 0.0006 ha

Concrete cost: $18/cu m

Operating Costs

Pond cleaning and on-site disposal of solids - $2.00/cu m
Maintenance @ 2% of capital investment
Taxes and insurance @ 3% of capital investment
Costs developed similarly for 20 and 40 truck systems.

Option C - Sloped Slab Settling System - Recycle System - Aggregate Sold at No Profit

5 trucks

Basis:	(1)	Waste water volume	6,440 liters/day
	(2)	Production rate	75 cu m/day
	(3)	Solid wastes:	
		(a) aggregate	4,143 kg/day (dry basis)
		(b) waste cement	1,294 kg/day (wet sludge basis)
	(4)	Aggregate sold as landfill	no profit
	(5)	Waste density	1,444 kg/cu m

Capital Costs

Concrete system cost: $10,000

Pumps and piping: $3,000

Operating Costs

Pond cleaning and on-site cement disposal: $2.00/cu m
Labor: $4,000
Maintenance @ 5% of capital investment
Taxes and insurance @ 3% of capital investment
Power: $135/kilowatt - yr

20 trucks

Capital Costs

Concrete system cost: $20,000

Pumps and piping: 5,000

Operating Costs

Same basis as for 5 truck plant except labor costs taken as $8,000/yr.

40 trucks

Capital Costs

Concrete system costs: $30,000

Pumps plus piping: 7,500

Operating Costs

Same basis as for 5 truck plant except labor costs taken as $16,000/yr.

Option D - Mechanical Clarification Units - Recycle System

Aggregate sold at no profit.

5 trucks

Basis:	(1)	Waste water volume	6,440 liters/day
	(2)	Production rate	75 cu m/day
	(3)	Solid wastes:	
		(a) aggregate	4,143 kg/day (dry basis)
		(b) waste cement	1,294 kg/day (wet basis)
		(c) waste density	1,444 kg/cu m

Capital Costs

Installed mechanical unit cost: $25,000

Operating Costs

Labor: $4,000
Maintenance @ 5% of capital investment
Power: $135/kilowatt-yr
Cement waste disposal: $2.00/cu m
Taxes and insurance @ 3% of capital investment

20 trucks

Capital Costs

Installed mechanical unit cost: $50,000

Operating Costs

Same basis as for 5 trucks

40 trucks

Capital Costs

Installed mechanical unit cost: $75,000

Operating Costs

Same basis as for 5 trucks.

Option E - Complete Recovery and Reuse of All Waste water and Solid Wastes

This system is used by only one or two companies. Costs supplied by one company show:

Capital Investment: $70,000

Operating Expenses: $45,700-$83,000

Capital and operating costs are reported to be relatively independent of plant size; i.e., a 600 cu m/day plant would have the same costs as a 300 cu m/day plant.

Portable Ready-Mixed Concrete Plants

Portable ready-mixed concrete plants are moved to the desired location and set up. During their time of operation at this site, the portable plant will have waste water volumes similar to a permanant plant. There are several differences from a permanent plant which are significant to treatment cost:

(1) Only the simplest of treatment technology will usually be employed. Earthen settling ponds will predominate. Concrete settling basins, sloped slab recovery systems and mechanical clarification units are rarely used.

(2) The temporary ponds are smaller than those for permanent facilities, since storage space for only several months accumulation of solid wastes load is required.

(3) Settling ponds are not usually dredged.

Estimated costs of waste water treatment facilities for portable ready-mixed concrete plants are given in Table 20.

Cost Variance

All capital and operating costs are directly proportional to plant size for Level B. For Levels C and D, the capital costs should vary as the 0.6 exponent of plant size. Plant age has no significance for a portable plant. Plant location may be significant in that some climates and local terrains make it possible to use evaporation/percolation ponds and eliminate much if not all of the waste water discharge.

Mobile Ready-Mixed Concrete Plants

All of the mobile ready-mixed concrete plants contacted discharge waste water to an evaporation/percolation area Therefore, there are no additional treatment costs for this subcategory.

TABLE 20

COST ANALYSIS FOR REPRESENTATIVE PLANT
(ALL COSTS ARE CUMULATIVE)

SUBCATEGORY Ready-Mixed Concrete (Portable Plants)

PLANT SIZE 75,000 Cubic Meters ~~XXXXXXXXXXXX~~ PER YEAR OF Concrete

		LEVEL				
		A (MIN)	B	C	D	E
INVESTED CAPITAL COSTS:						
TOTAL		0	5,000	50,000	100,000	
ANNUAL CAPITAL RECOVERY		0	600	8,150	16,300	
OPERATING AND MAINTENANCE COSTS:						
ANNUAL O & M (EXCLUDING POWER AND ENERGY)		0	1,400	9,700	20,000	
ANNUAL ENERGY AND POWER		0	100	500	10,000	
TOTAL ANNUAL COSTS		0	2,100	18,350	46,300	
COST/CUBIC METER of Concrete		0	0.03	0.24	0.62	
WASTE LOAD PARAMETERS (kg/cubic meter of concrete)	RAW WASTE LOAD					
Suspended solids	35	35	0.001	0.001	0	
pH	10-12	10-12	6-9	6-9	-	

LEVEL DESCRIPTION:

A — No treatment
B — Pond settling of suspended solids plus pH adjustment
C — Mechanical clarification unit plus pH adjustment
D — Mechanical evaporation of non-recycled wastewater (Level C plus evaporation)

SECTION VIII

ACKNOWLEDGEMENTS

This report was prepared by the Environmental Protection Agency on the basis of a comprehensive study of this industry by Versar, Inc. Special thanks are due Mr. Richard Kinch, Mr. James Berlow, Mr. Ralph Lorenzetti and Mr. Michael Kosakowski of EPA for their supervision of this project during the various stages of development. The efforts of Dr. Robert G. Shaver, Mr. Michael W. Slimak and Mr. Robert C. Smith of Versar, Inc. are appreciated.

Overall guidance and excellent assistance were provided by the senior staff of the Effluent Guidelines Division, particularly Mr. Robert B. Schaffer, Director and Mr. Walter J. Hunt, Chief, Inorganic Chemicals and Service Industries Branch.

Appreciation is also extended to the members of the Effluent Guidelines Support Staff for their aid in assembling, editing and reproduction of this report. Special acknowledgement in this respect is given to Ms. Kaye Starr, Ms. Nancy Zrubek, Ms. Carol Swann, Ms. Pearl Smith and Mrs. Alice Thompson.

Appreciation is extended to the following industry organizations and private companies for their assistance and cooperation in the production of this document:

American Concrete Institute
American Concrete Paving Association
American Concrete Pipe Association
American Concrete Pressure Pipe Association
Cellular Concrete Association
Centre Concrete Company
Conrock Corporation
Crider & Shockey, Inc.
Dravo Corporation
Erie-Strayer, Inc.
Gifford-Hill Co., Inc.
H.T. Campbell & Sons Co.
Houston Shell & Concrete
Interpace Corporation
Jadair Corporation
Jetomatic Systems, Inc.
Lone Star Industries, Inc.
Maloney Concrete

Massey Concrete
Material Service Corporation
Mobile Premix Concrete
National Concrete Burial Vault Association
National Concrete Masonry Association
National Precast Concrete Association
National Ready-Mixed Concrete Association
Prestressed Concrete Institute
Portland Cement Association
Reinforce Concrete Research Council
Rex Nord Division of Rex Industries
Smith, Monroe & Gray Engineers
Super Concrete Corporation
Texas Aggregates & Concrete Association
The Vince Hagan Company
Twin City Concrete
Underwood Builders Supply Company
Virginia Concrete

Appreciation is also extended to the many other companies who gave us invaluable assistance and cooperation in this program.

SECTION IX

REFERENCES

1. Akroyd, T.N.W., Concrete Properties & Manufacture, Pergamon Press, New York, 1962.

2. Blanks, R.F., & Kennedy, H.L., "The Technology of Cement and Concrete", Concrete Materials, Volume I, John Wiley & Sons, New York, 1955.

3. "Census of Manufactures", 1972, Bureau of the Census, U.S. Department of Commerce, U.S. Government Printing Office, Washington, D.C., MIC 72(p)-32B-2 through MIC 72(P)-32E-6.

4. Ferguson, P.M., Reinforced Concrete Fundamentals, 2nd ed., John Wiley & Sons, New York, 1967.

5. Gaynor, R.D., "Disposal of Wash Water and Returned Concrete", NRMCA Publication, June 8, 1971.

6. "Design & Control of Concrete Mixtures", 11th ed., Portland Cement Association Bulletin, July, 1968.

7. Godfrey, Robert Sturgis, Editor in Chief, Building Construction Cost Data 1975, 33rd annual ed., Robert Snow Means Company, Inc., Duxbury, Mass.

8. Harger, H.L., "A System for 100% Recycling of Returned Concrete: Equipment, Procedures & Effects on Product Quality", NRMCA Publication No. 150, March, 1975.

9. "Industrial Waste Study Report: Flat Glass, Cement, Lime, Gypsum, & Asbestos Industries", Sverdrup & Parcel & Associates, Inc., St. Louis, Missouri, July, 1971.

10. Kirk & Othmer, Encyclopedia of Chemical Technology, 2nd ed., Volume IV, John Wiley & Sons, New York, 1964.

11. Lauwereins, M.A., "Water Pollution-Chicago Style", Modern Concrete, May, 1971.

12. Mather, B., "New Concern Over Alkali-Aggregate Reaction", Presentation to the Joint NSGA-NRMCA Engineering Session, New Orleans, La., 28 January 1975.

13. Meininger, R.C., "Disposal of Truck Mixer Wash Water & Unused Concrete", NRMCA Publication No. 16, December, 1964.

14. Monroe, R.G., "Waste water Treatment Studies in Aggregate & Concrete Production", EPA-R2-73-003, February, 1973.

15. Murdock, L.J., and Blackledge, G.F., Concrete Materials & Practice, 4th ed., Edward Arnold Publishers Ltd., London, 1968.

16. Neville, A.M., Properties of Concrete, John Wiley & Sons, New York, 1973.

17. Orchard, D.F., Concrete Technology, 3rd ed., Volumes I and II, John Wiley & Sons, New York, 1973.

18. Perry, R.H., Chilton, C.H., Kirkpatrick, S.D., Chemical Engineering Handbook, 4th ed., McGraw-Hill, New York, 1969.

19. Richardson, J.G., Precast Concrete Production, Cement and Concrete Association, London, 1973.

20. Simons, E.N., Cement & Concrete Engineering, Frederick Muller, Ltd., London, 1964.

21. "Symposium Effect of Water Reducing Admixtures & Set Retarding Admixtures on Properties of Concrete", ASTM Special Technical Publication 226, 1959.

22. Taylor, W.H., Concrete Technology & Practice, 3rd ed., Angus & Robertson Ltd., London, 1969.

23. Troxell, G.E., Davis, H.E., Kelly, J.W., Composition & Properties of Concrete, 2nd ed., McGraw-Hill, New York, 1968.

24. U.S. Patent No. 3,885,985, "Additive for Improving Hydraulic Cement Compositions".

25. Waddell, J.J., Practical Quality Control for Concrete, McGraw-Hill, New York, 1962.

26. Walker, S., "Ready-Mixed Concrete", NRMCA Publication No. 120, April, 1966.

27. USGS, Department of the Interior, National Atlas, 1970, p. 97.

SECTION X

GLOSSARY

1. Accelerating Agent: Material added to concrete to accelerate its setting time and strength development.

2. Adsorption: The adhersion of a substance to the surface of a solid or liquid. Adsorption is often used to extract pollutants by causing them to be attached to such adsorbents as activated carbon or silica gel. Hydrophobic, or water-repulsing adsorbents, are used to extract oil from waterways in oil spills.

3. Admixture: Material, other than aggregate, cement, or water added in small quantities to concrete to produce some desired change in properties.

4. Aggregate, Coarse: Crushed stone which is retained on a Number 4 standard sieve.

5. Aggregate, Fine: Sand with a particle size smaller than a Number 4 standard sieve or approximately 0.6 cm (1/4 inch).

6. Aggregate, Lightweight: Aggregates such as expanded shale, cinder, clay, slate,pumice, scoria, perlite, vermiculite, and diatomite.

7. Aggregate, Heavyweight: Aggregate such as iron or steel particles, barite, limonite, magnetite and ilmenite.

8. Aggregate, Normalweight: Aggregates such as sand, gravel, and crushed stone.

9. Air-entraining Agent: Substance added to concrete materials before or during mixing to entrain air in the concrete to improve resistance to freezing and thawing exposure.

10. Batching: The weighing and proportioning of two or more raw materials which go into the manufacture of concrete products.

11. Baghouse: Chamber in which exit gasses are filtered through membranes (bags) which remove solids.

12. Block Equivalent: Standard unit of production of concrete block and brick, 20 x 20 x 41 cm, (8 x 8 x 16 inches).

13. Central Mixer: Rotary mixer used to mix concrete with an average capacity of about 4 cubic meters.

14. Central Mixer Plant: Permanent or portable ready-mixed concrete plant that prepares concrete in a central mixer then transfers it to a truck mixer or agitator for delivery.

15. Concrete, Heavyweight: Concrete made using aggregates such as barite, limonite, magnetite, ilmenite, and iron and steel particles. Produced primarily for nuclear applications.

16. Concrete, Insulating Lightweight: Concrete made using lightweight aggregates such as pumice, scoria, perlite, vermiculite, and diatomite.

17. Concrete, Lightweight: Concrete made using lightweight aggregates.

18. Curing, Atmospheric: Method of curing which uses ambient heat and humidity.

19. Curing, High Pressure or Autoclave: Method of curing block and brick in which loaded curing cars are placed into a large horizontal, cylindrically shaped autoclave, where high pressure steam is injected or convected for approximately 8 hours.

20. Curing, Hot Oil Convection: Special type of high pressure steam curing of block and brick where water is placed in a trough in an autoclave and hot oil heats the water to produce steam.

21. Curing, Low Pressure: Method of curing block and brick in which loaded curing cars are placed in a chamber or kiln where low pressure steam (less than 9.7 atm) is injected from perforated pipes for approximately 8-10 hours.

22. Curing, Spray: Method of curing in which products are sprayed with a fine mist of water.

23. Dry Batch Plant: Permanent or portable ready-mixed concrete plant that transfers weighed amounts of dry

aggregate and cement with a specific amount of water into a mixer truck for subsequent mixing.

24. Dispersing Agent: Material added to concrete to separate the individual suspended particles.

25. Friable: Term used to describe concrete made with an insufficient quantity of mix water that crumbles and breaks apart easily.

26. Form Releasing Agent: Oil sprayed onto forms prior to pouring or casting of the concrete to facilitate the separation of the concrete and form.

27. Grout: Mixture of cement and water or cement, sand, and water.

28. Hydration: Incorporation of molecular water into a complex molecule with the molecules of another substance, in this case cement.

29. Hydrostatic Testing: Testing of pipe or other vessel for strength and leak resistance by pressurization with a test liquid.

30. Mortar: Mixture of cement, lime, and sand used for bonding bricks and masonry.

31. Packerhead: A rapidly revolving and rising steel element which packs the concrete radially outward against a stationary form. The force with which the concrete is packed against the outside form compacts the concrete sufficiently so that the element can be raised as more concrete is added.

32. Portland Cement: A hydraulic cement resembling portland stone when hardened; made of pulverized calcined argillaceous and calcareous material; proper name for ordinary cement.

33. Precast Concrete Products: Describes the many types and varieties of concrete units which are cast in molds either in a factory or on the site, and are not built into the structure until they have fully hardened. Most of the larger precast units are made with steel reinforcing rods.

34. Pressure Pipe: Reinforced and prestressed concrete pipe that uses a permanent steel cylinder, which remains with the pipe, as a form.

35. Prestressed: Process of casting concrete with tensioned steel bars or cables embedded in the concrete.

36. Pretension: Prestressed concrete made by placing steel cables under tension in the form before the concrete is poured. Once the concrete has set, cured, and forms have been removed, the external tension is released from the steel cables. The cable retains internal stress due to the compression of the concrete around it.

37. Prime: The wetting of the mixing auger in a mobile concrete plant prior to a mix. This wetting prevents clogging of the mixing auger by wet sand during the mix.

38. Post-tension: Prestressed concrete made by placing cables in the form, casting the concrete, allowing it to set and cure, then placing the cables under tension. The cables must be protected with a steel or plastic tube or mastic coating to prevent bonding with the concrete prior to tensioning. The cables may or may not be grouted while under tension and are locked under tension by appropriate end clamps.

39. Ready-mixed plant, Permanent: Plant with a fixed location that uses mixer trucks to deliver the concrete. The concrete may be mixed in central mixers and hauled in agitator trucks or may be dry batched into mixer trucks and mixed on the way to the job site.

40. Ready-mixed plant, Portable: Temporary or transient type of plant used on large highway and airport jobs. The concrete may be produced by either a central mixer or a dry batch plant.

41. Ready-mixed plant, Mobile: A ready-mixed truck capable of transporting all raw materials (aggregate, cement, and water etc.) separately on the truck and proportioning and mixing them in the truck mounted mixer at the job site. (Concrete-mobile)

42. Reinforced concrete: Concrete with structural steel members added to increase strength.

43. Reinforced pipe: Concrete pipe with a steel cage added to provide increased tensile strength.

44. Retarding Agent: Material added to concrete for the purpose of prolonging the setting time of the concrete.

45. Shrink-mixed: Concrete mixed partially in a stationary central mixer and completely mixed in a truck mixer either on the way or at the job site.

46. Spin Cast Method For Concrete Pipe: A reinforcing cage (steel cylinder in pressure pipe) is fabricated and positioned in a form which is then placed horizontally on a high speed roller drive mechanism. The form is rotated at a high rate, while the concrete is added evenly by a reciprocating nozzle on the inside of the form. The spinning action densifies the concrete on the inside of the form and dewaters it. Water flows off the inside surface of the pipe and the concrete surface is finished by a mechanical roller.

47. Tendons: Steel cables used for reinforcement in prestressed concrete products.

48. Transport Bucket: Bucket used to carry concrete from the central mixer to the casting area in block, pipe, precast, and prestressed plants.

49. Vertical Cast Method - Reinforced and Pressure Pipe Production: Wet concrete mix is produced in a central mixer and transported to a vertical steel form via transport buckets. The concrete is poured into the form containing a reinforcing cage or cylinder, then mechanically vibrated for compaction. Concrete is allowed to set and forms removed. This method can produce any size of reinforced pipe, but is generally limited to diameters over 1.5 meters (5 ft).

50. Vertical Packerhead Method - Non-reinforced and Reinforced Pipe Production: Moist concrete is compacted and vibrated into a steel form by a packerhead. Generally used to produce pipe up to 1.5 meters (5 ft) in diameter.

51. Washoff: Waste water originating from washing off the exterior of a ready-mixed concrete truck.

52. Washout: Waste water originating from the washing of the interior of a ready-mixed concrete truck mixer or central mixer.

53. Water Reducing Agent: Material added to concrete for the purpose of reducing the quantity of mixing water required to produce a concrete of a given consistency.

54. Wetting Agent: Substance that renders a surface non-repellent to liquids.

55. Yard Runoff: Waste water originating from aggregate pile runoff, dust control spraying, truck chute runoff and spillage that follows the contour of the land and runs off the plant's property or into the treatment system.

TABLE 21

METRIC UNITS

CONVERSION TABLE

Multiply (English Units)		by	To obtain (Metric units)	
ENGLISH UNIT	ABBREVIATION	CONVERSION	ABBREVIATION	METRIC UNIT
acre	ac	0.405	ha	hectares
acre - feet	ac ft	1233.5	cu m	cubic meters
British Thermal Unit	BTU	1055	j	joules
cubic feet/minute	cfm	0.028	cu m/min	cubic meters/minute
cubic feet/second	cfs	1.7	cu m/min	cubic meters/minute
cubic feet	cu ft	0.028	cu m	cubic meters
cubic feet	cu ft	28.32	l	liters
cubic inches	cu in	16.39	cu cm	cubic centimeters
degree Fahrenheit	°F	0.555 (°F-32)*	°C	degree Centigrade
feet	ft	0.3048	m	meters
gallon	gal	3.785	l	liters
gallon/minute	gpm	0.0631	l/sec	liters/second
horsepower	hp	0.7457	kw	killowatts
inches	in	2.54	cm	centimeters
pounds	lb	0.454	kg	kilograms
million gallons/day	mgd	3,785	cu m/day	cubic meters/day
mile	mi	1.609	km	kilometer
square feet	sq ft	0.0929	sq m	square meters
square inches	sq in	6.452	sq cm	square centimeters
tons (short)	t	0.907	kkg	metric tons (1000 kilograms)
yard	yd	0.9144	m	meters
pounds/cubic yard	lb/cu yd	0.593	kg/cu m	kilograms/cubic meter
gallons/cubic yard	gal/cu yd	4.95	l/cu m	liters/cubic meter

* Actual conversion, not a multiplier

TECHNICAL REPORT DATA
(Please read Instructions on the reverse before completing)

1. REPORT NO. EPA 440/1-18/C4C	2.	3. RECIPIENT'S ACCESSION NO.
4. TITLE AND SUBTITLE Guidance Development Document for Effluent Limitations Guidelines and New Source Performance Standards for the Concrete Products Point Source Category		5. REPORT DATE
		6. PERFORMING ORGANIZATION CODE
7. AUTHOR(S) Richard J. Kinch, James R. Berlow		8. PERFORMING ORGANIZATION REPORT NO.
9. PERFORMING ORGANIZATION NAME AND ADDRESS U. S. Environmental Protection Agency, Effluent Guidelines Division (WH-552), 401 M Street, S.W., Washington, D. C. 20460		10. PROGRAM ELEMENT NO.
		11. CONTRACT/GRANT NO.
12. SPONSORING AGENCY NAME AND ADDRESS U. S. Environmental Protection Agency, 401 M Street, S. W., Washington, D. C. 20460		13. TYPE OF REPORT AND PERIOD COVERED Guidance
		14. SPONSORING AGENCY CODE

15. SUPPLEMENTARY NOTES

16. ABSTRACT

This guidance document presents the findings of a study on the wastewater discharge from the Concrete Products Industry. Included in the Concrete Products Industry is the manufacture of concrete block and brick; concrete pipe; precast and prestressed concrete; and ready-mixed concrete. Information outlining the applicable manufacturing processes; the treatment systems in use; the pollution reduction resulting from the use of control technologies; and treatment costs is provided.

17. KEY WORDS AND DOCUMENT ANALYSIS

a. DESCRIPTORS	b. IDENTIFIERS/OPEN ENDED TERMS	c. COSATI Field/Group
Concrete Wastewater Pollution		

18. DISTRIBUTION STATEMENT 1,000 copies	19. SECURITY CLASS *(This Report)*	21. NO. OF PAGES 167
	20. SECURITY CLASS *(This page)*	22. PRICE

EPA Form 2220-1 (9-73)

*U.S. GOVERNMENT PRINTING OFFICE: 1978 272-709/6392 1-3

United States
Environmental Protection
Agency

Official Business
Penalty for Private Use
$300

Fourth-Class Mail
Postage and Fees Paid
EPA
Permit No. G-35

Washington DC 20460

WH-552