440183084

DEVELOPMENT DOCUMENT FOR FINAL EFFLUENT LIMITATIONS GUIDELINES, NEW SOURCE PERFORMANCE STANDARDS AND PRETREATMENT STANDARDS FOR THE PHARMACEUTICAL MANUFACTURING POINT SOURCE CATEGORY

William D. Ruckleshaus
Administrator

Rebecca W. Hanmer
Acting Assistant Administrator
for Water

Steven Schatzow
Director
Office of Water Regulations and Standards

Jeffery D. Denit
Director, Effluent Guidelines Division

Robert W. Dellinger
Acting Chief, Wood Products and Fibers Branch

Frank H. Hund, Ph.D
Project Officer

Effluent Guidelines Division
Office of Water
U.S. Environmental Protection Agency
Washington, D.C. 20460

September 1983

ABSTRACT

This document presents the findings of a study of the Pharmaceutical Manufacturing Point Source Category for the purpose of finalizing effluent limitations guidelines for existing and new point sources and to establish pretreatment standards for existing and new dischargers to publicly owned treatment works to implement Sections 301, 304, 306, 307, 308, and 501 of the Clean Water Act (the Federal Water Pollution Control Act Amendments of 1972, 33 USC 1251 et. seq., as amended by the Clean Water Act of 1977, P.L. 95-217 (the "Act")). This document was also prepared in response to the Settlement Agreement in Natural Resources Defense Council, Inc. v. Train, 8 ERC 2120 (D.D.C. 1976), modified, 12 ERC 1833 (D.D.C. 1979), modified by Orders dated October 26, 1982, and August 2, 1983.

The information presented supports final regulations based on best practicable control technology currently available (BPT) and best available technology (BAT), new source performance standards (NSPS) and pretreatment standards for new and existing sources (PSNS and PSES) for the Pharmaceutical Manufacturing Point Source Category. The report presents and discusses data gathering efforts, consideration of subcategorization, characterization of wastewaters, selection of pollutant parameters, review of treatment technology, cost and nonwater quality considerations and development of regulatory options and effluent limitations.

TABLE OF CONTENTS

Section	Title	Page
I	EXECUTIVE SUMMARY	1
	A. Summary	1
	B. Subcategorization	2
	C. Effluent Limitations Guidelines	2
	D. Impact of Regulation	6
II	INTRODUCTION	7
	A. Purpose and Legal Authority	7
	B. Prior EPA Regulations	9
	C. Scope of this Rulemaking	9
	D. Definition of the Industry	9
	E. Summary of Methodology	12
	F. Data and Information Gathering Program	13
	G. Processing of Data and Information	15
III	DESCRIPTION OF THE INDUSTRY	17
	A. Introduction	17
	B. Detailed Industry Profile	17
	C. Manufacturing Processes	21
	D. Raw Materials and Products	31
	E. Current Discharger Status and BPT Compliance	33
IV	INDUSTRY SUBCATEGORIZATION	37
	A. Introduction	37
	B. Basis for BPT Subcategorization	37
	C. Selected Subcategories	38
	D. Subcategory Characteristics	38
	E. Subcategorization Analysis	40
	F. Conclusions of Subcategory Analysis and Decision to Maintain the Existing Subcategorization Scheme	47
V	WASTE CHARACTERIZATION	49
	A. Introduction	49
	B. Traditional Pollutants	49
	C. Priority Pollutants	54
	D. Wastewater Flow Characteristics	75
	E. Precision and Accuracy Program	75
VI	SELECTION OF POLLUTANT PARAMETERS	81
	A. Introduction	81
	B. Traditional Pollutants	81
	C. Priority Pollutants	83

TABLE OF CONTENTS (Continued)

Section	Title	Page
VII	CONTROL AND TREATMENT TECHNOLOGY	103
	A. Introduction	103
	B. In-Plant Source Control	103
	C. In-Plant Treatment	105
	D. End-of-Pipe Treatment	137
	E. Ultimate Disposal	149
VIII	ANALYSIS OF LONG TERM DATA FOR POLLUTANTS OF CONCERN	151
	A. Description and Technical Analysis of Data	151
	B. Effluent Variability Analysis	169
IX	EFFLUENT REDUCTION ATTAINABLE THROUGH THE APPLICATION OF THE BEST PRACTICABLE TECHNOLOGY CURRENTLY AVAILABLE-EFFLUENT LIMITATIONS GUIDELINES	175
	A. General	175
	B. Regulated Pollutants	175
	C. Identification of the Best Practicable Control Technology Currently Available	176
	D. BPT Effluent Limitations	176
	E. Rational for the Selection of the Technology Basis of BPT	177
	F. Methodology Used for the Development of BPT Effluent Limitations	177
	G. Cost of Application and Effluent Reduction Benefits	179
	H. Nonwater Quality Environmental Impacts	179
X	BEST CONVENTIONAL POLLUTANT CONTROL TECHNOLOGY CURRENTLY AVAILABLE	181
	A. General	181
XI	EFFLUENT REDUCTION ATTAINABLE THROUGH THE APPLICATION OF THE BEST AVAILABLE TECHNOLOGY ECONOMICALLY ACHIEVABLE-EFFLUENT LIMITATIONS GUIDELINES	183
	A. General	183
	B. BAT Effluent Limitations	184
XII	NEW SOURCE PERFORMANCE STANDARDS	185
	A. General	185
	B. NSPS	185

TABLE OF CONTENTS (Continued)

Section	Title	Page
XIII	PRETREATMENT STANDARDS FOR NEW AND EXISTING SOURCES	187
	A. General	187
	B. PSES and PSNS	190
	C. Cost of Application and Effluent Reduction Benefits	190
	D. Nonwater Quality Environmental Impacts	191
XIV	REFERENCES	193
XV	LEGEND OF ABBREVIATIONS	205
XVI	ACKNOWLEDGEMENTS	209
	APPENDICES	
	APPENDIX A. COST, ENERGY, AND NONWATER QUALITY ASPECTS	211
	APPENDIX B. GLOSSARY	237
	APPENDIX C. PHARMACEUTICAL INDUSTRY WASTEWATER DISCHARGE METHODS	251

LIST OF TABLES

Number	Title	Page
Section III		
III-1	Pharmaceutical Industry Geographical Distribution	18
III-2	Subcategory Breakdown	22
III-3	Production Operation Breakdown	23
III-4	Comparision of Plant Performance vs. 1976 BPT	35
Section IV		
IV-1	Flow and Pollutant Averages Used in Pharmaceutical Subcategorization Analyses	41
IV-2	Summary of Kruskel-Wallis and Van der Waerden Tests of Equality of the Four Subcategories	43
IV-3	Across Plant Mean Pollutant Levels for Unique Subcategory Plants Only	44
IV-4	Across Plant Mean Pollutant Levels for Defined "High" vs. "Low" Group Comparisons	46
Section V		
V-1	Summary of Long-Term Data	51
V-2	List of EPA Designated Priority Pollutants	55
V-3	Summary of Priority Pollutant Information: PEDCo Reports	58
V-4	Compilation of Data Submitted by the PMA from 26 manufacturers of Ethical Drugs: RTP Study	59
V-5	Summary of Volatile Organic Compound Emission Data: RTP Study	61
V-6	Summary of Major Priority Pollutants Identified from Multiple Sources of Information	63
V-7	Summary of Priority Pollutant Occurrence-Screening Plant Data	65
V-8	Analysis of Priority Pollutant Concentrations-Screening/Verification Data Base	70

LIST OF TABLES (Continued)

Number	Title	Page
V-9	Analysis of Wastewater Flow Characteristics	76
V-10	Comparison of Precision and Accuracy (P&A) Data - Plant 12236	77
Section VI		
VI-1	Priority Pollutants Excluded from Direct Discharger Regulations Based on Control by Other Limitation Technologies	86
VI-2	Priority Pollutants Excluded from Direct Discharger Regulations Based on Low Level Presence	87
VI-3	Priority Pollutants Excluded from Direct Discharger Regulations Based on Infrequent Occurrence	89
VI-4	Priority Pollutants Excluded from Direct Discharger Regulations Based on Presence in Amounts too Small to be Effectively Reduced by Technologies Known to the Administrator	91
VI-5	Estimated Achievable Long - Term Average Effluent Concentrations for the Priority Pollutant Metals	93
VI-6	Pollutants Excluded from Pretreatment Standards	96
VI-7	Pollutants Considered for Pretreatment Standards	99
Section VII		
VII-1	Summary of In-Plant Treatment Processes	107
VII-2	Methylene Chloride Removal in Packed Column Steam Stripper at Plant 12003	124
VII-3	Toluene Removal in Steam Distillation Flash Tank at Plant 12003	131
VII-4	Summary of End-of-Pipe Treatment Processes (Data Base: 308)	139
VII-5	Summary of Wastewater Discharges	150

LIST OF TABLES (Continued)

Number	Title	Page
Section VIII		
VIII-1	Long-Term Average Cyanide Concentrations (LTAs) and Variability Factors (VFs) from Cyanide Destruction Units	154
VIII-2	30-Day Maximum Average and Daily Maximum Limitations and Standards for Cyanide	155
VIII-3	30-Day Maximum Average and Daily Maximum Variability Factors Derived from End-of-Pipe Data from Plant 12236	157
VIII-4	Alternate Cyanide Limitations and Standards	159
VIII-5	Average Concentrations and Variability Factors Derived from Steam Stripping Data	161
VIII-6	Suggested TVO Limitations	163
VIII-7	Ratios of Effluent TSS (mg/l) to Effluent BOD (mg/l) for Biological Treatment Plants without Effluent Filtration	165
VIII-8	Summary of Median and Mean Ratios of Effluent TSS to Effluent BOD_5 for Various Plant Groups	166
VIII-9	Comparision of Ratios of BPT 30-Day Maximum Average Limitations for TSS (mg/l) and BOD (mg/l) Established for Related Industrial Categories Based on Biological Treatment	167
Appendix A		
A-1	Cost Estimating Criteria	213
A-2	Incremental Cost Requirements for Achieving BPT TSS Limitations	216
A-3	Design Criteria for CN Removal by Alkaline Chlorination	217
A-4	Cyanide Destruction Capital and Annual Costs	219
A-5	Design Criteria for Steam Stripper	222

LIST OF TABLES (Continued)

Number	Title	Page
A-6	Capital Itemized Costs for Batch Operation	223
	Capital Itemized Costs for Continuous Operation	224
	Annual Itemized Costs for Batch Operation	225
	Annual Itemized Costs for Continuous Operation	226
A-7	BPT Cyanide Destruction Energy Requirements	231
A-8	BAT Steam Stripping Energy Requirements	232
A-9	PSES Cyanide Destruction Energy Requirements	233
A-10	PSES Steam Stripping Energy Requirements for Methylene Chloride Removal	234

LIST OF FIGURES

Number	Title	Page
Section III		
III-1	Pharmaceutical Industry Geographical Distribution	20
Section VII		
VII-1	Cyanide Destruction System - Chlorination	110
VII-2	Cyanide Destruction System - Alkaline Hydrolysis	113
VII-3	Chromium Reduction System	116
VII-4	Metals Removal System - Alkaline Precipitation	118
VII-5	Typical Equipment for Steam Stripping Solvents from Wastewater	121
VII-6	Packed Column Steam Stripper at Plant 12003	130
VII-7	Steam Distillation Flash Tank at Plant 12003	134
VII-8	Activated Carbon Adsorption Unit	138
VII-9	Examples of Augmented Biological Systems	144
VII-10	Typical Clarifier Configurations	147
VII-11	Filtration Unit	148
Appendix A		
A-1	Cyanide Destruction Capital Costs	220
A-2	Cyanide Destruction Annual Costs	221
A-3	Capital Costs - Model Plant Steam Stripping Batch vs. Continuous	227
A-4	Annual Costs - Model Plant Steam Stripping Batch vs. Continuous	228

SECTION I

EXECUTIVE SUMMARY

A. SUMMARY

This document presents the technical rationale for effluent limitations and standards for the pharmaceutical manufacturing point source category as required by the Clean Water Act of 1977 (P.L. 95-217, "the Act") and the Settlement Agreement in Natural Resources Defense Council, Inc. v. Train, 8 ERC 2120 (D.D.C. 1976), modified, 12 ERC 1833 (D.D.C. 1979), modified by Orders dated October 26, 1982, and August 2, 1983. This document describes the technologies which form the bases for effluent limitations reflecting the best practicable control technology currently available (BPT) and the best available technology economically achievable (BAT), new source performance standards (NSPS), and pretreatment standards for new and existing sources (PSNS and PSES).

EPA developed these limitations and standards after undertaking a complex program utilizing industry data obtained under authority of Section 308 of the Act, supplemented by additional data collection programs for selected portions of the industry.

Plants in the pharmaceutical manufacturing point source category produce biological products, medicinal chemicals, botanical products and pharmaceutical products covered by Standard Industrial Classification Code (SIC) Numbers 2831, 2833, and 2834, and other commodities described within this report.

The industry is characterized by diversity of product, process, plant size, and process stream complexity. Subcategories based on process characteristics were defined for purposes of technical evaluation. These subcategories were found to be appropriate for regulatory purposes.

Section II of this document summarizes the rulemaking process. Sections III through VIII describe the technical data and engineering analyses used to develop the regulatory technology options. The rationales by which the Agency selected the technology options for each of the effluent limitations and standards are presented in Sections IX through XIII. Effluent limitations guidelines based on the application of BPT and BAT are to be achieved by existing direct dischargers. New source

performance standards (NSPS) based on the best available demonstrated technology are to be achieved by new direct discharging facilities. Pretreatment standards for existing and new sources (PSES and PSNS) are to be achieved by indirect dischargers for those pollutants which are incompatible with or not susceptible to treatment in a publicly owned treatment works (POTW). These effluent limitations and standards are required by Sections 301, 304, 306, and 307 of the Act.

B. SUBCATEGORIZATION

For the purpose of establishing BPT, BAT, NSPS, PSES, and PSNS EPA subcategorized the pharmaceutical manufacturing industry as follows:

Subpart A -- Fermentation Products
Subpart B -- Extraction Products
Subpart C -- Chemical Synthesis Products
Subpart D -- Mixing/Compounding and Formulation
Subpart E -- Research

This subcategorization scheme, which resulted from previous Agency rulemaking efforts in 1976, was reviewed based on current information. EPA considered various factors such as age and size of plant, raw material usage, process employed, products and waste treatability in reviewing the adequacy of the original subcategorization scheme.

Based on the review, EPA excluded Subpart E, Research Only, from further regulation under BAT, NSPS, PSES, and PSNS. In addition, EPA had considered collapsing the remaining four subcategories into a single subcategory. The Agency, however, in establishing final rules, maintained the original subcategorization scheme. A detailed discussion of subcategorization can be found in Section IV.

C. EFFLUENT LIMITATIONS GUIDELINES

1. BPT Limitations

The 1976 BPT limitations on the discharge of BOD_5 COD and pH are unchanged and remain in effect. These regulations require all subcategories of plants A through E to achieve effluent reductions of 90 and 74 percent from raw waste for BOD_5 and COD, respectively. Additionally, these regulations require all subcategories of plants (A through E) to maintain the pH of the

final effluent between 6.0 and 9.0 units. In this rulemaking, the Agency is amending BPT TSS limitations for subcategories B, D and E and establishing TSS limitations for subcategories A and C and is establishing final BPT cyanide limitations for subcategories A, B, C and D. In addition, the Agency has reviewed the available influent and effluent BOD5 and COD data in the light of our decision to use the original BPT subcategorization scheme. As a result, alternative maximum 30-day average concentrations are established for BOD5 and COD for three subcategories (B, D and E). These alternative limitations reflect the minimum attainable effluent BOD5 and COD limitations consistent with the technology basis of BPT as established in 1976 (41 FR 50178; November 17, 1976). The newly established BPT regulations are summarized below:

Parameter	Maximum 30-Day Average	Daily Maximum
TSS (mg/l)	1.7 times the equivalent BPT BOD5 Concentration Limitation	—
Total Cyanide (mg/l)		
Alternate A	9.4	33.5
Alternate B	9.4(.35)R	33.5(.18)R

Alternate A: Measure at effluent from cyanide destruction unit. Applies only when all cyanide-bearing wastes are diverted to a cyanide destruction unit and subsequently are discharged to a biological treatment system.

Alternate B: Measure at final effluent discharge point.

"R" equals the dilution ratio of the cyanide contaminated waste streams to the total process wastewater discharge flow.

In addition, the BPT limitations applicable to subcategories B, D and E would not require a plant in these subcategories to attain a maximum 30-day average effluent limitation of less than the equivalent of 45 mg/l for BOD5 and 220 mg/l for COD.

2. BAT Limitations

Final BAT limitations which apply to subcategories A, B, C and D are summarized below:

Parameter	Maximum 30-Day Average	Daily Maximum
Total Cyanide		
Alternate A	9.4	33.5
Alternate B	9.4(.35)R	33.5(.18)R
COD	(Reserved)	

Alternate A: Measure at effluent from cyanide destruction unit. Applies only when all cyanide-bearing wastes are diverted to a cyanide destruction unit and subsequently are discharged to a biological treatment system.

Alternate B: Measure at final effluent discharge point.

"R" equals the dilution ratio of the cyanide contaminated waste streams to the total process wastewater discharge flow.

BAT COD limitations are being reserved and will be issued at a later date. Additional information on the identity of pollutants that contribute to COD and on applicable COD removal technologies is required before EPA can fully evaluate COD control options.

3. BCT Limitations (Reserved)

BCT effluent limitations are reserved pending issuance of a final BCT methodology.

4. NSPS

Final NSPS limitations which apply to subcategories A, B, C and D are summarized below:

Parameter	Maximum 30-Day Average	Daily Maximum
Total Cyanide		
Alternate A	9.4	33.5
Alternate B	9.4(.35)R	33.5(.18)R

Alternate A: Measure at effluent from cyanide destruction unit. Applies only when all cyanide-bearing wastes are diverted to a cyanide destruction unit and subsequently are discharged to a biological treatment system.

Alternate B: Measure at final effluent discharge point.

"R" equals the dilution ratio of the cyanide contaminated waste streams to the total process wastewater discharge flow.

NSPS COD limitations are being reserved for promulgation at a later date. Additional information on the identity of pollutants that contribute to COD and on applicable COD removal technologies is required before EPA can fully evaluate COD control options.

NSPS BOD_5 and TSS limitations are being proposed concurrently with promulgation of these final regulations. These proposed limitations are discussed in Proposed Development Document for Effluent Limitations and Standards for the Pharmaceutical Manufacturing Point Source Category, (U.S.EPA, September 1983).

5. PSES and PSNS

Final PSES and PSNS which apply to subcategories A, B, C and D are summarized below:

Parameter	Maximum 30-Day Average	Daily Maximum
Total Cyanide		
Alternate A	9.4	33.5
Alternate B	9.4R	33.5R

Alternate A: Measure at effluent from cyanide destruction unit before dilution with other streams. Applicable only if all cyanide-containing wastes are diverted to a cyanide destruction unit.

Alternate B: Measure at final effluent discharge point.

"R" equals the dilution ratio of the cyanide contaminated waste streams to the total process wastewater flow.

D. IMPACT OF REGULATION

1. BPT Regulation

BPT effluent limitations for cyanide are expected to prevent the discharge of 127,000 pounds of cyanide per year to surface waters. The estimated total annual and investment costs for compliance with BPT cyanide limits are $274,000 and $579,000 (1982 dollars), respectively. Increases in energy consumption as a result of these limitations are expected to be negligible when compared to the energy used in the manufacturing process.

The final BPT TSS limitations are expected to prevent the discharge of 137,500 pounds per year of TSS. The estimated total annual and investment costs for compliance with BPT TSS limitations are $140,000 and $470,000 (1982 dollars), respectively.

No implementation costs are attributable to the alternative BOD_5 and COD limitations, because they are, in effect, a relaxation of limitations that previously applied to low raw waste load plants in subcategories B, D and E.

2. BCT Regulations (Reserved)

3. BAT Regulations

No incremental costs, removals or energy requirements are attributable to the BAT cyanide limitations since they are identical to the BPT cyanide limitations.

4. PSES and PSNS Regulations

Final pretreatment standards for existing sources (PSES) control the discharge of cyanide to POTWs. EPA estimates that these standards will prevent the discharge of 148,000 pounds per year of cyanide to the nation's surface waters. Estimated total annual and investment costs for compliance with these standards are $258,000 and $415,000 (1982 dollars), respectively. Increases in energy use resulting from compliance with these standards are expected to be negligible when compared with the total energy used in the manufacturing process. Because PSNS are equal to PSES, there is no incremental cost or non-water quality impact resulting from compliance with PSNS.

5. NSPS Regulation

Final NSPS for cyanide will not require new sources to reduce their discharge of cyanide beyond levels that are required of existing sources. Consequently, no incremental costs, pollutant removals or energy requirements are expected as a result of compliance with final NSPS.

SECTION II

INTRODUCTION

A. PURPOSE AND LEGAL AUTHORITY

The Federal Water Pollution Control Act Amendments of 1972 established a comprehensive program to restore and maintain the chemical, physical, and biological integrity of the Nation's waters [Section 101(a)]. By July 1, 1977, existing industrial direct dischargers were required to achieve effluent limitations requiring the application of the best practicable control technology currently available (BPT) [Section 301(b)(1)(A)]. By July 1, 1983, these dischargers were required to achieve effluent limitations requiring the application of the best available technology economically achievable (BAT), which will result in reasonable further progress toward the national goal of eliminating the discharge of all pollutants [Section 301(b)(2)(A)]. New industrial direct dischargers were required to comply with Section 306 new source performance standards (NSPS) based on best available demonstrated technology. New and existing dischargers to publicly owned treatment works (POTW) were subject to pretreatment standards under Sections 307(b) and (c) of the 1972 Act. The requirements for direct dischargers were to be incorporated into National Pollutant Discharge Elimination System (NPDES) permits issued under Section 402 of the Act. Pretreatment standards were made enforceable directly against dischargers to POTWs (indirect dischargers).

Although Section 402(a)(1) of the 1972 Act authorized local authorities to set requirements for direct dischargers on a case-by-case basis, Congress intended that, for the most part, control requirements would be based on regulations promulgated by the EPA Administrator. Section 304(b) of the Act required the Administrator to promulgate regulatory guidelines for direct discharger effluent limitations setting forth the degree of effluent reduction attainable through the application of best practicable control technology (BPT) and best available technology economically achievable (BAT). Moreover, Sections 304(c) and 306 of the Act required promulgation of regulations for NSPS, and Sections 304(f), 307(b), and 307(c) required promulgation of regulations for pretreatment standards. In addition to these regulations for designated industry categories, Section 307(a) of the Act required the Administrator to promulgate effluent standards applicable to all dischargers of toxic pollutants. Finally, Section 501(a) of the Act authorized the Administrator to prescribe any additional regulations necessary to carry out his or her functions under the Act.

The EPA was unable to promulgate many of these regulations by the dates contained in the 1972 Act. In 1976 EPA was sued by several environmental groups; in settlement of this lawsuit, EPA and the plaintiffs executed a Settlement Agreement, which was approved by

the Court. This agreement required EPA to develop a program and adhere to a schedule for promulgating, for 21 major industries, BAT effluent limitations guidelines, pretreatment standards, and new source performance standards for 65 "toxic" pollutants and classes of pollutants. (40)

On December 27, 1977, the President signed into law the Clean Water Act of 1977. Although this law makes several important changes in the Federal water pollution control program, its most significant feature is its incorporating into the Act several of the basic elements of the Settlement Agreement program for toxic pollution control. Sections 301(b)(2)(A) and 301(b)(2)(C) of the Act now require the achievement by July 1, 1984, of effluent limitations requiring application of BAT for toxic pollutants, including the 65 priority pollutants and classes of pollutants which Congress declared toxic under Section 307(a) of the Act. Likewise, EPA's programs for new source performance standards and pretreatment standards are now aimed principally at toxic pollutant controls. Moreover, to strengthen the toxics control program, Congress added Section 304(e) to the Act, authorizing the Administrator to prescribe best management practices (BMPs) to prevent the release of toxic and hazardous pollutants from plant site runoff, spillage or leaks, sludge or waste disposal, and drainage from raw material storage associated with, or ancillary to, the manufacturing or treatment process.

In keeping with its emphasis on toxic pollutants, the Clean Water Act of 1977 also revised the control program for "conventional" pollutants (including biochemical oxygen demand, suspended solids, fecal coliform, oil and grease, and pH) identified under Section 304(a)(4). Instead of BAT for conventional pollutants, the new Section 301(b)(2)(E) requires by July 1, 1984 achievement of effluent limitations requiring the application of the best conventional pollutant control technology (BCT). The factors considered in assessing BCT include the reasonableness of the relationship between the costs of attaining a reduction in effluents and the effluent reduction benefits derived, and the comparison of the cost and level of reduction for an industrial discharge with the cost and level of reduction of similar parameters for a typical POTW [Section 304(b)(4)(B)]. For nontoxic, nonconventional pollutants, Sections 301(b)(2)(A) and 301(b)(2)(F) require achievement of BAT effluent limitations within three years after their establishment or after July 1, 1984 (whichever is later), but not later than July 1, 1987.

This document presents the technical rationale for revised BPT and new BAT effluent limitations, new source performance standards (NSPS), pretreatment standards for existing sources (PSES), and pretreatment standards for new sources (PSNS) for the pharmaceutical manufacturing point source category.

B. PRIOR EPA REGULATIONS

On November 17, 1976, the EPA promulgated interim final BPT regulations for the pharmaceutical manufacturing point source category at 41 FR 50676, 40 CFR Part 439, Subparts A-E. (27) The BPT regulations set monthly limitations for BOD_5 and COD based on percent removals for all subcategories. No daily maximums were established for these two parameters. The pH was required to be within the range of 6.0 to 9.0 at all times. The rulemaking also set a maximum allowable average of daily TSS values for any calendar month for subcategories B, D, and E. No TSS limits were established for subcategories A and C. Subpart A (the section applicable to the fermentation products subcategory) was amended on February 4, 1977 (42 FR 6814), to improve the language referring to separable mycelia and solvent recovery and to allow the inclusion of spent beers (broths) in the calculation of raw waste loads for subcategory A in those instances where the spent beer is actually treated in the wastewater treatment system. The technical basis for the 1976 BPT regulations was provided in "Development Document for Interim Final Effluent Limitations Guidelines and Proposed New Source Performance Standards for the Pharmaceutical Manufacturing Point Source Category", published in December 1976. This report is henceforth referred to as the 1976 Development Document. (55) The 1976 BPT regulations were never challenged, and are still in effect. On November 26, 1982, the Agency proposed revised BPT and new BCT, BAT, NSPS, PSES and NSPS limitations and standards for the Pharmaceutical Manufacturing Category (47 FR 53584).

C. SCOPE OF THIS RULEMAKING

In EPA's initial rulemaking (August 1973 thru November 1976), emphasis was placed on the achievement of BPT based on the control of familiar, primarily conventional pollutants, such as BOD_5, TSS, and pH, and nonconventional pollutants, such as COD. By contrast, EPA's efforts in this round of rulemaking were directed toward finalizing BPT and BAT effluent limitations, NSPS, PSES and PSNS, with a special emphasis on the identification and quantitation of toxic pollutant discharges from the pharmaceutical industry.

D. DEFINITION OF THE INDUSTRY

The pharmaceutical manufacturing point source category is defined as those manufacturing plants producing or utilizing the following products, processes, and activities:

(1) Biological products covered by Standard Industrial Classification (SIC) Code No. 2831.

(2) Medicinal chemicals and botanical products covered by SIC Code No. 2833.

(3) Pharmaceutical products covered by SIC Code No. 2834.

(4) All fermentation, biological and natural extraction, chemical synthesis, and formulation products which are considered as pharmaceutically active ingredients by the Food and Drug Administration, but which are not covered by SIC Code Nos. 2831, 2833, or 2834. (Products of these types which may not contain pharmaceutically active ingredients will be included if they are manufactured by processes, and result in wastewaters, which closely correspond to those of a pharmaceutical product. Examples of ingredients which fall into this category are citric acid, benzoic acid, gluconic acid, fumaric acid, and caffeine.)

(5) Cosmetic preparations covered by SIC Code No. 2844 which function as a skin treatment. (This would exclude lipsticks, eyeshadows, mascaras, rouges, perfumes, and colognes which enhance appearance or provide a pleasing odor, but do not provide skin care. In general, this would also exclude deodorants, manicure preparations, and shaving preparations which do not primarily function as a skin treatment.)

(6) The portion of a product with multiple end uses which is attributable to pharmaceutical manufacturing either as a final pharmaceutical product, component of a pharmaceutical formulation or a pharmaceutical intermediate. (Products with pharmaceutical and nonpharmaceutical end uses will be entirely covered under this point source category if the products are used primarily as pharmaceuticals.)

(7) Pharmaceutical research which includes biological, microbiological, and chemical research, product development, clinical and pilot plant activities. (This includes animal farms at which pharmaceutical research is conducted or at which pharmaceutically active ingredients are tested on the farm animals. This does not include farms which breed, raise, and/or hold animals for research at another site. Also excluded are ordinary feedlot or farm operations using feed which contains pharmaceutically active ingredients since the wastewater generated from these operations is not characteristic of pharmaceutical wastewater).

Products or activities specifically excluded from the pharmaceutical manufacturing category are:

(1) Surgical and medical instruments and apparatus covered by SIC Code No. 3841.

(2) Orthopedic, prosthetic, and surgical appliances and supplies covered by SIC Code No. 3842.

(3) Dental equipment and supplies covered by SIC Code No. 3843.

(4) Medical laboratories covered by SIC Code No. 8071.

(5) Dental laboratories covered by SIC Code No. 8072.

(6) Outpatient care facilities covered by SIC Code No. 8081.

(7) Health and allied services, not elsewhere classified, covered by SIC Code No. 8091.

(8) Diagnostic devices not covered by SIC Code No. 3841.

(9) Animal feeds which include pharmaceutically active ingredients such as vitamins and antibiotics. (The major portion of the product is nonpharmaceutical and the wastewater which results from the manufacture of feed is not characteristic of pharmaceutical manufacturing.)

(10) Foods and beverages which are fortified with vitamins or other pharmaceutically active ingredients. (The major portion of the product is nonpharmaceutical and the wastewater which results from the manufacture of these products is not characteristic of pharmaceutical manufacturing.)

In the 1976 regulation based on BPT, the pharmaceutical manufacturing point source category was grouped into five product or activity areas. This subcategorization was based on distinct differences in manufacturing processes, raw materials, products, and wastewater characteristics and treatability. The five subcategories that were selected are:

(1) Subcategory A - Fermentation Products.
(2) Subcategory B - Biological and Natural Extraction Products.
(3) Subcategory C - Chemical Synthesis Products.
(4) Subcategory D - Formulation Products.
(5) Subcategory E - Pharmaceutical Research.

For the purposes of the 1977-83 study, EPA decided to de-emphasize pharmaceutical research (Subcategory E). Pharmaceutical research does not fall within the SIC Code Nos. 2831, 2833, and 2834, which were identified in the Settlement Agreement, and does not appear to be a significant part of the industry from the point of view of effluent. In addition, this activity does not involve production and wastewater generation on a regular basis. However, in cases where the pharmaceutical research activity does involve the production of active ingredients by processes generating wastewater which are similar to those in the current study, the information contained in this development document may be used by permit writers and other interested parties.

In developing the November 1982 proposal, this subcategory breakdown was utilized for evaluative purposes only. In terms of analyzing raw waste characteristics, wastewater flow, treatment technology alternatives, etc., a breakdown of the industry by product/process (i.e., subcategories) was the most practical. However, as explained in more detail below, separate subcategories were not considered necessary for regulatory purposes at proposal because it appeared that one set of limits could be met by all pharmaceutical plants. Therefore, the proposed limitations would have been applicable across the industry irrespective of the process source of the waste. Since then, analysis of the data, including new data, and evaluation of the comments on the November 1982 proposal, indicate that different limitations may be appropriate for different types of processes. Therefore, as explained in more detail in Section IV of this document, the final regulations retain the 1976 subcategorization scheme.

E. SUMMARY OF METHODOLOGY

EPA first gathered technical and descriptive data about the industry, from which the Agency proceeded to develop the final regulations. EPA used four basic sources in acquiring data to support the new regulations. These sources included:

(1) Data acquired from industry under Section 308 of the Act. Using this approach, questionnaires were distributed to a representative sample of the industry. This was followed by a screening and verification sampling program of candidate plants chosen after review of the questionnaire responses. The analytical procedures for pollutant detection and measurement were developed under section 304(h). (See "Sampling and Analysis Procedures for Screening of Industrial Effluents for Priority Pollutants," U.S. EPA, April 1977.)

(2) Data acquired through an open literature search of publications relevant to the pharmaceutical industry.

(3) Data acquired from EPA regional offices, State and other government offices, and pharmaceutical plant visits.

(4) The Administrative Record from the 1976 rulemaking for the pharmaceutical industry, including the 1976 Development Document.

EPA then studied the pharmaceutical industry to determine whether differences in such factors as raw materials, final products, manufacturing processes, equipment, water use, wastewater constituents, and age and size of the manufacturing facilities required the development of separate effluent limitations and standards for different segments of the industry. This study required the identification of raw waste and treated effluent characteristics, including: (1) the water sources and volume

used, (2) the manufacturing processes employed, (3) the location of pollutant and wastewater sources within the plant, and (4) the wastewater constituents (including toxic pollutants). After tentatively designating subcategories, EPA then identified the constituents of wastewaters which should be considered for effluent limitations and standards.

Next, the EPA identified several distinct control and treatment technologies, including both in-plant and end-of-process technologies, which currently are in use or capable of being used to control or treat pharmaceutical industry wastewater. The Agency compiled and analyzed historical and newly acquired effluent data from plants where these technologies are utilized. Long-term performance, operational limitations, and reliability for each treatment and control technology were also considered and statistical analyses of long-term data were performed in order to derive performance standards and variability factors. Additionally, the EPA evaluated the non-water quality environmental impacts of these technologies including impacts on air quality, solid waste disposal, and energy use.

The EPA developed base cases representative of each subcategory (based on raw waste load characteristics) to derive treatment processes and capital and operating costs for each technology. These costs were presented as curve functions based on waste loading and flow. The technologies evaluated included biological end-of-pipe processes (e.g., biological enhancement), as well as in-plant priority pollutant treatments (cyanide destruction and steam stripping). The annual unit costs (including capital amortization) were calculated for varying flows and waste loads. The Agency then evaluated the economic impact of these costs on the industry as a whole. Costs and economic impacts are discussed in the "Economic Analysis of Effluent Standards and Limitations for the Pharmaceutical Manufacturing Point Source Category," (U.S.EPA, September 1983). Following the public comment period for the proposal, EPA reviewed and evaluated the comments and new data, and made appropriate adjustments to the earlier analyses.

Through this process, EPA identified various control and treatment technologies as BPT, BAT, NSPS, PSES, and PSNS. These regulations, however, do not require the installation of any particular technology. Rather, they require achievement of effluent limitations representative of the proper application of these technologies or equivalent technologies. A pharmaceutical plant's existing controls should be fully evaluated, and existing treatment systems fully optimized before making a commitment to any new or additional end-of-pipe treatment technology.

F. DATA AND INFORMATION GATHERING PROGRAM

The data and information gathering program conducted prior to the publication of the proposed regulations on November 26, 1982 is

discussed in the Development Document for Proposed Effluent Limitations Guidelines and Standards for the Pharmaceutical Point Source Category, (U.S. EPA, November 1982). Since the proposal, the Agency has gathered data and information for purposes of adequately responding to comments on the proposed regulations, clarifying ambiguities and correcting errors in the Agency's data base and providing adequate support for final regulations for the pharmaceutical manufacturing point source category. These data gathering efforts involved a sampling program, a 308 survey questionnaire, 308 data requests and direct communications with individual plant personnel. These areas of effort are discussed below:

(1) Post Proposal Sampling.

The Agency, in response to comments on its intended policy regarding pretreatment standards for toxic volatile organics, sampled a POTW in order to determine whether or not pass through of toxic volatile organics was occurring and whether this pass through was the result of discharges from a pharmaceutical source. This sampling episode is discussed in Section VI. Also in response to comments, the Agency sampled two steam strippers operating within a pharmaceutical plant. This sampling episode is discussed in Section VII of this document.

(2) 308 Survey Questionnaire and Individual 308 Data Request Letters.

In order to enable the Agency to evaluate correctly the need for pretreatment standards for toxic volatile organics and to determine the costs of complying with such standards, the Agency sent a 308 survey questionnaire to nine indirect discharging pharmaceutical plants. This questionnaire and the responses to it are discussed in Section VII of this document. Other individual 308 data request letters were sent to plants that commented on the proposed regulations. The letters requested data on conventional and nonconventional pollutants. The responses to these later requests will be presented when the Agency finalizes regulations controlling the discharge of conventional and nonconventional pollutants.

(3) Direct Communications with Individual Plants

Plants that had submitted data and comments in response to the proposed regulations were contacted whenever uncertainties or ambiguities existed in their submissions. Also, plants were contacted when they indicated in their comments that they had additional information which would be useful to the Agency's regulatory effort. Industry profile information obtained since proposal is presented in Section III.

G. PROCESSING OF DATA AND INFORMATION

Stanford Research Institute (SRI) was contracted to do a two-part statistical analysis of the pharmaceutical industry data base. Long-term effluent data were evaluated to determine variability of pollutant removal resulting from long-term operation. The analysis centered on effluent data from which SRI calculated daily and monthly variability factors for each pollutant.

In the second part of the analysis, screening and verification data were evaluated to determine the frequency of occurrence of each priority pollutant occurring in the manufacture of pharmaceuticals. A frequency ranking was prepared for groups of priority pollutants and is discussed in Section V. In addition, the statistical pattern of concentrations of each pollutant present was analyzed. Frequency of occurrence and concentration information were two criteria on which the selection of specific priority pollutants for regulation was based. In addition, EPA considered whether treatment required by existing regulations would control these pollutants. Section VI contains a detailed discussion of this selection process in light of the criteria for exclusion contained in paragraph 8 of the Settlement Agreement.

After the November 1982 proposal, SRI performed a statistical analysis of the proposed subcategorization scheme using the latest available data including data submitted with comments. This analysis is discussed in Section IV. SRI also performed a variability analysis on the cyanide data used to develop the final cyanide limitations. This analysis is discussed in Section VIII along with the analysis of the data obtained through the direct sampling of steam strippers.

SECTION III

DESCRIPTION OF THE INDUSTRY

A. INTRODUCTION

In order to establish an industry data base upon which regulations can be promulgated, a comprehensive profile must be developed from survey, sampling and existing data sources. Section III of the Proposed Development Document presents information which describes the pharmaceutical manufacturing industry in a quantitative and specific manner. That information was obtained prior to publication of the proposed regulations on November 26, 1982. The information presented in this section updates that information.

B. DETAILED INDUSTRY PROFILE

The objectives of the 308 Questionnaire were to obtain information from pharmaceutical manufacturing facilities and to develop an industry profile that includes plant size, age, location, and production activities. Appendix F of the Proposed Development Document listed each of the 464 manufacturing plants contained in the comprehensive EPA data base by plant code number (assigned for identification purposes), applicable manufacturing subcategories, manufacturing employment, and year of operational startup. Plants with code numbers in the 12000 series are from the original 308 Portfolio survey; those with 20000 series numbers are from the Supplemental 308 Portfolio survey. Since proposal, four pharmaceutical plants (11111, 33333, 44444, and 55555) not in the original 308 survey supplied the Agency with data. The Agency also learned that two facilities (20153 and 12112) are no longer manufacturing pharmaceuticals. Therefore, there are now 466 plants in the comprehensive data base listed in Appendix C by plant code number.

Table III-1 shows the geographical distribution of the industry and the number of manufacturing plants by state and EPA region. Also shown are the average number of manufacturing employees per plant and the average plant startup year.

Most of the pharmaceutical industry is located in the eastern half of the United States (See Figure III-1.) Of the 466 manufacturing plants in the comprehensive data base, almost 80 percent are in the East. New Jersey (with about 16 percent) and Region II (with approximately 36 percent) are the largest pharmaceutical manufacturing state and EPA region, respectively. The data show that Regions II, III, V, and VII (the Northeast and Midwest) have generally older plants than Regions IV, VI, VIII, and IX (the South and West). This is due to the recent trend toward building plants in the "Sun Belt" of the United States.

Table III-1

PHARMACEUTICAL INDUSTRY
GEOGRAPHICAL DISTRIBUTION

Location	Number of Plants	Percent of Total Plants	Average Number Employees Per Plant	Average Plant Start-up Year(1)
EASTERN U.S.	369	79.2	268	1952
Connecticut	8	1.7	195	1963
Maine	0	0.0	-	-
Massachusetts	7	1.5	77	1961
New Hampshire	0	0.0	-	-
Rhode Island	1	0.2	(2)	(2)
Vermont	1	0.2	(2)	(2)
REGION 1 Total	17	3.6	161	1960
New Jersey	75	16.1	350	1950
New York	43	9.3	211	1943
Puerto Rico	46	9.9	216	1970
Virgin Islands	2	0.4	13	-
REGION 2 Total	166	35.6	239	1956
Delaware	2	0.4	121	1965
Maryland	7	1.5	65	1938
Pennsylvania	27	5.8	370	1950
Virginia	7	1.5	138	1950
West Virginia	2	0.4	151	-
District of Columbia	0	0.0	-	-
REGION 3 Total	45	9.7	267	1950
Alabama	3	0.6	15	1958
Georgia	6	1.3	189	1956
Florida	8	1.7	95	1967
Mississippi	2	0.4	759	1949
North Carolina	12	2.6	456	1971
South Carolina	3	0.6	87	1968
Tennessee	10	2.1	301	1940
Kentucky	5	1.1	12	-
REGION 4 Total	49	10.5	250	1962
Illinois	38	8.2	305	1951
Indiana	18	3.9	664	1944
Ohio	14	3.0	203	1929
Michigan	14	3.0	423	1931
Wisconsin	4	0.9	54	1957
Minnesota	4	0.9	41	-
REGION 5 Total	92	19.7	351	1943

Table III-1
(cont'd)

PHARMACEUTICAL INDUSTRY
GEOGRAPHICAL DISTRIBUTION

Location	Number of Plants	Percent of Total Plants	Average Number Employees Per Plant	Average Plant Start-up Year(1)
WESTERN U.S.	97	20.8	152	1962
Arkansas	2	0.4	1558	1970
Louisiana	2	0.4	9	-
Oklahoma	0	0.0	-	-
Texas	13	2.8	127	1968
New Mexico	0	0.0	-	-
REGION 6 Total	17	3.6	129	1968
Iowa	3	0.6	77	1963
Kansas	4	0.9	123	1954
Missouri	17	3.6	108	1943
Nebraska	4	0.9	201	1962
REGION 7 Total	28	6.0	117	1951
Colorado	5	1.1	96	1967
Utah	1	0.2	(2)	(2)
Wyoming	0	0.0	-	-
Montana	0	0.0	-	-
North Dakota	0	0.0	-	-
South Dakota	0	0.0	-	-
REGION 8 Total	6	1.3	162	1968
Arizona	1	0.2	(2)	(2)
California	38	8.2	139	1967
Neva	1	0.2	(2)	(2)
Hawaii	0	0.0	-	-
REGION 9 Total	40	8.6	137	1967
Alaska	0	0.0	-	-
Idaho	0	0.0	-	-
Oregon	2	0.4	25	-
Washington	4	0.9	33	-
REGION 10 Total	6	1.3	30	1955

(1) Since data concerning plant start-up year were not solicited

FIGURE III-1
PHARMACEUTICAL INDUSTRY
GEOGRAPHICAL DISTRIBUTION

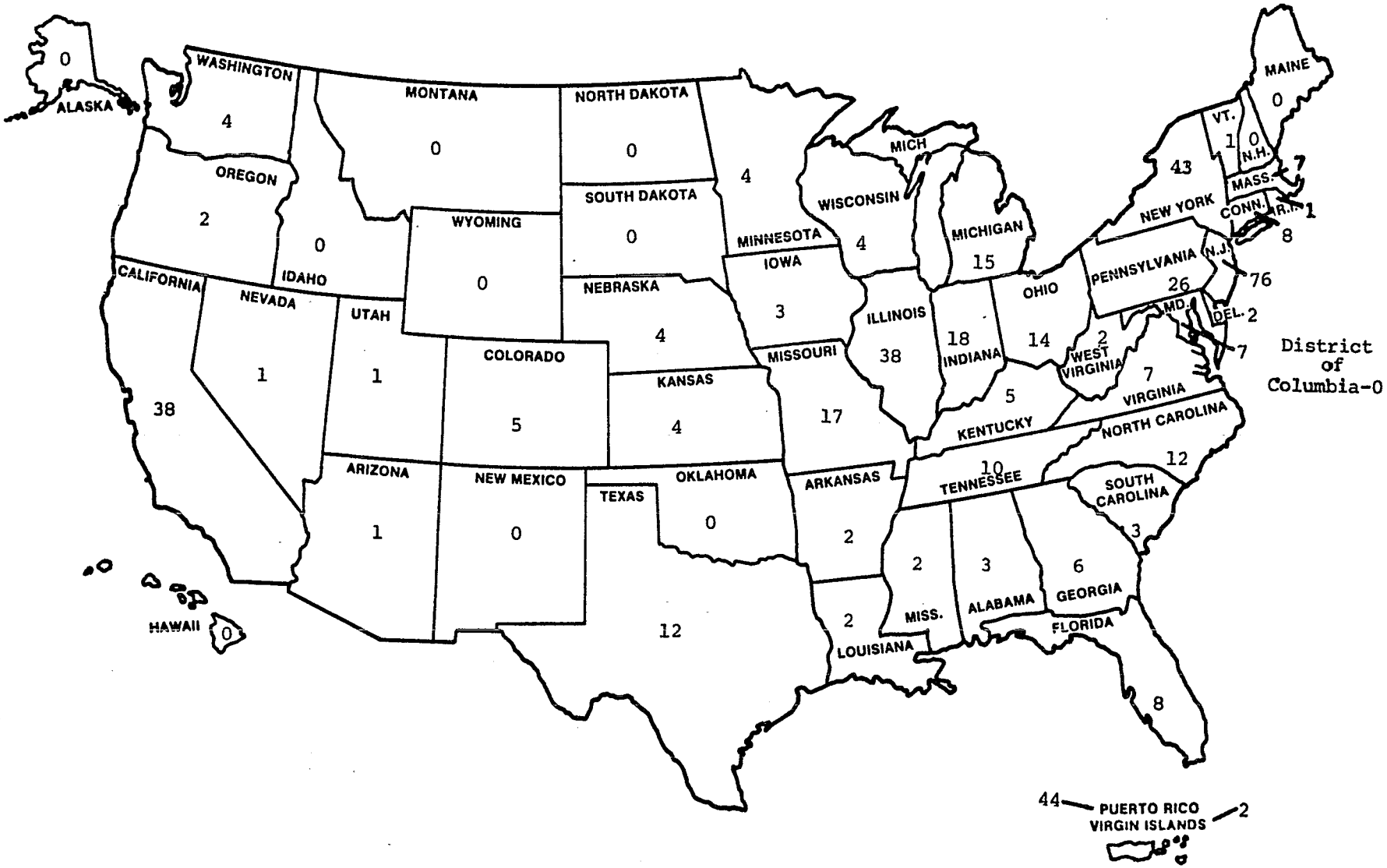

Puerto Rico has close to 10 percent of the industry and is becoming a major pharmaceutical manufacturing center.

Table III-2 breaks down the industry by manufacturing subcategory. Subcategory D (formulating/mixing/ compounding) is the most prevalent pharmaceutical manufacturing operation, with 80 percent of the plants in the industry engaged in this activity. Fifty-eight percent of these plants conduct Subcategory D operations only. The remainder also have operations in other subcategories.

Table III-3 summarizes the total number of batch, continuous, and semi-continuous manufacturing operations by subcategory for the entire pharmaceutical industry. Batch-type production is the most common type of manufacturing technique for each of the four subcategories.

C. MANUFACTURING PROCESSES

One of the most important generalizations which can be made about the wastewaters produced and discharged by the pharmaceutical industry is their extreme diversity. Products, processes, and the materials to which wastewater is exposed vary greatly. With the goal of relating discharged wastewater to some common characteristics, subcategories based on unit manufacturing processes were defined. The broad manufacturing processing areas considered were (a) fermentation, (b) biological and natural extraction, (c) chemical synthesis, and (d) formulation.

One characteristic of processing in this industry is that the ratio of finished product to the quantity of raw materials, solvents, and other processing materials is generally very low. This is most apparent in natural extraction (Subcategory B), followed by fermentation (A), synthesis (C), and formulation (D), respectively.

1. Fermentation

Fermentation is the usual method for producing most antibiotics and steroids. The fermentation process involves three basic steps: inoculum and seed preparation, fermentation, and product recovery.

Production of a fermentation pharmaceutical begins with spores from the plant master stock. The spores are activated with water, nutrients, and warmth; they are then propagated through the use of agar plates, test tubes, and flasks until enough mass is produced for transfer to the seed tank. In less critical fermentations, a single seed tank may serve several fermenters. In this type of operation, the seed tank is never emptied completely, so the seed remaining will serve as the inoculum for the next batch. The seed tank is emptied, sterilized, and re-inoculated only when contamination occurs.

TABLE III-2

SUBCATEGORY BREAKDOWN

Manufacturing Subcategory Combination	Number of Plants	Percent of Total Plants
A only	4	0.9
AB	1	0.2
ABC	2	0.4
ABCD	8	1.7
ABD	4	0.9
AC	3	0.6
ACD	10	2.2
AD	5	1.1
B only	21	4.5
BC	12	2.6
BCD	9	1.9
BD	23	4.9
C only	49	10.5
CD	42	9.0
D only	271	58.2
Not Available	2	0.4
Total Plants	466	100.0

Individual Manufacturing Subcategory	Number of Plants in Subcategory	Percent of Totals
A	37	5.9
B	80	12.8
C	135	21.6
D	372	59.4
Not Available	2	0.3

Total number of subcategories 626*

* This represents the total number of subcategories covered by the 466 manufacturing plants.

TABLE III-3

PRODUCTION OPERATION BREAKDOWN

Type of Operation	Number of Operations Subcategory A	B	C	D	Total	Percent of Total Oper.
Batch	32	76	128	358	594	87.0
Continuous	3	0	14	16	33	4.8
Semi-continuous	11	9	19	17	56	8.2
Total Number of Operations	46	85	161	391	683	100.0
Percent of Total Operations	6.7	12.4	23.6	57.2	100.0	
Percent of Subcategory Which is Batch	69.6	89.4	79.5	91.6	87.0	

* Since each individual subcategory within a plant may be comprised of more than one type of operation, this figure will be greater than the total number of subcategories.

NOTE: The above data apply to 460 manufacturing plants. For six plants no information was available on their subcategories and types of production operations.

Fermentation is conventionally a large-scale batch process. A fermentation cycle begins with a water wash and steam sterilization of the fermenter vessel. Sterilized nutrient raw materials in water are then charged to the fermenter. Microorganisms are transferred to the fermenter from the seed tank and fermentation begins. During fermentation, air is sparged into the batch and temperature is carefully controlled. After a fermentation period of from twelve hours to a week, the fermenter batch whole broth is ready for filtration. Filtration removes mycelia (remains of the microorganisms), leaving the filtered aqueous broth containing product and residual nutrients ready to enter the product recovery phase.

There are three common methods of product recovery: solvent extraction, direct precipitation, and ion exchange or adsorption. Solvent extraction is a recovery process in which an organic solvent is used to remove the pharmaceutical product from the aqueous broth and form a more concentrated solution. With subsequent extractions, the product is separated from any contaminants. Further removal of the product from the solvent can be done by either precipitation, solvent evaporation, or further extraction processes. Normally, solvents used for product recovery are recovered and reused. However, small portions left in the aqueous phase during the solvent "cut" can appear in the plant's wastewater stream. The typical processing solvents used in fermentation operations are methylene chloride, benzene, chloroform, 1,1-dichloroethylene, and 1,2-trans-dichloroethylene. (42)

Direct precipitation consists of first precipitating the product from the aqueous broth, then filtering the broth, and finally extracting the product from the solid residues. Priority pollutants known to be used in the precipitation process are copper and zinc. (42)

Ion-exchange or adsorption involves the removal of the product from the broth, using such solid materials as ion exchange resin, adsorptive resin, or activated carbon. The product is recovered from the solid phase with the use of a solvent; it is then recovered from the solvent.

Steam is used as the major sterilizing medium for most equipment. However, to the extent that chemical disinfectants may be used, they can contribute to priority pollutant waste loads. Phenol is a commonly used disinfectant.

Sometimes a fermentation batch can become infested with a phage, a virus that attacks microorganisms. Although phage infestation is rare in a well-operated plant, when it occurs, very large wastewater discharges may be necessary in a short period of time. Usually the batch is discharged early and its nutrient pollutant concentration is higher than that of spent broth.

Another fermentation wastewater source is the air pollution control equipment that is sometimes installed to clean fermentation waste off-gas. The air and gas vented from the fermenters usually contain odoriferous substances and large quantities of carbon dioxide. Treatment is often necessary to deodorize the gas before its release to the atmosphere. Some plants employ incineration methods; others use liquid scrubbers. The blowdown from scrubbers may contain absorbed chemicals, light soluble organic compounds, and heavier insoluble organic oils and waxes. However, wastewater from this source is unlikely to contain priority pollutants.

The pollution contribution of the spent beer arises from the fact that the beer contains food materials such as sugars, starches, protein, nitrogen, phosphate, and other nutrients. Methods for treating the fermentation wastes are generally biological in nature. Although the spent beers, even in a highly concentrated form, can be satisfactorily handled by biological treatment systems, it is less likely to upset the system if the wastes are first diluted with other wastewater to some degree. Dilution normally results from the equalization of fermentation wastes with the other waste streams. As a result, a satisfactory biological reduction of the contaminants can be achieved.

The 308 data shows generally that wastewaters from Subcategory A plants generally are characterized by high BOD, COD, and TSS concentrations, large flows, and a pH range of about 4.0 to 8.0.

2. Biological and Natural Extraction

Many materials used as pharmaceuticals are derived from such natural sources as the roots and leaves of plants, animal glands, and parasitic fungi. These products have numerous and diverse pharmaceutical applications ranging from tranquilizers and allergy relief medications to insulin and morphine. Also included in this group is blood fractionation, which involves the production of plasma and its derivatives.

Despite their diversity, all extractive pharmaceuticals have a common characteristic; they are too complex to synthesize commercially. They are either very large molecules and/or their synthesis results in the production of several stereoisomers, only one of which has pharmacological value. Extraction is an expensive manufacturing process since it requires the collection and processing of very large volumes of specialized plant or animal matter to produce very small quantities of products.

The extraction process consists of a series of operating steps. In almost every step, the volume of material being handled is reduced significantly. In some processes, the reductions may be in orders of magnitude and the complex final purification operations may be conducted on quantities of materials only a few

thousandths of the volume of the material handled in earlier steps. Neither continuous processing methods nor conventional batch methods are suitable for extraction processing. Therefore, a unique assembly-line, small-scale batch processing method has been developed. Material is transported in portable containers through the plant in batches of 75 to 100 gallons. A continuous line of these containers is sent past a series of operating stations. At each station, operators perform specific tasks on each batch in turn. As the volume of material being handled decreases, individual batches are continually combined to maintain reasonable operating volumes and the line moves more slowly. When the volume is reduced to a very small quantity, the containers used also become smaller, with laboratory-size equipment used in many cases.

An extraction plant may produce one product for a few weeks; then, by changing the logistical movement of pots and redefining the tasks to be conducted at each station, a plant can convert to the manufacture of a different product.

Residual wastes from an extraction plant essentially will be equal to the weight of raw material, since the active ingredients extracted are generally present at very low levels. Solid wastes are the greatest source of the pollutant load; however, solvents used in the processing steps will cause both air and water pollution.

The nature of the products of the pharmaceutical industry dictates that any manufacturing facility maintain a standard of cleanliness higher than that required for most industrial operations. Since most of these plants are cleaned frequently, detergents and disinfectants are normally found in the wastewater.

As in the fermentation process, a small number of priority pollutants were identified as being used in the manufacturing of extractive pharmaceuticals. (41) The cations of lead and zinc are known to be used as precipitating agents. Phenol was identified as an equipment sterlizing chemical as well as an active ingredient. Otherwise, priority pollutants are found to be used only as processing solvents. Some identified as solvents were benzene, chloroform, and 1,2 dichloroethane.

Solvents are used in two ways in extraction operations. First, they are used to remove fats and oils that would contaminate the products. These "defatting" extractions use an organic liquid that dissolves the fat but not the product material. Solvents are also used to extract the product itself. Plant alkaloids, when treated with an alkali, become soluble in such selected organic solvents as benzene, chloroform, or 1,2 dichloroethane.

Ammonia is used in many extraction operations since it is necessary to control the pH of water solutions from both animal

and plant sources to achieve separation of valuable components from waste materials. Ammonium salts are used as buffering chemicals and aqueous or anhydrous ammonia is used as an alkalizing reagent. The high degree of water solubility of ammonium salts prevents unwanted precipitation of salt; also, ammonia does not react chemically with animal or plant tissue. Such basic materials as hydroxides and carbonates of alkali metals do not have these advantages.

The principal sources of wastewater from biological/natural extraction operations are processes which generate (a) spent raw materials (waste plasma fractions, spent eggs, spent media broth, plant residues, etc.); (b) floor and equipment washwaters; (c) chemical wastes (spent solvents and the like); and (d) spills.

In general, the bulk of the spent raw materials is collected and sent to an incinerator or landfill. Likewise, the nonrecoverable portions of the spent solvents are incinerated or landfilled. However, in both cases, portions of the residual materials find their way into a plant's wastewater. Floor and equipment washings and spills also contribute to the ordinary waste discharge.

Pollutant information for the biological/natural extraction operations in the pharmaceutical data base was limited because of the relatively small number of plants engaging in these operations. However, the available data did allow for some general conclusions to be drawn. Generally, wastewaters from Subcategory B plants are characterized by low BOD, COD, and TSS concentrations; small flows; and pH values of approximately 6.0 to 8.0.

3. Chemical Synthesis

Most of the compounds used as drugs today are prepared by chemical synthesis (generally by a batch process). The basic major equipment item is the conventional batch reaction vessel, one of the most standardized equipment designs in industry.

Generally, the vessel is equipped with a motor-driven agitator and an internal baffle. It is made of either stainless steel or glass-lined carbon-steel and contains a carbon-steel outer shell suitable for either cooling water or steam. Vessels of this type are made in many different sizes, with capacities ranging from 0.02 to 11.0 m^3 or more.

The basic vessels may be fitted with many different attachments. Baffles usually contain temperature sensors to measure the temperature of the reactor contents. An entire reactor may be mounted on load cells to weigh accurately the reactor contents. Dip tubes are available to introduce reagents into the vessels below the liquid surface. One of the top nozzles may be fitted with a floodlight and another with a glass cover to enable an

operator to observe the reactor contents. Agitators may be powered by two-speed motors or by variable-speed motor drives. Typically, batch reactors are installed with only the top heads extending above the operating floor of the plant in order to provide the operator with easy access for loading and cleaning.

With other suitable accessories, these vessels can be used in many different ways. Solutions can be mixed, boiled, and chilled in them. By addition of reflux condensation, complete reflux operations are possible. By application of a vacuum, the vessels become vacuum evaporators. Solvent extraction operations can be conducted in them, and, by operating the agitator at slow speed, they serve as crystallizers.

Synthetic pharmaceutical manufacture consists of using one or more of these vessels to perform in a step-by-step fashion the various operations necessary to make the product. Following a definite recipe, the operator (or, increasingly, a programmed computer) adds reagents; increases or decreases the flow rate of cooling water, chilled water, or steam; and starts and stops pumps to transfer the reactor contents into another similar vessel. At appropriate steps in the process, solutions are pumped through filters or centrifuges or are pumped into solvent recovery headers or waste sewers.

The vessels with an assembly of auxiliary equipment are usually arranged into independent process units; a large pharmaceutical plant may contain many such units. Each unit may be suitable for the complete or partial manufacture of many different pharmaceutical compounds. Only with the highest volume products is the equipment "dedicated" or modified to be suitable for only one process.

Each pharmaceutical is usually manufactured in a "campaign" in which one or more process unit is employed for a few weeks or months to manufacture enough compound to satisfy its projected sales demand. Campaigns are usually tightly scheduled, with detailed coordination extending from procurement of raw materials to packaging and labeling of the product. For a variable period of time, therefore, a process unit actively manufactures a specific compound. At the end of this campaign, another is scheduled to follow. The same equipment and operating personnel are used to make a completely different product, utilizing different raw materials, executing a different recipe, and creating different wastes.

The synthetic pharmaceuticals industry uses a wide variety of priority pollutants as reaction and purification solvents. (43) Water was reported to be used more often than would be expected in an industry whose products are organic chemicals. However, benzene and toluene were the most widely used organic solvents since they are stable compounds that do not easily take part in chemical reactions. Similar six member ring compounds (xylene,

cyclohexane, pyridine, etc.) also were reported as either being used in the manufacture of synthesized pharmaceuticals or resulting from unwanted side reactions.

Solvents serve several functions in a chemical synthesis. They dissolve gaseous, solid, or viscous reactants to bring all reactants into close molecular proximity. They serve to transmit heat to or from the reacting molecules. By physically separating molecules from each other, they slow down some reactions that would otherwise take place too rapidly and that would result in excessive temperature increases and unwanted side reactions.

There are other less obvious uses of solvents, however. One of these is the use of a solvent in the control of reaction temperature. It is common practice in a batch-type synthesis to select a solvent whose boiling point is the same as the desired reaction temperature and which is compatible with the reaction. Heat is then applied to the reaction mass at a rate sufficient to keep the mixture continuously boiling. Vapors that rise from the reaction vessel are condensed and the liquefied solvent is allowed to drain back into the reaction vessel. Such refluxing prevents both overheating and overcooling of the reactor contents and can automatically compensate for variations in the rate of release or absorption of chemical energy.

Essentially all production plants operate solvent recovery facilities that purify contaminated solvent for reuse. These facilities usually contain distillation columns and may also include extraction facilities where still another solvent is used to separate impurities. Many of the wastes from the synthetic pharmaceutical industry will be discharged from these solvent recovery facilities. Aqueous wastes which may result from such operations include residues saturated with the solvents recovered.

Another cause of solvent loss is storage practices. Bulk storage is usually in an unpressurized tank that is only partially filled. The level of the liquid in the tank rises and falls as liquid is added to or removed from the tank. The vapor in the tank above the surface of the liquid is therefore exhausted when the liquid level is rising; as the level falls, fresh air (or nitrogen from a padding system) is introduced. Even if no liquid is added or removed, the tank "breathes" as a result of temperature and barometric pressure changes. Each time a tank "exhales," the released vapor is saturated with solvent vapor; rather large quantities of solvent can be lost to the atmosphere through this mechanism.

Chemical synthesis operations also produce large quantities of pollutants normally measured as BOD and COD. Wastewater is generally produced with each chemical modification that requires the filling and emptying of the batch reactors. These waste-

waters can contain the unreacted raw materials as well as some solvents.

The effluent from chemical synthesis operations is the most complex to treat because of the many types of operations and chemical reactions (nitration, amination, halogenation, sulfonation, alkylation, etc.). The production steps may generate acids, bases, cyanides, metals, and many other pollutants. In some instances, process solutions and vessel wash waters may also contain residual solvents. Sometimes, this wastewater is incompatible with biological treatment systems. Although it is possible to acclimate the bacteria to the various substances, there may be instances where certain chemical wastes are too concentrated or too toxic to make this feasible. Thus, it may be necessary to equalize and/or chemically pretreat some process wastewater prior to conventional treatment.

Primary sources of wastewater from chemical synthesis operations are (a) such process wastes as spent solvents, filtrates, concentrates, etc.; (b) floor and equipment wash waters; (c) pump seal waters; (d) wet scrubber spent waters; and (e) spills. Wastewaters from Subcategory C plant can be characterized as having high BOD, COD, and TSS concentrations; large flows; and extremely variable pH, ranging from 1.0 to 11.0.

4. Formulation

Although pharmaceutically active ingredients are produced in bulk form, they must be prepared in dosage form for use by the consumer. Pharmaceutical compounds can be formulated into tablets, capsules, liquids, or ointments.

Tablets are formed in a tablet press machine by blending the active ingredient, filler, and binder. Some tablets are coated by tumbling with a coating material and drying. The filler (usually starch, sugar, etc.) is required to dilute the active medicinal ingredient to the proper concentration, a binder (such as corn syrup or starch) is necessary to bind the tablet particles together. A lubricant (such as magnesium stearate) may be added for proper tablet machine operation. The dust generated during the mixing and tableting operation is collected and is usually recycled directly to the same batch. Broken tablets are generally collected and recycled to the granulation operation in a subsequent lot. After the tablets have been coated and dried, they are bottled and packaged.

Capsules are produced by first forming the hard gelatine shell. These shells are produced by machines that dip rows of rounded metal dowels into a molten gelatine solution and then strip the capsules from the dowels after the capsules have cooled and solidified. Imperfect capsules are remelted and reused, if possible, or sold for glue manufacture. Most pharmaceutical companies purchase empty capsules from a few specialty producers.

The active ingredient and any filler are mixed before being poured by machine into the empty gelatine capsules. The filled capsules are bottled and packaged. As in the case of tablet production, some dust is generated. Although this is recycled, small amounts of waste dust must be disposed of. Some glass and packaging waste from broken bottles and cartons also result from this operation.

Liquid preparations can be formulated for injection or oral use. In either case, the liquid is first weighed and then dissolved in water. Injectable solutions are bulk sterilized by heat or filtration and then poured into sterilized bottles. Oral liquid preparations may be bottled directly without the sterilization steps.

Wastewaters are generated by general cleanup operations, spills, and breakage. Bad batches may create a solid waste disposal problem.

The primary objective of mixing/compounding/formulation operations is to convert the manufactured products into a final, usable form. The necessary production steps have typically small wastewater flows because very few of the unit operations use water in a way that would cause wastewater generation. The primary use of water in the actual formulating process is for cooling water in the chilling units and for equipment and floor wash.

Sources of wastewater from mixing/compounding/formulation operations are (a) floor and equipment wash waters, (b) wet scrubbers, (c) spills, and (d) laboratory wastes. The use of water to clean out mixing tanks can flush materials of unusual quantity and concentration into the plant sewer system. The washouts from recipe kettles may be used to prepare the master batches of the pharmaceutical compounds and may contain inorganic salts, sugars, syrup, etc. Other sources of contaminated wastewater are dust and fumes from scrubbers either in building ventilation systems or on specific equipment. In general, these wastewaters are readily treatable by biological treatment systems.

An analysis of the pollutant information in the pharmaceutical data base shows that wastewaters from Subcategory D plants normally have low BOD, COD, and TSS concentrations; relatively small flows; and pH values of 6.0 to 8.0.

D. RAW MATERIALS AND PRODUCTS

The pharmaceutical industry utilizes a vast array of raw materials and processing agents. The diversity of feedstock is attributable to the variety of products and the number of process variations common to the industry. A number of materials that

can be used as feedstocks and processing agents are discussed below.

Fermentation operations use large quantities of nutrient materials such as carbohydrates and proteins. Examples of some raw materials are meat extractions and distillers extract. Materials classified as priority pollutants which enter fermentation operations are mainly metals, as reaction modifiers and processing agents in the fermenter, and organic solvents, which are employed as extractive agents for product separation and purification. The residues from the organic starting materials and mycelia contribute heavily to conventional BOD loadings.

Biological and natural extraction processes can have a wide variety of feedstocks including roots, leaves of plants, animal glands or parasite fungi. These substances contribute to BOD loadings; priority pollutant loadings are primarily due to solvents used for extraction. These solvents can be any number of organic compounds with benzene and chloroform being among the most widely used.

Chemical synthesis presents the broadest spectrum of starting materials. Feedstocks can range from ox bile to dextrose. Given the appropriate starting material there are many common synthetic processes (as many as several hundred) by which the starting material is transformed to the product. A number of solvents and additives are required to complete the synthesis. Solvents are usually inexpensive relative to the product and are used liberally for this reason. These solvents are almost exclusively organic and may be priority pollutants. Additives are used to control reactions and many contain metals that are priority pollutants.

Product recovery and purification from most of the processes used to produce pharmaceuticals including some formulation operations expose a variety of solvents and extractive agents to wastewater. These include hydrocarbons and other organic compounds such as methylene chloride, benzene, carbon tetrachloride, and chloroform. Reaction control, and in some cases reaction requirements, call for the use of many metal compounds listed as priority pollutants.

Many of the 126 priority pollutants appear in the industry's wastewater. Most of them have their source in the raw materials and processing agents employed. The organic solvent and metal pollutants are almost completely accounted for by plant material inputs.

In summary, chemical materials utilized and produced in the pharmaceutical industry are numerous and diverse. They are used as reactants, extractive solvents, catalysts, inhibitors, diluents, and for other purposes. In addition, other chemical

compounds may be identified as intermediates, products, and by-products. Many of these materials are among those listed as priority pollutants. Sections V and VI of this document discuss the usage and occurrence of priority pollutants in pharmaceutical wastewater.

E. CURRENT DISCHARGER STATUS AND BPT COMPLIANCE

1. Discharge and Category Status

At proposal, there were 464 plants in the Agency's data base. Of these, 61 were direct dischargers, 270 were indirect dischargers and 133 were zero dischargers. Since proposal, the Agency has become aware of changes in discharge and manufacturing status in the industry. Nine plants which were formerly classified as direct dischargers (12239, 12030, 12194, 12267, 12281, 12057, 12261, 12264 and 12339) have now been classified indirect dischargers and one plant (20402) has become a zero discharger. The Agency is also aware that four new direct discharging plants (11111, 33333, 44444 and 55555) were not included in the 308 data surveys. In addition, two indirect dischargers (20153 and 12112) are no longer manufacturing pharmaceuticals. As a result of these changes there are now 466 plants in the Agency's pharmaceutical data base. Of these, 55 are direct dischargers, 277 are indirect dischargers and 134 are zero dischargers. The Agency is also aware that 16 percent of these plants reported both direct and indirect discharges. However, for purposes of analysis and evaluation, the assigned discharge status was based on the manner in which a plant disposed of the predominant portion of its process wastewater. Tables III-1 and III-2 present the latest information on discharge and manufacturing status.

In addition, the Agency is now aware that the pharmaceutical manufacturing operations at four direct dischargers (12175, 12407, 20245 and 20297) and three indirect dischargers (12247, 20312 and 20519) contribute only a small portion of the total process wastewater flow at these plants. Consequently, the wastewater at these plants is not representative of pharmaceutical manufacturing and, therefore, data from these facilities were not used in the subcategorization analysis or in other analyses.

2. BPT Compliance

Direct discharger wastewater effluents in the pharmaceutical industry are currently subject to 1976 BPT regulations. A plant-by-plant analysis of 308 data from 51 direct dischargers indicates that, although many plants are well within BPT limits, 6 plants are not meeting either the BPT BOD_5 limitation requiring 90 percent removal, or the BPT COD limitation requiring 74 percent removal. Another 12 plants are not meeting the 1976 BPT TSS requirements for Subcategory B and D plants. Plants not

meeting one or more of the BPT requirements are listed in Table III-4.

TABLE III-4

Comparison of Plant Performance vs. 1976 BPT

Direct Discharge Plants Meeting BPT BOD_5 and COD Limitations (BOD_5 90% Removal and COD 74% Removal)

12038	12117	12317	
12026	12097	12462	Total: 15
12036	12294	12248	
12132	12161	33333	
12015	12053	44444	

Direct Discharge Plants Meeting BPT BOD_5 Limitations But No COD Data Available

12022	11111	
12463	55555	Total: 5
12471		

Direct Discharge Plants Not Meeting BPT BOD_5 and/or BPT COD Limitations

12160	12236	
12338	20165	Total: 6
12459	20257	

Direct Discharge Plants Without Percent Removal Data:

12119	12098	20037	12001	20298	
12256	12283	20201	12095	12006	
12085	12287	20319	12406	12104	Total: 25
12187	12298	20246	20370	12308	
12089	12307	12205	12073	12014	

Direct Discharge B, D Plants Not Meeting 1976 BPT TSS Limitations (17.7 mg/l):

12085	12205	12298	12471	
12098	12248	12307	20037	Total: 12
12160	12283	12338	44444	

SECTION IV

INDUSTRY SUBCATEGORIZATION

A. INTRODUCTION

This section describes the subcategorization scheme used for BPT and discusses the wastewater characteristics of each subcategory. It then describes the analyses performed as a result of public comments on the proposal to collapse four of the original subcategories into a single subcategory. The section concludes with an explanation of the decision to maintain the original BPT subcategorization scheme for regulations controlling the discharge of conventional and nonconventional pollutants.

B. BASIS FOR BPT SUBCATEGORIZATION

The existing BPT regulation divides the pharmaceutical industry into subcategories based on the general type of manufacturing process. Process method is an easily definable basis for subcategorization and is well understood by those knowledgeable of the industry. Characteristically only one process is used for a given product or class of products although there are exceptions in the processing sequence. Subcategorization based on process, therefore, provides effective subcategorization by product type as well.

Both plant size and wastewater flow relate to process methods in the sense that some processing methods (e.g., fermentation and synthesis) are generally undertaken only in large-scale or highly complex facilities. More direct product-oriented methods, such as biological extraction or product formulation generally involve small and less complex manufacturing facilities and less water use.

The wastewater generated by most plants in the industry results from more than one kind of process. Nonetheless, the existence of single subcategory plants does permit wastewater characterization according to process method. Process methods are often distinct from one another in their effect on wastewater characteristics (pollutant identities, loads and flow) because of differences in the production modes involved and the use of the campaign operation. Production mode may be batch or continuous and in some cases semi-continuous, that is, with part of the process being carried out on a batch basis (e.g., chemical synthesis) and the other part of the process being carried out continuously (e.g., product purification). Campaign operations involve the use of the same equipment train to produce different products at different times. Both approaches to production are

employed where possible to reduce unit operating costs and the number of certification analyses.

Fermentation and chemical synthesis processes are generally conducted on a batch basis. Fermentation usually involves large batches, while the batch size tends to vary considerably for chemical synthesis processes. Chemical synthesis involving several steps is usually conducted using the campaign operation method. Biological extraction and product mixing and formulation processes are generally carried out continuously.

The use of differing production approaches not only affects wastewater characteristics on a plant-by-plant basis but also affects the wastewater characteristics of individual plants on a day-to-day basis. The effect of this induced variability on wastewater characteristics and the resulting influence on treatment efficiency can be ameliorated to some extent by flow equalization prior to treatment.

C. SELECTED SUBCATEGORIES

The pharmaceutical industry subcategories selected and established for data analysis are:

Subcategory A - Fermentation
Subcategory B - Biological Extraction
Subcategory C - Chemical Synthesis, and
Subcategory D - Mixing, Compounding, and Formulation

These are identical to four of the subcategories established in the original BPT rulemaking (41 FR 50676). An additional subcategory (Subcategory E - Research) was identified earlier in the 1976 Development Document. However, since research does not fall within SIC Codes 2831, 2833, or 2834 (designated to be studied by EPA in the Settlement Agreement) and does not have wastewater characteristics warranting the development of a national regulation, it is not included in this study.

D. SUBCATEGORY CHARACTERISTICS

There are discernable differences among the subcategories when viewed in terms of effluent concentration averages or ranges and wastewater flow rates. These differences support the identification and use of these subcategories for regulatory purposes.

1. Fermentation is the basic processing method used in the production of most antibiotics and steroids. The steps employed are (a) preparation of a seed, (b) innoculation of the nutrient batch, (c) fermentation of the nutrient raw materials, and (d) recovery of the product by such means as extraction, precipitation, or ion exchange.

Fermentation processes are typically very large water users. Spent beers are the major source of characteristically high BOD_5, COD, and suspended solids levels in the wastewater.

2. Biological or natural extraction is the extractive removal of therapeutic products from such natural sources as plant parts (e.g., roots or leaves) animal parts (e.g., glands), or parasitic fungi (e.g., molds).

In contrast to fermentation, biological extraction processes are normally small-volume water users with lower BOD_5, COD, and suspended solids levels.

3. Chemical synthesis is utilized widely in the manufacture of many drugs in use today. Most production is in batch reactors which can be used for a wide variety of process steps (heating, cooling, mixing, evaporation, condensation, crystallization, and extraction). Generally, these vessels are constructed of glass-lined or stainless steel. Their versatility permits multiple functions to produce many different compounds.

Chemical synthesis processes are characterized as relatively large water users with high pollutant loadings. Also, a wide variety of chemical pollutants can be expected.

4. In formulation (mixing, compounding, and formulation), pharmaceuticals are prepared in such useable forms as tablets, capsules, liquids, and ointments. Active ingredients are physically mixed with filler, formed into dosage quantities, and packaged for distribution.

Formulation is normally a low-level water user (in many cases a dry operation) with low pollutant levels.

5. Variations in process routes employed by different producers are common in the pharmaceutical industry. Process variations in chemical synthesis plants manufacturing the same product occur because different starting materials and reaction sequences are used. Two plants making the same product but using different starting materials may use different reaction sequences. It is possible that once a common intermediate compound is derived, that the remaining processing steps will mirror each other. Even if the same starting material is used by different plants, it is possible, due to the complexity of a synthesis, that several feasible routes to an end product exist. The decision as to which route will be employed can depend on economics, patent coverage, corporate history or even personal preferences.

In fermentation and material extraction processes, the major differences between processes will occur in the extraction method. In many cases, extractions can be accomplished by any number of solvents. Choice of a solvent will depend on environmental impact, company history, economics, patents and

other factors. Due to the number of variables involved it is not surprising that such processes vary widely between companies.

E. SUBCATEGORIZATION ANALYSIS

As explained in the preamble to the regulation proposed in November of 1982 (47 FR 53584; November 26, 1982), EPA proposed to collapse four subcategories into a single subcategory. Along with comments on the November 1982 proposal, the Agency received new plant data which was added to the existing data base. This updated data base is presented in Table IV-I. The Agency statistically analyzed these data on influent and effluent characteristics of all direct dischargers to determine if the proposed change to collapse the existing four production subcategories into a single subcategory was appropriate. A discussion of the sources of data, the statistical comparisons employed, and the summary of results are presented below:

1. Sources of Data

The subcategorization analyses are based on three sources of data:

a. the daily pollutant specific influent/effluent monitoring data used in the November 1982 proposed rulemaking,

b. pollutant specific long-term influent/effluent averages reported to EPA on the 308 Portfolio for Pharmaceutical Manufacturing, and

c. pollutant specific influent/effluent monitoring data submitted to EPA after the November 1982 proposed rulemaking.

The following rules of precedence were applied for data utilization if a particular plant was included in more than one data source: (a) plant specific pollutant long-term averages were based on daily monitoring data rather than reported 308 long-term averages when both sources of data were available; (b) if daily monitoring data were not available for a specific pollutant, then the plant's reported "308" long term average was used; and (c) daily pollutant specific monitoring data submitted after proposal took precedence over earlier submitted daily monitoring data and reported "308" information.

2. The Statistical Comparisons Employed

The statistical analyses were based on nonparametric methodologies. Nonparametric procedures are typically utilized when assumptions required in performing parametric tests (e.g., normality) are either suspect, or not readily evaluated from the available data. Nonparametric procedures do not require specifying a particular probability distribution for the

TABLE IV-1

Flow and Pollutant Averages Used in Pharmaceutical Subcategorization Analyses

PLANT	SUBCAT	FLOWKGD	INBOD	EFBOD	INBODLB	EFBODLB	INCOD	EFCOD	INCODLB	EFCODLB	INTSS	EFTSS	INTSSLB	EFTSSLB
11111	C	41.60♦	2733.10♦	164.50♦	940.80♦	55.70♦	.	849.30♦	.	294.84♦	.	335.00♦	.	133.65♦
12001	D	140.00*	.	21.00*	.	24.53*	.	.	.	.	.	.	.	.
12006	D	1.00*	.	.	.	.	.	.	.	.	.	.	.	.
12014	B	387.08*	.	.	.	.	.	.	.	.	.	.	.	.
12015	D	180.93	232.64	9.70	192.84	7.81	552.68	43.98	462.48	35.44	123.76	10.76	102.56	8.67
12022	A C	14[illegible]3.07	2141.62	110.24	25879.4	1308.27	.	.	.	.	.	84.05	.	990.99
12026	C	1[illegible].58	3669.96	188.14	4869.56	136.42	7334.70	1221.75	9700.36	1644.68	87.96	283.68	113.45	377.83
12036	A	10[illegible].66	1570.77	33.04	14489.1	293.37	3542.27	444.49	32356.6	3919.70	1059.13	70.12	9812.09	728.21
12038	ABCD	8316.03♦	662.00♦	28.32♦	42605♦	2038.20♦	1472.00♦	173.71♦	97419♦	12100.5♦	.	17.87♦	.	1187.11♦
12053	D	2500.00*	299.00*	8.00*	6237.89*	166.98*	1205.00*	67.00*	25139.3*	1397.79*	383.00*	2.00*	7990.34*	41.72*
12073	C	15.00*	.	.	.	.	.	.	.	.	.	.	.	.
12085	D	0.80*	.	32.20*	.	0.21*	.	432.06*	.	2.88*	.	29.60*	.	0.20*
12089	B D	350.00*	.	13.80*	.	37.97*	.	.	.	.	.	13.00*	.	37.97*
12095	CD	174.00*	.	.	.	.	.	.	.	.	133.00*	6.20*	193.12*	9.00*
12097	CD	63.99	1577.26	49.39	844.38	30.64	1884.84	37.61	984.70	20.42	.	18.11	.	10.50
12098	D	5.52	.	409.88	.	12.81	.	.	.	.	.	392.08	.	16.16
12104	D	2200.00*	.	.	.	.	.	.	.	.	.	.	.	.
12117	B	180.86	34.58	1.94	26.48	1.73	95.41	24.49	76.59	20.34	.	16.08	.	12.81
12119	A B	63.60*	.	7.28*	.	3.86*	.	40.30*	.	21.39*	.	70.20*	.	37.26*
12132	A C	975.84♦	2898.44♦	66.58♦	23748.6♦	549.92♦	6494.58♦	1240.21♦	53398.5♦	10273.7♦	1159.39♦	448.52♦	9252.71♦	3686.14♦
12160	D	29.35	498.19	166.85	77.96	41.80	2160.44	516.69	449.55	137.51	1615.19	115.41	282.16	20.27
12161	A C	1924.47♦	1361.58♦	25.10♦	22311♦	410.67♦	3413.49♦	707.10♦	55552.5♦	11437.4♦	421.73♦	29.82♦	6771.38♦	474.28♦
12187	C	1065.00	.	707.25	.	6380.87	.	.	.	.	.	60.50	.	538.05
12205	D	36.00*	.	60.00*	.	18.03*	.	81.00*	.	24.33*	.	40.00*	.	12.02*
12236	C	1006.78♦	1361.97♦	155.60♦	11599.2♦	1320.84♦	2344.08♦	534.02♦	19677.7♦	4489.42♦	.	108.25♦	.	880.65♦
12248	D	189.55	294.44	26.00	281.30	25.47	473.98	95.85	455.14	90.98	.	60.42	.	59.12
12256	ABCD	.	.	.	.	.	.	.	.	.	.	.	.	.
12283	D	25.00*	.	35.00*	.	7.30*	.	.	.	.	.	50.00*	.	10.43*
12287	D	430.00*	.	.	.	.	.	51.00*	.	183.01*	.	13.00*	.	46.65*
12294	CD	117.55	1584.29	44.68	1537.52	43.86	3429.61	232.29	3332.24	228.94	.	59.21	.	60.53
12298	D	7.00*	.	15.00*	.	0.88*	.	.	.	.	.	26.00*	.	1.52*
12307	D	2.10	.	11.35	.	0.21	.	106.39	.	2.13	.	32.30	.	0.68
12308	D	32.00*	138.00*	.	34.72*	.	372.00*	.	99.34*	.	67.00*	.	33.00*	.
12317	D	739.83	1003.72	7.85	5965.47	43.65	1102.25	42.34	6887.47	254.80	41.35	9.84	247.65	59.53
12333	D	4.00*	280.00*	30.00*	6.68*	1.00*	.	.	.	.	200.00*	30.00*	6.68*	1.00*
12406	C	994.00*	.	.	.	.	.	.	.	.	420.00*	10.00*	3483.67*	82.95*
12459	D	49.08	69.50	3.82	18.05	1.58	298.86	112.79	91.93	48.31	58.57	16.74	23.71	6.74
12462	A	152.92♦	1765.35♦	117.47♦	2250.51♦	153.05♦	3361.22♦	696.77♦	4189.31♦	906.83♦	987.33♦	582.26♦	1222.82♦	763.08♦
12463	B B	56.00*	102.00*	5.73*	47.67*	2.68*	.	29.00*	.	13.55*	.	9.56*	.	4.47*
12471	B	183.00*	50.00*	14.00*	42.98*	12.03*	169.00*	.	145.26*	.	93.00*	59.00*	79.94*	50.71*
20037	D	37.00*	.	20.00*	.	6.18*	.	.	.	.	.	47.00*	.	14.51*
20165	DC	4.00*	123.00*	25.00*	4.11*	0.83*	307.20*	89.10*	10.25*	2.97*	.	16.00*	.	0.53*
20201	D	2.40*	.	6.00*	.	0.12*	.	50.00*	.	1.00*	.	1400*	.	0.28*
20246	C	1590.00*	.	13.00*	.	172.49*	.	128.00*	.	1698.37*	.	33.00*	.	437.86*
20257	C	107.00*	484.00*	143.00*	432.17*	127.69*	1358.00*	329.00*	1212.58*	293.77*	.	74.00*	.	66.08*
20298	C	0.50*	.	.	.	.	.	.	.	.	.	.	.	.
20319	D	52.00*	.	15.00*	.	6.51*	.	.	.	.	.	8.50*	.	3.69*
20370	DC	14.00*	.	.	.	.	.	.	.	.	.	.	.	.
33333	C	123.69♦	3115.19♦	120.99♦	3192.58♦	123.75♦	5934.84♦	1439.98♦	6132.29♦	1477.61♦	725.70♦	212.01♦	750.44♦	215.41♦
44444	D	15.50♦	333.00♦	3.02♦	249.00♦	0.40♦	599.00♦	48.05♦	447.00♦	6.38♦	270.00♦	30.03♦	202.00♦	3.98♦
55555	C	144.00♦	2949.00♦	78.50♦	3543.75♦	94.33♦	.	.	.	.	423.00♦	62.00♦	508.31♦	74.50♦

underlying data to utilize the methodology. Because plant specific long-term flow and pollutant level averages were generated from different data sources with varying degrees of supporting daily monitoring data, a decision was made to rely on nonparametric analysis procedures. The nonparametric procedures utilized were the k-sample Kruskal-Wallis test, k-sample Van der Waerden test, and Wilcoxon 2-sample test (or equivalent Mann-Whitney U test). These procedures are sensitive to differences in location (i.e., shifts) in the pollutant specific distributions of plant averages being compared, and are equivalent to testing whether the medians of plant averages for the groups of interest are statistically different.

Three types of statistical comparisons were performed to examine the issue of subcategorization, and they are discussed below.

a. Overall Test of Equality of Pollutant Distributions of Subcategories A, B, C and D

For each sampling point (i.e., influent or effluent) with respect to mass (lbs/day) and concentration units (mg/l), pollutant specific averages and discharge flow values (thousand gallons per day) were compared for those plants that belong exclusively to each of the four subcategories. For example, the distribution of influent BOD_5 averages (concentration units of mg/l) for those plants participating exclusively in subcategory A were compared simultaneously to the distributions of averages for plants exclusively in subcategory B, exclusively in subcategory C, and exclusively in subcategory D. Thus, this comparison represents an overall test on a pollutant-specific basis that distributions of averages reported by plants exclusively within each of these subcategories are statistically the same. Rejection of this test of equality indicates that at least one of the subcategory's distributions differs from the other three distribution subcategories. Table IV-2 summarizes results of the Kruskal-Wallis and Van der Waerden nonparametric procedures of the above hypothesis that the four subcategories are the same. As stated earlier, these two procedures are both nonparametric methodologies. While these procedures test the same hypothesis, the individual test statistics for these procedures are based on different quantities (i.e., the Kruskal-Wallis test is based on rank scores while the Van der Waerden test is based on inverse normal scores). Table IV-2 summarizes the results of these two test procedures on a pollutant specific basis. Flow, influent COD (lbs/day), influent TSS (mg/l), and influent TSS (lbs/day) were the only comparisons for which no significant difference was detected.

For each unique subcategory, Table IV-3 presents the pollutant-specific arithmetic average of the plant averages used in the nonparametric analyses. The table illustrates the trend that subcategories A and C tend to have greater pollutant levels than subcategories B and D.

TABLE IV-2

Summary of Kruskal-Wallis and Van der Waerden Tests of Equality of the Four Subcategories

Pollutant	K-W Test	Van der Waerden Test
FLOWKGD = Discharge Flow (K gal/day)		
INBOD = Influent BOD (mg/l)	**	**
EFBOD = Effluent BOD (mg/l)	*	*
INBODLB = Influent BOD (lbs/day)	*	
EFBODLB = Effluent BOD (lbs/day)	**	**
INCOD = Influent COD (mg/l)	**	**
EFCOD = Effluent COD (mg/l)	**	**
INCODLB = Influent COD (lbs/day)		
EFCODLB = Effluent COD (lbs/day)	**	**
INTSS = Influent TSS (mg/l)		
EFTSS = Effluent TSS (mg/l)	*	*
INTSSLB = Influent TSS (lbs/day)		
EFTSSLB = Effluent TSS (lbs/day)	**	**

*Significant statistical difference exists among the four subcategories for the cited pollutant variable. Significant difference has a test statistic whose probability p is between .01 and .05 (i.e. $.01<p<.05$).

**Significant difference has a test statistic whose probability p is less than .01 (i.e., $p<.01$).

TABLE IV-3

Across Plant Mean Pollutant Levels for Unique Subcategory Plants Only

Unique Subcategories	Number of Plants	Flow (Thousand Gallons/Day)	Influent BOD (PPM)	Effluent BOD (PPM)	Influent BOD (lb/D)	Effluent BOD (lb/D)	Influent COD (PPM)
A	2	622.294	1668.06	75.2555	8369.81	223.215	3451.75
B	3	196.952	42.25	7.96795	34.73	6.87941	132.206
C	11	477.105	2385.54	186.372	4097.68	1051.51	4242.9
D	22	296.339	339.166	48.9253	1453.77	20.2995	845.517

Unique Subcategories	Number of Plants	Effluent COD (PPM)	Influent COD (lb/D)	Effluent COD (lb/D)	Influent TSS (PPM)	Effluent TSS (PPM)	Influent TSS (lb/D)	Effluent TSS (lb/D)
A	2	570.632	18273.0	2413.26	1023.23	330.188	5517.05	741.644
B	3	24.488	110.9	20.3407	93	37.5	79.94	31.7591
C	11	750.341	9180.7	16949.78	414.162	136.493	1214.02	311.886
D	22	137.262	4254.0	182.04	308.096	53.7458	987.60	18.0477

b. Comparison of Distribution of Averages of "High" Subcategory Plants with Distribution of Averages of "Low" Subcategory Plants

Having determined that at least one distribution for the averages of plants operating exclusively in one of the four cited subcategories differed for the majority of pollutant variable comparisons, the four subcategories were grouped into "high" and "low" raw waste subcategories. The "high" group was defined to include plants that belonged to subcategory A only, C only, or A and C only. Similarly, the "low" group was defined to include plants that belonged subcategory B only, D only, or B and D only. (That is, plants that operated in A and C only or in B and D only were added to the plants used in the preceding overall analysis.)

Thus, the distribution of averages for plants assigned to the "high" group was compared with the distribution of averages for plants assigned to the "low" group. Again a nonparametric statistical procedure was used to compare the distributions. The Wilcoxon procedure was used for these pollutant-specific two group comparisons. In general, the results of the tests indicate that, on a pollutant-specific basis, the "high" and "low" groups of plants differ statistically. In all cases the two groups were determined to be significantly different (i.e., the probability associated with the Wilcoxon test procedure was less than 0.05). Each of the 13 pollutant-specific comparisons has an associated test statistic probability considerably less than 0.05.

For each group, Table IV-4 presents pollutant-specific arithmetic averages of the plant averages used in the two group (i.e., "high" vs. "low" comparisons) nonparametric analyses.

c. Statistical Comparison of Distributions of Plants within the "High" Group and within the "Low" Group

To determine whether combining A and C plants into the "high" group and B and D plants into the "low" group was reasonable, statistical comparisons were performed within each of these groups using single subcategory plants only. That is, for a specified pollutant, the distribution of averages for "A" only plants was compared to the distribution of averages for "C" only plants. Similarly, pollutant-specific distribution comparisons were made between "B" only and "D" only plants. Because the number of plants involved in these analyses were smaller than in the earlier analyses, the decision was made to utilize the intermediate computer results produced for the Wilcoxon procedure in conjunction with a set of referenced tables for the nonparametric Mann Whitney U-test to provide an exact test of significance rather than relying on the normal theory approximation produced in the computer output. Since the Mann-Whitney U and Wilcoxon 2-Sample procedures are equivalent, the Wilcoxon results can be utilized in this manner. No differences were detected between "A" only and "C" only plants. For "B" only

TABLE IV-4

Across Plant Mean Pollutant Levels for Defined "High" vs. "Low" Group Comparisons

Subcategory Groups	Number of Plants	Flow (Thousand Gallons/Day)	Influent BOD (PPM)	Effluent BOD (PPM)	Influent BOD (lb/D)	Effluent BOD (lb/D)	Influent COD (PPM)
A/C	16	677.570	2186.45	141.801	10296.8	855.952	4222.9
B/D	27	278.382	269.916	41.6055	1100.1	19.0817	702.855

Subcategory Groups	Number of Plants	Effluent COD (PPM)	Influent COD (lb/D)	Effluent COD (lb/D)	Influent TSS (PPM)	Effluent TSS (PPM)	Influent TSS (lb/D)	Effluent TSS (lb/D)
A/C	16	759.061	22777.5	3643.63	660.528	175.143	3989.28	674.405
B/D	27	121.473	3425.4	158.455	286.586	48.1542	896.83	19.6555

and "D" only plants influent BOD5 (mg/l) and influent COD (mg/l) were found to differ. All other comparisons did not indicate differences between "B" and "D" only plants.

3. Summary of Results

The results of the overall comparisons of the individual subcategories substantiate the hypothesis that, in general, pollutant levels do differ by subcategory. (134) In general, no differences were found between A only and C only plants, while two influent pollutant variables (INBOD, INCOD) were found to differ between B only and D only plants. The remainder of B only and D only plant comparisons yielded no statistical differences. Based on the above results and on the fact that A and C plants tend to be higher than B and D plants on flow and pollutant levels, "high" (A, C, A/C) and "low" (B, D, B/D) groups of plants were defined. Comparisons of these two groups consistently indicated significant differences for flow and pollutant levels. A more detailed discussion of the statistical analyses performed is found in "Statistical Support for Pharmaceutical Rulemaking -- September 1983", a report that may be found in the record of this rulemaking. (135)

F. CONCLUSIONS OF SUBCATEGORY ANALYSIS AND DECISION TO MAINTAIN THE EXISTING SUBCATEGORIZATION SCHEME

The analyses of the most recent data discussed above indicate that the subcategorization scheme should separate fermentation and chemical synthesis plants (subcategory A and C plants) from extraction and formulation plants (subcategory B and D plants) in so far as regulations controlling the discharge of conventional and the nonconventional pollutant COD are concerned. Specifically, the analyses show that the influent and effluent conventional pollutant concentrations and COD concentrations as well as discharge flows of subcategory A and C plants are similar and that these same characteristics for B and D plants are also similar. The analyses also indicate that the characteristics of the subcategory A and C plant group are not similar to the corresponding characteristics of the subcategory B and D plant group. These differences indicate that different effluent discharge levels of conventional and nonconventional pollutants would be expected when plants in these groups employed the same control technology. However, the existing subcategory scheme accommodates these differences. Since permitting authorities and the regulated industry are familar with the original subcategorization scheme and the format in the Code of Federal Regulations, the Agency has decided to maintain the existing subcategorization scheme.

SECTION V

WASTE CHARACTERIZATION

A. INTRODUCTION

The Agency, through an extensive data gathering effort, has studied qualitatively and quantitatively the wastewaters of the pharmaceutical industry. This effort provided the baseline data necessary for determining the significant pollutants present in the wastewaters of the pharmaceutical industry and, subsequently, the regulatory scope for the pharmaceutical manufacturing point source category.

As a result of earlier studies, particularly the 1976 Development Document, the EPA had available a limited amount of data which characterized the wastewater discharges of the pharmaceutical manufacturing industry. However, not only were some of these data dated, but for the most part they were related only to such "traditional" pollutant parameters as BOD5, COD, and TSS. Information on the 126 toxic pollutants or classes of toxic pollutants was almost nonexistent. In order to fill this void, the Agency instituted a number of programs aimed at gathering from the pharmaceutical industry additional data on both toxic and traditional pollutants.

Wastewater characterization has been addressed considering the following:

(1) Traditional pollutants
(2) Priority pollutants
(3) Wastewater flow

This section reviews the sources of data and describes the results which provide the basis for the limitations and standards.

B. TRADITIONAL POLLUTANTS

Traditional pollutants considered for regulation are BOD5 COD, TSS, and pH. The reasoning behind their selection and the omission of others is reviewed in Section VI. Three of these, BOD5, TSS, and pH are listed as conventional pollutant parameters and one, COD, is listed as nonconventional.

1. Sources of Data

a. Previous studies - The 1976 Development Document, which supported the 1976 BPT regulations, comprises the main source of previously developed information.

b. 308 Survey - During 1978, the pharmaceutical industry was surveyed to obtain wastewater data and related plant information in support of this new rulemaking effort. The first 308 questionnaire was sent to member companies of the Pharmaceutical Manufacturers Association (PMA). The content of this questionnaire appears as Appendix B of the Proposed Development Document. The second phase of this survey was aimed at the remainder of the industry, and the questionnaire employed is in Appendix D of the Proposed Development Document. Substantial differences in both the form and question content of these forms resulted from shifts of program emphasis between the times of their distribution. Recipients are listed in Appendices C and E of the Proposed Development Document. Survey/response statistics are reviewed in Section II of the Proposed Development Document. Traditional pollutant (BOD_5, COD, and TSS) levels as indicated in the 308 portfolio data, are summarized in Appendix I of the Proposed Development Document. Flow data are summarized in Appendix J of the Proposed Development Document.

c. Long-term data - Plants were selected for further survey of long-term plant log data on end-of-pipe treatment influents and effluents, with respect to BOD_5, COD, and TSS. The development of a long-term data base, covering at least a full year's data for representative plants, was necessary to allow EPA to establish performance averages for representive groups of industry treatment plants in terms of both pollutant levels and effluent variability. A summary of long-term data is presented in Table V-1.

A brief description of plants covered by the long-term data program follows. Some, but not all, of the plants also appear in the screening/verification plant list, subsequently used in priority pollutant analysis.

The flow values presented herein are long-term daily averages developed from the log data submitted by each plant. These may differ from flows reported in the 308 questionnaires due to the different time periods in which they were established and/or different modes of operation during those time periods.

Plant 12015 is a Subcategory D plant which appears among the screening plants and the long-term data plants. Activated sludge and powdered activated carbon are used to treat 0.101 MGD of wastewater from pharmaceutical manufacture.

Plant 12022 is a Subcategory A and C plant that is a screening plant and a long-term data plant. Plant 12022 discharges 1.45 MGD of wastewater from its treatment facilities which include activated sludge, trickling filters, equalization, neutralization, and primary clarification.

Plant 12026 is a Subcategory C plant which is a screening plant, a long-term data plant, and a verification plant. This plant

TABLE V - 1

SUMMARY OF LONG-TERM DATA

PLANT	SUBCAT	FLOWKGD	INBOD	EFBOD	INBODLB	EFBODLB	INCOD	EFCOD	INCODLB	EFCODLB	INTSS	EFTSS	INTSSLB	EFTSSLB	EFCN	EFCNLB
12015	D	100.93	232.64	9.70	192.84	7.81	552.68	43.98	462.49	35.44	123.76	10.76	102.56	8.67	.	.
12022	A C	1448.1	2141.6	110.24	25830	1303.3	.	.	.	.	.	84.85	.	990.99	.	.
12026	C	160.58	3670	108.14	4069.7	136.42	7334.7	1221.8	9700.6	1644.7	87.94	283.68	113.45	377.83	.	.
12036	A	1092.1	1570.8	33.06	14490	293.61	3542.3	444.49	32358	3919.7	1059.1	78.14	9812.4	720.71	.	.
12097	CD	63.99	1577.3	49.39	844.33	30.64	1804.8	37.61	984.73	20.42	.	18.11	.	10.50	0.03	0.02
12098	D	5.52	.	409.88	.	12.81	.	.	.	.	.	392.08	.	16.16	.	.
12117	B	100.86	34.50	1.94	26.48	1.73	95.41	24.49	76.59	28.34	.	16.00	.	12.81	.	.
12123	CD	931.82	.	.	.	.	.	.	.	.	.	.	.	.	0.02	0.15
12160	B	29.35	490.19	166.85	77.97	41.80	2160.4	516.69	449.56	137.51	1615.2	115.41	282.17	20.27	.	.
12161	A CD	1653.3	1538.9	19.78	21142	276.37	4332.6	850.24	59231	11727	795.94	31.55	10680	436.72	.	.
12184	CD	37.49	.	77.01	.	27.05	.	447.54	.	150.19	.	119.25	.	40.19	.	.
12187	C	1065	.	707.25	.	6380.9	.	.	.	.	.	60.50	.	538.05	.	.
12236	C	816.12	741.97	126.17	5149.6	866.26	2009.7	501.90	13277	3451.8	.	61.96	.	431.04	0.25	1.72
12248	D	109.55	294.44	26.00	281.31	25.47	473.90	95.85	455.16	90.90	.	60.42	.	59.12	.	.
12257	ABCD	754.50	2961.7	228.38	18750	1439.5	.	.	.	.	1009.4	715.27	6306.4	4403.8	.	.
12294	CD	117.55	1584.3	44.68	1537.6	43.86	3429.6	232.29	3332.3	228.94	.	59.21	.	60.53	.	.
12307	D	2.10	.	11.35	.	0.21	.	106.39	.	2.13	.	32.30	.	0.60	.	.
12317	D	739.83	1003.7	7.85	5985.6	43.65	1102.3	42.34	6887.7	254.80	41.35	9.84	247.66	59.53	.	.
12420	B D	164.23	.	786.80	.	1097.2	.	.	.	.	.	966.40	.	1328.7	.	.
12439	CD	.	.	495.36	.	.	.	971.20	.	.	.	.	.	.	.	.
12459	D	49.08	69.50	3.82	18.05	1.58	298.86	112.79	91.93	48.31	58.57	16.74	23.71	6.74	.	.
12462	A	208.54	1805	726.81	3074.8	1272.6	5168.2	2499.3	8866.5	4247	2012.9	2020.4	3308.7	3391.8	.	.

Notes Influents & effluents in mg/L, LB = LB/DAY.
Period (.) indicates no data reported.

discharges 0.161 MGD of pharmaceutical process wastewater after treatment by equalization, neutralization, activated sludge, and a polishing pond.

Plant 12036 is a Subcategory A plant which is both a screening plant and a long-term data plant. This plant discharges 0.855 MGD of wastewater from pharmaceutical manufacture, which is treated by activated sludge, trickling filters, an aerated lagoon, and a final stabilization lagoon.

Plant 12097 is a Subcategory C and D plant which is a screening plant as well as a long-term data plant. The chemical waste treatment unit consists of equalization, neutralization, physical-chemical treatment, filtration, and chemical stabilization. This plant discharges 0.640 MGD of wastewater from pharmaceutical processes.

Plant 12098 is a Subcategory D plant. Activated sludge is used to treat pharmaceutical process wastewaters which amount to 0.005 MGD.

Plant 12117 is a Subcategory B and D plant. Activated sludge is used to treat 0.101 MGD of pharmaceutical process wastewater.

Plant 12123 is a Subcategory C and D plant which uses only primary treatment to treat 0.932 MGD of wastewater from pharmaceutical manufacture.

Plant 12160 is a Subcategory D plant. Pharmaceutical process wastewater is treated with activated sludge. The flow of wastewater is 0.029 MGD.

Plant 12161 is an Subcategory A, C, and D plant which appears as both a screening plant and a long-term data plant. Pharmaceutical process wastewaters are treated by neutralization, primary clarification, equalization, activated sludge, and polishing ponds. The amount of wastewater discharged is 1.65 MGD.

Plant 12186 is a Subcategory C and D plant. Activated sludge and an aerated lagoon are used to treat 0.370 MGD of pharmaceutical process wastewaters.

Plant 12187 is a Subcategory C plant. The 1.07 MGD of pharmaceutical process wastewaters is treated with a trickling filter.

Plant 12235 is a Subcategory C plant. Primary treatment is the only treatment used for pharmaceutical process wastewater. (This plant was excluded from the variability analysis since it is not a direct discharger.)

Plant 12236, a Subcategory C plant, is a screening plant, a verification plant, and a long-term data plant. The 0.816 MGD of pharmaceutical process wastewaters are treated with equalization, neutralization, primary sedimentation, and activated sludge.

Plant 12248 is a Subcategory D plant. Activated sludge is used to treat the 0.110 MGD of pharmaceutical process wastewater.

Plant 12257 is a Subcategory A, B, C, and D plant. This plant is both a screening plant and a long-term data plant. The treatment system components are equalization, neutralization, and activated sludge. The amount of pharmaceutical process wastewater discharged is 0.755 MGD.

Plant 12294 is a Subcategory C and D plant. Activated sludge is used to treat the 0.118 MGD of pharmaceutical process wastewater.

Plant 12307 is a Subcategory D plant. Two biological treatment units, an activated sludge unit and an aerated lagoon, are used to treat the 0.002 MGD of pharmaceutical process wastewater.

Plant 12317 is a Subcategory D plant. Activated sludge is used to treat the 0.740 MGD of pharmaceutical process wastewater.

Plant 12420 is a Subcategory B and D plant. This plant is included in both the screening plants and the long-term data plants. Activated sludge is used to treat the 0.164 MGD of pharmaceutical process wastewater.

Plant 12439 is a Subcategory C and D plant. Plant 12439 is both a screening and a long-term data plant. Process wastewaters are treated by equalization, neutralization, primary sedimentation, activated sludge, and an aerated lagoon. Long-term flow data was not available.

Plant 12459 is a Subcategory D plant with a discharge flow of 0.049 MGD. The only method of wastewater treatment utilized is an aerated lagoon.

Plant 12462 is a Subcategory A plant with an average flow of 0.209 MGD. The wastewater treatment employed includes activated sludge and an aerated lagoon.

2. Results and Bases for Limits

The Agency analyzed all traditional pollutant wastewater data submitted to the Agency in order to establish final BPT TSS limitations for all subcategories and alternate BOD_5 and COD limitations for subcategory B, D and E plants. These data were from 51 direct dischargers and consisted of 308 portfolio data, long-term monitoring submissions, and data obtained in comments on the November 1982 proposal. These data appear in Table IV-I. Analysis of these data is discussed in Section VIII.

C. PRIORITY POLLUTANTS

The Settlement Agreement list of priority pollutants and classes of priority pollutants potentially includes thousands of specific compounds. However, for purposes of rulemaking, the Agency selected 126 specific pollutants for consideration. These are listed in Table V-2.

Thirty-three priority pollutants are present in the wastewater of at least one of the plants sampled. However, few of the priority pollutants are individually widespread in their occurrence or high in concentration. The significance of these facts as they affect the choice of pollutants to be regulated is discussed in Section VI.

1. Sources of Data

a. 308 Portfolio Survey - The 308 Portfolio Survey was an invaluable source of information for developing profiles of the pharmaceutical manufacturing industry. Similarly, this survey proved to be a major source of data for waste characterization purposes. Not only did it provide more recent and detailed information on traditional pollutant parameters and wastewater flow characteristics, but the 308 Portfolio was the first major source of data on the use and/or generation of priority pollutants by this industry.

One purpose of the 308 survey was directed at quantifying the nature and extent of priority pollutants in the pharmaceutical industry. Of the 464 pharmaceutical manufacturing plants in the comprehensive 308 Portfolio Data Base, 212 responded to the questions concerning priority pollutants. Of the 115 different priority pollutants identified, chloroform, methylene chloride, phenol, toluene, and zinc were reported as being the most frequently used as raw materials for manufacturing operations. None of the priority pollutants were reported by even as many as ten respondents as being intermediate or final products. Some priority pollutants (such pesticide-related compounds as endrin and heptachlor) were reported as being analyzed in the effluents of the manufacturing plants (most probably due to the mixing of pharmaceutical and nonpharmaceutical wastewaters), but not as being a pharmaceutical manufacturing raw material or final product.

The 308 data base indicates that, although the pharmaceutical manufacturing industry uses and therefore might discharge a large number of priority pollutants, broad occurrence of specific chemical compounds is limited. Priority pollutant information submitted by the pharmaceutical manufacturing plants is presented in Appendix H of the Proposed Development Document.

TABLE V-2

LIST OF EPA-DESIGNATED PRIORITY POLLUTANTS

*No.	Compound	No.	Compound
1B	acenaphthene	70B	diethyl phthalate
2V	acrolein	71B	dimethyl phthalate
3V	acrylonitrile	72B	benzo(a)anthracene
4V	benzene	73B	benzo(a)pyrene
5B	benzidine	74B	3,4-benzofluoranthene
6V	carbon tetrachloride	75B	benzo(k)fluoranthane
7V	chlorobenzene	76B	chrysene
8B	1,2,4-trichlorobenzene	77B	acenaphthylene
9B	hexachlorobenzene	78B	anthracene
10V	1,2-dichloroethane	79B	benzo(ghi)perylene
11V	1,1,1-trichloroethane	80B	fluorene
12B	hexachloroethane	81B	phenanthrene
13V	1,1-dichloroethane	82B	dibenzo(a,h)anthracene
14V	1,1,2-trichloroethane	83B	indeno(1,2,3-C,D)pyrene
15V	1,1,2,2-tetrachloroethane	84B	pyrene
16V	chloroethane	85V	tetrachlorethylene
17B	bis(chloromethyl) ether**	86V	toluene
18B	bis(2-chloroethyl) ether	87V	trichloroethylene
19V	2-chloroethylvinyl ether	88V	vinyl chloride
20B	2-chloronaphthalene	89P	aldrin
21A	2,4,6-trichlorophenol	90P	dieldrin
22A	parachlorometa cresol	91P	chlordane
23V	chloroform	92P	4,4'-DDT
24A	2-chlorophenol	93P	4,4'-DDE
25B	1,2-dichlorobenzene	94P	4,4'-DDD
26B	1,3-dichlorobenzene	95P	alpha-endosulfan
27B	1,4-dichlorobenzene	96P	beta-endosulfan
28B	3,3'-dichlorobenzidine	97P	endosulfan sulfate
29V	1,1-dichloroethylene	98P	endrin
30V	1,2-trans-dichloroethylene	99P	endrin aldehyde
31A	2,4-dichlorophenol	100P	heptachlor
32V	1,2-dichloropropane	101P	heptachlor epoxide
33V	1,3-dichloropropylene	102P	alpha-BHC
34A	2,4-dimethylphenol	103P	beta-BHC
35B	2,4-dinitrotoluene	104P	gamma-BHC (lindane)
36B	2,6-dinitrotoluene	105P	delta-BHC
37B	1,2-diphenylhydrazine	106P	PCB-1242
38V	ethylbenzene	107P	PCB-1254
39B	fluoranthene	108P	PCB-1221
40B	4-chlorophenyl phenyl ether	109P	PCB-1232
41B	4-bromophenyl phenyl ether	110P	PCB-1248
42B	bis(2-chloroisopropyl) ether	111P	PCB-1260
43B	bis(2-chloroethoxy) methane	112P	PCB-1016
44V	methylene chloride	113P	toxaphene

45V	methyl chloride	114M	antimony (total)
46V	methyl bromide	115M	arsenic (total)
47V	bromoform	116	asbestos (fibrous)
48V	dichlorobromomethane	117M	beryllium (total)
49V	trichlorofluoromethane**	118M	cadmium (total)
50V	dichlorodifluoromethane**	119M	chromium (total)
51V	chlorodibromomethane	120M	copper (total)
52B	hexachlorobutadiene	121	cyanide (total)
53B	hexachlorocyclopentadiene	122M	lead (total)
54B	isophorone	123M	mercury (total)
55B	naphthalene	124M	nickel (total)
56B	nitrobenzene	125M	selenium (total)
57A	2-nitrophenol	126M	silver (total)
58A	4-nitrophenol	127M	thallium (total)
59A	2,4-dinitrophenol	128M	zinc (total)
60A	4,6-dinitro-o-cresol	129B	2,3,7,8-tetrachloro-dibenzo-p-dioxin (TCDD
61B	N-nitrosodimethylamine		
62B	N-nitrosodiphenylamine		
63B	N-nitrosodi-n-propylamine		
64A	pentachlorophenol		
65A	phenol	*	V - volatile organics
66B	bis(2-ethylhexyl) phthalate		A - acid extractables
67B	butyl benzyl phthalate		B - base/neutral extractabl
68B	di-n-butyl phthalate		P - pesticides
69B	di-n-octyl phthalate		M - metals

** Deleted from the list of priority pollutants as per 46 FR 2264.

b. PEDCo Reports - Concurrent with the efforts to profile the pharmaceutical manufacturing industry using the 308 Portfolio survey, PEDCo Environmental, Inc. undertook a study to detail the various manufacturing processes/steps that are used in the production of fermentation, extractive, and synthesized pharmaceuticals.

In their studies, PEDCo examined recent industry data and selected those products that comprise the major areas of production for each of the three manufacturing subcategories (i.e., A, B and C). With these major product lines as a base, they then consulted all available literature describing the step-by-step procedures to be used in the production of each substance. As a result, PEDCo was able to identify certain priority pollutants that were known to be used by the pharmaceutical industry. These pollutants are listed in Table V-3.

Because of the size and complexity of the industry and the myriad of products manufactured, it was not practical for a study of this kind to identify every priority pollutant that could be used.

c. RTP Study - In December 1978, EPA's Office of Air Quality Planning and Standards at Research Triangle Park, North Carolina published a document (70) providing guidance on air pollution control techniques for limiting emissions of volatile organic compounds from the chemical synthesis subcategory of the pharmaceutical industry.

As part of this study, the Pharmaceutical Manufacturers Association (PMA) surveyed selected pharmaceutical plants to determine estimates of the ten largest volume volatile organic compounds that each company purchased and the mechanism by which they leave the plant (i.e., sold as product, sent to the sewer, or emitted as an air pollutant).

Table V-4 presents a compilation of the results of this survey. Of the twenty-six reporting companies, 25 indicated that their ten largest volume volatile organics accounted for 80 to 100 percent of their total plant usage. (The other company stated that the ten highest volume compounds only accounted for 50 percent of its total plant usage.) These 26 companies accounted for 53 percent of the domestic sales of ethical pharmaceuticals in 1975.

Included in the list of 46 compounds presented in Table V-4 are seven priority pollutants. These compounds are methylene chloride, toluene, chloroform, benzene, carbon tetrachloride, 1,1,1-trichloroethane, and 1,2-dichlorobenzene.

Table V-5 presents a summary and analysis of the data outlined in Table V-4. Priority pollutants represent approximately 27

TABLE V-3
SUMMARY OF PRIORITY POLLUTANT INFORMATION: PEDCo REPORTS

Priority Pollutants Identified As Used In:

Subcategory A1

benzene
chloroform
1,1-dichloroethylene
1,2-trans-dichloroethylene
phenol
copper
zinc

Subcategory B2

benzene
carbon tetrachloride
1,2-dichloroethane
chloroform
methylene chloride
phenol
toluene
cyanide
lead
mercury
nickel
zinc

Subcategory C3

benzene
carbon tetrachloride
chlorobenzene
chloroethane
chloroform
1,1-dichloroethylene
1,2-trans-dichloroethylene
methylene chloride
methyl chloride
methyl bromide
nitrobenzene
2-nitrophenol
4-nitrophenol
phenol
toluene
chromium
copper
cyanide
lead
zinc

Total No. of Pollutants: 23

1 Reference No. 42
2 Reference No. 41
3 Reference No. 43

TABLE V-4

COMPILATION OF DATA SUBMITTED BY THE PMA FROM 26 MANUFACTURERS OF ETHICAL DRUGS: RTP STUDY

Type of Volatile Organic Compound	Annual Disposition (metric tons)							
	Annual Purchase	Air Emissions	Sewer	Incineration	Contract Haul	Disposal*	Product	Solvent Recovery
Methylene Chloride	10,000	5,310	455	2,060	2,180	-	5	73,400
Skelly Solvent B	1,410	410	23	980	-	-	-	90
Methanol	7,960	2,480	3,550	1,120	410	30	340	-
Toluene+	6,010	1,910	835	1,590	1,800	-	-	23,850
Acetone+	12,040	1,560	2,580	4,300	770	-	2,210	40,760
Dimethyl Formamide+	1,630	1,350	60	380	120	-	-	5,100
Ethanol	13,230	1,250	785	915	200	-	10,000	7,570
Isopropanol+	3,850	1,000	1,130	1,150	470	25	3,090	3,880
Amyl Alcohol+	1,430	775	-	-	0	-	9	76,900
Ethyl Acetate	2,380	710	1,110	480	80	-	-	715
Chloroform	500	280	23	-	175	17	-	1,210
Benzene+	1,010	270	350	150	80	-	90	20,500
Ethyl Ether	280	240	12	-	30	-	-	110,800
Methyl Isobutyl Ketone+	260	260	-	-	-	-	65	6,160
Carbon Tetrachloride	1,850	210	120	1,510	-	-	-	-
Xylene+	3,090	170	510	1,910	140	-	3	9,400
Methyl Ethyl Ketone	260	170	30	60	-	-	-	6,460
Trichloroethane	135	135	-	-	-	-	-	-
Hexane	530	120	-	100	475	-	-	25,670
Amyl Acetate	285	120	165	-	-	-	-	3,510
Isopropyl Acetate	480	105	45	230	-	-	-	1,840
Methyl Cellosolve	195	90	100	-	-	-	-	360
Butanol+	320	85	30	5	130	-	110	1,040
Isobutyraldehyde	85	40	40	-	-	-	-	145
Acetonitrile	35	30	6	-	-	-	-	125
Tetrahydrofuran	4	-	-	4	-	-	-	-
Isopropyl Ether	25	12	12	-	-	-	-	12
Acetic Acid	930	12	770	-	-	-	160	1,040
Acetic Anhydride	1,265	8	550	-	-	-	410	300

TABLE V-4
(Cont'd)

Type of Volatile Organic Compound	Annual Disposition (metric tons)							
	Annual Purchase	Air Emissions	Sewer	Incineration	Contract Haul	Disposal*	Product	Solvent Recovery
Dimethylacetamide	95	7	-	-	90	-	-	-
Formaldehyde	30	5	20	-	-	-	1	-
Dimethylsulfoxide	750	4	210	535	-	-	-	4,760
1,4-Dioxane	43	2	-	-	41	-	-	-
o-Dichlorobenzene	60	1	60	-	-	-	-	7,060
Diethyl Carbonate	30	1	20	-	-	-	7	-
Blenda (Amoco)	530	-	-	-	-	-	530	-
Ethyl Bromide	45	-	45	-	-	-	-	7,170
Cyclohexylamine	3,930	-	-	-	-	-	3,930	-
Methyl Formate	415	-	310	-	50	-	60	1,130
Formamide	440	-	290	-	110	-	30	-
Ethylene Glycol	60	-	60	-	-	-	-	60
Diethylamine	50	50	3	-	-	-	-	300
Freons	7,150	6	-	-	-	-	7,145	-
Diethyl-ortho Formate	54	-	21	-	-	-	33	-
Pyridine	3	-	3	-	-	-	-	-
Polyethylene Glycol 600	3	-	-	-	-	-	3	-
TOTALS	85,170	19,190	14,880	17,480	7,350	72	27,700	441,320

Source - 26 member companies of the Pharmaceutical Manufacturers Association (PMA) reported these data which they feel represent 85 percent of the volatile organic compounds used in their operations; these reporting companies caccount for approximately 53 percent of the 1975 domestic sales of ethical pharmaceuticals.

*Deepwell or landfill.

+Annual disposition does not closely approximate annual purchase.

TABLE V-5

SUMMARY OF VOLATILE ORGANIC COMPOUND EMISSION DATA: RTP STUDY

Item:	Amount: Total Compounds (total of 46)	Amount: Priority Pollutants (total of 7)
Amount purchased (metric tons)	85,170	19,565
Amount discharged (metric tons)	86,142	19,595
Amount recovered within the plant (metric tons)	441,320	126,020
Total amount used in plant (sum of items 1 and 3) (metric tons)	526,490	145,585
Percent recovered	83.8%	86.6%
Percent of total used that is discharged	16%	13.5%
Percent of total used that is discharged to sewer	2.7%	1.3%
Percent of total discharged that is discharged to sewer	16.7%	9.7%

percent of the total volatile organic usage in the segment of the industry analyzed. However, priority pollutants represent only 13 percent of the total mass discharge of volatile organics to the plant sewers.

Table V-5 also indicates that of the total quantity of all volatile organic compounds discharged, only a fraction (16.7 percent) is discharged via wastewater. The priority pollutant volatile organics are discharged with the wastewater in an even lower proportion (9.7 percent).

d. RSKERL/ADA Study - The Robert S. Kerr Environmental Research Laboratory at Ada, Oklahoma (RSKERL/ADA) conducted for the Effluent Guidelines Division (EGD) an applied research study entitled "Industry Fate Study" (90). The purpose of this report was to determine the fate of specific priority pollutants as they pass through a biological treatment system. In the course of this study, priority pollutants associated with the manufacture of pharmaceuticals at two industrial facilities were identified. The results of these wastewater analysis are reported in Appendix K of the Proposed Development Document. These priority pollutants are listed in Table V-6 with similar data from the RTP Study, the PEDCo Reports, and the Screening/Verification Program. RSKERL/ADA data are limited since they are from only two plants. However, they do serve to supplement the other data in Table V-6.

e. Wastewater Sampling Programs - Information on priority pollutants from the aforementioned reports and surveys was largely qualitative, although the 308 Portfolio did contain some quantitative data. Moreover, those reports did not always distinguish between pollutants used by a plant and pollutants in the final effluent. To expand the data base, EPA initiated the Screening and Verification sampling program under which a number of plants representative of the pharmaceutical manufacturing industry were sampled for priority pollutants and for the traditional pollutants (BOD_5, COD, and TSS) in a two phase program. The first phase, called the screening phase, involved 26 plants and covered a broad cross-section of the industry. This was followed by a verification phase which limited the sampling to only five carefully selected plants. Augmentation of the existing data base with the analytical results of the Screening/Verification program along with the qualitative information from the other studies provided the Agency with sufficient information with which to characterize the industry's wastewaters.

The screening program was conducted to determine the presence or absence of priority pollutants in the wastewaters of a number of pharmaceutical plants and to provide a quantitative estimate of those present. The information was then used to limit the search to specific priority pollutants for the verification program and to identify plants likely to provide information to characterize accurately the industry wastewaters.

TABLE V-6
SUMMARY OF MAJOR* PRIORITY POLLUTANTS IDENTIFIED
FROM MULTIPLE SOURCES OF INFORMATION

Priority Pollutant	RTP Study	PEDCo Reports	RSKERL/ ADA	308 Portfolio	Screening & Verification Sampling Program
Acid Extractables					
65 Phenol		X	X	X	X
Base Extractables					
25 1,2-Dichlorobenzene	X				
Volatile Organics					
4 Benzene	X	X	X	X	X
6 Carbon Tetrachloride	X	X		X	
11 1,1,1 - Trichloroethane	X				
23 Chloroform	X	X		X	X
29 1,1-Dichloroethylene		X			
30 1,2-Trans-Dichloroethylene		X			
38 Ethylbenzene			X		X
44 Methylene Chloride	X	X		X	X
86 Toluene	X	X		X	X
Metals					
119 Chromium			X	X	X
120 Copper		X	X	X	X
122 Lead		X	X	X	X
123 Mercury			X	X	X
124 Nickel				X	X
128 Zinc		X	X	X	X
Others					
121 Cyanide		X	X	X	X

* For this table toxic compounds were defined as "major" priority pollutants in accordance with the following criteria for each data source:

RTP - The pollutant was reported by at least one plant (26 plants reporting)
PEDCo - The pollutant was found in two or more subcategories (130 plants studied).
RSKERL/ADA - The pollutant was reported by at least one plant (2 plant study).
308 - The pollutant was identified by 25 or more plants (464 plants surveyed).
Screening/Verification - The pollutant was detected at ten or more plants (26 plants sampled).

Major processing areas and subcategory coverage, range of wastewater flows, and an assortment of both in-plant and end-of-pipe treatment technology/techniques were used as selection criteria for the screening plants. Multiple subcategory plants, as well as plants within only one subcategory, were deliberately sought. Similarly, EPA made a special effort to include plants with wastewater flows less than 1000 GPD and more than 2.5 MGD. Descriptions of the plants and of the sampling points are presented in Appendix O of the Proposed Development Document.

Included in the screening group were nine direct dischargers, seven indirect dischargers, three zero dischargers and seven plants which utilized more than one mode of discharge. In the latter group there were three plants that were both indirect and zero dischargers, three plants that were both direct and zero dischargers and one plant that utilized all three modes of discharge. The screening plants and their subcategory designations are listed below:

Plant ID No.	Subcategory	Plant ID No.	Subcategory
12015	D	12210	BC
12022	AC	12231	AD
12026	C	12236	C
12036	A	12248	D
12038	ABCD	12256	ABCD
12044	AD	12257	ABCD
12066	BCD	12342	ACD
12097	CD	12411	BCD
12108	ACD	12420	BD
12119	AB	12439	CD
12132	AC	12447	ABCD
12161	ACD	12462	A
12204	ABCD	12999	CD

The verification program was developed to confirm the presence of the priority pollutants that were identified by the screening program and to provide quantitative pollutant data with a known precision and accuracy. The analytical results from these episodes serve as a basis for technology selection and for use in the rulemaking effort.

Selection of the five plants for the verification program was based in part on general criteria presented in Section II of the Proposed Development Document. A criterion mentioned earlier and which weighed heavily in the final selection process was the assortment of major priority pollutants that were being used as raw materials for the manufacture of pharmaceuticals. Table V-7 lists the priority pollutants which appear in the waste streams of each of the screening plants. Other plant specific

TABLE V-7

SUMMARY OF PRIORITY POLLUTANT OCCURRENCE

SCREENING PLANT DATA

No.*	Compound	No. of Occurrences Detected Influent (25)**	No. of Occurrences Detected Effluent (20)**	Above 500 ug/L in Effluent (20)**	Max. Effluent Level ug/L
1B	acenaphthene	4 (16%)			
2V	acrolein				
3V	acrylonitrile				
4V	benzene	15 (60%)	3 (15%)		120
5B	benzidine	1 (4%)			
6V	carbon tetrachloride	3 (12%)	1 (5%)		16
7V	chlorobenzene	5 (20%)			
8B	1,2,4-trichlorobenzene				
9B	hexachlorobenzene				
10V	1,2-dichloroethane	5 (20%)	4 (20%)	1	500
11V	1,1,1-trichloroethane	8 (32%)	4 (20%)		33
12B	hexachloroethane				
13V	1,1-dichloroethane	4 (16%)			
14V	1,1,2-trichloroethane	4 (16%)	1 (5%)		14
15V	1,1,2,2-tetrachloroethane				
16V	chloroethane	2 (8%)			
17B***	bis(chloromethyl) ether				
18B	bis(2-chloroethyl) ether	1 (4%)	1 (5%)		20
19V	2-chloroethylvinyl ether				
20B	2-chloronaphthalene				
21A	2,4,6-trichlorophenol	1 (4%)			
22A	parachlorometa cresol				
23V	chloroform	16 (64%)	9 (45%)		110
24A	2-chlorophenol	1 (4%)			
25B	1,2-dichlorobenzene	2 (8%)			
26B	1,3-dichlorobenzene				
27B	1,4-dichlorobenzene	1 (4%)			
28B	3,3'-dichlorobenzidine				
29V	1,1-dichloroethylene	5 (20%)	2 (10%)		180
30V	1-2-trans-dichloroethylene	1 (4%)			
31A	2,4-dichlorophenol				
32V	1,2-dichloropropane				
33V	1,3-dichloropropylene				
34A	2,4-dimethylphenol	1 (4%)	1 (5%)		15
35B	2,4-dinitrotoluene	2 (8%)	1 (5%)		14
36B	2,6-dinitrotoluene	1 (4%)			
37B	1,2-diphenylhydrazine	1 (4%)			
38V	ethylbenzene	12 (48%)	2 (10%)		160
39B	fluoranthene	1 (4%)			

TABLE V-7 (continued)

No.*	Compound	No. of Occurrences Detected Influent (25)**	No. of Occurrences Detected Effluent (20)**	Above 500 ug/L in Effluent (20)**	Max. Effluent Level ug/L
40B	4-chlorophenyl phenyl ether				
41B	4-bromophenyl phenyl ether				
42B	bis(2-chloroisopropyl) ether	3 (12%)	2(100%)		
43B	bis(2-chloroethoxy) methane				
44V	methylene chloride	17 (68%)	15 (75%)	2	2600
45V	methyl chloride	1 (4%)			
46V	methyl bromide	1 (4%)			
47V	bromoform	1 (4%)	1 (5%)		44
48V	dichlorobromomethane				
49V***	trichlorofluoromethane				
50V***	dichlorodifluoromethane				
51V	chlorodibromomethane				
52B	hexachlorobutadiene				
53B	hexachlorocyclopentadiene				
54B	isophorone	2 (8%)			
55B	naphthalene	1 (4%)			
56B	nitrobenzene	1 (4%)			
57A	2-nitrophenol	3 (12%)			
58A	4-nitrophenol	3 (12%)	1 (5%)		15
59A	2,4-dinitrophenol				
60A	4,6-dinitro-o-cresol		1 (5%)		15
61B	N-nitrosodimethylamine				
62B	N-nitrosodiphenylamine	1 (4%)			
63B	N-nitrosodi-n-propylamine				
64A	pentachlorophenol	2 (8%)			
65A	phenol	14 (56%)	4 (20%)		120
66B	bis(2-ethylhexyl) phthalate	10 (40%)	8 (40%)		68
67B	butyl benzyl phthalate	2 (8%)			
68B	di-n-butyl phthalate	3 (12%)	4 (20%)		15
69B	di-n-octyl phthalate				
70B	diethyl phthalate	1 (4%)	1 (5%)		20
71B	dimethyl phthalate				
72B	benzo(a) anthracene				
73B	benzo(a) pyrene				
74B	3,4-benzofluoranthene				
75B	benzo(k) fluoranthane				
76B	chrysene				
77B	acenaphthylene				
78B	anthracene	2 (8%)			
79B	benzo(ghi) perylene				
80B	fluorene	1 (4%)			
81B	phenanthrene	1 (4%)			
82B	dibenzo(a,h) anthracene				

TABLE V-7 (continued)

No.*	Compound	No. of Occurrences Detected Influent (25)**	Effluent (20)**	Above 500 ug/L in Effluent (20)**	Max. Effluent Level ug/L
83B	indeno(1,2,3-C,D)pyrene				
84B	pyrene				
85V	tetrachloroethylene	4 (16%)	2 (10%)		18
86V	toluene	16 (64%)	5 (25%)	1	1350
87V	trichloroethylene	3 12%)	2 (10%)		11
88V	vinyl chloride				
89P	aldrin				
90P	dieldrin				
91P	chlordane				
92P	4,4'-DDT				
93P	4,4'-DDE				
94P	4,4'-DDD				
95P	alpha-endosulfan				
96P	beta-endosulfan				
97P	endosulfan sulfate				
98P	endrin				
99P	endrin aldehyde				
100P	heptachlor				
101P	heptachlor epoxide				
102P	alpha-BHC				
103P	beta-BHC				
104P	gamma-BHC (lindane)				
105P	delta-BHC				
106P	PCB-1242				
107P	PCB-1254				
108P	PCB-1221				
109P	PCB-1232				
110P	PCB-1248				
111P	PCB-1260				
112P	PCB-1016				
113P	toxaphene				
114M	antimony (total)	10 (40%)	3 (15%)		90
115M	arsenic (total)	5 (20%)	3 (15%)		30
116	asbestos (fibrous)				
117M	beryllium (total)	4 (16%)	2 (10%)		2.0
118M	cadmium (total)	8 (32%)	5 (25%)		40
119M	chromium (total)	23 (92%)	15 (75%)		304
120M	copper (total)	24 (96%)	16 (80%)		63
121	cyanide (total)	11 (44%)	10 (50%)		7700
122M	lead (total)	13 (52%)	9 (45%)		400
123M	mercury (total)	16 (64%)	12 (60%)		1.58
124M	nickel (total)	14 (56%)	9 (45%)		310
125M	selenium (total)	7 (28%)	3 (15%)		56

TABLE V-7 (continued)

No.*	Compound	No. of Occurrences Detected Influent (25)**	Detected Effluent (20)**	Above 500 ug/L in Effluent (20)**	Max. Effluent Level ug/L
126M	silver (total)	7 (28%)	3 (15%)		40
127M	thallium (total)	5 (20%)	4 (20%)		29
128M	zinc (total)	21 (84%)	17 (85%)		403
129B	2,3,7,8-tetrachloro-dibenzo-p-dioxin (TCDD)				

* V - volatile organics
A - acid extractables
B - base/neutral extractables
P - pesticides
M - metals

** Indicates number of plant streams.

*** Deleted from further consideration by 46 FR 10723 and 46 FR 2266.

characteristics that were considered in the final selection process are summarized below on a plant-by-plant basis.

Plant No. 12411. Plant 12411 was found to have in its waste streams three of the common priority pollutants used by the industry: methylene chloride, chloroform, and toluene. The presence of these pollutants, a process area involving three subcategories, utilization of a solvent recovery system, and pretreatment of wastewater followed by aerated lagoon treatment justified this plant for verification sampling.

Plant No. 12038. This plant was selected for sampling in the verification program because of its use of potential BAT technology including steam stripping, aerobic biological treatment, and thermal oxidation. The presence of several priority pollutants, including nitrosamines, the existence of a large historical data base relating to nitrosamines, and the inclusion of both pesticides and pharmaceuticals in the manufacturing operations at the plant were factors also considered in the selection process.

Plant No. 12236. Limitation to one subcategory, reported flows of about 0.81 MGD, use of cyanide as raw material, and treatment of its wastewaters by the activated sludge process qualified this plant for the verification program. Also of interest were its use of in-plant treatment processes including cyanide destruction and solvent recovery.

Plant No. 12026. A treatment train consisting of activated sludge, aerated lagoon, and polishing pond after in-plant treatment by solvent recovery were the reasons this plant was selected for verification sampling. It has a reported flow of 0.101 MGD and belongs in Subcategory C.

Plant No. 12097. Plant 12097 is a multiple subcategory (C, D) plant with a reported flow of 0.035 MGD. Its use of cyanide in production and a treatment system consisting of in-plant solvent recovery, activated sludge, and physical-chemical treatment were considered in selecting this plant.

2. Results of Screening/Verification Program

A plant-by-plant summary of the analytical results from the sampling program is presented in Appendix G of the Proposed Development Document.

Table V-8 lists the traditional and priority pollutants that were identified and the frequency at which they were found to be present in the waste streams. Although a number of the priority pollutants appeared in the waste stream, only a few of them were sufficiently repetitive to cause concern. Pesticides and PCBs were detected in one of the plant's effluent but were not due to pharmaceutical-related activity.

TABLE V-8

ANALYSIS OF PRIORITY POLLUTANT CONCENTRATIONS (ug/l)
Screening/Verification Data Base

Influent

Based on Values Equal to or Greater than (10 ug/l)

Priority Pollutant		Number of Plants	Number of Observations	Minimum	Maximum	Median	Mean	Standard Deviation
Acid Extractables								
21	2,4,6-trichlorophenol	1	1	20	20	20	20	.
24	2-chlorophenol	1	1	50	50	50	50	.
31	2,4-dichlorophenol	1	1	10	10	10	10	.
34	2,4-dimethylphenol	1	1	62	62	62	62	.
57	2-nitrophenol	2	2	23	119	71	71	68
58	4-nitrophenol	2	2	181	1600	891	891	1003
60	4,6-dinitro-o-cresol	1	1	15	15	15	15	.
64	pentachlorophenol	2	2	42	62	52	52	14
65	phenol	20	36	12	51,000		7529	15,499
Base Neutrals								
1	acenaphthene	2	2	35	92	64	64	40
25	1,2-dichlorobenzene	2	2	12	20	16	16	6
27	1,4-dichlorobenzene	1	1	90	90	90	90	.
35	2,4-dinitrotoluene	1	1	68	68	68	68	.
42	bis(2-chloroisopropyl) ether	2	2	300	448	374	374	150
54	isophorone	2	2	11	1014	513	513	709
62	N-nitrosodiphenylamine	1	1	12	12	12	12	.
66	bis(2-ethylhexyl)	8	10	10	760	105	157	222

67	butyl benzyl phthalate	3	3	12	719	18	250	406
68	di-n-butyl phthalate	4	4	18	20	20	19	1
70	diethyl phthalate	1	1	61	61	61	61	.
78	anthracene	1	1	14	14	14	14	.
80	fluorene	1	1	27	27	27	27	.
81	phenanthrene	1	1	14	14	14	14	.
<u>Volatile Organics</u>								
4	benzene	11	19	15	10,300	120	1586	3186
6	carbon tetrachloride	3	5	12	300	18	81	124
7	chlorobenzene	4	6	11	123,000	3206	36,405	55,025
10	1,2-dichloroethane	8	17	12	14,000	62	2516	4944
11	1,1,1-trichloroethane	8	11	17	1,300	22	169	383
14	1,1,2-trichloroethane	2	2	19	20	20	20	1
15	1,1,2,2-tetrachloro-ethane	1	1	20	20	20	20	.
23	chloroform	14	22	26	1620	170	396	470
29	1,1-dichloroethylene	1	1	230	230	230		.
33	1,3-dichloropropylene	1	1	100	100	100	100	.
38	ethylbenzene	9	18	11	42,000	24	3237	10,020
44	methylene chloride	18	31	16	200,000		11,356	37,952
45	methyl chloride	2	4	59	13,000	8,600	7,565	5,439
47	bromoform	1	2	12	12	1.2	12	.
49	trichlorofluoromethane	1	1	970	970	970	970	.
65	tetrachloroethylene	8	4	14	36	31	28	10
86	toluene	14	29	50	227,000	310	21,075	50,223
87	trichloroethylene	2	2	11	124	68	68	80

88	vinyl chloride	1	1	14	14	14	14	
Metals								
114	antimony	8	9	12	210	27	45	62
115	arsenic	4	4	13	43	31	29	12
118	cadmium	4	5	10	40	32	25	14
119	chromium	18	30	13	650	39	117	155
120	copper	21	39	14	7030		571	1689
122	lead	9	13	14	500	63	119	139
*123	mercury	16	31	0.1	0.1		3.9	9.6
124	nickel	11	19	15	630	39	103	146
125	selenium	4	5	16	60	28	31	17
126	silver	2	2	24	40	32	32	11
127	thallium	2	3	18	43	40	34	14
128	zinc	20	37	29	2070		363	475
Other								
121	cyanide	8	16	18	540	140	153	135
130	BOD (mg/l)	18	33	98	11,300	1,090	2,183	2,688
131	COD (mg/l)	18	33	128	25,900	2,641	3,994	4,868
132	TSS (mg/l)	15	31	10	3,480	218	649	837

Effluent

Priority Pollutant		Number of Plants	Number of Observations	Minimum	Maximum	Median	Mean	Standards Deviation
Acid Extractables								
34	2,4-dimethylphenol	1	1	15	15	15	15	-
58	4-nitrophenol	1	1	15	15	15	15	-
65	phenol	9	12	10	126	23	47	46
Base Neutral								
42	bis(2-chloroisopropyl) ether	1	1	181	181	181	181	-
66	bis(2-ethylhexyl) phthalate	6	9	10	68	30	36	21
68	di-n-butyl phthalate	2	2	10	15	13	13	4
70	diethyl phthalate	2	2	10	20	15	15	7
80	fluorene	1	1	10	10	10	10	-
Volatile Organics								
2	acrolein	1	1	100	100	100	100	-
4	benzene	1	1	120	120	120	120	-
6	carbon tetrachloride	2	2	16	61	39	39	32
10	1,2-dichloroethane	5	9	22	500	62	158	169
11	1,1,1-trichloroethane	4	6	10	33	20	21	11
23	chloroform	6	7	14	150	90	79	55
29	1,1-dichloroetyhlene	1	1	180	180	180	180	-
38	ethylbenzene	3	3	14	22	17	18	4
44	methylene chloride	14	21	12	8100	120	863	1852
45	methyl chloride	2	4	100	410	310	283	139

49	trichlorofluoromethane	1	1	420	420	420	420	-
85	tetrachloroethylene	1	1	18	18	18	18	-
86	toluene	4	4	100	315	185	196	89
87	trichloroethylene	1	1	14	14	14	14	-
Metals								
114	antimony	2	5	20	51	31	34	15
115	arsenic	3	6	10	20	12	13	4
118	cadmium	1	1	40	40	40	40	-
119	chromium	13	21	10	304	27	77	94
120	copper	13	25	14	106	31	38	24
122	lead	9	14	13	400	33	64	100
*123	mercury	11	19	0.1	1.3	0.7	0.7	0.5
124	nickel	8	16	19	300	51	83	81
125	selenium	2	5	12	56	45	42	18
126	silver	1	1	40	40	40	40	-
127	thallium	2	5	10	129	11	37	52
128	zinc	17	32	13	2009	118	240	378
Other								
121	cyanide	6	11	30	7700	100	827	2282
**130	BOD	13	25	10	1090	84	155	211
**131	COD	13	30	216	3293	528	911	921
**132	TSS	13	29	0.1	1200	88	237	338

*All non-remarked data considered

**Expressed in mg/l

Wastewaters entering and leaving the end-of-pipe wastewater treatment train were among those waste streams that were sampled in this program. Concentration levels for many of the priority pollutants in the final effluent are relatively low. The reasons for this are: (1) in-plant treatment and process controls to minimize specific wastewater pollution, (2) dilution of concentrated process wastewater with other less concentrated wastewaters, and (3) incidental removal of some specific chemical pollutants by end-of-pipe treatment.

D. WASTEWATER FLOW CHARACTERISTICS

In order to characterize the waste from plants in the pharmaceutical industry, a determination was made from 308 data of the total industry wastewater flow rate and its component process subcategory flows for direct and indirect dischargers. In Table V-9, actual plant flow data are compared to flows thought to be characteristic of the various subcategories. These are based on actual single-subcategory plant total flow adjusted for the number of occurrences for each subcategory. The averages of these flows are also useful as base-case flows for cost analysis.

Approximately 70 percent of the direct and indirect dischargers (not including zero dischargers) within the 308 Data Base reported wastewater flows totaling about 80 MGD. Of this, about 45 MGD is from 25 reported direct dischargers. (This estimate does not include the process flow from plant 12256 which has not been accurately determined.)

Using the reported single-subcategory plant flows as a means of estimating flow attributable to each subcategory, the plants not reporting flow are estimated to add another 13 MGD (93 MGD total estimated discharge flow for the plants in the data base). Table V-9 summarizes reported and estimated wastewater flows for the industry as represented by the 308 Data Base; this information is more comprehensively covered in Appendix J of the Proposed Development Document.

E. PRECISION AND ACCURACY PROGRAM

The Precision and Accuracy (P/A) Study is a fundamental, continuing program to insure the reliability and validity of analytical laboratory techniques. The P/A program is not utilized as a separate data base in support of the proposed limitations, but is used primarily to substantiate the data illustrated in Table V-10.

Precision refers to the reproducibility among replicate observations. In an Analytical Quality Control Program, precision is determined not on reference standards, but by the use of actual wastewater samples which cover a wide range of

TABLE V- 9

ANALYSIS OF WASTEWATER FLOW CHARACTERISTICS
(BASIS: 308 DATA)

Direct Discharger Flow (All plants reporting data)				45 MGD
(Without Inclusion of Plant 12256)				(15)
Indirect Discharge Reporting Flow (178 plants)				35
Total Flow Reported				80 MGD
Total Single Subcategory Flow/No. plants (with data)				
Subcat. A	1.30/3	=	0.435	
Subcat. B	0.67/15	=	0.045	
Subcat. C	8.80/34	=	0.260	
Subcat. D	9.80/131	=	0.075	
Indirect Discharger Estimated Flow for Non-Reporting Plants				
Subcat. A	0.435 X 5 occurrences	=	2.175 MGD	
Subcat. B	0.045 x 16 occurrences	=	0.72	
Subcat. C	0.260 x 14 occurrences	=	3.64	
Subcat. D	0.075 x 90 occurrences	=	6.75	
Estimated Unreported Flow				13
Total Discharge Flow Estimated for Data Base				93 MGD
(Without Inclusion of Plant 12256)				(63)

TABLE V - 10

COMPARISON OF PRECISION & ACCURACY (P&A) DATA - PLANT 12236

Priority Pollutants (ug/l)	P&A Sample Analyses				Comparison of Other Data Sources				
	Radian		TRW		Screening		Verification		308
	Influent	Effluent	Influent	Effluent	Influent	Effluent	Influent	Effluent	
Volatile Organics									
44V Methylene Chloride	916,000	-	22,000	-	40,000	200	14,000-80,000	15,000-8,100	
86V Toluene	24,000	-	36,000	-	33,000	1350	56,000-71,000	10	reported as used
45V Methyl chloride	33,000	-	18,000	-	1,300	-	8,000-13,000	100,410	
23V Chloroform	24-29	-	17-21	2-3	30	-	10	10	
4V Benzene	7-9	-	4	T	40	-	10-27	10	reported as used
10V 1,2-Dichloroethane	57-83	-	51-56	13	-	-	68-650	62-300	
30V Trans-1,2-Dichloroethylene	4-6	-	2	T					
38V Ethylbenzene	19-25	-	12-13	T	12	-	10-12	10	
49V Trichlorofluoromethane	ND	-	7	ND					
29V 1,1-Dichloroethylene	ND	-	9-12	ND	190	-	10-16	10	
13V 1,1-Dichloroethane	ND	-	1	ND					
Acid Extractables									
65A Phenol	6-7	ND	9-10	T-1					
24A 2-Chlorophenol	ND	ND	ND-2	T					
57A 2-Nitrophenol	ND	ND	ND	T-1					
34A 2,4-Dimethylphenol	ND	ND	ND	ND-1					
21A 2,4,6-Trichlorophenol	ND	ND	T	1					
64A Pentachlorophenol	ND	ND	T-1	T					
Base/Neutral Extractables									
42B Bis(2-chloroisopropyl)ether	ND	ND	ND	ND-1					
36B 2,6-Dinitrotoluene	ND	ND	1-4	T					
56B Nitrobenzene	ND	ND	ND-T	3					
35B 2,4-Dinitrotoluene	ND	ND	ND	2					
70B Diethyl phthalate	-	-	ND	1					
68B Di-N-Butyl phthalate	1	1	12-13	13-25					
67B Butyl benzyl phthalate	ND	ND	ND	1					

ND = not detected
T = trace or less than 1
- = no data

concentrations and a variety of interfering materials usually encountered by the analyst.

Accuracy refers to a degree of difference between observed and actual values. Accuracy should also be determined on actual wastewater samples routinely analyzed and, preferably, on the same series as those used in the precision determinations.

Through this process, data obtained by analysis of multiple samples were compared to demonstrate that (a) they present clearcut evidence that the analyst is indeed capable of analyzing the samples for that particular parameter (i.e., he has the standard method under control and is capable of generating valid data) and (b) the data can be used in the evaluation of daily performance in reference to replicate samples, spiked samples, and in the preparation of quality control charts. This type of quality assurance program is applicable to and can be adapted for all types of analytical procedures.

TRW and Radian performed, on a split-sample basis, a P/A study on a series of 24-hour composite influent and effluent samples collected from a single pharmaceutical manufacturing plant (12236) representing Subcategory C (chemical synthesis). Extraction of the non-volatile organic (NVO) sample for the basic recovery study was performed using continuous liquid/liquid extractors. Volatile Organics (VOAs) were analyzed using the purge-and-trap procedure adopted for this study. Standard spiking levels were used by both laboratories as specified by EPA. The extract volumes were selected depending upon expected concentration of the priority pollutants in the sample and the established linear response range of the GC/MS instruments. All pollutants detected in the samples are summarized in Table V-10.

The values reported by the two laboratories for priority pollutants are well within the detection limits of GC/MS analysis, with the exception of the values reported for methylene chloride, toluene, and chloromethane. The values from the two laboratories are also moderately close to each other. In some cases, methylene chloride, toluene, and chloromethane were present in such high concentrations that, although reasonable recovery and quantitation could be obtained, the results are not meaningful due to instrument saturation. The high levels of these compounds apparently did interfere with the analysis of other priority pollutants. Recoveries of 2,4-dimethylphenol, benzidine, and the phthalates were low and erratic.

The detection of some of the priority pollutants could be the result of contamination by sources in the field or laboratory. It is common practice to equip automatic composite samplers with polyvinyl chloride (tygon) tubing. Phthalates are widely used as plasticizers to ensure that the tubing remains soft and flexible. These compounds have a tendency to migrate to the surface of the tubing and leach out into water passing through the sample

tubing. Results of analyses shown in Table V-10 indicate the phthalates vary between laboratories. Sample contamination is possible and, therefore, some of the results cannot be conclusively attributed to the wastewater.

SECTION VI

SELECTION OF POLLUTANT PARAMETERS

A. INTRODUCTION

The priority (toxic) and traditional (conventional and nonconventional) pollutants characterized in Section V are discussed in this section in light of their occurrence in pharmaceutical industry wastewaters and their effects on the environment.

B. TRADITIONAL POLLUTANTS

The Clean Water Act of 1977 (P.L. 95-217) requires the Administrator to establish effluent limitations and standards for traditional pollutants. Among these, the conventional parameters of biochemical oxygen demand (BOD), total suspended solids (TSS), pH, and oil and grease and the nonconventional parameters of chemical oxygen demand (COD), total organic carbon (TOC), color, ammonia, nitrogen, and phosphorus were considered. Those chosen as representative of specific and persistent pollution problems across the industry were BOD_5, TSS, COD and pH.

These pollutant parameters were identified in 100 percent of the plant effluents for which data were obtained. Pollutant levels in treatment influent and untreated effluent streams are frequently high, particularly in Subcategories A and C (fermentation and synthesis, respectively).

Other conventional parameters subject to regulation under the Administrator's discretion are oil and grease, and fecal coliform. Although they do appear as problems in some plant process wastewater, oil and grease are neither sufficiently widespread nor severe enough to justify regulation on an industry wide basis. Fecal coliform is not of significance in the industrial wastewater effluents of this industry. Similarly, the nonconventional parameters of color, phosphorus and various forms of nitrogen are not judged to present a frequent enough problem to justify regulation on a national basis. TOC is considered to be so closely related to BOD and COD that separate attention is not necessary.

1. Biochemical Oxygen Demand

BOD is the quantity of oxygen required for the biological and chemical oxidation of waterborne substances under ambient or test conditions. Substances that may contribute to the BOD include carbonaceous organic materials usable as a food source by aerobic organisms; oxidizable nitrogen derived from nitrites, ammonia, and organic nitrogen compounds that serve as food for specific bacteria; and such chemically oxidizable materials as ferrous iron, sulfides, sulfite, and similar reduced-state inorganics

that will react with dissolved oxygen or that are metabolized by bacteria.

The BOD of a waste adversely affects the dissolved oxygen resources of a body of water by reducing the oxygen available to fish, plant life, and other aquatic species. Total exhaustion of the dissolved oxygen in water results in anaerobic conditions and the production of such undesirable gases as hydrogen sulfide and methane. The reduction of dissolved oxygen can be detrimental to fish populations, fish growth rate, and organisms used as fish food. A total lack of oxygen due to excessive BOD can result in the death of all aerobic aquatic inhabitants in the affected area.

Water with a high BOD indicates the presence of decomposing organic matter and associated increased bacterial concentrations that may degrade water quality and minimize potential uses of the water. This organic material promoting a high BOD can also increase algal concentrations and cause blooms.

2. Total Suspended Solids

Suspended solids in wastewater are normally measured as total suspended solids. They can include both organic and inorganic materials. The inorganic materials may include sand, silt, clay, and, possibly, toxic metal compounds. The organic fraction may include such materials as grease, oils, animal and vegetable waste products, fibers, microorganisms (algae, for example), and many other dispersed insoluble organic compounds. These solids may settle rapidly and form bottom deposits that are often a mixture of both organic and inorganic solids.

Solids may be suspended in water for a time and then settle to the bed of the stream or lake. They may be inert; they may be slowly biodegradable materials; or they may be rapidly decomposable substances. While in suspension, they increase the turbidity of the water, reduce light penetration, and thereby impair the photosynthetic activity of aquatic plants. After settling to the stream or lake bed, the solids can form sludge banks which, if largely organic, create localized dead areas in the water body and result in anaerobic and undesirable benthic conditions. Aside from any toxic effect attributable to substances leached out by water, suspended solids may kill fish and shellfish by causing abrasive injuries, by clogging gills and respiratory passages, by screening light, and by promoting and maintaining the development of noxious conditions through oxygen depletion. Suspended solids also reduce the recreational value of the water.

3. Chemical Oxygen Demand

COD is a chemical oxidation test devised as an alternate method of estimating the total oxygen demand of a wastewater. Since the

method relies on the oxidation-reduction system of chemical analyses rather than on biological factors, it is more precise, accurate, and rapid than the BOD5 test. The COD test is widely used to estimate the total oxygen demand (ultimate rather than 5-day BOD) required to oxidize the compounds in a wastewater. It is based on the fact that, with the assistance of certain inorganic catalysts, strong chemical oxidizing agents under acid conditions can oxidize most organic compounds.

The COD test measures organic matter that exerts an oxygen demand and that may affect public health. It is a useful analytical tool for pollution control activities. Most pollutants measured by the BOD5 test can be measured by the COD test. In addition, pollutants more resistant to biochemical oxidation can also be measured as COD. COD is a more inclusive measure of oxygen demand than BOD5 and results in higher oxygen demand values than BOD5.

The COD of a wastewater normally exceeds BOD5 since it is usually constituted of those materials contributing to the BOD level plus those more resistant to biochemical oxidation. Joint consideration of COD and BOD measurements can indicate the relative biodegradability of the pollutants and the levels of the chemical pollutants not easily bio-oxydized. The correlation between the COD and BOD concentrations in a specific plant waste resulting from a particular operation is applicable only to that waste. Furthermore, the level of organic pollutants as indicated by COD do not correlate with the level of individual priority pollutants.

Compounds more resistant to biochemical oxidation are of great concern because of their slow, continuous oxygen demand on the receiving water and also because of their potentially harmful effects on the health of humans and aquatic life. Many of these compounds result from industrial discharges; some of the compounds have been found to have carcinogenic, mutagenic, and similar adverse effects. Concern about these compounds has increased as a result of demonstrations that their long life in receiving waters (the result of a low biochemical oxidation rate) allows them to contaminate downstream water intakes. The commonly used systems of water purification are not effective in removing these types of materials and such disinfection as chlorination may convert them into even more hazardous materials.

C. PRIORITY POLLUTANTS

The frequency and level of priority pollutant occurrence in the wastewaters of the industry were considered in order to determine the manner in which these pollutants might be regulated. The diversity of process and materials employed by the industry brings about a broad presence, with virtually every toxic pollutant compound listed in the modified comprehensive Settlement Agreement present in the effluent of at least one

plant. However, none are present in the effluent in all or even a predominant part of the industry.

Under the provisions of Paragraph 8 of the Settlement Agreement in Natural Resources Defense Council, Inc. v. Train, 8 ERC 2120 (D.D.C. 1976), modified, 12 ERC 1833 (D.D.C. 1979) modified by Orders dated October 26, 1982, and August 2, 1983, guidance is provided to the Agency on exclusion of specific priority pollutants, subcategories, or categories from regulations under the effluent limitations guidelines, standards of performance and pretreatment standards. (1)(2) This paragraph is excerpted below:

> "8(a) The Administrator may exclude from regulation under the effluent limitations and guidelines, standards of performance, and/or pretreatment standards contemplated by this Agreement a specific pollutant or category or subcategory of point sources for any of the following reasons, based upon information available to him:
>
> (i) For a specific pollutant or a subcategory or category, equally or more stringent protection is already provided by an effluent, new source performance, or pretreatment standard or by an effluent limitation and guideline promulgated pursuant to Section(s) 301, 304, 306, 307(a), 307(b) or 307(c) of the Act;
>
> (ii) For a specific pollutant, except for pretreatment standards, the specific pollutant is present in the effluent discharge solely as a result of its presence in intake waters taken from the same body of water into which it is discharged and, for pretreatment standards, the specific pollutant is present in the effluent which is introduced into treatment works (as defined in Section 212 of the Act) which are publicly owned solely as a result of its presence in the point source's intake waters, provided however, that such point source may be subject to an appropriate effluent limitation for such pollutant pursuant to the requirements of Section 307;
>
> (iii) For a specific pollutant, the pollutant is not detectable (with the use of analytical methods approved pursuant to 304(h) of the Act, or in instances where approved methods do not exist, with the use of analytical methods which represent state-of-the-art capability) in the direct discharges or in the effluents which are introduced into publicly-owned treatment works from sources within the subcategory or category; or is detectable in the effluent from only a small number of sources within the subcategory and the pollutant is uniquely related to only those sources; or the pollutant is present only in trace amounts and is neither causing nor likely to cause toxic effects; or is present in amounts too small to be effectively reduced by technologies known to the Administrator; or the pollutant

will be effectively controlled by the technologies upon which are based other effluent limitations and guidelines, standards of performance, or pretreatment standards; or

(iv) For a category or subcategory, the amount and the toxicity of each pollutant in the discharge does not justify developing national regulations in accordance with the schedule contained in Paragraph 7(b).

(b) The Administrator may exclude from regulation under the pretreatment standards contemplated by this Agreement all point sources within a point source category or point source subcategory:

(i) If 95 percent or more of all point sources in the point source category or subcategory introduce into treatment works (as defined in Section 212 of the Act) which are publicly owned only pollutants which are susceptible to treatment by such treatment works and which do not interfere with, do not pass through, or are not otherwise incompatible with such treatment works; or

(ii) If the toxicity and amount of the incompatible pollutants (taken together) introduced by such point sources into treatment works (as defined in Section 212 of the Act) that are publicly owned is so insignificant as not to justify developing a pretreatment regulation..."

a. Pollutants Excluded from Direct Discharger Regulations

Table V-7 lists the occurrence, frequencies and levels of priority pollutants found in samples collected in the screening survey. The priority pollutant data provided in the 308 data base was used to help develop the group of plants which were then screened for priority pollutants. However, these data were not used to support Paragraph 8 exclusion of priority pollutants found in the S/V study because many of the 308 priority pollutant responses were incomplete or of a non-quantitative nature. This was due in part to the fact that many plants had not performed a priority pollutant scan of their wastewater. The 308 priority pollutant data were used to exclude those which were uniquely related to individual sources or occur as the result of non-pharmaceutical operations.

Compounds numbered 17B, 49V, and 50V have been deleted by 46 FR 10723 on February 4, 1981 and 46 FR 2266 on January 8, 1981. The remaining list of priority pollutants was considered under the individual subparagraphs of Paragraph 8. The compounds that can be excluded under each provision are tabulated in Tables VI-1 through VI-4, with those which can be excluded by more than one provision being noted by an asterisk (*).

TABLE VI-1

PRIORITY POLLUTANTS EXCLUDED FROM DIRECT DISCHARGER REGULATIONS
BASED ON
CONTROL BY OTHER LIMITATION TECHNOLOGIES

Paragraph 8 (a) (i) "For a specific pollutant effectively controlled by the technology upon which are based upon other effluent limitations guidelines, standards of performance, or pretreatment standards . . ."

4V	benzene	(Air stripping and/or biodegradation)
23V	chloroform	(Air stripping)
11V*	1,1,1-trichloroethane	(Air stripping)
13V*	1,2-dichloroethane	(Air stripping)
38V	ethylbenzene	(Air stripping and/or biodegradation)
45V	methyl chloride	(Air stripping)
85V	tetrachloroethylene	(Air stripping)
86V	toluene	(Air stripping and/or biodegradation)
87V*	trichloroethylene	(Air stripping)
58A*	4-nitrophenol	(Biodegradation)
59A*	2,4-dinitrophenol	(Biodegradation)
65A	phenol	(Biodegradation)
25B*	1,2-dichlorobenzene	(Biodegradation)

* Indicates exclusion under two or more separate provisions of Paragraph 8.

V - Volatile organics
A - Acid extractables
B - Base/neutral extractables
P - Pesticides
M - Metals

TABLE VI- 2

PRIORITY POLLUTANTS EXCLUDED FROM DIRECT DISCHARGER REGULATIONS BASED ON LOW-LEVEL PRESENCE

Paragraph 8 (a) (iii) "For a specific pollutant...present only in trace amounts and is neither causing nor likely to cause toxic affects; or is present in amounts too small to be effectively reduced by technologies known to the Administrator..."

6V*	carbon tetrachloride
7V	chlorobenzene
11V*	1,1,1-trichloroethane
13V*	1,1-dichloroethane
14V*	1,1,2-trichloroethane
15V*	1,1,2,2-tetrachloroethane
16V*	chloroethane
19V*	2-chloroethylvinyl ether
30V*	1,2-trans-dichloroethylene
32V*	1,2-dichloropropane
33V*	1,3-dichloropropylene
38V*	ethylbenzene
46V*	methyl bromide
47V*	bromoform
48V*	dichlorobromomethane
51V*	chlorodibromomethane
85V*	tetrachloroethylene
87V*	trichloroethylene
88V*	vinyl chloride
21A*	2,4,6-trichlorophenol
22A*	parachlorometa cresol
24A*	2-chlorophenol
31A*	2,4-dichlorophenol
34A*	2,4-dimethylphenol
37A*	1,2-diphenylhydrazine
57A*	2-nitrophenol
58A	4-nitrophenol
59A*	2,4-dinitrophenol
64A*	pentachlorophenol
65A	phenol
1B*	acenaphthene
5B*	benzidine
8B*	1,2,4-trichlorobenzene
9B*	hexachlorobenzene
12B*	hexachloroethane
18B*	bis(2-chloroethyl) ether
20B*	2-chloronaphthalene
25B*	1,2-dichlorobenzene
26B*	1,3-dichlorobenzene
27B*	1,4-dichlorobenzene
28B*	3,3-dichlorobenzidine
35B*	2,4-dinitrotoluene
36B*	2,6-dinitrotoluene
39B*	fluoranthene
40B*	4-chlorophenyl phenyl ether
41B*	4-bromophenyl phenyl ether
43B*	bis(2-chloroethoxy) methane
52B*	hexachlorobutadiene
53B*	hexachlorocyclopentadiene
54B*	isophorone
55B*	naphthalene
56B*	nitrobenzene
61B*	N-nitrosodimethylamine
62B*	N-nitrosodiphenylamine
63B*	N-nitrosodi-n-propylamine
66B**	bis(2-ethylhexyl) phthalate
67B**	butyl benzyl phthalate
68B**	di-n-butyl phthalate
69B**	di-n-octyl phthalate
70B**	diethyl phthalate
71B**	dimethyl phthalate
72B*	benzo(a)anthracene
73B*	benzo(a)pyrene
74B*	3,4-benzofluoranthene
75B*	benzo(k)fluoranthane
76B*	chrysene
77B*	acenaphthylene
78B*	anthracene
79B*	benzo(ghi)perylene
80B*	fluorene
81B*	phenanthrene
82B*	dibenzo(a,h)anthracene
83B*	indeno(1,2,3-C,D)pyrene
84B*	pyrene
129B*	2,3,7,8-tetrachloro-dibenzo-p-dioxin (TCDD)
114M	antimony (Total)
115M	arsenic (Total)

TABLE VI-2 (CONT'D.)

PRIORITY POLLUTANTS EXCLUDED FROM DIRECT DISCHARGER REGULATIONS BASED ON LOW-LEVEL PRESENCE

117M*	beryllium (Total)
118M*	cadmium (Total)
119M	chromium (Total)
120M	copper (Total)
122M	lead (Total)
123M	mercury (Total)
124M	nickel (Total)
125M*	selenium (Total)
126M*	silver (Total)
127M	thallium (Total)

* Indicates exclusion under two or more separate provisions of Paragraph 8.

** Phthalates likely resulting from sample contamination.

V - Volatile organics

A - Acid extractables

B - Base neutral extractables

P - Pesticides

M - Metals

TABLE VI-3

PRIORITY POLLUTANTS EXCLUDED FROM DIRECT DISCHARGER REGULATIONS BASED ON INFREQUENT OCCURRENCE

Paragraph 8 (a) (iii) "For a specific pollutant...detectable in the effluent from only a small number of sources within the subcategory and the pollutant is uniquely related to only those sources..."

2V	acrolein
3V	acrylonitrile
6V*	carbon tetrachloride (tetrachloromethane)
7V*	chlorobenzene
10V*	1,2-dichloroethane
13V*	1,1-dichloroethane
14V*	1,1,2-trichloroethane
15V*	1,1,2,2-tetrachloroethane
16V*	chloroethane
19V*	2-chloroethyl vinyl (mixed)
29V	1,1-dichloroethylene
30V*	1,2-trans-dichloroethylene
32V*	1,2-dichloropropane
33V*	1,3-dichloropropylene (1,3-dichloropropene)
38V*	ethylbenzene
45V	methyl chloride (chloromethane)
46V*	methyl bromide (bromomethane)
47V*	bromoform (tribromomethane)
48V*	dichlorobromomethane
51V*	chlorodibromomethane
85V*	tetrachloroethylene
87V*	trichloroethylene
88V*	vinyl chloride (chloroethylene)
21A*	2,4,6-trichlorophenol
22A*	parachlorometa cresol
24A*	2-chlorophenol
31A*	2,4-dichlorophenol
34A*	2,4-dimethylphenol
37A*	1,2-diphenylhydrazine
58A*	4-nitrophenol
59A*	2,4-dinitrophenol
60A	4,6-dinitro-o-cresol
64A*	pentachlorophenol
1B*	acenaphthene
5B*	benzidine
8B*	1,2,4-trichlorobenzene
9B*	hexachlorobenzene
12B*	hexachloroethane
18B*	bis(2-chloroethyl) ether
20B*	2-chloronaphthalene
25B*	1,2-dichlorobenzene
26B*	1,3-dichlorobenzene
27B*	1,4-dichlorobenzene
28B*	3,3-dichlorobenzidine
35B*	2,4-dinitrotoluene
36B*	2,6-dinitrotoluene
39B*	fluoranthene
40B*	4-chlorophenyl phenyl ether
41B*	4-bromophenyl phenyl ether
42B	bis(2-chloroisopropyl) ether
43B*	bis(2-chloroethoxy) methane
52B*	hexachlorobutadiene
53B*	hexachlorocyclopentadiene
54B*	isophorone
55B*	naphthalene
56B*	nitrobenzene
61B*	N-nitrosodimethylamine
62B*	N-nitrosodiphenylamine
63B*	N-nitrosodi-n-propylamine
72B*	benzo(a)anthracene
73B*	benzo(a)pyrene
74B*	3,4-benzofluoranthene
75B*	benzo(k)fluoranthene
76B*	chrysene
77B*	acenaphthylene
78B*	anthracene
79B*	anthracene
80B*	fluorene
81B*	phenanthrene

TABLE VI-3 (CONT'D.)

PRIORITY POLLUTANTS EXCLUDED FROM DIRECT DISCHARGER REGULATIONS BASED ON INFREQUENT OCCURRENCE

82B*	dibenzo(a,h) anthracene
83B*	indeno(1,2,3-C,D)pyrene
84B*	pyrene
129B*	2,3,7,8-tetrachloro-dibenzo-p-dioxin(TCDD)
89P**	aldrin
90P**	dieldrin
91P**	chlordane
92P**	4,4'-DDT
93P**	4,4'-DDE
94P**	4,4'-DDD
95P**	alpha-endosulfan
96P**	beta-endosulfan
97P**	endosulfan sulfate
98P**	endrin
99P**	endrin aldehyde
100P**	heptachlor
101P**	heptachlor epoxide
102P**	alpha-BHC
103P**	beta-bhc
104P**	gamma-BHC (lindane)
105P**	delta-BHC
106P**	PCB-1242
107P**	PCB-1254
108P**	PCB-1221
109P**	PCB-1232
110P**	PCB-1248
111P**	PCB-1260
112P**	PCB-1016
113P**	toxaphene
117M*	beryllium (Total)
118M*	cadmium (Total)
125M*	selenium (Total)
126M*	silver (Total)

* Indicates exclusion under two or more separate provisions of Paragraph 8.

** Infrequent presence due to operations on site other than pharmaceutical.

V - Volatile organics

A - Acid extractables

B - Base neutral extractables

P - Pesticides

M - Metals

TABLE VI-4

PRIORITY POLLUTANTS EXCLUDED FROM DIRECT DISCHARGER REGULATIONS
BASED ON
PRESENCE IN AMOUNTS TOO SMALL TO BE EFFECTIVELY REDUCED
BY TECHNOLOGIES KNOWN TO THE ADMINISTRATOR

66B	Bis(2-ethylhexyl) phthalate
68B	Di-n-butylphthalate
70B	Diethylphthalate
114M	Antimony
115M	Arsenic
118M	Cadmium
119M	Chromium
120M	Copper
122M	Lead
123M	Mercury
124M	Nickel
125M	Selenium
126M	Silver
127M	Thallium
128M	Zinc

B = Base neutral extractable

M = Metal

Table VI-1 lists compounds whose incidental removal is likely to be brought about by technologies instituted to meet other limitations and indicates the incidental mechanism(s) responsible for removal. A significant example is phenol whose biodegradability makes it likely that substantial removal will be accomplished by activated sludge, aerated lagoons, or other biological treatment systems targeted for BOD removal. Air strippable volatiles are also likely to be removed through aeration and exposure to the atmosphere.

Table VI-2 lists pollutants present at levels insufficient to justify regulation. Some are present at no more than trace amounts (at or below the detection limits) and others at levels below or essentially the same as removal capabilities of applicable technologies. Those compounds with sufficient volatility and low solubility to be effectively steam stripped can be removed to no better than about 50 micrograms per liter (μg/l). (72) Earlier consideration by the Agency (98) of the treatability of a number of the more significant priority pollutants indicates the following typical treatability criteria, expressed on a 5-day maximum basis:

		μg/l
8B	1,2,4-Trichlorobenzene	50-100
11V	1,1,1-Trichloroethane	500-600
13V	1,1-Dichloroethane	500-600
23V	Chloroform	500-600
25B	1,2-Dichlorobenzene	400-500
26B	1,3-Dichlorobenzene	400-500
27B	1,4-Dichlorobenzene	400-500
44V	Methylene Chloride	500
55B	Naphthalene	400-500
86V	Toluene	400
4V	Benzene	400
69B	Di-n-Octyl Phthalate	100

Metal treatability levels are indicated in Table VI-5. The priority pollutants in Table VI-2 were excluded based on a comparison of the aforementioned treatability levels with the screening and verification effluent data in Appendix G of the Proposed Development Document.

Also included in Table VI-2 are a number of phthalates whose presence is likely the result of sample contamination by sampling equipment.

Table VI-3 considers the frequency of occurrence in the Screening/Verification plant data. Those occurring infrequently, even though at significant levels, are excluded where a review of process wastewater from all of the Screening/Verification plants indicates that such occurrence is mainly related to those limited sources. Some priority pollutants analyzed in the effluent wastewater of one or more Screening/Verification plants are

TABLE VI-5

ESTIMATED ACHIEVABLE LONG-TERM AVERAGE EFFLUENT CONCENTRATIONS FOR THE PRIORITY POLLUTANT METALS

Final Concentration (μg/l)*

Metal	Lime Settling	Lime Filter	Sulfide Filter	References
Antimony	800-1500	400-800	-	116
Arsenic	500-1000	500-1000	50-100	118, 120, 121
Beryllium	100-500	10-100	-	116
Cadmium	100-500	50-100	10-100	117, 118, 123, 124, 125
Copper	500-1000	400-700	50-500	117, 118, 119, 121, 123, 124, 125
Chromium III	100-500	50-500	-	113, 115, 118, 119, 120, 121, 126
Lead	300-1600	50-600	50-400	118, 120, 121, 122, 124
Mercury	-	-	10-50	120, 121, 128
Nickel	200-1500	100-500	50-500	118, 123, 124
Silver	400-800	100-400	50-200	120, 121, 126
Selenium	200-1000	100-500	-	116
Thallium	200-1000	100-500	-	116
Zinc	500-1500	400-1200	20-1200	114, 118, 123, 124

*Estimated achievable levels reported in the Inorganic Chemicals Manufacturing Development Document (Ref. 127) based on additional references cited.

clearly not the result of pharmaceutical operations. For example, one plant is known to also produce pesticides and consequently exhibits pesticides in the mixed wastewater.

Table VI-4 lists those pollutants which are present in amounts too small to be effectively reduced by the technologies known to the Administrator. At proposal, methylene chloride was included in this list. With the exception of methylene chloride, there has been no change in our rationale for not establishing effluent limitations guidelines and standards for the TVOs. In the case of methylene chloride, at proposal EPA stated that discharges were controlled by effluent limitations reflecting the best practicable control technology currently available. After proposal, EPA received no comments on the proposed exclusion of this toxic pollutant. However, a reexamination of the existing information on the use and discharge of methylene chloride by direct discharging pharmaceutical plants indicates that, in fact, treatable levels of methylene chloride may remain even after the implementation of BPT (i.e., biological treatment).

Available data show that in cases where the concentrations of methylene chloride discharged to biological treatment systems are greater than 5 mg/l, treatable concentrations of methylene chloride remain in the effluent. Methylene chloride is used in about 15 percent of all fermentation, chemical synthesis, and extraction processes and to a lesser extent in formulation operations. EPA's data show that 15 of the 51 direct discharging pharmaceutical plants use methylene chloride in their manufacturing processes. For these reasons, EPA reconsidered its original Paragraph 8 determination.

The Agency considered establishing more stringent BAT effluent limitations guidelines for methylene chloride based on in-plant steam stripping technology in addition to biological treatment. This treatment technology would insure that only low effluent concentrations of methylene chloride would be discharged. However, EPA found that the costs of installing and operating steam strippers to control methylene chloride are not insignificant. The Agency estimates that nine direct discharging plants would incur average capital and average total annual costs of $0.736 million and $0.712 million (1982 dollars), respectively, per plant. EPA estimates that the installation of steam stripping technology would reduce current discharge levels of methylene chloride by 60,700 pounds per year at these plants. This compares to the 651,000 pounds per year of methylene chloride that are now removed by biological treatment, the best practicable control technology currently available for this industry. EPA also determined that steam stripping technology is extremely energy intensive and would increase energy use at these nine direct dischargers by the equivalent of 94,300 barrels of oil per year. The Agency projects that the average methylene chloride removal cost resulting from the application of steam

stripping technology would be $103 per pound, when the full value of the recovered solvent is assumed.

After considering the relative toxicity of this pollutant in light of these costs, and all the other factors, EPA decided not to issue categorical regulations limiting methylene chloride discharges from the pharmaceutical industry based on the addition of treatment technology beyond biological treatment. The Agency has also decided not to establish limitations based on biological treatment because they would not effect a further removal of methylene chloride. Another factor, while not directly a basis for these decisions, confirmed the reasonableness of the weight EPA accorded to cost and energy factors. The Agency determined that much of the methylene chloride which would be removed by steam stripping will otherwise volatilize during biological treatment. Our data indicate that the volatilized methylene chloride will not be at levels which create a health risk.

Data on the capabilities of steam stripping and biological treatment technologies to reduce the discharge of methylene chloride and on the cost of installing and operating steam strippers to control toxic volatile organics is presented in Section VII and Appendix A. This information may be used by permit writers in developing permit limitations for methylene chloride on a case-by-case basis where necessary.

The one priority pollutant detected at sufficient levels and frequency to warrant control by all direct dischargers is cyanide.

b. Pollutants Excluded from Regulation under Pretreatment Standards

Paragraph 8(b) (ii) of the Settlement Agreement allows for the exclusion of those pollutants whose toxicity and amounts (taken together) are so insignificant as not justify regulation under pretreatment standards. These pollutants which were found in the wastewater of 11 indirect discharger screening plants are listed in Table VI-6 and include toxic metals, phenols, methyl chloride and various phthalates. (The presence of the last group of pollutants cannot be attributed with certainty to pharmaceutical manufacturing operations.) These pollutants were found infrequently and at low concentrations and, therefore, are not required to be controlled by pretreatment standards. Eighteen other pollutants (cyanide and 17 toxic solvents) which are listed in Table VI-7 were considered for control by pretreatment standards. The remaining toxic pollutants were not detected in the wastewater of indirect discharging pharmaceutical plants.

After examining all of the available data, EPA has concluded that, with the exception of cyanide, methylene chloride and chloroform, these pollutants should be excluded from regulation

TABLE VI-6

POLLUTANTS EXCLUDED FROM PRETREATMENT STANDARDS

No.	Compound	No. of Occurrences in Indirect Wastewaters	Max. Indirect Wastewater Concentration	Basis For Exclusion
14V	1,1,2-trichloroethane	0		Infrequent
15V	1,1,2,2-tetrachloroethane	0		"
16V	chloroethane	0		"
19V	2-chloroethylvinyl ether	0		"
32V	1,2-dichloropropane	0		"
33V	1,3-dichloropropylene	0		"
48V	dichlorobromomethane	0		"
51V	chlorodibromomethane	0		"
88V	vinyl chloride	0		"
1B	acenaphthene	0		"
5B	benzidine	0		"
8B	1,2,4-trichlorobenzene	0		"
9B	hexachlorobenzene	0		"
12B	hexachloroethane	0		"
18B	bis(2-chloroethyl) ether	0		"
20B	2-chloronaphthalene	0		"
25B	1,2-dichlorobenzene	1	12	" & low level
26B	1,3-dichlorobenzene	0		"
27B	1,4-dichlorobenzene	0		"
28B	3,3'-dichlorobenzidine	0		"
35B	2,4-dinitrotoluene	0		"
36B	2,6-dinitrotoluene	0		"
37B	1,2-diphenylhydrazine	0		"
39B	fluoranthene	0		"
40B	4-chlorophenyl phenyl ether	0		"
41B	4-bromophenyl phenyl ether	0		"
42B	bis(2-chloroisopropyl) ether	0		"
43B	bis(2-chloroethoxy) methane	0		"
52B	hexachlorobutadiene	0		"
53B	hexachlorocyclopentadiene	0		"
54B	isophorone	0		"
55B	naphthalene	0		"
56B	nitrobenzene	0		"
61B	N-nitrosodimethylamine	0		"
62B	N-nitrosodiphenylamine	1	12	" & low level
63B	N-nitrosodi-n-propylamine	0		"
66B	bis(2-ethylhexyl) phthalate	5*	2700*	"
67B	butyl benzyl phthalate	0		"
68B	di-n-butyl phthalate	0		"

* Phthalate occurrence likely the result of sample contamination by sample tubing.

TABLE VI-6 (Continued)

No.	Compound	No. of Occurrences in Indirect Wastewaters	Max. Indirect Wastewater Concentration	Basis For Exclusion
69B	di-n-octyl phthalate	0		Infrequent
70B	diethyl phthalate	0		"
71B	dimethyl phthalate	0		"
73B	benzo(a) pyrene	0		"
74B	3,4-benzofluoranthene	0		"
75B	benzo(k) fluoranthane	0		"
76B	chrysene	0		"
77B	acenaphthylene	0		"
78B	anthracene	0		"
79B	benzo(ghi) perylene	0		"
80B	fluorene	0		"
81B	phenanthrene	0		"
82B	dibenzo(a,h) anthracene	0		"
83B	indeno(1,2,3-C,D) pyrene	0		"
84B	pyrene	0		"
129B	2,3,7,8-tetrachloro-dibenzo-p-dioxin (TCDD)	0		"
89P	aldrin	0		"
90P	dieldrin	0		"
91P	chlordane	0		"
92P	4,4'-DDT	0		"
93P	4,4'-DDE	0		"
94P	4,4'-DDD	0		"
95P	alpha-endosulfan	0		"
96P	beta-endosulfan	0		"
97P	endosulfan sulfate	0		"
98P	endrin	0		"
99P	endrin aldehyde	0		"
100P	heptachlor	0		"
101P	heptachlor epoxide	0		"
102P	alpha-BHC	0		"
103P	beta-BHC	0		"
104P	gamma-BHC (lindane)	0		"
105P	delta-BHC	0		"
106P	PCB-1242	0		"
107P	PCB-1254	0		"
108P	PCB-1221	0		"
109P	PCB-1232	0		"
110P	PCB-1248	0		"
111P	PCB-1260	0		"
112P	PCB-1016	0		"
113P	toxaphene	0		"
114M	antimony (total)	7	210	treatable level
115M	arsenic (total)	3	43	" " "
117M	beryllium (total	2	2	" " "
118M	cadmium (total)	3	32	" " "
119M	chromium (total)	11	650	" " "

TABLE VI-6 (Continued)

No.	Compound	No. of Occurrences in Indirect Wastewaters	Max. Indirect Wastewater Concentration	Basis For Exclusion
120M	copper (total)	11	150	treatable level
122M	lead (total)	8	286	" " "
123M	mercury (total)	7	50	" " "
124M	nickel (total)	8	630	" " "
125M	selenium (total)	3	30	" " "
126M	silver (total)	4	24	" " "
127M	thallium (total)	2	43	" " "
128M	zinc (total)	10	522	
116		--		

TABLE VI-7

POLLUTANTS CONSIDERED FOR PRETREATMENT STANDARDS

No.	Compound	No. of Occurrences in Wastewaters	Max. Wastewater Concentration Level (ug/L)
121	cyanide	5	590
	Volatile Organics:		
2V	acrolein	2	100
3V	acrylonitrile	1	100
4V	benzene	6	580
6V	carbon tetrachloride	1	300
7V	chlorobenzene	2	11
10V	1,2-dichloroethane	2	290
11V	1,1,1-trichloroethane	4	360,000
13V	1,1-dichloroethane	3	27
23V	chloroform	6	1,350
29V	1,1-dichloroethylene	2	10
30V	1,2-trans-dichloroethylene	1	550
38V	ethylbenzene	3	21
44V	methylene chloride	9	890,000
47V	bromoform	1	12
85V	tetrachloroethylene	1	2
86V	toluene	6	1,050
87V	trichloroethylene	1	7

by the provisions of Paragraph 8 of the Settlement Agreement. Thirteen of these pollutants have been excluded because their amount and toxicity, taken together, are so insignificant as not to justify developing uniformly applicable pretreatment regulations. Of the remaining, there are two (benzene and toluene) which, while not as insignificant, nonetheless are unlikely to pass through POTWs.

In the case of benzene and toluene, the data indicate that direct discharger median percent reductions exceed POTW median percent reductions by less than 5 percent (100 percent for direct dischargers versus 99 percent for benzene and 97 percent for toluene at POTWs). In light of the fact that EPA had less data in the POTW studies on benzene and toluene than it had for some other pollutants and in light of the variability in analyzing samples for organic priority pollutants at the concentrations typically found in end-of-pipe biological systems at POTWs and pharmaceutical plants, EPA believes that differences of 5 percent or less between the direct discharger and POTW data for benzene and toluene are unlikely to reflect real differences in treatment efficiency. Therefore, EPA has determined that benzene and toluene do not pass through POTWs.

However, a potential interference problem could exist for these two toxic volatile organics because of a potential fire/explosion hazard. Benzene and toluene water mixtures have low flash points. Relatively small concentrations of these solvents in water mixtures (about 180 mg/l) can cause spontaneous combustion in the vapor space above the water mixture under certain conditions. EPA's latest information indicates that fire/explosions, while not impossible, are unlikely. Benzene and toluene levels above the minimum concentrations required to cause combustion have not been reported in discharges from plants in the pharmaceutical industry. Because pass through does not occur and interference is unlikely, there is no basis for establishing nationally applicable categorical pretreatment standards for benzene or toluene. However, under the general pretreatment regulation, 40 CFR §403.5, an individual POTW may establish pretreatment standards if benzene and toluene discharges from pharmaceutical users result in interference. Section VII of this document contains suggested pretreatment standards for benzene and toluene, based on steam stripping, for consideration by POTWs establishing standards under §403.5.

At direct discharging pharmaceutical manufacturing plants, chloroform is reduced to levels that are below its treatability through volatilization in biological treatment systems. Therefore, we have excluded chloroform from BAT regulations under the provisions of paragraph 8(a)(iii) of the Settlement Agreement. As for indirect dischargers, the Agency has found that POTWs to which high concentrations of chloroform are discharged achieve high chloroform removal (greater than 95 percent). Therefore, POTWs receiving high concentrations of

chloroform as a result of pharmaceutical discharges are unlikely to experience pass through. For the above reasons, EPA has decided not to establish pretreatment standards controlling chloroform from indirect discharging pharmaceutical plants.

Through this process, the Agency determined that only methylene chloride was a candidate for national PSES and PSNS regulations. To address the issue of pass through, EPA studied 50 well-operated POTWs that use biological treatment to determine the extent to which priority pollutants, including methylene chloride, are reduced by such POTWs.(136) The Agency also conducted a sampling episode in response to comments on the proposed regulation in order to determine whether pass through of toxic volatile organics is occurring at POTWs as the result of discharges from pharmaceutical plants. During this sampling episode, the influent and effluent of a well operated POTW having secondary treatment in-place as well as the effluent from a pharmaceutical plant were sampled to determine the levels of toxic volatile organics present. The results of the sampling episode indicate that there is pass through of methylene chloride at the sampled POTW and that this pass through is principally the result of discharges of methylene chloride from a pharmaceutical manufacturing facility. A more complete discussion of the sampling episode and the results may be found in the contractor's report entitled "Pretreatment Standards Evaluation for the Pharmaceutical Manufacturing Category - Data Evaluation Report", August, 1983.(137)

EPA found, however, that the installation and operation of steam strippers to reduce methylene chloride discharges to POTWs by pharmaceutical plants would result in costs that are not insignificant. EPA estimates that 25 indirect discharging plants would incur capital and total annual costs of $0.748 million and $0.768 million (1982 dollars), respectively, per plant. The Agency projects that one indirect discharging pharmaceutical plant would close if required to install steam stripping technology. Steam strippers are also equally energy intensive at indirect discharging plants as at direct dischargers. EPA estimates that the operation of steam strippers at the 25 plants would increase energy usage by the equivalent of 315,000 barrels of oil per year. For these reasons and because EPA concluded that regulation of methylene chloride at direct dischargers is inappropriate, the Agency has decided not to establish categorical PSES and PSNS for methylene chloride.

Data on the capabilities of steam stripping technology to reduce the discharge of methylene chloride and on the cost of installing and operating steam strippers to control toxic volatile organics is presented in Section VII and Appendix A. This information may be used by municipalities in developing pretreatment standards for methylene chloride on a case-by-case basis where necessary.

SECTION VII

CONTROL AND TREATMENT TECHNOLOGY

A. INTRODUCTION

This section addresses the technologies currently used or available to remove or reduce wastewater pollutants generated by the pharmaceutical manufacturing industry. Although wastewater flow and raw waste load vary from plant to plant, pharmaceutical wastewaters are treatable by the technologies discussed below. Many possible combinations of in-plant source controls and technologies and end-of-pipe treatment systems are capable of reducing pollutant discharges. However, each individual plant must make the final decision concerning the specific combination of pollution control measures best suited to its particular situation.

In identifying appropriate control and treatment technologies, the Agency assumed that each manufacturing plant had already installed or would install the equipment necessary to comply with the 1976 BPT limitations. The treatment technologies currently in-place at plants in the pharmaceutical industry, as reported in 308 responses, are listed in Appendix L of the Proposed Development Document. Thus, the technologies described below are those which can further reduce the discharge of pollutants into navigable waters or POTWs. They are divided into two broad classes: in-plant and end-of-pipe technologies.

Since the ultimate receiving point of a plant's wastewater (e.g., POTW vs. river) can be critical in determining the overall treatment effort required, information on ultimate discharge is also presented in this section.

B. IN-PLANT SOURCE CONTROL

The intent of in-plant source control is to reduce or eliminate the hydraulic and/or pollutant loads generated by specific sources within the overall manufacturing process. By implementing controls at the source, the impact on and requirements of subsequent downstream treatment systems can be minimized.

Many of the newer pharmaceutical manufacturing plants are designed with the reduction of water use and subsequent minimization of contamination as part of the overall planning and plant design criteria. Improvements also have been made in existing plants to provide better control of their manufacturing

processes and other activities and the resultant environmental effects. Some examples of in-plant source controls that have been effective in reducing pollution loads are as follows:

(1) Production processes have been modified or combined and reaction mixtures have been concentrated to reduce waste loads as well as to increase yields. Processes have also been reviewed and revised to reduce the number of toxic substances used.

(2) Efforts have been made to concentrate and segregate wastes at their source to minimize or eliminate wastes where possible. New process equipment has been designed to produce effluents requiring no further treatment.

(3) Several techniques have been employed to reduce the volume of fermentation wastes discharged to end-of-pipe treatment systems. One approach involves concentrating "spent beer" wastes by evaporation and then dewatering and drying waste mycelia. The resulting dry product in some instances has sufficient economic value as an animal feed supplement to offset part of the drying cost.

(4) Several plants have installed automatic TOC-monitoring instrumentation or both pH and TOC monitoring to permit early detection of process upsets that may result in excessive discharges to sewers.

(5) The recovery of waste solvents is a common practice among plants using solvents in their manufacturing processes. However, to reduce further the amount of waste solvent discharge, plants have instituted such measures as (a) incineration of solvents that cannot be recovered economically, (b) incineration of "bottoms" from solvent recovery units, and (c) design and construction of solvent recovery columns which operate beyond the economical recovery point.

(6) The use of barometric condensers can result in significant water contamination, depending upon the nature of the materials entering the discharge water stream. In addition, barometric condensers use very large quantities of water, which results in substantial increases in the total amount of process-wastewater. (For example, plant 12256 utilizes more than 20 MGD of once-through barometric condenser water.) On the other hand, several plants are using surface condensers which do not involve direct contact contamination.

(7) Several plants are using a recirculation system as a means of greatly reducing the amount of contaminated water being discharged from water-sealed vacuum pumps.

(8) Reduction of once-through cooling water by recycling through cooling towers is used in numerous plants and results in decreased total volume of discharge.

(9) Separation of manufacturing area stormwater is practiced throughout the industry and often facilitates the isolation and treatment of contaminated runoff.

(10) Spill prevention is recognized in the industry as a critical aspect of pollution control. In addition to careful management of materials and methods, such preventive steps as impoundment basins are utilized in many cases.

(11) Wash waters can be reduced or eliminated in many situations by use of dry cleanup methods. Containment control and removal of either liquid or solid dry process wastes can often be accomplished using little or no water. This particular approach can possibly completely eliminate wastewater discharge, especially in subcategory D (Formulation) plants, where washwater is often the only wastewater source.

C. IN-PLANT TREATMENT

Besides implementing source controls to reduce or eliminate the waste loads generated within the manufacturing process, plants may also employ in-plant treatment directed at removing certain pollutants before they are combined with the plant's overall wastewaters and are thus diluted.

This concept of in-plant treatment of a segregated stream is of major importance. First, treatment technologies can be directed specifically toward a particular pollutant. Also, since wastewater treatment and pollutant removal costs are strongly influenced by the volume of water to be treated, the costs involved in treating a segregated stream are considerably less than they would be in treating combined wastewater. Also, chemicals other than those being treated are less likely to interfere with the treatment technology if treatment occurs before commingling.

In-plant treatment processes can be visualized as end-of-pipe treatment for a particular production process or stage within the plant itself, designed to treat specific waste streams. Although in-plant technologies can remove a variety of pollutants, their principal applications are for the treatment of toxic or priority pollutants. In the pharmaceutical manufacturing industry, three classes of priority pollutants are of particular importance. As indicated in Section V, the major priority pollutants are solvents, metals, and cyanide. Thus, the discussions presented below on in-plant technologies concern the treatment of these three classes of pollutants.

The 308 data base was the principal source of information relating to the use of in-plant treatment in the pharmaceutical industry. Most of this information came from the Supplemental 308 Portfolio responses. In addition, while not specifically requested in the original 308 Portfolio, some in-plant treatment information was obtained from the original 308 Portfolio plants. It was gathered via three mechanisms: a) some plants provided "additional" data or comments relative to in-plant treatment on the questionnaire; b) a small amount of information was gathered by direct contact with plant personnel; and c) the wastewater sampling programs discussed in Section II identified the use of a few in-plant technologies. Some information on in-plant steam stripping was also obtained following proposal (a) as a result of the Agency's efforts to locate an appropriate plant at which to evaluate the performance of steam stripping technology and (b) as a result of responses obtained from a post proposal 308 questionnaire concerning the discharge of toxic volatile organics by indirect discharging pharmaceutical plants. The responses to this 308 questionnaire will be discussed in the part of this section that deals with steam stripping.

Table VII-1 presents a summary of in-plant treatment technologies identified from the various data bases along with the number of plants that employ each process.

1. Cyanide Destruction Technologies

Cyanide destruction is employed in the pharmaceutical industry, as noted by the 308 responses by limited direct inquiry, and by information from the S/V program.

Two treatment processes have been found to be effective in treating cyanide-bearing waste streams in the pharmaceutical industry; chemical oxidation and high pressure and temperature hydrolysis. Chemical oxidation is a reaction in which one or more electrons are transferred from the chemical being oxidized to the chemical initiating the transfer (oxidizing agent). As a result of the valance change, the oxidized substance can then react to form a more desirable compound. The hydrolysis treatment requires the application of high temperature and pressure to break down chemical bonds; the end result is that more tolerable substances are formed (e.g., CO_2 and NO_2). Under some circumstances, cyanide ions may combine with metals to form inert complexes which may interfere with removal of both the cyanide and the metal. Of the comonmly encountered metals,

TABLE VII-1

SUMMARY OF IN-PLANT TREATMENT PROCESSES

In-Plant Technology	Number of Plants
Cyanide Destruction	9
Chromium Reduction	1
Metals Precipitation	4
Solvent Recovery	30
Steam Stripping	8
Other Technologies	21
Evaporation	10

chromium, manganese, and iron form inert complexes, while nickel and mercury form labile complexes:

Cyanide Complexes

Inert	Labile
$Cr(CN)_6^{-4}$	$Ni(CN)_4^{-2}$
$Mn(CN)_6^{-3}$	$Hg(CN)_4^{-2}$
$Fe(CN)_6^{-3}$	

Although they are classified as inert, cyanide will be released from the inert complexes over an extended period of time. However, this time period may exceed the residence time in the cyanide destruction unit and cyanide from these complexes would not be destroyed. The labile complexes will present no interference with cyanide destruction.

An evaluation of cyanide limitations practically achievable by chemical oxidation and hydrolysis technologies must consider the following:

(1) Theoretical reaction equilibrium limits.

(2) Conditions under which cyanate reversion can occur.

(3) Competitive reactions resulting in increased oxidant consumption.

(4) Chemical interferences such as iron complexing and the processing alternatives necessary to avoid them.

(5) Physical interferences which might hamper reactant availability and design methods to overcome them.

a. Chlorination

Destruction of cyanide by oxidation either with chlorine gas under alkaline conditions or with sodium hypochlorite is a very common method of treating industrial wastewaters containing cyanide. Although more costly, sodium hypochlorite is less hazardous and is simpler to handle. Oxidation by chlorine under alkaline conditions can be described by the following two-step chemical reaction:

$$Cl_2 + NaCN + 2\ NaOH = NaOCN + 2\ NaCl + H_2O$$

$$3Cl_2 + 6NaOH + 2NaOCN = 2\ NaHCO_3 + N_2 + 6\ NaCl + 2\ H_2O$$

Cyanide is oxidized to cyanate completely and rapidly at a pH of about 9.5 to 10.0. Usually 30 minutes are required to insure a complete reaction. The oxidation of cyanide to cyanate is

accompanied by a marked reduction in volatility and a thousandfold reduction in toxicity.

However, since cyanate may revert to cyanide under some conditions, additional chlorine is provided to oxidize cyanate to carbon dioxide and bicarbonate. At pH levels around 9.5 to 10.0, several hours are required for the complete oxidation of the cyanate, but only one hour is necessary at a pH between 8.0 and 8.5. Also, excess chlorine must be provided to break down cyanogen chloride, a highly toxic intermediate compound formed during the oxidation of cyanate.

Although stoichiometric oxidation of one part of cyanide to cyanate requires only 2.73 parts of chlorine, in practice 3 to 4 parts of chlorine are used. Complete oxidation of one part cyanide to carbon dioxide and nitrogen gas theoretically requires 6.82 parts of chlorine, but nearly 8 parts are normally necessary in practice. The chlorine required in practice is higher than the theoretical amount because other substances in the wastewater compete for the chlorine.

Soluble iron interferes seriously with the alkaline chlorination of cyanide wastes. Iron and cyanide form a stable complex which is impervious to chlorine oxidation. Similar difficulties result from formation of nickel cyanides. However, it has been reported that ferrocyanides are treatable by alkaline chlorination at a temperature of 71°C (160°F) and at a pH of about 12.0. (109)

Ammonia also interferes with the chlorine oxidation process since the chlorine demand is increased by the formation of chloramines. When cyanide is only being oxidized to cyanate, it is usually not economical to remove the ammonia by breakpoint chlorination, which requires almost 10 parts of chlorine per part of ammonia. Complete cyanate formation can be accomplished by allowing an extra 15 minutes contact time. An example of a cyanide destruction system using chlorination is shown in Figure VII-1.

Because of some of the advantages of the chlorination process, this technology has received widespread application in the chemical industry as a whole. It is a relatively low cost system and does not require complicated equipment. It also fits well into the flow scheme of a wastewater treatment facility. The process will operate effectively at ambient conditions and is well suited for automatic operation, thus minimizing labor requirements. This technique is used by pharmaceutical manufacturers who use cyanide in chemical synthesis.

The chlorination process, however, does have limitations and disadvantages. For example, toxic, volatile intermediate-reaction products can be formed. Thus, it is essential to control properly the pH to ensure that all reactions are carried to their end point. Also, for waste streams containing other oxidizable matter, the chlorine may be consumed in oxidizing these materials

FIGURE VII-1

CYANIDE DESTRUCTION SYSTEM - CHLORINATION

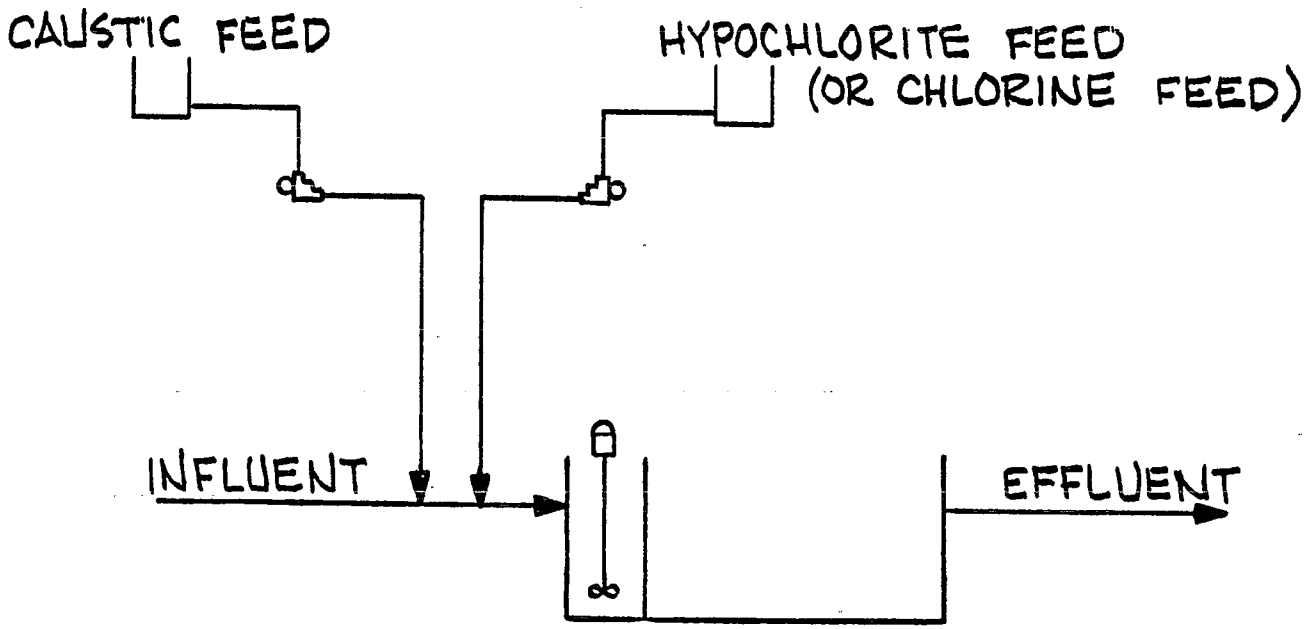

and this may interfere with the treatment of the cyanide. Finally, for those systems using gaseous chlorine, a potentially hazardous situation exists when it is stored and handled.

The oxidation of cyanide-bearing wastewaters by using chlorine under basic conditions is a classic technology. However, its use by the pharmaceutical industry is limited to a few plants. In the Agency's study of the electroplating industry, EPA learned that cyanide levels around 40 $\mu g/l$ are achievable by in-plant chlorination processes, if reaction interferences are not present. (109) In addition, the Final Development Document for the Inorganic Chemicals Industry (71) indicates that the free cyanide level after chemical oxidation treatment is generally below 100 ug/l. The extent to which the various materials found in pharmaceutical wastewater may interfere with chlorine oxidation is not known. The presence of interfering substances in pharmaceutical manufacturing wastewater may, in fact, prevent the attainment of these levels using the alkaline chlorination method.

Chemical oxidation of cyanide is currently the most prevalent technique used by pharmaceutical plants to destroy cyanide. However, the available data from plants using this method does not permit an adequate evaluation of the cyanide destruction capability of this technique as applied to pharmaceutical wastewater and, therefore, no data describing this the method has been used in the development of final cyanide regulations for the pharmaceutical manufacturing point source category.

b. Ozonation

Ozone is a good oxidizing agent and can be used to treat process wastewaters that contain cyanide. In fact, ozone oxidizes many cyanide complexes (for instance, iron and nickel complexes) that are not broken down by chlorine. Ozonation is primarily used to oxidize cyanide to cyanate.

With traces of copper and manganese as catalysts, cyanide is reduced to very low levels, independent of starting concentrations and the form of the complex. The oxidation of cyanide by ozone to cyanate occurs in about 15 minutes at a pH of 9.0 to 10.0, but the reaction is almost instantaneous in the presence of traces of copper. The pH of the cyanide waste is often raised to 12.0 in order that complete oxidation occurs before the pH drops to 8.0, at which point cyanide begins to evolve in the form of HCN.

Oxidation of cyanate to the final end products, nitrogen and bicarbonate, is a much slower and more difficult process unless catalysts are present. Therefore, since ozonation will not readily effect further oxidation of cyanate, it is often coupled with such independent processes as dialysis or biological oxidation.

The ozonation treatment process is being used on an increasing basis. Its initial applications in treating metal finishing wastewater have shown it to be quite effective for cyanide removal. Like chlorination, the ozonation process is well suited to automatic control and will operate effectively at ambient conditions. Also, the reaction product (oxygen) is beneficial to the treated wastewater. Since the ozone is generated on-site, procurement, storage, and handling problems are eliminated.

The ozonation process does have drawbacks. It has higher capital and operating costs than chlorination and similar toxicity problems; also, as with chlorination, increased ozone demand is possible if other oxidizable matter is present in the waste stream. Finally, in most cases, the cyanide is not effectively oxidized beyond the cyanate level.

c. Alkaline Hydrolysis

Removal of cyanide from process wastewaters can be accomplished without the use of strong oxidizing chemicals. For the alkaline hydrolysis system, the principal treatment action is based upon the application of heat and pressure. In this process, a caustic solution is added to the cyanide-bearing wastewaters to raise the pH to between 9.0 and 12.0. Next, the wastewater is transferred to a continuous flow reactor where it is subjected to temperatures of about 165°C to 185°C (329°F to 365°F) and pressures from approximately 90 to 110 psi. The breakdown of cyanide in the reactor is generally accomplished with a residence time of about 1.5 hours. An example of an alkaline hydrolysis system for treating cyanide-bearing wastewaters is shown in Figure VII-2.

The absence of specific chemical reactants in this process eliminates procurement, storage, and handling problems. As with other cyanide processes, alkaline hydrolysis is well suited to automatic control.

In the pharmaceutical industry, wastewaters having high concentrations of cyanide are more likely to be treated by alkaline hydrolysis, for economic reasons.

As in the case of chlorination, data are available regarding the pharmaceutical industry's use of alkaline hydrolysare for cyanide treatment. The data available from these plants indicated that the cyanide levels reached by this technology are similar to those achieved by the chlorination process. Long-term performance data has been submitted by two plants (12236 and 12235) which use this method to destroy cyanide in their wastewater. The available data indicate that an average effluent level of 5.25 mg/l is achievable for cyanide. This level is a direct measure of what is achievable as a result of the alkaline hydrolysis technique.

FIGURE VII-2

CYANIDE DESTRUCTION SYSTEM - ALKALINE HYDROLYSIS

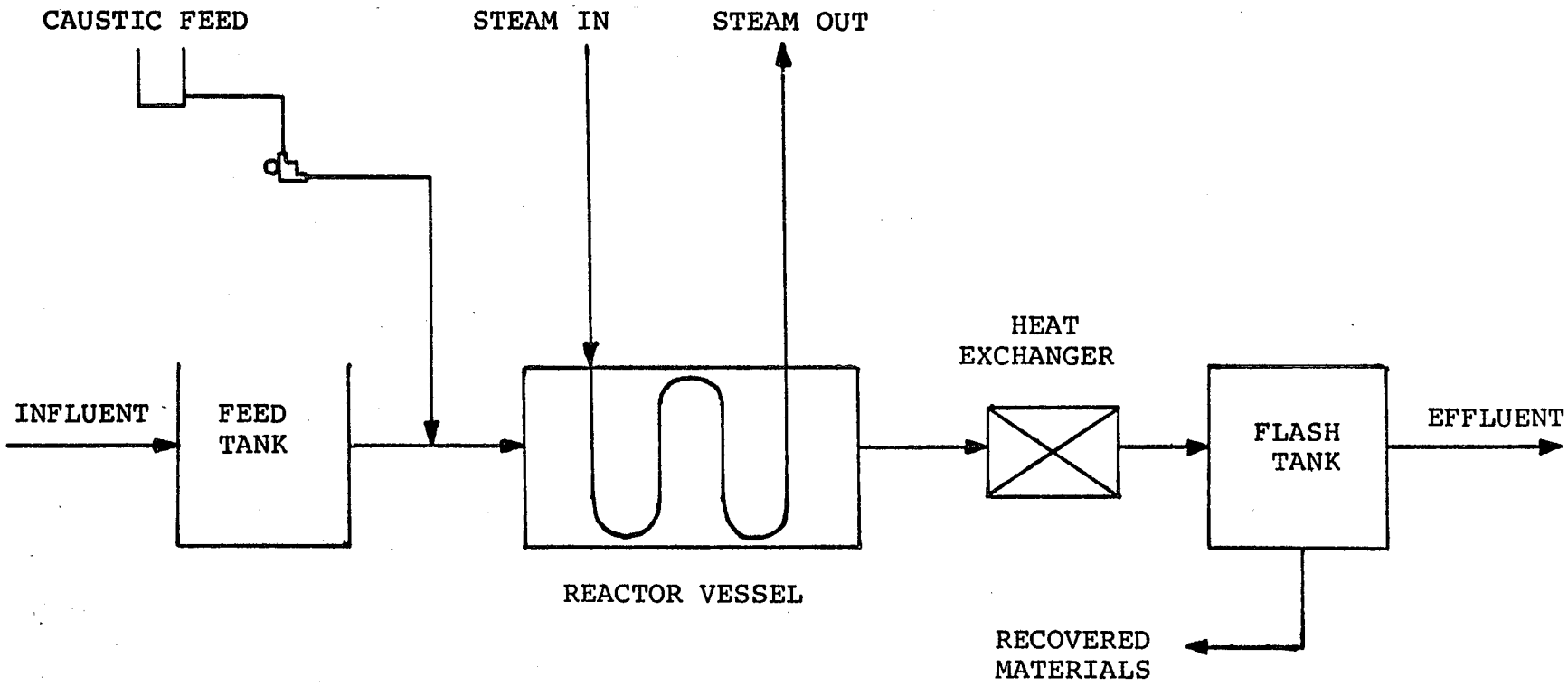

2. Metals Removal Technologies

This discussion of metals removal technologies is presented even though the Agency is not promulgating effluent guidelines limitations for metals. It is intended to aid permit writers and others who may, at some point, have an interest in the performance of these technologies.

Proven metals treatment technologies are based upon precipitation and filtration. Based on the solubility products (Ksp) quoted for insoluble metal salts (113), the concentration of metal ions in a saturated solution can be calculated and are listed below:

Compound	Ksp	Metal Ion Concentration ($\mu g/l$)
CuS	6×10^{-36}	1×10^{-10}
NiS	2×10^{-25}	8×10^{-6}
ZnS	1.6×10^{-25}	2×10^{-5}
HgS	3.5×10^{-52}	3×10^{-18}
$Cu(OH)_2$	3.5×10^{-19}	25
$Ni(OH)_2$	1.5×10^{-15}	400
$Zn(OH)_2$	1.8×10^{-14}	1×10^{-3}
$Cr(OH)_3$	6.7×10^{-31}	6×10^{-1}

These concentrations represent theoretically achievable levels. Comparison of theoretically achievable treatment levels of metal priority pollutants to levels specified in final regulations for other categories (i.e., metal finishing) shows that sulfide precipitation is theoretically capable of removing the metals to levels several orders of magnitude lower than the levels that are practically achieved. Theoretical metal concentrations resulting from hydroxide precipitation are also lower then the levels generally achievable by hydroxide precipitation as practiced.

Thus, in most cases, the solubility level will not be the controlling factor in establishing minimum levels. Practical limits of removal are dictated by other circumstances, many of which are peculiar to particular treatment processes. The efficiency of physical removal of precipitated solids by such means as filtration or clarification is limited by such particle characteristics as particle size and stability, which are functions of pH and of other chemicals present. Many metal cations are subject to chemical complexing that transforms them into an unprecipitable species, causing interference with their removal.

Treatment system performance under industrial operating conditions is shown in Table VI-5. The levels shown are estimates of practical attainable long-term average effluent concentrations for priority pollutant metals. Of the six metals of special interest in this study, copper, chromium, lead, and

nickel are generally amenable to reductions to approximately 500 μg/l at the point of metals treatment. Although zinc reductions to about 500 μg/l are reported, 1,200 μg/l may be a more realistic limit for the zinc content of wastewater since a higher final concentration is also reported for all three treatment methods. Mercury concentrations, though not treatable by alkaline precipitation, may be reduced to around 50 ug/l after sulfide precipitation and filtration.

a. Chemical Reduction

Chromium and some other metals must be reduced from their high valence states before they can be precipitated. This is accomplished by chemical reduction, a reaction in which one or more electrons are transferred from the chemical initiating the transfer (reducing agent) to the chemical being reduced.

An application of chemical reduction in the treatment of industrial wastewater is in the reduction of hexavalent chromium to trivalent chromium. Chromium is a common metal contaminant in pharmaceutical industry wastewaters; its chemical reduction is employed as an in-plant treatment by the industry. The reduction enables the trivalent chromium in conjunction with other metal salts to be separated from solution by precipitation. Sulfur dioxide, sodium bisulfite, sodium metabisulfite, and ferrous sulfate are strong reducing agents in aqueous solution and are, therefore, useful in industrial waste treatment facilities for the reduction of hexavalent chromium to trivalent chromium.

The chemical reduction of chromium wastes by sulfur dioxide is a well-known and widely accepted treatment technology in numerous plants employing chromium or other high valence ions in their manufacturing operations. An application of this technology to treat process wastewaters containing chromates is described in Figure VII-3. The reactions involved may be illustrated as follows:

$$3SO_2 + 3H_2O = 3H_2SO_3$$

$$3H_2SO_3 + 2H_2CrO_4 = Cr_2(SO_4)_3 + 5H_2O$$

This reaction is favored by a low pH;, a value of 2.0 to 3.0 is normally required for complete reduction. At pH levels above 5.0, the reduction rate is slow. Such oxidizing agents as dissolved oxygen and ferric iron interfere with the reduction process by consuming the reducing agent. The sulfate precipitate can be removed by filtration or clarification.

Chemical reduction has been used quite successfully to treat large concentrations of hexavalent chromium (e.g., from metal finishing operations). This method is well suited to automatic control and may be used under ambient conditions.

FIGURE VII-3

CHROMIUM REDUCTION SYSTEM

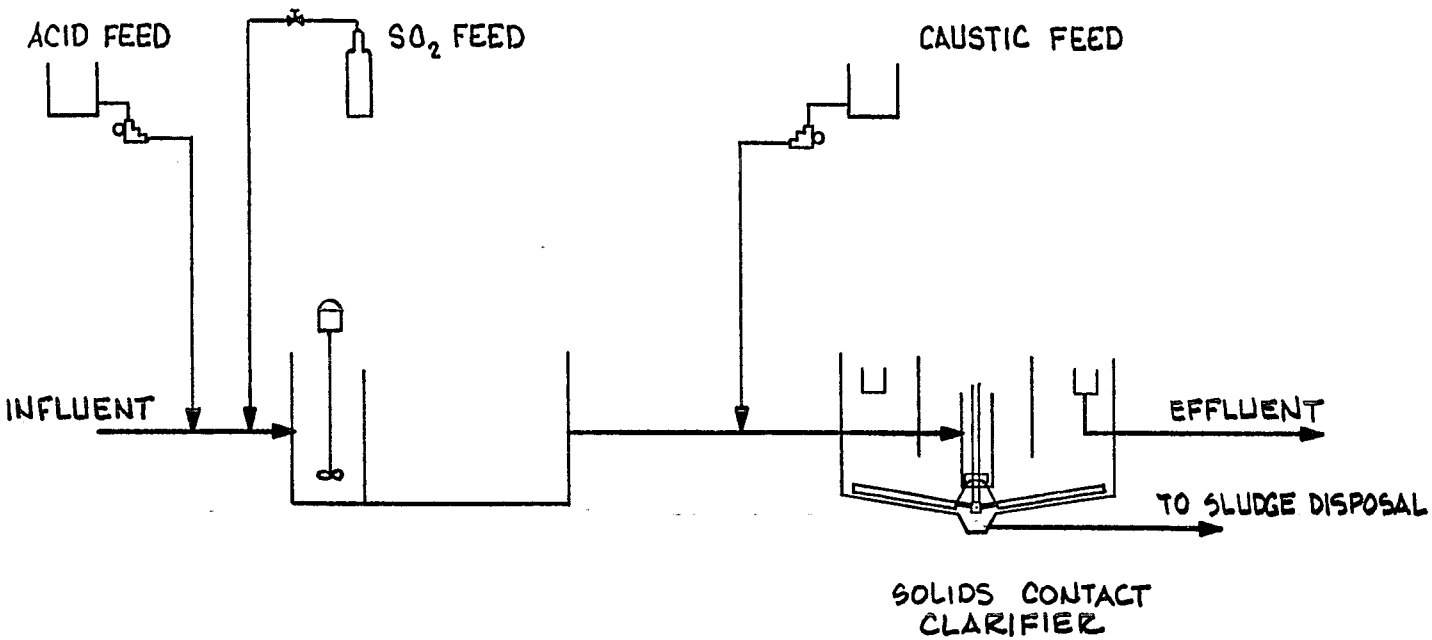

Chemical reduction, however, is not without some limitations. Careful pH control is required for effective reduction. In addition, when waste streams contain other reducible matter, the reducing agent may be consumed, depleting that available for treatment of the metals. Also, for those systems using sulfur dioxide, a potentially hazardous situation exists when it is stored and handled. Data indicate that chromium levels below 500 $\mu g/l$ can be achieved from in-plant chromium reduction processes in combination with hydroxide precipitation followed by clarification.(109)

b. Alkaline Precipitation

The solubility of metal hydroxides, in most cases, is a function of pH; therefore, the success of metal hydroxide precipitation treatment is heavily dependent on the pH level of the solution. In order to achieve optimum formation of solid metal hydroxides, the pH of the wastewater must be adjusted to the range (usually moderately alkaline) found to be most effective for the metal(s) involved. This is accomplished by measured addition of lime to the wastewater with concurrent pH monitoring.

Following the attainment of optimum pH conditions, the solid metal hydroxides are coagulated (using coagulating agents) in a clarifier and deposited as sludge. Proper clarifier design and good coagulation are important prerequisites for efficient metals removal by alkaline precipitation.

If substantial sulfur compounds are present in the wastewater, caustic soda (sodium hydroxide) may be used instead of lime to prevent calcium sulfate formation which would increase sludge volume. Treatment chemicals for adjusting pH prior to clarification may be added to a rapid mix tank, to a mix box, or directly to the clarifier, especially in batch clarification. If such metals as cadmium and nickel are in the wastewater, a pH in excess of 10.0 is required for effective precipitation. This pH, however, is unacceptable for discharged wastewater; therefore, the pH must be reduced by adding acid. The acid is usually added as the treated wastewater flows through a small neutralization tank prior to discharge. An example of a metals removals system using alkaline precipitation is shown in Figure VII-4.

There are several advantages to the use of alkaline precipitation. In the first place, it is a well demonstrated wastewater treatment technology. It is well suited to automatic control and will operate at ambient conditions. Also, in many instances, preceding treatment steps adjust the waste (especially pH) to aid the alkaline precipitation process. The end result is that the costs associated with this technology may be substantially lower than those for other processes. However, this method is subject to interference when mixed wastes are treated. In addition, this process can generate relatively high quantities of sludge that also require disposal.

FIGURE VII-4

METALS REMOVAL SYSTEM--ALKALINE PRECIPITATION

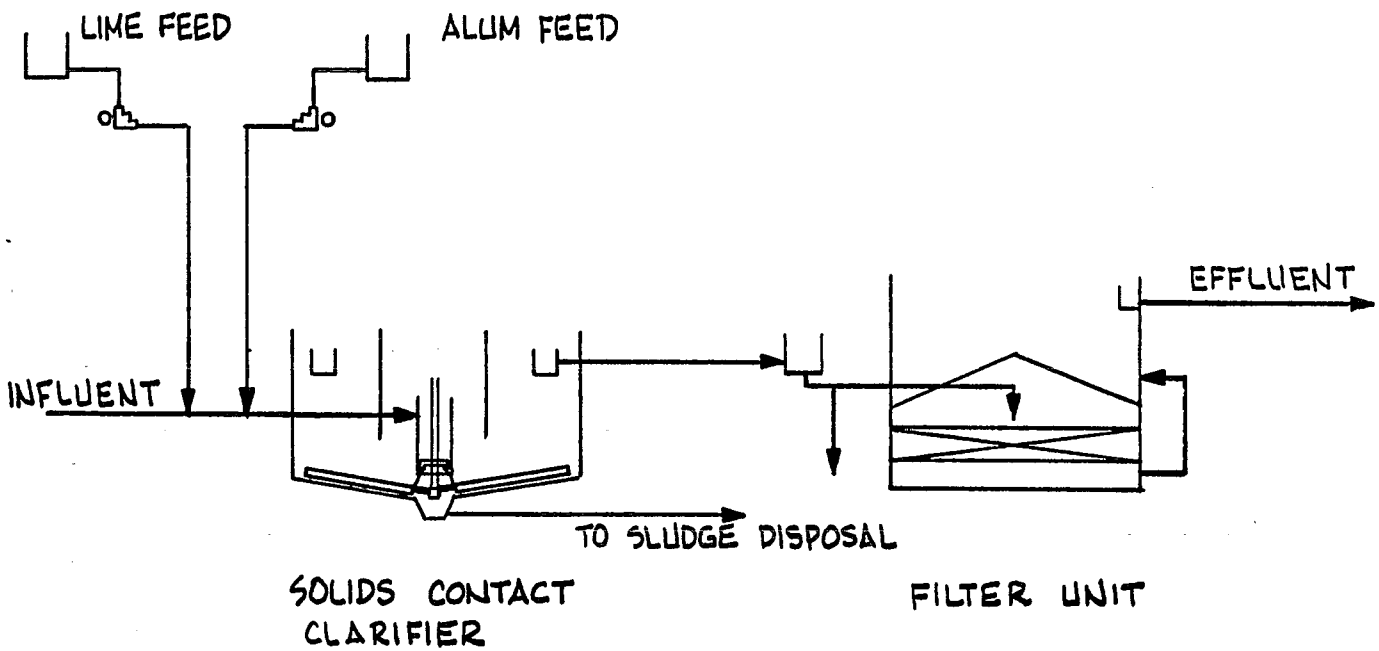

Alkaline precipitation is a classic technology being used by plants in a number of industry categories, although its use by the pharmaceutical industry has been limited. The EPA study to develop BPT regulations for the electroplating industry (109) indicated that the alkaline precipitation process is capable of achieving the following long-term effluent levels: 300 ug/l for chromium and zinc, 200 ug/l for copper, 100 ug/l for lead, and 500 ug/l for nickel.

c. Sulfide Precipitation

In this process, heavy metals are removed as a sulfide precipitate. Sulfide is supplied by adding a very slightly soluble metal sulfide that has a solubility somewhat greater than that of the sulfide of the metal to be removed. Normally, ferrous sulfide is used. It is fed into a precipitator where excess sulfide is retained in a sludge blanket that acts both as a reservoir of available sulfide and as a medium to capture colloidal particles.

The process is applicable for treatment of all heavy metals. The process equipment required includes a pH adjustment tank, a precipitator, a filter, and pumps to transport the wastewater. The filter is optional and may be a standard, dual-media pressure filter.

A variation of the process utilizes sulfide for reducing hexavalent chromium. Ferrous sulfide at a pH of 8.0 to 9.0 acts as an agent to reduce the hexavalent chromium and then precipitates it as a hydroxide in one step. Hexavalent chromium wastes do not have to be isolated and pretreated by reduction to the trivalent form.

With respect to the generated sludge, sulfide sludges have been found to be less subject to leaching than hydroxide sludges. However, sulfide precipitation produces sludge in greater volumes (requiring more available storage space) and requires greater expenditures for chemicals than does alkaline precipitation. Pollutant levels after treatment with sulfide precipitation are very similar to the pollutant levels after alkaline precipitation.

3. Solvent Recovery and Removal

Solvents are used extensively in the pharmaceutical manufacturing industry. Because such materials are expensive, most manufacturers try to recover them in order to purify them for reuse whenever possible. Solvent recovery operations typically employ such techniques as decantation, evaporation, distillation, and extraction. The feasibility and extent of recovery and purification are governed largely by the quantities involved and by the complexity of solvent mixtures to be separated. If recovery is not economically practicable, the used solvents may

have to be disposed of by means of incineration, landfilling, deep-well injection, or contract disposal.

Even when an effort is made to recover solvents, some wastewater contamination can be expected. Removal of small quantities of organic solvents from the segregated wastewater can be accomplished by such techniques as steam stripping or carbon adsorption. Further removal of solvents from combined end-of-pipe wastewater may result from biological treatment or from surface evaporation in the treatment system.

4. Steam Stripping

a. Introduction

Steam stripping is the transfer of the volatile constituents of a wastewater to the vapor phase which occurs when steam is passed through a preheated wastewater. Extremely volatile compounds can be steam stripped from wastewater in flash tanks which provide essentially one stage of liquid-vapor contact. More difficult separations are conducted in columns filled with packing materials which provide large surface areas for liquid-vapor contact. Conventional fractionating columns, which contain a series of liquid-vapor contact stages, are used for the most difficult separations. Flash tanks, packed towers, and plate columns are used extensively in the chemical process industries and their designs are discussed in chemical engineering textbooks. (138) (139) (140) Hwang and Fahrenthold have considered the thermodynamic aspects of steam stripping organic priority pollutants from wastewater. (72) The authors predict the effluent concentrations theoretically achievable by steam stripping and the actual number of liquid-vapor contact stages required.

Steam stripping is an available technology for removal of methylene chloride, toluene, chloroform, and benzene. Section VIII presents suggested limits for these four pollutants based on the performance of wastewater steam strippers at a pharmaceutical plant. Steam stripper operations at plant 12003 are discussed following the general discussion of steam stripping.

b. General

In a steam stripper, the components of a wastewater are separated by partial vaporization. When contacted with steam, the volatile organic compounds in a wastewater are driven into the vapor phase. The extent of the separation is governed by the physical properties of the organic compounds, the temperature and pressure at which the stripper is operated, and the arrangement and type of equipment used.

A column used to steam strip solvents from wastewater is shown on Figure VII-5. Solvent contaminated process wastewaters and

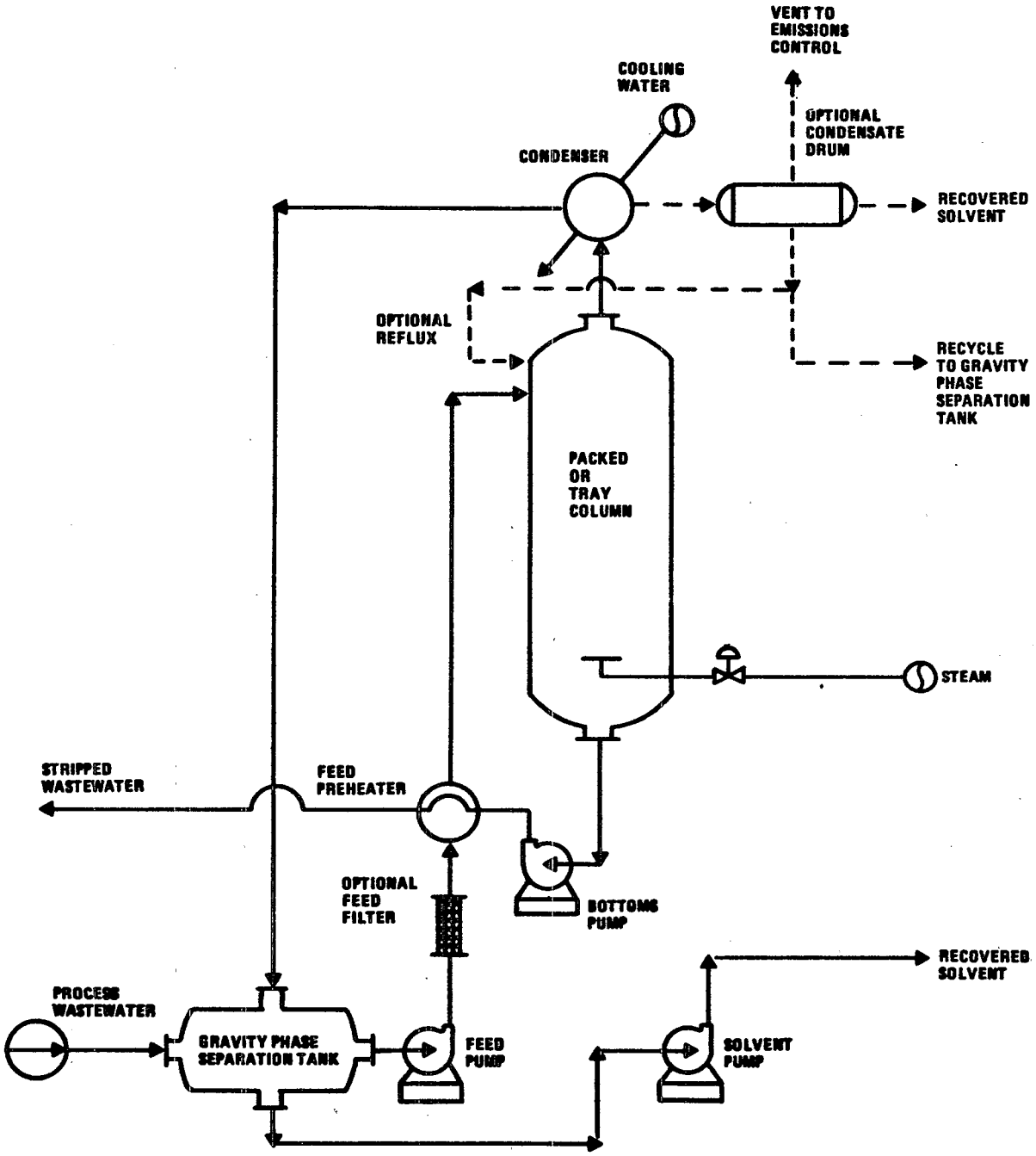

FIGURE VII–5. TYPICAL EQUIPMENT FOR STEAM STRIPPING SOLVENTS FROM WASTEWATER.

condensed overhead vapors from the stripper are allowed to accumulate in a gravity phase separation tank. When the equilibrium solubility of the solvents in water is reached, the difference between the specific gravities of the water and the solvents results in the formation of two immiscible liquid layers. One layer contains the immiscible solvents; the other layer is an aqueous solution which is saturated with solvents. The solvent layer is pumped to storage. The composition of the recovered solvent and economic factors will determine whether the solvent is reused within the plant, disposed of, used as incinerator fuel, sold to other industrial users, or sold to a solvent reclamation facility. Solvents recovered by steam stripping are normally not reused directly in pharmaceutical synthesis because of FDA purity requirements.

The aqueous layer from the gravity phase separation tank is pumped through a preheater where the temperature is raised by heat exchange with the stripper effluent. If the feed contains high concentrations of suspended solids, a filter can be installed prior to the preheater to prevent fouling in the preheater and the column.

After preheating, the solvent saturated water is introduced at the top or near the middle of the column and flows by gravity through the stripper. The hot effluent, which is discharged at the bottom of the stripper, is used as a heating medium in the feed preheater. Steam is injected through a sparger and rises countercurrent to the flow of the water.

The solvent laden overhead vapors are condensed and the organic and aqueous layers are allowed to separate by gravity in a condensate drum. The solvent can be recovered by decanting the immiscible liquid layers, or by recycling the condensed vapors directly to the gravity phase separation tank. This practice is particularly advantageous in cases where the wastewater to be steam stripped contains low concentrations of the solvent to be recovered. As the condensate mixes with the wastewater already in the tank, the solvent concentration increases to the point where a two phase mixture is formed. The aqueous phase, which is fed to the column, will be saturated with solvent. The most economical operation of a wastewater steam stripper occurs when the feed is saturated with the solvent to be recovered.

In certain situations, reflux may be required to produce overhead vapors which, when condensed, will separate into immiscible liquid layers. Initially, the condensate is allowed to accumulate in a condensate drum. When the solvent concentration exceeds the water solubility limit, two liquid layers form. The solvent rich layer is pumped to storage. A portion of the solvent saturated aqueous layer is returned to the column (refluxed) and the remainder is recycled to the gravity phase separation tank. The reflux is introduced at a position above the point where the feed enters the column.

At plants where steam pressure fluctuations can occur, automatic feedback controllers are commonly used to maintain the desired solvent concentrations in the stripper bottoms and overhead vapors. A detailed discussion of the use of automatic feedback controllers for this purpose is included in the 4th Edition of the Chemical Engineers Handbook. (141)

Information gathered by the Agency indicates that steam stripping is used to remove organic solvents and other pollutants from wastewater discharges from at least six pharmaceutical plants and that steam stripping is also used to treat similar wastewaters in other industries. Data on the removal of toxic volatile organic pollutants in steam strippers at plants where pesticides and organic chemicals are manufactured are presented in the Proposed Development Document for Effluent Limitations Guidelines and Standards for the Pesticides Point Source Category.(142) Steam stripping operations at an indirect discharging pharmaceutical manufacturer are discussed below.

c. Steam Stripper Operations at Plant 12003

Plant 12003 has the capability to operate at least eight different steam strippers. The strippers are located throughout the plant within production buildings or at central solvent recovery operations in other buildings. Steam stripping enables the plant to meet a POTW requirement that the concentration of explosive vapors in the plant sewer pipes not exceed 40 percent of the lower explosion limit (LEL). The LEL is monitored in each production area with a flame-thermocouple sensor. Gas samples are automatically taken and analyzed by gas chromatography if the solvent vapor concentration exceeds 30 percent of the LEL. The stripped wastewaters are combined with sanitary and other process wastewaters in a pretreatment system which consists of oil skimming, pH adjustment, and flow equalization.

The recovered solvents from the stripping operations are currently stored for disposal by contract hauling. Plant personnel informed EPA that they were considering using some of the recovered solvents as fuel for an incinerator. Agency representatives visited plant 12003 during the week of May 23-27, 1983, and sampled the influent and effluent from a packed column stripper and a steam distillation flash tank.

d. Packed Column Steam Stripper

Five days of operating data from a packed column steam stripper used to remove methylene chloride from wastewater at plant 12002 are shown in Table VII-2. In addition to methylene chloride, analysis by plant personnel confirmed that methanol, diethyl ether, and pyridine were present in the wastewater. Usually, the stripper operates approximately 12 hours a day, five days a week. During periods of low production, the stripper is shut down and

Table VII - 2. Methylene Chloride Removal in Packed Column Steam Stripper at Plant 12003. Operating Data for 5/23/83.

Sample Number	Feed Temp. (°C)	Overhead Temp. (°C)	Bottoms Temp. (°C)	Feed Rate (gpm)	Steam Rate (lbs/hr)	Methylene Chloride (mg/l)	
						Influent	Effluent
1	87	97	104	9.6	160	NA[1]	0.926
2	86	98	102	8.9	160	NA	5.10
3	86	94	101	9.0	150	NA	4.94
4	86	89	102	9.0	150	NA	3.00
5	85	89	102	9.0	150	NA	1.99
6	85	86	102	9.0	150	NA	5.70
7	85	84	102	9.0	155	NA	22.80[2]
8	84	84	101	9.0	155	NA	38.05[2]
Composite of influent samples 1-8						8,250	NA
Average of all effluent datum points							10.31
Average of effluent datum points obtained under normal operating conditions							3.61

[1]NA means not analyzed.
[2]Effluent concentrations under upset conditions, overhead temperature < 85°C.

Table VII - 2. Methylene Chloride Removal in Packed Column Steam Stripper at Plant 12003. Operating Data for 5/24/83. (Continued Page 2 of 5)

Sample Number	Feed Temp. (°C)	Overhead Temp. (°C)	Bottoms Temp. (°C)	Feed Rate (gpm)	Steam Rate (lbs/hr)	Methylene Chloride (mg/l)	
						Influent	Effluent
9	84	87	101	8.7	150	NA[1]	3.90
10	84	89	101	9.0	154	NA	8.36
11	83	86	100	8.9	155	NA	20.60
12	85	90	101	8.9	150	NA	4.07
13	84	89	101	9.0	150	NA	10.70
14	84	86	101	9.0	150	NA	20.30
15	84	87	101	9.0	150	NA	4.80
16	84	85	101	9.0	150	NA	7.87
Composite of influent samples 9-16						225[2]	NA
Average of all effluent datum points							10.08

[1]NA means not analyzed.
[2]This datum point is suspect. Plant 12003 collected duplicate samples and reported an average influent methylene chloride concentration of 10,305 mg/l.

Table VII - 2. Methylene Chloride Removal in Packed Column Steam Stripper at Plant 12003. Operating Data for 5/25/83. (Continued Page 3 of 5)

Sample Number	Feed Temp. (°C)	Overhead Temp. (°C)	Bottoms Temp. (°C)	Feed Rate (gpm)	Steam Rate (lbs/hr)	Methylene Chloride (mg/l)	
						Influent	Effluent
17	85	97	102	8.3	150	NA[1]	1.72
18	85	90	102	9.5	150	NA	1.63
19	85	88	102	8.5	150	NA	3.60
20	85	85	102	8.5	150	NA	14.25
21	85	84	102	8.5	150	NA	39.30[2,3]
22	82	83	100	8.5	150	NA	138.0[2,4]
23	83	83	101	UK[5]	152	NA	110.0[2]
24	83	83	UK	UK	155	NA	60.80[2]
Composite of influent samples 17-24						7,000	NA
Average of all effluent datum points							46.2
Average of effluent datum points obtained under normal operating conditions							5.30

[1]NA means not analyzed.

[2]Effluent concentrations under upset conditions, overhead temperature < 85°C.

[3]0.132 mg/l of 1,1-dichloroethylene was detected in effluent sample number 21.

[4]0.193 mg/l of 1,1-dichloroethylene and 0.302 mg/l of 1,2-dichloropropane were detected in effluent sample number 22.

[5]UK means unknown.

Table VII - 2. Methylene Chloride Removal in Packed Column Steam Stripper at Plant 12003. Operating Data for 5/26/83. (Continued Page 4 of 5)

Sample Number	Feed Temp. (°C)	Overhead Temp. (°C)	Bottoms Temp. (°C)	Feed Rate (gpm)	Steam Rate (lbs/hr)	Methylene Chloride (mg/l)	
						Influent	Effluent
25	84	89	102	8.3	149	11,200	10.1
26	84	86	101	8.3	149	9,900	22.85[1]
27	83	84	101	8.3	150	9,100	57.50[2]
28	82	83	101	8.3	150	9,400	115.00[2]
29	82	83	101	8.3	152	10,200	59.90[2]
30	81	82	101	8.3	152	11,800	127.00[2]
31	83	93	102	7.3	150	10,000	3.18
32	83	89	102	8.3	155	12,000	3.73
Average of all datum points						10,450	49.9
Average of effluent datum points obtained under normal operating conditions							10.0

[1]0.211 mg/l of 1,1,1-trichloroethane was detected in effluent sample number 26.

[2]Effluent concentrations under upset conditions, overhead temperature < 85°C.

Table VII - 2. Methylene Chloride Removal in Packed Column Steam Stripper at Plant 12003. Operating Data for 5/27/83. (Continued Page 5 of 5)

Sample Number	Feed Temp. (°C)	Overhead Temp. (°C)	Bottoms Temp. (°C)	Feed Rate (gpm)	Steam Rate (lbs/hr)	Methylene Chloride (mg/l)	
						Influent	Effluent
33	85	90	102	8.5	150	NA[1]	7.20
34	85	90	102	8.5	150	NA	4.04
35	85	95	102	8.5	154	NA	4.27
36	84	90	102	8.3	154	NA	1.47
37	84	89	102	8.1	154	NA	1.62
38	84	90	102	8.0	152	NA	2.63
39	84	88	102	8.0	160	NA	7.83
40	84	88	102	8.0	170	NA	15.80
Composite of influent samples 33-40						9,500	NA
Average of all effluent datum points							5.61

[1]NA means not analyzed.

wastewaters are allowed to accumulate. When the stripper resumes operation, it operates continuously for several days in a row.

The major portion of the feed to the stripper is wastewater from a batch chemical synthesis operation. The feed is pumped to the underground settling tank shown on Figure VII-6. In the settling tank the wastewater separates into two layers - immiscible methylene chloride and an aqueous solution saturated with methylene chloride and small amounts of methanol, diethyl ether, pyridine, and other solvents listed in the footnotes of Table VII-2. The immiscible methylene chloride is pumped off the bottom of the settling tank to a spent solvent holding tank. The aqueous solution is pumped to the stripper feed tank. The feed rate to the column is controlled by an automatic flow valve on the discharge side of the feed pump.

The wastewater is pumped through an influent filter and a preheater before it enters the top of the column through a liquid distributer - a special pipe outlet which serves to wet the tower packing uniformly. The ten-inch diameter column contains one 19-foot section packed with one-inch diameter stainless steel pall rings. Steam is injected through a sparger in the bottom of the stripper. The overhead vapors from the stripper are condensed and recycled to the underground settling tank.

The results of the five days of verification sampling are shown in Table VII-2. The average influent concentration of methylene chloride was 8,800 mg/l. The column influent also contains high concentrations of inorganic salts. According to plant personnel, the influent and effluent filters shown on Figure VII-6 were installed to prevent fouling in the feed preheater. The average effluent concentration of methylene chloride was 6.9 mg/l when the column was operated close to the design specifications of 98°C overhead vapor temperature. This corresponds to greater than 99 percent removal of methylene chloride in the packed column stripper. The packed column was operating under upset conditions, as indicated by a drop in the temperature of the overhead vapors below 85°C, during 10 of the 40 overhead temperature readings taken during sampling.

e. Steam Flash Tank

Five days of operating data from a steam flash tank used to strip toluene from wastewater at plant 12003 are shown in Table VII-3. In addition to toluene, analysis by plant personnel confirmed that methanol, ethanol, acetone, isopropanol, methyl ethyl ketone, and diethyl ether were present in the wastewater. The flash tank normally operates 7 hours a day, 5 days a week.

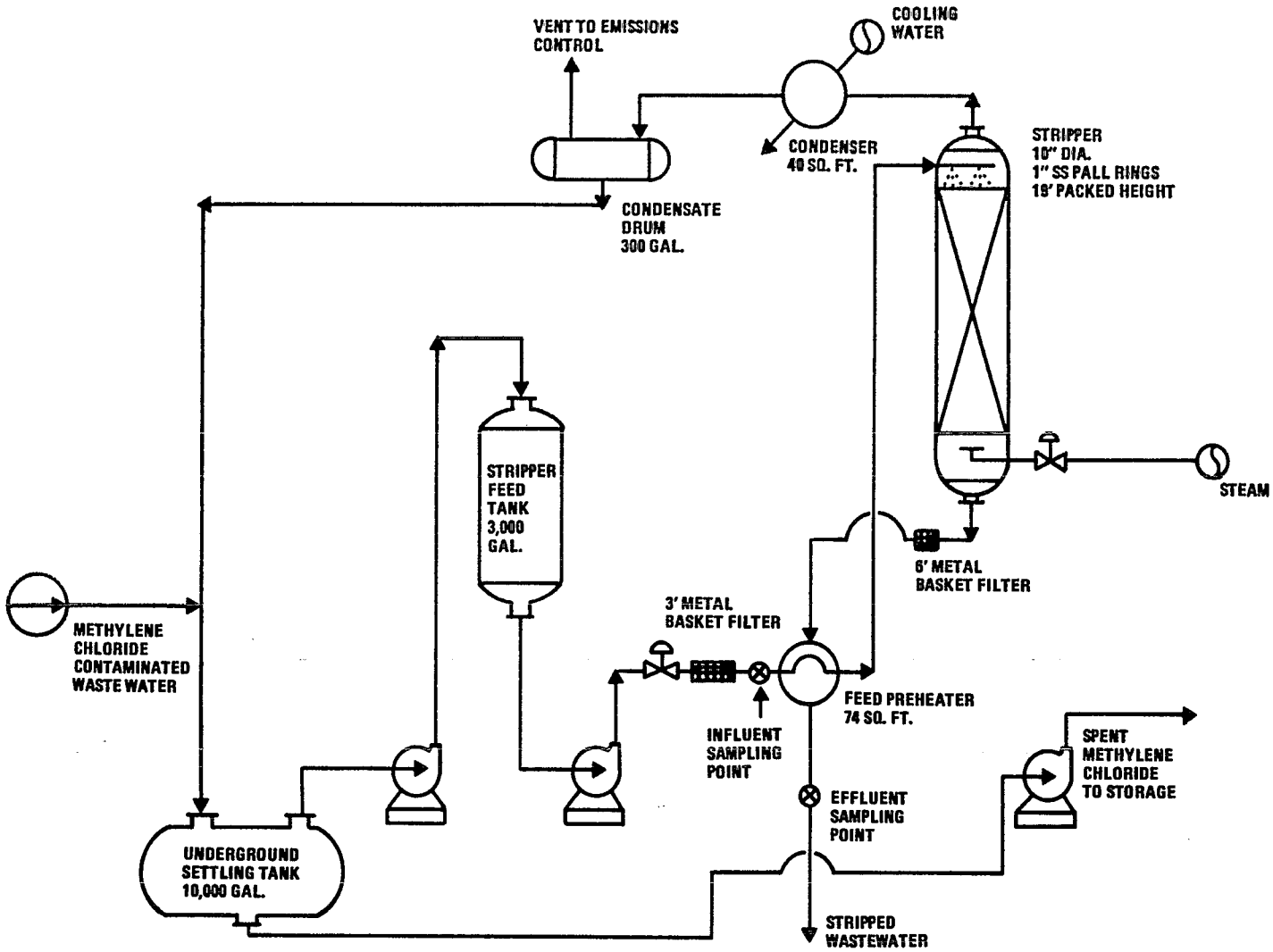

FIGURE VII – 6. PACKED COLUMN STEAM STRIPPER AT PLANT 12003.

Table VII-3. Toluene Removal in Steam Distillation Flash Tank at Plant 12003. Operating Data for 5/23, 5/24, and 5/25/83.

Date	Sample Number	Toluene (mg/l) Influent	Toluene (mg/l) Effluent	Methylene Chloride (mg/l) Influent	Methylene Chloride (mg/l) Effluent	Tank Temp. (°C)	Overhead Temp. (°C)	Bottoms Temp. (°C)	Feed Rate (gpm)
5/23/83	1	NA[1]	1.11	NA	ND[2]	99	95	99	12
	2	NA	0.86	NA	0.10	99	98	100	14
	Composite 1 & 2	320.5	NA	7.46	NA				
5/24/83	3	NA	1.46	NA	0.134	99	99	100	18
	4	NA	0.385	NA	0.695	100	98	100	18
	Composite 3 & 4	494.0	NA	7.05	NA				
5/25/83	5	NA	2.590	NA	0.390	100	102	97	9
	6	NA	0.538	NA	0.338	101	103	100	9
	Composite 5 & 6[3]	550.0	NA	6.150	NA				

[1]NA means not analyzed.

[2]ND means not detected.

[3]2.970 mg/l of chloroform was detected in influent composite sample on 5/25/83.

Table VII-3. Toluene Removal in Steam Distillation Flash Tank at Plant 12003. Operating Data for 5/26, and 5/27/83. (Continued Page 2 of 2)

Date	Sample Number	Toluene (mg/l) Influent	Toluene (mg/l) Effluent	Methylene Chloride (mg/l) Influent	Methylene Chloride (mg/l) Effluent	Tank Temp. (°C)	Overhead Temp. (°C)	Bottoms Temp. (°C)	Feed Rate (gpm)
5/26/83	7[1,2]	635.0	229.0	31.50	1.740	94	91	95	16
	8[3]	580.0	27.2	5.10	ND[4]	96	98	99	16
5/27/83	9	NA[5]	2.79	NA	1.21	97	97	97	14
	10	NA	3.38	NA	1.59	96	97	98	14
	Composite 9 & 10[6]	4,300	NA	8.570	NA				

[1]3.15 mg/l of chloroform was detected in influent sample number 7. 1.01 mg/l of chloroform and 0.245 mg/l of benzene were detected in effluent sample number 7.

[2]Effluent concentrations under upset conditions, overhead temperature 91°C.

[3]0.975 mg/l of 1,1,1-trichloroethane, 2.85 mg/l of chloroform, and 0.915 mg/l of benzene were detected in influent sample number 8.

[4]ND means not detected.

[5]NA means not analyzed.

[6]9.20 mg/l of methyl chloride was detected in influent composite sample on 5/27/83.

Wastewaters from batch pharmaceutical processes, a vacuum pump system, and steam ejectors are accumulated in two 5,000 gallon settling tanks as shown on Figure VII-7. A connecting line maintains the liquid height at the same level in both tanks. The accumulated wastewater separates into two liquid layers - immiscible toluene and an aqueous solution of toluene and small amounts of methanol, ethanol, acetone, isopropanol, methyl ethyl ketone, diethyl ether, and other solvents listed in the footnotes of Table VII-3. The immiscible toluene flows by gravity to a spent solvent holding tank. The aqueous solution is pumped through two preheaters and enters the top of the 500 gallon flash tank through a spray nozzle. Toluene is stripped from the wastewater by steam which is injected through a sparger in the bottom of the flash tank. The overhead vapors are partially condensed and introduced to a condensate drum. The liquid condensate is recycled to the settling tanks. Uncondensed vapors from the condensate drum enter a scrubber where they are absorbed in previously uncontaminated cooling water. The scrubber water is recycled to the settling tanks and the scrubbed vapors are vented to an emissions control system.

As shown in Table VII-3, the concentration of toluene in the influent to the flash tank ranged from 320.5 mg/l to 4,300 mg/l. It is suspected that the high influent concentration of 4,300 mg/l on May 27 was caused by a low liquid level in the settling tanks. This probably resulted in a portion of the immiscible toluene being fed to the column along with the miscible solution of toluene and water. The effluent concentration of toluene ranged from 0.39 mg/l to 229.0 mg/l. The high effluent concentration of 229.0 mg/l occurred on May 26 when the tank operated under upset conditions. The temperature of the overhead vapors during the upset period was 91°C; the average temperature of the overhead vapors during the rest of the week was 99°C. The average influent and effluent concentrations for the five day period were 516 mg/l and 4.5 mg/l, respectively, excluding the upset periods. This corresponds to greater than 99 percent removal of toluene in the flash tank.

f. Data Applicability

The vapor-liquid equilibrium relationship of an organic compound in a wastewater forms the basis for determining its removability by steam stripping. The magnitude of the vapor-liquid equilibrium constant serves as a measure of the theoretical removal effectiveness.

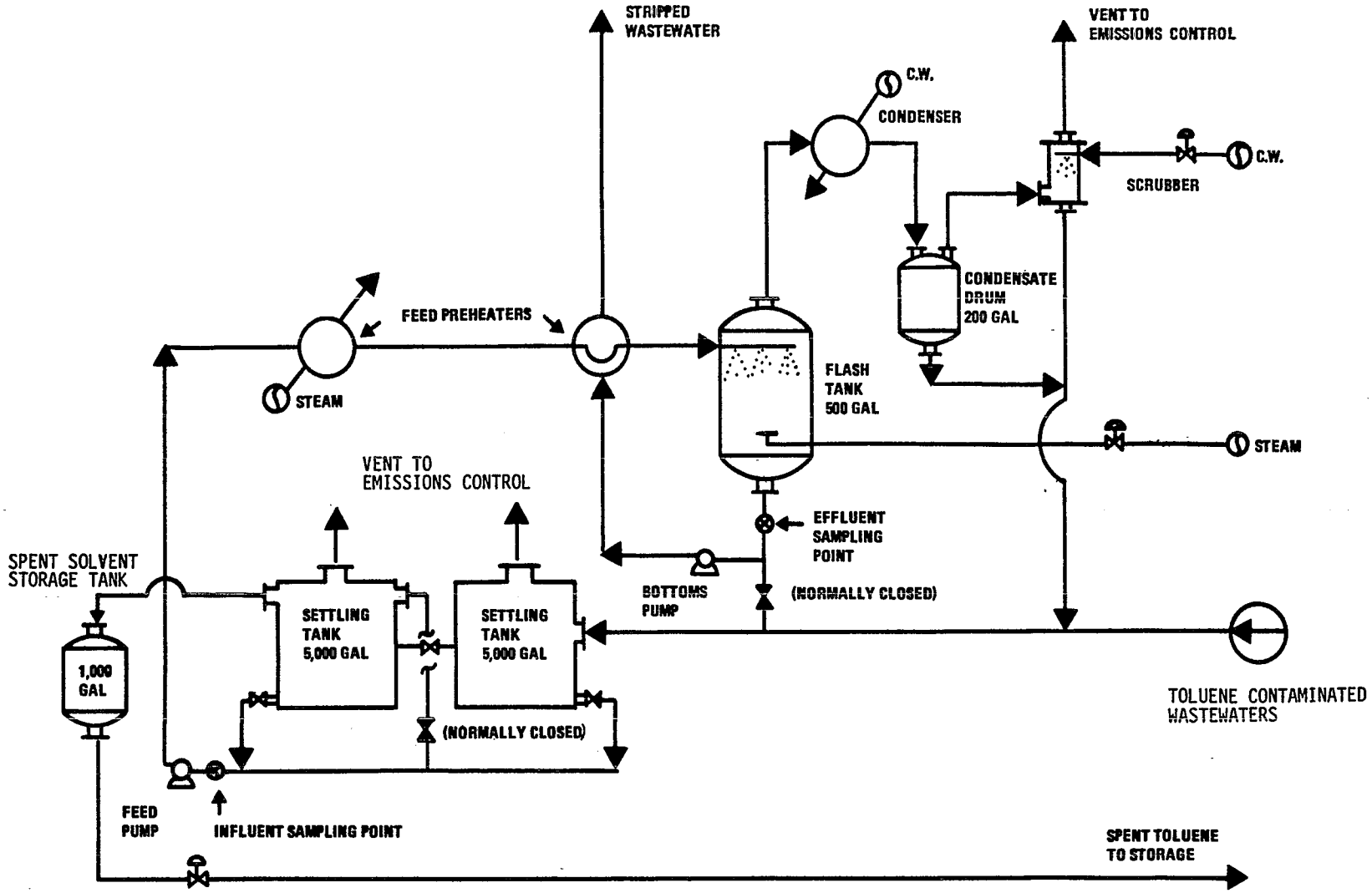

FIGURE VII - 7. STEAM DISTILLATION FLASH TANK AT PLANT 12003.

The vapor-liquid equilibrium constant, or K-value, is defined as the ratio of the equilibrium mole fraction of an organic compound in the vapor phase, y_i, to its equilibrium mole fraction in the wastewater phase, x_i

$$K_i \equiv \frac{y_i}{x_i}$$

The vapor-liquid equilibrium constant can be calculated from:

$$K_i = \gamma_i \frac{P_i^o}{P}$$

where γ_i is the activity coefficient of the organic compound i in the wastewater, P_i^o is the vapor pressure of the pure substance at the steam stripper operating temperature, and P is the total pressure. This expression, which holds for low pressures, is a simplified form of the rigorous thermodynamic equation. The vapor-liquid equilibrium constants calculated by Hwang and Fahrenthold for aqueous solutions of toluene, benzene, methylene chloride, and chloroform are listed below.(72)

Compound	Average K-Value at 100°C & 1 Atm
Toluene	1,156
Benzene	1,215
Methylene Chloride	941.4
Chloroform	635.5

The suggested limits in Section VIII for benzene are based on the performance of the steam distillation flash tank in removing toluene from pharmaceutical process wastewater at plant 12003. The suggested limits for chloroform are based on the performance of the packed column steam stripper in removing methylene chloride from pharmaceutical process wastewater at plant 12003. In both cases, the use of identical limits is justified by the above similarities between the vapor-liquid equilibrium constants.

g. Other Data Gathering

In order to determine the extent to which the wastewaters of indirect discharging pharmaceutical plants were contaminated by toxic volatile organics, the Agency sent 308 questionnaires to nine indirect discharging plants which had indicated the use of toxic volatile organics. The Agency also sent questionnaires to six other plants that had commented on the proposed pretreatment standard for total toxic volatile organics (see 47 FR 53585, Nov. 26, 1982).(141) The Agency sought information on wastewater contamination by toxic volatile organics in order to develop its plant-by-plant cost estimates for steam stripping technology. A copy of the questionnaire that was sent to the participating pharmaceutical plants may be found in the record of this rulemaking.

Responses to the questionnaire were received from 16 plants (one company response for another plant not sent a questionnaire). Five plants reported contamination of part of their process wastestream by one or more toxic volatile organics at concentrations greater than 10 mg/l. The median percentage of process wastewater contaminated by toxic volatile organics was 26 percent at the five plants. This percentage was used in development of plant-by-plant steam stripping costs which is discussed in Appendix A.

5. Carbon Adsorption

Adsorption is defined as the adhesion of dissolved molecules to the surface of solid bodies with which they are in contact. Granular activated carbon particles have two properties that make them effective and economical adsorbents. First, they have a high surface area per unit volume which results in faster, more complete adsorption. Second, they have a high hardness value which lends itself to reactivation and repeated use.

The adsorption process typically is preceded by preliminary filtration or clarification to remove insolubles. Next, the wastewaters are placed in contact with carbon so adsorption can take place. Normally, two or more beds are used so that adsorption can continue while a depleted bed is reactivated. Reactivation is accomplished by heating the carbon between 870°C to 980°C (1600°F to 1800°F) to volatize and oxidize the adsorbed contaminants. Oxygen in the furnace is normally controlled at less than 1 percent to avoid loss of carbon by combustion. Contaminants may be burned in an afterburner.

Carbon adsorption is primarily designed to remove dissolved organic material from wastewater, although it can to some extent remove chromium, mercury and cyanide. A discussion of the technical and economic feasibility of activated carbon adsorption technology may be found in "Treatability of Priority Pollutants in Wastewater by Activated Carbon," S. T. Hwang and P. Fahrenthold, U.S. EPA, 1979.

The potential use for this technology by the pharmaceutical industry is limited. Concentrations of most of the toxic pollutants (metals, volatile organics and cyanide) characteristic of pharmaceutical wastewater are generally reduced more effectively and with less cost by the previously discussed technologies or through biological treatment than by activated carbon adsorption. Phenols, the other group of pollutants found in pharmaceutical wastewaters are biodegradable and their concentrations can be reduced by improved biological treatment. Carbon adsorption is particularly applicable in situations where organic material in low concentrations not amenable to treatment by other technologies must be removed from wastewater.

The equipment necessary for an activated carbon adsorption treatment system consists of a preliminary clarification and/or filtration unit to remove the bulk of the solids, two or three columns packed with activated carbon, and pumps and piping. When on-site regeneration is employed, a furnace, quench tanks, a spent carbon tank, and a reactivated carbon tank are generally required. Contract regeneration at a central location is a frequent commercial practice.

An example of an activated carbon adsorption unit is shown in Figure VII-8.

Carbon adsorption systems are compact, will tolerate variation in influent concentrations and flow rates and can be thermally desorbed to recover the carbon for reuse. Economic application of carbon adsorption is limited to the removal of low pollutant concentrations. Competititive adsorption of non-target constituents, as well as blinding by suspended solids, can cause interference.

D. END-OF-PIPE TREATMENT

In-plant treatment processes are used to treat specific pollutants in segregated waste streams; end-of-pipe (EOP) technologies usually are designed to treat a number of pollutants in a plant's overall wastewater discharge. The types and/or stages of EOP treatment are primary treatment, biological treatment, and tertiary treatment. Depending on the nature of the pollutants to be removed and the degree of removal required, combinations of the available technologies are used.

As in the case of in-plant treatment, the 308 Portfolio data base was the principal source of information for identifying the use of EOP treatment by the pharmaceutical industry. This information was requested in both 308 Portfolio mailings. As a cross-check for accuracy and completeness, the 308 Portfolio responses were compared with information available from the other data bases.

Table VII-4 presents a summary of the EOP technologies identified by the various data bases, along with the number of plants that employ each process.

1. Primary Treatment

Primary treatment, a form of physical/chemical treatment, refers to those processes that are nonbiological in nature. Primary treatment involves (a) the screening of the influent stream to remove large solids and (b) gravity separation to remove settleable solids and floating materials. Commonly used primary treatment technologies in the pharmaceutical industry are coarse solids removal, primary sedimentation, primary chemical flocculation/clarification, and dissolved air flotation.

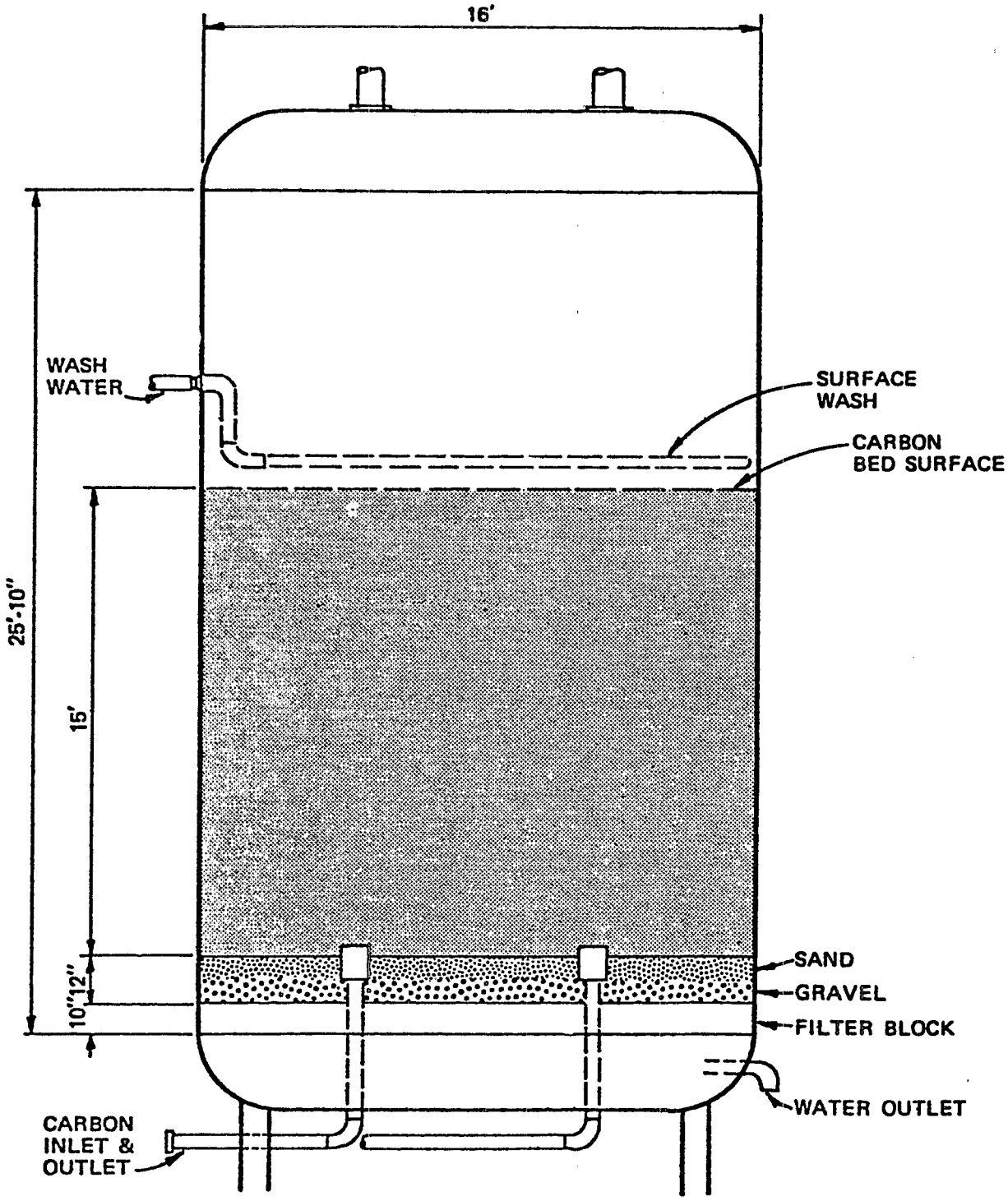

FIGURE VII-8

ACTIVATED CARBON ADSORPTION UNIT

TABLE VII-4

SUMMARY OF END-OF-PIPE TREATMENT PROCESSES
(Data Base: 308)

End-of-Pipe Technology	Number of Plants
Equalization	62
Neutralization	80
Primary Treatment	61
Coarse Settleable Solids Removal	41
Primary Sedimentation	37
Primary Chemical Flocculation/Clarification	12
Dissolved Air Flotation	3
Biological Treatment	76
Activated Sludge	52
Pure Oxygen	1
Powdered Activated Carbon	2
Trickling Filter	9
Aerated Lagoon	23
Waste Stabilization Pond	9
Rotating Biological Contactor	1
Other Biological Treatment	2
Physical/Chemical Treatment	17
Thermal Oxidation	3
Evaporation	6
Additional Treatment	40
Polishing Ponds	10
Filtration	17
Multimedia	7
Activated Carbon	4
Sand	5
Other Polishing	17
Secondary Chemical Flocculation/Clarification	5
Secondary Neutralization	5
Chlorination	11

Note: Subtotals may not add to totals because: 1) some plants employ more than one treatment process; 2) minor treatment processes were not listed separately; 3) details for some treatment processes were not available.

2. Biological and Tertiary Treatments

Biological treatment is the principal method by which many pharmaceutical manufacturing plants are now meeting existing BPT regulations. Although it is discussed as a single EOP treatment alternative, biological treatment actually encompasses a variety of specific technologies such as aerated lagoons, activated sludge, trickling filters, and rotating biological contactors. Since there are numerous publications available that describe all aspects of the operations (advantages, limitations, and other pertinent facts), discussions of these specific treatment processes will be presented in only moderate detail in this document. Although each has its own unique characteristics, they are all based on one fundamental principle: the reliance on aerobic and/or anaerobic biological microorganisms for the removal of oxygen-demanding compounds.

An aerated lagoon is one example of a treatment facility which utilizes aerobic biological processes. It is essentially a stabilization basin to which air is added either through diffusion or mechanical agitation. The air provides the oxygen required for aerobic biodegradation of the organic waste. If properly designed, the air addition will provide sufficient mixing to maintain the biological solids in suspension so that they can be removed in a secondary sedimentation tank. After settling, sludge may be recycled to the head of the lagoon to ensure the presence of a properly acclimated seed. When operated in this manner, the aerated lagoon is analogous to the activated sludge process. The viable biological solids level in an aerated lagoon is low when compared to that of an activated sludge unit. The aerated lagoon relies primarily on detention time for the breakdown and removal of organic matter; aeration periods of 3 to 8 days or more are common.

The activated sludge process is also an aerobic biological process. The basic process components include an aerated biological reactor, a clarifier for separation of biomass, and a piping arrangement to return separated biomass to the biological reactor. The aeration requirements are similar to those of an aerated lagoon in that aeration provides the necessary oxygen for aerobic biodegradation and mixing to maintain the biological solids in suspension. The available activated sludge processes that are used in the treatment of wastewaters include conventional, step-aeration, tapered-aeration, modified-aeration, contact-stabilization, complete-mix and extended-aeration.

A trickling filter is a fixed-growth biological system where a thin-film biological slime develops and coats the surfaces of the supporting medium as wastewater makes contact. The film consists primarily of bacteria, protozoa, and fungi that feed on the waste. Organic matter and dissolved oxygen are extracted and the metabolic end products are released. Although very thin, the biological slime layer is anaerobic at the bottom so hydrogen

sulfide, methane, and organic acids are generated. These materials cause the slime to periodically separate (slough off) from the supporting medium and be carried through the system with the hydraulic flow. The sloughed biomass must be removed in a clarifier.

Trickling filters are classified by hydraulic or organic loading as "low rate" or "high rate." Low-rate filters generally have a hydraulic loading rate of 1 to 4 million gal./acre/day (or an organic loading rate of 300 to 1,000 lb. BOD5/acre-ft./day), a depth of 6 to 10 feet, and no recirculation. High-rate filters have a hydraulic loading rate of 10 to 40 million gal./acre/day, an organic loading rate of 1,000 to 5,000 lb. BOD5/acre-ft./day, a depth of 3 to 10 feet, and a recirculation rate of 0.5 to 4.0. High-rate filters can be single or two stage. The medium material used in trickling filters must be strong and durable. The most suitable medium in both the low and high-rate filters is crushed stone or gravel graded to a uniform size.

The rotating biological contactor (RBC) process consists of a series of disks constructed of corrugated plastic plates and mounted on a horizontal shaft. These disks are placed in a tank with contour bottom and immersed to approximately 40 percent of the diameter. The disks rotate as wastewater passes through the tank and a fixed-film biological growth similar to that on trickling filter media adheres to the surface. Alternating exposure to the wastewater and the oxygen in the air results in biological oxidation of the organics in the wastes. Biomass sloughs off (as in the trickling filter) and is carried out in the effluent for gravity separation. Direct recirculation is not generally practiced with the rotating biological disks.

There are other biological treatment techniques not specifically mentioned in this section which utilize either aerobic or anaerobic biodegradation or both. These are stabilization ponds, anaerobic lagoons and facultative lagoons. In facultative lagoons, the bacterial reactions include both aerobic and anaerobic decomposition.

Besides the direct utilization of these treatment processes, biological treatment also encompasses two other approaches; in this report, they are referred to as biological enhancement and biological augmentation. Generally, these variations are accomplished by (a) modifications made in the conventional biological treatment itself or (b) conventional processes combined into a multi-stage system. Examples of biological enhancement are pure oxygen activated sludge and biological treatment with powdered activated carbon. Biological augmentation could be trickling filter/activated sludge, activated sludge/ rotating biological contactor, aerated lagoon/polishing pond, or any combination of two or more conventional biological treatment processes.

The differences in performance due to differences in the number of biological treatment stages employed rest on the applicability of plug-flow/back-mix effects. A true plug-flow system, such as a narrow channel lagoon, approaches equivalence to an infinity of stages if the food/microorganism (F/M) ratio is maintained. This tends to beneficially maximize the availability of nutrients, a function of the concentration of biodegradable pollutants. A fully back-mixed system (as an activated sludge unit tends to be) operates throughout at its exit concentration. It is thus a distinct, finite stage incremental with any stage before it or after it.

In practice, these distinctions are not clearcut. Since there is some back-mixing even in a channelled lagoon, separations of units or even of cells within one unit may be beneficial. Also, in most mixed systems, the concentration gradient established is sufficient for some increase in the effective nutrient concentration and, consequently, the optimum microorganism concentration.

In many systems, design factors other than the concentration-induced driving force may overshadow the concentration gradient and prevent simple performance correlation.

Comprehensive consideration of the criteria affecting bio-reaction performance suggests the following to be significant:

(1) Influent concentration of pollutants.

(2) Resistive characteristics of the BOD pollutants and the resultant K value (i.e., how easily the BOD is biodegraded).

(3) Presence of potential interfering pollutants (e.g., constituents toxic to the microorganisms).

(4) Bio-reaction characteristics and concentration of the microorganisms present.

(5) Dissolved oxygen content and distribution at least to the point of adequate O_2 availability.

(6) Sludge recycle as it may affect microorganism availability and character as represented by the F/M ratio.

(7) Contact efficiency of pollutants and microorganisms, as may be induced by agitation, flow pattern, and MLVSS.

(8) Availability and balance of nutrients, including nitrogen and phosphate.

(9) Required target effluent.

(10) Temperature (e.g., seasonal effects).

The proper design of biological systems in addition to developing optimum operating criteria, must also take into account how much of the system's potential capacity will be used so that an optimum modification approach will be available. The most economical approach may be simple adjustments of operating variables to exploit existing capacity fully. The adjustments may require such minor changes as increasing agitation, power input, or sludge recycle rate or, at the extreme, may require the addition of an independently functioning system. In many cases, the optimum upgrade may be a combination of existing component units integrated with balanced new units. This is likely to result in a system complex dictated in part by performance requirements and in part by equipment already in place.

Some examples of typical augmented biological configurations are shown in Figure VII-9.

Tertiary treatment usually means any treatment following a biological treatment system. The treatment technologies are quite varied and are normally applied for the removal of such pollutants as a specific priority pollutant class, nitrogen, color, and so forth. Some tertiary treatment processes are also applicable to in-plant or primary treatment schemes. The location in the overall treatment concept determines whether the operation is termed a tertiary treatment process.

Biological treatment systems are mainly intended to reduce the level of the traditional pollutants BOD and COD. Some priority pollutants may be removed incidentally, even though not targeted by the treatments.

Biological treatment removal efficiency is a function of treatment intensity, detention time, and such system characteristics as bioreaction rate constant, biomass concentration, and biomass contact efficiency. The configuration of the system is important since it affects these factors, but the effectiveness is not necessarily benefitted by splitting the bioreaction into a number of steps. In a plug-flow (non-backmixed) system, there is a continuation of reaction and little inherent effect of staging as in certain separation techniques and driving force systems. There may be reaction rate advantages in a back-mixed system which might accrue from staging, but these must be evaluated for a specific system considering microorganism availability, contact efficiency and other factors.

FIGURE VII-9

EXAMPLES OF AUGMENTED BIOLOGICAL SYSTEMS

Activated Sludge

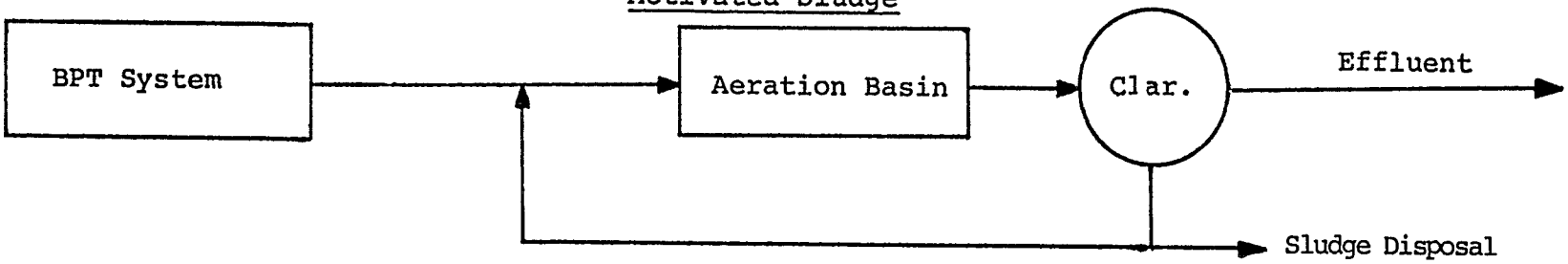

Rotating Biological Contactors

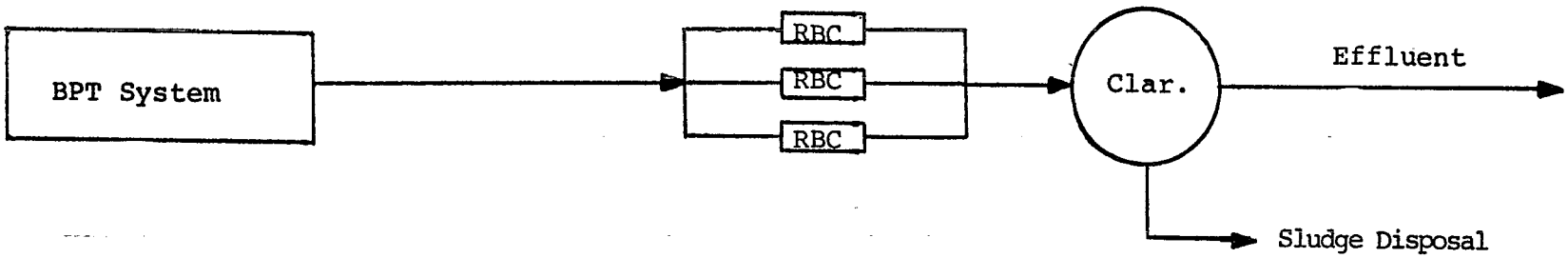

Polishing Pond

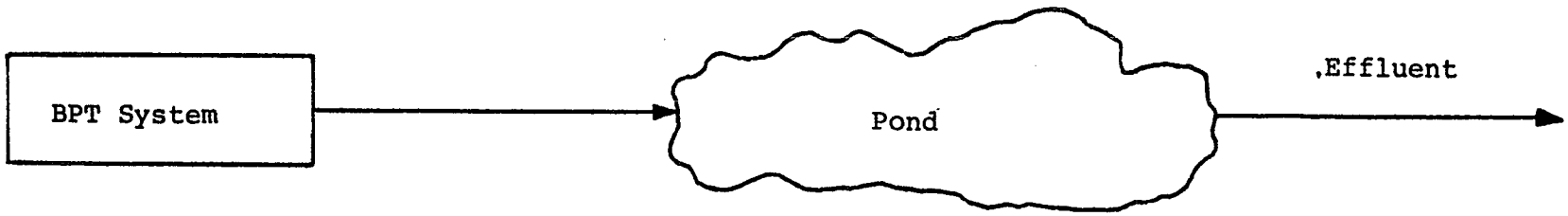

Economic concerns often dictate a design which uses (a) one biotechnique in preference to others (b) more than one technique as the reaction progresses (e.g., activated sludge and trickling filter) or (b) various arrangement configurations. However, these design choices are highly site and waste specific, and generalizations should be avoided in the comparison of systems and in the choice a particular treatment configuration.

One of the Agency's data-gathering programs requested long-term traditional pollutant data from the industry. The long-term data consisted of raw daily or weekly influent and effluent data that covered a period of about one year and were obtained from 22 plants employing some type of biological treatment. Additional long-term data was submitted after proposal by new plants and also by plants that had submitted data prior to the proposal. For purposes of predicting what the industry can achieve in the way of traditional pollutant control by biological enhancement, the long-term data represent the best available data. Summaries of the long-term data are presented in Table V-1. The data submitted by plants before and after proposal are summarized in Table IV-1. Many of these plants have achieved performance which is better than that required by the BPT regulations for BOD5, COD and TSS. These data were used to develop final BPT TSS limitations and proposed NSPS limitations for the pharmaceutical industry.

3. Solids Removal

Removal of solids from wastewater can occur at several points in the treatment sequence. Grit removal by screening, filtration, or sedimentation is often necessary as a preliminary step in primary treatment. After secondary biological treatment, it is generally necessary to complete the removal of sludge and other solids by means of clarification, filtration, or a special operation such as flotation. Further solids removal occurs in tertiary treatment stages.

a. Clarification

Clarification is a method of removing suspended or colloidal solids by means of gravity sedimentation. Since the settling rate of suspended solids is dependent on particle size and density (the smaller the particle size and the closer the density to that of water, the slower the settling rate), flocculant or coagulant aids sometimes must be added to promote bridging between particles and to render them more settleable. A slow settling rate and the stability of colloidal mixtures make chemical destabilization and agglomeration of colloidal suspensions necessary.

Clarifiers are usually large containment vessels that have a continuous water throughput. A conventional clarification system utilizes a rapid mix tank to mix chemicals with the entering

water; the wastewater is then subjected to slow agitation. Provision for the removal of settled solids is also a necessary part of the system.

Typical clarifiers are shown in Figure VII-10.

b. Filtration

Filtration is a basic solids removal technology in water and wastewater treatment. Silica sand, anthracite coal, garnet, and similar granular inert materials are among the most common media used, with gravel serving as a support material. These media may be used separately or in various combinations. Multimedia filters may be arranged in relatively distinct layers by balancing the forces of gravity, flow, and buoyancy of the individual particles. This is accomplished by selecting appropriate filter flow rates, media grain size, and media densities.

The most common filtration system is the conventional gravity filter. It normally consists of a deep bed of granular media in an open-top tank. The direction of flow through the filter is downward and the flow rate is dependent solely on the hydrostatic pressure of the water above the filter bed. Another type of filter is the pressure filter. In this case, the basic approach is the same as a gravity filter, except the tank is enclosed and pressurized.

As wastewater is processed through the filter bed, the solids collect in the spaces between the filter particles. Periodically, the filter media must be cleaned. This is accomplished by backwashing the filter (reversing the flow through the filter bed). The flow rate for backwashing is adjusted in such a way that the bed is expanded by lifting the media particles. This expansion and subsequent motion provides a scouring action which effectively dislodges the entrapped solids from the media grain surfaces. The backwash water fills the tank up to the level of a trough below the top lip of the tank wall. The backwash is collected in the trough, fed to a storage tank, and recycled into the waste treatment stream. The backwash flow is continued until the filter is clean.

An example of a filtration unit is shown in Figure VII-11.

c. Flotation

Flotation is an optional method of clarification utilized to treat some industrial waste in which the suspended solids have densities less than that of water. Air-assisted flotation may be applied to some systems with solids slightly heavier than water. As with conventional clarifiers, flocculants are frequently employed to enhance the efficiency of flotation.

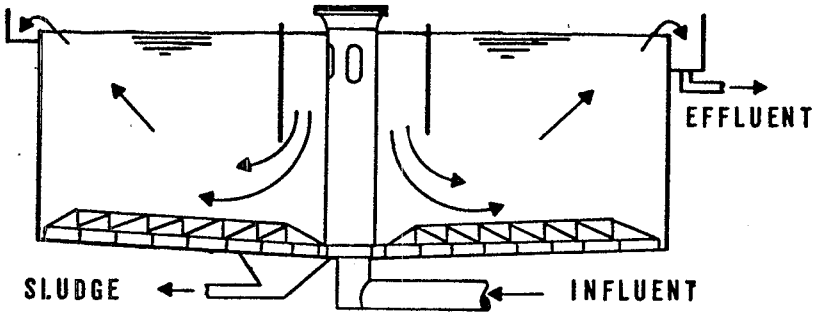

(a) CIRCULAR CENTER-FEED CLARIFIER WITH A SCRAPER SLUDGE REMOVAL SYSTEM

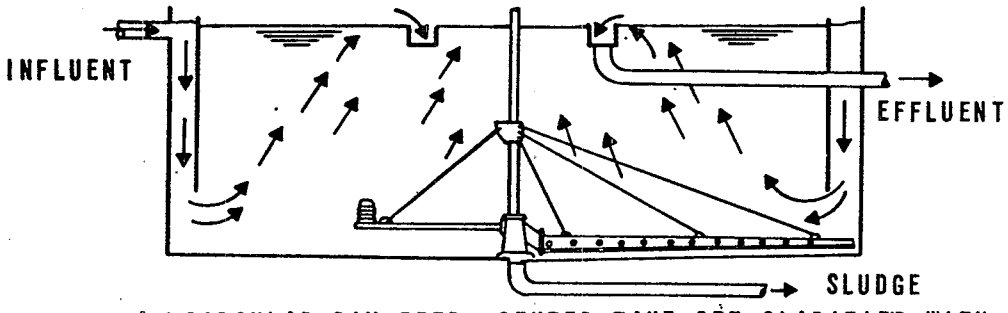

(b) CIRCULAR RIM-FEED, CENTER TAKE-OFF CLARIFIER WITH A HYDRAULIC SUCTION SLUDGE REMOVAL SYSTEM

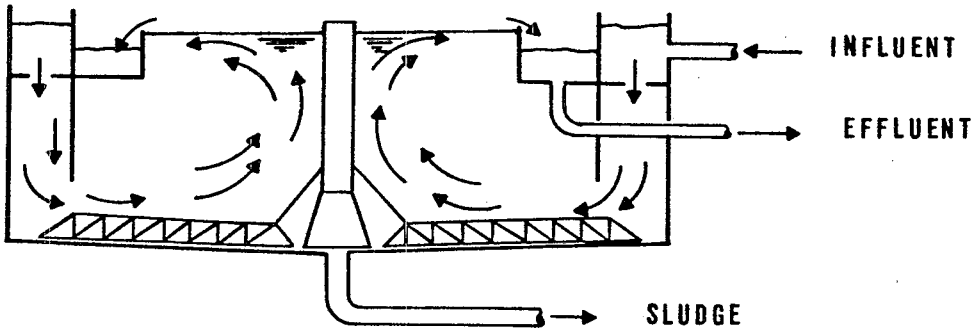

(c) CIRCULAR RIM-FEED, RIM TAKE-OFF CLARIFIER

FIGURE VII-10

TYPICAL CLARIFIER CONFIGURATIONS

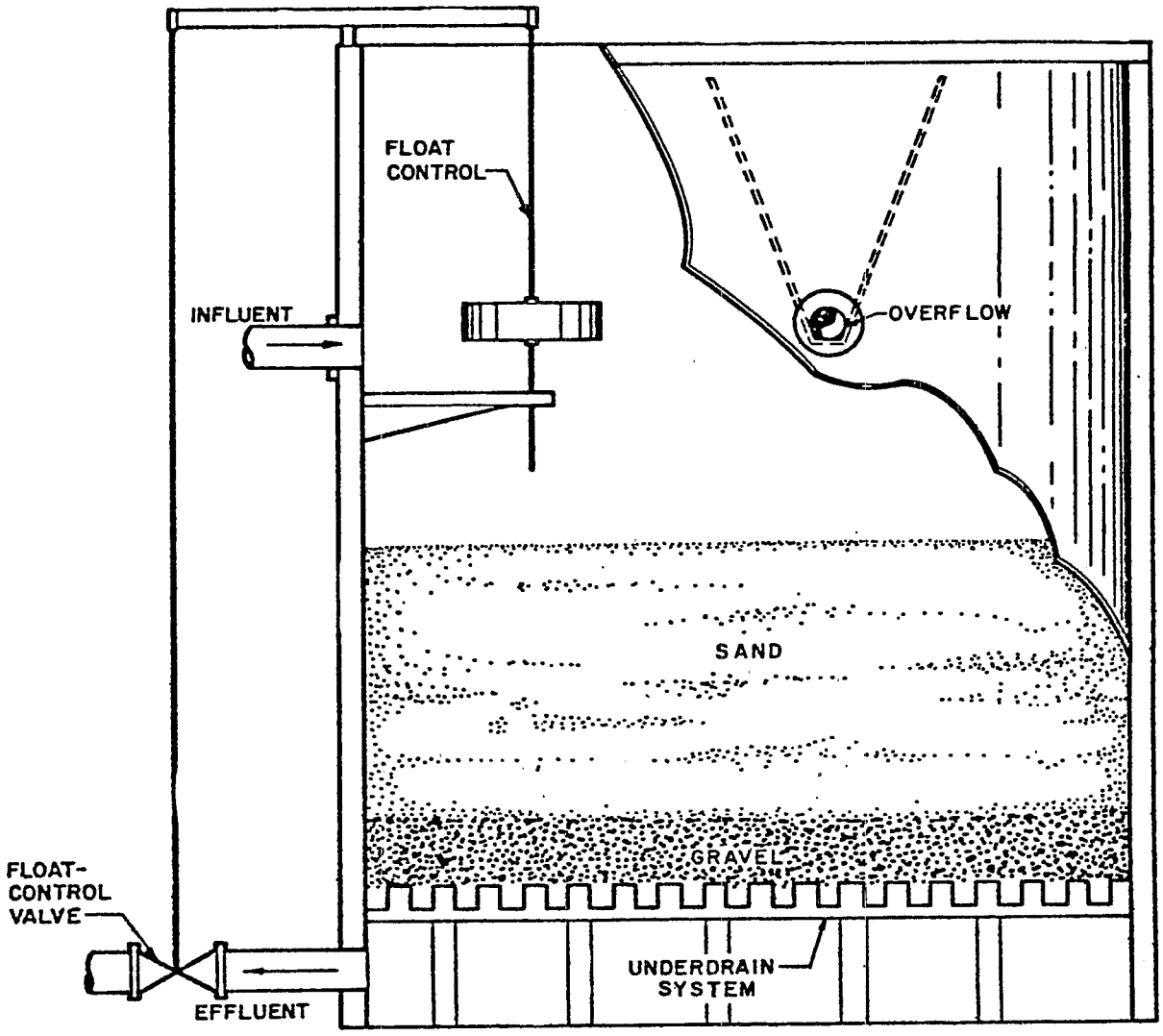

FIGURE VII-11

FILTRATION UNIT

E. ULTIMATE DISPOSAL

In any evaluation of control and treatment technologies, one of the most important considerations is the ultimate disposal methods used by the industry. Whether a plant is a direct discharger to surface waters, an indirect discharger to POTWs, or a zero discharger can be a critical factor in determining what technologies are most appropriate for controlling its waste discharge. Table VII-5 summarizes the methods used by the pharmaceutical manufacturing industry for the ultimate disposal of its process wastewaters. This table was prepared from a listing of each plant's individual disposal methods (see Appendix C).

Approximately 12 percent of the 466 manufacturing plants have direct discharges. Seven of these plants also have indirect discharges, while another nine use zero discharge methods for some of their smaller waste streams. The majority of the industry are indirect dischargers. About 59 percent of the plants in the Agency's latest data base discharge to POTWs. Seven of these plants also have direct discharges (non-process) and another 25 use zero discharge techniques for some of their smaller waste streams. Almost 29 percent of the manufacturing plants use only such zero discharge methods as contract disposal, evaporation, ocean dumping, or complete recycling or do not generate process wastewaters requiring disposal. Seventy-five percent of the zero dischargers were classified as such because they generated no process wastewaters requiring disposal.

TABLE VII-5

SUMMARY OF WASTEWATER DISCHARGES

Methods of Discharge	Number of Plants in the Industry	Number of Plants by Subcategories			
		A	B	C	D
Direct Only	42	6	4	16	27
Direct with Minor Zero Discharge	9	2	4	6	4
Total Direct Dischargers	51	8	8	22	31
Indirect Only	256	19	54	70	207
Indirect with Minor Zero Discharge	21	7	8	15	17
Total Indirect Dischargers	277	26	63	85	224
Combined Direct/Indirect Dischargers	4	1	1	2	3
SUBTOTAL	332	35	72	109	258
Zero Dischargers	134	2	9	27	114
TOTAL	466	37	81	136	372

NOTE: Subcategory counts will not equal industry totals because of multiple subcategory plants.

FATE OF WASTEWATERS AT ZERO DISCHARGE PLANTS (TOTAL INDUSTRY)

Discharge Method	Zero Dischargers	Direct w/Zero	Indirect w/Zero
No Process Wastewater	98	0	0
Contract Disposal	7	3	7
Deep Well Injection	0	1	2
Evaporation	7	1	3
Land Application	6	3	5
Ocean Dumping	2	1	2
Recycle/Reuse	2	0	1
Septic System	6	0	2
Subsurface Discharge	4	0	3
No Data	2	-	-
Total	134	9	25

SECTION VIII

ANALYSIS OF LONG TERM DATA FOR POLLUTANTS OF CONCERN

This section describes the analysis of long-term cyanide data submitted to EPA by pharmaceutical plants utilizing biological treatment systems and in-plant cyanide destruction. Also described in this section are the analyses of data obtained by the Agency as a result of its steam stripper sampling efforts and the analyses of the data used to develop final BPT TSS limitations and final BPT alternative concentration-based BOD_5 and COD limitations. The first part of this section details which plant data were used to develop the final and suggested limitations and discusses reasons for the deletion of some of the submitted data. Data verification procedures are described as well as the contents of the data base on which limitations are based. The second part of this section describes the statistical methodology used to determine appropriate daily maximum and maximum 30-day average variability factors.

A. DESCRIPTION AND TECHNICAL ANALYSIS OF DATA

The Agency used data from one facility (12236) to develop the proposed cyanide limitations and standards based on in-plant cyanide destruction and biological treatment (47 FR 53584; November 26, 1982). Included in the proposed regulations was a request for additional data on the performance of cyanide destruction systems in use by pharmaceutical manufacturing facilities. After proposal, the Agency received data on the performance of cyanide destruction systems from three plants (12135, 12235 and 12236). The discussion in this section focuses on how these data were used to derive final cyanide limitations and standards.

In the preamble to the proposed regulation, the Agency stated that, based on available information from other industries, a pretreatment standard of 1.2 mg/l for total toxic volatile organics (TTVO) might be appropriate if adequate supporting data could be obtained from the pharmaceutical industry. The technology basis for this suggested standard was in-plant steam stripping. In response to comments on this suggested standard, the Agency gathered data on the performance of a steam stripper and flash tank at plant 12003 by sampling steam stripper and flash tank influent and effluent streams. Although the Agency is not proposing or promulgating regulations based on steam stripping technology, analysis of the data obtained since proposal will be presented in this section along with suggested limitations for certain toxic volatile organics.

In November of 1982, the Agency proposed a BPT TSS limitation for all subcategories of plants based on a long-term average concentration of 75 mg/l. This limitation was derived by

averaging the effluent TSS concentrations of all plants with biological treatment in-place and was intended to replace the existing BPT TSS limitations on subcategory B, D, and E plants and to establish BPT TSS limitations for subcategories A and C for which BPT TSS limitations had not been established. In response to a comment on these proposed limitations, the Agency has evaluated the latest data on the performance of biological treatment systems with regard to TSS and concluded that the BPT TSS limitation should be related to the BPT BOD_5 limitation. The Agency also proposed alternative BPT concentration-based limitations for BOD_5 and COD for all subcategories. These limitations were proposed in order that plants with low average raw waste BOD_5 and COD concentrations would not have to comply with more stringent BPT limitations on BOD_5 and COD than the proposed BCT BOD_5 and BAT COD limitations. No comments were received on these proposed alternative concentration-based limitations. Although BCT BOD_5 and BAT COD limitations are not being finalized in this rulemaking, the Agency is finalizing BPT alternative concentration-based BOD_5 and COD for three subcategories based on its analysis of conventional and nonconventional pollutant data from facilities in these subcategories.

The data analyses performed and the results of these analyses in each of the above areas are discussed below:

1. Cyanide Destruction Data Analysis

The Agency proposed cyanide limitations based on data submitted by plant 12236. These data were gathered during the 1978-79 period and consisted of a series of daily measurements of end-of-pipe cyanide concentrations. The wastewater from the cyanide destruction system at the plant was combined with other waste streams, some of which contained small concentrations of cyanide as low as 1.0 mg/l. These combined streams were then subjected to biological treatment and the effluent from biological treatment systems was monitored for cyanide. Consequently, the concentrations used to develop the proposed limits were not a direct measure of the performance of the cyanide destruction system at this plant. Also, in its comments on the proposed regulation, this plant indicated that these data were gathered during a period when the processes which generated cyanide wastes were operating at less than normal capacity. Plant 12236 submitted new cyanide data on the effluent from cyanide destruction corresponding to the period of time of its earlier submission. This plant also submitted cyanide effluent data, both in-plant and end-of-pipe, from a later time period in which the cyanide waste generating processes were operating at normal capacity. The Agency also received similar data on the performance of cyanide destruction technology from two other plants (12235 and 12135). Plants 12235 and 12236 used the alkaline hydrolysis technique, while plant 12135 employed the alkaline chlorination technique for cyanide destruction.

After an evaluation of each data set, the Agency decided to use the recently submitted data from plants 12235 and 12236 to develop long-term average cyanide concentrations and variability factors. These data sets were chosen based on three considerations: (1) the cyanide destruction units were operated to the limit of their capacity during the period that the data were obtained, (2) the data were obtained during periods at the plant when the processes which generate cyanide bearing wastes were operating at normal capacity and (3) the submitted data directly measured the performance of cyanide destruction. After analysis of the data from plant 12135, the Agency concluded that the system at the plant was not being operated in order to achieve the effluent concentrations of cyanide that are consistent with the design specifications of the unit. The pre-proposal data submitted by plant 12236 was not used because it was obtained during periods when the cyanide waste generating processes were operating at less than normal capacity.

After deciding on which data sets to use in developing the final cyanide limitations and standards, the Agency performed a data screening analysis on individual data points from these data sets. This analysis was identical to that performed during the development of the proposed regulations. (See "Statistical Support for Pharmaceutical Rulemaking - September, 1983" for details of this analysis.) The result of this analysis was that four data points from each submission were targeted as suspect results. These points were deleted from the data sets after contact with plant personnel indicated that these observations were not consistent with the proper operation of these units. For the cyanide destruction unit data, long-term average concentrations, the number of observations and the calculated variability factors for each set of observations are presented in Table VIII-1. The calculation of the variability factors will be discussed later in this section. The long-term average of the cyanide destruction unit effluent concentrations derived from each data set (12235 and 12236) were weight-averaged according to the number of observations available in each data set to yield a long-term average performance value. Weight-averaged variability factors were also calculated in the same way. These results also appear in Table VIII-1.

The maximum 30-day average and daily maximum cyanide limitations and standards which are derived from the multiplication of the long-term weighted average performance values and the weight-averaged variability factors are found in Table VIII-2.

These limitations and standards are appropriate if monitoring for purposes of demonstrating compliance with the limitations and standards is conducted on the effluent from the cyanide control technology unit. If monitoring by direct dischargers who use biological systems to treat the effluent from cyanide destruction systems along with the remainder of the plant process wastewater is conducted after biological treatment, then a different set of

TABLE VIII-1

LONG TERM AVERAGE CYANIDE CONCENTRATIONS (LTAs) AND
VARIABILITY FACTORS (VFs)
FROM CYANIDE DESTRUCTION UNITS

Plant	LTA (mg/l)	No. of Observations	30-Day Max. Ave V.F.	Daily Max. V.F.
12235	3.28	189	2.06	7.31
12236	6.52	293	1.62	5.79

Weighted LTA = 5.25

Weighted 30-Day Maximum Average V.F. = 1.79

Weighted Daily Maximum VF = 6.39

TABLE VIII-2

30-DAY MAXIMUM AVERAGE AND DAILY MAXIMUM LIMITATIONS AND STANDARDS FOR CYANIDE*

Regulation	30-Day Maximum Average concentrations (mg/l)	Daily Maximum Concentration (mg/l)
BPT, BAT, PSES PSNS and NSPS	9.4	33.5

* These concentration limitations and standards apply to the effluent from cyanide destruction system and only if all cyanide bearing wastes are being treated by the cyanide destruction unit.

numerical limitations apply. These alternate limitations were developed by accounting for that removal of cyanide which occurs as the result of biological treatment. The Agency attempted to estimate the removal of cyanide achieved by biological treatment from the post-proposal data submitted by plant 12236. However, although daily in-plant and end-of-pipe effluent data pairs were submitted covering about nine months, no cyanide concentration data on the influent to biological treatment was available. The fact that process streams containing relatively low concentrations of cyanide were not treated by cyanide destruction but were mixed with the treated cyanide waste stream and other non-cyanide bearing waste streams prior to biological treatment prevented the Agency from determining the removal of cyanide by the biological system.

Some data were available from the S/V program on the removal of cyanide by biological treatment systems. The average percent removal of cyanide achieved by the biological treatment systems of plants in the S/V program was 70 percent. The Agency is also aware that the median cyanide removal percentage calculated from the data gathered during the Agency's 50 plant POTW study was 59 percent.(136) EPA based its estimate of the cyanide removal capability of biological treatment systems on the POTW data. The Agency believes that the pharmaceutical plants with biological treatment will achieve at least this level of removal because the biological treatment systems of direct dischargers on average have longer detention times and more aeration than do the POTWs in EPA's study. Based on this information, EPA determined alternate limitations which are appropriate when monitoring after biological treatment.

A number of factors have been considered in developing alternate cyanide limitations and standards. These include the variability in the effluent cyanide concentrations from a biological system, the removal of cyanide achieved by biological treatment and the effect of dilution by other process streams not containing cyanide. A limitation based on cyanide destruction plus biological treatment that is appropriate for direct dischargers who monitor for cyanide at the final discharge point (or end-of-pipe) was developed by first multiplying the long-term average cyanide destruction effluent concentration (5.25 mg/l) by the median biological treatment removal factor (0.41 which equals 1.00-0.59). The resulting long-term average cyanide concentration (2.15 mg/l) was then multiplied by a variability factor calculated from end-of-pipe cyanide data to yield equivalent maximum 30-day average and daily maximum concentrations which account for the cyanide reduction attainable by cyanide destruction in combination with biological treatment. (These variability factors have been developed from end-of-pipe cyanide destruction data submitted by plant 12236 and are found in Table VIII-3.) These allowable concentration limits were then multiplied by a dilution factor R which equals the ratio of the cyanide contaminated wastewater to the total process wastewater

TABLE VIII-3

30-DAY MAXIMUM AVERAGE AND DAILY MAXIMUM VARIABILITY FACTORS DERIVED FROM END-OF-PIPE DATA FROM PLANT 12236

Long Term Average CN Conc. (mg/l)	No. of Observations	30-Day Max. Ave. V.F.	Daily Maximum V.F.
0.33	293	1.53	2.73

discharge flow to yield the alternate maximum 30-day average and daily maximum end-of-pipe limitations and standards. The above calculations are presented below:

1. Equivalent Long-Term Average Cyanide Concentration

   (5.25 mg/l)(1.00-0.59) = 2.15 mg/l

2. Equivalent Limitations and Standards

   Max. 30-Day Ave. = (2.15)(1.53) R = 3.3 R mg/l
   Daily Maximum = (2.15)(2.73)R = 5.9 R mg/l

The ratios of equivalent limitations and standards to the end-of-cyanide destruction limitations and standards are (3.3)(R)/(9.4) or (0.35)(R) and (5.9)(R)/(33.4) or (0.18)(R) for the maximum 30-day average and daily maximum limitations and standards, respectively. These ratios are included in the explanation following each direct discharger regulation (BPT, BAT and NSPS) and are to be used to convert from end-of-cyanide destruction limitations and standards to alternate final effluent or end-of-pipe limitations and standards (see 48 FR 49808). Indirect dischargers who conduct end-of-pipe compliance monitoring must comply with the end-of-cyanide destruction limitations multiplied by the dilution factor R. The cyanide limitations and standards which are applicable at the alternate monitoring points for direct and indirect dischargers are listed in Table VIII-4. The following rules apply to direct dischargers concerning the alternate limitations and standards:

(1) If all cyanide-containing waste streams are diverted to a cyanide destruction unit and the effluent from the cyanide destruction unit is discharged to a biological treatment system, self-monitoring may be conducted at the final effluent discharge point in which case the alternate maximum 30-day average and daily maximum limitations cited above apply.

(2) If all cyanide-containing waste streams are not treated in a cyanide destruction unit or if the effluent from the cyanide destruction unit is not discharged to a biological treatment system, self monitoring must be conducted at the final effluent discharge point and the alternate limitations apply.

2. <u>Analysis of Steam Stripper Data</u>

The Agency analyzed forty effluent samples from a packed column steam stripper and ten effluent samples from a flash tank stripper located at plant 12003. The packed column stripper was used to steam strip methylene chloride, while the flash tank was used to steam strip toluene. The average influent concentrations treated by these strippers were 8,800 mg/l and 516 mg/l for methylene chloride and toluene, respectively. It should be noted that these influent concentrations are not equivalent to the

TABLE VIII-4

ALTERNATE CYANIDE LIMITATIONS AND STANDARDS

Regulation	Monitoring Point	30-Day Maximum Average (mg/l)	Daily Maximum (mg/l)
BPT, BAT and NSPS	A	9.4	33.5
BPT, BAT and NSPS	B	3.3 R	5.9 R
PSES and PSNS	A	9.4	33.5
PSES and PSNS	B	9.4 R	33.5 R

A = End-of-cyanide destruction unit
B = Final effluent point

actual concentrations of streams being stripped because part of the feed stream consists of recycled condensed overhead streams which are saturated with methylene chloride and toluene. Nonetheless, the average removal efficiencies of both strippers were better than 99 percent.

Along with the effluent concentration data from both strippers, the Agency also collected other operational data to determine if the effluent concentration observations were made when the unit was being operated in accordance with design specifications. These data are summarized in Tables VII-2 and VII-3. When the effluent methylene chloride concentration data were reviewed in the context of operational data collected, EPA determined that when the overhead temperature on the stripper unit was below 85°C, high effluent bottom concentrations of methylene chloride were observed. Consequently, 10 of the 40 concentrations reported in Tables VII-2 and VII-3 were not used to develop an average performance value for the steam stripping of methylene chloride. The average performance value determined for the remaining 30 observations is 6.94 mg/l, which is within the design range of the stripper. The variability factors associated with this average performance are found in Table VIII-5.

The Agency also collected steam stripping data from a flash tank used to steam strip toluene. All the data obtained (10 observations of effluent toluene concentrations) were compared with the available data on the unit operation for the same time period. The Agency determined that one observation was made while the unit was operating under upset conditions (the overhead temperature at the time the observation was made was considerably below the average overhead temperature at the time that the other observations were made). The average performance value of the flash tank steam stripper with regard to the steam stripping of toluene was 4.48 mg/l. The variability factors associated with the nine observed data points used to generate this average performance value are found in Table VIII-5.

In the preamble to the final regulation, the Agency states that four TVOs (methylene chloride, benzene, chloroform and toluene) were listed as possible candidates for regulation and that suggested limitations for controlling the discharge of these TVOs would be presented in this document. Although the Agency has only presented data (see Section VII) which describes the effluent levels that can be achieved by the application of steam stripping technology to wastewaters containing high concentrations of methylene chloride and toluene, the Agency believes that these data can be used to recommend limits for benzene and chloroform as well.

As noted in Section VII, benzene and toluene have similar vapor-liquid equilibrium constants as do methylene chloride and chloroform. Since vapor-liquid equilibrium constants determine the extent to which waste streams containing volatile components

TABLE VIII-5

Average Concentrations and Variability Factors
Derived From Steam Stripping Data

Pollutant	Average of Observations (mg/l)	No. of Observations	Variability Factors	
			30-Day Max. Average	Daily Maximum
Methylene Chloride	6.94	30	1.37	5.07
Toluene	4.48	9	1.81	9.70

can be steam stripped, the Agency believes that the application of a flash tank steam stripper to streams having high concentrations of benzene should result in effluent levels equal to those presented for toluene in Section VII. Similarly, the Agency believes that the application of a packed column steam stripper to streams containing high concentrations of chloroform should produce effluent levels equal to those obtained for methylene chloride in Section VII. Therefore, two sets of suggested TVO limits are presented in Table VIII-6; one for benzene and toluene and one for methylene chloride and chloroform.

3. Conventional Pollutant Data Analysis

a. BPT TSS Limitations

As explained previously, in November of 1982, the Agency proposed a BPT TSS limitation for all subcategories of plants based on a long-term average concentration of 75 mg/l. This limitation was intended to replace the overly stringent BPT TSS limitations on subcategory B, D and E plants and to establish BPT TSS limitations for subcategory A and C plants. The original overly stringent BPT TSS limitations were based on data from two plants whose operations were not characteristic of the entire range of operations employed at plants in the B, D, and E subcategories.

One commenter on the proposed rules stated that a single number concentration limit for TSS is not appropriate for high raw waste load plants, but may be appropriate for low raw waste load plants.

The existing BPT regulations, promulgated in 1976, are based on the application of biological treatment. They require that each pharamaceutical plant, regardless of subcategory, achieve a 90 percent reduction in BOD_5. Biological treatment systems are designed to remove BOD by converting soluble BOD into insoluble matter, TSS. The TSS generated in the biological system is removed using sedimentation technology. The amount of TSS removed is a function of the design of the clarifier or settling pond. The level of TSS entering the sedimentation system is directly related to the amount of soluble BOD removed. Because each plant has a different BOD raw waste concentration, each must remove a different amount of soluble BOD to comply with the percent reduction limitations. This leads to the generation of a different amount of TSS at each plant that must be removed in the clarifier or settling pond. A single number concentration limit for TSS is not compatible with the BPT percent reduction BOD limitations, which, in practice, vary from plant to plant over a range of 15 mg/l to almost 400 mg/l. A single number limitation would require some plants to install more advanced treatment than that technology identified as BPT. It would also mean that low raw waste load plants would be able to operate their treatment systems inefficiently and still comply with the proposed single

TABLE VIII-6

Suggested TVO Limitations

Pollutant	30-Day Maximum Average Limit (mg/l)	Daily Maximum Limit (mg/l)
Methylene Chloride	9.5	35.2
Chloroform	9.5	35.2
Toluene	8.1	43.5
Benzene	8.1	43.5

number limitation. Consequently, relating the effluent TSS concentration to either the influent or effluent BOD_5 concentration generated at each plant appears to be the most equitable and reasonable way of establishing TSS limitations based on biological treatment.

Consistent with the previous discussion, the Agency first attempted to develop a mathematical relationship between the average effluent TSS and average influent BOD_5 concentrations for plant subcategory groups (A, C and AC) and (B, D and BD) from data submitted by plants with biological treatment in-place (see Table VIII-7). Plants which had some form of effluent filtration in-place were specifically excluded from this analysis because effluent filtration was not identified as part of the BPT technology train. The Agency chose these plant groups because the subcategorization analysis (see Section IV) indicated that the influent and effluent characteristics of plants in these groups are similar. It was hypothesized that different relationships between influent BOD_5 and effluent TSS would probably be obtained for these two groups of plants. Using the data at hand, various linear and non-linear relationships were considered and estimated for each group of plants. Statistical relationships could not be established for each group of plants (that is, statistical tests did not support the existence of proposed relationships in both plant groups with a sufficient degree of confidence). More importantly, the Agency was concerned with establishing such relationships based on small numbers of pairs of average influent BOD and effluent TSS values, some of which were based on daily monitoring data, while others were simply reported averages without supporting data. Therefore, the Agency did not rely on estimated mathematical relationships between effluent TSS and influent BOD_5 for individual plant subcategories.

Since the effluent BOD_5 and TSS concentrations from a biological treatment system are related, the Agency calculated the ratios of average effluent TSS to average effluent BOD_5. These ratios appear in Table VIII-7. The mean and median ratios were calculated for four subcategory plant groups; (1) A, C and AC, (2) B, D and BD, (3) A, C and AC and B, D and BD, and (4) all plants regardless of subcategory. These mean and median ratios are found in Table VIII-8. An inspection of the data in this table shows a slight variation in the mean ratios of the four subcategory plant groups while the median ratio is 1.7 for all groups. In establishing a relationship between the BPT effluent BOD_5 concentration and the BPT effluent TSS concentration, the Agency was faced with the choice of using the mean ratios or the median ratio. The Agency chose the latter approach for two reasons. First, the median ratio is consistent with ratios of the BPT maximum 30-day average TSS and BOD_5 limitations established for related industrial categories based on biological treatment (see Table VIII-9). Secondly, the use of the median value is indicated because there is considerable disparity as

Table VIII-7

Ratios of Effluent TSS (mg/l) To Effluent BOD (mg/l)
for Biological Treatment Plants Without Effluent Filtration

PLANT CODE	Sub-category	Inf. BOD mg/l	Eff. BOD mg/l	Eff. TSS mg/l	Ratio Eff. TSS / Eff. BOD
12038	A,B,C,D	662	28.3	17.2	0.6
12119	A,D	ND	7.3	70.2	9.6
20165	B,C	123	25	16	0.6
12022	A,C	2141.6	110.2	84.9	0.8
12026	C	3670	108.1	283.7	2.6
12036	A	1570.8	33.1	78.2	2.4
12132	A,C	2898.4	66.6	452.9	6.8
12187	C	ND	707.3	60.5	0.1
12236	C	1361.6	156	108	0.7
12462	A	1765.4	117.5	582.3	5.0
33333	C	3115.2	121	212	1.8
20257	C	484	143	74	0.5
55555	C	2949	79	62	0.8
11111	C	948.8	164.5	385.0	1.7
12015	D	232.6	9.70	10.8	1.1
12089	B,D	ND	13	13	1.0
12098	D	ND	409.9	392.1	1.0
12085	D	ND	32.2	29.6	0.9
12117	B	34.5	1.94	16	8.3
12239	D	1573	284	174	0.6
12248	D	294.4	26	60.4	2.3
12283	D	ND	35	50	1.4
12287	D	ND	56	13	0.2
12298	D	ND	15	26	1.7
12307	D	ND	11.4	32.30	2.9
12459	D	69.5	3.8	16.7	4.4
12463	B,D	102.2	5.7	9.6	1.7
12471	B	50	14	59	4.2
20037	D	ND	20	47	2.4
20201	D	ND	6	14	2.3
20319	D	ND	15	8.5	0.6

TABLE VIII-8

Summary of Median and Mean Ratios of Effluent TSS to Effluent BOD_5 for Various Plant Groups

Group	Subcategories	N	Mean	Median
1	A, C, A/C	11	2.1	1.7
2	B, D, B/D	17	2.2	1.7
3	B, D, B/D, A, C, A/C	28	2.1	1.7
4	All Combinations	31	2.3	1.7

N = Numbers of Observations

TABLE VIII-9

Comparison of Ratios of BPT 30-Day
Maximum Average Limitations for TSS(mg/l) and BOD(mg/l)
Established for Related Industrial Categories Based on Biological Treatment

Industry	TSS(mg/l)	BOD_5(mg/l)	Ratio
Organic Chemicals Plastics and Synthetic Fibers*	45	37	1.2
Leather Tanning	111	76	1.5
Pulp and Paper*	110	70	1.6

*Subcategory Average

well as uncertainty with regard to the number of individual observations used to compute the data averages found in Table VIII-7. Some of the data averages are based on long-term data submissions and data submitted after the November 1982 proposal (i.e. these averages were calculated from known numbers of observations). On the other hand, the number of observations used to compute the averages found in the 308 Portfolio submissions is not known. Therefore, a weight averaging procedure utilizing the number of data points used to develop the averages was not possible. Since the use of a weight averaging procedure to determine the mean ratio was not possible and because an unweighted average provides equal weighting, the Agency chose the median ratio (1.7) to establish BPT TSS limitations for all subcategories.

Therefore, the Agency has determined that the final effluent TSS limitations which are applicable to all subcategories of plants regulated in the 1976 regulations, will state that the BPT TSS limitation applicable to a given plant will be equal to the average effluent BOD_5 concentration achieved after 90 percent reduction from the raw waste level multiplied by a factor of 1.7. This product is then multiplied by the maximum 30-day average variability factor which is 3.0 to yield the 30-day maximum average limitation. The variability factor remains unchanged from the 1976 regulation.

b. Alternative BPT BOD_5 and COD Limitations

The Agency has reviewed the available data on the performance of biological treatment systems with regard to the pollutants BOD_5 and COD in connection with the 1976 BPT limitations on the discharge of these pollutants. The Agency has determined that the biological treatment operations of subcategory B and D facilities are characterized by significant lower raw waste and effluent BOD_5 and COD concentrations than those of subcategory A and C facilities (see Section IV). Consequently, an application of the 90 percent BOD_5 and 74 percent COD reduction requirements would mean that some subcategory B and D plants would have to achieve significantly lower effluent concentrations of BOD_5 and COD than are required of most subcategory A and C plants as the result of the application of the same requirements. After reviewing the technology basis of the 1976 regulation, the Agency has determined that alternative minimum concentration-based limitations on the discharge of BOD_5 and COD are appropriate to be consistent with the technology basis of the 1976 regulation. These alternative limitations will have the practical effect of ensuring that subcategory B and D plants with low raw waste loads of BOD_5 and COD will not have to achieve inordinately low effluent concentrations of BOD_5 and COD as a result of BPT.

The alternative maximum 30-day average BPT BOD_5 limitation is obtained by multiplying the long-term average effluent BOD_5 concentration characteristic of low raw waste subcategory B and D

facilities employing biological treatment (15 mg/l) by the BPT BOD5 variability factor (3.0). The 15 mg/l average effluent concentration is also approximately equivalent to the BOD5 performance criterion for POTWs with secondary treatment. The alternative maximum 30-day average BPT COD limitation is obtained by multiplying the long-term average effluent COD concentration characteristic of low raw waste subcategory B and D facilities (100 mg/l) by the BPT COD variability factor of 2.2. The 100 mg/l average effluent concentration approximates the highest average effluent concentration reported by a subcategory B or D facility in compliance with both of the BPT percent reduction limitations (95.8 mg/l).

While the Agency has not collected post-BPT data from research only (Subcategory E) plants, the information from the 1976 BPT rulemaking indicates that the BOD5 and COD influent characteristics of subcategory E only type facilities are quite similar to those of subcategory B and D facilities. Therefore, the alternative BPT BOD5 and COD concentration-based limitations will apply to subcategory E facilities as well as to subcategory B and D facilities.

B. EFFLUENT VARIABILITY ANALYSIS

1. Introduction

The quantity of pollutants discharged from wastewater treatment systems varies daily. EPA accounts for this variability in deriving standards limiting the amount of a pollutant that may be discharged. The statistical procedures used by EPA to analyze the variability of conventional and toxic pollutant discharges from the pharmaceutical industry are described below.

2. Daily Variability Factors

The daily variability factor is defined as the ratio of the estimated 99th percentile of the distribution of daily pollutant values to the estimated mean value of the distribution. For a specific pollutant discharged from a facility, EPA estimated the mean and 99th percentile from all daily effluent values which were not deleted on the basis of being erroneous or descriptive of aberrant performance.

In developing daily variability factors, the Agency considered both parametric (e.g., normal, lognormal) and nonparametric estimation procedures. In the course of examining the various parametric approaches and the data, it became apparent that no individual parametric distributional assumption would apply to all plant/pollutant data sets. For that reason, the Agency relied on a nonparametric procedure when enough daily data were available to apply the procedure and on a 2-parameter lognormal distribution when the amount of data was not sufficient to utilize the nonparametric procedure. Nonparametric procedures do

not require satisfying assumptions on the form of the probability distribution of the underlying data. The specific nonparametric procedure has been used previously by the Agency to determine daily variability factors for other industries (e.g., BPT pesticide industry regulations). The lognormal distribution has also been used with effluent discharge data, because such data are generally skewed to a few large values and are bounded in the lower concentration range by zero. This dual approach provides a consistent methodology which minimizes the number of statistical assumptions required to analyze the data, while utilizing as much plant data as possible for the treatment technologies of interest.

The nonparametric procedure estimates the 99th percentile from a set of daily discharge measurements by determining the smallest ordered discharge value in that set of values which is greater than or equal to the population 99th percentile with probability at least 0.5. That is, for a specified value of n, determine the smallest ordered value X(j) such that:

$$P[X(j) \geq 99\text{th percentile}] = 1 - \sum_{i=j}^{n} \binom{n}{i} (.99)^{i} (.01)^{n-i} \geq .5 .$$

The smallest ordered discharge value, satisfying this criterion, was determined by nonparametric methods (see, e.g., J.D. Gibbons, Nonparametric Statistical Inference, McGraw-Hill, 1971 (86)). An estimate chosen in this manner is sometimes referred to as a 50 percent reliable estimate, or 50 percent tolerance level, for the 99th percentile and is interpreted as the value below which 99 percent of the values of a future sample of size n will fall with probability 0.5. Nonparametric tolerance estimates have a lower bound on the number of observations required to construct such an estimate. For a nonparametric tolerance estimate of the 99th percentile, a minimum sample size of 69 observations is needed in order to satisfy the specified probability criterion of at least 0.5. Therefore, the nonparametric procedure was applied only for plant/pollutant data sets with 69 or more observations. The arithmetic average of a facility's daily effluent values was used for the denominator of the nonparametric daily variability factor.

For plant/pollutant data sets with less than 69 daily observations, a 2-parameter lognormal distribution was used to estimate the 99th percentile and long-term average of the daily variability factor. The 2-parameter lognormal distribution is the probability distribution whose natural logarithm has a normal distribution, and is characterized by parameters μ and σ relative to its logarithmic distribution. If $Y_i = \ln X_i$, $i = 1, \ldots, n$, then the estimates of the parameters are $\hat{\mu} = \bar{Y}$ (sample mean of the natural logarithms), and

$$\hat{\sigma}^2 = [\sum_{i=1}^{n} (y_i - \bar{y})^2/(n-1)].$$

The daily variability factor is then calculated as

$$VF = \frac{\hat{P}_{99}}{\hat{E}(X)} = \frac{e^{\hat{\mu}+Z\hat{\sigma}}}{(e^{\hat{\mu}})\ \psi_n(.5\hat{\sigma}^2)}$$

Where Z = 2.326, the standard normal 99th percentile and

$$\psi_n(t) = 1 + (\frac{n-1}{n})t + \frac{(n-1)^3}{n^2(n+1)}\ \frac{t^2}{2!} + \ldots$$

is used to determine a minimum variance unbiased estimate of E(X).

3. Thirty-day Average Variability Factor

A 30-day average variability factor VF_{30}) is defined as the ratio of the estimated 99th percentile of the distribution of 30-day averages of daily pollutant values to the estimated long-term mean value. A 30-day average is the arithmetic mean of 30-daily measurements; the sets of measurements used in determining each monthly average are assumed to be distinct. The long-term mean is the long-term arithmetic mean of 30-day averages and is the same as the long-term mean estimated from the daily pollutant values.

The 30-day average variability factors were developed on the basis of a statistical result known as the Central Limit Theorem (CLT). The theorem states that, under general and nonrestrictive assumptions the distribution of a sum of a number of random variables, say n, is approximated by the normal distribution. The approximation improves as the number of terms in the sum increases. The CLT is quite general in that no particular distributional form is assumed for the distribution of the individual values. Thus, this approach is also nonparametric. In most applications (as in determining 30-day variability

factors), the theorem is used to approximate the distribution of the average of n observations of a random variable. The result is important because it makes it possible to compute approximate probability statements about the average in a wide range of cases. For instance, it is possible to compute a value below which a specified percentage (e.g., 95 or 99 percent) of the averages on n observations are likely to fall. Most textbooks state that 25 or 30 observations are sufficient for the approximation to be valid although in many cases 10 or 15 are adequate. In applying the CLT to the determination of 30-day limitations, EPA approximates the distribution of the average of 30 observations drawn from the distribution of daily measurements.

Various forms of this theorem exist and are applicable for different situations. A key assumption in the most familiar version of the Central Limit Theorem is that the individual measurements are independent. That is, it is assumed that measurements made on successive days, or any fixed number of days apart, are statistically independent or not related. This assumption of independence is rarely satisfied in an absolute sense in effluent data. In many cases, however, the assumption is satisfied to a degree sufficient to yield a suitable result. Because many of the facilities used to determine variability factors were known to have substantial detention periods, such effluent data can be expected to exhibit some evidence of dependency in the daily data. The Central Limit Theorem can still be used to develop 30-day average variability factors in the case of dependent data but some of the necessary calculations must be modified to account for the dependency and more samples (i.e., larger n) may be required for the approximation to be adequate. In the case of positive dependence (the usual situation with effluent data), the modification will result in a larger estimate of the variance of the mean of 30 observations than would be obtained if independence is assumed. This in turn results in a larger 30-day average variability factor than would be obtained if independence is assumed.

The technical details of adjusting the variance for the case of data dependency are presented below. As stated above, the Central Limit Theorem will still hold for dependent observations with the modification that the variance must be adjusted to reflect the dependence among individual daily measurements. The covariance between daily measurements is one way to express this dependence; the most straightforward approach to effect the necessary modification is to estimate the variance directly including all the appropriate covariance terms. The variance estimate is based on the following: Let $X_1, X_2, \ldots, X_n$ denote n random variables each with mean μ and variance σ^2. In the case of the effluent data, the X_i, $i = 1, \ldots, n$, represent n daily measurements on a particular pollutant and are assumed to have the same mean and variance. The covariance between X_i and X_j is $(\rho k)(\sigma)^2$ where $k = |i - j|$, $i \neq j$ and ρk is the correlation

between measurements k units apart. Correlation is another measure of dependence and is related to covariance. Regardless of the distribution of the X_i, the mean and variance of the average

$$\bar{X}_n = \sum_{i=1}^{n} X_i/n$$

are:

$$\text{mean}\ (\bar{X}_n) = \mu \quad \text{and}$$

$$\text{var}(\bar{X}_n) = \frac{\sigma^2}{n^2}\ [n + 2\sum_{k=1}^{n-1} (n - k)\ \rho k].$$

In the case that X_i and X_j are independent, the correlation and covariance between them are zero. Therefore, var (X_n) = $\frac{\sigma^2}{n^2}$ [n + 0] = $\frac{\sigma^2}{n}$ which is the well known expression for the variance of a mean of n independent observations.

Given a set of N measurements on the variable X, denoted by X_1, X_2, ..., X_N, the mean and variance of the average of n dependent observations of X, denoted by X_n, are estimated by

$$\hat{\mu} = \sum_{i=1}^{N} X_i/N$$

and

$$\hat{\text{Var}}(\bar{X}_n) = \frac{S^2}{n^2}\ [n + 2\sum_{k=1}^{n-1} (n - k)r_k]$$

respectively, where

$$S^2 = \sum_{i=1}^{N} \frac{(X_i - \hat{\mu})^2}{N-1}$$

and

r_k = estimate of ρk, the correlation between measurements that are k units apart (k < n)

$$= \frac{\sum_{j=1}^{N-k} (X_j - \hat{\mu})(X_{j+k} - \hat{\mu})/(N-k)^*}{\sum_{i=1}^{N} (X_i - \hat{\mu})^2/(N - 1)}$$

In order to estimate the variance of X_n, there must be a sufficient number of measurements to estimate the n - 1 correlations. In the case of an average of 30 observations, there are 29 (lag) correlations that must be estimated. Thirty-day variability factors (incorporating dependence) were estimated for a plant/pollutant data set only if two or more pairs were available to estimate each of the necessary 29 correlations. If sufficient data were not available to estimate these correlations, then the Central Limit Theorem was utilized assuming independence. Thus, the 30-day variability factor was calculated as

$$VF30 = \frac{\hat{\mu} + Z\, V(\hat{\bar{X}}_{30})^{1/2}}{\hat{\mu}}$$

, where $V(x_{30})$ was estimated[1] as described above, with Z = 2.326, the standard normal 99th percentile.

[1]See Wilks, S.S., Mathematical Statistics, Wiley & Sons, 1963, p. 552

SECTION IX

EFFLUENT REDUCTION ATTAINABLE THROUGH THE APPLICATION OF THE BEST PRACTICABLE CONTROL TECHNOLOGY CURRENTLY AVAILABLE EFFLUENT LIMITATIONS GUIDELINES

A. GENERAL

The best practicable control technology currently available (BPT) generally is based upon the average of the best existing performance, in terms of treated effluent discharged, by plants of various sizes, ages, and unit processes within an industry or subcategory. Where existing performance is uniformly inadequate, BPT may be transferred from a different subcategory or category. Limitations based on transfer of technology must be supported by a conclusion that the technology is, indeed, transferable and a reasonable prediction that it will be capable of achieving the prescribed effluent limits (see Tanners' Council of America v. Train, 540 F.2d 1188 (4th Cir. 1976)). BPT focuses on end-of-pipe treatment technology rather than process changes or internal controls except where such changes or controls are common industry practice.

BPT considers the total cost of the application of technology in relation to the effluent reduction benefits to be achieved from the technologies. The cost/benefit inquiry for BPT is a limited balancing, which does not require the Agency to quantify benefits in monetary terms (see, e.g., American Iron and Steel Institute v. EPA, 526 F.2d 1027 (3rd Cir. 1975)). In balancing costs in relation to effluent reduction benefits, EPA considers the volume and nature of existing discharges, the volume and nature of discharges after application of BPT, the general environmental effects of the pollutants, and the costs and economic impacts of the required pollution control level. The Act does not require or permit consideration of water quality problems attributable to particular point sources or industries, or water quality improvements in particular water bodies (see Weyerhaeuser Company v. Costle, 5907 F.2d 1101 (D.C. Cir. 1978)).

B. REGULATED POLLUTANTS

1. Prior Regulations

EPA promulgated interim final BPT regulations for the pharmaceutical manufacturing point source category on November 17, 1976 (41 FR 50676; 40 CFR Part 439, Subparts A-E). Pollutants regulated included BOD_5, COD, and pH for all subcategories and TSS for subcategories B, D, and E.

2. Current Regulations

In addition to the pollutants regulated under the previous rulemaking, regulated pollutants now include TSS for subcategories A and C and cyanide for subcategories A, B, C and D. EPA is also modifying TSS limitations in subcategories B, D, and E by establishing alternative minimum effluent BOD5 and COD concentrations in subcategories B, D and E.

C. IDENTIFICATION OF THE BEST PRACTICABLE CONTROL TECHNOLOGY CURRENTLY AVAILABLE

The best practicable control technology currently available for the control of BOD5, COD, pH and TSS for the pharmaceutical manufacturing point source category in BPT regulations issued in 1976 (41 FR 50676) is biological treatment. Biological treatment is also the technology basis for TSS limitations being promulgated for subcategories A and C.

Best practicable control technology for the control of cyanide is cyanide destruction and biological treatment.

D. BPT EFFLUENT LIMITATIONS

Final BPT TSS limitations which apply to all subcategories and BPT cyanide limitations which apply to subcategories A, B, C and are summarized below:

Parameter	Maximum 30-Day Average	Daily Maximum
TSS (mg/l)	1.7 times BPT BOD5 Concentration Limitation	--
Total Cyanide (mg/l)		
Alternate A	9.4	33.5
Alternate B	9.4(.35)R	33.5(.18)R

Alternate A: Measure at effluent from cyanide destruction unit. Applies only when all cyanide-bearing wastes are diverted to a cyanide destruction unit and subsequently are discharged to a biological treatment system.

Alternate B: Measure at final effluent discharge point.

"R" equals the dilution ratio of the cyanide contaminated waste streams to the total process wastewater discharge flow.

The existing BPT limitations for BOD5, COD and pH remain unchanged. However, alternative 30-day average maximum concentrations were established for BOD5 and COD for three subcategories (B, D and E). The alternative limitations were

considered appropriate following a technical analysis of the latest available data. A plant shall not be required to attain a maximum 30-day average effluent limitation of less than the equivalent of 45 mg/l for BOD5 and 220 mg/l for COD.

E. RATIONALE FOR THE SELECTION OF THE TECHNOLOGY BASIS OF BPT

Biological treatment was selected as the technology basis for BPT regulations issued in 1976 (41 FR 50676). TSS regulations established in the current rulemaking merely reflect discharge levels associated with biological treatment required to achieve BOD5 limitations and, therefore, require no new technology.

Cyanide destruction was selected as the technology basis for cyanide limitations as it is a technology currently in use in the pharmaceutical industry as well as other industries. Its use results in significant reductions in cyanide levels in pharmaceutical industry effluents.

F. METHODOLOGY USED FOR THE DEVELOPMENT OF BPT EFFLUENT LIMITATIONS

1. TSS Limitation

In November of 1982, the Agency proposed a BPT TSS limitation for all subcategories of plants based on a long-term average concentration of 75 mg/l. This limitation was intended to replace the overly stringent BPT TSS limitations for subcategory B, D, and E plants and to establish BPT TSS limitations for A and C subcategory plants. The original BPT TSS limitations for subcategories B, D and E were based on data from two plants whose operations were not characteristic of the entire range of operations employed at plants in the B, D, and E subcategories. The Agency received comments on the proposed regulation stating that a single number concentration limit for TSS is not appropriate for the pharmaceutical industry.

The existing BPT regulations, which are based on the application of biological treatment, require that each pharmaceutical plant, regardless of subcategory, achieve a 90 percent reduction in BOD5. A single number concentration limit for TSS is not consistent with the existing BPT percent reduction BOD5 limitations, which when converted to long-term average BOD5 effluent concentrations, vary from plant to plant over a wide range (e.g., from about 15 mg/l to almost 400 mg/l). A single number TSS limitation would require some plants to install more advanced treatment than that technology identified as BPT. It would also mean that low raw waste load plants would be able to operate their treatment systems inefficiently and still comply with the proposed single number limitation. After analyzing all available data, the Agency found that effluent TSS concentrations from biological treatment systems usually are greater than corresponding effluent BOD5 concentrations. EPA found that the

median ratio of effluent TSS concentrations to effluent BOD5 concentrations after biological treatment is 1.7 for both the subcategory A and C and the subcategory B and D plant groups. Consequently, the Agency is finalizing BPT TSS limitations for all five subcategories which are equal to a multiple of 1.7 times the existing BPT BOD5 limitations. Supporting data and calculation of the BOD5/TSS ratio is presented in Section VIII.

2. Cyanide Limitations

EPA estimates that about 7 to 10 percent of all pharmaceutical plants use and generate waterborne cyanide waste on a regular or intermittent basis. Cyanide destruction units are in-place in several plants. EPA requested that the pharmaceutical industry provide long-term data describing the performance of these units. Three plants provided data on the performance of cyanide control technology.

These new data measured both the performance of in-plant cyanide destruction systems directly and in combination with biological treatment. EPA is finalizing BPT and BAT effluent limitations guidelines, NSPS, PSES, and PSNS for cyanide based on data from these plants. The regulations include provisions for monitoring either in-plant after cyanide destruction or end-of-pipe. The data and calculation of cyanide limits are presented in detail in Section VIII.

3. Alternative BPT, BOD5 and COD Concentration-Based Limitations

The Agency is also promulgating alternative concentration-based BOD5 and COD BPT limitations for all subcategories. Revisions to BPT were originally proposed in November 1982 because without the proposed modification in BPT BOD5 and COD limitations, some plants would have had concentration-based BCT and BAT limitations that were less stringent than the percent reduction-based BPT limitations. This condition would have been inconsistent with the requirements of the Clean Water Act. No comments were received on these alternative limitations.

Although EPA is not yet promulgating final BCT limitations for BOD5 or BAT limitations for COD, a review of the available influent and effluent BOD5 and COD data indicate that the alternative BOD5 and COD limitations are appropriate in any case for subcategories B, D, and E. These alternative limitations establish minimum concentration levels consistent with EPA's assessment of a realistic estimate of the lowest attainable long-term average BOD5 and COD concentrations representative of the capability of the best practicable control technology currently available in treating pharmaceutical industry wastewaters. In the low raw waste load B, D, and E subcategories, percent removal limitations would, in some instances, be below that capability. Such alternative

limitations are not necessary for subcategory A or C plants because available data indicate that raw waste loads are sufficiently high at chemical synthesis and fermentation plants that percent removal limitations will not be as low as the alternative limitations established for subcategories B, D, and E. The calculation of alternate concentration-based limits is presented in Section VIII along with a discussion of the rationale for adopting them.

G. COST OF APPLICATION AND EFFLUENT REDUCTION BENEFITS

BPT regulations for cyanide and TSS are expected to require expenditures at eight plants (cyanide destruction at four plants, TSS control at five plants, with one of these plants requiring both). Total investment and annual costs are estimated to be $1.05 million and $0.41 million, respectively (1982 dollars). EPA estimates that these regulations will result in the removal of 127,000 pounds per year of cyanide from the effluent of pharmaceutical plants.

H. NONWATER QUALITY ENVIRONMENTAL IMPACTS

Sections 304(b) and 306 of the Act require EPA to consider the non-water quality environmental impacts (including energy requirements) of certain regulations. In conformance with these provisions, EPA considered the effect of these regulations on air pollution, solid waste generation, and energy consumption as summarized below.

1. Solid Waste

EPA estimates that the total solid waste generated to attain the new BPT TSS limitations will be approximately 138,000 additional pounds per year of wastewater treatment sludge. This is equal to an incremental increase of about 0.3 percent over that currently generated by the pharmaceutical industry to meet existing BPT BOD_5 limitations. The solid wastes generated through wastewater treatment at pharmaceutical plants have not been listed as hazardous in regulations promulgated by the Agency under Subtitle C of the Resource Conservation and Recovery Act (RCRA) (see 45 FR 33066; May 19, 1980). Accordingly, it does not appear likely that the wastewater sludges generated by pharmaceutical plants under the new BPT TSS limitations will be subject to the comprehensive RCRA program establishing requirements for persons handling, transporting, treating, storing, and disposing of hazardous wastes. The Agency's estimates of the costs of this regulation include the cost of handling these sludges as a non-hazardous waste.

No sludge will be generated as a result of complying with BPT effluent limitations for cyanide.

2. Air Pollution

EPA does not believe that cyanide removal will cause the generation of air pollutants; additionally, the Agency does not anticipate that compliance with the modified and new BPT TSS limitations will result in the generation of additional air pollution from pharmaceutical plants.

3. Energy Requirements

EPA estimates that the achievement of the cyanide and the new and modified TSS BPT effluent limitations will increase energy consumption by approximately 0.01 percent of present facility use for all plants.

SECTION X

BEST CONVENTIONAL POLLUTANT CONTROL TECHNOLOGY CURRENTLY AVAILABLE

A. GENERAL

The 1977 Amendments added Section 301(b)(2)(E) to the Act establishing "best conventional pollutant control technology" (BCT) for discharges of conventional pollutants from existing industrial point sources. Conventional pollutants are those defined in Section 304(a)(4) [biological oxygen demanding pollutants (BOD5), total suspended solids (TSS), fecal coliform, and pH], and any additional pollutants defined by the Administrator as "conventional" [oil and grease, 44 FR 44501, July 30, 1979].

BCT is not an additional limitation but replaces BAT for the control of conventional pollutants. In addition to other factors specified in Section 304(b)(4)(B), the Act requires that BCT limitations be assessed in light of a two part "cost-reasonableness" test (see American Paper Institute v. EPA, 660 F.2d 954 (4th Cir. 1981)). The first test compares the cost for private industry to reduce its conventional pollutants with the costs to publicly owned treatment works for similar levels of reduction in their discharge of these pollutants. The second test examines the cost-effectiveness of additional industrial treatment beyond BPT. EPA must find that limitations are "reasonable" under both tests before establishing them as BCT. In no case may BCT be less stringent than BPT.

EPA published its methodology for carrying out the BCT analysis on August 29, 1979 (44 FR 50732). EPA was later ordered by the Court of Appeals for the Fourth Circuit to correct data and methodological errors in its BCT cost test and to develop a new BCT methodology (see American Paper Institute v. EPA, 660 F.2d 954 (4th Cir. 1981)). A revised BCT methodology was proposed on October 29, 1982 (see 47 FR 49176). A final BCT methodology has not been promulgated.

Modified BPT, and BAT limitations, NSPS, PSES, and PSNS were proposed for the pharmaceutical industry on November 26, 1982. At that time, BCT effluent limitations were also proposed based on the proposed BCT methodology contained in 47 FR 49176.

As the final BCT methodology has not yet been promulgated, this document does not address BCT limitations.

SECTION XI

EFFLUENT REDUCTION ATTAINABLE THROUGH THE APPLICATION OF THE BEST AVAILABLE TECHNOLOGY ECONOMICALLY ACHIEVABLE EFFLUENT LIMITATIONS GUIDELINES

A. GENERAL

As a result of the Clean Water Act of 1977, the achievement of BAT has become the principal national means of controlling wastewater discharges of toxic pollutants. The factors considered in establishing the best available technology economically achievable (BAT) level of control include the costs of applying the control technology, the age of process equipment and facilities, the process employed, process changes, the engineering aspects of applying various types of control techniques, and non-water quality environmental considerations such as energy consumption, solid waste generation, and air pollution (Section 304(b)(2)(B)). In general, the BAT technology level represents, at a minimum, the best economically achievable performance of plants of shared characteristics. Where existing performance is uniformly inadequate, BAT technology may be transferred from a different subcategory or industrial category. BAT may include process changes or internal controls, even when not common industry practice.

The statutory assessment of BAT "considers" costs, but does not require a balancing of costs against effluent reduction benefits (see Weyerhaeuser v. Costle, 11 ERC 2149 (D.C. Cir. 1978)). However, in assessing BAT, EPA has given substantial weight to the reasonableness of costs. The Agency has considered the volume and the nature of discharges, the volume and nature of discharges expected after application of BAT, the general environmental effects of the pollutants, and the costs and economic impacts of the required pollution control levels. Despite this expanded consideration of costs, the primary determinant of BAT is effluent reduction capability using economically achievable technology.

The Agency has decided to regulate the toxic pollutant cyanide under BAT. Regulations for cyanide have been made equal to BPT. The available data on cyanide control was evaluated in terms of the cyanide generating processes and the performance of available treatment technology employed by direct discharging pharmaceutical plants. EPA was unable to identify levels of cyanide control that are more stringent than that which will occur after application of cyanide destruction technology in combination with biological treatment. The identification of the technology basis for cyanide control, rationale for its selection and effluent reduction benefits are presented in more detail in Section IX.

The Agency at this time is not promulgating BAT limitations for the nonconventional pollutant COD. Additional information on the identity of the pollutants that contribute to COD and on applicable COD removal technologies is required before EPA can evaluate COD control options. Therefore, the Agency is postponing a final decision on appropriate BAT limitations for the nonconventional pollutant COD until a later date. The Agency is continuing its investigation of appropriate COD removal technologies and their costs.

B. BAT EFFLUENT LIMITATIONS

Final BAT limitations which apply to subcategories A, B, C and D are summarized below:

Parameter	Maximum 30-Day Average	Daily Maximum
Total Cyanide		
Alternate A	9.4	33.5
Alternate B	9.4(.35)R	33.5(.18)R
COD	(Reserved)	

Alternate A: Measure at effluent from cyanide destruction unit. Applies only when all cyanide-bearing wastes are diverted to a cyanide destruction unit and subsequently are discharged. to a biological treatment system.

Alternate B: Measure at final effluent discharge point.

"R" equals the dilution ratio of the cyanide contaminated waste streams to the total process wastewater discharge flow.

BAT COD limitations are being reserved for promulgation at a later date. Additional information on the identity of pollutants that contribute to COD and applicable COD removal technologies is required before EPA can fully evaluate COD control options.

SECTION XII

NEW SOURCE PERFORMANCE STANDARDS

A. GENERAL

New source performance standards (NSPS) are established under Section 306 of the Act and are based on the best available demonstrated technology. New plants have the opportunity to design the best and most efficient manufacturing and wastewater treatment technologies. Therefore, Congress directed EPA to consider the best demonstrated process changes, in-plant controls, and end-of-process treatment technologies that reduce pollution to the maximum extent feasible. As a result, limitations for NSPS should represent the most stringent numerical values attainable through the application of demonstrated control technology for all pollutants (conventional, nonconventional, and toxic).

The only pollutants regulated under NSPS at this time are the toxic pollutant cyanide and the conventional pollutant pH. NSPS for the conventional pollutants BOD_5 and TSS are being proposed in a separate rulemaking. Regulations for the control of the nonconventional pollutant COD are being deferred at this time.

NSPS for cyanide are being promulgated equal to BPT and BAT effluent limitations. There are no data available that indicate that further levels of cyanide control can be achieved by new sources. The technology basis, the rationale for its selection and the methodology for development of limitations are discussed in Sections VIII and IX of this document. NSPS requirements for pH are established equal to those for BPT and, therefore, will have no resulting cost or impacts. A discussion of pH can be found in the Development Document for Interim Final Effluent Limitations Guidelines and Proposed New Source Performance Standards for the Pharmaceutical Manufacturing Point Source Category (U.S. EPA, December 1976).

B. NSPS

Final NSPS which apply to subcategories A, B, C and D are summarized below:

Parameter	Maximum 30-Day Average	Daily Maximum
Total Cyanide		
Alternate A	9.4	33.5
Alternate B	9.4(.35)R	33.5(.18)R

Alternate A: Measure at effluent from cyanide destruction unit. Applies only when all cyanide-bearing wastes are diverted to a cyanide destruction unit and subsequently are discharged to a biological treatment system.

Alternate B: Measure at final effluent discharge point.

"R" equals the dilution ratio of the cyanide contaminated waste streams to the total process wastewater discharge flow.

NSPS COD limitations are being reserved for promulgation at a later date. Additional information on the identity of pollutants that contribute to COD and applicable COD removal technologies is required before EPA can fully evaluate COD control options.

NSPS BOD_5 and TSS limitations are being proposed concurrently with promulgation of these final regulations. A detailed discussion of the proposed limitations is contained in Proposed Development Document for Effluent Limitations Guidelines and Standards for the Pharmaceutical Manufacturing Point Source Category (U.S. EPA, September 1983).

SECTION XIII

PRETREATMENT STANDARDS FOR NEW AND EXISTING SOURCES

A. GENERAL

Section 307(b) of the Act requires EPA to promulgate pretreatment standards for existing sources (PSES) that must be achieved within three years of promulgation. PSES are designed to control the discharge of pollutants that pass through, interfere with, or are otherwise incompatible with the operation of POTWs. The Clean Water Act of 1977 requires pretreatment for toxic pollutants that pass through the POTW in amounts that would violate direct discharger effluent limitations or interfere with the POTW's treatment process or chosen sludge disposal method. The legislative history of the 1977 Act indicates that pretreatment standards are to be technology-based, analogous to the best available technology for removal of toxic pollutants. EPA has generally determined that there is pass through of pollutants if the percent of pollutants removed by a well-operated POTW achieving secondary treatment is less than the percent removed by the BAT model treatment system. The general pretreatment regulations, which served as the framework for the categorical pretreatment regulations for the pharmaceuticals industry can be found at 40 CFR Part 403 (43 FR 27736, June 26, 1978; 46 FR 9462, January 28, 1981).

Section 307(c) of the Clean Water Act of 1977 requires EPA to promulgate pretreatment standards for new sources (PSNS) at the same time that it promulgates NSPS. New indirect dischargers, like new direct dischargers, have the opportunity to incorporate the best available demonstrated technologies including process changes, in-plant control measures, and end-of-pipe treatment and to use plant site selection to ensure adequate treatment system installation. Pretreatment standards for new sources (PSNS), like PSES are to control the discharge of pollutants that pass through, interfere with, or are otherwise incompatible with the operation of POTWs. The Agency considers the same factors in promulgating PSNS as it considers in promulgating PSES.

The only pollutant regulated under PSNS and PSES is the toxic pollutant cyanide. PSES and PSNS are presented below. The technology basis for pretreatment standards as for BPT is cyanide destruction. The rationale for the selection of that technology and the methodology for the development of effluent limitations is discussed in Sections VIII and IX.

At proposal, the Agency stated it was considering establishing pretreatment standards to control TVO discharges because available data indicated that pass through of TVOs occurs at POTWs. A standard of 1.2 mg/l for total toxic volatile organics was suggested in the preamble to the proposed rules, pending the

availability of adequate supporting data on the performance of steam stripping technology.

One POTW and one State Agency commented that pretreatment standards controlling TVOs should be promulgated. Industry commenters questioned the need for TVO pretreatment standards in view of the low concentrations of toxic volatile organics in POTW effluents. They also questioned the achievability of a 1.2 mg/l discharge level with steam stripping technology.

In the proposed regulation, 17 TVOs were listed as possible candidates for regulation by pretreatment standards. After reexamining all of the available data, EPA concluded that, with the exception of methylene chloride and chloroform, these pollutants should be excluded from regulation by the provisions of paragraph 8 of the Settlement Agreement. Thirteen of these pollutants have been excluded because their amount and toxicity, taken together, are so insignificant as not to justify developing uniformly applicable pretreatment regulations (see Section VI). Of the remaining four, there are two (benzene and toluene) which, while not as insignificant, nonetheless are unlikely to pass through POTWs.

To address the issue of pass through, EPA studied 50 well-operated POTWs that use biological treatment to determine the extent to which priority pollutants are reduced by such POTWs. In the case of benzene and toluene, the data indicate that direct discharger median percent reductions exceed POTW median percent reductions by less than 5 percent (100 percent for direct dischargers versus 99 percent for benzene and 97 percent for toluene at POTWs). In light of the fact that EPA had less data in the POTW studies on benzene and toluene than it had for some other pollutants and in light of the variability in analyzing samples for organic priority pollutants at the concentrations typically found in end-of-pipe biological systems at POTWs and pharmaceutical plants, EPA believes that differences of 5 percent or less between the direct discharger and POTW data for benzene and toluene are unlikely to reflect real differences in treatment efficiency. Therefore, EPA has determined that benzene and toluene do not pass through POTWs.

However, a potential interference problem could exist for these two toxic volatile organics because of a potential fire/explosion hazard. Benzene and toluene water mixtures have low flash points. Relatively small concentrations of these solvents in water mixtures (about 180 mg/l) can cause spontaneous combustion in the vapor space above the water mixture under certain conditions. The Agency's latest information indicates that fire/explosions, while not impossible, are unlikely. Benzene and toluene levels above the minimum concentrations required to cause combustion have not been reported in discharges from plants in the pharmaceutical industry. Because pass through does not occur and interference is unlikely, there is no basis for establishing

nationally applicable categorical pretreatment standards for benzene or toluene. However, under the general pretreatment regulation, 40 CFR §403.5, an individual POTW may establish pretreatment standards if benzene and toluene discharges from pharmaceutical users result in interference. Section VIII of the Development Document contains suggested pretreatment standards for benzene and toluene, based on steam stripping, for consideration by POTWs establishing standards under §403.5.

At direct discharging pharmaceutical manufacturing plants, chloroform is reduced to levels that are below its treatability through volatilization in biological treatment systems. Therefore, EPA excluded chloroform from BAT regulations under the provisions of paragraph 8(a)(iii) of the Settlement Agreement. As for indirect dischargers, the Agency found that POTWs to which high concentrations of chloroform are discharged achieve high chloroform removal (greater than 95 percent). Therefore, POTWs receiving high concentrations of chloroform as a result of pharmaceutical discharges are unlikely to experience pass through. For the above reasons, EPA decided not to establish pretreatment standards controlling chloroform from indirect discharging pharmaceutical plants. Suggested chloroform standards may be found in Section VIII and may be used by municipalities in developing pretreatment standards on a case-by-case basis where necessary.

EPA also considered the effect that other toxic pollutants, which were found in significant concentrations in the wastewater of pharmaceutical plants, would have on the operation of POTWs. One group of pollutants, phenol and the various phenol type pollutants, is adequately biodegraded by the biological treatment systems of direct dischargers and the evidence available from the 40-plant POTW study (117) indicates that the concentrations of these pollutants as discharged by pharmaceutical plants can be adequately reduced by the secondary treatment works of POTWs. The concentrations of toxic metals discharged by indirect discharging pharmaceutical plants are low enough that no pass-through or interference problems result from this discharge at POTWs. Therefore, no pretreatment standards are required to control the discharge of toxic metals, phenol and phenol related pollutants from pharmaceutical plants.

Through this process, the Agency determined that only methylene chloride was a candidate for national PSES and PSNS regulations. The Agency found that the installation and operation of steam strippers to reduce methylene chloride discharges to POTWs by pharmaceutical plants would result in costs that are not insignificant. The Agency estimates that 25 indirect discharging plants would incur capital and total annual costs of $0.748 million and $0.768 million (1982 dollars), respectively, per plant. EPA projects that one indirect discharging pharmaceutical plant would close if required to install steam stripping technology. Steam strippers are also equally energy intensive at

indirect discharging plants as at direct dischargers. The Agency estimates that the operation of steam strippers at the 25 plants would increase energy usage by the equivalent of 315,000 barrels of oil per year. For these reasons and because EPA concluded that regulation of methylene chloride at direct dischargers is inappropriate, the Agency decided not to establish categorical PSES and PSNS for methylene chloride.

Data on the capabilities of steam stripping technology to reduce the discharge of methylene chloride and on the cost of installing and operating steam strippers to control toxic volatile organics is presented in Section VII and Appendix A of this document. This information may be used by municipalities in developing pretreatment standards for methylene chloride on a case-by-case basis where necessary.

B. PSES and PSNS

Final PSES and PSNS which apply to subcategories A, B, C and D are summarized below:

	PSES and PSNS	
Parameter	30-Day Maximum Average	Daily Maximum
Total cyanide		
Alternate A	9.4	33.5
Alternate B	9.4R	33.5R

Alternate A: Measured at effluent from cyanide destruction unit before dilution with other streams. Applicable only if all cyanide-containing wastes streams are diverted to the cyanide destruction unit.

Alternate B: Measured at final effluent discharge point.

"R" equals the dilution ratio of the cyanide contaminated waste stream to the total process wastewater flow.

C. COST OF APPLICATION AND EFFLUENT REDUCTION BENEFITS

Only one out of the 277 indirect discharging plants is expected to incur costs; the estimated capital and annual costs are $0.42 million and $0.26 million, respectively (1982 dollars). PSES for cyanide will result in the removal of 148,000 pounds of cyanide per year from the nation's waters.

Regulations for indirect discharging new sources (PSNS) are the same as those for existing sources. Therefore, no incremental impacts are expected from implementation of PSNS. Since PSNS is

equal to PSES, it will result in no additional incremental removal.

D. NONWATER QUALITY ENVIRONMENTAL IMPACTS

Cyanide PSES and PSNS limitations will result in no additional solid waste generation or discharge of air pollutants. EPA estimates that compliance with PSES to control cyanide discharges to POTWs will increase overall energy use by 0.07 percent at the affected indirect discharging pharmaceutical plant. Because PSNS are identical to PSES, there will be no incremental energy usage resulting from compliance with PSNS.

SECTION XIV

REFERENCES

1. Anderson, Dewey R., et al., "Pharmaceutical Wastewater: Characteristics and Treatment," Industrial Wastes, March/April 1971, pp. 2-6.

2. APHA Project Staff, Factbook '76, Prescription Drug Industry, Pharmaceutical Manufacturers Association, 1976.

3. APHA Project Staff, Handbook of Nonprescroption Drugs, American Pharmaceutical Association, Washington, D.C., 1977.

4. Breaz, Emil, "Drug Firm Cuts Sludge Handling Costs," Water and Wastes Engineering, January 1972, pp. 22-23.

5. Burns and Roe submittal to the U.S. EPA, "Burns and Roe Review of TRC Data Base," May 8,1978, revised June 7, 1978 .

6. Burns and Roe submittal to the U.S. EPA, "Preliminary Profile," February 15, 1978.

7. Burns and Roe submittal to the U.S. EPA, "Profile Report No. 2, 308 Portfolio, Subcategory A Report," June 2, 1978.

8. Burns and Roe submittal to the U.S. EPA, "Profile Report No. 3, Industry Population," June 22, 1978.

9. Burns and Roe submittal to the U.S. EPA, "Profile Report No. 4, Fate of Industry Wastewater," August 18,1978.

10. Burns and Roe submittal to the U.S. EPA, "Profile Report No. 5, Treatment Technology," September 8, 1978.

11. Burns and Roe submittal to the U.S. EPA, "Profile Report No. 6A, Production Data by Plant Site," August 30, 1978.

12. Burns and Roe submittal to the U.S. EPA, "Summary Report No. 1, Pharmaceutical Manufacturing Data Base Acquisition," February 14, 1978.

13. Burns and Roe submittal to the U.S. EPA, "Summary Report No. 1A, 308 Portfolio Development, Pharmaceutical Manufacturing," May, 1978.

14. Burns and Roe submittal to the U.S. EPA, "Summary Report No.2, 308 Portfolio Computerization, Phase I, Pharmaceutical Manufacturing," February 24, 1978.

15. Burns and Roe submittal to the U.S. EPA, "Summary Report No. 3, Industrial Subcategorization, Review of Alternatives," February 14, 1978.

16. Burns and Roe submittal to the U.S. EPA, "Summary Report No. 4, Pharmaceutical Manufacturing Point Source Category Definition," February 14, 1978.

17. Burns and Roe submittal to the U.S. EPA, "Summary Report No. 5, 308 Portfolio Computerization, Phase II, Pharmaceutical Manufacturing," April 21, 1978.

18. Burns and Roe submittal to the U.S. EPA, "Screening Plants Coverage of Pharmaceutical Products," letter transmitted, December 12, 1978.

19. Burns and Roe submittal to the U.S. EPA, "308 Treatment Plant Performance Data," letter report dated December 11, 1978.

20. Burns and Roe submittal to the U.S. EPA, "Profile Report No. 1A," June 15, 1978.

21. Crame, Leonard W., "Activated Sludge Enhancement: A Viable Alternative to Tertiary Carbon Adsorption," Proceedings of the Open Forum on Management of Petroleum Refinery Wastewater, June 6-9, 1977.

22. Dlouhy, P.E. and Dahlstrom, D.A., "Continuous Filtration in Pharmaceutical Production," Chemical Engineering Progress, Vol. 64, No. 4, April 1968, pp. 116-121.

23. Dunphy, Joseph F. and Hall, Alan, "Waste Disposal: Settling on Safer Solution for Chemicals," Chemical Week, March 8, 1978, pp. 28-32

24. Echelberger, Wayne F., Jr., "Treatability Investigations for Pharmaceutical Manufacturing Wastes," presented at the ASCE National Environmental Engineering Conference, Vanderbilt University, July 13-15, 1977.

25. Federal Register, Vol. 41, No.31 - Friday, February 13, 1976, pp. 6878-6894.

26. Federal Register, Vol. 41, No. 106 - Tuesday, June 1, 1976, pp. 22202-22219.

27. Federal Register, Vol.41, No. 223 - Wednesday, November 17, 1976, pp. 50676-50686.

28. Federal Register, Vol. 42, No. 20 - Monday, January 31, 1977 pp. 5697.

29. Federal Register, Vol. 42, No. 24 - Friday, February 4, 1977, pp. 6813-6814.

30. Federal Register, Vol. 42, No. 148, - Tuesday, August 2, 1977, pp. 39182-39193.

31. Federal Register, Vol. 42, No. 191, - Monday, October 3, 1977, pp. 53804-53820.

32. Fox, Jeffrey L., "Ames Test Success Paves Way for Short-Term Cancer Testing," Chemical and Engineering News, December 12, 1977, pp. 34-46.

33. Grieves, C.G., et al., "Powdered Carbon Improves Activated Sludge Treatment," Environmental Management, October 1977, pp. 125-130.

34. Humphrey, Arthur E., "Current Developments in Fermentation," Chemical Engineering, December 9, 1974, pp. 98-112.

35. Lawson, C.T., and Hovious, J.L., "Realistic Performance Criteria for Activated Carbon Treatment of Wastewaters from the Manufacture of Organic Chemicals and Plastics," Union Carbide Corporation, February 14,1977.

36. Lund, Herbert F., Industrial Pollution Control Handbook, McGraw-Hill, 1971.

37. Marek, Anton C., Jr., and Askins, William, "Advanced Wastewater Treatment for an Organic Chemicals Manufacturing Complex," U.S./U.S.S.R. Symposium on Physical/Chemical Treatment, November 12-14, 1975.

38. Mohanrao, G.J., et al., "Waste Treatment at a Synthetic Drug Factory in India," Journal Water Pollution Control Federation, Vol. 42, No. 8, Part 1, August 1970, pp. 1530-1543.

40. Natural Resources Defense Council, et al., v. Train, 8 E.R.C. 2120 (D.D.C. 1976).

41. PEDCo Environmental submittal to the U.S. EPA, "The Presence of Priority Pollutants in the Extractive Manufacture of Pharmaceuticals," October 1978.

42. PEDCo Environmental submittal to the U.S. EPA, "The Presence of Priority Pollutant Materials in the Fermentation Manufacture of Pharmaceuticals," no date.

43. PEDCo Environmental submittal to the U.S. EPA, "The Presence of Priority Pollutants in the Synthetic Manufacture of Pharmaceuticals," March 1979.

44. Shumaker, Thomas P., "Carbon Treatment of Complex Organic Wastewaters," presented at Manufacturing Chemists Association, Carbon Adsorption Workshop, November 16, 1977.

45. Stracke, R.J., and Bauman, E.R., "Biological Treatment of a Toxic Industrial Waste - Performance of an Activated Sludge and Trickling Filter Plant: Salisbury Laboratories," 1976.

46. Struzeski, E.J., Jr., "Waste Treatment in the Pharmaceuticals Industry/Part 1," Industrial Wastes, July/August 1976, pp. 17-21. pp. 17-21.

47. Struzeski, E.J., Jr., "Waste Treatment in the Pharmaceuticals Industry/Part 2," Industrial Wastes, September/October 1976, pp. 40-43.

48. Stumpf, Mark R., "Pollution Control at Abbott", Industrial Wastes, July/August 1973, pp. 20-26.

49. "Super Bugs Rescue Waste Plants," Chemical Week, November 30, 1977, p. 47 (unauthored).

50. The Directory of Chemical Producers - U.S.A., Medicinals, Stanford Research Institute, Menlo Park, CA., 1977.

51. The Executive Directory of U.S. Pharmaceutical Industry, Third Edition, Chemical Economics Services, Princeton, NJ.

52. U.S. EPA, "Assessment of the Environmental Effect of the Pharmaceutical Industry," Contract No. 68-03-2510, December 1978.

53. U.S. EPA, "Characterization of Wastewaters from the Ethical Pharmaceutical Industry," Report No. 670/2-74-057, July 1974.

54. U.S. EPA, "Control Techniques for Volatile Organic Emissions from Stationary Sources," Contract No. 68-02-2608, Task 12, September, 1977.

55. U.S. EPA, "Development Document for Interim Final Effluent Limitations Guidelines and Proposed New Source Performance Standards for the Pharmaceutical Manufacturing Point Source Category," Report No. 440/1-75/060, December 1976.

56. U.S. EPA, "Development Document for Proposed Existing Source Pretreatment Standards for the Electroplating Point Source Category," Report No. 440/1-78/085, February 1978.

57. U.S. EPA, Draft of "Pretreatment Standards for Ammonia, Phenols, and Cyanides", Contract No. 68-01-3289, March 1976.

58. U.S. EPA, "Pharmaceutical Industry: Hazardous Waste Generation, Treatment, and Disposal," Report No. SW-508, 1976.

59. U.S. EPA, "Preliminary Evaluation of Sources and Control of the Wastewater Discharges of Three High Volume Pharmaceutical Production Processes," Contract No. 68-03-2870, November 1977.

60. U.S. EPA, "Sampling and Analysis Procedures for Screening of Industrial Effluents for Priority Pollutants," April 1977.

61. U.S. EPA, "Waste Treatment and Disposal Methods for the Pharmaceutical Industry," Report No. 330/1-75-001, February 1975.

62. Willey, William J., and Vinnecombe, Anne T., Industrial Microbiology, McGraw-Hill, 1976.

63. Windholz, Martha, The Merck Index, 9th Edition, Merck and Co., Rahway, NJ, 1976.

64. Wu, Yeun C. and Kao, Chiao F., "Activated Sludge Treatment of Yeast Industry Wastewater," Journal Water Pollution Control Federation, Vol. 48, No. 11, November 1976, pp. 2609-2618.

65. DeWalle, F.B., et al., "Organic Matter Removal by Powdered Activated Carbon Added to Activated Sludge," Journal Water Pollution Control Federation, April 1977.

66. Grieves, C.G., et al., "Powdered Activated Carbon Enhancement of Activated Sludge for BATEA Refinery Wastewater Treatment," Proceedings of the Open Forum on Management of Petroleum Refinery Wastewater, June 6-9, 1977.

67. Grulich, G., et al., "Treatment of Organic Chemicals Plant Wastewater with DuPont PACT Process," presented at AICHE Meeting, February 1972.

68. Heath, H.W., Jr., "Combined Powdered Activated Carbon - Biological ("PACT") Treatment of 40 MGD Industrial Waste," presented to Symposium on Industrial Waste Pollution Control at ACS National Meeting, March 24, 1977.

69. Hutton, D.C., and Robertaccio, F.L., U.S. Patent 3,904,518, September 9, 1975.

70. U.S. EPA, "Control of Volatile Organic Emissions from the Manufacture of Synthesized Pharmaceutical Products," Report No. 450/2-78-029, December 1978.

71. U.S. EPA, "Draft Development Document Including the Data Base for Effluent Limitations Guidelines (BATEA), New Source Performance Standards, and Pretreatment Standards for the Inorganic Chemicals Manufacturing Point Source Category," Contract No. 68-01-4492, April 1979.

72. Hwang, Seong T., and Fahrenthold, Paul, "Treatability of the Organic Priority Pollutants by Steam Stripping," presented at A.I.Ch.E. meeting, August 1979.

73. Burns and Roe submittal to the U.S EPA, "Executive Summary of Effluent Limitations Guidelines for the Pharmaceutical Industry," July 1979.

74. Burns and Roe submittal to the U.S. EPA, "Supplement to the Draft Contractors Engineering Report for the Development of Effluent Limitations Guidelines for the Pharmaceutical Industry," July 1979.

75. Fox, C.R., "Removing Toxic Organics from Wastewater," Chemical Engineering and Process, August 1979.

76. Boznowski, J.H., and Hanks, D.L., "Low-Energy Separation Processes," Chemical Engineering, May 7, 1979, pp. 65-71.

77. Heist, James A., "Freeze Crystallization," Chemical Engineering, May 7, 1979, pp. 72-82.

78. Hanson, Carl, "Solvent Extraction-An Economically Competitive Process," Chemical Engineering, May 7, 1979, pp. 83-87.

79. Region 2 S&A Chemistry Section memo to William Telliard of Effluent Guidelines Division, "Quantitative Organic Priority Pollutant Analyses-Proposed Modifications to Screening Procedures for Organics," December 12, 1978.

80. Arthur D. Little submittal to the U.S. EPA, "Economic Analyses of Interim Final Effluent Guidelines for the Pharmaceutical Industry," August 1976.

81. Arthur D. Little submittal to the U.S. EPA, "Preliminary Economic Assessment of the Pharmaceutical Industry for BATEA Effluent Limitation Guidelines Studies," February 1978.

82. Office of Quality Review to Robert B. Schaffer of Effluent Guidelines Division, "Treatability of "65" Chemicals Part B-Adsorption of Organic Compounds on Activated Charcoal," December 8, 1977.

83. Waugh, Thomas H., "Incineration, Deep Wells Gain New Importance," Science, Vol. 204, June 15, 1979, pp. 1188-1190.

84. Wild, Norman H., "Calculator Program for Sour-Water-Stripper Design," Chemical Engineering, February 12, 1979, pp. 103-113.

85. M & I preliminary submittal to the U.S. EPA, "A Demonstrated Approach for Improving Performance and Reliability of Biological Wastewater Treatment Plants," December 1977.

86. Gibbobs, J. D., Nonparametric Statistical Inference, McGraw-Hill, 1971.

87. Swan, Raymond, "Pharmaceutical Industry Sludge: Drug Makers Face Waste Management Headache," Sludge, July-August 1979, pp. 21-25.

88. Robins, Winston K., "Representation of Extraction Efficiencies," Analytical Chemistry, Vol. 51, No. 11, September 1979, pp. 1860, 1861.

89. Dietz, Edward A., and Singley, Kenneth F., "Determination of Chlorinated Hydrocarbons in Water by Headspace Gas Chromotography," Analytical Chemistry, Vol. 51, No. 11, September 1979, pp. 1809-1814.

90. U.S. EPA, "Indicatory Fate Study," Report No. 600/2-79-175, August 1979.

91. U.S. EPA, "Biological Treatment of High Strength Petrochemical Wastewater," Report No. 600/2-179-172, August 1979.

92. U.S. EPA, "Activated Carbon Treatment of Industrial Wastewaters: Selected Technical Papers," Report No. 600/2-79-177, August 1979.

93. U.S. EPA, "Biodegradation and Treatability of Specific Pollutants," Report No. 600/9-79-03, October 1979.

94. Interagency Regulatory Liasion Group, "Publications on Toxic Substances: A Descriptive Listing," 1979.

95. Federal Register, Vol. 44, No. 233 - Monday, December 3, 1979, pp. 69464-69575.

96. Engineering-Science, Inc. submittal to the U.S. EPA, "Effectiveness of Waste Stabilization Pond Systems for Removal of the Priority Pollutants," December 1979.

97. U.S. EPA, "Seminar for Analytical Methods for Priority Pollutants," May 1978.

98. Strier, Murray P., "Pollutant Treatability: A Molecular Engineering Approach," Vol. 14, No. 1., January 1980, pp. 28-31.

99. U.S. EPA, "Fate of Priority Pollutants in Publicly Owned Treatment Works - Pilot Study," Report No. 440/1-79-300, October 1979.

100. Malina, Joseph F., Jr., "Biodisc Treatment," no date.

101. Gloyna, Earnest F., and Tischler, Lial F., "Design of Waste Stabilization Pond Systems," presented at International Association on Water Pollution Research, Conference on Developments on Land Methods of Waste Treatment and Utilization, October 1978.

102. Culp, Russell L., "GAC Water Treatment Systems," Public Works, February 1980, pp. 83-87.

103. Lawson, C.T., and Hovious, V.C., "Realistic Performance Criteria for Activated Carbon Treatment of Wastewaters from the Manufacture of Organic Chemicals and Plastics," Union Carbide Corporation, February 14, 1977.

104. U.S. EPA, "Development of Treatment and Control Technology for Refractory Petrochemical Wastes," Report No. 600/2-79-080, April 1979.

105. Pharmaceutical Manufacturers Association, "Administrative Officers of the Member Firms and Associates of the PMA," October 1976.

106. Manufacturing Chemists Association submittal to Paul Fahrenthold of Effluent Guidelines Division, "Comments on the Molecular Engineering Approach to Effluent Guideline Development," January 23, 1979.

107. Chemical Manufacturers Association submittal to the U.S. EPA "CMA Comments on EPA's Proposed Leather Tanning and Finishing Effluent Limitations Guidelines and Standards," March 27, 1980.

108. U.S. EPA, "Ambient Water Quality Criteria," Criteria and Standards Division, unpublished draft report.

109. U.S. EPA, "Development Document for Effluent Limitations Guidelines and New Source Performance Standards for the Copper, Nickel, Chromium, and Zinc Segment of the Electroplating Point Source Category," Report No. 440/1-74-003a, March 1974.

110. Walk, Haydel and Associates, Inc., "Summary Report for the Pharmaceutical BAT/Priority Pollutant Orientation Study," Contract No. 68-01-6024, Work Assignment No. 3, May 20, 1980.

111. Considine, Douglas M. (ed.), Chemical and Process Technology Encyclopedia, McGraw Hill Book Co., New York, N.Y., 1974.

112. Hawley, Gessner G., The Condensed Chemical Dictionary, 9th edition, Van Nostrand Reinhold Co., New York, N.Y., 1977.

113. Calspan Corp., "Addendum to Development Document for Effluent Limitations Guidelines and New Source Performance Standards, Major Inorganic Products Segment of Inorganic Chemicals Manufacturing Point Source Category," Contract No. 68-01-3281, 1978.

114. Coleman, R.T., J.D. Colley, R.F. Klausmeiser, D.A. Malish, N.P. Meserole, W.C. Micheletti, and K. Schwitzgebel, "Treatment Methods for Acidic Wastewater Containing Potentially Toxic Metal Compounds," EPA Contract No. 68-02-2608, U.S. Environmental Protection Agency, 1978. 220 pp.

115. Colley, J.D., C.A. Muela, M.L. Owen, N.P. Meserole, J.B. Riggs, and J.C. Terry, "Assessment of Technology for Control of Toxic Effluents from the Electric Utility Industry," EPA 600/7-78-090, U.S. Environmental Protection Agency, 1978.

116. Hannah, S.A., M. Jelus, and J.M. Cohen, "Removal of Uncommon Trace Metals by Physical and Chemical Treatment Processes," Journal Water Pollution Control Federation, 49(11): 2297-2309, 1977.

117. Larsen, H.P., J.K. Shou, and L.W. Ross, "Chemical Treatment of Metal Bearing Mine Drainage," Journal Water Pollution Control Federation, 45(8): 1682-1695, 1973.

118. Maruvama, T., S.A. Hannah, and J.M. Cohen, "Metal Removal by Physical and Chemical Treatment Processes," Journal Water Pollution Control Federation, 47(5):962-975, 1975.

119. Nilsson, R., "Removal of Metals by Chemical Treatment of Municipal Waste Water," Water Research, 5:51-60, 1971.

120. Patterson, J.W., and R.A. Minear, "Wastewater Treatment Technology," Illinois Institute of Technology, 1973.

121. Patterson, J.W., "Wastewater Treatment Technology," Ann Arbor Science Publishers, Inc., Ann Arbor, Micigan, 1975.

122. Patterson, J.W., H.E. Allen, and J.J. Scala, "Carbonate Precipitation for Heavy Metals Pollutants," Journal Water Pollution Control Federation, 49(12):2397-2410, 1977.

123. Schlauch, R.M., and A.C. Epstein, "Treatment of Metal Finishing Wastes by Sulfide Precipitation," EPA-600/2-75-049, U.S. Environmental Protection Agency, 1977, 89 pp.

124. Scott, M.C., "Sulfex - A New Process Technology for Removal of Heavy Metals from Waste Streams," The 32nd Annual Purdue Industrial Waste Conference, Lafayette, Indiana, 1977, 17 pp.

125. Scott, M.C., "Heavy Metals Removal at Phillips Plating," WWEMA Industrial Pollution Conference, St. Louis, Missouri, 1978, 16 pp.

126. Sorg, T.J. O.T. Love, and G.S. Logsdon, "Manual of Treatment Techniques for Meeting the Interim Primary Drinking Water Regulations," EPA-600/8-77-005, U.S. Environmental Protection Agency, 1977. 73 pp.

127. U.S. EPA, "Development Document for Proposed Effluent Limitations Guidelines, New Source Performance Standards, and Pretreatment Standards for the Inorganic Chemicals Manufacturing Point Source Category," Contract No. 440/1-80/007-6, June 1980.

128. Sabadell, J.E., "Traces of Heavy Metals in Water Removal Processes and Monitoring," EPA-902/9-74-001. U.S. Environmental Protection Agency, 1973.

129. U.S. EPA, "Analytical Methods for the Verification Phase of the BAT Review," June 1977.

130. The Research Corporation of New England submittal to the U.S. EPA, "Assessment of the Environmental Effect of the Pharmaceutical Industry," December 1978.

131. Catalytic, Inc., "Computerized Wastewater Treatment Model," Prepared for U.S. EPA, 1980.

132. Catalytic, Inc., Submittal to Burns and Roe, "Computer Print Out - Pharmaceutical Analysis," January 29, 1980.

133. U.S. EPA, "Fate of Priority Pollutants in Publicly Owned Treatment Works - Interim Report," October 1980.

134. Roegner, Russell, "Statistical Analysis Supporting Subcategorization for the Pharmaceutical Industry," U.S. EPA, September 14, 1983.

135. "Statistical Support for Pharmaceutical Rulemaking - September 1983," SRI International, September 1983.

136. "Fate of Priority Pollutants in Publicly Owned Treatment Works - Final Report," U.S. EPA, September, 1983.

137. "Pretreatment Standards Evaluation for the Pharmaceutical Manufacturing Category," EPA Contract No. 68-01-6675, E.C. Jordan Co., August 1983.

138. Treybal, R.E., Mass - Transfer Operations, Third Edition, McGraw-Hill Book Company, New York, NY, 1980.

139. McCabe, W.L., and J.C. Smith, Unit Operations of Chemical Engineering, Third Edition, McGraw-Hill Book Company, New York, NY, 1976.

140. Peters, M.S., and K.D. Timmerhaus, Plant Design and Economics for Chemical Engineers, Second Edition, McGraw-Hill Book Company, New York, NY, 1968.

141. Chemical Engineers Handbook, 4th Edition, McGraw-Hill Book Company, New York, NY, 1963.

142. U.S. Environmental Protection Agency, Proposed Development Document for Effluent Limitations Guidelines and Standards for the Pesticides Point Source Category, EPA 440/1-82/079-b, Washington, D.C., November 1982.

SECTION XV

LEGEND OF ABBREVIATIONS

AA	atomic absorption
A.C.	activated carbon
AE	Acid extractables
atm	atmosphere
avg.	average
BADCT	Best Available Demonstrated Control Technology
BAT (BATEA)	Best Available Technology Economically Achievable
bbl.	barrel
BCT	Best Conventional Control Technology
B-N	Base - Neutral Extractables
BOD_5	Biochemical Oxygen Demand, five day
BPT (BPCTA)	Best Practicable Control Technology Currently Available
Btu	British Thermal Unit
°C	degrees Centigrade
C.A.	carbon adsorption
cal.	calorie
cc	cubic centimeter
cfm	cubic feet per minute
cfs	cubic feet per second
cm	centimeter
CN	cyanide
COD	Chemical Oxygen Demand
conc.	concentration
cu.m.	cubic meter
deg.	degree
DO	dissolved oxygen
E.Col.	Escherichia coli - coliform bacteria
Eq.	equation
°F	degrees Fahrenheit
Fig.	Figure
F/M	Food to microorganisms ratio (lbs BOD/lbs MLSS)
fpm	feet per minute
fps	feet per second
ft	foot
g	gram
gal.	gallon
GC	Gas chromatography
GC/MS	Gas chromatography/Mass Spectroscopy
gpd	gallon per day
gpm	gallon per minute
hp	horsepower
hp-hr	horsepower-hour
HPLC	High Pressure Liquid Chromatography

hr	hour
in	inch
kg	kilogram
KW	kilowatt
KWh	kilowatt hour
l	liter
l/kkg	liters per 1000 kilograms
lb	pound
m	meter
M	thousand
mg	milligram
MGD	million gallons per day
mg/l	milligrams per liter
min	minute
ml	milliliter
MLSS	mixed liquor suspended solids
MLVSS	mixed liquor volatile suspended solids
mm	millimeter
MM	million
mole	gram molecular weight
mph	mile per hour
mu	millimicron
NH_3-N	ammonia nitrogen
NO_3-N	nitrate nitrogen
NPDES	National Pollutant Discharge Elimination System
NSPS	New Source Performance Standards
O_2	Oxygen
PO_4	phosphate
p.	page
pH	potential hydrogen or hydrogen-ion index (negative logrithm of the hydrogen-ion concentration)
POTW	Publicly Owned Treatment Works
pp.	pages
ppb	parts per billion
ppm	parts per million
PSES	Pretreatment Standards for Existing Sources
psf	pounds per square foot
psi	pounds per square inch
PSNS	Pretreatment Standards for New Sources
RBC	Rotating Biological Contactor
R.O.	reverse osmosis
rpm	revolution per minute
RWL	raw waste load
sec.	second
Sec.	Section
SIC	Standard Industrial Classification
SOx	Oxides of Sulfur (e.g. sulfate)
sq.	square
sq. ft.	square foot

SS	suspended solids
STP	standard temperature and pressure
SRWL	standard raw waste load
TDS	total dissolved solids
TKN	total Kjedahl nitrogen
TLM	median tolerance limit
TOC	total organic carbon
TOD	total oxygen demand
TSS	total suspended solids
VOA	Volatile Organic Analysis
vol	volume
wt	weight
yd	yard
u	micron
ug	microgram
ug/l	microgram per liter

note: symbols for chemical elements and compounds are in accordance with IUPAC and standard chemical nomenclature.

SECTION XVI

ACKNOWLEDGMENTS

The U.S. Environmental Protection Agency wishes to acknowledge the contributions to this project by Environmental Science and Engineering, Inc., of Gainesville, Florida. The key contributors were John Crane, Bevin Beaudet, Susan Albrecht, Russell Bowen, Leonard Carter, and Margaret Farrell. We also wish to thank the following personnel of the E.C. Jordan Co., of Portland, Maine, for their assistance: Willard Warren, Conrad Bernier, Robert Steeves, Michael Crawford, and Neal Jannelle.

In the early stages of this project, the following members of the Burns and Roe Industrial Services Corp. made significant contributions to the data base development and technical analysis: Arnold Vernick, Barry Langer, Jeffrey Arnold, Tom Fieldsend, Thomas Gunder, Vaidyanathan Ramaiah, Mark Sadowski, Mary Surdovel, Jeffrey Walters, and Samuel Zwickler. The following personnel at Walk, Haydel and Associates, Inc. also provided technical support for this regulatory effort: John Beaver, Forrest Dryden, E. Jasper Westbrook, Richard Melton, Ronald Rossi, Miles Seifert, Efrain Toro, Fred Zak, Paul Schneider, and Anita Junker.

The assistance of PEDCo, of Cincinnati, Ohio, is also acknowledged for their technical input in this project. The efforts of the Research Corporation of New England (TRC) in developing and maintaining an open literature data base are also appreciated.

We wish to acknowledge the plant managers, engineers, and other representatives of the pharmaceutical industry without whose cooperation and assistance in site visits and information gathering, the completion of this project would have been greatly hindered. We also thank the environmental committees of the Pharmaceutical Manufacturers Association for their assistance.

The assistance of all personnel at EPA Regional Offices and State environmental departments who participated in the data gathering efforts is greatly appreciated.

Appreciation is expressed to those at EPA Headquarters who contributed to the completion of this project, including: Louis DuPuis, Henry Kahn, Russ Roegner, Joseph Yance, Rob Ellis, Jean Noroian, Susan Green, John Ataman, and Kathleen Ehrensberger, Office of Analysis and Evaluation, Office of Water Regulations and Standards; Alexander McBride, Rod Frederick, Richard Healy, William Kaschak, Rich Silver, and Ruth Wilbur, Monitoring and Data Support Division, Office of Water Regulations and Standards, Susan Lepow and Catherine Winer, Office of General Counsel;

Mahesh Podar, Office of Policy and Resource Management; and Bruce Newton, Office of Water Enforcement.

Within the Effluent Guidelines Division, Jeffery Denit, Joseph Vitalis, Gregory Aveni, Glenda Colvin, Kointheir Ok, Pearl Smith, Glenda Nesby, Carol Swann, Linda Wilbur, Marvin Rubin, James Gallup, Devereaux Barnes, Kaye Storey, Robert Schaffer, Paul Fahrenthold, Michael Kosakowski, Dan Lent, and Susan Delpero made significant contributions to this project.

APPENDIX A

COST, ENERGY, AND NON-WATER QUALITY ASPECTS

A. INTRODUCTION

Previous sections describe the respective BPT, BAT, NSPS, PSES, and PSNS control options that were considered as the basis for final rules. This section summarizes the cost, energy, and other non-water quality impacts (including implementation requirements and the generation of air pollution, noise pollution, and solid waste) of these various treatment options.

As explained previously, this document does not address Agency efforts to establish BCT effluent limitations guidelines for the pharmaceutical industry. EPA is also postponing a final decision on appropriate BAT limitations and NSPS for COD until more data are obtained and appropriate COD removal technologies are identified. The reader is referred to the development document supporting the November 1982 proposal for the latest published information on cost, energy, and non-water quality aspects of BCT technology options and technology options for control of COD at direct discharging plants. Additionally, EPA decided to propose rather than to promulgate new source performance standards for the conventional pollutants BOD_5 and TSS. For the latest information on NSPS technology options for controlling conventional pollutants, see Proposed Development Document for New Source Performance Standards for the Pharmaceutical Manufacturing Point Source Category (U.S. EPA, September 1983).

B. METHODOLOGY FOR DEVELOPMENT OF COSTS

1. Introduction

This section describes how estimates of the costs of implementation of the technology options were developed. The actual cost of implementing these treatment options can vary at each individual facility, depending on the design and operation of the production facilities and on local conditions. EPA developed treatment costs that are representative of costs anticipated to be incurred at existing and new source direct and indirect discharging plants in the pharmaceutical industry. The methodology for development of costs is summarized below. To develop the cost estimates presented in this section, the Agency relied on information contained in Section VIII of the Development Document for Interim Final Effluent Limitations Guidelines and Proposed New Source Performance Standards for the Pharmaceutical Manufacturing Point Source Category (U.S. EPA, December 1976) and Supplement A to that document (55), the Catalytic Treatment Model, and on information contained in the April 5, 1982, issue of Chemical Engineering. These materials can be found in the record of the final rulemaking.

2. Model Plant Approach

EPA estimated the costs of implementing the control and treatment options discussed in Sections VII and VIII in order to determine the economic impact of each technology option. EPA based its cost estimates for cyanide and TVO control and treatment on model plant raw waste characteristics. However, in the case of the BPT TSS limitations, plant specific cost estimates were developed. EPA selected model plant sizes that cover the range of the anticipated sizes of new and existing plants in the pharmaceutical industry. From the model plant costs, EPA constructed cost curves that were used to predict costs that would be incurred at each individual pharmaceutical plant in complying with the technology options considered as the basis of final regulations. These individual plant cost estimates were then used to estimate the potential economic impact associated with each technology option.

3. Cost Estimating Criteria

In order to develop cost estimates for the treatment options under consideration, criteria were developed relating to capital, operating, and energy costs. These criteria are presented in Table A-1. EPA's estimates are pre-engineering estimates and are expected to have a variability consistent with this type of estimate, on the order of plus or minus 30 percent.

All costs presented are in terms of 1982 dollars. Since construction costs escalate, these estimates may be adjusted through the use of appropriate cost indices. The most accepted and widely-used cost index in the engineering field is the Engineering News Record (ENR) construction cost index. The ENR Index for cost data presented in this document is 3,825. All total annual costs stated herein include capital recovery costs equal to 22 percent of the total capital costs. All total capital costs include engineering and contingency costs along with equipment and installation costs.

C. COSTS FOR IMPLEMENTATION OF BPT OPTIONS CONTROLLING BOD5, COD, AND TSS

As explained in Section VIII, EPA considered the option of modifying existing BPT BOD5 and COD effluent limitations for subcategories B, D, and E. The modified BOD5 and COD limitations would, in certain instances, relax the 1976 BPT limitations for those pollutants to be consistent with EPA's assessment of the minimum concentration levels attainable through the application of the best practicable control technology currently available, as defined in the 1976 rulemaking. No costs are associated with this option because it involves the relaxation of existing limits.

TABLE A-1

COST ESTIMATING CRITERIA

1. Capital costs are for 1982: ENR = 3825
2. Steam stripping capital cost: 4.74 times purchased equipment cost[1]
3. Miscellaneous Construction Costs:

Piping:	20% of installed equipment cost[2]
Electrical:	14% of installed equipment cost[2]
Instrumentation:	8% of installed equipment cost[2]
Site Preparation:	6% of installed equipment cost[2]

4. Engineering and Contingencies are 30% of total installed costs, including installed equipment, piping, electrical, instrumentation, and site preparation costs.

5. Annual fixed costs are 22% of capital expenditures.

6. Operation/Maintenance Costs:

Labor:	steam stripping, $29,000/man-year including taxes and fringe benefits[3] (Eng. Tech. level V) $24,000/man-year including taxes and fringe benefits[3] (Eng. Tech. level IV)

1. Cran, John, Chemical Engineering, April 6, 1981.
2. Development Document for Interim Final Effluent Limitations Guidelines and Proposed New Source Performance Standards for the Pharmaceutical Manufacturing Point Source Category, U. S. EPA, Washington, D. C., December 1976. (6)
3. "National Survey of Professional, Administrative, Technical, and Clerical Pay, March 1981," U. S. Department of Labor, September 1981. (7)
4. Proposed Development Document for Effluent Limitations Guidelines and Standards for the Pharmaceutical Point Source Category, U. S. EPA, Washington, D.C., November 1982. (2)
5. Vendor and Supplier Quotations to Environmental Science and Engineering, Inc., Gainesville, Florida, 1982 and 1983. (8)

Maintenance:	3% of total capital costs[4]
Sludge Disposal:	$8.64/cubic yard (non-hazardous)[5]
Electricity:	$0.046/kilowatt-hour[6]
Steam:	$5.73/1000 pounds[7]
Chemicals:	
hydrated lime:	$51/ton[8]
sulfuric acid (66°):	$85/ton[8]
anhydrous ammonia:	$392/ton[5]
phosphoric acid (80%):	$618/ton[5]
chlorine gas:	$441/ton[8]
polymer:	$2.54/lb[8]

---

6. "Electric Utility Company Monthly Statement," March 1980 - Forward: Federal Energy Regulatory Commission, Form 5, as cited in Monthly Energy Review, U. S. Department of Energy, Energy Information Administration, DOE/EIA-0035 (81/12), December 1981. (9)
7. Treatability Manual, Volume IV. Cost Estimating, EPA-60018-80-042d, U. S. Environmental Protection Agency, Office of Research and Development, July 1980.
8. Innovative and Alternative Technology Assessment Manual, U. S. EPA, Office of Water Program Operations, Washington, D. C., February 1980. (10)

EPA also considered the option of modifying the existing BPT effluent TSS limitations for subcategories B, D, and E and establishing a BPT TSS limitation for subcategories A and C. EPA based the new and modified BPT TSS limitations on the application of biological treatment, which is the same technology that formed the basis of BPT effluent limitations for subcategories A, B, C, D, and E. Thus, in general, EPA expects that no incremental costs will be incurred in meeting limitations based on biological treatment. However, EPA identified five plants that comply with the 1976 BPT BOD_5 limits that would not comply with the new or modified TSS limits that EPA believes are characteristic of well-designed and well-operated biological treatment systems. Therefore, EPA developed plant specific estimates of the incremental costs that would be incurred at these five plants to meet the new and modified TSS limits. These costs are shown in Table A-2 and include total capital and annual costs for the installation and operation of clarification technology, including polymer addition for the five plants. The design criteria for these clarifiers are identical to those specified in Supplement A to the 1976 BPT Development Document. Total annual costs include costs for sludge disposal, polymer addition, maintenance and labor. Total capital costs include costs for two clarifiers to be operated in parallel, polymer feed facilities and pumps.

D. COSTS FOR IMPLEMENTATION OF TOXIC POLLUTANT CONTROLS

Agency analyses indicate that toxic pollutant raw waste concentrations are likely to be similar for plants in all four subcategories where toxic pollutants are used or generated in the manufacturing process. For this reason, EPA developed one model treatment system for removal of cyanide and one model treatment system for control of toxic volatile organics. These models can be applied uniformly to plants in all subcategories.

1. Cyanide Control

The cost estimates for cyanide control were generated by the Catalytic Treatment Model based on the design criteria specified in Section VIII of the November 1982 Development Document. Table A-3 presents design criteria for a cyanide destruction unit. The cyanide removal mechanism assumed for purposes of developing cost estimates is oxidation with hypochlorite in an alkaline environment. The Agency assumed that the cyanide destruction unit would be employed in-plant to treat waste streams contaminated with cyanide prior to dilution by other non-contaminated streams. Capital costs for the cyanide destruction unit include costs for a two-stage concrete reaction vessel, a pH control system, an oxidation reduction potential control system, a chlorinator, a vaporizer, circulation pumps, two reagent feed systems (sodium hypochlorite and caustic), detention tanks and mixers. The annual costs include costs for chemicals, energy, maintenance and labor.

TABLE A-2

INCREMENTAL COST REQUIREMENTS FOR ACHIEVING
BPT TSS LIMITATIONS

PLANT CODE	CAPITAL COSTS	ANNUAL COSTS*	O&M COSTS
12098	$92,000	$24,000	$19,000
12160	$92,000	$25,000	$19,500
12248	$92,000	$27,000	$21,000
12462	$102,000	$37,000	$29,000
12471	$92,000	$27,000	$21,000
TOTAL	$470,000	$140,000	$109,500

*All annual costs assume 22% capital recovery.

TABLE A-3

DESIGN CRITERIA FOR CN REMOVAL
BY ALKALINE CHLORINATION

EFFECTIVENESS: Cyanide destruction by sodium hypochlorite addition

APPLICATION LIMITATIONS: Inf. TSS $\leq$ 50 mg/l

DESIGN BASIS: Mean Flow 26,000 gal/day subcategory C continuous operation

CONTACT TIME:

FIRST STAGE	10 minutes
SECOND STAGE	30 minutes

CHEMICAL REQUIREMENTS:

15 parts HYPOCHLORITE per part CN

17 parts NaOH* per part CN

pH 8-9.5

MAJOR EQUIPMENT:

Two stage, concrete reaction vessel with mixer

pH control system

ORP control system

Oxidation - chemical feed system

*or chemical equivalent

Table A-4 presents estimates of the installation and operating costs of the cyanide destruction unit in treating three different wastewater flow rates. EPA used these three sets of cost estimates to develop the cost curves presented in Figures A-1 and A-2. The curves were used to predict costs that would be incurred at individual plants in meeting cyanide limitations and standards based on the application of cyanide destruction technology. In estimating plant-specific costs, EPA assumed that the process stream to be treated would be 10 percent of the total plant process wastewater flow rate. This is the same assumption that was made in estimating total industry costs that were presented in the development document supporting the November 1982 proposed rules. The Agency received no comments addressing this aspect of the proposed regulation.

2. Toxic Volatile Organics Control

Table A-5 presents design criteria for a steam stripper to reduce the discharge of toxic volatile organics. The Agency assumed that the steam stripper would be employed in-plant to treat waste streams contaminated with toxic volatile organics prior to dilution by other non-contaminated waste streams. Batch treatment was assumed in the estimation of installation and operating costs for the treatment of low volume TVO waste streams (less than 57,600 GPD), while continuous systems were costed for the treatment of high volume TVO waste streams (greater than 57,600 GPD).

The design criteria presented in Table A-5 were developed for a packed column-type stripper. The Agency decided to develop costs based on the design of a packed column steam stripper because the performance of this type of stripper forms the basis of the suggested limitations for methylene chloride and chloroform presented in Section VIII. The design characteristics of the packed column stripper include a packing volume of 63 percent, a 19 foot tray to tray packed column and packing consisting of one inch porcelain saddles. The design assumes a hydraulic loading of 18.3 gpm per sq. ft. Whenever the design diameter calculated from the flow and hydraulic loading was greater than 3.5 feet, multiple columns were costed assuming parallel operation. The capital costs include costs for the following equipment: the column(s), the packing, the feed preheater (heat exchanger), the filter, the overhead condenser, tanks and pumps. The annual costs include costs for steam, electricity, cooling water, maintenance and labor.

Table A-6 presents estimates of the installation and operating costs of the steam stripper in treating nine different wastewater flow rates. EPA used these nine sets of cost estimates to develop the capital and annual cost curves shown in Figures A-3 and A-4, respectively. The curves were used to predict costs that would be incurred at individual plants in meeting TVO limitations and standards based on the application of steam

TABLE A-4

CYANIDE DESTRUCTION

CAPITAL AND ANNUAL COSTS

FLOW VARIATION	13,000 gpd	26,000 gpd	52,000 gpd
1982 CAPITAL COSTS	$67,200	$105,000	$165,200
CHEMICALS			
Hypochlorite	5,000	9,900	19,800
Caustic	1,100	2,300	4,600
ENERGY	200	300	600
LABOR	7,200	7,200	7,200
MAINTENANCE	2,200	3,300	5,200
CAPITAL AMORTIZATION	14,800	23,100	36,300
1982 ANNUAL COSTS	$30,500	$46,100	$73,700

FIGURE A-1

CYANIDE DESTRUCTION

CAPITAL COSTS

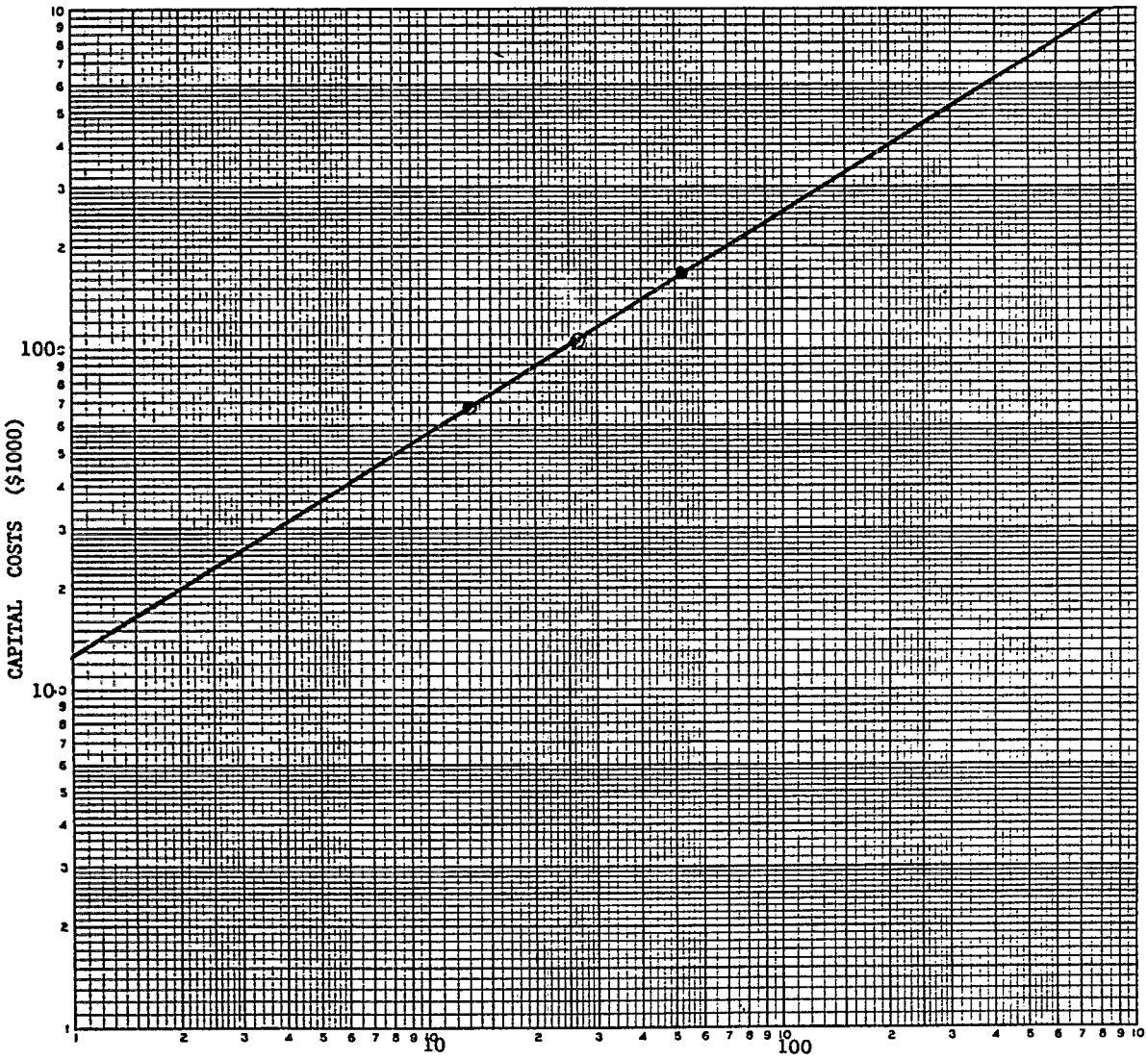

FIGURE A-2

CYANIDE DESTRUCTION

Annual COSTS

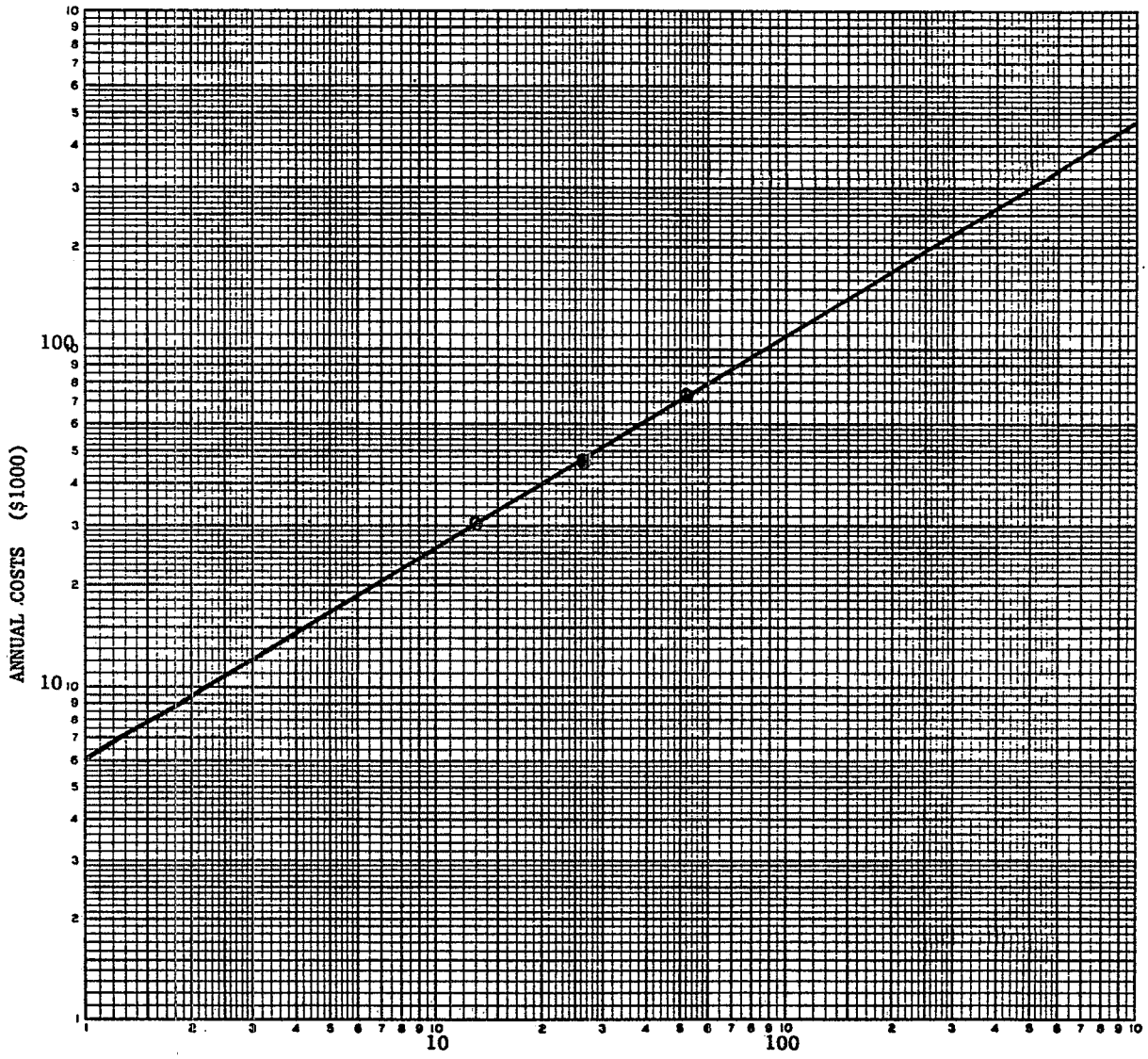

TABLE A-5

DESIGN CRITERIA FOR STEAM STRIPPER

EFFECTIVENESS: Reduction of toxic volatile organics concentrations by steam stripping

APPLICATION LIMITATIONS: Concentration of the organic volatile in the entering wastewater feed is at or near saturation

DESIGN BASIS: 19 ft. tray to tray packed column
1 inch porcelain saddles packing
63% packing volume
18.3 gpm/ft^2 hydraulic loading
TSS of influent stream less than or equal to 50 mg/l
Diameter > 3.5 ft., multiple columns costed for parallel operation 316 stainless steel

MAJOR EQUIPMENT: Column (continuous operation, spare column costed)

packing
feed preheater
feed prefilter
overhead condenser
tanks
pumps

STEAM REQUIREMENTS: 0.156 pound steam/pound feed

TABLE A-6

CAPITAL ITEMIZED COSTS FOR BATCH OPERATION

FLOW (GPD)	500	1000	5000	10,000	50,000
COLUMNS	15,620	15,620	15,620	15,620	19,454
PACKING	2,886	2,886	2,886	1,511	2,336
FEED PREHEATER	31,800	31,800	31,800	33,500	41,900
OVERHEAD CONDENSER	4,500	4,500	4,500	5,200	6,000
PRE FILTER	1,200	1,200	1,200	1,200	1,200
TANKS	11,400	12,000	12,500	16,500	23,200
PUMPS	2,000	2,000	2,000	2,100	2,300
TOTAL EQUIPMENT	69,406	70,506	70,506	75,631	96,390
(4.74 x Equipment) TOTAL CAPITAL JAN 1978 $	328,984	334,198	334,198	358,491	456,900
TOTAL CAPITAL COST 1982 $	470,945	478,408	478,408	513,184	654,058

ENR Jan 1978 = 2672
Aug 1978 = 3825

TABLE A-6 (cont'd)

CAPITAL ITEMIZED COSTS FOR CONTINUOUS OPERATION

FLOW (MGD)	0.0576	0.288	0.576	1.152
COLUMNS	31,240	35,571	59,285	106,713
PACKING	1,511	5,046	8,410	15,074
FEED PREHEATER	15,600	47,700	87,500	167,100
OVERHEAD CONDENSER	7,100	10,800	15,900	23,900
PRE FILTER	1,200	1,200	2,400	2,400
TANKS	19,000	38,700	58,200	91,400
PUMPS	3,100	5,100	5,700	7,100
TOTAL EQUIPMENT	78,751	144,117	237,395	413,687
TOTAL CAPITAL (1/78 $) 4.74 x Equipment Costs	373,280	683,115	1,125,252	1,960,876
TOTAL CAPITAL COST 1982 $	534,355	977,887	1,610,812	2,807,017

ENR Jan 1978 = 2672
Aug 1978 = 3825

TABLE A-6 (cont'd)

ANNUAL ITEMIZED COSTS FOR BATCH OPERATON

FLOW (GPD)	500	1,000	5,000	10,000	50,000
1978 CAPITAL COSTS	328,984	334,198	334,198	358,491	456,900
STEAM	609.55	1,219.10	6,095.5	12,191	60,955
STEAM FOR PREHEATING	341.28	682.55	3,412.8	6,825.5	34,128
COOLING WATER	29.20	58.4	292	584	2,920
ELECTRICITY	60.23	120.45	602.3	1,204.5	6,023
LABOR	7,628.5	7,628.5	39,967.5	40,150	80,300
MAINTENANCE (3% of Capital)	9,870	10,026	10,026	10,755	13,707
CAPITAL RECOVERY (22% Capital)	72,376	73,524	73,524	78,868	100,518
TOTAL ANNUAL Jan. 1978 $	90,915	93,259	133,920	150,578	298,551
TOTAL ANNUAL COST 1982 $	130,146	133,501	191,708	215,554	427,379

ENR: Jan. 1978 - 2672
Avg. 1982 - 3825

TABLE A-6 (cont'd)

ANNUAL ITEMIZED COSTS FOR CONTINUOUS OPERATON

FLOW (MGD)	0.0576	0.288	0.576	1.152
1978 CAPITAL COSTS	373,280	683,115	1,125,252	1,960,876
STEAM	70,220	351,101	702,202	1,404,403
STEAM FOR PREHEATING	39,315	196,574	393,150	786,298
COOLING WATER	3,364	16,819	33,638	67,277
ELECTRICITY	6,938	34,690	69,379	138,758
LABOR	88,301	88,301	88,301	88,301
MAINTENANCE (3% of Capital)	11,198	20,493	33,758	58,826
CAPITAL RECOVERY (22% Capital)	82,122	150,285	247,555	431,393
TOTAL ANNUAL Jan. 1978 $	301,458	858,263	1,567,983	2,975,256
TOTAL ANNUAL COST 1982 $	431,541	1,228,614	2,244,586	4,259,115

ENR: Jan. 1978 - 2672
Avg. 1982 - 3825

FIGURE A-3

CAPITAL COSTS

MODEL PLANT STEAM STRIPPING

BATCH vs CONTINUOUS

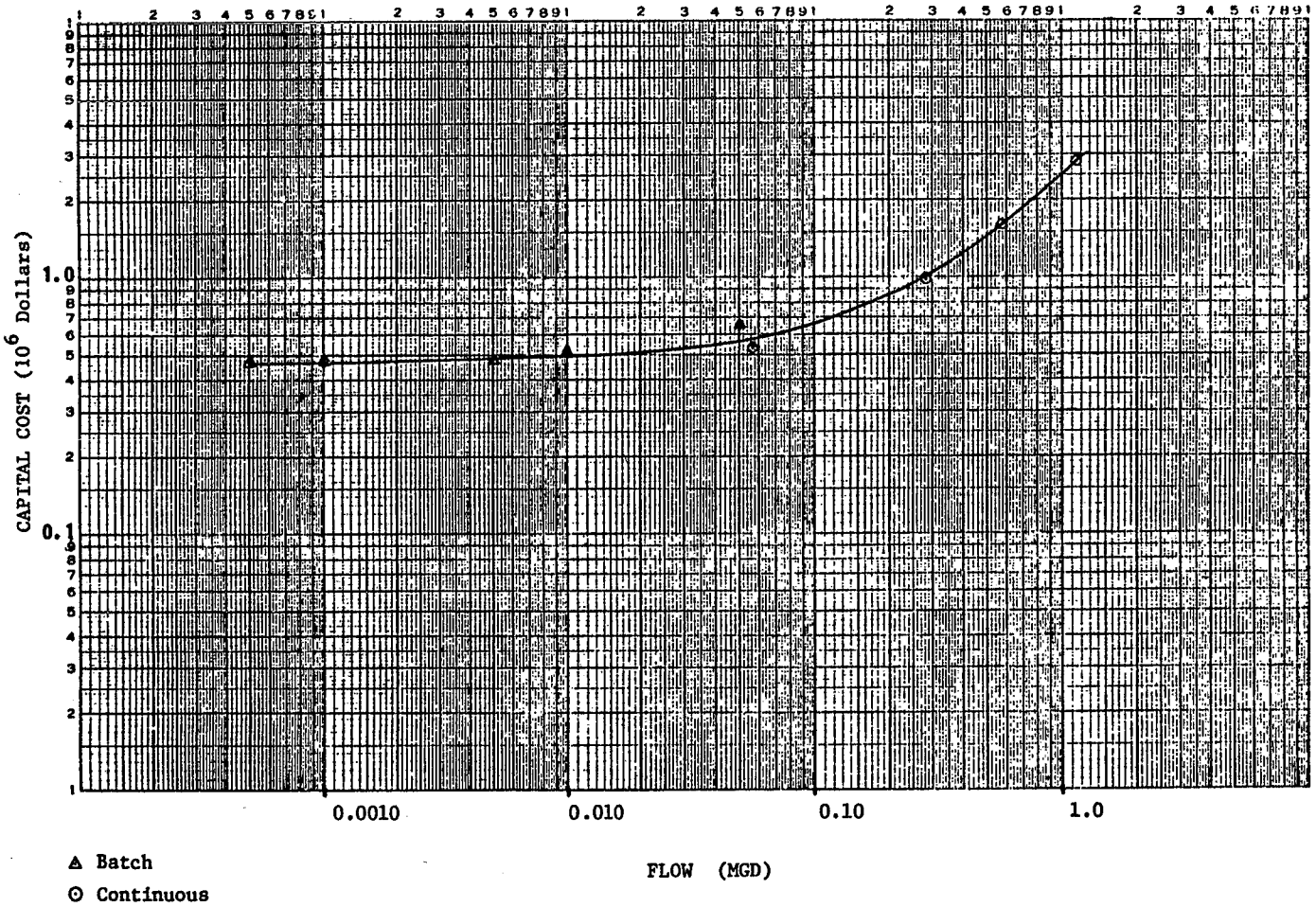

FIGURE A-4

ANNUAL COSTS

MODEL PLANT STEAM STRIPPING

BATCH vs CONTINUOUS

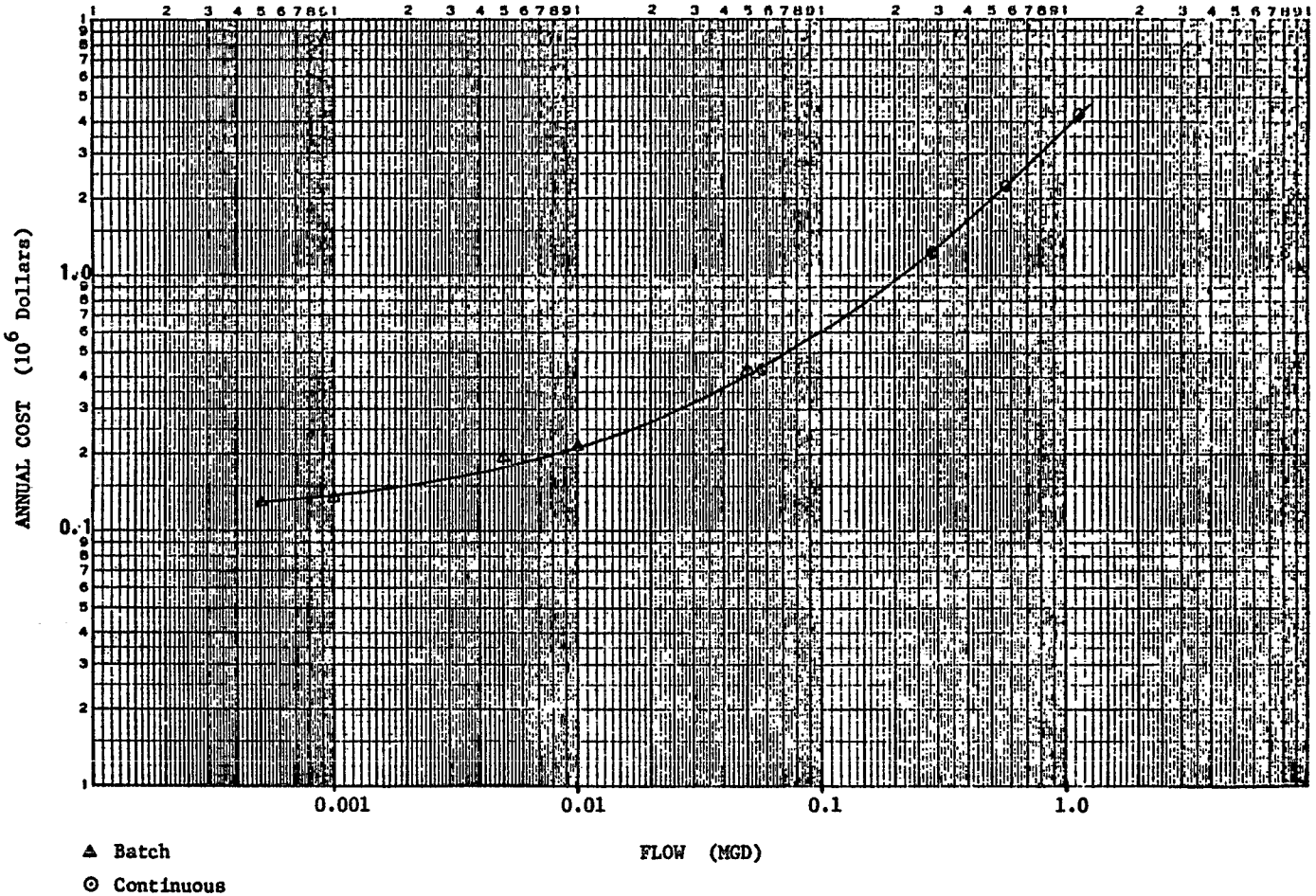

stripping technology. In estimating plant-specific costs, EPA assumed that the process stream to be treated would be 26 percent of the total plant process wastewater flow rate. This is different from the assumption that was made in estimating total industry costs that were presented in the development document supporting the November 1982 proposed rules.

The Agency received comments contending that its estimates of steam stripping costs that were presented in the proposed development document were understated. As part of the Agency's review of its cost estimating procedures, EPA obtained information on the percentage of process wastewater that is contaminated with toxic volatile organics. The Agency determined that 26 percent is a representative estimate of the quantity of process wastewater flow contaminated by toxic volatile organics when these compounds are used or generated at pharmaceutical plants.

E. ENERGY AND NONWATER QUALITY IMPACTS

The implementation of the control and treatment options considered as the basis of final rules are expected to have only a small effect on current energy demand, solid waste generation, air pollutant generation, and noise potential. The one exception is the substantial steam requirement for removing toxic volatile organics from pharmaceutical wastewaters through the application of steam stripping technology. This section addresses the non-water quality aspects of the control and treatment options considered by EPA in developing final BPT and BAT limitations and NSPS, PSES, and PSNS for the pharmaceutical manufacturing point source category.

1. Energy Requirements

a. BPT

Incremental energy associated with the treatment options considered as the basis of modified and new BPT limitations is limited to power requirements for additional pumps and agitators. The 1976 BPT regulations are based on the application of biological treatment. The technology option considered as the basis for new BPT TSS limits for subcategories A and C and modified BPT TSS limits for subcategories B and D is biological treatment. Therefore, in general, the Agency expects no additional energy demand to result from attainment of TSS limits based on the application of biological treatment. However, as discussed previously, EPA identified five pharmaceutical plants that comply with the 1976 BPT BOD_5 limits that would not comply with the TSS limits presented in Section IX that EPA believes are characteristic of well-designed and well-operated biological treatment systems. Therefore, EPA developed plant-specific estimates of the incremental technology that would be required to meet the new and modified TSS limits considered for subcategories

A and C and for subcategories B and D, respectively. EPA estimates that the incremental energy use at these five plants will be 0.01 percent more than the current energy usage at direct discharging pharmaceutical plants.

Table A-7 summarizes Agency estimates of total energy used at existing direct discharging plants for the baseline case and after the application of cyanide removal technology. Total energy is presented in terms of equivalent barrels of No. 6 fuel; purchased electrical energy (kwh) required is converted to heat energy (BTU) at a conversion of 10,500 BTU/kwh, which reflects the average efficiency of electrical power generation.

b. BAT and NSPS

No technology options were identified to effect a further removal of cyanide from wastewaters discharged by existing or new direct discharging pharmaceutical plants. Therefore, there is no incremental energy usage associated with BAT cyanide removal technology options.

Table A-8 summarizes Agency estimates of total energy used at existing and new direct discharging pharmaceutical plants for the baseline case and after the application of steam stripping technology to remove toxic volatile organics.

c. PSES and PSNS

Table A-9 summarizes Agency estimates of total energy used at existing indirect discharging pharmaceutical plants for the baseline case and after the application of cyanide removal technology. No technology options were identified to effect a further removal of cyanide from wastewaters discharged by new indirect discharging pharmaceutical plants. Therefore, there is no incremental energy usage associated with PSNS technology options.

Table A-10 summarizes Agency estimates of total energy used at existing and new indirect discharging pharmaceutical plants for the baseline case and after the application of steam stripping technology to remove toxic volatile organics.

2. Solid Waste Generation

No significant incremental solid waste generation is associated with the treatment options considered as the basis of modified and new BPT limitations, BAT limitations, NSPS, PSES, or PSNS. No appreciable quantities of sludge will be generated through the application of steam stripping or cyanide removal technologies. A small amount of solid waste will be generated at the five plants that are now in compliance with the 1976 BPT BOD_5 limits, but do not comply with the TSS limits presented in Section IX. The Agency estimates that the incremental solid waste generated

TABLE A-7

BPT CYANIDE DESTRUCTION
ENERGY REQUIREMENTS

BASE LINE ENERGY (BBL oil/yr)	INCREMENTAL ENERGY (BBL oil/yr)	TOTAL ENERGY (BBL oil/yr)
110,560	65	110,625

TABLE A-8

BAT STEAM STRIPPING
ENERGY REQUIREMENTS

BASE LINE ENERGY (BBL oil/yr)	INCREMENTAL ENERGY (BBL oil/yr)	TOTAL ENERGY (BBL oil/yr)
110,560	94,300	204,860

TABLE A-9

PSES CYANIDE DESTRUCTION
ENERGY REQUIREMENTS

BASE LINE ENERGY (BBL oil/yr)	INCREMENTAL ENERGY (BBL oil/yr)	TOTAL ENERGY (BBL oil/yr)
110,560	75	110,635

TABLE A-10

PSES STEAM STRIPPING
ENERGY REQUIREMENTS FOR METHYLENE CHLORIDE REMOVAL

BASE LINE ENERGY (BBL oil/yr)	INCREMENTAL ENERGY (BBL oil/yr)	TOTAL ENERGY (BBL oil/yr)
110,560	315,000	425,560

at these five plants will be 42 percent more than that currently generated at these five plants in complying with the 1976 BPT BOD_5 limitation.

3. Air Pollution and Noise Pollution

The technologies under consideration are not a significant source of noise pollution or air pollution. EPA anticipates that implementation of the control and treatment options under consideration will have no direct impact on air pollution or noise pollution. Some reduction in air pollution is expected at facilities that are in compliance with the suggested TVO limitations, when steam stripping technology is employed. EPA estimates that if all pharmaceutical plants were in conformance with the suggested TVO limits, the emissions of methylene chloride, chloroform toluene and benzene would be reduced by about 5000, 800, 180, and 160 pounds per day, respectively.

APPENDIX B

GLOSSARY

Abatement. The measures taken to reduce or eliminate pollution.

Absorption. The penetration of one substance (the absorbent) into the inner structure of another (the absorbate) resulting in the formation of a homogeneous mixture having the attributes of a solution.

Acclimation. The ability of an organism to adapt to changes in its immediate environment.

Acid. A substance which dissolves in water with the formation of hydronium ions.

Acidulate. To make somewhat acidic.

Act. The Clean Water Act (the Federal Water Pollution Control Act amendments of 1972, 33 USC 1251 et seq., as amended by the Clean Water Act of 1977, P.L. 95-217 and the Settlement Agreement in Natural Resources Defense Council, Inc. v. Train, 8 ERC 2120 (D.D.C. 1976), modified, 12 ERC 1833 (D.D.C. 1979), modified by Orders dated October 26, 1982, and August 2, 1983).

Activated Carbon. Carbon which has been heated by high temperature steam or carbon dioxide to produce an internal porous particle structure.

Activated Sludge Process. A wastewater treatment process in which microorganisms absorb dissolved or suspended organic matter. The significant feature of the process is the recycle of a biologically-active sludge formed by settling the micro-organism population from the aeration process in a clarifier. Waste is treated in a matter of hours instead of days.

Active Ingredient. The chemical constituent in a medicine which is responsible for its activity.

Adsorption. Adherence of one substance to the surface of another substance called the "adsorbent."

Advanced Waste Treatment. Any treatment process employed following biological treatment for the purpose of increasing pollutant removal. Advanced waste treatment is also used to produce a high-quality effluent suitable for reuse. The term "tertiary treatment" is commonly used to denote advanced waste treatment methods.

Aeration. The process of impregnating a liquid with air by spraying the liquid in the air, bubbling the air through the liquid, or agitating the liquid to promote surface absorption of air (in waste treatment, liquid from the primary clarifier is mixed with compressed air and with biologically active sludge).

Aerobic. Descriptive of a chemical reaction or a microorganism that requires the presence of air or oxygen.

Algae. Chlorophyll-bearing organisms occurring in both salt and fresh water; algae release oxygen into water and are used in treatment of sewage and plant effluent in a flocculation process.

Algicide. Chemical agent added to water to destroy algae. Copper sulfate is commonly used in large water systems.

Alkali. A water-soluble metallic hydroxide that ionizes strongly.

Alkalinity. The presence of salts of alkali metals (e.g., hydroxides, carbonates, and bicarbonates of calcium, sodium and magnesium) and usually expressed in terms of the amount of calcium carbonate that would have an equivalent capacity to neutralize strong acids.

Alkaloids. Basic (alkaline) nitrogenous botanical products which produce a marked physiological action when administered to animals or humans.

Alkylation. The addition of a aliphatic group to a molecule.

Ammonia Nitrogen. A substance produced by the microbiological decay of plant and animal protein. When ammonia nitrogen is found in waters, it is indicative of incomplete treatment.

Ampule. A sealed glass or plastic bulb containing solutions for hypodermic injection.

Anaerobic. Descriptive of a chemical reaction or a microorganism that does not require the presence of air or oxygen (e.g., the decomposition of sewage sludge by anaerobic bacteria).

Anion. Ion with a negative charge.

Antagonistic Effect. The simultaneous action of separate agents opposing each other.

Antibiotic. A substance produced by a microorganism which has the power, in dilute solution, to inhibit or destroy other organisms.

Aqueous Solution. A solution containing water.

Arithmetic Mean. The arithmetic mean, or "average", of a number of items is obtained by adding all the items together and dividing the total by the number of items.

Autoclave. A heavy vessel with thick walls for conducting chemical reactions under high pressure or for sterilizing equipment using steam under pressure.

Azeotrope. A liquid mixture of two or more substances which behaves like a single substance in that the vapor produced by partial evaporation of liquid has the same composition as the liquid. The constant boiling mixture exhibits either a maximum or minimum boiling point as compared with that of other mixtures of the same substances.

Bacteria. A type of microorganism often composed of a single cell with round, rodlike, spiral, or filamentous bodies. Bacteria exist in soil, water, organic matter, and in the bodies of plants and animals and are primarily composed of protein and nucleic acids.

Bacteriophage. A type of virus which attacks and destroys bacteria.

BADCT. Best Available Demonstrated Control Technology.

Base. A substance that in aqueous solution turns red litmus blue, furnishes hydroxyl ions, and reacts with an acid to form a salt and water only.

BAT Effluent Limitations. Limitations for point sources, other than publicly owned treatment works, which are based on the application of the best available technology economically achievable. These limitations must be achieved by July 1, 1983 and are the principal means of controlling the direct discharge of toxic and non-conventional pollutants to navigable waters.

Batch Process. A process which has an intermittent flow of raw materials into the the process and a resultant intermittent flow of product from the process.

BCT Effluent Limitations. Limitations establishing best conventional pollutant control technology for discharges of conventional pollutants from existing direct dischargers.

Bioassay. A determination made on an organism to determine its reaction to another substance.

Biochemical Oxygen Demand (BOD5). The quantity of oxygen required to oxidize the organic material in a sample of wastewater in a specified time (5 days) and at a specific temperature (120 degrees C). This quantity is not related to the oxygen requirements in chemical combustion but is determined by

the biodegradability of the material and by the amount of oxygen utilized by the microorganisms during oxidation. This test is universally accepted as the yardstick of pollution and is utilized to determine the degree of treatment in a waste treatment process.

Biota. The flora and fauna (plant and animal life) of a body of water.

Biological Products. In the pharmaceutical industry, medicinal products derived from animals or humans (e.g., vaccines, toxoids, antisera, and human blood fractions).

Biological Treatment System. A system that uses microoganisms to remove organic pollutants from a wastewater.

Blood Fractionation. The separation of human blood into its various protein fractions.

Blowdown. The liquid and solid waste materials ejected from a vessel such as a boiler.

BOD5. Biochemical oxygen demand.

Botanicals. Drugs made from a part of a plant, such as roots, bark, or leaves.

BPT Effluent Limitations. Limitations for point sources, other than publicly owned treatment works, which are based on the application of the best practicable control technology currently available. These limitations must be achieved by July 1,1977.

Brine. Water saturated with a salt.

Buffer. A solution containing both a weak acid and its conjugate weak base whose pH changes only slightly on the addition of acid or alkali.

Capsule. A gelatinous shell used to contain medicinal chemicals.

Carbohydrate. A compound of carbon, hydrogen, and oxygen, in which the ratio of hydrogen to oxygen is usually two to one.

Carbonaceous. Containing or composed of carbon.

Catalyst. A substance which changes the rate of a chemical reaction without undergoing a permanent chemical change itself.

Cation. The ion in an electrolyte which carries the positive charge and which migrates toward the cathode under the influence of a potential difference.

Cellulose. The major polysaccharide component of the cell walls of all woods, straws, bast fibers, and seed hairs. It is the principal raw material of pulp, paper, and paperboard.

Chemical Oxygen Demand (COD). A measure of oxygen-consuming capacity of organic and inorganic matter present in water or wastewater. It is expressed as the amount of oxygen consumed from a chemical oxidant in a specific test.

Chemical Synthesis. The process of chemically combining two or more constituent substances into a single substance.

Chlorination. The application of chlorine to water, sewage, or industrial wastes, generally for the purpose of disinfection.

Coagulation. Irreversible combination or aggregation of semisolid particles to form a clot or mass. This can be brought about by the addition of certain chemicals, such as lime, alum, or polyelectrolytes.

Combined Sewer. A sewer which carries both sewage and storm water run-off.

Composite Sample. A mixture of grab samples collected at the same sampling point at different times.

Comprehensive Pharmaceutical Data Base. Combined data base containing the first 308 survey of PMA-member companies and the second, or supplemental 308 survey.

Concentration. The amount of a given substance in a stated unit of a mixture or solution.

Conductivity. The property of a substance or mixture that describes its ability to transfer heat or electricity.

Contact Process Wastewaters. Process-generated wastewaters which have come in contact with the reactants used in the process. These include such streams as contact cooling water, filtrates, concentrates, wash waters, etc.

Continuous Process. A process which has a constant flow of raw materials into the process and a resultant constant flow of product from the process.

Contract Disposal. Disposal of waste products by an outside party for a fee.

Crustaceae. Small animals ranging in size form 0.2 to 0.3 millimeters long which move very rapidly through the water in search of food. They have recognizable head and posterior sections and are a principal source of food for small fish.

Crystallization. The formation of solid particles within a homogeneous phase. Formation of crystals separates a solute from a solution and generally leaves impurities behind in the mother liquid.

Culture. A mass of microorganisms growing in a medium.

Cyanide, Total. Total cyanide as determined by the test prodecure specified in 40 CFR Part 136 (Federal Register, Vol. 38, no. 199, October 16,1973).

Cyanide A. Cyanides amenable to chlorination as described in "1972 Annual Book of ASTM Standards" 1972: Standard 2036-72, Method B, p. 553.

Derivative. A substance extracted from another body or substance.

Desorption. The opposite of adsorption. A phenomenon where an adsorbed molecule leaves the surface of the adsorbent.

Diluent. A diluting agent.

Direct Discharge. The discharge of process wastewaters to navigable waters such as rivers, streams and lakes.

Disinfectant. A chemical agent which kills bacteria.

Disinfection. The process of killing the larger portion (but not necessarily all) of the harmful and objectionable microorganisms in or on a medium.

Dissolved Oxygen (DO). The amount of oxygen dissolved in sewage, water or other liquids, usually expressed in milligrams per liter or percent of saturation.

Distillation. A method of separating a liquid mixture by vaporizing it into components or groups of components.

Effluent. A liquid which leaves a unit operation or process.

Elution. (1) The process of washing out or removing with the use of a solvent. (2) In an ion exchange process, the stripping of adsorbed ions from an ion exchange resin by passing a solution through the resin solutions which contain other ions in relatively high concentrations.

Emulsion. A stable mixture of two or more immiscible liquids held in suspension.

Equalization Basin. A holding basin in which variations in flow and composition of a liquid are averaged. Such basins are used to provide a flow of uniform volume and composition to a treatment unit.

Esterification. The combination of an alcohol and an organic acid to produce an ester and water. The reaction is carried out in the liquid phase, with aqueous sulfuric acid as a catalyst.

Ethical Products. Pharmaceuticals promoted by advertising to the medical, dental, and veterinary professions.

Fatty Acids. An organic acid obtained by the hydrolysis (saponification) of natural fats and oils, e.g., stearic and palmitic acids. These acids, which contain sixteen or more carbon atoms, are monobasic and and may contain some double bonds.

Fauna. The animal life adapted for living in a specified environment.

Fermentation. A chemical change induced by a living organism or enzyme, specifically bacteria, or the microorganisms occurring in unicellular plants such as yeast, molds, or fungi.

Fermentor Broth. A slurry of microorganisms in water containing nutrients (carbohydrates, nitrogen) necessary for the microorganisms' growth.

Filter Cakes. Wet solids generated by the filtration of solids from a liquid. This filter cake may be a pure material (product) or a waste material containing additional fine solids (i.e., diatomaceous earth) that have been added to aid in the filtration.

Fines. Crushed solids sufficiently fine to pass through a screen, etc.

Flocculant. A substance that induces the aggregation of suspended solids particles in such a way that they form small clumps. Inorganic flocculants are lime, alum or ferric chloride; polyelectrolytes are examples of organic flocculants.

Flora. The plant life characteristic of a region.

Flotation. A process for separating suspended solids from a liquid where the suspended matter (as scum) is raised to the surface of the liquid in a tank by aeration, vacuum, evolution of gas, chemicals, electrolysis, heat or bacterial decomposition. The scum is then removed by skimming.

Fractionation (or Fractional Distillation). The separation of constituents of a mixture by vaporization and recondensation over specific boiling point ranges.

Fungus. Any of a plant-like group of organisms that does not produce chlorophyll; they derive their food either by decomposing organic matter from dead plants and animals or by parasitic attachment to living organisms, thus often causing infections and disease. Examples of fungi are molds, mildews, mushrooms, and the rusts and smuts that infect grain and other plants. They grow best in a moist environment at temperatures of about 25°C, with little or no light being required. In sanitary engineering, fungi are considered to be multicellular, nonphotosynthetic, heterotrophic protists.

Gland. A device of soft wear-resistant material used to minimize leakage between a rotating shaft and the stationary portion of a vessel such as a pump.

Gland Water. Water used to lubricate a gland. Sometimes called "packing water."

Grab Sample. (1) Instantaneous sampling. (2) A sample taken at a random time.

Grease. In sewage, grease includes fats, waxes, free fatty acids, calcium and magnesium soaps, mineral oils and other non-fatty materials.

Hardness. The proportion of calcium carbonate or calcium sulfate contained in a given sample of water.

Hormone. Any of a number of substances formed in the body which activate specifically receptive organs when transported to them by the body fluids. A material secreted by ductless glands (endocrine glands). Most hormones as well as synthetic analogues have in common the cyclopentanophenanthrene nucleus.

Indirect Discharge. The discharge of (process) wastewaters to publicly owned treatment works (POTW).

Injectables. Medicinals prepared in a sterile (buffered) form suitable for administration by injection.

Mycelia. The filamentous material which makes up the vegetative body of a fungus.

New Source. Any facility from which there is or may be a discharge of pollutants, the construction of which is commenced after the publication of proposed regulations prescribing a standard of performance under section 306 of the Act.

Non-Contact Cooling Water. Water used for cooling that does not come into direct contact with any raw material, intermediate product, waste product or finished product.

Non-Contact Process Wastewaters. Wastewaters generated by a manufacturing process which have not come in direct contact with the reactants used in the process. These include such streams as noncontact cooling water, cooling tower blowdown, boiler blowdown, etc.

NSPS. New Source Performance Standards.

NPDES. National Pollution Discharge Elimination System. A federal program requiring industry to obtain permits to discharge plant effluents to the nation's water courses.

Nutrient. Any substance assimilated by an organism which promotes growth and replacement of cellular constituents.

Operation and Maintenance. Costs required to operate and maintain pollution abatement equipment including labor, material, insurance, taxes, solid waste disposal, etc.

Organic Loading. In the activated sludge process,the food to microorganisms (F/M) ratio defined as the amount of biodegradable material available to a given amount of microorganisms per unit of time.

Oxidation. At one time, the term oxidation was restricted to reactions involving oxygen, but its usage has been broadened to include all reactions where electrons are transferred.

Oxidation Reduction (OR). A class of chemical reactions in which one of the reacting species gives up electrons (oxidation) while another species in the reaction accepts electrons (reductions).

Oxidation Reduction Potential (ORP). A measurement that indicates the activity ratio of the oxidizing and reducing species present.

Oxygen, Available. The quantity of atmospheric oxygen dissolved in the water of a stream; the quantity of dissolved oxygen available for the oxidation of organic matter in sewage.

Oxygen, Dissolved. The oxygen (usually designated as DO) dissolved in sewage, water or another liquid and usually expressed in mg/l, parts per million, or percent of saturation.

Parts Per Million (ppm). Parts by weight in sewage analysis;ppm by weight is equal to milligrams per liter divided by the specific gravity. It should be noted that in water analysis, ppm is always understood to imply a weight/weight ratio, even though in practice volume may be measured instead of a weight.

Pathogenic. Disease producing.

pH. The value representing the acidity or alkalinity of a solution and defined as the negative logarithm of the hydronium ion concentration or activity in a solution. The number 7 indicates neutrality, numbers less than 7 indicate increasing acidity and numbers greater than 7 indicate increasing alkalinity.

Photosynthesis. The mechanism by which chlorophyll-bearing plants utilize light energy to produce carbohydrate and oxygen from carbon dioxide and water(the reverse of respiration.).

Physical/Chemical Treatment System. A system that utilizes physical (i.e., sedimentation, filtration, centrifugation, activated carbon, reverse osmosis, etc.) and/or chemical means (i.e. coagulation, oxidation, precipitation, etc.) to treat wastewaters.

Plasma. The fluid part of blood, lymph, or intramuscular fluid in which cells are suspended.

PMA. Pharmaceutical Manufacturers Association.

Point Source. Any discernible, confined and discrete conveyance, including but not limited to any pipe, ditch, channel, tunnel, conduit, well, discrete fissure, container, rolling stock, concentrated animal feeding operation, or vessel or other floating craft, from which pollutants are or may be discharged.

Potable Water. Drinking water sufficiently pure for human use.

Potash. Potassium compounds used in agriculture and industry. Potassium carbonate can be obtained from wood ashes. The mineral potash is usually a muriate (chloride). Caustic potash is its hydrated form.

Preaeration. A process where sewage is aerated to replenish dissolved oxygen prior to primary sedimentation. The objective is to improve the treatability of the wastewater.

Precipitation. The phenomenon where small particles settle out of a liquid or gaseous suspension by gravity or when a substance held in solution passes out of that solution into solid form as a result of a chemical reaction.

Pretreatment. Any wastewater treatment process used to partially reduce the pollution load before the wastewater is introduced into a main sewer system or delivered to a treatment plant for substantial reduction of the pollution load.

Process Waste Water. Any water which, during manufacturing or processing, comes into direct contact with or results from the production or use of any raw material, intermediate product, finished product, by-product, or waste product.

Process Water. Any water(solid, liquid or vapor) which, during the manufacturing process, comes into direct contact with any raw material, intermediate product, by-product, waste product, or finished product.

Proprietary Products. Pharmaceuticals manufactured and sold only by the owner of a patent, trademark, etc.

PSES. Pretreatment Standards for Existing Sources.

PSNS. Pretreatment Standards for New Sources.

Raw Waste Load (RWL). The quantity (kg) of pollutant being discharged in a plant's wastewater measured in terms of some common denominator (i.e., kkg of production or sq. ft. of floor area).

Receiving Waters. Rivers, lakes, oceans or other bodies of water that receive treated or untreated wastewaters.

Reduction. A process in which an atom (or group of atoms) gains electrons.

Refractory Organics. Organic materials that are only partially biodegradable in biological waste treatment processes. Refractory organics include detergents, pesticides, color- and odor-causing agents, tannins, lignins, ethers, olefins, alcohols, amines, aldehydes, ketones, etc.

Residual Chlorine. The amount of chlorine left in treated water that can oxidize contaminants if they enter the stream. Hypochlorite ion concentration alone is called "free chlorine residual"; the hypochlorite ion and chloramine concentration together are called "combined chlorine residual."

Retort. A vessel, commonly a glass bulb with a long neck bent downward,used for distilling or decomposing substances by heat.

Sanitary Sewers. In a separate system, pipes in a city that carry only domestic wastewater. The storm water runoff is handled by a separate system of pipes.

Saprophytic Organism. One that lives on dead or decaying organic matter.

Secondary Treatment. The second step in most waste treatment systems in which bacteria consume the organic part of the wastes.

Seed. To introduce microorganisms into a culture medium.

Serum. A fluid extracted from an animal for the purpose of innoculation to effect the cure of a disease.

Settleable Solids. Suspended solids which will settle out of a liquid waste in a given period of time.

Sewage, Storm. The liquid flowing in sewers during or following a period of heavy rainfall.

Sewerage. A comprehensive term which includes facilities for collecting, pumping, treating and disposing of sewage; the sewerage system and the sewage treatment works.

SIC Codes. Standard Industrial Classification. Numbers used by the U.S. Department of Commerce to denote segments of industry.

Sludge, Activated. Sludge floc produced in raw or settled sewage by the growth of bacteria and other organisms in the presence of dissolved oxygen.

Sludge, Age. The ratio of the weight of volatile solids in the digester to the weight of volatile solids added per day. There is a maximum sludge age beyond which no significant reduction in the concentration of volatile solids will occur.

Sludge, Digested. Sludge digested under anaerobic conditions until the volatile content has been reduced, usually by approximately 50 percent or more.

Solution. A homogeneous mixture of two or more substances of dissimilar molecular structure. In a solution, there is a dissolving medium (solvent) and a dissolved substance (solute).

Solvent Extraction. The treatment of a mixture of two or more components by a solvent that preferentially dissolves one or more of the components in the mixture.

Steam Distillation. Fractionation process in which steam is used to provide the heat of the system.

Sterilization. The complete destruction of all living organisms in or on a medium accomplished by heating to 121°C at 5 psig for 15 minutes.

Steroid. Any one of a large group of substances chemically related to various alcohols found in plants and animals.

Still Bottom. The residue remaining after distillation of a material.

Stillwell. A pipe, chamber, or compartment with small inlets to a main body of water. Its purpose is to dampen waves or surges while permitting the water level within the well to rise and fall with the major fluctuations of the main body of water.

Stoichiometric. Characterized by being a proportion of substances exactly right for a specific chemical reaction with no excess of any reactant or product.

Stripper. A device in which relatively volatile components are removed from a mixture by distillation or by passage of steam through the mixture.

Supernatant. Floating above or on the surface.

Surge Tank. A tank for absorbing and dampening the wavelike motion of a volume of liquid; an in-process storage tank that acts as a flow buffer between process tanks.

Suspended Solids. The wastes that will not sink or settle in sewage. The quantity of material deposited on a filter when a liquid is drawn through a Gooch crucible.

Synergistic. An effect produced by a group of contributors which is greater than the sum of the individual contributors acting individually.

Tablet. A small, disc-like mass of medicinal powder used as a dosage form for administering medicine.

Tertiary Treatment. A treatment process added after secondary treatment to remove practically all solids and organic matter from wastewater.

Thermal Oxidation. The combustion of organic materials through the application of heat in the presence of oxygen.

Total Organic Carbon (TOC). A measure of the amount of carbon in a sample originating from organic matter only. The test is run by burning the sample and measuring the carbon dioxide produced.

Total Solids. The total amount of solids in a wastewater both in solution and suspension.

Toxoid. Toxin treated so as to destroy its toxicity, but still capable of inducing formation of antibodies.

Vaccine. A killed or modified live virus or bacteria prepared in suspension for inoculation to prevent or treat certain infectious diseases.

Viruses. (1) An obligate intracellular parasitic microorganism smaller than bacteria. Most can pass through filters that retain bacteria. (2) The smallest (10-300 um in diameter) form capable of producing infection and diseases in man or other large species. Occurring in a variety of shapes, viruses consist of a nucleic acid core surrounded by an outer shell (capsid) which consists of numerous protein subunits (capsomeres). Some of the larger viruses contain additional chemical substances. The true viruses are insensitive to antibiotics. They multiply only in living cells where they are assembled as complex macromolecules utilizing the cells' biochemical systems. They do not multiply by division as do intracellular bacteria.

Volatile Suspended Solids (VSS). The quantity of suspended solids lost after the ignition of total suspended solids.

Water Quality Criteria. Those specific values of water quality associated with an identified beneficial use of the water under consideration.

Zero Discharge. Plants that do not discharge wastewaters to either publicly owned treatment works or to navigable waters.

APPENDIX C

PHARMACEUTICAL INDUSTRY
WASTEWATER DISCHARGE METHODS

Plant Code No.	Indirect	Direct	Zero	Comment	POTW[1] Treatment Level
12000	X				T
12001		X			
12003	X				P
12004	X				S
12005	X				S
12006		X			
12007	X				S
12011	X				S
12012	X				T
12014		X			
12015		X	X	Recycle/Reuse	
12016	X				S
12018	X			Land Application	S
12019	X				-
12021			X	No Process Wastewater	
12022		X			
12023	X				S
12024	X			Recycle/Reuse	-
12026		X			
12030	X			Private Treatment System	
12031	X				T
12035	X				T
12036		X			
12037	X				S
12038		X		Evaporation	
12040	X				S
12042	X				-
12043	X			Subsurface Discharge	S
12044	X			Subsurface Discharge	S
12048	X				S
12051	X				S
12052			X	Subsurface Discharge	
12053		X			
12054	X				-
12055	X				-
12056	X				S
12057	X				P
12058	X				S
12060	X				S
12061	X				S
12062	X				S
12063			X	Subsurface Discharge	
12065	X			Septic System	S

12066	X				T
12068	X				
12069	X				S
12073		X		Private Treatment System	
12074	X				T
12076	X				P
12077	X				P
12078	X				P
12080	X				S
12083	X				P
12084	X				T
12085		X			
12087	X			Contract Disposal	S
12088	X				P
12089		X			
12093	X				S
12094	X				T
12095		X			
12097		X		Deep Well Injection	
12098		X			
12099			X	Contract Disposal	
12100	X				-
12102			X	Ocean Discharge	
12104	X	X			P
12107	X				P
12108	X			Ocean Discharge	-
12110	X				P
12111	X				-
12113	X				S
12115	X				S
12117		X		Private Treatment System	
12118	X			Subsurface Discharge	S
12119		X			
12120	X				S
12122	X				
12123	X				S
12125	X				-
12128	X				-
12129	X				-
12131	X				T
12132		X		Land Application	
12133			X	No Process Wastewater	
12135	X				S
12141	X				S
12143	X				S
12144	X				-
12145	X				T
12147	X				S
12155	X				S
12157	X				-
12159			X	Recycle/Reuse	
12160		X		Private Treatment System	
12161		X			

12166	X				-
12168	X			Evaporation	S
12171	X				S
12172	X				
12173			X	No Process Wastewater	
12174			X	Evaporation	
12175		X		Private Treatment System	
12177	X				-
12178	X				S
12183	X				S
12185			X	Ocean Discharge	
12186	X				S
12187	X	X		(Also Contract Disposal)	S
12191	X				S
12194	X			Private Treatment System	
12195	X				S
12198	X				S
12199	X				S
12201	X				S
12204	X				S
12205		X			
12206	X				S
12207	X				P
12210	X			Land Application	S
12211	X				-
12212	X				P
12217	X			Contract Disposal	S
12219	X				P
12224	X				S
12225			X	No Process Wastewater	
12226	X				-
12227	X				S
12230	X				-
12231			X	Subsurface Discharge	
12233	X				P
12235		X		Ocean Discharge	
12236		X			
12238	X				S
12239	X				
12240	X			Contract Disposal	S
12243	X				P
12244	X				T
12245	X			Evaporation	S
12246	X			Contract Disposal	P
12247	X				S
12248		X		Private Treatment System	
12249	X				S
12250	X				S
12251	X				S
12252	X				S
12254	X				S
12256	X	X		(Also Land Application)	S
12257	X			Land Application	T

12260	X				T
12261	X				
12263			X	Septic System	
12264	X				S
12265	X				S
12267					
12268	X				P
12269			X	Septic System	
12273	X				
12275	X				S
12277	X				
12281	X				P
12282	X				T
12283		X			
12287	X	X			S
12289	X				S
12290	X				-
12294		X			
12295	X				P
12296	X				S
12297			X	Contract Disposal	
12298		X			
12300	X				T
12302	X				S
12305	X				S
12306			X	Septic System	
12307		X			
12308		X			
12309	X				-
12310	X				P
12311	X				S
12312	X				S
12317		X			
12318	X				S
12322	X				P
12326			X	Septic System	
12330	X				P
12331	X				S
12332	X				S
12333	X				P
12338		X			
12339	X			Land Application	
12340	X				P
12342	X				S
12343	X				P
12345	X			Land Application	S
12375	X				S
12384	X				S
12385	X				T
12392	X				
12401	X				S
12405	X				-
12406		X			

12407		X			
12409	X				-
12411	X			Contract Disposal	S
12414	X				S
12415	X				T
12417	X				-
12419	X				T
12420	X				T
12427	X				S
12429	X				S
12433	X				S
12438	X				S
12439			X	Land Application	
12440	X				-
12441	X				S
12444	X				S
12447	X			Deep Well Injection	-
12454	X				S
12458	X				S
12459		X			
12460	X				-
12462		X			
12463		X		Land Application	
12464	X				-
12465	X				S
12466			X	Septic System	
12467	X				S
12468	X				S
12470	X				-
12471		X			
12472	X				P
12473	X				P
12474	X				S
12475			X	Land Application	
12476			X	Land Application	
12477	X				P
12479	X			Ocean Discharge	S
12481	X				P
12482	X				-
12495	X				S
12499 [2]	X				-
20006			X	No Process Wastewater	
20008	X				
20012	X				
20014			X	Evaporation	
20015			X	No Process Wastewater	
20016			X	No Process Wastewater	
20017	X				
20020	X				
20026	X				
20030			X	Evaporation	
20032	X				
20033	X				

20034	X			
20035			X	No Process Wastewater
20037		X		
20038			X	No Process Wastewater
20040			X	No Process Wastewater
20041			X	No Process Wastewater
20045			X	No Process Wastewater
20048			X	No Process Wastewater
20049			X	No Process Wastewater
20050	X			
20051			X	No Process Wastewater
20052	X			Septic System
20054			X	Contract Disposal
20055			X	No Process Wastewater
20057	X			
20058	X			
20062	X			
20064	X			
20070			X	No Process Wastewater
20073			X	No Process Wastewater
20075			X	No Process Wastewater
20078			X	No Process Wastewater
20080			X	No Process Wastewater
20081	X			
20082			X	No Process Wastewater
20084			X	No Process Wastewater
20087			X	No Process Wastewater
20089	X			
20090			X	No Process Wastewater
20093			X	No Process Wastewater
20094			X	No Process Wastewater
20099			X	No Process Wastewater
20100			X	No Process Wastewater
20103			X	No Process Wastewater
20106			X	No Process Wastewater
20108			X	Evaporation
20115			X	Septic System
20117	X			
20120	X			
20125			X	No Process Wastewater
20126	X			
20134			X	No Process Wastewater
20139	X			
20141			X	No Process Wastewater
20142	X			Contract Disposal
20147	X			
20148			X	No Process Wastewater
20151			X	No Process Wastewater
20155	X			
20159			X	No Process Wastewater
20165		X		Contract Disposal
20169	X			
20173			X	No Process Wastewater

20174	X			
20176			X	No Process Wastewater
20177	X			
20178			X	No Process Wastewater
20187	X			
20188	X			
20195			X	Evaporation
20197			X	No Process Wastewater
20201		X		
20203	X			Land Application
20204			X	Land Application
20205	X			
20206			X	Land Application
20208			X	No Process Wastewater
20209			X	No Process Wastewater
20210			X	No Process Wastewater
20215			X	No Process Wastewater
20216	X			
20218			X	No Process Wastewater
20220	X			
20224	X			
20225			X	No Process Wastewater
20226			X	No Process Wastewater
20228			X	No Process Wastewater
20229	X			
20231	X			
20234	X			
20235			X	No Process Wastewater
20236			X	Contract Disposal
20237	X			
20240	X			
20241			X	No Process Wastewater
20242			X	No Process Wastewater
20244	X			
20245		X		
20246		X		
20247	X			
20249			X	No Process Wastewater
20254	X			
20256			X	No Process Wastewater
20257		X		Contract Disposal
20258	X			
20261	X			
20263	X			
20264	X			
20266			X	No Process Wastewater
20267	X			
20269	X			
20270	X			
20271			X	No Process Wastewater
20273	X			
20282	X			
20288	X			

20294			X	No Process Wastewater
20295			X	No Process Wastewater
20297		X		
20298		X		
20300			X	No Process Wastewater
20303	X			
20305			X	No Process Wastewater
20307	X			
20308			X	No Process Wastewater
20310	X			Contract Disposal
20311	X			
20312	X			
20316			X	No Process Wastewater
20319		X		
20321	X			
20325			X	No Process Wastewater
20328	X			
20331	X			
20332			X	No Process Wastewater
20333	X			
20338			X	No Process Wastewater
20339	X			
20340			X	Evaporation
20342	X			
20346	X			
20347			X	No Process Wastewater
20349	X			
20350	X			
20353	X			
20355	X			
20356	X			
20359	X			
20361	X			
20362	X			
20363	X			
20364	X			
20366	X			
20370		X		Contract Disposal
20371	X			
20373			X	Land Application
20376			X	Evaporation
20377	X			
20385	X			
20387			X	Contract Disposal
20389	X			
20390			X	No Process Wastewater
20394			X	No Process Wastewater
20396			X	No Process Wastewater
20397			X	No Process Wastewater
20400	X			
20402			X	
20405	X			
20413			X	Contract Disposal

20416			X	No Process Wastewater
20421			X	No Process Wastewater
20423	X			Evaporation
20424			X	No Process Wastewater
20425			X	No Process Wastewater
20435			X	No Process Wastewater
20436			X	No Process Wastewater
20439	X			
20440			X	No Process Wastewater
20441	X			
20443	X			
20444			X	No Process Wastewater
20446	X			
20448			X	No Process Wastewater
20450	X			
20452			X	No Process Wastewater
20453	X			
20456	X			
20460	X			
20462			X	No Process Wastewater
20464			X	No Process Wastewater
20465	X			
20466	X			
20467			X	Subsurface Discharge
20470			X	No Process Wastewater
20473	X			Deep Well Injection
20476	X			
20483			X	No Process Wastewater
20485			X	No Process Wastewater
20486			X	No Process Wastewater
20490	X			
20492	X			
20494	X			
20496			X	No Process Wastewater
20498			X	No Process Wastewater
20500			X	No Process Wastewater
20502			X	No Process Wastewater
20503	X			
20504			X	No Process Wastewater
20507			X	No Process Wastewater
20509			X	No Process Wastewater
20511			X	No Process Wastewater
20518			X	No Process Wastewater
20519	X			
20522			X	No Process Wastewater
20526			X	Contract Disposal
20527	X			
20529			X	No Process Wastewater
11111		X		
33333		X		
44444		X		
55555		X		

[1]POTW Treatment Level Symbols:
P - Primary
S - Secondary
T - Tertiary

[2] Data on POTW treatment level was not requested from the Supplemental 308 (20000 series) plants