United States
Environmental Protection
Agency

Office of Water Regulations
and Standards (WH-552)
Industrial Technology Division
Washington, DC 20460

EPA 440/1-89-019.10
May 1989

Office of Water

EPA

Development Document for Effluent Limitations Guidelines and Standards for the Nonferrous Metals Manufacturing Point Source Category

FINAL

Volume X
Primary and Secondary Germanium and Gallium
Primary Rare Earth Metals
Secondary Indium
Index

Printed on Recycled Paper

ORGANIZATION OF THIS DOCUMENT

This development document for the nonferrous metals manufacturing category consists of a general development document which considers the general and overall aspects of the regulation and 31 subcategory specific supplements. These parts are organized into 10 volumes as listed below.

The information in the general document and in the supplements is organized by sections with the same type of information reported in the same section of each part. Hence to find information on any specific aspect of the category one would need only look in the same section of the general document and the specific supplements of interest.

The ten volumes contain contain the following subjects:

Volume I	General Development Document
Volume II	Bauxite Refining Primary Aluminum Smelting Secondary Aluminum Smelting
Volume III	Primary Copper Smelting Primary Electrolytic Copper Refining Secondary Copper Refining Metallurgical Acid Plants
Volume IV	Primary Zinc Primary Lead Secondary Lead Primary Antimony
Volume V	Primary Precious Metals and Mercury Secondary Precious Metals Secondary Silver Secondary Mercury
Volume VI	Primary Tungsten Secondary Tungsten and Cobalt Primary Molybdenum and Rhenium Secondary Molybdenum and Vanadium
Volume VII	Primary Beryllium Primary Nickel and Cobalt Secondary Nickel Secondary Tin
Volume VIII	Primary Columbium and Tantalum Secondary Tantalum Secondary Uranium
Volume IX	Primary and Secondary Titanium Primary Zirconium and Hafnium
Volume X	Primary and Secondary Germanium and Gallium Primary Rare Earth Metals Secondary Indium

DEVELOPMENT DOCUMENT

for

EFFLUENT LIMITATIONS GUIDELINES AND STANDARDS

for the

NONFERROUS METALS MANUFACTURING POINT SOURCE CATEGORY

VOLUME X

Primary and Secondary Germanium and Gallium
Primary Rare Earth Metals
Secondary Indium

William K. Reilly
Administrator

Rebecca Hanmer, Acting
Assistant Administrator for Water

Martha Prothro, Director
Office of Water Regulations and Standards

Thomas P. O'Farrell, Director
Industrial Technology Division

Ernst P. Hall, P.E., Chief
Metals Industry Branch
and
Technical Project Officer

May 1989

U.S. Environmental Protection Agency
Office of Water
Office of Water Regulations and Standards
Industrial Technology Division
Washington, D. C. 20460

TABLE OF CONTENTS

Supplement	Page
Primary and Secondary Germanium and Gallium	5231
Primary Rare Earths	5353
Secondary Indium	5525

For detailed contents see detailed contents list in individual supplement.

NONFERROUS METALS MANUFACTURING POINT SOURCE CATEGORY

DEVELOPMENT DOCUMENT SUPPLEMENT

for the

Primary and Secondary Germanium and Gallium Subcategory

William K. Reilly
Administrator

Rebecca Hanmer
Acting Assistant Administrator for Water

Martha Prothro, Director
Office of Water Regulations and Standards

Thomas P. O'Farrell, Director
Industrial Technology Division

Ernst P. Hall, P.E., Chief
Metals Industry Branch
and
Technical Project Officer

May 1989

U.S. Environmental Protection Agency
Office of Water
Office of Water Regulations and Standards
Industrial Technology Division
Washington, D. C. 20460

5231

TABLE OF CONTENTS

Section		Page
I	SUMMARY	5241
II	CONCLUSIONS	5243
III	SUBCATEGORY PROFILE	5225
	Description of Germanium and Gallium Production	5255
	Raw Materials	5255
	Germanium Production	5256
	Chlorination	5256
	Hydrolysis	5256
	Reduction to Metal	5256
	Purification	5257
	Gallium Production	5257
	Chlorination	5257
	Hydrolysis	5257
	Reduction to Metal	5257
	Purification	5258
	Solvent Extraction	5258
	Process Wastewater Sources	5258
	Other Wastewater Sources	5258
	Age, Production, and Process Profile	5258
IV	SUBCATEGORIZATION	5265
	Factors Considered in Subdividing the Primary and Secondary Germanium and Gallium Subcategory	5265
	Other Factors	5266
	Production Normalizing Parameters	5266
V	WATER USE AND WASTEWATER CHARACTERISTICS	5269
	Wastewater Flow Rates	5270
	Wastewater Characteristics Data	5271
	Data Collection Portfolios	5271
	Field Sampling Data	5271
	Wastewater Characteristics and Flows by Subdivision	5273
	Still Liquor	5273
	Chlorinator Wet Air Pollution Control	5273
	Germanium Hydrolysis Filtrate	5273
	Acid Wash and Rinse Water	5274
	Gallium Hydrolysis Filtrate	5274
	Solvent Extraction Raffinate	5274

TABLE OF CONTENTS (Continued)

Section		Page
VI	SELECTION OF POLLUTANT PARAMETERS	5283
	Conventional and Nonconventional Pollutant Parameters Selected	5283
	Toxic Priority Pollutants	5284
	Toxic Pollutants Never Detected	5284
	Toxic Pollutants Never Found Above Their Analytical Quantification Concentration	5285
	Toxic Pollutants Present Below Concentrations Achievable by Treatment	5285
	Toxic Pollutants Detected in a Small Number of Sources	5285
	Toxic Pollutants Selected for Further Consideration in Establishing Limitations and Standards	5286
VII	CONTROL AND TREATMENT TECHNOLOGIES	5297
	Current Control and Treatment Practices	5297
	Still Liquor	5297
	Chlorinator Wet Air Pollution Control	5298
	Germanium Hydrolysis Filtrate	5298
	Acid Wash and Rinse Water	5298
	Gallium Hydrolysis Filtrate	5298
	Solvent Extraction Raffinate	5298
	Control and Treatment Options	5298
	Option A	5298
	Option C	5299
VIII	COSTS, ENERGY, AND NONWATER QUALITY ASPECTS	5301
	Treatment Options for Existing Sources	5301
	Option A	5301
	Option C	5301
	Cost Methodology	5301
	Nonwater Quality Aspects	5302
	Energy Requirements	5302
	Solid Waste	5302
	Air Pollution	5304

TABLE OF CONTENTS (Continued)

Section		Page
IX	BEST PRACTICABLE CONTROL TECHNOLOGY CURRENTLY AVAILABLE	5307
	Technical Approach to BPT	5309
	Industry Cost and Pollutant Removal Estimates	5309
	BPT Option Selection	5309
	Wastewater Discharge Rates	5310
	Still Liquor	5310
	Chlorinator Wet Air Pollution Control	5311
	Germanium Hydrolysis Filtrate	5311
	Acid Wash and Rinse Water	5311
	Gallium Hydrolysis Filtrate	5311
	Solvent Extraction Raffinate	5311
	Regulated Pollutant Parameters	5312
	Effluent Limitations	5312
X	BEST AVAILABLE TECHNOLOGY ECONOMICALLY ACHIEVABLE	5319
	Technical Approach to BAT	5319
	Option A	5320
	Option C	5320
	Industry Cost and Pollutant Removal Estimates	5320
	Pollutant Removal Estimates	5320
	Compliance Costs	5321
	Wastewater Discharge Rates	5321
	BAT Option Selection - Proposal	5322
	BAT Option Selection - Promulgation	5322
	Regulated Pollutant Parameters	5323
	Effluent Limitations	5324
XI	NEW SOURCE PERFORMANCE STANDARDS	5331
	Technical Approach to NSPS	5331
	NSPS Option Selection - Proposal	5331
	NSPS Option Selection - Promulgation	5331
	Regulated Pollutant Parameters	5332
	New Source Performance Standards	5332

TABLE OF CONTENTS (Continued)

Section		Page
XII	PRETREATMENT STANDARDS	5337
	Technical Approach to Pretreatment	5337
	Industry Cost and Pollutant Removal Estimates	5338
	Pretreatment Standards for Existing and New Sources	5338
	PSES Option Selection - Proposal	5338
	PSES Option Selection - Promulgation	5339
	PSNS Option Selection - Proposal	5339
	PSNS Option Selection - Promulgation	5339
	Regulated Pollutant Parameters	5339
	Pretreatment Standards	5339
XIII	BEST CONVENTIONAL POLLUTANT CONTROL TECHNOLOGY	5351

PRIMARY AND SECONDARY GERMANIUM AND GALLIUM SUBCATEGORY

LIST OF TABLES

Table	Title	Page
III-1	Initial Operating Year (Range) Summary of Plants in the Primary and Secondary Germanium and Gallium Subcategory by Discharge Type	5260
III-2	Summary of Subcategory Processes and Associated Waste Streams	5261
V-1	Water Use and Discharge Rates for Still Liquor	5275
V-2	Water Use and Discharge Rates for Chlorinator Wet Air Pollution Control	5276
V-3	Water Use and Discharge Rates for Germanium Hydrolysis Filtrate	5277
V-4	Water Use and Discharge Rates for Acid Wash and Rinse Water	5278
V-5	Water Use and Discharge Rates for Gallium Hydrolysis Filtrate	5279
V-6	Water Use and Discharge Rates for Solvent Extraction Raffinate	5280
V-7	Primary and Secondary Germanium and Gallium Raw Wastewater Data from Self-Sampling	5281
VI-1	Frequency of Occurrence of Priority Pollutants Primary and Secondary Germanium and Gallium Subcategory Raw Wastewater	5289
VI-2	Toxic Pollutants Never Detected	5293

LIST OF TABLES (Continued)

Table	Title	Page
VIII-1	Cost of Compliance for the Primary and Secondary Germanium and Gallium Subcategory Indirect Dischargers	5305
IX-1	BPT Wastewater Discharge Rates for the Primary and Secondary Germanium and Gallium Subcategory	5313
IX-2	BPT Mass Limitations for the Primary and Secondary Germanium and Gallium Subcategory	5314
X-1	BAT Wastewater Discharge Rates for the Primary and Secondary Germanium and Gallium Subcategory	5325
X-2	BAT Mass Limitations for the Primary and Secondary Germanium and Gallium Subcategory	5326
XI-1	NSPS Wastewater Discharge Rates for the Primary and Secondary Germanium and Gallium Subcategory	5333
XI-2	NSPS for the Primary and Secondary Germanium and Gallium Subcategory	5334
XII-1	Pollutant Removal Estimates for Indirect Dischargers Primary and Secondary Germanium and Gallium Subcategory	5341
XII-2	Cost of Compliance for the Primary and Secondary Germanium and Gallium Subcategory	5342
XII-3	PSES and PSNS Wastewater Discharge Rates for the Primary and Secondary Germanium and Gallium Subcategory	5343
XII-4	PSES for the Primary and Secondary Germanium and Gallium Subcategory	5344
XII-5	PSNS for the Primary and Secondary Germanium and Gallium Subcategory	5347

LIST OF FIGURES

Figure	Title	Page
III-1	Primary and Secondary Germanium Production Process	5262
III-2	Primary and Secondary Gallium Production Process	5263
III-3	Geographic Locations of the Primary and Secondary Germanium and Gallium Plants Operating in the United States	5264
IX-1	BPT Treatment Scheme for the Primary and Secondary Germanium an Gallium Subcategory	5318
X-1	BAT Treatment Scheme for Option A	5329
X-2	BAT Treatment Scheme for Option C	5330

THIS PAGE INTENTIONALLY LEFT BLANK

SECTION I

SUMMARY

This document provides the technical basis for promulgating effluent limitations based on best practicable technology (BPT) and best available technology (BAT) for existing direct dischargers, pretreatment standards for existing and for new indirect dischargers (PSES and PSNS)and standards of performance for new sources direct dischargers (NSPS).

The primary and secondary germanium and gallium subcategory consists of 5 plants. One of the five plants discharges to a publicly owned treatment works (POTW), and four achieve zero discharge of process wastewater.

EPA first studied the primary and secondary germanium and gallium subcategory to determine whether differences in raw materials, final products, manufacturing processes, equipment, age and size of plants, and water usage required the development of separate effluent limitations and standards for different segments of the subcategory. This involved a detailed analysis of wastewater discharge and treated effluent characteristics, including the sources and volume of water used, the processes used, the sources of pollutants and wastewaters in the plant, and the constituents of wastewaters, including toxic pollutants. As a result, six subdivisions have been identified for this subcategory that warrant separate effluent limitations. These include:

- o Still liquor,
- o Chlorinator wet air pollution control,
- o Germanium hydrolysis filtrate,
- o Acid wash and rinse water,
- o Gallium hydrolysis filtrate, and
- o Solvent extraction raffinate.

EPA also identified several distinct control and treatment technologies (end-of-pipe) applicable to the primary and secondary germanium and gallium subcategory. The Agency analyzed both historical and newly generated data on the performance of these technologies, and on their nonwater quality impacts including air quality, solid waste generation, and energy requirements.

Engineering costs were prepared for each of the control and treatment options considered for the subcategory. These costs were then used by the Agency to estimate the impact of implementing the various options on the subcategory. For each control and treatment option that the Agency found to be most effective and technically feasible in controlling the discharge of pollutants, we estimated the number of potential closures, number of employees affected, and impact on price. These results are reported in a separate document entitled the "The Economic

Impact Analysis of Effluent Limitations and Standards for the Nonferrous Metals Manufacturing Industry."

After examining the various treatment technologies, the Agency has selected BPT requirements for the primary and secondary germanium and gallium subcategory based on chemical precipitation and sedimentation (lime and settle) technology. Although there are no existing direct dischargers in this subcategory, BPT is promulgated because it is a necessary base against which pleas for variances can be measured. This action is deemed necessary because wastewaters from germanium and gallium operations which contain significant loadings of toxic pollutants are currently being disposed of in a RCRA permitted surface impoundment. Future modifications to the RCRA standards may result in a discharge from germanium plants. There are no capital or annual costs for BPT in this subcategory because there are no direct dischargers.

EPA is promulgating BAT limitations for this subcategory based on chemical precipitation and sedimentation technology. BAT is equivalent to BPT technology. Although there are no existing direct dischargers in this subcategory, BAT is promulgated for any existing zero discharger who, at some point in the future, elects to discharge. This action was deemed necessary because wastewaters from germanium and gallium operations which contain significant loadings of toxic pollutants are currently being disposed of in a RCRA permitted surface impoundment. There are no capital or annual costs for BAT in this subcategory because there are no direct dischargers.

NSPS are equivalent to the BAT mass limitations. In selecting NSPS, EPA recognizes that new plants have the opportunity to implement the best and most efficient manufacturing processes and treatment technology. As such, the technology basis of BAT has been determined as the best demonstrated technology.

The technology basis for PSES is equivalent to BAT. To meet the pretreatment standards for existing sources, the primary and the secondary germanium and gallium subcategory is estimated to incur a capital cost of $24,600 and an annual cost of $20,300. For PSNS, the Agency selected end-of-pipe treatment equivalent to NSPS.

The best conventional technology (BCT) replaces BAT for the control of conventional pollutants. BCT is not being promulgated because the methodology for BCT has not yet been finalized. The mass limitations and standards for BPT, BAT, NSPS, PSES, and PSNS are presented in Section II.

SECTION II

CONCLUSIONS

EPA has divided the primary and secondary germanium and gallium subcategory into six subdivisions for the purpose of effluent limitations and standards. These subdivisions are:

(a) Still liquor,
(b) Chlorinator wet air pollution control,
(c) Germanium hydrolysis filtrate,
(d) Acid wash and rinse water,
(e) Gallium hydrolysis filtrate, and
(f) Solvent extraction raffinate.

BPT is promulgated based on the performance achievable by the application of chemical precipitation and sedimentation (lime and settle) technology. The following BPT effluent limitations are promulgated:

(a) Still Liquor BPT

Pollutant or Pollutant Property	Maximum for Any One Day	Maximum for Monthly Average
	mg/kg (lb/million lbs) of germanium chlorinated	
Arsenic	131.700	58.590
Lead	26.460	12.600
Zinc	91.980	38.430
Fluoride	2,205.000	1,254.000
TSS	2,583.000	1,229.000
pH	Within the range of 7.5 to 10.0 at all times	

(b) Chlorinator Wet Air Pollution Control BPT

Pollutant or Pollutant Property	Maximum for Any One Day	Maximum for Monthly Average
	mg/kg (lb/million lbs) of germanium chlorinated	
Arsenic	27.530	12.250
Lead	5.531	2.634
Zinc	19.230	8.034
Fluoride	461.000	262.100
TSS	540.000	256.800
pH	Within the range of 7.5 to 10.0 at all times	

(c) Germanium Hydrolysis Filtrate BPT

Pollutant or Pollutant Property	Maximum for Any One Day	Maximum for Monthly Average
	mg/kg (lb/million lbs) of germanium hydrolyzed	
Arsenic	39.440	17.550
Lead	7.925	3.774
Zinc	27.550	11.510
Fluoride	660.500	375.500
TSS	773.700	368.000
pH	Within the range of 7.5 to 10.0 at all times	

(d) Acid Wash and Rinse Water BPT

Pollutant or Pollutant Property	Maximum for Any One Day	Maximum for Monthly Average
	mg/kg (lb/million lbs) of germanium washed	
Arsenic	325.500	144.800
Lead	65.400	31.140
Zinc	227.400	94.990
Fluoride	5,450.000	3.099.000
TSS	6,385.000	3,037.000
pH	Within the range of 7.5 to 10.0 at all times	

(e) Gallium Hydrolysis Filtrate BPT

Pollutant or Pollutant Property	Maximum for Any One Day	Maximum for Monthly Average
	mg/kg (lb/million lbs) of gallium hydrolyzed	
Arsenic	70.450	31.350
Lead	14.160	6.742
Zinc	49.220	20.560
Fluoride	1,180.000	670.800
TSS	1,382.000	657.300
pH	Within the range of 7.5 to 10.0 at all times	

f) Solvent Extraction Raffinate BPT

Pollutant or Pollutant Property	Maximum for Any One Day	Maximum for Monthly Average
mg/kg (lb/million lbs) of gallium produced by solvent extraction		
Arsenic	39.330	17.500
Lead	7.904	3.764
Zinc	27 480	11.480
Fluoride	658.700	374.500
TSS	771.600	367.000
pH	Within the range of 7.5 to 10.0 at all times	

EPA is promulgating BAT for the primary and secondary germanium and gallium subcategory, based on the performance achievable by the application of chemical precipitation and sedimentation (lime and settle) technology. The following BAT effluent limitations are promulgated:

(a) Still Liquor BAT

Pollutant or Pollutant Property	Maximum for Any One Day	Maximum for Monthly Average
mg/kg (lb/million lbs) of germanium chlorinated		
Arsenic	131.700	58.590
Lead	26.460	12.600
Zinc	91.980	38.430
Fluoride	2,205.000	1,254.000

(b) Chlorinator Wet Air Pollution Control BAT

Pollutant or Pollutant Property	Maximum for Any One Day	Maximum for Monthly Average
mg/kg (lb/million lbs) of germanium chlorinated		
Arsenic	27.530	12.Z20
Lead	5.531	2.634
Zinc	19.230	8.034
Fluoride	461.000	262.100

(c) Germanium Hydrolysis Filtrate BAT

Pollutant or Pollutant Property	Maximum for Any One Day	Maximum for Monthly Average
mg/kg (lb/million lbs) of germanium hydrolyzed		
Arsenic	39.440	17.550
Lead	7.925	3.774
Zinc	27.550	11.510
Fluoride	660.500	375.500

(d) Acid Wash and Rinse Water BAT

Pollutant or Pollutant Property	Maximum for Any One Day	Maximum for Monthly Average
mg/kg (lb/million lbs) of germanium washed		
Arsenic	325.500	144.800
Lead	65.400	31.140
Zinc	227.400	94.990
Fluoride	5,450.000	3,099.000

(e) Gallium Hydrolysis Filtrate BAT

Pollutant or Pollutant Property	Maximum for Any One Day	Maximum for Monthly Average
mg/kg (lb/million lbs) of gallium hydrolyzed		
Arsenic	70.450	31.350
Lead	14.160	6.742
Zinc	49.220	20.560
Fluoride	1,180.000	670.800

(f) Solvent Extraction Raffinate BAT

Pollutant or Pollutant Property	Maximum for Any One Day	Maximum for Monthly Average
mg/kg (lb/million lbs) of gallium produced by solvent extraction		
Arsenic	39.330	17.500
Lead	7.904	3.764
Zinc	27.480	11.480
Fluoride	658.700	374.500

EPA is promulgating NSPS for the primary and secondary germanium and gallium subcategory based on the performance achievable by the application of chemical precipitation and sedimentation (lime and settle) technology. The following effluent standards for new sources are promulgated:

(a) Still Liquor NSPS

Pollutant or Pollutant Property	Maximum for Any One Day	Maximum for Monthly Average
mg/kg (lb/million lbs) of germanium chlorinated		
Arsenic	131.700	58.590
Lead	26.460	12.600
Zinc	91.980	38.430
Fluoride	2,205.000	1,254.000
TSS	2,583.000	1,229.000
pH	Within the range of 7.5 to 10.0 at all times	

(b) Chlorinator Wet Air Pollution Control NSPS

Pollutant or Pollutant Property	Maximum for Any One Day	Maximum for Monthly Average
mg/kg (lb/million lbs) of germanium chlorinated		
Arsenic	27.530	12.250
Lead	5.531	2.634
Zinc	19.230	8.034
Fluoride	461.000	262.100
TSS	540.500	256.800
pH	Within the range of 7.5 to 10.0 at all times	

(c) Germanium Hydrolysis Filtrate NSPS

Pollutant or Pollutant Property	Maximum for Any One Day	Maximum for Monthly Average
	mg/kg (lb/million lbs) of germanium hydrolyzed	
Arsenic	39.440	17.550
Lead	7.925	3.774
Zinc	27.550	11.510
Fluoride	660.500	375.500
TSS	773.700	368.000
pH	Within the range of 7.5 to 10.0 at all times	

(d) Acid Wash and Rinse Water NSPS

Pollutant or Pollutant Property	Maximum for Any One Day	Maximum for Monthly Average
	mg/kg (lb/million lbs) of germanium washed	
Arsenic	325.500	144.800
Lead	65.400	31.140
Zinc	227.400	94.990
Fluoride	5,450.000	3,099.000
TSS	6,385.000	3,037.000
pH	Within the range of 7.5 to 10.0 at all times	

(e) Gallium Hydrolysis Filtrate NSPS

Pollutant or Pollutant Property	Maximum for Any One Day	Maximum for Monthly Average
	mg/kg (lb/million lbs) of gallium hydrolyzed	
Arsenic	70.450	31.350
Lead	14.160	6.742
Zinc	49.220	20.560
Fluoride	1,180.000	670.800
TSS	1,382.000	657.300
pH	Within the range of 7.5 to 10.0 at all times	

(f) Solvent Extraction Raffinate NSPS

Pollutant or Pollutant Property	Maximum for Any One Day	Maximum for Monthly Average
	mg/kg (lb/million lbs) of gallium produced by solvent extraction	
Arsenic	39.330	17.500
Lead	7.904	3.764
Zinc	27.480	11.480
Fluoride	658.700	374.500
TSS	771.600	367.000
pH	Within the range of 7.5 to 10.0 at all times	

EPA is promulgating PSES for the primary and secondary germanium and gallium subcategory based on the performance achievable by the application of chemical precipitation and sedimentation (lime and settle) technology. The following pretreatment standards for existing sources are promulgated:

(a) Still Liquor PSES

Pollutant or Pollutant Property	Maximum for Any One Day	Maximum for Monthly Average
	mg/kg (lb/million lbs) of germanium chlorinated	
Arsenic	131.700	58.590
lead	26.460	12.600
Zinc	91.980	38.430
Fluoride	2,205.000	1,254.000

(b) Chlorinator Wet Air Pollution Control PSES

Pollutant or Pollutant Property	Maximum for Any One Day	Maximum for Monthly Average
	mg/kg (lb/million lbs) of germanium chlorinated	
Arsenic	27.530	12.250
Lead	5.531	2.634
Zinc	19.230	8.034
Fluoride	461.000	262.100

(c) Germanium Hydrolysis Filtrate PSES

Pollutant or Pollutant Property	Maximum for Any One Day	Maximum for Monthly Average
	mg/kg (lb/million lbs) of germanium hydrolyzed	
Arsenic	39.440	17.550
Lead	7.925	3.774
Zinc	27.550	11.510
Fluoride	660.500	375.500

(d) Acid Wash and Rinse Water PSES

Pollutant or Pollutant Property	Maximum for Any One Day	Maximum for Monthly Average
	mg/kg (lb/million lbs) of germanium washed	
Arsenic	325.500	144.800
Lead	65.400	31.140
Zinc	227.400	94.990
Fluoride	5,450.000	3,099.000

(e) Gallium Hydrolysis Filtrate PSES

Pollutant or Pollutant Property	Maximum for Any One Day	Maximum for Monthly Average
	mg/kg (lb/million lbs) of gallium hydrolyzed	
Arsenic	70.450	31.350
Lead	14.160	6.742
Zinc	49.220	20.560
Fluoride	1,180.000	670.800

(f) Solvent Extraction Raffinate PSES

Pollutant or Pollutant Property	Maximum for Any One Day	Maximum for Monthly Average
mg/kg (lb/million lbs) of gallium produced by solvent extraction		
Arsenic	39.330	17.500
Lead	7.904	3.764
Zinc	27.480	11.480
Fluoride	658.700	374.500

EPA is promulgating PSNS for the primary and secondary germanium and gallium subcategory based on the performance achievable by the application of chemical precipitation and sedimentation (lime and settle) technology. The following pretreatment standards are promulgated for new sources:

(a) Still Liquor PSNS

Pollutant or Pollutant Property	Maximum for Any One Day	Maximum for Monthly Average
mg/kg (lb/million lbs) of germanium chlorinated		
Arsenic	131.700	58.590
Lead	26.460	12.600
Zinc	91.980	38.430
Fluoride	2,205.000	1,254.000

(b) Chlorinator Wet Air Pollution Control PSNS

Pollutant or Pollutant Property	Maximum for Any One Day	Maximum for Monthly Average
mg/kg (lb/million lbs) of germanium chlorinated		
Arsenic	27.530	12.250
Lead	5.531	2.634
Zinc	19.230	8.034
Fluoride	461.000	262.100

(c) Germanium Hydrolysis Filtrate PSNS

Pollutant or Pollutant Property	Maximum for Any One Day	Maximum for Monthly Average
	mg/kg (lb/million lbs) of germanium hydrolyzed	
Arsenic	39.550	17.550
Lead	7.925	3.774
Zinc	27.550	11.510
Fluoride	660.500	375.500

(d) Acid Wash and Rinse Water PSNS

Pollutant or Pollutant Property	Maximum for Any One Day	Maximum for Monthly Average
	mg/kg (lb/million lbs) of germanium washed	
Arsenic	325.500	144.800
Lead	65.400	31.140
Zinc	227.400	94.990
Fluoride	5,450.000	3,099.000

(e) Gallium Hydrolysis Filtrate PSNS

Pollutant or Pollutant Property	Maximum for Any One Day	Maximum for Monthly Average
	mg/kg (lb/million lbs) of gallium hydrolyzed	
Arsenic	70.450	31.350
Lead	14.160	6.742
Zinc	49.220	20.560
Fluoride	1,180.000	670.800

(f) Solvent Extraction Raffinate PSNS

Pollutant or Pollutant Property	Maximum for Any One Day	Maximum for Monthly Average
	mg/kg (lb/million lbs) of gallium produced by solvent extraction	
Arsenic	39.330	17.500
Lead	7.904	3.764
Zinc	27.480	11.480
Fluoride	658.700	374.500

EPA is not promulgating best conventional pollutant control technology (BCT) at this time.

THIS PAGE INTENTIONALLY LEFT BLANK

SECTION III

SUBCATEGORY PROFILE

This section of the primary and secondary germanium and gallium supplement describes the raw materials and processes used in the production of germanium and gallium and presents a profile of the germanium and gallium plants identified in this study.

There are many commercial uses for germanium, including infrared systems (40 percent), fiber optics (15 percent), semiconductors (23 percent), detectors (10 percent), and other uses (12 percent). Because germanium is transparent to infrared light, it is important in germanium lenses and windows which transmit thermal radiation in a manner similar to optical glass transmitting visible light. Germanium based infrared optical components are finding an increasing number of military and commercial applications.

The principal uses of gallium are in electronic applications. High-purity gallium is used in such items as fiber-optic light transmission cables, gallium-based light-emitting diodes and lasers, electronic devices for computers, and research and development in solid-state devices.

DESCRIPTION OF GERMANIUM AND GALLIUM PRODUCTION

Germanium and gallium are produced from both primary and secondary raw materials. Both metals are produced in a similar manner; however, their production processes are treated separately in this study. The germanium production process is presented schematically in Figure III-1 (page 5262) and described below. The gallium production process is presented schematically in Figure III-2 (page 5263). Germanium and gallium production can be divided into four distinct stages: chlorination to tri- or tetra-chlorides, hydrolysis to produce an oxide, reduction to metal, and further purification.

RAW MATERIALS

The primary raw materials for germanium and gallium are residues from primary zinc roasters. Zinc ores in the Kansas-Missouri-Oklahoma and Central Tennessee zinc districts, as well as some foreign zinc ores, contain germanium and gallium. Concentrates typically contain 0.3 to 7 percent germanium and 0.2 to 1 percent gallium. Some facilities also use purchased intermediates such as germanium dioxide or crude gallium metal.

Secondary raw materials for germanium include both low and high-grade scrap. High grade scrap includes cuttings and saw dust from the forming of lenses and windows from pure germanium. Secondary raw materials for gallium include silicon-carbide

abrasives, and glass scrap consisting primarily of gallium arsenide.

GERMANIUM PRODUCTION

Germanium is normally produced using four major steps or processes: chlorination, hydrolysis, reduction to metal, and further purification. Each of these steps is described below:

CHLORINATION

The first step in winning germanium from concentrates and scrap is chlorination with hydrochloric acid or chlorine gas. Chlorination converts germanium to germanium tetrachloride vapors, which are recovered in a condenser. Germanium tetrachloride is a clear, colorless liquid at room temperature. Vapors which pass through the condenser are sent through a wet scrubber which controls acid and chlorine fumes. There are two wastewater sources associated with germanium chlorination, as shown in Figure III-1 (page 5264). Excess hydrochloric acid along with impurities in the raw material which are not vaporized by the chlorination are discharged as still liquor. If gallium is present in the feed materials, it will remain in the still liquor and the still liquor may be used as a raw material for gallium recovery rather than discharged. Additionally, scrubber liquor from the wet scrubber associated with the chlorination still may be discharged.

After converting the germanium in the feed material to the tetrachloride, the germanium tetrachloride is purified using stripping and distillation. Several stripping and distillation processes may occur in series in order to achieve the desired purity.

HYDROLYSIS

Purified germanium tetrachloride is converted to germanium dioxide by hydrolysis with water. The reaction that takes place is:

$$GeCl_4 + 2\ H_2O \longrightarrow GeO_2 + 4\ HCl.$$

After hydrolysis, the insoluble germanium dioxide is separated from the liquid phase by filtration and dried. The hydrolysis filtrate may be discharged as a wastewater stream.

REDUCTION TO METAL

Pure germanium dioxide is reduced to metal in a furnace with a hydrogen atmosphere. The reaction that takes place is:

$$GeO_2 + 2\ H_2 \longrightarrow Ge + 2\ H_2O$$

The germanium dioxide is reduced to germanium metal powder, and

the water formed is vented to the atmosphere. The germanium metal powder is then melted and cooled to produce germanium bars. There are no wastewater sources associated with reducing germanium dioxide to metal, or with subsequent melting and casting to produce germanium ingots or bars.

PURIFICATION

Germanium bars are cleaned by acid washing and purified by zone refining. The bars are washed with a hydrofluoric acid-nitric acid mixture to remove any oxide coating on the bar, and then rinsed with water to remove residual acid. The etched bars are further purified by induction heated zone refining. In this process, impurities are concentrated at one point because the impurities are more soluble in the liquid phase. The germanium bar may be acid washed and zone refined several times in order to achieve the desired purity. The only wastewater source associated with this process is the spent acid and rinse water.

GALLIUM PRODUCTION

Gallium production, shown schematically in Figure III-2 (page 5263), usually consists of four stages; chlorination, hydrolysis, reduction to metal, and further purification. A solvent extraction process can also be used to refine gallium. Each of these stages is described below.

CHLORINATION

Crude gallium or gallium arsenide scrap may be used as feed material for the gallium chlorination process. Hydrochloric acid and chlorine gas are used to convert the gallium to gallium trichloride. Gallium trichloride is purified using a series of distillation steps. No process wastewater is associated with gallium chlorination or purification of gallium trichloride.

HYDROLYSIS

Gallium trichloride from chlorination of crude gallium metal, chlorination of gallium scrap or other chlorination is routed to the hydrolysis process. Water and sodium hydroxide are reacted with gallium trichloride to produce an insoluble gallium hydroxide. The reaction is as follows:

$$GaCl_3 + NaOH + H_2O \text{ ----> } GaOOH + NaCl + 2\ HCl$$

The insoluble gallium solids are separated from the liquid phase by filtration. The hydrolysis filtrate is the only wastewater stream associated with gallium hydrolysis.

REDUCTION TO METAL

Gallium oxide hydroxide is dissolved and electrolyticaly reduced to gallium metal which collects at the cathode. Because gallium metal is a liquid at room temperature with a density

greater than water, it sinks to the bottom of the electrolytic cell. When electrolysis is complete, the residual electrolyte is recycled and the gallium metal is routed to further purification.

PURIFICATION

Electrolytic gallium is washed to remove residual water soluble impurities and further purified by zone crystallization to remove metal soluble impurities. The wash water is recycled to the process. High purity gallium (99.9999+ percent) is produced in this manner. There is no process wastewater associated with crystallization.

SOLVENT EXTRACTION

A solvent extraction process can also be used to recover gallium from gallium scrap. The scrap is first dissolved in acid, and gallium is then extracted from solution into an organic solvent. Gallium is recovered from the solvent and the solvent is reused. The depleted acid or raffinate is the only wastewater stream associated with the solvent extraction process.

PROCESS WASTEWATER SOURCES

Although a variety of processes are involved in primary and secondary germanium and gallium production, the process wastewater sources can be delineated as follows:

1. Still liquor,
2. Chlorinator wet air pollution control,
3. Germanium hydrolysis filtrate,
4. Acid wash and rinse water,
5. Gallium hydrolysis filtrate, and
6. Solvent extraction raffinate.

OTHER WASTEWATER SOURCES

Other wastewaters may be associated with the production of primary and secondary germanium and gallium. These streams may include aspirator water, noncontact cooling water, and equipment and floor wash water. These wastewaters are not considered as a part of this rulemaking. EPA believes that the flows and pollutant loadings associated with these streams are insignificant relative to the wastewater streams selected and are best handled by the appropriate permit authority on a case-by-case basis under authority of Section 402 of the CWA.

AGE, PRODUCTION, AND PROCESS PROFILE

Figure III-3 (page 5264) shows the location of the five primary and secondary germanium and gallium plants operating in the United States. One plant is located in Pennsylvania, two are in the Oklahoma-Texas region, and two are in the far western part of the country. Germanium and gallium plants are

usually located near sources of raw materials, either zinc ore deposits, or major electronics manufacturing.

Table III-1 (page 5260) shows the initial operating year for the plants in this subcategory by discharge type. All of the plants were built within the last twenty-five years, with two built within the last three years. The average plant age is 12 years. Table III-2 (page 5261) lists the various unit operations in this subcategory, and shows the number of plants with that process and the number of plants generating wastewater.

Table III-1

INITIAL OPERATING YEAR (RANGE) SUMMARY OF PLANTS IN THE PRIMARY AND SECONDARY GERMANIUM AND GALLIUM SUBCATEGORY BY DISCHARGE TYPE

	Initial Operating Year (Range) (Plant Age in Years)				
Type of Plant	1983-1973 (0-10)	1972-1968 (11-15)	1967-1958 (16-25)	1957-1948 (26+)	Total
Direct	0	0	0	0	0
Indirect	1	0	0	0	1
Zero	1	1	2	0	4
Total	2	1	2	0	5

Table III-3

SUMMARY OF SUBCATEGORY PROCESSES AND ASSOCIATED WASTE STREAMS

Process or Waste Stream	Number of Germanium and Gallium Plants with Process or Waste Stream	Number of Plants Reporting Generation of Wastewater*
Chlorination	3	
Still liquor	2	2
Wet air pollution	2	2
Hydrolysis	3	
Germanium filtrate	2	2
Gallium filtrate	2	2
Reduction to metal (dry)	4	
Purification	4	
Acid wash and rinse water	3	3
Ga solvent extraction	1	
raffinate	1	1

*Through reuse or evaporation practices, a plant may "generate" a wastewater from a particular process but not discharge it.

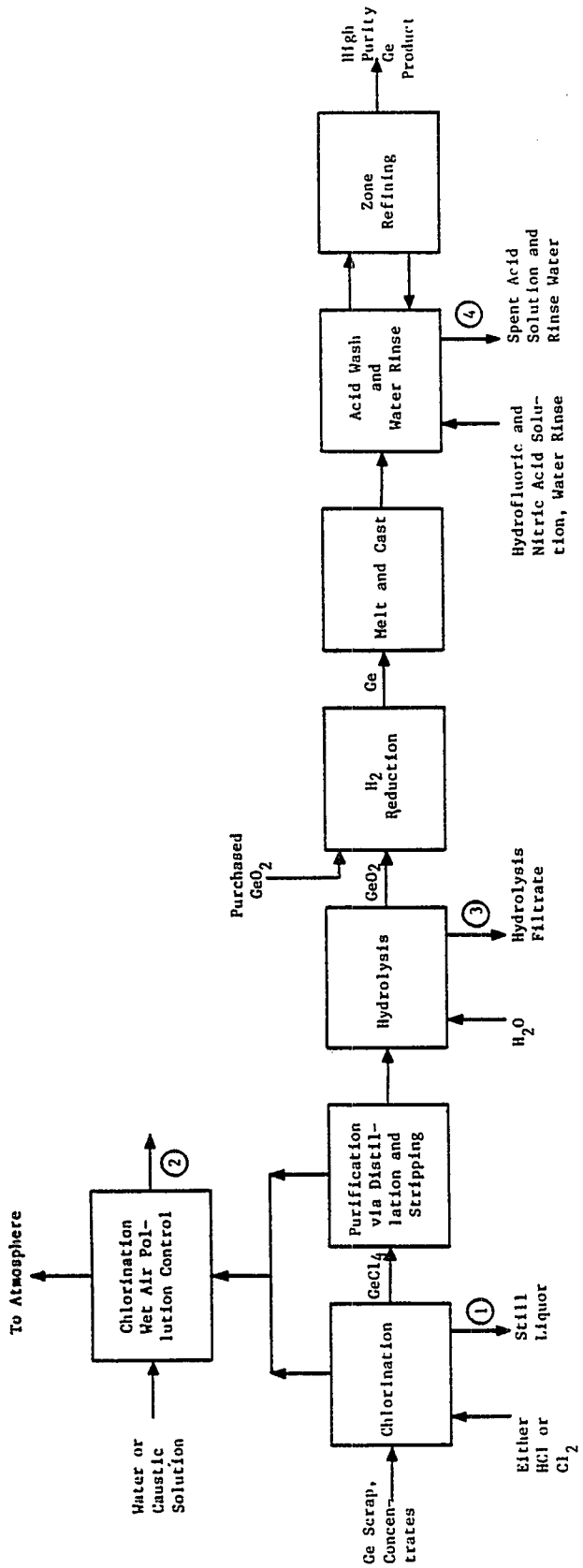

Figure III-1

PRIMARY AND SECONDARY GERMANIUM PRODUCTION PROCESS

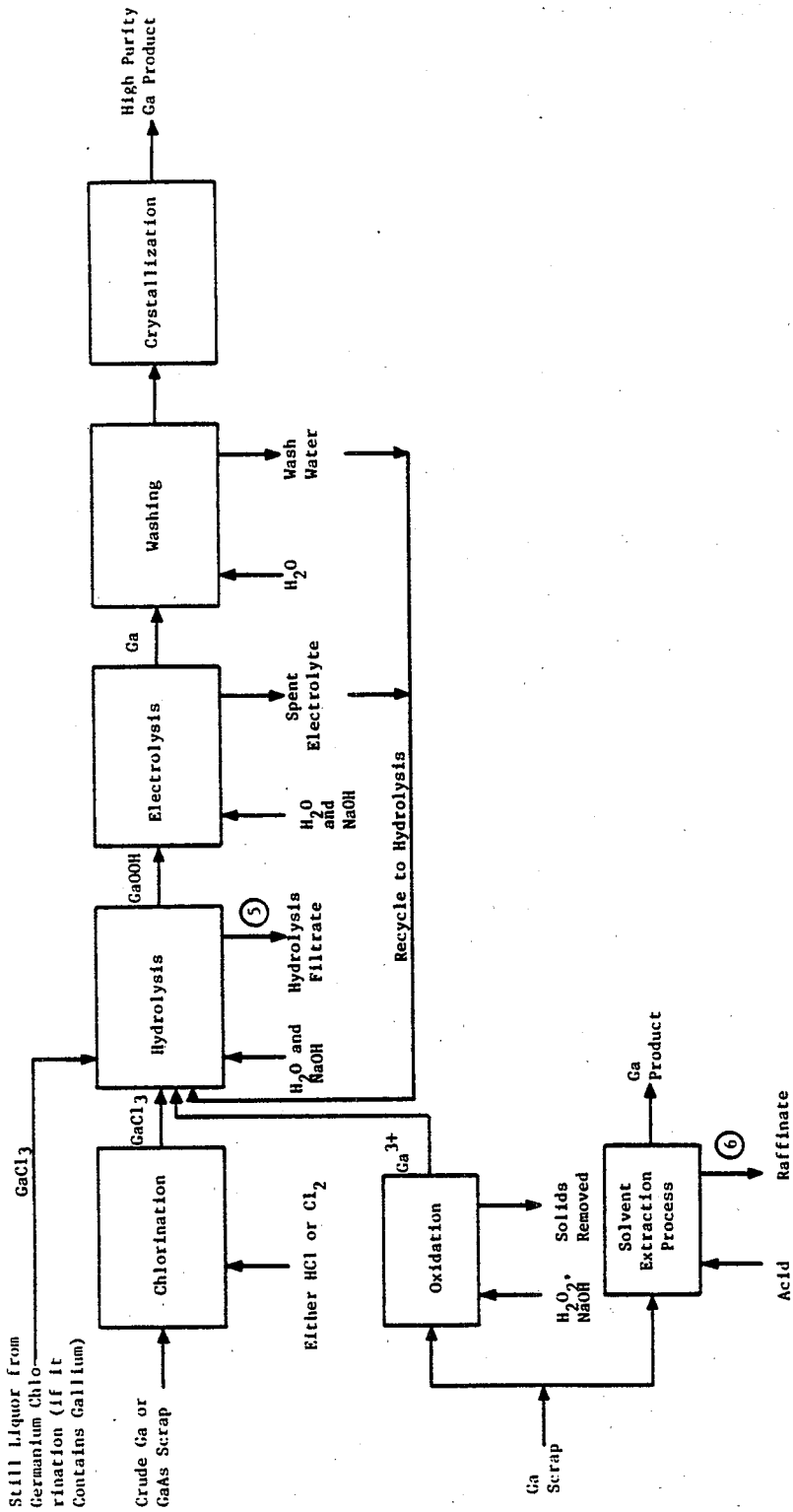

Figure III-2

PRIMARY AND SECONDARY GALLIUM PRODUCTION PROCESS

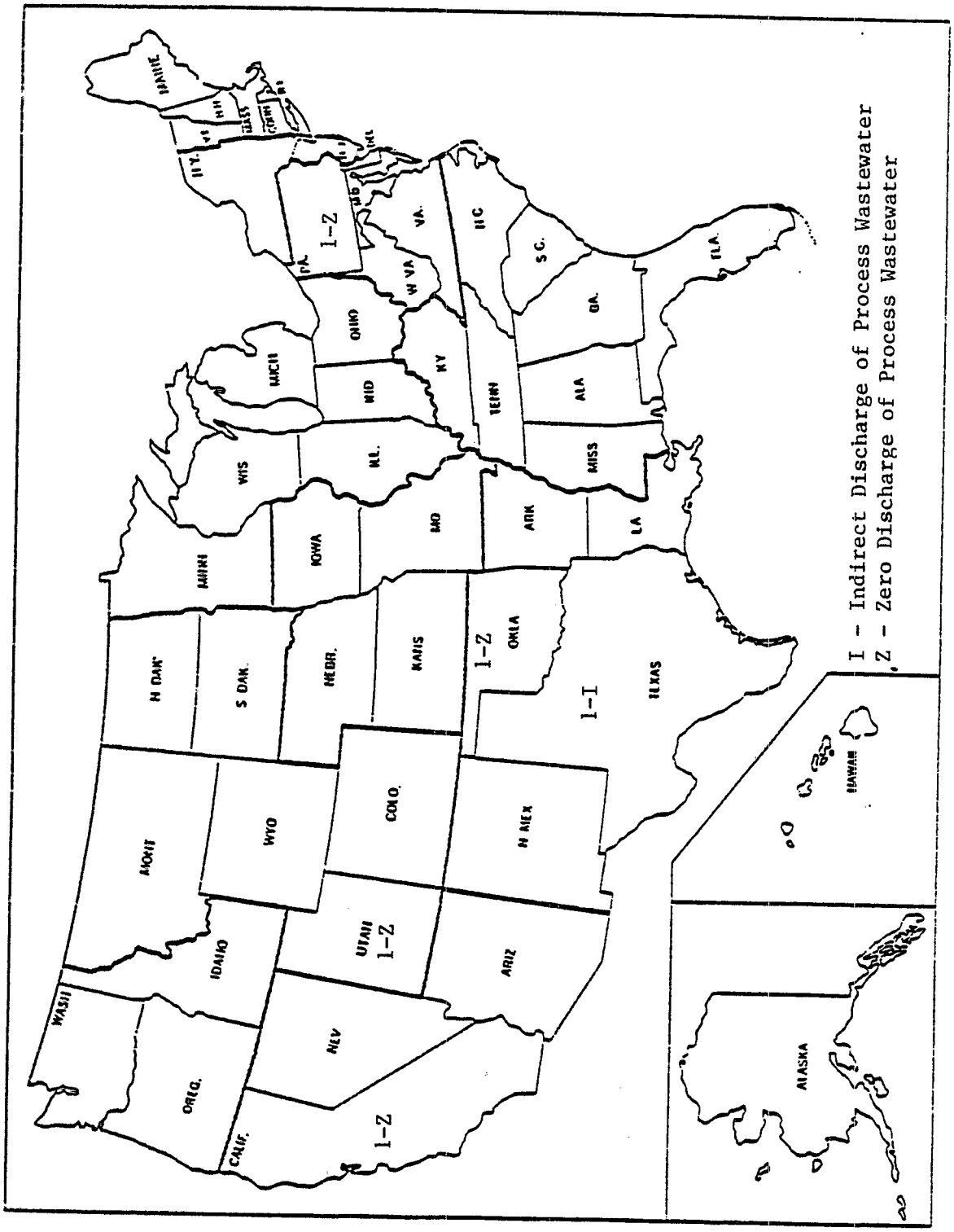

Figure III-3

GEOGRAPHIC LOCATIONS OF THE PRIMARY AND SECONDARY GERMANIUM AND GALLIUM PLANTS OPERATING IN THE UNITED STATES

SECTION IV

SUBCATEGORIZATION

This section summarizes the factors considered during the designation of the related subdivisions of the primary and secondary germanium and gallium subcategory. Production normalizing parameters for each subdivision are also discussed.

FACTORS CONSIDERED IN SUBDIVIDING THE PRIMARY AND SECONDARY GERMANIUM AND GALLIUM SUBCATEGORY

The factors listed previously for general subcategorization were each evaluated when considering subdivision of the primary and secondary germanium and gallium subcategory. In the discussion that follows, the factors will be discussed as they pertain to this particular subcategory.

The rationale for considering subdivision of the primary and secondary germanium and gallium subcategory is based primarily on differences in the production processes and raw materials used within this subcategory. A number of different operations are performed, which may or may not have a water use or discharge, and which may require the establishment of separate effluent limitations. While primary and secondary germanium and gallium is still considered a single subcategory, a more thorough examination of the production processes has illustrated the need for limitations and standards based on a specific set of waste streams. Limitations will be based on specific flow allowances for the following subdivisions or building blocks:

1. Still liquor,
2. Chlorinator wet air pollution control,
3. Germanium hydrolysis filtrate,
4. Acid wash and rinse water,
5. Gallium hydrolysis filtrate, and
6. Solvent extraction raffinate.

These subdivisions follow directly from differences within the distinct production stages of germanium and gallium chlorination, hydrolysis, reduction to metal, and further purification.

Chlorination of germanium concentrate or scrap to produce germanium tetrachloride results in the first two subdivisions still liquor and chlorination wet air pollution control. Still liquor contains impurities present in the raw material as well as excess hydrochloric acid used to chlorinate the germanium. After recovering germanium tetrachloride, the acid fumes are scrubbed with a water or caustic scrubber. This creates the

need for the chlorination wet air pollution control subdivision.

Hydrolysis of germanium tetrachloride to germanium dioxide, and gallium trichloride to a gallium hydroxide, results in two more subdivisions germanium hydrolysis filtrate, and gallium hydrolysis filtrate. Both hydrolysis products, germanium dioxide and gallium hydroxide, are produced as solids which are separated from the liquid phase by filtration. Both germanium and gallium hydrolysis filtrates may be discharged as wastewater streams.

After germanium dioxide is reduced to metal, it may be washed with hydrofluoric acid and nitric acid, and then rinsed with water. The wash and rinse water may be discharged, and this creates the need for another subdivision acid wash and rinse water.

Gallium can be recovered from some scrap by a solvent extraction process. In this process, scrap is dissolved in acid and then recovered into an organic solvent. The spent acid may be discharged. The solvent extraction raffinate gives rise to the last subdivision.

OTHER FACTORS

The other factors considered in this evaluation were shown to be inappropriate as a basis for subdivision. Air pollution control methods, treatment costs, and total energy requirements are functions of the selected subcategorization factors -- metal product, raw materials, and production processes. Therefore, they are not independent factors and do not affect the subcategorization which has been applied. As discussed in Section IV of the General Development Document, certain other factors, such as plant age, plant size, and the number of employees, were also evaluated and determined to be inappropriate for use as bases for subdivision of nonferrous metals plants.

PRODUCTION NORMALIZING PARAMETERS

As discussed previously, the effluent limitations and standards developed in this document establish mass limitations on the discharge of specific pollutant parameters. To allow these regulations to be applied to plants with various production capacities, the mass of pollutant discharged must be related to a unit of production. This factor is known as the production normalizing parameter (PNP).

In general, for each production process which has a wastewater associated with it, the actual mass of germanium and gallium product or intermediate will be used as the PNP. Thus, the PNPs for the six subdivisions are as follows:

Subdivision	PNP
1. Still liquor	germanium chlorinated
2. Chlorinator wet air pollution control	germanium chlorinated
3. Germanium hydrolysis filtrate	germanium hydrolyzed
4. Acid wash and rinse water	germanium washed
5. Gallium hydrolysis filtrate	gallium hydrolyzed
6. Solvent extraction raffinate	gallium produced by solvent extraction

Other PNPs were considered. The use of production capacity instead of actual production was eliminated from consideration because the mass of the pollutant produced is more a function of true production than of installed capacity. The use of some common intermediate (i.e., germanium tetrachloride or gallium trichloride) as a basis for PNPs for all processes was rejected since not all plants follow the same production path to get to the specific end-product. Additionally, some plants divert part of their intermediate products (e.g., germanium dioxide) and sell them as by-products instead of processing all input raw materials to one final product. If an "end-product" were chosen as the PNP, plants that had these upstream diversions would be allowed to discharge more per mass of product than their competitors who did not.

THIS PAGE INTENTIONALLY LEFT BLANK

SECTION V

WATER USE AND WASTEWATER CHARACTERISTICS

This section describes the characteristics of the wastewaters associated with the primary and secondary germanium and gallium subcategory. Data used to characterize the wastewaters are presented. Finally, the specific source, water use and discharge flows, and wastewater characteristics for each separate wastewater source are discussed.

The two principal data sources used are data collection portfolios (dcp) and field sampling results. Data collection portfolios contain information regarding wastewater flows and production levels.

In order to quantify the pollutant discharge from germanium and gallium plants, a field sampling program was conducted prior to proposal. A complete list of pollutants considered and a summary of the techniques used in sampling and laboratory analyses are included in Section V of Vol. I. Samples were analyzed for 124 of the 126 priority pollutants and other pollutants deemed appropriate. Because the analytical standard for TCDD was judged to be too hazardous to be made generally available, samples were never analyzed for this pollutant. Samples were also never analyzed for asbestos. There is no reason to expect that TCDD or asbestos would be present in nonferrous metals manufacturing wastewater. A total of two plants were selected for sampling in the primary and secondary germanium and gallium subcategory. In general, the samples were analyzed for three classes of pollutants: toxic organic pollutants, toxic metal pollutants, and criteria pollutants (which includes both conventional and nonconventional pollutants).

After proposal, EPA gathered additional wastewater sampling data for four subdivisions in this subcategory. These data were acquired through a self sampling program undertaken at the specific request of EPA. The data include analyses for the toxic metals antimony, arsenic, cadmium, chromium, copper, lead, nickel, selenium, silver, thallium and zinc. The data also include analyses for the nonconventional pollutants fluoride, germanium and gallium. These data presented in Table V-7 (page 5281), show pollutant concentrations similar to those indicated by the data which EPA had acquired for these subdivisions prior to proposal. The data also support the assumptions which EPA had made concerning the presence and concentrations of pollutants in those subdivisions where we did not have analytical data for specific pollutants. For this reason, the selection of pollutant parameters for limitation in this subcategory (Section VI) has not been revised based on this new data.

As described in Section IV of this supplement, the primary and secondary germanium and gallium subcategory has been divided into six subdivisions or wastewater sources, so that the promulgated regulation contains mass discharge limitations and standards for six unit processes discharging process wastewater. Differences in the wastewater characteristics associated with these subdivisions are to be expected. For this reason, wastewater streams corresponding to each subdivision are addressed separately in the discussions that follow. These wastewater sources are:

1. Still liquor,
2. Chlorinator wet air pollution control,
3. Germanium hydrolysis filtrate,
4. Acid wash and rinse water,
5. Gallium hydrolysis filtrate, and
6. Solvent extraction raffinate.

WASTEWATER FLOW RATES

Data supplied by dcp responses were evaluated, and two flow-to-production ratios, water use and wastewater discharge were calculated for each stream. The two ratios are differentiated by the flow value used in calculation. Water use is defined as the volume of water or other fluid required for a given process. Wastewater flow discharged after pretreatment or recycle (if these are present) is used in calculating the production normalized flow--the volume of wastewater discharged from a given process to further treatment, disposal, or discharge per mass of germanium and gallium produced. Differences between the water use and wastewater flows associated with a given stream result from recycle, evaporation, and carry-over on the product. The production values used in calculation correspond to the production normalizing parameter, PNP, assigned to each stream, as outlined in Section IV. As an example, chlorinator scrubber water flow is related to the production of germanium chlorinated. As such, the discharge rate is expressed in liters of scrubber water per metric ton of germanium chlorinated (gallons of scrubber water per ton of germanium chlorinated).

The production normalized discharge flows were compiled and statistically analyzed by stream type. These production normalized water use and discharge flows are presented by subdivision in Tables V-1 through V-6 (pages 5275 - 5280). Where appropriate, an attempt was made to identify factors that could account for variations in water use and discharge rates. These variations are discussed later in this section by subdivision. A similar analysis of factors affecting the wastewater flows is presented in Sections IX, X, XI, and XII where representative BPT, BAT, NSPS, and pretreatment flows are selected for use in calculating the effluent limitations.

The water use and discharge rates shown do not include nonprocess wastewater, such as rainfall runoff and noncontact cooling water.

WASTEWATER CHARACTERISTICS DATA

Data used to characterize the various wastewaters associated with germanium and gallium production come from two sources--data collection portfolios and analytical data from field sampling trips.

DATA COLLECTION PORTFOLIOS

In the data collection portfolios, the germanium and gallium plants that discharge wastewater were asked to specify the presence of priority pollutants in their wastewater. No plant indicated that any priority organic pollutants were present in their wastewater. However, two of the three responding plants stated that they either knew priority metal pollutants to be present or they believed priority metal pollutants to be present. The responses for the priority metals are summarized below[1]":

Pollutant	Known Present	Believed Present
Antimony	1	1
Arsenic	1	1
Beryllium	0	0
Cadmium	0	0
Chromium	0	1
Copper	0	1
Lead	0	0
Mercury	0	0
Nickel	0	1
Selenium	1	1
Silver	0	0
Thallium	0	0
Zinc	0	0

[1]Two plants were omitted due to lack of data.

FIELD SAMPLING DATA

In order to quantify the concentrations of pollutants present in wastewater from primary and secondary germanium and gallium plants, wastewater samples were collected at two plants. Both of these facilities claimed the analytical data collected to be confidential and therefore these data are not presented in this document. Diagrams and tabulated information usually included to describe these operations are also omitted for this same reason.

Several points regarding these tables should be noted. First, the data tables include some samples measured at concentrations considered not quantifiable. The base-neutral extractable, acid extractable, and volatile organics generally are considered not quantifiable at concentrations equal to or less than 0.010 mg/l.

Below this concentration organic analytical results are not quantitatively accurate; however, the analyses are useful to indicate the presence of a particular pollutant. The pesticide fraction is considered not quantifiable at concentrations equal to or less than 0.005 mg/l.

Second, the detection limits shown on the data tables for priority metals and conventional and nonconventional pollutants are not the same in all cases as the published detection limits for these pollutants by the same analytical methods. The detection limits used were reported with the analytical data and hence are the appropriate limits to apply to the data. Detection limit variation can occur as a result of a number of laboratory-specific, equipment-specific, and operator specific factors. These factors can include day-to-day differences in machine calibration, variation in stock solutions, and variation in operators.

Third, the statistical analysis of data includes some samples measured at concentrations considered not quantifiable. For data considered as detected but below quantifiable concentrations, a value of zero is used for averaging. Priority organic, nonconventional, and conventional pollutant data reported with a "less than" sign are considered as detected, but not further quantifiable. A value of zero is also used for averaging. If a pollutant is reported as not detected, it is assigned a value of zero in calculating the average. Finally, priority metal values reported as less than a certain value were considered as not quantifiable, and consequently were assigned a value of zero in the calculation of the average.

Finally, appropriate source water concentrations are presented with the summaries of the sampling data. The method by which each sample was collected is indicated by number, as follows:

1 - One-time grab

2 - Manual composite during intermittent process operation

3 - 8-hour manual composite

4 - 8-hour automatic composite

5 - 24-hour manual composite

6 - 24-hour automatic composite

WASTEWATER CHARACTERISTICS AND FLOWS BY SUBDIVISION

Since primary and secondary germanium and gallium production involves six principal sources of wastewater and each has potentially different characteristics and flows, the wastewater

characteristics and discharge rates corresponding to each subdivision will be described separately. A brief description of why the associated production processes generate a wastewater and explanations for variations of water use within each subdivision will also be discussed.

STILL LIQUOR

All of the plants which chlorinate germanium raw materials generate a still liquor. The production normalized water use and discharge rates for still liquor are given in Table V-1 (page 5275) in liters per metric ton of germanium chlorinated. Still liquor can be characterized by treatable concentrations of arsenic, nickel, zinc and germanium, suspended solids, and acidic pH. Additional data for this stream collected after proposal confirm this characterization.

CHLORINATOR WET AIR POLLUTION CONTROL

All of the plants which chlorinate germanium raw materials use a wet scrubbing system for the control of HCl and Cl_2 fumes. No plant reporting this stream practices recycle of this water. Table V-2 (page 5276) presents the production normalized water use and discharge flows for chlorinator scrubber water in liters per metric ton of germanium chlorinated. This water is characterized by treatable concentrations of cadmium, lead, nickel, germanium, suspended solids, and an alkaline pH.

GERMANIUM HYDROLYSIS FILTRATE

Germanium tetrachloride is hydrolyzed to germanium dioxide by adding water. Germanium dioxide solids are separated from the liquid phase by filtration, and the filtrate may be discharged. Production normalized water use and discharge rates for this waste stream are presented in Table V-3 (page 5277), in liters per metric ton of germanium hydrolyzed. This stream contains treatable concentrations of nickel and germanium.

ACID WASH AND RINSE WATER

Germanium ingots or bars are washed with an $HF-HNO_3$ mixture and then rinsed with water to remove the residual acid from the bar. The spent acid and rinse water are discharged as a wastewater stream. The production normalized water use and discharge rates are presented in Table V-4 (page 5278), in liters per metric ton of germanium washed. Sampling data for this wastewater stream show that this stream contains treatable concentrations of lead, germanium and fluoride.

GALLIUM HYDROLYSIS FILTRATE

Gallium trichloride is hydrolyzed to an insoluble gallium hydroxide by adding water and sodium hydroxide. Gallium oxide hydroxide solids are separated from the waste solution by filtration, and the filtrate may be discharged. Production

normalized water use and discharge rates for this waste stream are presented in Table V-5 (page 5279), in liters per metric ton of gallium hydrolyzed. This wastewater stream contains toxic metals, particularly arsenic, and suspended solids above treatable concentrations.

SOLVENT EXTRACTION RAFFINATE

Gallium is recovered from gallium arsenide scrap by a solvent extraction process. In this process, scrap is dissolved in acid, and gallium is extracted from the acid into an organic phase. Gallium is then recovered from the organic phase. The spent acid or raffinate is discharged as a wastewater stream. Production normalized water use and discharge rates for solvent extraction raffinate are shown in Table V-6 (page 5280). This wastewater stream was not sampled, however, it is expected to have similar characteristics to gallium hydrolysis filtrate and should be characterized by toxic metals, particularly arsenic, and suspended solids above treatable concentrations.

Table V-1

WATER USE AND DISCHARGE RATES FOR STILL LIQUOR

(l/kkg of Germanium Chlorinated)

Plant Code	Percent Recycle or Reuse	Production Normalized Water Use Flow	Production Normalized Discharge Flow
1140	0	NR	NR
1168	0	63,000	63,000

Table V-2

WATER USE AND DISCHARGE RATES FOR CHLORINATOR WET AIR POLLUTION CONTROL

(l/kkg of Germanium Chlorinated)

Plant Code	Percent Recycle or Reuse	Production Normalized Water Use Flow	Production Normalized Discharge Flow
1140	0	13,170	13,170
1168	0	NR	NR

Table V-3

WATER USE AND DISCHARGE RATES FOR GERMANIUM HYDROLYSIS FILTRATE

(l/kkg of Germanium Hydrolyzed)

Plant Code	Percent Recycle or Reuse	Production Normalized Water Use Flow	Production Normalized Discharge Flow
1140	0	18,870	18,870
1168	0	NR	NR

Table V-4

WATER USE AND DISCHARGE RATES FOR ACID WASH AND RINSE WATER

(l/kkg of Germanium Washed)

Plant Code	Percent Recycle or Reuse	Production Normalized Water Use Flow	Production Normalized Discharge Flow
1116	0	155,720	155,720
1140	0	24.7*	24.7*
1168	0	NR	NR

*Acid wash only - does not include rinse water.

Table V-5

WATER USE AND DISCHARGE RATES FOR GALLIUM HYDROLYSIS FILTRATE

(l/kkg of Gallium Hydrolyzed)

Plant Code	Percent Recycle or Reuse	Production Normalized Water Use Flow	Production Normalized Discharge Flow
1168	0	37,850	37,850
1180	0	29,570	29,570

Table V-6

WATER USE AND DISCHARGE RATES FOR SOLVENT EXTRACTION RAFFINATE

(l/kkg of Gallium Produced by Solvent Extraction)

Plant Code	Percent Recycle or Reuse	Production Normalized Water Use Flow	Production Normalized Discharge Flow
1181	0	18,820	18,820

TABLE V-7

PRIMARY AND SECONDARY GERMANIUM SAMPLING DATA
RAW WASTEWATER DATA FROM SELF-SAMPLING

POLLUTANT	Concentration (mg/l)			
Sample Number	88154	88155	88156	88157
Toxic Pollutants				
114. antimony	<0.030	<0.020	<0.010	0.044
115. arsenic	1.700	<0.100	<0.200	0.390
117. beryllium	<0.050	<0.050	<0.050	<0.050
118. cadmium	0.230	0.460	<0.050	<0.050
119. chromium	<0.500	<0.500	<0.500	<0.500
120. copper	0.160	0.200	<0.100	<0.100
122. lead	<0.200	0.450	<0.200	0.780
124. nickel	2.000	1.800	1.000	<0.200
125. selenium	0.089	0.036	0.116	<0.005
126. silver	<0.001	0.0026	0.0022	0.066
127. thallium	0.011	0.015	0.024	<0.010
128. zinc	150.000	0.170	<0.050	0.060
Nonconventional Pollutants				
aluminum	1.500	4.100	0.780	350.000
cobalt	<0.500	<0.500	<0.500	<0.500
gallium	<0.200	<0.200	<0.200	<0.200
germanium	31.000	470.000	950.000	454.000
iron	1.800	11.000	0.370	2.900
fluoride				40000.000
manganese	2.200	0.250	<0.050	0.090
molybdenum	<0.500	<0.500	0.520	<0.500
tin	<5.000	<5.000	<5.000	<5.000
titanium	<2.000	2.000	<2.000	<3.000
vanadium	<1.000	<1.000	<1.000	<1.000

88154 = Still Liquor
88155 = Chlorinator Wet Air Pollution Control

88156 = Germanium Hydrolysis Filtrate
88157 = Acid Wash and Rinse Water

THIS PAGE INTENTIONALLY LEFT BLANK

SECTION VI

SELECTION OF POLLUTANT PARAMETERS

This section examines the chemical analysis data presented in Section V and discusses the selection or exclusion of priority pollutants for potential limitation. The discussion that follows presents and briefly discusses the selection of conventional and nonconventional pollutants for effluent limitations. Also described is the analysis that was performed to select or exclude toxic pollutants for further consideration for limitations and standards. Pollutants will be considered for limitation if they are present in concentrations treatable by the technologies considered in this analysis. The treatable concentrations used for the toxic metals were the long-term performance values achievable by chemical precipitation, sedimentation, and filtration. The treatable concentrations used for the toxic organics were the long-term performance values achievable by carbon adsorption.

CONVENTIONAL AND NONCONVENTIONAL POLLUTANT PARAMETERS SELECTED

As part of this study, the Agency examined samples for two conventional pollutant parameters (total suspended solids and pH) and the nonconventional pollutants fluoride, gallium and germanium. At proposal, the Agency had selected germanium for limitation in this subcategory. On March 18, 1985, the Agency published a notice of data availability which stated that EPA was also considering regulating gallium in this subcategory.

The conventional and nonconventional pollutants or pollutant parameters selected for limitation in the subcategory are:

fluoride
total suspended solids (TSS)
pH

Fluoride was detected in acid wash and rinse wastewater at a concentration of 40,000 mg/l. This concentration is significantly higher than the concentration of fluoride which is achievable with identified treatment technology (14.5 mg/l). For this reason, fluoride is selected for limitation in this subcategory. The source of fluoride in this wastewater is hydrofluoric acid which is used to wash germanium bars.

Neither germanium nor gallium is not selected for limitation in this subcategory. The Agency proposed to limit germanium because it was expected to be present in the raw wastewater. Germanium and gallium were proposed for regulation but the Agency has decided to not regulate these pollutants at promulgation because they are expected to be controlled by the BPT technology. However, it is possible that these pollutants may be present in large concentrations at an individual plant.

the wastewater. Therefore, benzene is not considered for regulation.

Therefore, the permitting or control authority may establish specific limitations for these metals on a case-by-case basis.

PRIMARY AND SECONDARY GERMANIUM AND GALLIUM SUBCATEGORY SECT - VI

Hexachlorobenzene was detected in the one sample for which it was analyzed at a concentration of 0.011 mg/l. Although this value is above the concentration achievable by identified treatment technology (0.01 mg/l), it is below the concentration of hexachlorobenzene in the source water at the plant where the sample was taken (0.26 mg/l). Also, hexachlorobenzene is not expected to be present in the wastewater based on the raw materials and production processes used. For these reasons, hexachlorobenzene is not considered for limitation.

Methylene chloride was detected in the one sample for which it was analyzed at a concentration treatable by identified treatment technology (0.01 mg/l). However, methylene chloride is not attributable to specific materials or processes associated with germanium and gallium production, but is a common solvent used in analytical laboratories. No germanium and gallium plants believed this pollutant was present in their wastewater. For these reasons, methylene chloride is not considered for limitation.

Cyanide was detected in the one sample for which it was analyzed at a concentration of 0.069 mg/l. This concentration exceeds that which is attainable by identified treatment technology (0.047/l). However, cyanide cannot be attributed to any raw material or production process associated with the germanium and gallium subcategory, and is not expected to be present in any wastewater from these industries. Therefore, cyanide is not considered for limitation.

TOXIC POLLUTANTS SELECTED FOR FURTHER CONSIDERATION IN ESTABLISHING LIMITATIONS AND STANDARDS

The toxic pollutants listed below are selected for further consideration in establishing limitations and standards for this subcategory. The toxic pollutants selected for further consideration for limitation are each discussed following the list.

114. antimony
115. arsenic
118. cadmium
119. chromium
120. copper
122. lead
124. nickel
125. selenium
126. silver
127. thallium
128. zinc

Antimony was detected above its treatable concentration (0.47 mg/l) in four of six samples analyzed. The quantifiable concentrations ranged from 1.0 mg/l to 16 mg/l. Since antimony was present in concentrations exceeding the concentrations

achievable by identified treatment technology, it is selected for consideration for limitation.

Arsenic was detected above its treatable concentration (0.34 mg/l) in five of six samples analyzed. The quantifiable concentrations ranged from 0.72 mg/l to 47.4 mg/l. Since arsenic was present in concentrations exceeding the concentrations achievable by identified treatment technology, it is selected for consideration for limitation.

Cadmium was detected above its treatable concentration (0.049 mg/l) in three of six samples analyzed. The quantifiable concentrations ranged from 0.015 mg/l to 2.05 mg/l. Since cadmium was present in concentrations exceeding the concentrations achievable by identified treatment technology, it is selected for consideration for limitation.

Chromium was detected above its treatable concentration (0.07 mg/l) in two of four samples analyzed. The quantifiable concentrations ranged from 0.05 mg/l to 1.06 mg/l. Since chromium was present in concentrations exceeding the concentrations achievable by identified treatment technology, it is selected for consideration for limitation.

Copper was detected above its treatable concentration (0.39 mg/l) in three of six samples analyzed. The quantifiable concentrations ranged form 0.084 mg/l to 3.27 mg/l. Since copper was present in concentrations exceeding the concentrations achievable by identified treatment technology, it is selected for consideration for limitation.

Lead was detected above its treatable concentration (0.08 mg/l) in four of six samples analyzed. The quantifiable concentrations ranged from 0.03 mg/l to 16.5 mg/l. Since lead was present in concentrations exceeding the concentrations achievable by identified treatment technology, it is selected for consideration for limitation.

Nickel was detected above its treatable concentration (0.22 mg/l) in one of three samples analyzed. The quantifiable concentrations ranged from 0.05 mg/l to 1.8 mg/l. Since nickel was present in concentrations exceeding the concentrations achievable by identified treatment technology, it is selected for consideration for limitation.

Selenium was detected above its treatable concentration (0.2 mg/l) in the one sample for which it was analyzed. The quantifiable concentrations is 0.51 mg/l. Since selenium is present in concentrations exceeding the concentrations achievable by identified treatment technology, it is selected for consideration for limitation.

Silver was detected above its treatable concentration (0.07 mg/l) in the one sample for which it was analyzed. The observed quantifiable concentration is 0.12 mg/l. Since silver was

present in concentrations exceeding the concentrations achievable by identified treatment technology, it is selected for consideration for limitation.

Thallium was detected above its treatable concentration (0.34 mg/l) in the one sample for which it was analyzed. The observed quantifiable concentration is 1.0 mg/l. Since thallium was present in concentrations exceeding the concentrations achievable by identified treatment technology, it is selected for consideration for limitation.

Zinc was detected above its treatable concentration (0.23 mg/l) in six of six samples analyzed. The quantifiable concentrations ranged from 0.39 mg/l to 289 mg/l. Since zinc was present in concentrations exceeding the concentrations achievable by identified treatment technology, it is selected for consideration for limitation.

Table VI-1

FREQUENCY OF OCCURRENCE OF PRIORITY POLLUTANTS
PRIMARY AND SECONDARY GERMANIUM AND GALLIUM SUBCATEGORY
RAW WASTEWATER

Pollutant	Analytical Quantification Concentration (mg/l)(a)	Treatable Concentration (mg/l)(b)	Number of Streams Analyzed	Number of Samples Analyzed	ND	Detected Below Quantification Concentration	Detected Below Treatable Concentration	Detected Above Treatable Concentration
1. acenaphthene	0.010	0.01	1	1	1			
2. acrolein	0.010	0.01	1	1	1			
3. acrylonitrile	0.010	0.01	1	1	1			
4. benzene	0.010	0.01	1	1				1
5. benzidine	0.010	0.01	1	1	1			
6. carbon tetrachloride	0.010	0.01	1	1	1			
7. chlorobenzene	0.010	0.01	1	1	1			
8. 1,2,4-trichlorobenzene	0.010	0.01	1	1	1			
9. hexachlorobenzene	0.010	0.01	1	1				1
10. 1,2-dichloroethane	0.010	0.01	1	1	1			
11. 1,1,1-trichloroethane	0.010	0.01	1	1	1			
12. hexachloroethane	0.010	0.01	1	1	1			
13. 1,1-dichloroethane	0.010	0.01	1	1	1			
14. 1,1,2-trichloroethane	0.010	0.01	1	1	1			
15. 1,1,2,2-tetrachloroethane	0.010	0.01	1	1	1			
16. chloroethane	0.010	0.01	1	1	1			
17. bis(chloromethyl) ether	0.010	0.01	1	1	1			
18. bis(2-chloroethyl) ether	0.010	0.01	1	1	1			
19. 2-chloroethyl vinyl ether	0.010	0.01	1	1	1			
20. 2-chloronaphthalene	0.010	0.01	1	1	1			
21. 2,4,6-trichlorophenol	0.010	0.01	1	1		1		
22. parachlorometa cresol	0.010	0.01	1	1	1			
23. chloroform	0.010	0.01	1	1		1		
24. 2-chlorophenol	0.010	0.01	1	1	1			
25. 1,2-dichlorobenzene	0.010	0.01	1	1	1			
26. 1,3-dichlorobenzene	0.010	0.01	1	1	1			
27. 1,4-dichlorobenzene	0.010	0.01	1	1	1			
28. 3,3'-dichlorobenzidine	0.010	0.01	1	1	1			
29. 1,1-dichloroethylene	0.010	0.01	1	1	1			
30. 1,2-trans-dichloroethylene	0.010	0.01	1	1	1			
31. 2,4-dichlorophenol	0.010	0.01	1	1	1			
32. 1,2-dichloropropane	0.010	0.01	1	1	1			
33. 1,3-dichloropropylene	0.010	0.01	1	1	1			
34. 2,4-dimethylphenol	0.010	0.01	1	1	1			

Table VI-1 (Continued)

FREQUENCY OF OCCURRENCE OF PRIORITY POLLUTANTS
PRIMARY AND SECONDARY GERMANIUM AND GALLIUM SUBCATEGORY
RAW WASTEWATER

Pollutant	Analytical Quantification Concentration (mg/l)(a)	Treatable Concentration (mg/l)(b)	Number of Streams Analyzed	Number of Samples Analyzed	ND	Detected Below Quantification Concentration	Detected Below Treatable Concentration	Detected Above Treatable Concentration
35. 2,4-dinitrotoluene	0.010	0.01	1	1	1			
36. 2,6-dinitrotoluene	0.010	0.01	1	1	1			
37. 1,2-diphenylhydrazine	0.010	0.01	1	1	1			
38. ethylbenzene	0.010	0.01	1	1	1			
39. fluoranthene	0.010	0.01	1	1	1			
40. 4-chlorophenyl phenyl ether	0.010	0.01	1	1	1			
41. 4-bromophenyl phenyl ether	0.010	0.01	1	1	1			
42. bis(2-chloroisopropyl) ether	0.010	0.01	1	1	1			
43. bis(2-chloroethoxy) methane	0.010	0.01	1	1	1			
44. methylene chloride	0.010	0.01	1	1				1
45. methyl chloride	0.010	0.01	1	1	1			
46. methyl bromide	0.010	0.01	1	1	1			
47. bromoform	0.010	0.01	1	1	1			
48. dichlorobromomethane	0.010	0.01	1	1	1			
49. trichlorofluoromethane	0.010	0.01	1	1	1			
50. dichlorodifluoromethane	0.010	0.01	1	1	1			
51. chlorodibromomethane	0.010	0.01	1	1	1			
52. hexachlorobutadiene	0.010	0.01	1	1	1			
53. hexachlorocyclopentadiene	0.010	0.01	1	1	1			
54. isophorone	0.010	0.01	1	1	1			
55. naphthalene	0.010	0.01	1	1	1			
56. nitrobenzene	0.010	0.01	1	1	1			
57. 2-nitrophenol	0.010	0.01	1	1	1			
58. 4-nitrophenol	0.010	0.01	1	1	1			
59. 2,4-dinitrophenol	0.010	0.01	1	1	1			
60. 4,6-dinitro-o-cresol	0.010	0.01	1	1	1			
61. N-nitrosodimethylamine	0.010	0.01	1	1	1			
62. N-nitrosodiphenylamine	0.010	0.01	1	1	1			
63. N-nitrosodi-n-propylamine	0.010	0.01	1	1	1			
64. pentachlorophenol	0.010	0.01	1	1		1		
65. phenol	0.010	0.01	1	1	1			
66. bis(2-ethylhexyl) phthalate	0.010	0.01	1	1		1		
67. butyl benzyl phthalate	0.010	0.01	1	1	1			
68. di-n-butyl phthalate	0.010	0.01	1	1		1		

Table VI-1 (Continued)

FREQUENCY OF OCCURRENCE OF PRIORITY POLLUTANTS
PRIMARY AND SECONDARY GERMANIUM AND GALLIUM SUBCATEGORY
RAW WASTEWATER

Pollutant	Analytical Quantification Concentration (mg/l)(a)	Treatable Concentration (mg/l)(b)	Number of Streams Analyzed	Number of Samples Analyzed	ND	Detected Below Quantification Concentration	Detected Below Treatable Concentration	Detected Above Treatable Concentration
69. di-n-octyl phthalate	0.010	0.01	1	1	1			
70. diethyl phthalate	0.010	0.01	1	1	1			
71. dimethyl phthalate	0.010	0.01	1	1	1			
72. benzo(a)anthracene	0.010	0.01	1	1	1			
73. benzo(a)pyrene	0.010	0.01	1	1	1			
74. 3,4-benzofluoranthene	0.010	0.01	1	1	1			
75. benzo(k)fluoranthene	0.010	0.01	1	1	1			
76. chrysene	0.010	0.01	1	1	1			
77. acenaphthylene	0.010	0.01	1	1	1			
78. anthracene (c)	0.010	0.01	1	1	1			
79. benzo(ghi)perylene	0.010	0.01	1	1	1			
80. fluorene	0.010	0.01	1	1	1			
81. phenanthrene (c)	0.010	0.01	1	1	1			
82. dibenzo(a,h)anthracene	0.010	0.01	1	1	1			
83. indeno(1,2,3-cd)pyrene	0.010	0.01	1	1	1			
84. pyrene	0.010	0.01	1	1	1			
85. tetrachloroethylene	0.010	0.01	1	1	1			
86. toluene	0.010	0.01	1	1	1			
87. trichloroethylene	0.010	0.01	1	1		1		
88. vinyl chloride	0.010	0.01	1	1	1			
89. aldrin	0.005	0.01	1	1	1			
90. dieldrin	0.005	0.01	1	1	1			
91. chlordane	0.005	0.01	1	1	1			
92. 4,4'-DDT	0.005	0.01	1	1	1			
93. 4,4'-DDE	0.005	0.01	1	1	1			
94. 4,4'-DDD	0.005	0.01	1	1	1			
95. alpha-endosulfan	0.005	0.01	1	1	1			
96. beta-endosulfan	0.005	0.01	1	1	1			
97. endosulfan sulfate	0.005	0.01	1	1	1			
98. endrin	0.005	0.01	1	1	1			
99. endrin aldehyde	0.005	0.01	1	1	1			
100. heptachlor	0.005	0.01	1	1	1			
101. heptachlor epoxide	0.005	0.01	1	1	1			
102. alpha-BHC	0.005	0.01	1	1	1			
103. beta-BHC	0.005	0.01	1	1	1			

Table VI-1 (Continued)

FREQUENCY OF OCCURRENCE OF PRIORITY POLLUTANTS
PRIMARY AND SECONDARY GERMANIUM AND GALLIUM SUBCATEGORY
RAW WASTEWATER

Pollutant	Analytical Quantification Concentration (mg/l)(a)	Treatable Concentration (mg/l)(b)	Number of Streams Analyzed	Number of Samples Analyzed	ND	Detected Below Quantification Concentration	Detected Below Treatable Concentration	Detected Above Treatable Concentration
104. gamma-BHC	0.005	0.01	1	1	1			
105. delta-BHC	0.005	0.01	1	1	1			
106. PCB-1242 (d)	0.005	0.01	1	1	1			
107. PCB-1254 (d)	0.005	0.01	1	1	1			
108. PCB-1221 (d)	0.005	0.01	1	1	1			
109. PCB-1232 (e)	0.005	0.01	1	1	1			
110. PCB-1248 (e)	0.005	0.01	1	1	1			
111. PCB-1260 (e)	0.005	0.01	1	1	1			
112. PCB-1016 (e)	0.005	0.01	1	1	1			
113. toxaphene	0.005	0.01	1	1	1			
114. antimony	0.100	0.47	5	6		2		4
115. arsenic	0.010	0.34	5	6		1		5
116. asbestos	10 MFL	10 MFL		0				
117. beryllium	0.010	0.20	3	3		2	1	
118. cadmium	0.002	0.049	5	6		1	2	3
119. chromium	0.005	0.07	4	4		1	1	2
120. copper	0.009	0.39	5	6			3	3
121. cyanide (f)	0.02	0.047	1	1				1
122. lead	0.020	0.08	5	6			2	4
123. mercury	0.0001	0.036	1	1		1		
124. nickel	0.005	0.22	3	3			2	1
125. selenium	0.01	0.20	1	1				1
126. silver	0.02	0.07	1	1				1
127. thallium	0.100	0.34	1	1				1
128. zinc	0.050	0.23	5	6				6
129. 2,3,7,8-tetrachlorodibenzo-p-dioxin (TCDD)				0				
total suspended solids (TSS)	5.0	2.6	5	5				5

(a) Analytical quantification concentration was reported with the data (see Section V).

(b) Treatable concentrations are based on performance of chemical precipitation, sedimentation, and filtration.

(c), (d), (e) Reported together.

(f) Analytical quantification concentration for EPA Method 335.2, Total Cyanide Methods for Chemical Analysis of Water and Wastes, EPA 600/4-79-020, March 1979.

TABLE VI-2

TOXIC POLLUTANTS NEVER DETECTED

1. acenaphthene
2. acrolein
3. acrylonitrile
5. benzidene
6. carbon tetrachloride (tetrachloromethane)
7. chlorobenzene
8. 1,2,4-trichlorobenzene
10. 1,2-dichloroethane
11. 1,1,1,-trichloroethane
12. hexachloroethane
13. 1,1-dichloroethane
14. 1,1,2-trichloroethane
15. 1,1,2,2-tetrachloroethane
16. chloroethane
17. bis (choromethyl) ether (deleted)
18. bis (2-chloroethyl) ether
19. 2-chloroethyl vinyl ether (mixed)
20. 2-chloronaphthalene
22. parachlorometa cresol
24. 2-chlorophenol
25. 1,2-dichlorobenzene
26. 1,3-dichlorobenzene
27. 1,4-dichlorobenzene
28. 3,3'-dichlorobenzidine
29. 1,1-dichloroethylene
30. 1,2-trans-dichloroethylene
31. 2,4-dichlorophenol
32. 1,2-dichloropropane
33. 1,2-dichloropropylene (1,3-dichloropropene)
34. 2,4-dimethylphenol
35. 2,4-dinitrotoluene
36. 2,6-dinitrotoluene
37. 1,2-diphenylhydrazine
38. ethylbenzene
39. fluoranthene
40. 4-chlorophenyl phenyl ether
41. 4-bromophenyl phenyl ether
42. bis(2-chloroisopropyl) ether
43. bis(2-chloroethoxy) methane
45. methyl chloride (chloromethane)
46. methyl bromide (bromomethane)
47. bromoform (tribromomethane)
48. dichlorobromethane
49. trichlorofluoromethane (deleted)

TABLE VI-2 (Continued)

TOXIC POLLUTANTS NEVER DETECTED

50. dichlorodifluoromethane (deleted)
51. chlorodibromomethane
52. hexachlorobutadiene
53. hexachlorocyclopentadiene
54. isophorone
55. naphthalene
56. nitrobenzene
57. 2-nitrophenol
58. 4-nitrophenol
59. 2,4-dinitrophenol
60. 4,6-dinitro-o-cresol
61. N-nitrosodimethylamine
62. N-nitrosodiphenylamine
63. N-nitrosodi-n-propylamine
65. phenol
67. butyl benzyl phthalate
69. di-n-octyl phthalate
70. diethyl phthalate
71. dimethyl phthalate
72. benzo (a)anthracene (1,2-benzanthracene)
73. benzo (a)pyrene (3,4-benzopyrene)
74. 3,4-benzofluoranthene
75. benzo(k)fluoranthane (11,12-benzofluoranthene)
76. chrysene
77. acenapthylene
78. anthracene
79. benzo(g,h,i)perylene (1,11-benzoperylene)
80. fluorene
81. phenanthrene
82. dibenzo (a,h)anthracene (1,2,5,6-dibenzanthracene)
83. indeno (1,2,3-cd)pyrene (w,e,-o-phenylenepyrene)
84. pyrene
85. tetrachloroethylene
86. toluene
88. vinyl chloride (chloroethylene)
89. aldrin
90. dieldrin
91. chlordane (technical mixture and metabolites)
92. 4,4'-DDT
93. 4,4'-DDD (p,p'DDX)
94. 4,4'-DDD (p,p'TDE)
95. alpha-endosulfan
96. beta-endosulfan
97. endosulfan sulfate
98. endrin
99. endrin aldehyde

TABLE VI-2(Continued)

TOXIC POLLUTANTS NEVER DETECTED

100. heptachlor
101. heptachlor epoxide
102. alpha-BHC
103. beta-BHC104. gamma-BHC (lindane)
105. delta-BHC
106. PCB-1242 (Arochlor 1242)
107. PCB-1254 (arochlor 1254)
108. PCB-1221 (Arochlor 1221)
109. PCB-1232 (Arochlor 1232)
110. PCB-1248 (Arochlor 1248)
111. PCB-1260 (Arochlor 1260)
112. PCB-1016 (Arochlor 1016)
113. toxaphene
116. asbestos (fibrous)
129. 2,3,7,8-tetrachlorodibenzo-p-dioxin (TCDD)

THIS PAGE INTENTIONALLY LEFT BLANK

SECTION VII

CONTROL AND TREATMENT TECHNOLOGIES

The preceding sections of this supplement discussed the sources, flows, and characteristics of the wastewaters from primary and secondary germanium and gallium plants. This section summarizes the description of these wastewaters and indicates the treatment technologies which are currently practiced in the primary and secondary germanium and gallium subcategory for each waste stream. Secondly, this section presents the control and treatment technology options which were examined by the Agency for possible application to the primary and secondary germanium and gallium subcategory.

CURRENT CONTROL AND TREATMENT PRACTICES

This section presents a summary of the control and treatment technologies that are currently being applied to each of the sources generating wastewater in this subcategory. As discussed in Section V, wastewater associated with the primary and secondary germanium and gallium subcategory is characterized by the presence of the priority metal pollutants and suspended solids. This analysis is supported by the raw (untreated) wastewater data presented for specific sources as well as combined waste streams in Section V. Generally, these pollutants are present in each of the waste streams at concentrations above treatability and these waste streams are commonly combined for treatment. Construction of one wastewater treatment system for combined treatment allows plants to take advantage of economic scale and in some instances to combine streams of different alkalinity to reduce treatment chemical requirements. Two plants in this subcategory currently have combined wastewater treatment systems, none have lime precipitation and sedimentation, but two have limestone pH adjustment. As such, two options have been selected for consideration for BPT, BAT, NSPS, and pretreatment based on combined treatment of these compatible waste streams.

STILL LIQUOR

Germanium tetrachloride is generated by chlorinating germanium concentrates or scrap with hydrochloric acid or chlorine gas. Still liquor consists of impurities present in the raw materials as well as excess hydrochloric acid solution which remains when the chlorination reaction is complete. One of the two plants which produces germanium tetrachloride disposes of the resultant still liquor by means of contractor disposal; the other plant adjusts the pH with lime and then holds the neutralized waste in a RCRA permitted surface impoundment.

CHLORINATOR WET AIR POLLUTION CONTROL

Plants which chlorinate germanium with hydrochloric acid and chlorine use wet scrubbers to control air emissions. No plants practice recycle of the chlorinator scrubber liquor. The scrubber liquor was found to be disposed by contractor disposal, or by disposal into a RCRA permitted surface impoundment after adjusting the pH with lime.

GERMANIUM HYDROLYSIS FILTRATE

Germanium tetrachloride is hydrolyzed with water to produce germanium dioxide solids and the solids separated from the excess solution by filtration. As with the still liquor and chlorinator scrubber liquor, the wastewater may be contractor disposed or the pH adjusted with lime and the waste held in an RCRA permitted surface impoundment.

ACID WASH AND RINSE WATER

Plants wash germanium bars with a hydrofluoric acid-nitric acid mixture and then rinse them with water. No recycle is practiced for this wastewater. In addition to disposal by a contractor or into a RCRA impoundment, this wastewater is also treated and discharged.

GALLIUM HYDROLYSIS FILTRATE

Gallium is recovered by hydrolyzing gallium trichloride producing a solid gallium hydroxide. Spent or excess solution is separated from the gallium product by filtration, and the filtrate wastewater stream treated and discharged or treated in an evaporation pond.

SOLVENT EXTRACTION RAFFINATE

One plant recovers gallium from scrap by using a solvent extraction process. Scrap is dissolved in acid and then extracted into an organic phase. The spent acid, or raffinate, is disposed of by a contractor without any treatment.

CONTROL AND TREATMENT OPTIONS

The Agency examined two control and treatment technology options that are applicable to the primary and secondary germanium and gallium subcategory. The options selected for evaluation represent a combination of end-of-pipe treatment technologies.

OPTION A

Option A for the primary and secondary germanium and gallium subcategory requires control and treatment technologies to reduce the discharge of wastewater pollutant mass.

The Option A treatment scheme consists of chemical precipitation and sedimentation technology. Specifically, lime or some other alkaline compound is used to precipitate toxic metal ions as metal hydroxides. The metal hydroxides and suspended solids settle out and the sludge is collected. Vacuum filtration is used to dewater sludge.

OPTION C

Option C for the primary and secondary germanium and gallium subcategory consists of all control and treatment requirements of Option A, (chemical precipitation and sedimentation) plus multimedia filtration technology added at the end of the Option A treatment scheme. Multimedia filtration is used to remove suspended solids, including precipitates of metals, beyond the concentration attainable by gravity sedimentation. The filter suggested is of the gravity, mixed-media type, although other forms of filters, such as rapid sand filters or pressure filters would perform satisfactorily. The addition of filters also provides consistent removal during periods of time in which there are rapid increases in flows or loadings of pollutants to the treatment system.

THIS PAGE INTENTIONALLY LEFT BLANK

SECTION VIII

COSTS, ENERGY, AND NONWATER QUALITY ASPECTS

This section presents a summary of compliance costs for the primary and secondary germanium and gallium subcategory and a description of the treatment options and subcategory-specific assumptions used to develop these estimates. Together with the estimated pollutant removal performance presented in Sections IX, X, XI, and XII of this supplement, these cost estimates provide a basis for evaluating each regulatory option. These cost estimates are also used in determining the probable economic impact of regulation on the subcategory at different pollutant discharge levels. In addition, this section addresses nonwater quality environmental impacts of wastewater treatment and control alternatives, including air pollution, solid wastes, and energy requirements, which are specific to the primary and secondary germanium and gallium subcategory.

TREATMENT OPTIONS FOR EXISTING SOURCES

As discussed in Section VII, two treatment options have been developed for existing primary and secondary germanium and gallium sources. The treatment schemes for each option are summarized below and schematically presented in Figures X-1 and X-2 (pages 5329 and 5330).

OPTION A

Option A consists of chemical precipitation and sedimentation technology.

OPTION C

Option C for the primary and secondary germanium and gallium subcategory consists of all control and treatment requirements of Option A, (chemical precipitation and sedimentation) plus multimedia filtration technology added at the end of the Option A treatment scheme.

COST METHODOLOGY

A detailed discussion of the methodology used to develop the compliance costs is presented in Section VIII of Vol. I. Promulgation cost estimates did not change from those developed for the proposed regulation. These cost estimates are presented in Table VIII-1 (page 5305). Each subcategory contains a unique set of waste streams requiring certain subcategory-specific assumptions to develop compliance costs. The major assumptions relevant to the cost estimates for the primary and secondary germanium and gallium subcategory are discussed briefly below.

(1) Raw waste data for the acid wash and rinse waste stream were transferred from a similar stream, wastewater from titanium etching with hydrofluoric acid in the primary and secondary titanium subcategory.

(2) The germanium concentration in the acid wash and rinse waste stream is estimated to be 4000 mg/l based on germanium solubility data and estimates from plant personnel. One-day and ten-day treatment effectiveness concentrations for germanium are assumed to be 0.44 and 0.18 mg/l, for lime and settle and 0.37 and 0.15 mg/l for lime, settle, and filter.

A second set of costs were generated in the primary and secondary germanium and gallium subcategory.
In general, the Agency does not prepare compliance costs for zero dischargers. In this subcategory, however, wastes generated tend to be hazardous and fall under RCRA regulations. In the event that the plants presently achieving zero discharge would lose their capability to impound their wastewaters due to a change in the RCRA regulations, EPA wanted to study the cost impact these plants would face in having to provide treatment for their wastewater prior to discharge. These costs were used for assessing the potential economic achievability of these plants to change their discharge status.

NONWATER QUALITY ASPECTS

Nonwater quality impacts specific to the primary and secondary germanium and gallium subcategory, including energy requirements, solid waste and air pollution are discussed below.

ENERGY REQUIREMENTS

The methodology used for determining the energy requirements for the various options is discussed in Section VIII of the General Development Document. Energy requirements for the two options considered are estimated at 6,253 kwh/yr and 7,496 kwh/yr for Options A and C, respectively. Option C, which includes filtration, is estimated to increase energy consumption over Option A by approximately 20 percent. Option C represents roughly three percent of a typical plant's electrical energy usage. It is therefore concluded that the energy requirements of the treatment options considered will not have a significant impact on total plant energy consumption.

SOLID WASTE

Sludge generated in the primary and secondary germanium and gallium subcategory is due to the precipitation of metal hydroxides and carbonates using lime. Sludges associated with the primary and secondary germanium and gallium subcategory will necessarily contain quantities of priority metal pollutants. Sludges from primary operations are not subject to

regulation as hazardous wastes since wastes generated by primary smelters and refiners are currently exempt from regulation by Act of Congress (Resource Conservation and Recovery Act (RCRA), Section 3001(b)), as interpreted by EPA. Wastes from secondary metal operations can be regulated as hazardous. However, the Agency examined the solid wastes that would be generated at secondary nonferrous metals manufacturing plants by the suggested treatment technologies and believes they are not hazardous wastes under the Agency's regulations implementing Section 3001 of RCRA. This judgment is based on the results of Extraction Procedure (EP) toxicity tests performed on similar sludges (i.e., priority-metal-bearing lime sludges) generated by other industries such as the iron and steel industry. A small amount of excess lime was added during treatment, and the sludges subsequently generated passed the toxicity test. See CFR §261.24. Thus, the Agency believes that the wastewater sludges from both primary and secondary operations will not be EP toxic if the recommended technology is applied.

Although it is the Agency's view that solid wastes generated as a result of these guidelines are not expected to be hazardous, generators of these wastes must test the waste to determine if the wastes meet any of the characteristics of hazardous waste (see 40 CFR §262.11).

If these wastes identified should be or are listed as hazardous, they will come within the scope of RCRA's "cradle to grave" hazardous waste management program, requiring regulation from the point of generation to point of final disposition. EPA's generator standards would require generators of hazardous nonferrous metals manufacturing wastes to meet containerization, labeling, recordkeeping, and reporting requirements; if plants dispose of hazardous wastes off-site, they would have to prepare a manifest which would track the movement of the wastes from the generator's premises to a permitted off-site treatment, storage, or disposal facility. See 40 CFR §262.20 [45 FR 33142 (May 19, 1980), as amended at 45 FR 86973 (December 31, 1980)]. The transporter regulations require transporters of hazardous waste to comply with the manifest system to assure that the wastes are delivered to a permitted facility. See 40 CFR §263.20 (45 FR 33151 (May 19, 1980), amended at 45 FR 86973 (December 31, 1980)]. Finally, RCRA regulations establish standards for hazardous waste treatment, storage, and disposal facilities allowed to receive such wastes. See 40 CFR Part 464 [46 FR 2802 (January 12, 1981), 47 FR 32274 (July 26, 1982)].

Even if these wastes are not identified as hazardous, they still must be disposed of in compliance with the Subtitle D open dumping standards, implementing §4004 of RCRA. See 44 FR 53438 (September 13, 1979). The Agency has calculated as part of the costs for wastewater treatment the cost of hauling and disposing of these wastes.

The Agency estimates that the promulgated PSES regulation for

primary and secondary germanium and gallium manufacturing facilities will generate 108 metric tons of solid wastes (wet basis) in 1982 as a result of wastewater treatment. The promulgated BPT and BAT regulations will not generate any solid wastes because there are currently no direct dischargers.

AIR POLLUTION

There is no reason to believe that any substantial air pollution problems will result from implementation of chemical precipitation and sedimentation. These technologies transfer pollutants to solid waste and are not likely to transfer pollutants to air.

TABLE VIII-1

The cost of compliance data are not presented here because the data on which they are based have been claimed to be confidential.

THIS PAGE INTENTIONALLY LEFT BLANK

SECTION IX

BEST PRACTICABLE CONTROL TECHNOLOGY CURRENTLY AVAILABLE

This section defines the effluent characteristics attainable through the application of best practicable control technology currently available (BPT), Section 301(b)(a)(A). BPT reflects the existing performance by plants of various sizes, ages, and manufacturing processes within the primary and secondary germanium and gallium subcategory, as well as the established performance of the model BPT systems. Particular consideration is given to the treatment already in place at plants within the data base.

The factors considered in identifying BPT include the total cost of applying the technology in relation to the effluent reduction benefits from such application, the age of equipment and facilities involved, the manufacturing processes used, nonwater quality environmental impacts (including energy requirements), and other factors the Administrator considers appropriate. In general, the BPT level represents the average of the existing performances of plants of various ages, sizes, processes, or other common characteristics. Where existing performance is uniformly inadequate, BPT may be transferred from a different subcategory or category. Limitations based on transfer of technology are supported by a rationale concluding that the technology is, indeed, transferable, and a reasonable prediction that it will be capable of achieving the prescribed effluent limits BPT focuses on end-of-pipe treatment rather than process changes or internal controls, except where such practices are common industry practice.

TECHNICAL APPROACH TO BPT

The Agency studied the primary and secondary germanium and gallium subcategory to identify the processes used, the wastewaters generated, and the treatment processes installed. Information was collected from the category using data collection portfolios, and specific plants were sampled and the wastewaters analyzed. In making technical assessments of data, reviewing manufacturing processes, and assessing wastewater treatment technology options, both indirect and direct dischargers have been considered as a single group. An examination of plants and processes did not indicate any process differences based on the type of discharge, whether it be direct or indirect.

As explained in Section IV, the primary and secondary germanium and gallium subcategory has been subdivided into six potential wastewater sources. Since the water use, discharge rates, and pollutant characteristics of each of these wastewaters is

potentially unique, effluent limitations will be developed for each of the six subdivisions.

For each of the subdivisions, a specific approach was followed for the development of BPT mass limitations. The first requirement to calculate these limitations is to account for production and flow variability from plant to plant. Therefore, a unit of production or production normalizing parameter (PNP) was determined for each waste stream which could then be related to the flow from the process to determine a production normalized flow. Selection of the PNP for each process element is discussed in Section IV. Each plant within the subcategory was then analyzed to determine which subdivisions were present, the specific flow rates generated for each subdivision, and the specific production normalized flows for each subdivision. This analysis is discussed in detail in Section V. Nonprocess wastewaters such as rainfall runoff and noncontact cooling water are not considered in the analysis.

Production normalized flows for each subdivision were then analyzed to determine the flow to be used as part of the basis for BPT mass limitations. The selected flow (sometimes referred to as the BPT regulatory flow or BPT discharge rate) reflects the water use controls which are common practices within the category. The BPT regulatory flow is based on the average of all applicable data. Plants with normalized flows above the average may have to implement some method of flow reduction to achieve the BPT limitations.

The second requirement to calculate mass limitations is the set of concentrations that are achievable by application of the BPT level of treatment technology. Section VII discusses the various control and treatment technologies which are currently in place for each wastewater source. In most cases in the nonferrous metals manufacturing category, the current control and treatment technologies consist of chemical precipitation and sedimentation (lime and settle technology).

In the germanium and gallium subcategory current control and treatment technology is inadequate, and lime and settle technology must be transferred to this subcategory. Lime and settle technology is widely demonstrated on wastewaters with similar characteristics to that found in this subcategory, and it is realistic to believe that a similar performance is achievable.

Using these regulatory flows and the achievable concentrations, the next step is to calculate mass loadings for each wastewater source or subdivision. This calculation was made on a stream-by-stream basis, primarily because plants in this subcategory may perform one or more of the operations in various combinations. The mass loadings (milligrams of pollutant per kilogram of production mg/kg) are based on multiplying the BPT regulatory flow (l/kkg) by the concentration achievable by the BPT level of treatment technology (mg/l) for each pollutant parameter to be limited under BPT. These mass loadings are

published in the Federal Register and in CFR Part 421 as the effluent limitations.

The mass loadings which are allowed under BPT for each plant will be the sum of the individual mass loadings for the various wastewater sources which are found at particular plants. Accordingly, all the wastewater generated within a plant may be combined for treatment in a single or common treatment system but the effluent limitations for these combined wastewaters are based on the various wastewater sources which actually contribute to the combined flow. This method accounts for the variety of combinations of wastewater sources and production processes which may be found at primary and secondary germanium and gallium plants.

The Agency usually establishes wastewater limitations in terms of mass rather than concentration. This approach prevents the use of dilution as a treatment method (except for controlling pH). The production normalized wastewater flow (l/kkg) is a link between the production operations and the effluent limitations. The pollutant discharge attributable to each operation can be calculated from the normalized flow and effluent concentration achievable by the treatment technology and summed to derive an appropriate limitation for each plant.

INDUSTRY COST AND POLLUTANT REMOVAL ESTIMATES

In balancing costs in relation to pollutant removal estimates, EPA considers the volume and nature of existing discharges, the volume and nature of discharges expected after application of BPT, the general environmental effects of the pollutants, and the cost and economic impacts of the required pollution control level. The Act does not require or permit consideration of water quality problems attributable to particular point sources or industries, or water quality improvements in particular water quality bodies. Accordingly, water quality considerations were not the basis for selecting the proposed or promulgated BPT.

The methodology for calculating pollutant removal estimates and plant compliance costs is discussed in Section X. Because the data on which the cost and pollutant removal estimates are based have been claimed confidential, these values are not included here. Pollutant removal estimates and compliance costs for promulgation are the same as those developed for the proposed regulation.

BPT OPTION SELECTION

EPA proposed a two tier approach for regulating this subcategory. Level A provisions were applicable to facilities which only reduce germanium dioxide in a hydrogen furnace and wash and rinse the germanium product in conjunction with zone refining. Level B provisions were applicable to all other facilities in the subcategory. At proposal the BPT technology basis for both Levels A and B was chemical precipitation and sedimentation.

We are promulgating BPT requirements for the primary and secondary germanium and gallium subcategory equivalent to those proposed for BPT but we no longer have two regulatory levels. The technology basis for the BPT limitations are chemical precipitation and sedimentation technology to remove metals, fluoride, and solids from combined wastewaters and to control pH (Option A). The pollutants specifically promulgated for regulation at BPT are arsenic, lead, zinc, fluoride, TSS, and pH.

Although there are no existing direct dischargers in this subcategory, BPT is promulgated for any existing zero discharger that elects to discharge at some point in the future. This action was taken because wastewaters from germanium and gallium operations which contain significant loadings of toxic pollutants are currently being disposed of in a RCRA permitted surface impoundment.

More stringent technology options were not selected for BPT since they require in-process changes or end-of-pipe technologies less widely practiced in the subcategory, and, therefore, are more appropriately considered under BAT. EPA is not promulgating a two tier regulatory scheme for this subcategory, because there is not much additional removal of pollutants using the additional treatment technology of Option C. The BPT treatment scheme is presented in Figure IX-1 (page 5318).

WASTEWATER DISCHARGE RATES

A BPT discharge rate is calculated for each subdivision based on the average of the flows of the existing plants, as determined from analysis of dcp. The discharge rate is used with the achievable treatment concentrations to determine BPT effluent limitations. Since the discharge rate may be different from each wastewater source, separate production normalized discharge rates for each of the six wastewater sources are discussed below and summarized in Table IX-1. The discharge rates are normalized on a production basis by relating the amount of wastewater generated to the mass of the intermediate or product which is produced by the process associated with the waste stream in question. These production normalizing parameters, or PNPs, are also listed in Table IX-1.

Section V of this document further describes the discharge flow rates and presents the water use and discharge flow rates for each plant by subdivision in Tables V-1 through V-6.

STILL LIQUOR

The BPT wastewater discharge rate used for both proposal and promulgation for still liquor is 63,000 l/kkg (15,097 gal/ton) of germanium chlorinated. This rate is allocated only for those plants which chlorinate germanium concentrate or scrap with hydrochloric acid or chlorine to produce germanium

tetrachloride. Water use and wastewater discharge rates are presented in Table V-1. The BPT flow is based on the rate reported by one plant with this process.

CHLORINATOR WET AIR POLLUTION CONTROL

The BPT wastewater discharge rate used for both proposal and promulgation for chlorinator wet air pollution control is 13,170 l/kkg (3,156 gal/ton) of germanium chlorinated, based on zero percent recycle. This rate is allocated only for those plants which chlorinate germanium raw material to produce germanium tetrachloride, and use a wet scrubber to control air emissions from the chlorinator. Water use and wastewater discharge rates are presented in Table V-2. The BPT flow is based on the rate reported by one plant with this process.

GERMANIUM HYDROLYSIS FILTRATE

The BPT wastewater discharge rate used for both proposal and promulgation for germanium hydrolysis filtrate is 18,870 l/kkg (4,522 gal/ton) of germanium hydrolyzed. This rate is allocated only for those plants which hydrolyze germanium tetrachloride to germanium dioxide by reacting it with water. Water use and wastewater discharge rates are presented in Table V-3. The BPT flow is based on the rate reported by one plant with this process.

ACID WASH AND RINSE WATER

The BPT wastewater discharge rate used for both proposal and promulgation for acid wash and rinse water is 155,720 l/kkg (37,316 gal/ton) of germanium washed. This rate is allocated only for those plants which wash germanium bars with acid and then rinse them with water. Water use and wastewater discharge rates are presented in Table V-4. The BPT flow is based on the rate reported by one plant with this process. Other plants reported insufficient information to calculate this discharge rate.

GALLIUM HYDROLYSIS FILTRATE

The BPT wastewater discharge rate used for both proposal and promulgation for gallium hydrolysis filtrate is 33,710 l/kkg (8,078 gal/ton) of gallium hydrolyzed. This rate is allocated only for those plants which hydrolyze gallium trichloride to gallium oxide hydroxide by reacting it with water and sodium hydroxide. Water use and wastewater discharge rates are presented in Table V-5. The BPT flow is based on the average of the rates reported by plants with this wastewater stream.

SOLVENT EXTRACTION RAFFINATE

The BPT wastewater discharge rate used for both proposal and promulgation for solvent extraction raffinate is 18,820 l/kkg (4,510 gal/ton) of gallium produced by solvent extraction. This

THIS PAGE INTENTIONALLY LEFT BLANK

SECTION X

BEST AVAILABLE TECHNOLOGY ECONOMICALLY ACHIEVABLE

These effluent limitations are based on the best control and treatment technology used by a specific point source within the industrial category or subcategory, or by another industry where it is readily transferable. Emphasis is placed on additional treatment techniques applied at the end of the treatment systems currently used, as well as reduction of the amount of water used and discharged, process control, and treatment technology optimization.

The factors considered in assessing best available technology economically achievable (BAT) include the age of equipment and facilities involved, the process used, process changes, nonwater quality environmental impacts (including energy requirements), and the costs of application of such technology. At a minimum, BAT represents the best available technology economically achievable at plants of various ages, sizes, processes, or other characteristics. Where the Agency has found the existing performance to be uniformly inadequate, BAT may be transferred from a different subcategory or category. BAT may include feasible process changes or internal controls, even when not in common industry practice.

The statutory assessment of BAT considers costs, but does not require a balancing of costs against pollutant removals. However, in assessing the proposed and promulgated BAT, the Agency has given substantial weight to the economic achievability of the technology.

TECHNICAL APPROACH TO BAT

The Agency reviewed a wide range of technology options and evaluated the available possibilities to ensure that the most effective and beneficial technologies were used as the basis of BAT. To accomplish this, the Agency elected to examine two technology options which could be applied to the secondary molybdenum and vanadium subcategory as alternatives for the basis of BAT effluent limitations.

For the development of BAT effluent limitations, mass loadings were calculated for each wastewater source or subdivision in the subcategory using the same technical approach as described in Section IX for BPT limitations development. The differences in the mass loadings for BPT and BAT are due to increased treatment effectiveness achievable with the more sophisticated BAT treatment technology.

The treatment technologies considered for BAT are summarized below:

Option A (Figure X-1, page 5329) is based on

- o Chemical precipitation and sedimentation

Option C (Figure X-2, page 5330) is based on:

- o Chemical precipitation and sedimentation
- o Multimedia filtration

The two options examined for BAT are discussed in greater detail on the following pages. The first option considered (Option A) is the same as the BPT treatment and control technology which was presented in the previous section. The second option represents substantial progress toward the reduction of pollutant discharges above and beyond the progress achievable by BPT.

OPTION A

Option A for the primary and secondary germanium and gallium subcategory is equivalent to the control and treatment technologies which were analyzed for BPT in Section IX (see Figure IX). The BPT end-of-pipe treatment scheme includes chemical precipitation and sedimentation. The discharge rates for Option A are equal to the discharge rates allocated to each stream as a BPT discharge flow.

OPTION C

Option C for the primary and secondary germanium and gallium subcategory consists of all control and treatment requirements of Option A, (chemical precipitation and sedimentation) plus multimedia filtration technology added at the end of Option A treatment scheme (see Figure X-2, page 5326). Multimedia filtration is used to remove suspended solids, including precipitates of toxic metals, beyond the concentrations attainable by gravity sedimentation. The filter suggested is of the gravity, mixed media type, although other forms of filters, such as rapid sand filters or pressure filters, would perform satisfactorily.

INDUSTRY COST AND POLLUTANT REMOVAL ESTIMATES

As one means of evaluating each technology option, EPA developed estimates of the pollutant removals and the compliance costs associated with each option. The methodologies are described below.

POLLUTANT REMOVAL ESTIMATES

A complete description of the methodology used to calculate the estimated pollutant removal, or benefit, achieved by the application of the various treatment options is presented in Section X of Vol.1. In short, sampling data collected during the field sampling program were used to characterize the major waste

streams considered for regulation. At each sampled facility, the sampling data was production normalized for each unit operation (i.e., mass of pollutant generated per mass of product manufactured). This value, referred to as the raw waste, was used to estimate the mass of toxic pollutants generated within the primary and secondary germanium and gallium subcategory. The pollutant removal estimates were calculated for each plant by first estimating the total mass of each pollutant in the untreated wastewater. This was calculated by first multiplying the raw waste values by the corresponding production value for that stream and the summing these values for each pollutant for every stream generated by the plant.

Next, the volume of wastewater discharged after the application of each treatment option was estimated for each operation at each plant by comparing the actual discharge to the regulatory flow. The smaller of the two values was selected and summed with the other plant flows. The mass of pollutant discharged was then estimated by multiplying the achievable concentration values attainable with the option(mg/l) by the estimated volume of process wastewater discharged by the subcategory. The mass of pollutant removed is the difference between the estimated mass of pollutant generated within the subcategory and the mass of pollutant discharged after application of the treatment option. The pollutant removal estimates for indirect dischargers in the primary and secondary germanium and gallium subcategory are presented in Table XII-1 (Page 5341).

COMPLIANCE COSTS

In estimating subcategory-wide compliance costs, the first step was to develop a cost estimation model, relating the total costs associated with installation and operation of wastewater treatment technologies to plant process wastewater discharge. EPA applied the model to each plant. A plant's investment and operating costs are determined by what treatment it has in place and by its individual process wastewater discharge. As discussed above, this flow is either the actual or the BAT regulatory flow, whichever is less. The final step was to annualize the capital costs, and to sum the annualized capital costs, and the operating and maintenance costs for each plant, yielding the cost of compliance for the subcategory. Compliance costs for indirect dischargers are shown in Section XII. These costs were used in assessing economic achievability.

WASTEWATER DISCHARGE RATES

A BAT discharge rate was calculated for each subdivision based upon the flows of the existing plants, as determined from analysis of the data collection portfolios. The discharge rate is used with the achievable treatment concentrations to determine BAT effluent limitations. Since the discharge rate may be different for each wastewater source, separate production normalized discharge rates for each of the six wastewater sources were determined and are summarized in Table X-1 (Page 5225). The

BAT wastewater discharge rates are identical to those determined for BPT. No additional flow reduction measures are considered feasible for this subcategory.

BAT OPTION SELECTION - PROPOSAL

EPA proposed Level a BAT limitations for this subcategory based on chemical precipitation and sedimentation (Option A) for plants that only reduce germanium dioxide in a hydrogen furnace and then wash and rinse the germanium product in conjunction with zone refining. Level B BAT limitations were proposed for all other facilities in this subcategory. The level B effluent limitations at proposal were based on Option A with the addition of filtration (Option C).

The pollutants specifically limited under the proposed BAT were arsenic, lead, zinc, germanium and fluoride. Gallium was also considered for regulation as discussed in the March 18, 1985 Notice of Data Availability and Request for Comment (50 FR 10918). The Agency considered applying the same technology levels to this entire subcategory but decided to propose this two tiered regulatory scheme because there was little additional pollutant removal from the Level A wastewater streams when treated by the added Level B technology.

Although there are no existing direct dischargers in this subcategory, BAT was proposed for any existing zero discharger who elects to discharge at some time in the future. This action was taken because wastewaters from germanium and gallium operations which contain significant loadings of toxic pollutants are currently being disposed of in a RCRA permitted surface impoundment.

BAT OPTION SELECTION - PROMULGATION

We are promulgating BAT limitations for this subcategory based on chemical precipitation and sedimentation (Option A) for all facilities in this subcategory. This is equivalent to BPT technology. We are not promulgating two tiered limitations for this subcategory because there is not much additional removal of pollutants using the more expensive regulatory scheme.

The pollutants specifically limited under BAT are arsenic, lead, zinc, and fluoride. The priority pollutants antimony, cadmium, chromium, copper, nickel, selenium, silver and thallium were also considered for regulation because they were found at treatable concentrations in the raw wastewaters from this subcategory. These pollutants were not selected for specific regulation because they will be effectively controlled when the regulated toxic metals are treated to the concentrations achievable by the model BAT technology.

Although there are no existing direct dischargers in this subcategory, BAT is promulgated for any existing zero discharger who elects to discharge at some time in the future. This action

was taken because wastewaters from germanium and gallium operations which contain significant loadings of toxic pollutants are currently being disposed of in a RCRA permitted surface impoundment.

REGULATED POLLUTANT PARAMETERS

The raw wastewater concentrations from individual operations and the subcategory as a whole were examined to select certain pollutants and pollutant parameters for limitation. This examination and evaluation was presented in Section VI. The Agency, however, has chosen not to regulate all 11 toxic pollutants selected in this analysis. The high cost associated with analysis for priority metal pollutants has prompted EPA to develop an alternative method for regulating and monitoring priority pollutant discharges from the nonferrous metals manufacturing category. Rather than developing specific effluent mass limitations and standards for each of the priority metals found in treatable concentrations in the raw wastewater from a given subcategory, the Agency is promulgating effluent mass limitations only for those pollutants generated in the greatest quantities as shown by the pollutant removal estimate analysis. The pollutants selected for specific limitation are listed below:

115. arsenic
122. lead
128. zinc
     fluoride

By establishing limitations and standards for certain priority metal pollutants, dischargers will attain the same degree of control over priority metal pollutants as they would have been required to achieve had all the priority metal pollutants been directly limited.

This approach is technically justified since the treatable concentrations used for chemical precipitation and sedimentation technology are based on optimized treatment for concomitant multiple metals removal. Thus, even though metals have somewhat different theoretical solubilities, they will be removed at very nearly the same rate in a chemical precipitation and sedimentation treatment system operated for multiple metals removal.

The toxic metal pollutants selected for specific limitation in the primary and secondary germanium and gallium subcategory to control the discharges of priority metal pollutants are arsenic, lead and zinc. The following toxic metal pollutants are excluded from limitation on the basis that they are effectively controlled by the limitations developed for arsenic, lead and zinc:

114. antimony
118. cadmium
119. chromium (total)
120. copper

124. nickel
125. selenium
126. silver
127. thallium

EFFLUENT LIMITATIONS

The concentrations achievable by application of BAT are discussed in Section VII of this supplement. The treatable concentrations for both one day maximum and monthly average values are multiplied by the BAT normalized discharge flows summarized in Table X-1 (page 5325) to calculate the mass of pollutants allowed to be discharged per mass of product. The results of these calculations in milligrams of pollutant per kilogram of product represent the BAT effluent limitations and are presented in Table X-2 (Page 5326) for each wastewater stream.

Table X-1

BAT WASTEWATER DISCHARGE RATES FOR THE
PRIMARY AND SECONDARY GERMANIUM AND GALLIUM SUBCATEGORY

Wastewater Stream	BAT Normalized Discharge Rate		Production Normalizing Parameters
	l/kkg	gal/ton	
Still liquor	63,000	15,097	Germanium chlorinated
Chlorinator wet air pollution control	13,170	3,156	Germanium chlorinated
Germanium hydrolysis filtrate	18,870	4,522	Germanium hydrolyzed
Acid wash and rinse water	155,720	37,316	Germanium washed
Gallium hydrolysis filtrate	33,710	8,078	Gallium hydrolyzed
Solvent extraction raffinate	18,820	4,510	Gallium produced by solvent extraction

TABLE X-2
BAT FOR THE
PRIMARY AND SECONDARY GERMANIUM AND GALLIUM SUBCATEGORY

(a) Still Liquor BAT

Pollutant or pollutant property	Maximum for any one day	Maximum for monthly average
	mg/kg (lb/million lbs) of germanium chlorinated	
Antimony	180.800	80.640
*Arsenic	131.700	58.590
Cadmium	21.420	9.450
Chromium	27.720	11.340
Copper	119.700	63.000
*Lead	26.460	12.600
Nickel	121.000	80.010
Selenium	77.490	34.650
Silver	25.830	10.710
Thallium	129.200	57.330
*Zinc	91.980	38.430
*Fluoride	2,205.000	1,254.000
Gallium	27.720	11.340
Germanium	27.720	11.340

(b) Chlorinator Wet Air Pollution Control BAT

Pollutant or pollutant property	Maximum for any one day	Maximum for monthly average
	mg/kg (lb/million lbs) of germanium chlorinated	
Antimony	37.800	16.860
*Arsenic	27.530	12.250
Cadmium	4.478	1.976
Chromium	5.795	2.371
Copper	25.020	13.170
*Lead	5.531	2.634
Nickel	25.290	16.730
Selenium	16.200	7.244
Silver	5.400	2.239
Thallium	27.000	11.980
*Zinc	19.230	8.034
*Fluoride	461.000	262.100
Gallium	5.795	2.371
Germanium	5.795	2.371

*Regulated Pollutant

TABLE X-2 (Continued)
BAT FOR THE
PRIMARY AND SECONDARY GERMANIUM AND GALLIUM SUBCATEGORY

(c) Germanium Hydrolysis Filtrate BAT

Pollutant or pollutant property	Maximum for any one day	Maximum for monthly average
	mg/kg (lb/million lbs) of germanium hydrolyzed	
Antimony	54.160	24.150
*Arsenic	39.440	17.550
Cadmium	6.416	2.831
Chromium	8.303	3.397
Copper	35.850	18.870
*Lead	7.925	3.774
Nickel	36.230	23.960
Selenium	23.210	10.380
Silver	7.737	3.208
Thallium	38.680	17.170
*Zinc	27.550	11.510
*Fluoride	660.500	375.500
Gallium	8.303	3.397
Germanium	8.303	3.397

(d) Acid Wash and Rinse Water BAT

Pollutant or pollutant property	Maximum for any one day	Maximum for monthly average
	mg/kg (lb/million lbs) of germanium washed	
Antimony	446.900	199.300
*Arsenic	325.500	144.800
Cadmium	52.940	23.360
Chromium	68.520	28.030
Copper	295.900	155.700
*Lead	65.400	31.140
Nickel	299.000	197.800
Selenium	191.500	85.650
Silver	63.850	26.470
Thallium	319.200	141.700
*Zinc	227.400	94.990
*Fluoride	5,450.000	3,099.000
Gallium	68.520	28.030
Germanium	68.520	28.030

*Regulated Pollutant

TABLE X-2 (Continued)
BAT FOR THE
PRIMARY AND SECONDARY GERMANIUM AND GALLIUM SUBCATEGORY

(e) Gallium Hydrolysis Filtrate BAT

Pollutant or pollutant property	Maximum for any one day	Maximum for monthly average
mg/kg (lb/million lbs) of gallium hydrolyzed		
Antimony	96.750	43.150
*Arsenic	70.450	31.350
Cadmium	11.460	5.057
Chromium	14.830	6.068
Copper	64.050	33.710
*Lead	14.160	6.742
Nickel	64.720	42.810
Selenium	41.460	18.540
Silver	13.820	5.731
Thallium	69.110	30.680
*Zinc	49.220	20.560
*Fluoride	1,180.000	670.800
Gallium	14.830	6.068
Germanium	14.830	6.068

(f) Solvent Extraction Raffinate BAT

Pollutant or pollutant property	Maximum for any one day	Maximum for monthly average
mg/kg (lb/million lbs) of gallium produced by solvent extraction		
Antimony	54.010	24.090
*Arsenic	39.330	17.500
Cadmium	6.399	2.823
Chromium	8.281	3.388
Copper	35.760	18.820
*Lead	7.904	3.764
Nickel	36.130	23.900
Selenium	23.150	10.350
Silver	7.716	3.199
Thallium	38.580	17.130
*Zinc	27.480	11.480
*Fluoride	658.700	374.500
Gallium	8.281	3.388
Germanium	8.281	3.388

*Regulated Pollutant

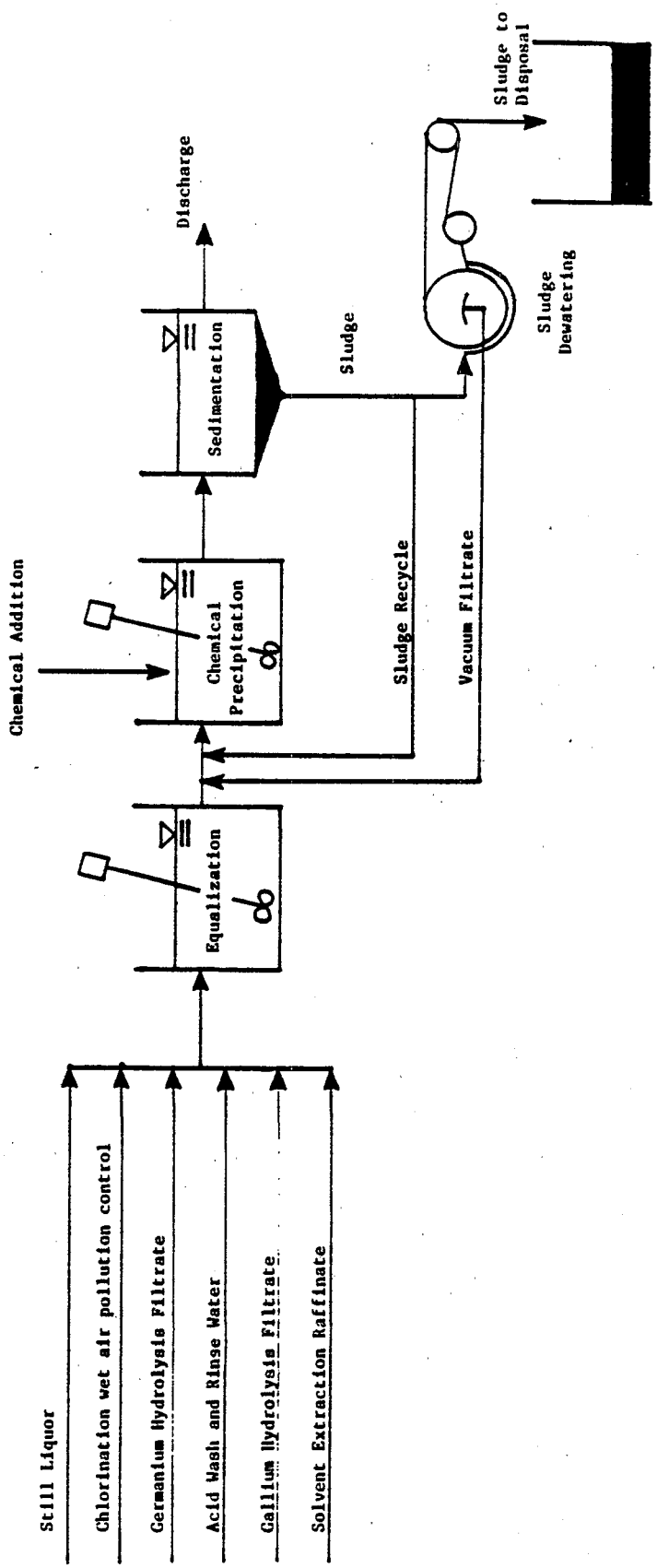

Figure X-1

BAT TREATMENT SCHEME FOR OPTION A

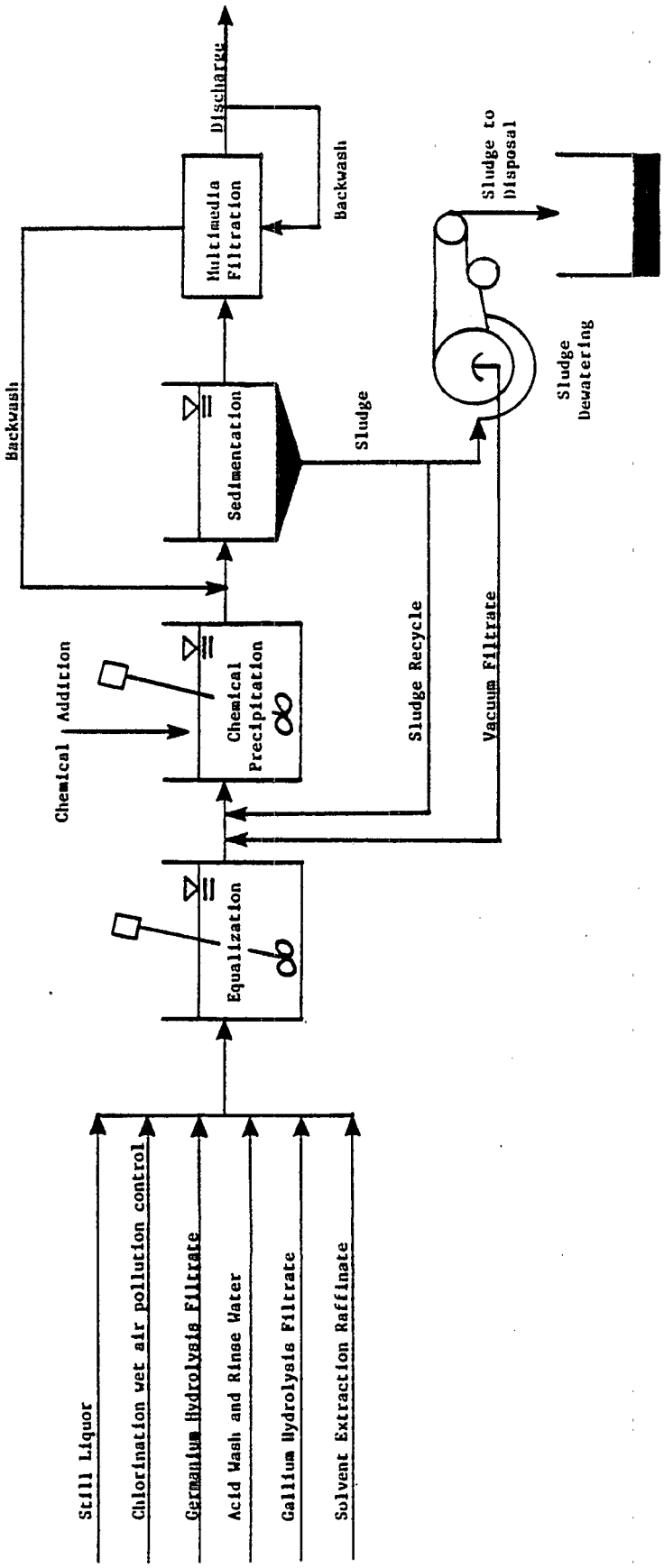

Figure X-2

BAT TREATMENT SCHEME FOR OPTION C

SECTION XI

NEW SOURCE PERFORMANCE STANDARDS

This section describes the technologies for treatment of wastewater from new sources and presents mass discharge standards for regulated pollutants for NSPS in the primary and secondary germanium and gallium subcategory, based on selected treatment technology. New plants have the opportunity to design the best and most efficient production processes and wastewater treatment technologies without facing the added costs and restrictions encountered in retrofitting and existing plant. Therefore, EPA has considered the best demonstrated process changes, in-plant controls and end-of-pipe treatment technologies which reduce pollution to the maximum extent feasible as the basis for NSPS.

TECHNICAL APPROACH TO NSPS

New source performance standards are equivalent to the best available technology (BAT) selected for primary and secondary germanium and gallium plants. This result is a consequence of careful review by the Agency of wide range of technical options for new source treatment systems which is discussed in Section XI of the General Development Document. Additionally, there was nothing found to indicate that the wastewater flows and characteristics of new plants would not be similar to those from existing plants, since the processes used by new sources are not expected to differ from those used at existing sources. Consequently, BAT production normalized discharge rates, which are based on the best existing practices of the subcategory, can also be applied to new sources. These rates are presented in Table XI-1 (Page 5333).

Treatment technologies considered for the NSPS options are identical to the treatment technologies considered for the BAT options. These options are:

OPTION A

- o Chemical precipitation and sedimentation

OPTION C

- o Chemical precipitation and sedimentation
- o Multimedia filtration

NSPS OPTION SELECTION - PROPOSAL

EPA proposed that the best available demonstrated technology for the primary and secondary germanium and gallium subcategory be equivalent to Option A (chemical precipitation and sedimentation)

for Level A plants, and Option C (chemical precipitation, sedimentation, and multimedia filtration) for Level B plants. The technology basis for the proposed NSPS is equivalent to that for the proposed BAT.

The wastewater flow rates for NSPS were the same as the proposed BAT flow rates. Flow reduction measures for NSPS were not considered feasible because no new demonstrated technologies existed within the subcategory that improved on water use and discharge practices.

NSPS OPTION SELECTION - PROMULGATION

EPA is promulgating NSPS for the primary and secondary germanium and gallium based on Option A (chemical precipitation and sedimentation). This technology basis for the promulgated NSPS is equivalent to that for the promulgated BAT.

We do not believe that new plants could achieve any flow reduction beyond the allowances promulgated for BAT. Therefore, wastewater flow rates for NSPS are equivalent to those for the promulgated BAT. Because NSPS is equal to BAT we believe that the promulgated NSPS will not have a detrimental impact on the entry of new plants into this subcategory.

REGULATED POLLUTANT PARAMETERS

The Agency has no reason to believe that the pollutants that will be found in treatable concentrations in processes within new sources will be any different than with existing sources. Accordingly, pollutants and pollutant parameters selected for limitation under NSPS, in accordance with the rationale of Sections VI and X, are identical to those selected for BAT. The conventional pollutant parameters TSS and pH are also selected for limitation.

NEW SOURCE PERFORMANCE STANDARDS

The NSPS discharge flows for each wastewater source are the same as the discharge rates for BAT and are shown in Table XI-1 (page 5333). The mass of pollutant allowed to be discharged per mass of product is calculated by multiplying the appropriate achievable concentration (mg/l) by the production normalized wastewater discharge flows (l/kkg). The results of these calculations are the mass-based production-related new source performance standards. These standards are presented in Table XI-2 (Page 5334).

Table XI-1

NSPS WASTEWATER DISCHARGE RATES FOR THE
PRIMARY AND SECONDARY GERMANIUM AND GALLIUM SUBCATEGORY

Wastewater Stream	NSPS Normalized Discharge Rate		Production Normalizing Parameters
	l/kkg	gal/ton	
Still liquor	63,000	15,097	Germanium chlorinated
Chlorinator wet air pollution control	13,170	3,156	Germanium chlorinated
Germanium hydrolysis filtrate	18,870	4,522	Germanium hydrolyzed
Acid wash and rinse water	155,720	37,316	Germanium washed
Gallium hydrolysis filtrate	33,710	8,078	Gallium hydrolyzed
Solvent extraction raffinate	18,820	4,510	Gallium produced by solvent extraction

TABLE XI-2
NSPS FOR THE
PRIMARY AND SECONDARY GERMANIUM AND GALLIUM SUBCATEGORY

(a) Still Liquor NSPS

Pollutant or pollutant property	Maximum for any one day	Maximum for monthly average
	mg/kg (lb/million lbs) of germanium chlorinated	
Antimony	180.800	80.640
*Arsenic	131.700	58.590
Cadmium	21.420	9.450
Chromium	27.720	11.340
Copper	119.700	63.000
*Lead	26.460	12.600
Nickel	121.000	80.010
Selenium	77.490	34.650
Silver	25.830	10.710
Thallium	129.200	57.330
*Zinc	91.980	38.430
*Fluoride	2,205.000	1,254.000
Gallium	27.720	11.340
Germanium	27.720	11.340
*TSS	2,583.000	1,229.000
*pH Within the range of 7.5 to 10.0 at all times		

(b) Chlorinator Wet Air Pollution Control NSPS

Pollutant or pollutant property	Maximum for any one day	Maximum for monthly average
	mg/kg (lb/million lbs) of germanium chlorinated	
Antimony	37.800	16.860
*Arsenic	27.530	12.250
Cadmium	4.478	1.976
Chromium	5.795	2.371
Copper	25.020	13.170
*Lead	5.531	2.634
Nickel	25.290	16.730
Selenium	16.200	7.244
Silver	5.400	2.239
Thallium	27.000	11.980
*Zinc	19.230	8.034
*Fluoride	461.000	262.100
Gallium	5.795	2.371
Germanium	5.795	2.371
*TSS	540.000	256.800
*pH Within the range of 7.5 to 10.0 at all times		

*Regulated Pollutant

TABLE XI-2
NSPS FOR THE
PRIMARY AND SECONDARY GERMANIUM AND GALLIUM SUBCATEGORY

(c) Germanium Hydrolysis Filtrate NSPS

Pollutant or pollutant property	Maximum for any one day	Maximum for monthly average
	mg/kg (lb/million lbs) of germanium hydrolyzed	
Antimony	54.160	24.150
*Arsenic	39.440	17.550
Cadmium	6.416	2.831
Chromium	8.303	3.397
Copper	35.850	18.870
*Lead	7.925	3.774
Nickel	36.230	23.960
Selenium	23.210	10.380
Silver	7.737	3.208
Thallium	38.680	17.170
*Zinc	27.550	11.510
*Fluoride	660.500	375.500
Gallium	8.303	3.397
Germanium	8.303	3.397
*TSS	773.700	368.000
*pH	Within the range of 7.5 to 10.0 at all times	

(d) Acid Wash and Rinse Water NSPS

Pollutant or pollutant property	Maximum for any one day	Maximum for monthly average
	mg/kg (lb/million lbs) of germanium washed	
Antimony	446.900	199.300
*Arsenic	325.500	144.800
Cadmium	52.940	23.360
Chromium	68.520	28.030
Copper	295.900	155.700
*Lead	65.400	31.140
Nickel	299.000	197.800
Selenium	191.500	85.650
Silver	63.850	26.470
Thallium	319.200	141.700
*Zinc	227.400	94.990
*Fluoride	5,450.000	3,099.000
Gallium	68.520	28.030
Germanium	68.520	28.030
*TSS	6,385.000	3,037.000
*pH	Within the range of 7.5 to 10.0 at all times	

*Regulated Pollutant

TABLE XI-2
NSPS FOR THE
PRIMARY AND SECONDARY GERMANIUM AND GALLIUM SUBCATEGORY

(e) Gallium Hydrolysis Filtrate NSPS

Pollutant or pollutant property	Maximum for any one day	Maximum for monthly average
mg/kg (lb/million lbs) of gallium hydrolyzed		
Antimony	96.750	43.150
*Arsenic	70.450	31.350
Cadmium	11.460	5.057
Chromium	14.830	6.068
Copper	64.050	33.710
*Lead	14.160	6.742
Nickel	64.720	42.810
Selenium	41.460	18.540
Silver	13.820	5.731
Thallium	69.110	30.680
*Zinc	49.220	20.560
*Fluoride	1,180.000	670.800
Gallium	14.830	6.068
Germanium	14.830	6.068
*TSS	1,382.000	657.300
*pH Within the range of 7.5 to 10.0 at all times		

(f) Solvent Extraction Raffinate NSPS

Pollutant or pollutant property	Maximum for any one day	Maximum for monthly average
mg/kg (lb/million lbs) gallium produced by solvent extraction		
Antimony	54.010	24.090
*Arsenic	39.330	17.500
Cadmium	6.399	2.823
Chromium	8.281	3.388
Copper	35.760	18.820
*Lead	7,904	3,764
Nickel	36.130	23.900
Selenium	23.150	10.350
Silver	7.716	3.199
Thallium	38.580	17.130
*Zinc	27.480	11.480
*Fluoride	658.700	374.500
Gallium	8.281	3.388
Germanium	8.281	3.388
*TSS	771.600	367.000
*pH Within the range of 7.5 to 10.0 at all times		

* Regulated Pollutant

SECTION XII

PRETREATMENT STANDARDS

This section describes the control and treatment technologies for pretreatment of process wastewaters from new sources in the primary and secondary germanium and gallium subcategory. PSES are designed to prevent the discharge of pollutants which pass through, interfere with or are otherwise incompatible with the operation of publicly owned treatment works (POTW). The Clean Water Act also requires pretreatment for pollutants, such as toxic metals, that limit POTW sludge management alternatives. New indirect discharge facilities, like new direct discharge facilities, have the opportunity to incorporate the best available demonstrated technologies, including process changes, in-plant controls, and end-of-pipe treatment technologies, and to use plant site selection to ensure adequate treatment system function. Pretreatment standards are to be technology based, and analogous to the best available or best demonstrated technology for removal of toxic pollutants. Pretreatment standards for regulated pollutants are presented based on the selected control and treatment technology.

TECHNICAL APPROACH TO PRETREATMENT

Before proposing and promulgating pretreatment standards, the Agency examines whether the pollutants discharged by the industry pass through the POTW or interfere with the POTW operation or its chosen sludge disposal practices. In determining whether pollutants pass through a well-operated POTW achieving secondary treatment, the Agency compares the percentage of a pollutant removed by POTW with the percentage removed by direct dischargers applying the best available technology economically achievable. A pollutant is deemed to pass through the POTW when the average percentage removed nationwide by well-operated POTW meeting secondary treatment requirements, is less than the percentage removed by direct dischargers complying with BAT effluent limitations guidelines for that pollutant.

This definition of pass through satisfies two competing objectives set by Congress that standards for indirect dischargers be equivalent to standards for direct dischargers while at the same time, the treatment capability and performance of the POTW be recognized and taken into account in regulating the discharge of pollutants from indirect dischargers.

The Agency compares percentage removal rather than the mass or concentration of pollutants discharged because the latter would not take into account the mass of pollutants discharged to the

POTW from non-industrial sources or the dilution of the pollutants in the POTW effluent to lower concentrations due to the addition of large amounts of non-industrial wastewater.

INDUSTRY COST AND POLLUTANT REMOVAL ESTIMATES

The industry cost and pollutant removal estimates of each treatment option were used to determine the most cost-effective option. The methodology applied in calculating pollutant removal estimates and plant compliance costs is discussed in Section X. Table XII-1 (Page 5341) shows the estimated pollutant removals for indirect dischargers. Compliance costs for indirect dischargers are presented in Table XII-2 (Page 5342).

PRETREATMENT STANDARDS FOR EXISTING AND NEW SOURCES

Options for pretreatment of wastewaters from both existing and new sources are based on increasing the effectiveness of end-of-pipe treatment technologies. All in-plant changes and applicable end-of-pipe treatment processes have been discussed previously in Sections X and XI. The options for PSNS and PSES, therefore, are the same as the BAT options discussed in Section X.

A description of each option is presented in Section X, while a more detailed discussion, including pollutants controlled by each treatment process is presented in Section VII of the General Development Document.

Treatment technologies considered for the PSNS and PSES options are:

OPTION A

- o Chemical precipitation and sedimentation

OPTION C

- o Chemical precipitation and sedimentation
- o Multimedia filtration

PSES OPTION SELECTION - PROPOSAL

EPA proposed PSES based on Option A (chemical precipitation and sedimentation) for Level A plants, and Option C (chemical precipitation), sedimentation, and multimedia filtration) for Level B plants.

EPA proposed PSES to prevent pass-through of arsenic, lead, zinc, fluoride, and germanium. These pollutants were specifically limited in the proposed PSES. Wastewater discharge rates for the proposed PSES were equivalent to those proposed for BAT.

PSES OPTION SELECTION - PROMULGATION

We are pomulgating PSES for this subcategory based on chemical precipitation and sedimentation technology (Option A). The pollutants controlled at PSES are the same as those controlled at BAT. We are promulgating PSES to prevent pass-through of arsenic, lead, zinc and fluoride. These POTW achieving secondary treatment to an average of 33 percent, while BAT technology removes approximately 70 percent.

Implementation of the promulgated PSES would remove annually an estimated 20 kg of toxic metals and 376 kg of fluoride. The capital and annual costs for the promulgated PSES are $28,300 and $22,200 (1982 dollars), respectively.

PSNS OPTION SELECTION - PROPOSAL

EPA proposed that the pretreatment standards technology base for new sources in the primary and secondary germanium and gallium subcategory be equivalent to Option A (chemical precipitation and sedimentation) for Level A plants, and Option C (chemical precipitation, sedimentation, and multimedia filtration) for Level B plants. The proposed PSNS technology basis was equivalent to that of the proposed BAT.

PSNS OPTION SELECTION - PROMULGATION

We are promulgating PSNS equivalent to PSES, NSPS and BAT. The technology basis for the promulgated PSNS is identical to NSPS PSES, and BAT. The same pollutants pass through as at PSES, for the same reasons.

We believe that the promulgated PSNS are achievable, and that they are not a barrier to entry of new plants into this subcategory because they do not include any additional costs compared to PSES.

The wastewater discharge rates for PSNS are identical to the BAT discharge rates for each waste stream. The PSES and PSNS discharge rates are shown in Table XII-3 (Page 5343).

REGULATED POLLUTANT PARAMETERS

Pollutants selected for limitation, in accordance with the rationale of Sections VI and X, are identical to those selected for limitation for BAT. It is necessary to promulgate PSES and PSNS to prevent the pass-through of arsenic, lead, zinc, and fluoride, which are the limited pollutants.

PRETREATMENT STANDARDS

Pretreatment standards are based on the treatable concentrations from the selected treatment technology, and the discharge rates determined in Section X for BAT. A mass of pollutant per mass of product (mg/kg) allocation is given for each subdivision within

the subcategory. This pollutant allocation is based on the product of the achievable concentration from the model treatment (mg/l) and the production normalized wastewater discharge rate (l/kkg). The achievable treatment concentrations for BAT are identical to those for PSES and PSNS. PSES and PSNS are presented in Tables XII-4 and XII-5 (Pages 5344 and 5347).

Table XII-1

POLLUTANT REMOVAL ESTIMATES FOR INDIRECT DISCHARGERS
PRIMARY AND SECONDARY GERMANIUM AND GALLIUM SUBCATEGORY

Pollutant	Raw Waste (kg/yr)	Option A Discharge (kg/yr)	Option A Removed (kg/yr)	Option C Discharge (kg/yr)	Option C Removed (kg/yr)
Antimony	0.08	0.05	0.03	0.05	0.03
Arsenic	0.08	0.05	0.03	0.05	0.03
Cadmium	0.06	0.01	0.04	0.01	0.05
Chromium (total)	0	0	0	0	0
Copper	12.26	0.11	12.16	0.07	12.19
Cyanide (total)	0	0	0	0	0
Lead	4.29	0.02	4.27	0.02	4.28
Mercury	0	0	0	0	0
Nickel	0.35	0.14	0.21	0.04	0.31
Selenium	0	0	0	0	0
Silver	0	0	0	0	0
Thallium	0.49	0.09	0.40	0.06	0.43
Zinc	2.86	0.06	2.80	0.04	2.82
TOTAL PRIORITY POLLUTANTS	20.49	0.55	19.93	0.36	20.13
Ammonia	0	0	0	0	0
Cobalt	0	0	0	0	0
Fluoride	378.16	2.74	375.43	1.82	376.34
Germanium	817.65	0.19	817.46	0.13	817.52
TOTAL NONCONVENTIONALS	1,195.81	2.92	1,192.89	1.95	1,193.86
TOTAL CONVENTIONALS	0	0	0	0	0
TOTAL POLLUTANTS	1,216.30	3.47	1,212.82	2.31	1,213.99

Option A - Chemical precipitation and sedimentation.
Option C - Chemical precipitation, sedimentation and filtration.

Table XII-2

COST OF COMPLIANCE FOR THE
PRIMARY AND SECONDARY GERMANIUM AND GALLIUM SUBCATEGORY

Indirect Dischargers

Option	Total Required Capital Cost (1982 Dollars)	Total Annual Cost (1982 Dollars)
A	24,600	20,300
C	28,300	22,200

Table XII-3

PSES AND PSNS WASTEWATER DISCHARGE RATES FOR THE PRIMARY AND SECONDARY GERMANIUM AND GALLIUM SUBCATEGORY

Wastewater Stream	PSES and PSNS Normalized Discharge Rate l/kkg	gal/ton	Production Normalizing Parameters
Still liquor	63,000	15,130	kkg of Ge chlorinated
Chlorinator wet air pollution control	13,170	13,160	kkg of Ge chlorinated
Germanium hydrolysis filtrate	18,870	4,530	kkg of Ge hydrolyzed
Acid wash and rinse water	155,700	37,400	kkg of Ge washed
Gallium hydrolysis filtrate	33,170	8,097	kkg of Ga hydrolyzed
Solvent extraction raffinate	18,820	4,520	kkg of Ga produced by solvent extraction

TABLE XII-4
PSES FOR THE PRIMARY AND SECONDARY GERMANIUM AND GALLIUM SUBCATEGORY

(a) Still Liquor PSES

Pollutant or pollutant property	Maximum for any one day	Maximum for monthly average
	mg/kg (lb/million lbs) of germanium chlorinated	
Antimony	180.800	80.640
*Arsenic	131.700	58.590
Cadmium	21.420	9.450
Chromium	27.720	11.340
Copper	119.700	63.000
*Lead	26.460	12.600
Nickel	121.000	80.010
Selenium	77.490	34.650
Silver	25.830	10.710
Thallium	129.200	57.330
*Zinc	91.980	38.430
*Fluoride	2,205.000	1,254.000
Gallium	27.720	11.340
Germanium	27.720	11.340

(b) Chlorinator Wet Air Pollution Control PSES

Pollutant or pollutant property	Maximum for any one day	Maximum for monthly average
	mg/kg (lb/million lbs) of germanium chlorinated	
Antimony	37.800	16.860
*Arsenic	27.530	12.250
Cadmium	4.478	1.976
Chromium	5.795	2.371
Copper	25.020	13.170
*Lead	5.531	2.634
Nickel	25.290	16.730
Selenium	16.200	7.244
Silver	5.400	2.239
Thallium	27.000	11.980
*Zinc	19.230	8.034
*Fluoride	461.000	262.100
Gallium	5.795	2.371
Germanium	5.795	2.371

*Regulated Pollutant

TABLE XII-4 (Continued)
PSES FOR THE
PRIMARY AND SECONDARY GERMANIUM AND GALLIUM SUBCATEGORY

(c) Germanium Hydrolysis Filtrate PSES

Pollutant or pollutant property	Maximum for any one day	Maximum for monthly average
	mg/kg (lb/million lbs) of germanium hydrolyzed	
Antimony	54.160	24.150
*Arsenic	39.440	17.550
Cadmium	6.416	2.831
Chromium	8.303	3.397
Copper	35.850	18.870
*Lead	7.925	3.774
Nickel	36.230	23.960
Selenium	23.210	10.380
Silver	7.737	3.208
Thallium	38.680	17.170
*Zinc	27.550	11.510
*Fluoride	660.500	375.500
Gallium	8.303	3.397
Germanium	8.303	3.397

(d) Acid Wash and Rinse Water PSES

Pollutant or pollutant property	Maximum for any one day	Maximum for monthly average
	mg/kg (lb/million lbs) of germanium washed	
Antimony	446.900	199.300
*Arsenic	325.500	144.800
Cadmium	52.940	23.360
Chromium	68.520	28.030
Copper	295.900	155.700
*Lead	65.400	31.140
Nickel	299.000	197.800
Selenium	191.500	85.650
Silver	63.850	26.470
Thallium	319.200	141.700
*Zinc	227.400	94.990
*Fluoride	5,450.000	3,099.000
Gallium	68.520	28.030
Germanium	68.520	28.030

*Regulated Pollutant

TABLE XII-4 (Continued)
PSES FOR THE
PRIMARY AND SECONDARY GERMANIUM AND GALLIUM SUBCATEGORY

(e) Gallium Hydrolysis Filtrate PSES

Pollutant or pollutant property	Maximum for any one day	Maximum for monthly average
	mg/kg (lb/million lbs) of gallium hydrolyzed	
Antimony	96.750	43.150
*Arsenic	70.450	31.350
Cadmium	11.460	5.057
Chromium	14.830	6.068
Copper	64.050	33.710
*Lead	14.160	6.742
Nickel	64.720	42.810
Selenium	41.460	18.540
Silver	13.820	5.731
Thallium	69.110	30.680
*Zinc	49.220	20.560
*Fluoride	1,180.000	670.800
Gallium	14.830	6.068
Germanium	14.830	6.068

(f) Solvent Extraction Raffinate PSES

Pollutant or pollutant property	Maximum for any one day	Maximum for monthly average
	mg/kg (lb/million lbs) of gallium produced by solvent extraction	
Antimony	54.010	24.090
*Arsenic	39.330	17.500
Cadmium	6.399	2.823
Chromium	8.281	3.388
Copper	35.760	18.820
*Lead	7.904	3.764
Nickel	36.130	23.900
Selenium	23.150	10.350
Silver	7.716	3.199
Thallium	38.580	17.130
*Zinc	27.480	11.480
*Fluoride	658.700	374.500
Gallium	8.281	3.388
Germanium	8.281	3.388

*Regulated Pollutant

TABLE XII-5
PSNS FOR THE
PRIMARY AND SECONDARY GERMANIUM AND GALLIUM SUBCATEGORY

(a) Still Liquor PSNS

Pollutant or pollutant property	Maximum for any one day	Maximum for monthly average
	mg/kg (lb/million lbs) of germanium chlorinated	
Antimony	180.800	80.640
*Arsenic	131.700	58.590
Cadmium	21.420	9.450
Chromium	27.720	11.340
Copper	119.700	63.000
*Lead	26.460	12.600
Nickel	121.000	80.010
Selenium	77.490	34.650
Silver	25.830	10.710
Thallium	129.200	57.330
*Zinc	91.980	38.430
*Fluoride	2,205.000	1,254.000
Gallium	27.720	11.340
Germanium	27.720	11.340

(b) Chlorinator Wet Air Pollution Control PSNS

Pollutant or pollutant property	Maximum for any one day	Maximum for monthly average
	mg/kg (lb/million lbs) of germanium chlorinated	
Antimony	37.800	16.860
*Arsenic	27.530	12.250
Cadmium	4.478	1.976
Chromium	5.795	2.371
Copper	25.020	13.170
*Lead	5.531	2.634
Nickel	25.290	16.730
Selenium	16.200	7.244
Silver	5.400	2.239
Thallium	27.000	11.980
*Zinc	19.230	8.034
*Fluoride	461.000	262.100
Gallium	5.795	2.371
Germanium	5.795	2.371

*Regulated Pollutant

TABLE XII-5 (Continued)
PSNS FOR THE
PRIMARY AND SECONDARY GERMANIUM AND GALLIUM SUBCATEGORY

(c) Germanium Hydrolysis Filtrate PSNS

Pollutant or pollutant property	Maximum for any one day	Maximum for monthly average
	mg/kg (lb/million lbs) of germanium hydrolyzed	
Antimony	54.160	24.150
*Arsenic	39.440	17.550
Cadmium	6.416	2.831
Chromium	8.303	3.397
Copper	35.850	18.870
*Lead	7.925	3.774
Nickel	36.230	23.960
Selenium	23.210	10.380
Silver	7.737	3.208
Thallium	38.680	17.170
*Zinc	27.550	11.510
*Fluoride	660.500	375.500
Gallium	8.303	3.397
Germanium	8.303	3.397

(d) Acid Wash and Rinse Water PSNS

Pollutant or pollutant property	Maximum for any one day	Maximum for monthly average
	mg/kg (lb/million lbs) of germanium washed	
Antimony	446.900	199.300
*Arsenic	325.500	144.800
Cadmium	52.940	23.360
Chromium	68.520	28.030
Copper	295.900	155.700
*Lead	65.400	31.140
Nickel	299.000	197.800
Selenium	191.500	85.650
Silver	63.850	26.470
Thallium	319.200	141.700
*Zinc	227.400	94.990
*Fluoride	5,450.000	3,099.000
Gallium	68.520	28.030
Germanium	68.520	28.030

*Regulated Pollutant

TABLE XII-5 (Continued)
PSNS FOR THE
PRIMARY AND SECONDARY GERMANIUM AND GALLIUM SUBCATEGORY

(e) Gallium Hydrolysis Filtrate PSNS

Pollutant or pollutant property	Maximum for any one day	Maximum for monthly average
	mg/kg (lb/million lbs) of gallium hydrolyzed	
Antimony	96.750	43.150
*Arsenic	70.450	31.350
Cadmium	11.460	5.057
Chromium	14.830	6.068
Copper	64.050	33.710
*Lead	14.160	6.742
Nickel	64.720	42.810
Selenium	41.460	18.540
Silver	13.820	5.731
Thallium	69.110	30.680
*Zinc	49.220	20.560
*Fluoride	1,180.000	670.800
Gallium	14.830	6.068
Germanium	14.830	6.068

(f) Solvent Extraction Raffinate PSNS

Pollutant or pollutant property	Maximum for any one day	Maximum for monthly average
	mg/kg (lb/million lbs) of gallium produced by solvent extraction	
Antimony	54.010	24.090
*Arsenic	39.330	17.500
Cadmium	6.399	2.823
Chromium	8.281	3.388
Copper	35.760	18.820
*Lead	7.904	3.764
Nickel	36.130	23.900
Selenium	23.150	10.350
Silver	7.716	3.199
Thallium	38.580	17.130
*Zinc	27.480	11.480
*Fluoride	658.700	374.500
Gallium	8.281	3.388
Germanium	8.281	3.388

*Regulated Pollutant

THIS PAGE INTENTIONALLY LEFT BLANK

SECTION XIII

BEST CONVENTIONAL POLLUTANT CONTROL TECHNOLOGY

EPA is not promulgating best conventional pollutant control technology (BCT) for the primary and secondary germanium and gallium subcategory at this time.

THIS PAGE INTENTIONALLY LEFT BLANK

NONFERROUS METALS MANUFACTURING POINT SOURCE CATEGORY

DEVELOPMENT DOCUMENT SUPPLEMENT

for the

Primary Rare Earth Metals Subcategory

William K. Reilly
Administrator

Rebecca Hanmer
Acting Assistant Administrator for Water

Martha Prothro, Director
Office of Water Regulations and Standards

Thomas P. O'Farrell, Director
Industrial Technology Division

Ernst P. Hall, P.E., Chief
Metals Industry Branch
and
Technical Project Officer

May 1989

U.S. Environmental Protection Agency
Office of Water
Office of Water Regulations and Standards
Industrial Technology Division
Washington, D. C. 20460

5353

PRIMARY RARE EARTH METALS SUBCATEGORY

TABLE OF CONTENTS

Section		Page
I	SUMMARY	5363
II	CONCLUSIONS	5365
III	SUBCATEGORY PROFILE	5375
	Description of Primary Rare Earth Metals Production	5375
	Raw Materials	5376
	Calcium Reduction	5376
	Mischmetal Reduction	5376
	Production of Mischmetal	5376
	Process Wastewater Sources	5377
	Other Wastewater Sources	5377
	Age, Production, and Process Profile	5378
IV	SUBCATEGORIZATION	5387
	Factors Considered in Subdividing the Primary Rare Earth Metals Subcategory	5387
	Other Factors	5388
	Production Normalizing Parameters	5388
V	WATER USE AND WASTEWATER CHARACTERISTICS	5389
	Wastewater Flow Rates	5390
	Wastewater Characteristics Data	5390
	Data Collection Portfolios	5391
	Field Sampling Data	5391
	Wastewater Characteristics and Flows by Subdivision	5392
	Dryer Vent Water Quench and Scrubber	5392
	Dryer Vent Caustic Wet Air Pollution Control	5393
	Electrolytic Cell Water Quench and Scrubber	5393
	Electrolytic Cell Caustic Wet Air Pollution Control	5393
	Sodium Hypochlorite Filter Backwash	5394

TABLE OF CONTENTS (Continued)

Section		Page
VI	SELECTION OF POLLUTANT PARAMETERS	5449
	Conventional and Nonconventional Pollutant Parameters Selected	5449
	Toxic Priority Pollutants	5450
	Toxic Pollutants Never Detected	5450
	Toxic Pollutants Never Found Above Their Analytical Quantification Concentration	5450
	Toxic Pollutants Present Below Concentrations Achievable by Treatment	5450
	Toxic Pollutants Detected in a Small Number of Sources	5451
	Toxic Pollutants Selected for Further Consideration in Establishing Limitations and Standards	5452
VII	CONTROL AND TREATMENT TECHNOLOGIES	5463
	Current Control and Treatment Practices	5463
	Dryer Vent Water Quench and Scrubber	5463
	Dryer Vent Caustic Wet Air Pollution Control	5464
	Electrolytic Cell Water Quench and Scrubber	5464
	Electrolytic Cell Caustic Wet Air Pollution Control	5464
	Sodium Hypochlorite Filter Backwash	5464
	Treatment Practices	5464
	Control and Treatment Options	5464
	Option A	5465
	Option B	5465
	Option C	5465
	Option E	5465
VIII	COSTS, ENERGY, AND NONWATER QUALITY ASPECTS	5467
	Treatment Options for Existing Sources	5467
	Option A	5467
	Option B	5467
	Option C	5467
	Option E	5467
	Cost Methodology	5468
	Nonwater Quality Aspects	5468
	Energy Requirements	5468
	Solid Waste	5468
	Air Pollution	5470

TABLE OF CONTENTS (Continued)

Section		Page
IX	BEST PRACTICABLE CONTROL TECHNOLOGY CURRENTLY AVAILABLE	5473
	Technical Approach to BPT	5473
	Industry Cost and Pollutant Removal Estimates	5475
	BPT Option Selection	5475
	Wastewater Discharge Rates	5476
	Dryer Vent Water Quench and Scrubber	5476
	Dryer Vent Caustic Wet Air Pollution Control	5477
	Electrolytic Cell Water Quench and Scrubber	5477
	Electrolytic Cell Caustic Wet Air Pollution Control	5477
	Sodium Hypochlorite Filter Backwash	5478
	Regulated Pollutant Parameters	5478
	Effluent Limitations	5478
X	BEST AVAILABLE TECHNOLOGY ECONOMICALLY ACHIEVABLE	5486
	Technical Approach to BAT	5485
	Option A	5486
	Option B	5486
	Option C	5486
	Option E	5487
	Pollutant Removal Estimates	5487
	Compliance Costs	5488
	BAT Option Selection - Proposal	5489
	BAT Option Selection - Promulgation	5489
	Wastewater Discharge Rates	5490
	Dryer Vent Water Quench and Scrubber	5490
	Electrolytic Cell Water Quench and Scrubber	5491
	Regulated Pollutant Parameters	5491
	Effluent Limitations	5492
XI	NEW SOURCE PERFORMANCE STANDARDS	5503
	Technical Approach to NSPS	5503
	NSPS Option Selection - Proposal	5504
	NSPS Option Selection - Promulgation	5504
	Regulated Pollutant Parameters	5505
	New Source Performance Standards	5505

TABLE OF CONTENTS (Continued)

Section		Page
XII	PRETREATMENT STANDARDS	5511
	Technical Approach to Pretreatment	5511
	Industry Cost and Pollutant Removal Estimates	5512
	Pretreatment Standards for Existing and New Sources	5512
	PSNS and PSES Option Selection - Proposal	5512
	PSNS Option Selection - Promulgation	5512
	PSES Option Selection - Promulgation	5513
	Regulated Pollutant Parameters	5513
	Pretreatment Standards	5513
XIII	BEST CONVENTIONAL POLLUTANT CONTROL TECHNOLOGY	5523

PRIMARY RARE EARTH METALS SUBCATEGORY

LIST OF TABLES

Table	Title	Page
III-1	Initial Operating Year (Range) Summary of Plants in the Primary Rare Earth Metals Subcategory by Discharge Type	5379
III-2	Production Ranges for the Primary Rare Earth Metals Subcategory	5380
III-3	Summary of Primary Rare Earth Metals Subcategory Processes and Associated Waste Streams	5381
V-1	Water Use and Discharge Rates for Dryer Vent Water Quench and Scrubber	5395
V-2	Water Use and Discharge Rates for Dryer Vent Caustic Wet Air Pollution Control	5395
V-3	Water Use and Discharge Rates for Electrolytic Cell Water Quench and Scrubber	5395
V-4	Water Use and Discharge Rates for Electrolytic Cell Caustic Wet Air Pollution Control	5396
V-5	Water Use and Discharge Rates for Sodium Hypochlorite Filter Backwash	5396
V-6	Primary Rare Earth Metals Sampling Data Dryer Vent Water Quench Raw Wastewater	5397
V-7	Primary Rare Earth Metals Sampling Data Dryer Vent Caustic Scrubber Raw Wastewater7	5407
V-8	Primary Rare Earth Metals Sampling Data Electrolytic Cell Water Quench Raw Wastewater	5417
V-9	Primary Rare Earth Metals Sampling Data Combined Raw Wastewater	5427
V-10	Primary Rare Earth Metals Sampling Data Final Effluent	5437
VI-1	Frequency of Occurrence of Priority Pollutants Primary Rare Earth Metals Raw Wastewater	5455
VI-2	Toxic Pollutants Never Detected	5459

LIST OF TABLES (Continued)

Table	Title	Page
VIII-1	Cost of Compliance for the Primary Rare Earth Metals Subcategory Direct Dischargers	5471
IX-1	BPT Wastewater Discharge Rates for the Primary Rare Earth Metals Subcategory	5479
IX-2	BPT Mass Limitations for the Primary Rare Earth Metals Subcategory	5480
X-1	Pollutant Removal Estimates for Direct Dischargers Primary Rare Earth Metals Subcategory	5493
X-2	Cost of Compliance for the Primary Rare Earth Metals Subcategory Direct Dischargers	5494
X-3	BAT Wastewater Discharge Rates for the Primary Rare Earth Metals Subcategory	5495
X-4	BAT Mass Limitations for the Primary Rare Earth Metals Subcategory	5496
XI-1	NSPS Wastewater Discharge Rates for the Primary Rare Earth Metals Subcategory	5506
XI-2	NSPS for the Primary Rare Earth Metals Subcategory	5507
XII-1	Pollutant Removal Estimates for Indirect Dischargers Primary Rare Earth Metals Subcategory	5514
XII-2	Cost of Compliance for the Primary Rare Earth Metals Subcategory Indirect Dischargers	5515
XII-3	PSES and PSNS Wastewater Discharge Rates for the Primary Rare Earth Metals Subcategory	5516
XII-4	PSES for the Primary Rare Earth Metals Subcategory	5517
XII-5	PSNS for the Primary Rare Earth Metals Subcategory	5520

LIST OF FIGURES

Figure	Title	Page
III-1	Calcium Reduction Process Primary Rare Earth Metals Subcategory	5382
III-2	Mischmetal Reduction Process Primary Rare Earth Metals Subcategory	5383
III-3	Mischmetal Production Process Primary Rare Earth Metals Subcategory	5384
III-4	Geographic Locations of the Primary Rare Earth Metals Subcategory Plants	5385
V-1	Sampling Sites at Primary Rare Earth Metals Plant	5447
IX-1	BPT Treatment Scheme for the Primary Rare Earth Metals Subcategory	5483
X-1	BAT Treatment Scheme for Option A	5499
X-2	BAT Treatment Scheme for Option B	5500
X-3	BAT Treatment Scheme for Option C	5501
X-4	BAT Treatment Scheme for Option E	5502

THIS PAGE INTENTIONALLY LEFT BLANK

SECTION I

SUMMARY

This document provides the technical basis for promulgating effluent limitations based on best practicable technology (BPT) and best available technology (BAT) for existing direct dischargers, pretreatment standards for existing indirect dischargers (PSES), pretreatment standards for new indirect dischargers (PSNS), and standards of performance for new source direct dischargers (NSPS).

At the time of promulgation, the primary rare earth metals subcategory consisted of four plants. Of the four plants, one discharges directly to a surface water, one discharges to a publicly owned treatment works (POTW), and two plants do not discharge process wastewater. Since then, one additional plant, which does not discharge process wastewater, has been located.

EPA first studied the primary rare earth metals subcategory to determine whether differences in raw materials, final products, manufacturing processes, equipment, age and size of plants, or water usage, required the development of separate effluent limitations and standards for different segments of the subcategory. This involved a detailed analysis of wastewater discharge and treated effluent characteristics, including the sources and volume of water used, the processes used, the sources of pollutants and wastewaters in the plant, and the constituents of wastewaters, including priority pollutants. As a result, five subdivisions have been identified for this subcategory that warrant separate effluent limitations. These include:

- Dryer vent water quench and scrubber,
- Dryer vent caustic wet air pollution Control,
- Electrolytic cell water quench and scrubber,
- Electrolytic cell caustic wet air pollution control, and
- Sodium hypochlorite filter backwash.

EPA also identified several distinct control and treatment technologies (both in-plant and end-of-pipe) applicable to the primary rare earth metals subcategory. The Agency analyzed both historical and newly generated data on the performance of these technologies, including their nonwater quality environmental impacts and air quality, solid waste generation, and energy requirements. EPA also studied various flow reduction techniques reported in the data collection portfolios (dcp) and plant visits.

Engineering costs were prepared for each of the control and treatment options considered for the subcategory. These costs were then used by the Agency to estimate the impact of implementing the various options on the subcategory. For each control and treatment option that the Agency found to be most

effective and technically feasible in controlling the discharge of pollutants, we estimated the number of potential closures, number of employees affected, and impact on price. These results are reported in a separate document entitled "The Economic Impact Analysis of Effluent Limitations and Standards for the Nonferrous Metals Manufacturing Industry."

After examining the various treatment technologies, the Agency has identified BPT to represent the average of the best existing technology. Metals removal based on chemical precipitation and sedimentation technology is the basis for the BPT limitations. To meet the BPT effluent limitations based on this technology, the primary rare earth metals subcategory is not expected to incur any additional capital or annual costs.

For BAT, the Agency has built upon the BPT technology basis by adding in-process control technologies which include recycle of process water from quench and wet air pollution control waste streams. Filtration is added as an effluent polishing step to the end-of-pipe treatment scheme followed by activated carbon adsorption technology for removal of toxic organics.

NSPS is equivalent to BAT. In selecting NSPS, EPA recognizes that new plants have the opportunity to implement the best and most efficient manufacturing processes and treatment technology. As such, the technology basis of BAT has been determined as the best demonstrated technology.

The technology basis for PSES is equivalent to BAT. For PSNS, the Agency selected end-of-pipe treatment and in-process flow reduction control techniques equivalent to NSPS.

To meet the effluent limitations and pretreatment standards based on the BAT-PSES technology, the primary rare earth metals subcategory is estimated to incur a capital cost of $231,100 and an annual cost of $117,200.

The best conventional technology (BCT) replaces BAT for the control of conventional pollutants. BCT is not being promulgated because the methodology for BCT has not yet been finalized.

After promulgation, the agency withdrew the BPT and BAT effluent limitations because of a procedural error in the promulgation process. The promulgated limitations and rationales are included in this document for completeness and as best professional judgment advise to permit writers should the need for such advise arise. The mass limitations and standards for BPT, BAT, NSPS, PSES, and PSNS are presented in Section II.

The 16 lanthanide group metals included as rare earth metals are cerium, dysprosium, erbium, europium, gadolinium, holmium, lanthanum, lutetium, neodymium, praseodymium, samarium, scandium, terbium, thulium, ytterbium, and yttrium.

SECTION II

CONCLUSIONS

EPA has divided the primary rare earth metals subcategory into five subdivisions for the purpose of effluent limitations and standards. These subdivisions are:

(a) Dryer vent water quench and scrubber,
(b) Dryer vent caustic wet air pollution control,
(c) Electrolytic cell water quench and scrubber,
(d) Electrolytic cell caustic wet air pollution control, and
(e) Sodium hypochlorite filter backwash.

BPT was promulgated based on the performance achievable by the application of chemical precipitation and sedimentation (lime and settle) technology. After promulgation the Agency withdrew BPT because of a procedural error. The following BPT effluent limitations were promulgated and are presented here as best professional advice:

(a) Dryer Vent Water Quench and Scrubber BPT

Pollutant or Pollutant Property	Maximum for Any One Day	Maximum for Monthly Average
mg/kg (lb/million lbs) of mischmetal produced from wet rare earth chlorides		
Chromium (Total)	4.648	1.901
Lead	4.436	2.113
Nickel	20.280	13.420
TSS	433.100	206.000
pH	Within the range of 7.5 to 10.0 at all times	

(b) Dryer Vent Caustic Wet Air Pollution Control BPT

Pollutant or Pollutant Property	Maximum for Any One Day	Maximum for Monthly Average
mg/kg (lb/million lbs) of mischmetal produced from wet rare earth chlorides		
Chromium (Total)	0.323	0.132
Lead	0.308	0.147
Nickel	1.409	0.932
TSS	30.090	14.310
pH	Within the range of 7.5 to 10.0 at all times	

(c) Electrolytic Cell Water Quench and Scrubber BPT

Pollutant or Pollutant Property	Maximum for Any One Day	Maximum for Monthly Average
mg/kg (lb/million lbs) of total mischmetal produced		
Chromium (Total)	5.580	2.283
Lead	5.326	2.536
Nickel	24.350	16.110
TSS	520.000	247.300
pH	Within the range of 7.5 to 10.0 at all times	

(d) Electrolytic Cell Caustic Wet Air Pollution Control BPT

Pollutant or Pollutant Property	Maximum for Any One Day	Maximum for Monthly Average
mg/kg (lb/million lbs) of total mischmetal produced		
Chromium (Total)	0.000	0.000
Lead	0.000	0.000
Nickel	0.000	0.000
TSS	0.000	0.000
pH	Within the range of 7.5 to 10.0 at all times	

(e) Sodium Hypochlorite Filter Backwash BPT

Pollutant or Pollutant Property	Maximum for Any One Day	Maximum for Monthly Average
mg/kg (lb/million lbs) of total mischmetal produced		
Chromium (Total)	0.159	0.065
Lead	0.152	0.072
Nickel	0.695	0.460
TSS	14.840	7.059
pH	Within the range of 7.5 to 10.0 at all times	

BAT was promulgated based on the performance achievable by the application of chemical precipitation, sedimentation, multimedia filtration, activated carbon adsorption technology, and inprocess flow reduction methods. After promulgation, the Agency withdrew BAT because of a procedural error. The following BAT effluent limitations are presented here as best professional advice for the permit writer:

(a) Dryer Vent Water Quench and Scrubber BAT

Pollutant or Pollutant Property	Maximum for Any One Day	Maximum for Monthly Average
mg/kg (lb/million lbs) of mischmetal produced from wet rare earth chlorides		
Hexachlorobenzene	0.042	0.042
Chromium (Total)	1.544	0.626
Lead	1.168	0.542
Nickel	2.295	1.544

(b) Dryer Vent Caustic Wet Air Pollution Control BAT

Pollutant or Pollutant Property	Maximum for Any One Day	Maximum for Monthly Average
mg/kg (lb/million lbs) of mischmetal produced from wet rare earth chlorides		
Hexachlorobenzene	0.007	0.007
Chromium (Total)	0.272	0.110
Lead	0.206	0.095
Nickel	0.404	0.272

(c) Electrolytic Cell Water Quench and Scrubber BAT

Pollutant or Pollutant Property	Maximum for Any One Day	Maximum for Monthly Average
mg/kg (lb/million lbs) of total mischmetal produced		
Hexachlorobenzene	0.094	0.094
Chromium (Total)	3.474	1.409
Lead	2.629	1.221
Nickel	5.165	3.474

(d) Electrolytic Cell Caustic Wet Air Pollution Control BAT

Pollutant or Pollutant Property	Maximum for Any One Day	Maximum for Monthly Average
mg/kg (lb/million lbs) of total mischmetal produced		
Hexachlorobenzene	0.000	0.000
Chromium (Total)	0.000	0.000
Lead	0.000	0.000
Nickel	0.000	0.000

(e) Sodium Hypochlorite Filter Backwash BAT

Pollutant or Pollutant Property	Maximum for Any One Day	Maximum for Monthly Average
mg/kg (lb/million lbs) of total mischmetal produced		
Hexachlorobenzene	0.004	0.004
Chromium (Total)	0.134	0.054
Lead	0.101	0.047
Nickel	0.199	0.134

NSPS are promulgated based on the performance achievable by the application of chemical precipitation, sedimentation, multimedia filtration, activated carbon technology, and in-process flow reduction methods. The following standards are promulgated for new sources:

(a) Dryer Vent Water Quench and Scrubber NSPS

Pollutant or Pollutant Property	Maximum for Any One Day	Maximum for Monthly Average
mg/kg (lb/million lbs) of mischmetal produced from wet rare earth chlorides		
Hexachlorobenzene	0.042	0.042
Chromium (Total)	1.544	0.626
Lead	1.168	0.542
Nickel	2.295	1.544
TSS	62.600	50.080
pH	Within the range of 7.5 to 10.0 at all times	

(b) Dryer Vent Caustic Wet Air Pollution Control NSPS

Pollutant or Pollutant Property	Maximum for Any One Day	Maximum for Monthly Average
mg/kg (lb/million lbs) of mischmetal produced from wet rare earth chlorides		
Hexachlorobenzene	0.007	0.007
Chromium (Total)	0.272	0.110
Lead	0.206	0.095
Nickel	0.404	0.272
TSS	11.010	8.808
pH	Within the range of 7.5 to 10.0 at all times	

(c) Electrolytic Cell Water Quench and Scrubber NSPS

Pollutant or Pollutant Property	Maximum for Any One Day	Maximum for Monthly Average
mg/kg (lb/million lbs) of total mischmetal produced		
Hexachlorobenzene	0.094	0.094
Chromium (Total)	3.474	1.409
Lead	2.629	1.221
Nickel	5.165	3.474
TSS	140.900	112.700
pH	Within the range of 7.5 to 10.0 at all times	

(d) Electrolytic Cell Caustic Wet Air Pollution Control NSPS

Pollutant or Pollutant Property	Maximum for Any One Day	Maximum for Monthly Average
mg/kg (lb/million lbs) of total mischmetal produced		
Hexachlorobenzene	0.000	0.000
Chromium (Total)	0.000	0.000
Lead	0.000	0.000
Nickel	0.000	0.000
TSS	0.000	0.000
pH	Within the range of 7.5 to 10.0 at all times	

(e) Sodium Hypochlorite Filter Backwash NSPS

Pollutant or Pollutant Property	Maximum for Any One Day	Maximum for Monthly Average
mg/kg (lb/million lbs) of total mischmetal produced		
Hexachlorobenzene	0.004	0.004
Chromium (Total)	0.134	0.054
Lead	0.101	0.047
Nickel	0 199	0.134
TSS	5.430	4.344
pH	Within the range of 7.5 to 10.0 at all times	

PSES are promulgated based on the performance achievable by the application of chemical precipitation, sedimentation, multimedia filtration, activated carbon adsorption technology, and inprocess flow reduction methods. The following pretreatment standards are promulgated for existing sources:

(a) Dryer Vent Water Quench and Scrubber PSES

Pollutant or Pollutant Property	Maximum for Any One Day	Maximum for Monthly Average
mg/kg (lb/million lbs) of mischmetal produced from wet rare earth chlorides		
Hexachlorobenzene	0.042	0.042
Chromium (Total)	1.544	0.626
Lead	1.168	0.542
Nickel	2.295	1.544

b) Dryer Vent Caustic Wet Air Pollution Control PSES

Pollutant or Pollutant Property	Maximum for Any One Day	Maximum for Monthly Average
mg/kg (lb/million lbs) of mischmetal produced from wet rare earth chlorides		
Hexachlorobenzene	0.007	0.007
Chromium (Total)	0.474	0.110
Lead	0.206	0.095
Nickel	0.404	0.272

c) Electrolytic Cell Water Quench and Scrubber PSES

Pollutant or Pollutant Property	Maximum for Any One Day	Maximum for Monthly Average
mg/kg (lb/million lbs) of total mischmetal produced		
Hexachlorobenzene	0.094	0.094
Chromium (Total)	3.474	1.409
Lead	2.629	1.221
Nickel	5.165	3.474

(d) Electrolytic Cell Caustic Wet Air Pollution Control PSES

Pollutant or Pollutant Property	Maximum for Any One Day	Maximum for Monthly Average
mg/kg (lb/million lbs) of total mischmetal produced		
Hexachlorobenzene	0.000	0.000
Chromium (Total)	0.000	0.000
Lead	0.000	0.000
Nickel	0.000	0.000

(e) Sodium Hypochlorite Filter Backwash PSES

Pollutant or Pollutant Property	Maximum for Any One Day	Maximum for Monthly Average
mg/kg (lb/million lbs) of total mischmetal produced		
Hexachlorobenzene	0.004	0.004
Chromium (Total)	0.134	0.054
Lead	0.101	0.047
Nickel	0.199	0.134

PSNS are promulgated based on the performance achievable by the application of chemical precipitation, sedimentation, multimedia filtration, activated carbon adsorption technology, and in-process flow reduction methods. The following pretreatment standards are promulgated for new sources:

(a) Dryer Vent Water Quench and Scrubber PSNS

Pollutant or Pollutant Property	Maximum for Any One Day	Maximum for Monthly Average
mg/kg (lb/million lbs) of mischmetal produced from wet rare earth chlorides		
Hexachlorobenzene	0.042	0.042
Chromium (Total)	1.544	0.626
Lead	1.168	0.543
Nickel	2.295	1.544

(b) Dryer Vent Caustic Wet Air Pollution Control PSNS

Pollutant or Pollutant Property	Maximum for Any One Day	Maximum for Monthly Average
mg/kg (lb/million lbs) of mischmetal produced from wet rare earth chlorides		
Hexachlorobenzene	0.007	0.007
Chromium (Total)	0.272	0.110
Lead	0.206	0.095
Nickel	0.404	0.272

(c) Electrolytic Cell Water Quench and Scrubber PSNS

Pollutant or Pollutant Property	Maximum for Any One Day	Maximum for Monthly Average
mg/kg (lb/million lbs) of total mischmetal produced		
Hexachlorobenzene	0.094	0.094
Chromium (Total)	3.474	1.409
Lead	2.629	1.221
Nickel	5.165	3.474

(d) Electrolytic Cell Caustic Wet Air Pollution Control PSNS

Pollutant or Pollutant Property	Maximum for Any One Day	Maximum for Monthly Average
mg/kg (lb/million lbs) of total mischmetal produced		
Hexachlorobenzene	0.000	0.000
Chromium (Total)	0.000	0.000
Lead	0.000	0.000
Nickel	0.000	0.000

(e) Sodium Hypochlorite Filter Backwash PSNS

Pollutant or Pollutant Property	Maximum for Any One Day	Maximum for Monthly Average
mg/kg (lb/million lbs) of total mischmetal produced		
Hexachlorobenzene	0.004	0.004
Chromium (Total)	0.134	0.054
Lead	0.101	0.047
Nickel	0.199	0.134

EPA is not promulgating best conventional technology (BCT) at this time for the primary rare earth metals subcategory.

THIS PAGE INTENTIONALLY LEFT BLANK

SECTION III

SUBCATEGORY PROFILE

This section of the primary rare earth metals supplement describes the raw materials and processes used in producing primary rare earth metals and presents a profile of the primary rare earth metals plants identified in this study.

Rare earth metals are presently used in areas such as metallurgy, ceramics, and electrical and lighting applications A mixture of individual rare earth metals and iron called mischmetal is the rare earth metal predominately used in metallurgy. It is added to select alloys to increase hardness, electrical and thermal conductivity, and to improve high temperature characteristics with respect to strength and resistance to oxidation. Mischmetal is also the main ingredient of lighter flints. In ceramics, rare earth metals are used in pigments, heating elements, and in dielectric and conductive ceramics. Electrical and lighting applications include using rare earth metal phosphors in color television tubes, radar screens thermometers, low and high pressure mercury vapor lamps, and trichromatic fluorescent lights. Rare earth permanent magnets are used in electric motors, alternators, line printers, and disk drive actuators as well as other applications.

DESCRIPTION OF PRIMARY RARE EARTH METALS PRODUCTION

In this supplement the production of rare earth metals will focus primarily on the production of individual metals of the lanthanide group and on the production of mischmetal. The production processes for manufacturing individual rare earth metals include calcium reduction, mischmetal reduction and solvent extraction.

Two process operations are used in the production of mischmetal. Mischmetal is an alloy typically composed of cerium, lanthanum, neodymium, praseodymium, other rare earth metals, and iron, with cerium being the greatest constituent and iron the smallest. In the first operation, the raw material is dehydrated, and in the second operation, the dried raw material is electrolytically reduced to metal. Wastewater is generated during the production of mischmetal while the production of individual rare earth metals does not generates process wastewater.

The following paragraphs will further explain these operations and processes. A schematic diagram for the calcium reduction process is shown in Figure III-1 (page 5382). The mischmetal reduction process is shown in Figure III-2 (page 5383). The mischmetal production process is shown in Figure III-3 (page 5384).

RAW MATERIALS

The raw materials that are used by the plants in the primary rare earth metals subcategory are rare earth metal oxides, metal hydroxides, metal chlorides, and metal fluoride.

Depending on their availability. rare earth metal oxides, hydroxides, chlorides, and fluorides are obtained from foreign or domestic companies which mine, separate, and concentrate ores containing rare earth metals.

CALCIUM REDUCTION

Ten of the 14 lanthanide group metals are produced by calcium reduction. These include lanthanum, cerium, praseodymium, neodymium, gadolinium, terbium, dysprosium, holmium, erbium, and lutetium, as well as scandium and yttrium. The raw material form of these metals is the metal fluoride. The individual metal fluoride is placed with calcium metal into a reduction vessel where a heat-driven reaction produces pure rare earth metal and calcium fluoride. The metals are further purified by melting in a vacuum to remove impurities. Casting is dependent upon the form in which a buyer wants the metal. Non-contact cooling water is used to cool both the reduction vessel and the melting and casting equipment. No process wastewater is generated in the calcium reduction process.

MISCHMETAL REDUCTION

The last four of the lanthanide group metals, samarium, europium, thulium, and ytterbium, are produced by mischmetal reduction. Mischmetal reduces the oxide form of these metals to an elemental form. In this reaction the mischmetal acts as a reducing agent and is oxidized to a mixture of rare earth metal oxides. The process is performed at low pressure and a temperature below the melting point so that the metals vaporize or sublime. The pure metal is condensed and collected in a crystalline mass of high purity. These solids may be crushed into powder or melted and cast if a solid product form is desired. Water use in this process is limited to noncontact cooling, thus no process wastewater streams are generated by this production process.

PRODUCTION OF MISCHMETAL

Raw Material Dehydration: Wet rare earth chlorides or hydrated rare earth chloride compounds must be stripped of their water before electrolytic reduction can take place. This is to prevent decay of the graphite anode during electrolysis. The anode could be decayed by the reaction of the liberated oxygen in the electrolyte with the carbon anode to form carbon dioxide. Batch or continuous mode dryers may be used. Both gas heat and electric heat have been used to run the dehydration furnaces. The off-gases from the furnaces are treated by water or alkaline scrubbers to scrub particulates and acid from the off-gases. The treated gases are vented and and the scrubber liquor may be

discharged to wastewater treatment.

Electrolytic Reduction: Dry rare earth chlorides are reduced to mischmetal in electrolytic cells. Batch process electrolysis reduces the rare earth salts to metal in eight to 12 hours. Excess slag is removed and may be sold for its rare earth chlorides content. Off-gases from electrolytic reduction include chlorine gas, carbon monoxide and carbon dioxide gases from the carbon in the graphite anodes, and hydrochloric acid fumes. These gases are contacted with water to cool the gases and absorb particulates and hydrochloric acid vapors. The partially cleansed gases are then contacted with sodium hydroxide solution where sodium hypochlorite is formed. After a sufficient hypochlorite concentration is attained, the solution may be sold as a by product.

Since the composition of mischmetal is defined within certain limits, the quantities and types of rare earth chloride raw materials must be properly proportioned as they are added to the electrolytic reduction cell to produce the specified mischmetal composition. Following the reduction process, the mischmetal is cast into bars or ingots for future uses primarily in metallurgy.

PROCESS WASTEWATER SOURCES

The process wastewater sources for the primary rare earth metals subcategory are subdivided as follows:

1. Dryer vent water quench and scrubber,
2. Dryer vent caustic wet air pollution control,
3. Electrolytic cell water quench and scrubber,
4. Electrolytic cell caustic wet air pollution control, and
5. Sodium hypochlorite filter backwash.

The building blocks used at proposal were revised because of new information provided to the Agency after proposal. Subdivisions 1 and 2 which were a single building block at proposal were separated at promulgation because not all plants incorporate both subdivisions in their process operations.

Information was also supplied in comments after proposal for a sodium hypochlorite filter backwash wastewater stream. The Agency did not give this wastewater stream an allowance at proposal because no plant had reported it in their dcp. However, in response to industry comments, EPA has promulgated discharge standards for this wastewater stream.

OTHER WASTEWATER SOURCES

There may be other wastewater streams associated with the primary rare earth metals subcategory. These streams may include noncontact cooling water, maintenance and cleanup water, and stormwater runoff. These wastewater streams are not considered as a part of this rulemaking. EPA believes that the flows and pollutant loadings associated with these streams are

insignificant relative to the wastewaters selected and are best handled by the appropriate permit authority on a case-by-case basis under authority of Section 402 of the Clean Water Act.

AGE, PRODUCTION, AND PROCESS PROFILE

Figure III-4 (page 5385) shows the locations of the primary rare earth metals plants identified in this study. Three are located in the Eastern United States while one is in the southwestern region.

Table III-1 (page 5379) shows the relative age and discharge status of the primary rare earth metals plants. Two of the plants are noticeably older than the others. Table III-2 (page 5380) shows the relative production for the primary rare earth metals plants for 1982.

Mischmetal is the rare earth metal that is produced in greatest volume, but most of the plants that manufacture mischmetal also manufacture other alloys and pure rare earth metals and powders.

Table III-3 (page 5381) provides a summary of the number of plants generating wastewater for the waste streams associated with various processes, and the number of plants with the process.

Table III-1

INITIAL OPERATING YEAR (RANGE) SUMMARY OF PLANTS IN THE PRIMARY RARE EARTH METALS SUBCATEGORY BY DISCHARGE TYPE

	Initial Operating Year (Range) (Plant Age In Years)						
Type of Plant	1983-1968 (0-16)	1967-1958 (17-26)	1957-1948 (27-36)	1947-1928 (37-56)	1927-1918 (57-66)	1917-1908 (67-76)	Total
Direct	1	0	0	0	0	0	1
Indirect	0	0	0	0	0	1	1
Zero	0	1	0	0	0	1	2
TOTAL	1	1	0	0	0	2	4

TABLE III-2

PRODUCTION RANGES
FOR THE PRIMARY RARE EARTH METALS SUBCATEGORY

These data are not presented here because they have been claimed to be confidential.

Table III-3

SUMMARY OF PRIMARY RARE EARTH METALS SUBCATEGORY PROCESSES AND ASSOCIATED WASTE STREAMS

Process	Number of Rare Earth Metals Plants With Process	Number of Plants Reporting Generation of Wastewater*
Calcium Reduction	1	0
Mischmetal Reduction	2	0
Production of Mischmetal	2	2
Dryer Vent Water Quench and Scrubber	2	2
Dryer Vent Caustic Wet Air Pollution Control	1	1
Electrolytic Cell Water Quench and Scrubber	2	2
Electrolytic Cell Caustic Wet Air Pollution Control	2	0
Sodium Hypochlorite Filter Backwash	1	1

*Through reuse, evaporation practices, or by-product recovery, a plant may "generate" wastewater from a particular process but not discharge it.

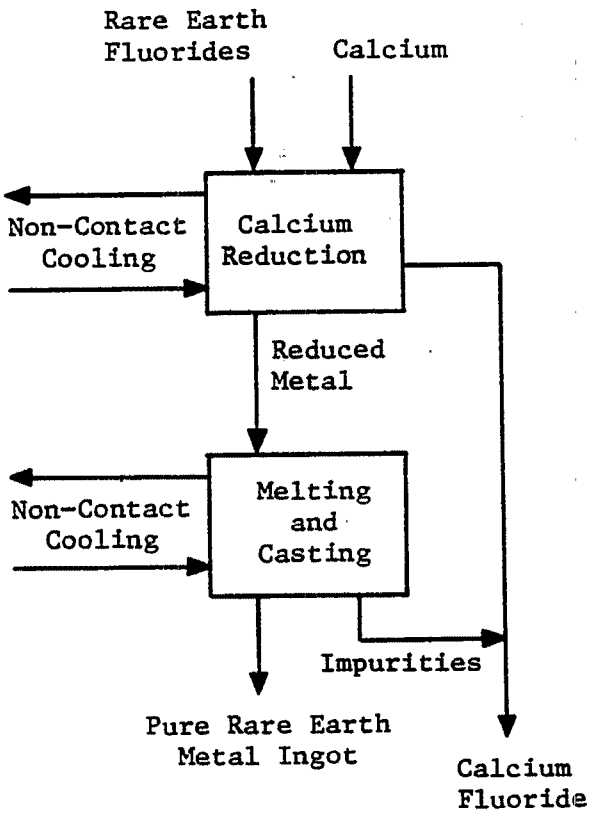

Figure III-1

CALCIUM REDUCTION PROCESS
PRIMARY RARE EARTH METALS SUBCATEGORY

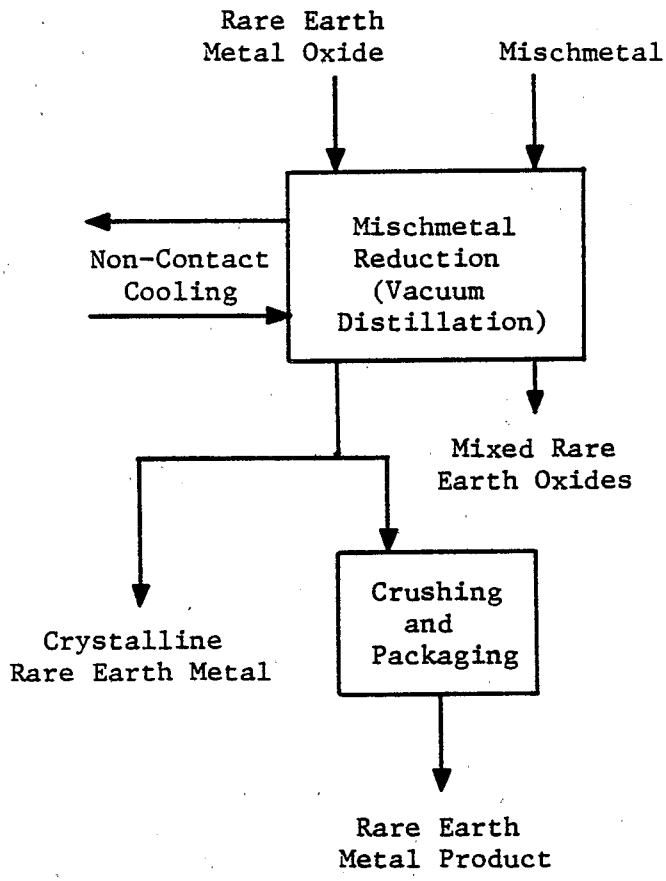

Figure III-2

MISCHMETAL REDUCTION PROCESS
PRIMARY RARE EARTH METALS SUBCATEGORY

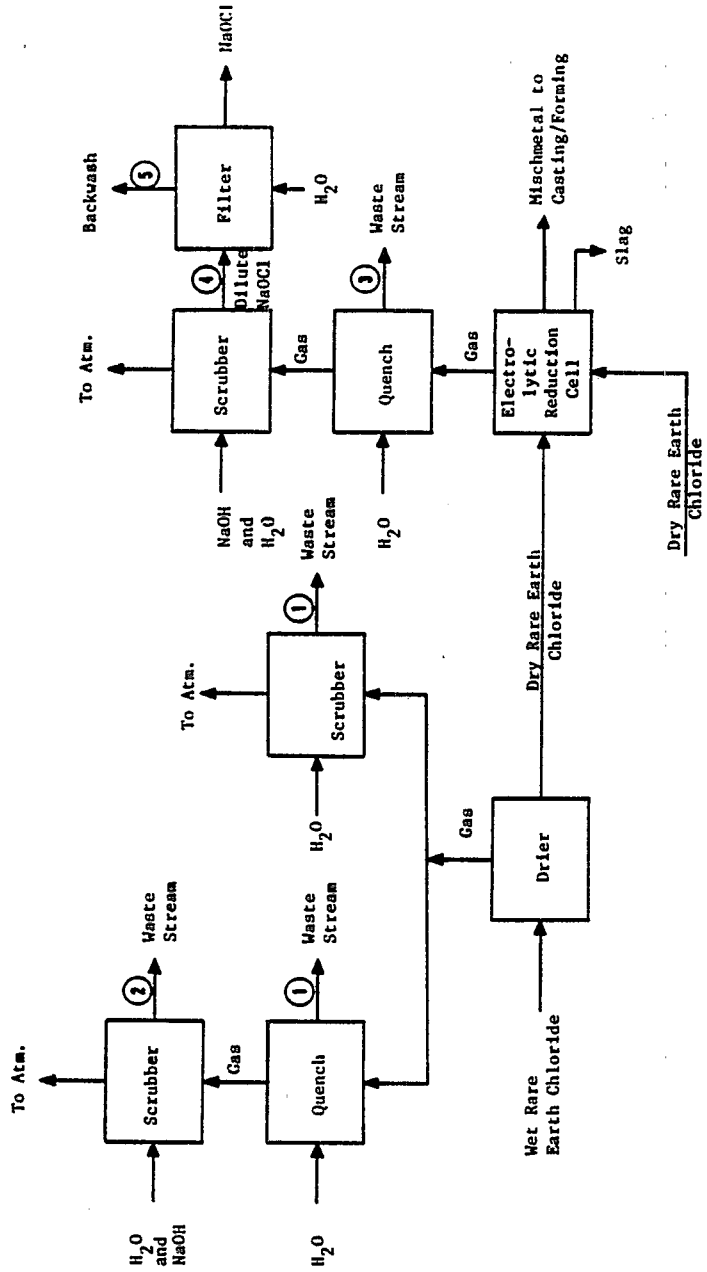

Figure III-3
MISCHMETAL PRODUCTION PROCESS
PRIMARY RARE EARTH METALS SUBCATEGORY

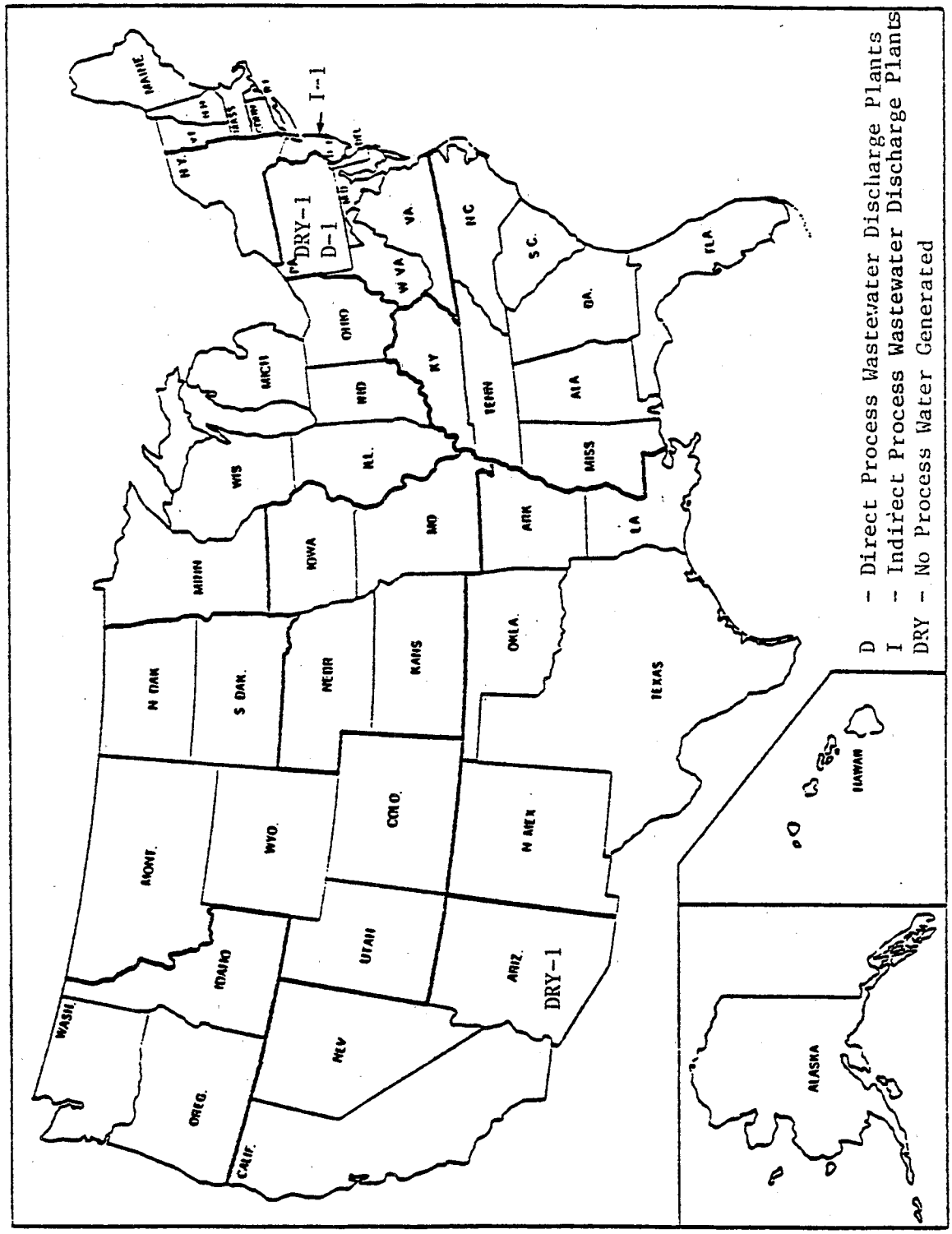

Figure III-4

GEOGRAPHIC LOCATIONS OF THE PRIMARY RARE EARTH METALS SUBCATEGORY PLANTS

THIS PAGE INTENTIONALLY LEFT BLANK

SECTION IV

SUBCATEGORIZATION

This section summarizes the factors considered during the designation of the related subdivisions of the primary rare earth metals subcategory. Production normalizing parameters for each subdivision are also discussed.

FACTORS CONSIDERED IN SUBDIVIDING THE PRIMARY RARE EARTH METALS SUBCATEGORY

The factors listed previously for general subcategorization were each evaluated when considering subdivision of the primary rare earth metals subcategory. In the discussion that follows, the factors will be discussed as they pertain to this particular subcategory.

The rationale for considering further subdivision of the primary rare earth metals subcategory is based primarily on differences in the production process and raw materials used. Within this subcategory, five primary operations are performed which include water use and wastewater discharge, and which require the establishment of separate effluent limitations. While the primary rare earth metals subcategory is still considered a single subcategory, a more thorough examination of the production processes has illustrated the need for limitations based on specific flow allowances for the following subdivisions:

1. Dryer vent water quench and scrubber,
2. Dryer vent caustic wet air pollution control,
3. Electrolytic cell water quench and scrubber,
4. Electrolytic cell caustic wet air pollution control, and
5. Sodium hypochlorite filter backwash.

The first two subdivisions result from the use of different gas cleaning systems when the raw material -- hydrated rare earth chlorides -- is dried. When these salts are in a hydrated form, they require drying to inhibit anode decay. The use of a water quench to cool the gases and collect particulates and the use of a caustic scrubber each require a different wastewater flow rate.

The third and fourth subdivisions arise from the cleaning of gases generated by the operation used to reduce dried, mixed rare earth chlorides to mischmetal. In the electrolytic reduction, chlorine gas and hydrochloric acid are primary constituents of the off-gases. A water quench or water scrubber is employed to cool the gases, absorb much of the hydrochloric acid fumes, and collect particulates. Caustic is used to react the chlorine gas to form sodium hypochlorite which is sold as a by-product. A separate subdivision has been assigned to each of these operations to account for their wastewater discharge.

The fifth subdivision results from filtration of the sodium

hypochlorite by-product prior to sale. Depending on the type of filter in use, backwash may be necessary for efficient operation of the filter. This subdivision accounts for the discharge from backwashing such a filter.

OTHER FACTORS

The other factors considered in this evaluation were shown to be inappropriate as a basis for subdivision. Air pollution control methods, treatment costs, and total energy requirements are functions of the selected subcategorization factors--metal product, raw materials, and production processes. Therefore, they are not independent factors and do not affect the subcategorization which has been applied. Certain other factors, such as plant age, plant size, and the number of employees, were also evaluated and determined to be inappropriate for use as a basis for subdivision of nonferrous metals plants.

PRODUCTION NORMALIZING PARAMETERS

As discussed previously, the effluent limitations and standards developed in this document establish mass limitations on the discharge of specific pollutant parameters. To allow these regulations to be applied to plants with various production capacities, the mass of pollutant discharged must be related to a unit of production. This factor is known as the production normalizing parameter (PNP).

In general, for each production process which has a wastewater associated with it, the actual mass of rare earth mineral or intermediate product will be used as the PNP. Thus, the PNPs for the five subdivisions are as follows:

Subdivision	PNP
1. Dryer vent water quench and scrubber	mischmetal produced from wet rare earth chlorides
2. Dryer vent caustic wet air pollution control	mischmetal produced from wet rare earth chlorides
3. Electrolytic cell water quench and scrubber	total mischmetal produced
4. Electrolytic cell caustic wet air pollution control	total mischmetal produced
5. Sodium hypochlorite filter backwash	total mischmetal produced

SECTION V

WATER USE AND WASTEWATER CHARACTERISTICS

This section describes the characteristics of the wastewaters associated with the primary rare earth metals subcategory. Water use and discharge rates are explained and then summarized in tables at the end of this section. Data used to characterize the wastewaters are presented. Finally, the specific source, water use and discharge flows, and wastewater characteristics for each separate wastewater source are discussed.

The two principal data sources used in collecting data for this study are data collection portfolios (dcp) and field sampling results. Data collection portfolios contain information regarding wastewater flows and production levels.

In order to quantify the pollutant discharge from primary rare earth metals plants, a field sampling program was conducted. Wastewater samples were analyzed for 124 of the 126 priority pollutants and other pollutants deemed appropriate. Because the analytical standard for TCDD was judged to be too hazardous to be made generally available, samples were never analyzed for this pollutant. Samples were also never analyzed for asbestos. There is no reason to expect that TCDD or asbestos would be present in nonferrous metals manufacturing wastewater. One plant was selected for sampling in the primary rare earth metals subcategory. In general, the samples were analyzed for three classes of pollutants: toxic organic pollutants, toxic metal pollutants, and criteria pollutants (which includes both conventional and nonconventional pollutants).

No additional sampling data for this subcategory were obtained between proposal and promulgation. Characterization of primary rare earth metals subcategory wastewaters (Section V), and selection of pollutant parameters for limitation (Section VI) are based upon the same data used for proposal.

Additional wastewater flow and production data were received through industry comments between proposal and promulgation. This aided EPA in determining subdivisions needed to proper characterize the subcategory and to calculate the the appropriate discharge allowances for all of the subdivisions.

As described in Section IV of this supplement, the primary rare earth metals subcategory has been split into five subdivisions or wastewater sources, so that the promulgated regulation contains mass discharge limitations and standards for five unit processes discharging process wastewater. Differences in the wastewater characteristics associated with these subdivisions are to be expected. For this reason, wastewater streams corresponding to each subdivision are addressed separately in the discussions that follow. These wastewater sources are:

1. Dryer vent water quench and scrubber,
2. Dryer vent caustic wet air pollution control,
3. Electrolytic cell water quench and scrubber,
4. Electrolytic cell caustic wet air pollution control, and
5. Sodium hypochlorite filter backwash.

WASTEWATER FLOW RATES

Data supplied by dcp responses were evaluated, and two flow-to-production ratios, water use and wastewater discharge, were calculated for each stream. The two ratios are differentiated by the flow value used in calculation. Water use is defined as the volume of water or other fluid required for a given process per mass of rare earth product and is therefore based on the sum of recycle and make-up flows to a given process. Wastewater flow discharged after pretreatment or recycle (if these are present) is used in calculating the production normalized flow--the volume of wastewater discharged from a given process to further treatment, disposal, or discharge per mass of rare earth product. Differences between the water use and wastewater flows associated with a given stream result from recycle, evaporation, and carry-over on the product. The production values used in calculation correspond to the production normalizing parameter, PNP, assigned to each stream, as outlined in Section IV. As an example, sodium hypochlorite filter backwash flow is related to the total production of mischmetal. As such, the discharge rate is expressed in liters of filter backwash wastewater per metric ton of total mischmetal produced (gallons of filter backwash wastewater per ton of total mischmetal produced).

The production normalized discharge flows were compiled and statistically analyzed by stream type. These production normalized water use and discharge flows are presented by subdivision in Tables V-1 through V-5 at the end of this section. Where appropriate, an attempt was made to identify factors that could account for variations in water use and discharge rates. These variations are discussed later in this section by subdivision. A similar analysis of factors affecting the wastewater flows is presented in Sections IX, X, XI, and XII where representative BPT, BAT, NSPS, and pretreatment flows are selected for use in calculating the effluent limitations.

The water use and discharge rates shown do not include nonprocess wastewater, such as rainfall runoff and noncontact cooling water.

WASTEWATER CHARACTERISTICS DATA

Data used to characterize the various wastewaters associated with the primary rare earth metals subcategory come from these sources--data collection portfolios, analytical data from field sampling trips, and comments submitted on the proposed regulation.

DATA COLLECTION PORTFOLIOS

In the data collection portfolios, the rare earth metals plants that discharge wastewater were asked to specify the presence or absence of toxic pollutants in their wastewater. Only one plant submitted partial information in response to this request. For this reason, insufficient data were available from the data collection portfolios to be presented at proposal as being representative of the wastewater characteristics of the subcategory. However, after proposal additional data and information were submitted by the industry which allowed EPA to determine the wastewater characteristics of the subcategory.

FIELD SAMPLING DATA

In order to quantify the concentrations of pollutants present in wastewater from primary rare earth metals plants, wastewater samples were collected at one of the plants belonging to this subcategory. A diagram indicating the sampling sites, waste streams and production processes is shown in Figure V-1 (page 5447)

Tables V-6 through V-10 (pages 5397 - 5437) summarize the data for 124 priority pollutants as well as other pollutants that were considered appropriate to this subcategory. Sampling was done at five points which included the primary waste streams associated with the production process and other sampling points as will be clarified further. Tables V-6 and V-7 (pages 5397 - 5407) show data taken from the dryer vent water quench stream and the dryer vent caustic scrubber waste stream. Table V-8 tabulates the analysis of the quench water from the electrolytic reduction process of rare earth chlorides. Table V-9 shows the analysis of the combined waste streams from the entire plant just before treatment, and Table V-10 is the analysis of the final effluent from this plant. Note that the stream numbers listed in the tables correspond to those given in the plant sampling site diagram, Figure V-1. Where no data are listed for a specific day of sampling, the wastewater samples for the stream were not collected.

The data tables include some samples measured at concentrations considered not quantifiable. The base-neutral extractable, acid extractable, and volatile organics generally are considered not quantifiable at concentrations equal to or less than 0.010 mg/l. Below this concentration, organic analytical results are not quantitatively accurate; however, the analyses are useful to indicate the presence of a particular pollutant. The pesticide fraction is considered not quantifiable at concentrations equal to or less than 0.005 mg/l.

The detection limits shown on the data tables for toxic metals and conventional and nonconventional pollutants are not the same in all cases as the published detection limits for these pollutants by the same analytical methods. The detection limits used were reported with the analytical data and hence are the

appropriate limits to apply to the data. Detection limit variation can occur as a result of a number of laboratory-specific, equipment-specific, and daily operator-specific factors. These factors can include day-to-day differences in machine calibration, variation in stock solutions, and variation in operators.

The statistical analysis of data includes some samples measured at concentrations considered not quantifiable. For data considered as detected but below quantifiable concentrations, a value of zero is used for averaging. Priority organic, nonconventional, and conventional pollutant data reported with a "less than" sign are considered as detected, but not further quantifiable. A value of zero is also used for averaging. If a pollutant is reported as not detected, it is assigned a value of zero in calculating the average. Finally, priority metal values reported as less than a certain value were considered as not quantifiable, and consequently were assigned a value of zero in the calculation of the average.

Finally, appropriate source water concentrations are presented with the summaries of the sampling data. The method by which each sample was collected is indicated by number, as follows:

1 one-time grab
2 manual composite during intermittent process operation
3 8-hour manual composite
4 8-hour automatic composite
5 24-hour manual composite
6 24-hour automatic composite

WASTEWATER CHARACTERISTICS AND FLOWS BY SUBDIVISION

Since rare earth metals production involves five principal sources of wastewater and each has potentially different characteristics and flows, each waste stream, or subdivision, is discussed separately. Below is a discussion of each subdivision including a description of the process, where the wastewater is generated, and the wastewater flow and characteristics.

DRYER VENT WATER QUENCH AND SCRUBBER

Wet rare earth chlorides are dried before reduction to metal by passing the wet chlorides through a furnace or drier. A wet air pollution control system first cools the drier fumes and collects flue dust. The scrubber liquor is discharged to wastewater treatment and the gases vented to the atmosphere. The pH of this quench water is approximately 1-5. The second stage will be discussed in the next subdivision.

Table V-1 (page 5395) presents the production normalized water use and discharge flows for the operations described above in liters per metric ton of mischmetal produced from wet rare earth chlorides. Table V-6 (page 5397) shows detailed analyses of the constituents of this wastewater stream. From the data it can be

seen that this stream is characterized by acidic pH, treatable concentrations of some toxic metals such as nickel, and treatable concentrations of suspended solids.

DRYER VENT CAUSTIC WET AIR POLLUTION CONTROL

Following the dryer vent water scrubber or quench, a caustic scrubber is used to remove acid vapors from the vent gases. Scrubber liquor is presently recycled and the bleed stream is discharged to treatment.

Table V-2 (page 5395) presents the production normalized water use and discharge flows for the caustic scrubber in liters per metric ton of mischmetal produced from wet rare earth chlorides. Table V-7 (page 5407) presents detailed analyses of the constituents in this wastewater stream. These data characterize the caustic scrubber wastewater as having a high pH, treatable concentrations of toxic metals such as chromium, lead, nickel, and thallium, and treatable concentrations of suspended solids.

ELECTROLYTIC CELL WATER QUENCH AND SCRUBBER

Dry rare earth chlorides are placed into cells usually lined with graphite carbon. The salts are electrolytically reduced to mischmetal, the composition of which is dictated by the mixture of rare earth chlorides fed into the cells. The reduction process produces chlorine gas, as well as carbon monoxide and carbon dioxide gases. Water quench or water scrubbers cool these gases and trap particulate matter as well as vaporized hydrochloric acid.

Wastewater from this operation contains treatable concentrations of lead, acidic pH, and treatable concentrations of hexachlorobenzene. Table V-3 (page 5395) presents production normalized water use and discharge rates for this operation in liters per metric ton of total mischmetal produced. Table V-8 reports field sampling data on electrolytic cell water quench and scrubber.

ELECTROLYTIC CELL CAUSTIC WET AIR POLLUTION CONTROL

The caustic wet air pollution control system following the water quench or water scrubber is designed to recover chlorine present in the gas stream. Sodium hydroxide is circulated through the scrubber and the reaction with chlorine forms sodium hypochlorite. When a 12 to 15 percent sodium hypochlorite concentration is attained, the solution is drawn off and sold for industrial use.

Table V-4 (page 5396) shows that the production normalized discharge flow for this subdivision is zero. This is because both plants having the scrubber operation achieve zero discharge through recovery of the scrubber liquor as a salable by-product, sodium hypochlorite.

SODIUM HYPOCHLORITE FILTER BACKWASH

Sodium hypochlorite produced in the electrolytic cell caustic scrubber may contain particulate matter. In order to produce a marketable product, the sodium hypochlorite is filtered. Depending on the type of filter used, backwashing may be necessary to insure efficient operation of the filter.

This wastewater stream was not directly sampled. However, EPA believes its characteristics will be similar to those of the dryer vent caustic scrubber wastewater. The filter backwash wastewater may be characterized by high pH, high values of chloride and other dissolved solids, and treatable concentrations of suspended solids.

TABLE V-1

WATER USE AND DISCHARGE RATES FOR
DRYER VENT WATER QUENCH AND SCRUBBER

(l/kkg of mischmetal produced from
wet rare earth chlorides)

Plant Code	Recycle	Production Normalized Water Use	Production Normalized Discharge Flow
1106	NA	NA	4173
1113	0	10563	10563

TABLE V-2

WATER USE AND DISCHARGE RATES FOR
DRYER VENT CAUSTIC WET AIR POLLUTION CONTROL

(l/kkg of mischmetal produced from
wet rare earth chlorides)

Plant Code	Recycle	Production Normalized Water Use	Production Normalized Discharge Flow
1113	90	10563	10563

TABLE V-3

WATER USE AND DISCHARGE RATES FOR
ELECTROLYTIC CELL WATER QUENCH AND SCRUBBER

(l/kkg of total mischmetal produced)

Plant Code	Recycle	Production Normalized Water Use	Production Normalized Discharge Flow
1106	NA	NA	9390
1113	0	12682	12682

PRIMARY RARE EARTH METALS SUBCATEGORY SECT - V

Table V-6 (Continued)

PRIMARY RARE EARTH METALS SAMPLING DATA
DRYER VENT WATER QUENCH
RAW WASTEWATER

Pollutant	Stream Code	Sample Type†	Concentrations (mg/l) Source	Day 1	Day 2	Day 3
Toxic Pollutants (Continued)						
71. dimethyl phthalate	429	5	ND	ND	ND	ND
72. benzo(a)anthracene	429	5	ND	ND	ND	ND
73. benzo(a)pyrene	429	5	ND	ND	ND	ND
74. benzo(b)fluoranthene	429	5	ND	ND	ND	ND
75. benzo(k)fluoranthane	429	5	ND	ND	ND	ND
76. chrysene	429	5	ND	ND	ND	ND
77. acenaphthylene	429	5	ND	ND	ND	ND
78. anthracene (a)	429	5	ND	ND	ND	ND
79. benzo(ghi)perylene	429	5	ND	ND	ND	ND
80. fluorene	429	5	ND	ND	ND	ND
81. phenanthrene (a)	429	5	ND	ND	ND	ND
82. dibenzo(a,h)anthracene	429	5	ND	ND	ND	ND
83. indeno (1,2,3-c,d)pyrene	429	5	ND	ND	ND	ND
84. pyrene	429	5	ND	ND	ND	ND

Table V-6 (Continued)

PRIMARY RARE EARTH METALS SAMPLING DATA
DRYER VENT WATER QUENCH
RAW WASTEWATER

Pollutant	Stream Code	Sample Type†	Concentrations (mg/l) Source	Day 1	Day 2	Day 3
Toxic Pollutants (Continued)						
85. tetrachloroethylene	429	1	ND	ND	ND	ND
86. toluene	429	1	ND	ND	0.001	ND
87. trichloroethylene	429	1	ND	ND	ND	ND
88. vinyl chloride (chloroethylene)	429	1	ND	ND	ND	ND
89. aldrin	429	5	ND	ND	ND	ND
90. dieldrin	429	5	ND	ND	ND	ND
91. chlordane	429	5	ND	ND	ND	ND
92. 4,4'-DDT	429	5	ND	ND	ND	ND
93. 4,4'-DDE	429	5	ND	ND	ND	ND
94. 4,4'-DDD	429	5	ND	ND	ND	ND
95. alpha-endosulfan	429	5	ND	ND	ND	ND
96. beta-endosulfan	429	5	ND	ND	ND	ND
97. endosulfan sulfate	429	5	ND	ND	ND	ND
98. endrin	429	5	ND	ND	ND	ND

Table V-6 (Continued)

PRIMARY RARE EARTH METALS SAMPLING DATA
DRYER VENT WATER QUENCH
RAW WASTEWATER

Pollutant	Stream Code	Sample Type†	Concentrations (mg/l) Source	Day 1	Day 2	Day 3
Toxic Pollutants (Continued)						
99. endrin aldehyde	429	5	ND	ND	ND	ND
100. heptachlor	429	5	ND	ND	ND	ND
101. heptachlor epoxide	429	5	ND	ND	ND	ND
102. alpha-BHC	429	5	ND	ND	ND	ND
103. beta-BHC	429	5	ND	ND	ND	ND
104. gamma-BHC	429	5	ND	ND	ND	ND
105. delta-BHC	429	5	ND	ND	ND	ND
106. PCB-1242 (b)	429	5	ND	ND	ND	ND
107. PCB-1254 (b)	429	5	ND	ND	ND	ND
108. PCB-1221 (b)	429	5	ND	ND	ND	ND
109. PCB-1232 (c)	429	5	ND	ND	ND	ND
110. PCB-1248 (c)	429	5	ND	ND	ND	ND
111. PCB-1260 (c)	429	5	ND	ND	ND	ND
112. PCB-1016 (c)	429	5	ND	ND	ND	ND

Table V-6 (Continued)

PRIMARY RARE EARTH METALS SAMPLING DATA
DRYER VENT WATER QUENCH
RAW WASTEWATER

Pollutant	Stream Code	Sample Type†	Concentrations (mg/l) Source	Day 1	Day 2	Day 3
Toxic Pollutants (Continued)						
113. toxaphene	429	5	ND	ND	ND	ND
114. antimony	429	5	<0.005	<0.005	<0.005	0.010
115. arsenic	429	5	0.160	0.067	<0.005	<0.005
117. beryllium	429	5	<0.001	<0.001	<0.001	<0.001
118. cadmium	429	5	<0.001	<0.001	0.002	<0.001
119. chromium (total)	429	5	0.005	0.029	0.005	0.007
120. copper	429	5	0.02	0.005	0.019	0.027
121. cyanide (total)	429	1	0.002	0.006	0.032	0.012
122. lead	429	5	<0.001	0.024	0.010	0.033
123. mercury	429	5	<0.0002	<0.0002	<0.0002	<0.0002
124. nickel	429	5	0.001	0.002	0.005	0.69
125. selenium	429	5	<0.005	0.13	0.012	0.044
126. silver	429	5	<0.001	0.002	<0.001	0.077
127. thallium	429	5	<0.001	<0.001	<0.001	<0.001

Table V-6 (Continued)

PRIMARY RARE EARTH METALS SAMPLING DATA
DRYER VENT WATER QUENCH
RAW WASTEWATER

Pollutant	Stream Code	Sample Type†	Concentrations (mg/l) Source	Day 1	Day 2	Day 3
Toxic Pollutants (Continued)						
128. zinc	429	5	0.02	0.02	0.03	0.02
Nonconventional Pollutants						
Iron	429	5	0.16	0.41	0.55	0.46
Phenolics	429	1	0.031	0.007	0.011	0.005
Total Solids (TS)	429	5		240	280	250
Conventional Pollutants						
Oil and Grease	429	1	<1	<1	4.1	3.4
Total Suspended Solids (TSS)	429	5		20	5	3
pH (standard units)	429	5	7.9	1.7	1.6	1.3

†Sample Type Code: 1 - One-time grab
5 - 24-hour manual composite

(a),(b),(c) Reported together

Table V-7

PRIMARY RARE EARTH METALS SAMPLING DATA
DRYER VENT CAUSTIC SCRUBBER
RAW WASTEWATER

Pollutant	Stream Code	Sample Type†	Concentrations (mg/l) Source	Day 1	Day 2	Day 3
Toxic Pollutants						
1. acenaphthene	431	1	ND	ND	ND	
2. acrolein	431	1	ND	ND	ND	
3. acrylonitrile	431	1	ND	ND	ND	
4. benzene	431	1	0.009	0.010	0.018	
5. benzidine	431	5	ND	ND	ND	
6. carbon tetrachloride	431	1	ND	ND	ND	
7. chlorobenzene	431	1	ND	ND	ND	
8. 1,2,4-trichlorobenzene	431	1	ND	ND	ND	
9. hexachlorobenzene	431	1	ND	0.009	ND	
10. 1,2-dichloroethane	431	1	ND	ND	ND	
11. 1,1,1-trichloroethane	431	1	ND	ND	ND	
12. hexachloroethane	431	1	ND	ND	ND	
13. 1,1-dichloroethane	431	1	ND	ND	ND	
14. 1,1,2-trichloroethane	431	1	ND	ND	ND	

Table V-7 (Continued)

PRIMARY RARE EARTH METALS SAMPLING DATA
DRYER VENT CAUSTIC SCRUBBER
RAW WASTEWATER

Pollutant	Stream Code	Sample Type†	Concentrations (mg/l) Source	Day 1	Day 2	Day 3
Toxic Pollutants (Continued)						
15. 1,1,2,2-tetrachloroethane	431	1	ND	ND	ND	
16. chloroethane	431	1	ND	ND	ND	
17. bis(chloromethyl)ether	431	1	ND	ND	ND	
18. bis(2-chloroethyl)ether	431	1	ND	ND	ND	
19. 2-chloroethyl vinyl ether	431	1	ND	ND	ND	
20. 2-chloronaphthalene	431	1	ND	ND	ND	
21. 2,4,6-trichlorophenol	431	1	ND	0.001	ND	
22. p-chloro-m-cresol	431	1	ND	ND	ND	
23. chloroform	431	1	0.041	0.400	1.10	
24. 2-chlorophenol	431	1	ND	ND	ND	
25. 1,2-dichlorobenzene	431	1	ND	ND	ND	
26. 1,3-dichlorobenzene	431	1	ND	ND	ND	
27. 1,4-dichlorobenzene	431	1	ND	ND	ND	
28. 3,3'-dichlorobenzidine	431	1	ND	ND	ND	

Table V-7 (Continued)

PRIMARY RARE EARTH METALS SAMPLING DATA
DRYER VENT CAUSTIC SCRUBBER
RAW WASTEWATER

Pollutant	Stream Code	Sample Type†	Concentrations (mg/l) Source	Day 1	Day 2	Day 3
Toxic Pollutants (Continued)						
29. 1,1-dichloroethylene	431	1	ND	ND	ND	
30. 1,2-trans-dichloroethylene	431	1	ND	ND	ND	
31. 2,4-dichlorophenol	431	1	ND	ND	ND	
32. 1,2-dichloropropane	431	1	ND	ND	ND	
33. 1,3-dichloropropene	431	1	ND	ND	ND	
34. 2,4-dimethylphenol	431	1	ND	ND	ND	
35. 2,4-dinitrotoluene	431	1	ND	ND	ND	
36. 2,6-dinitrotoluene	431	1	ND	ND	ND	
37. 1,2-diphenylhydrazine	431	1	ND	ND	ND	
38. ethylbenzene	431	1	ND	ND	ND	
39. fluoranthene	431	1	ND	ND	ND	
40. 4-chlorophenyl phenyl ether	431	1	ND	ND	ND	
41. 4-bromophenyl phenyl ether	431	1	ND	ND	ND	
42. bis(2-chloroisopropyl)ether	431	1	ND	ND	ND	

Table V-7 (Continued)

PRIMARY RARE EARTH METALS SAMPLING DATA
DRYER VENT CAUSTIC SCRUBBER
RAW WASTEWATER

Pollutant	Stream Code	Sample Type†	Concentrations (mg/l) Source	Day 1	Day 2	Day 3
Toxic Pollutants (Continued)						
43. bis(2-choroethoxy)methane	431	1	ND	ND	ND	
44. methylene chloride	431	1	0.006	0.011	0.011	
45. methyl chloride (chloromethane)	431	1	ND	ND	ND	
46. methyl bromide (bromomethane)	431	1	ND	ND	ND	
47. bromoform (tribromomethane)	431	1	ND	0.006	ND	
48. dichlorobromomethane	431	1	ND	0.330	ND	
49. trichlorofluoromethane	431	1	ND	ND	ND	
50. dichlorodifluoromethane	431	1	ND	ND	ND	
51. chlorodibromomethane	431	1	ND	0.250	ND	
52. hexachlorobutadiene	431	1	ND	ND	ND	
53. hexachlorocyclopentadiene	431	1	ND	ND	ND	
54. isophorone	431	1	ND	ND	ND	
55. naphthalene	431	1	ND	ND	ND	
56. nitrobenzene	431	1	ND	ND	ND	

Table V-7 (Continued)

PRIMARY RARE EARTH METALS SAMPLING DATA
DRYER VENT CAUSTIC SCRUBBER
RAW WASTEWATER

Pollutant	Stream Code	Sample Type†	Concentrations (mg/l) Source	Day 1	Day 2	Day 3
Toxic Pollutants (Continued)						
57. 2-nitrophenol	431	1	ND	ND	ND	
58. 4-nitrophenol	431	1	ND	ND	ND	
59. 2,4-dinitrophenol	431	1	ND	ND	ND	
60. 4,6-dinitro-o-cresol	431	1	ND	ND	ND	
61. N-nitrosodimethylamine	431	1	ND	ND	ND	
62. N-nitrosodiphenylamine	431	1	ND	ND	ND	
63. N-nitrosodi-n-propylamine	431	1	ND	ND	ND	
64. pentachlorophenol	431	1	ND	ND	ND	
65. phenol	431	1	ND	ND	ND	
66. bis(2-ethylhexyl) phthalate	431	1	0.008	0.007	0.040	
67. butyl benzyl phthalate	431	1	0.007	ND	ND	
68. di-n-butyl phthalate	431	1	0.003	ND	ND	
69. di-n-octyl phthalate	431	1	0.006	ND	ND	
70. diethyl phthalate	431	1	ND	ND	ND	

Table V-7 (Continued)

PRIMARY RARE EARTH METALS SAMPLING DATA
DRYER VENT CAUSTIC SCRUBBER
RAW WASTEWATER

Pollutant	Stream Code	Sample Type†	Concentrations (mg/l) Source	Day 1	Day 2	Day 3
Toxic Pollutants (Continued)						
71. dimethyl phthalate	431	1	ND	ND	ND	
72. benzo(a)anthracene	431	1	ND	ND	ND	
73. benzo(a)pyrene	431	1	ND	ND	ND	
74. benzo(b)fluoranthene	431	1	ND	ND	ND	
75. benzo(k)fluoranthane	431	1	ND	ND	ND	
76. chrysene	431	1	ND	ND	ND	
77. acenaphthylene	431	1	ND	ND	ND	
78. anthracene (a)	431	1	ND	ND	ND	
79. benzo(ghi)perylene	431	1	ND	ND	ND	
80. fluorene	431	1	ND	ND	ND	
81. phenanthrene (a)	431	1	ND	ND	ND	
82. dibenzo(a,h)anthracene	431	1	ND	ND	ND	
83. indeno (1,2,3-c,d)pyrene	431	1	ND	ND	ND	
84. pyrene	431	1	ND	ND	ND	

Table V-7 (Continued)

PRIMARY RARE EARTH METALS SAMPLING DATA
DRYER VENT CAUSTIC SCRUBBER
RAW WASTEWATER

Pollutant	Stream Code	Sample Type†	Concentrations (mg/l) Source	Day 1	Day 2	Day 3
Toxic Pollutants (Continued)						
85. tetrachloroethylene	431	1	ND	ND	ND	
86. toluene	431	1	ND	ND	0.001	
87. trichloroethylene	431	1	ND	ND	ND	
88. vinyl chloride (chloroethylene)	431	1	ND	ND	ND	
89. aldrin	431	1	ND	ND	ND	
90. dieldrin	431	1	ND	ND	ND	
91. chlordane	431	1	ND	ND	ND	
92. 4,4'-DDT	431	1	ND	ND	ND	
93. 4,4'-DDE	431	1	ND	ND	ND	
94. 4,4'-DDD	431	1	ND	ND	ND	
95. alpha-endosulfan	431	1	ND	ND	ND	
96. beta-endosulfan	431	1	ND	ND	ND	
97. endosulfan sulfate	431	1	ND	ND	ND	
98. endrin	431	1	ND	ND	ND	

Table V-7 (Continued)

PRIMARY RARE EARTH METALS SAMPLING DATA
DRYER VENT CAUSTIC SCRUBBER
RAW WASTEWATER

Pollutant	Stream Code	Sample Type†	Concentrations (mg/l) Source	Day 1	Day 2	Day 3
Toxic Pollutants (Continued)						
99. endrin aldehyde	431	1	ND	ND	ND	
100. heptachlor	431	1	ND	ND	ND	
101. heptachlor epoxide	431	1	ND	ND	ND	
102. alpha-BHC	431	1	ND	ND	ND	
103. beta-BHC	431	1	ND	ND	ND	
104. gamma-BHC	431	1	ND	ND	ND	
105. delta-BHC	431	1	ND	ND	ND	
106. PCB-1242 (b)	431	1	ND	ND	ND	
107. PCB-1254 (b)	431	1	ND	ND	ND	
108. PCB-1221 (b)	431	1	ND	ND	ND	
109. PCB-1232 (c)	431	1	ND	ND	ND	
110. PCB-1248 (c)	431	1	ND	ND	ND	
111. PCB-1260 (c)	431	1	ND	ND	ND	
112. PCB-1016 (c)	431	1	ND	ND	ND	

Table V-7 (Continued)

PRIMARY RARE EARTH METALS SAMPLING DATA
DRYER VENT CAUSTIC SCRUBBER
RAW WASTEWATER

Pollutant	Stream Code	Sample Type†	Concentrations (mg/l) Source	Day 1	Day 2	Day 3
Toxic Pollutants (Continued)						
113. toxaphene	431	1	ND	ND	ND	
114. antimony	431	1	<0.005	<0.01	<0.02	
115. arsenic	431	1	0.160	0.056	0.096	
117. beryllium	431	1	<0.001	0.002	<0.001	
118. cadmium	431	1	<0.001	0.36	0.36	
119. chromium (total)	431	1	0.005	1.2	1.3	
120. copper	431	1	0.02	0.66	0.66	
121. cyanide (total)	431	1	0.002	0.026	0.020	
122. lead	431	1	<0.001	2.3	2.2	
123. mercury	431	1	<0.0002	0.0028	0.0042	
124. nickel	431	1	0.001	3.1	0.190	
125. selenium	431	1	<0.005	0.22	0.510	
126. silver	431	1	<0.001	0.44	0.50	
127. thallium	431	1	<0.001	1.4	1.4	

Table V-7 (Continued)

PRIMARY RARE EARTH METALS SAMPLING DATA
DRYER VENT CAUSTIC SCRUBBER
RAW WASTEWATER

Pollutant	Stream Code	Sample Type†	Concentrations (mg/l) Source	Day 1	Day 2	Day 3
Toxic Pollutants (Continued)						
128. zinc	431	1	0.02	0.56	0.56	
Nonconventional Pollutants						
Chloride	431		18	12,000	15,000	
Iron	431		0.16	16	14	
Phenolics	431	1	0.31	0.009	0.026	
Total Dissolved Solids (TDS)	431		85	1,100	220,000	
Conventional Pollutants						
Oil and Grease	431	1	<1	5.6	<1	
Total Suspended Solids (TSS)	431				970	
pH (standard units)	431		7.9	11.8	9.8	

†Sample Type Code: 1 - One-time grab

(a),(b),(c) Reported together

Table V-8

PRIMARY RARE EARTH METALS SAMPLING DATA
ELECTROLYTIC CELL WATER QUENCH
RAW WASTEWATER

Pollutant	Stream Code	Sample Type†	Concentrations (mg/l) Source	Day 1	Day 2	Day 3
Toxic Pollutants						
1. acenaphthene	430	5	ND	ND	ND	ND
2. acrolein	430	1	ND	ND	ND	ND
3. acrylonitrile	430	1	ND	ND	ND	ND
4. benzene	430	1	0.009	0.016	0.014	0.013
5. benzidine	430	5	ND	ND	ND	ND
6. carbon tetrachloride	430	1	ND	0.040	0.082	0.046
7. chlorobenzene	430	1	ND	ND	ND	ND
8. 1,2,4-trichlorobenzene	430	5	ND	ND	ND	ND
9. hexachlorobenzene	430	5	ND	1.90	2.00	2.00
10. 1,2-dichloroethane	430	1	ND	ND	ND	ND
11. 1,1,1-trichloroethane	430	1	ND	ND	ND	ND
12. hexachloroethane	430	5	ND	ND	ND	ND
13. 1,1-dichloroethane	430	1	ND	ND	ND	ND
14. 1,1,2-trichloroethane	430	1	ND	ND	ND	ND

Table V-8 (Continued)

PRIMARY RARE EARTH METALS SAMPLING DATA
ELECTROLYTIC CELL WATER QUENCH
RAW WASTEWATER

Pollutant	Stream Code	Sample Type†	Concentrations (mg/l) Source	Day 1	Day 2	Day 3
Toxic Pollutants (Continued)						
15. 1,1,2,2-tetrachloroethane	430	1	ND	ND	ND	ND
16. chloroethane	430	1	ND	ND	ND	ND
17. bis(chloromethyl)ether	430	1	ND	ND	ND	ND
18. bis(2-chloroethyl)ether	430	5	ND	ND	ND	ND
19. 2-chloroethyl vinyl ether	430	1	ND	ND	ND	ND
20. 2-chloronaphthalene	430	5	ND	ND	ND	ND
21. 2,4,6-trichlorophenol	430	5	ND	ND	ND	ND
22. p-chloro-m-cresol	430	5	ND	ND	ND	ND
23. chloroform	430	1	0.041	0.009	0.041	0.053
24. 2-chlorophenol	430	5	ND	ND	ND	ND
25. 1,2-dichlorobenzene	430	5	ND	ND	ND	ND
26. 1,3-dichlorobenzene	430	5	ND	ND	ND	ND
27. 1,4-dichlorobenzene	430	5	ND	ND	ND	ND
28. 3,3'-dichlorobenzidine	430	5	ND	ND	ND	ND

Table V-8 (Continued)

PRIMARY RARE EARTH METALS SAMPLING DATA
ELECTROLYTIC CELL WATER QUENCH
RAW WASTEWATER

Pollutant	Stream Code	Sample Type†	Concentrations (mg/l) Source	Day 1	Day 2	Day 3
Toxic Pollutants (Continued)						
29. 1,1-dichloroethylene	430	1	ND	ND	ND	ND
30. 1,2-trans-dichloroethylene	430	1	ND	ND	ND	ND
31. 2,4-dichlorophenol	430	5	ND	ND	ND	ND
32. 1,2-dichloropropane	430	1	ND	ND	ND	ND
33. 1,3-dichloropropene	430	1	ND	ND	ND	ND
34. 2,4-dimethylphenol	430	5	ND	ND	ND	ND
35. 2,4-dinitrotoluene	430	5	ND	ND	ND	ND
36. 2,6-dinitrotoluene	430	5	ND	ND	ND	ND
37. 1,2-diphenylhydrazine	430	5	ND	ND	ND	ND
38. ethylbenzene	430	1	ND	ND	ND	ND
39. fluoranthene	430	5	ND	ND	ND	ND
40. 4-chlorophenyl phenyl ether	430	5	ND	ND	ND	ND
41. 4-bromophenyl phenyl ether	430	5	ND	ND	ND	ND
42. bis(2-chloroisopropyl)ether	430	5	ND	ND	ND	ND

Table V-8 (Continued)

PRIMARY RARE EARTH METALS SAMPLING DATA
ELECTROLYTIC CELL WATER QUENCH
RAW WASTEWATER

Pollutant	Stream Code	Sample Type†	Concentrations (mg/l) Source	Day 1	Day 2	Day 3
Toxic Pollutants (Continued)						
43. bis(2-choroethoxy)methane	430	5	ND	ND	ND	ND
44. methylene chloride	430	1	0.006	0.010	0.012	0.015
45. methyl chloride (chloromethane)	430	1	ND	ND	ND	ND
46. methyl bromide (bromomethane)	430	1	ND	ND	ND	ND
47. bromoform (tribromomethane)	430	1	ND	ND	ND	ND
48. dichlorobromomethane	430	1	ND	ND	ND	ND
49. trichlorofluoromethane	430	1	ND	ND	0.021	0.012
50. dichlorodifluoromethane	430	1	ND	ND	ND	ND
51. chlorodibromomethane	430	1	ND	ND	ND	ND
52. hexachlorobutadiene	430	5	ND	ND	ND	ND
53. hexachlorocyclopentadiene	430	5	ND	ND	ND	ND
54. isophorone	430	5	ND	ND	ND	ND
55. naphthalene	430	5	ND	ND	ND	ND
56. nitrobenzene	430	5	ND	ND	ND	ND

Table V-8 (Continued)

PRIMARY RARE EARTH METALS SAMPLING DATA
ELECTROLYTIC CELL WATER QUENCH
RAW WASTEWATER

Pollutant	Stream Code	Sample Type†	Concentrations (mg/l) Source	Day 1	Day 2	Day 3
Toxic Pollutants (Continued)						
57. 2-nitrophenol	430	5	ND	ND	ND	ND
58. 4-nitrophenol	430	5	ND	ND	ND	ND
59. 2,4-dinitrophenol	430	5	ND	ND	ND	ND
60. 4,6-dinitro-o-cresol	430	5	ND	ND	ND	ND
61. N-nitrosodimethylamine	430	5	ND	ND	ND	ND
62. N-nitrosodiphenylamine	430	5	ND	ND	ND	ND
63. N-nitrosodi-n-propylamine	430	5	ND	ND	ND	ND
64. pentachlorophenol	430	5	ND	ND	ND	ND
65. phenol	430	5	ND	ND	ND	ND
66. bis(2-ethylhexyl) phthalate	430	5	0.008	0.003	0.013	0.003
67. butyl benzyl phthalate	430	5	0.007	ND	ND	ND
68. di-n-butyl phthalate	430	5	0.003	ND	ND	ND
69. di-n-octyl phthalate	430	5	0.006	ND	ND	ND
70. diethyl phthalate	430	5	ND	ND	ND	ND

Table V-8 (Continued)

PRIMARY RARE EARTH METALS SAMPLING DATA
ELECTROLYTIC CELL WATER QUENCH
RAW WASTEWATER

Pollutant	Stream Code	Sample Type†	Concentrations (mg/l) Source	Day 1	Day 2	Day 3
Toxic Pollutants (Continued)						
71. dimethyl phthalate	430	5	ND	ND	ND	ND
72. benzo(a)anthracene	430	5	ND	ND	ND	ND
73. benzo(a)pyrene	430	5	ND	ND	ND	ND
74. benzo(b)fluoranthene	430	5	ND	ND	ND	ND
75. benzo(k)fluoranthane	430	5	ND	ND	ND	ND
76. chrysene	430	5	ND	ND	ND	ND
77. acenaphthylene	430	5	ND	ND	ND	ND
78. anthracene (a)	430	5	ND	ND	ND	ND
79. benzo(ghi)perylene	430	5	ND	ND	ND	ND
80. fluorene	430	5	ND	ND	ND	ND
81. phenanthrene (a)	430	5	ND	ND	ND	ND
82. dibenzo(a,h)anthracene	430	5	ND	ND	ND	ND
83. indeno (1,2,3-c,d)pyrene	430	5	ND	ND	ND	ND
84. pyrene	430	5	ND	ND	ND	ND

Table V-8 (Continued)

PRIMARY RARE EARTH METALS SAMPLING DATA
ELECTROLYTIC CELL WATER QUENCH
RAW WASTEWATER

Pollutant	Stream Code	Sample Type†	Concentrations (mg/l) Source	Day 1	Day 2	Day 3
Toxic Pollutants (Continued)						
85. tetrachloroethylene	430	1	ND	ND	ND	ND
86. toluene	430	1	ND	ND	ND	ND
87. trichloroethylene	430	1	ND	ND	ND	ND
88. vinyl chloride (chloroethylene)	430	1	ND	ND	ND	ND
89. aldrin	430	5	ND	ND	ND	ND
90. dieldrin	430	5	ND	ND	ND	ND
91. chlordane	430	5	ND	ND	ND	ND
92. 4,4'-DDT	430	5	ND	ND	ND	ND
93. 4,4'-DDE	430	5	ND	ND	ND	ND
94. 4,4'-DDD	430	5	ND	ND	ND	ND
95. alpha-endosulfan	430	5	ND	ND	ND	ND
96. beta-endosulfan	430	5	ND	ND	ND	ND
97. endosulfan sulfate	430	5	ND	ND	ND	ND
98. endrin	430	5	ND	ND	ND	ND

Table V-8 (Continued)

PRIMARY RARE EARTH METALS SAMPLING DATA
ELECTROLYTIC CELL WATER QUENCH
RAW WASTEWATER

Pollutant	Stream Code	Sample Type†	Concentrations (mg/l) Source	Day 1	Day 2	Day 3
Toxic Pollutants (Continued)						
99. endrin aldehyde	430	5	ND	ND	ND	ND
100. heptachlor	430	5	ND	ND	ND	ND
101. heptachlor epoxide	430	5	ND	ND	ND	ND
102. alpha-BHC	430	5	ND	ND	ND	ND
103. beta-BHC	430	5	ND	ND	ND	ND
104. gamma-BHC	430	5	ND	ND	ND	ND
105. delta-BHC	430	5	ND	ND	ND	ND
106. PCB-1242 (b)	430	5	ND	ND	ND	ND
107. PCB-1254 (b)	430	5	ND	ND	ND	ND
108. PCB-1221 (b)	430	5	ND	ND	ND	ND
109. PCB-1232 (c)	430	5	ND	ND	ND	ND
110. PCB-1248 (c)	430	5	ND	ND	ND	ND
111. PCB-1260 (c)	430	5	ND	ND	ND	ND
112. PCB-1016 (c)	430	5	ND	ND	ND	ND

Table V-8 (Continued)

PRIMARY RARE EARTH METALS SAMPLING DATA
ELECTROLYTIC CELL WATER QUENCH
RAW WASTEWATER

Pollutant	Stream Code	Sample Type†	Concentrations (mg/l) Source	Day 1	Day 2	Day 3
Toxic Pollutants (Continued)						
113. toxaphene	430	5	ND	ND	ND	ND
114. antimony	430	5	<0.005	<0.005	<0.005	0.010
115. arsenic	430	5	0.160	0.022	0.006	0.025
117. beryllium	430	5	<0.001	<0.001	<0.001	<0.001
118. cadmium	430	5	<0.001	0.02	<0.001	0.001
119. chromium (total)	430	5	0.005	<0.001	0.018	0.033
120. copper	430	5	0.02	0.033	0.010	0.026
121. cyanide (total)	430	1	0.002	0.0003	0.0003	0.022
122. lead	430	5	<0.001	0.140	0.400	0.28
123. mercury	430	5	<0.0002	0.0002	<0.0002	0.002
124. nickel	430	5	0.001	0.050	0.013	0.051
125. selenium	430	5	<0.005	<0.005	<0.005	0.023
126. silver	430	5	<0.001	<0.001	<0.001	<0.001
127. thallium	430	5	<0.001	<0.001	<0.001	0.015

Table V-8 (Continued)

PRIMARY RARE EARTH METALS SAMPLING DATA
ELECTROLYTIC CELL WATER QUENCH
RAW WASTEWATER

Pollutant	Stream Code	Sample Type†	Concentrations (mg/l) Source	Day 1	Day 2	Day 3
Toxic Pollutants (Continued)						
128. zinc	430	5	0.02	0.19	0.06	0.10
Nonconventional Pollutants						
Iron	430	5	0.16	20	14	12
Phenolics	430	1	0.31	0.009	0.007	0.014
Total Dissolved Solids (TDS)	430	5	85	220	250	290
Conventional Pollutants						
Oil and Grease	430	1	<1	<1	6.8	1.8
Total Suspended Solids (TSS)	430	5		48	25	25
pH (standard units)	430	5	7.9	1.6	1.3	1.3

†Sample Type Code: 1 - One-time grab
5 - 24-hour manual composite

(a),(b),(c) Reported together

Table V-9

PRIMARY RARE EARTH METALS SAMPLING DATA
COMBINED RAW WASTEWATER

Pollutant	Stream Code	Sample Type†	Concentrations (mg/l) Source	Day 1	Day 2	Day 3
Toxic Pollutants						
1. acenaphthene	432	5	ND	ND	ND	ND
2. acrolein	432	1	ND	ND	ND	ND
3. acrylonitrile	432	1	ND	ND	ND	ND
4. benzene	432	1	0.009	0.010	ND	0.012
5. benzidine	432	5	ND	ND	ND	ND
6. carbon tetrachloride	432	1	ND	0.013	ND	ND
7. chlorobenzene	432	1	ND	ND	ND	0.007
8. 1,2,4-trichlorobenzene	432	5	ND	ND	ND	ND
9. hexachlorobenzene	432	5	ND	1.60	2.60	1.30
10. 1,2-dichloroethane	432	1	ND	ND	ND	ND
11. 1,1,1-trichloroethane	432	1	ND	ND	ND	ND
12. hexachloroethane	432	5	ND	ND	ND	ND
13. 1,1-dichloroethane	432	1	ND	ND	ND	ND
14. 1,1,2-trichloroethane	432	1	ND	ND	ND	ND

Table V-9 (Continued)

PRIMARY RARE EARTH METALS SAMPLING DATA
COMBINED RAW WASTEWATER

Pollutant	Stream Code	Sample Type†	Concentrations (mg/l) Source	Day 1	Day 2	Day 3
Toxic Pollutants (Continued)						
15. 1,1,2,2-tetrachloroethane	432	1	ND	ND	ND	ND
16. chloroethane	432	1	ND	ND	ND	ND
17. bis(chloromethyl)ether	432	1	ND	ND	ND	ND
18. bis(2-chloroethyl)ether	432	5	ND	ND	ND	ND
19. 2-chloroethyl vinyl ether	432	1	ND	ND	ND	ND
20. 2-chloronaphthalene	432	5	ND	ND	ND	ND
21. 2,4,6-trichlorophenol	432	5	ND	ND	ND	ND
22. p-chloro-m-cresol	432	5	ND	ND	ND	ND
23. chloroform	432	1	0.041	0.054	ND	0.025
24. 2-chlorophenol	432	5	ND	ND	ND	ND
25. 1,2-dichlorobenzene	432	5	ND	ND	ND	ND
26. 1,3-dichlorobenzene	432	5	ND	ND	ND	ND
27. 1,4-dichlorobenzene	432	5	ND	ND	ND	ND
28. 3,3'-dichlorobenzidine	432	5	ND	ND	ND	ND

Table V-9 (Continued)

PRIMARY RARE EARTH METALS SAMPLING DATA
COMBINED RAW WASTEWATER

Pollutant	Stream Code	Sample Type†	Concentrations (mg/l) Source	Day 1	Day 2	Day 3
Toxic Pollutants (Continued)						
29. 1,1-dichloroethylene	432	1	ND	ND	ND	ND
30. 1,2-trans-dichloroethylene	432	1	ND	ND	ND	ND
31. 2,4-dichlorophenol	432	5	ND	ND	ND	ND
32. 1,2-dichloropropane	432	1	ND	ND	ND	ND
33. 1,3-dichloropropene	432	1	ND	ND	ND	ND
34. 2,4-dimethylphenol	432	5	ND	ND	ND	ND
35. 2,4-dinitrotoluene	432	5	ND	ND	ND	ND
36. 2,6-dinitrotoluene	432	5	ND	ND	ND	ND
37. 1,2-diphenylhydrazine	432	5	ND	ND	ND	ND
38. ethylbenzene	432	1	ND	ND	ND	ND
39. fluoranthene	432	5	ND	ND	ND	ND
40. 4-chlorophenyl phenyl ether	432	5	ND	ND	ND	ND
41. 4-bromophenyl phenyl ether	432	5	ND	ND	ND	ND
42. bis(2-chloroisopropyl)ether	432	5	ND	ND	ND	ND

Table V-9 (Continued)

PRIMARY RARE EARTH METALS SAMPLING DATA
COMBINED RAW WASTEWATER

Pollutant	Stream Code	Sample Type†	Concentrations (mg/l) Source	Day 1	Day 2	Day 3
Toxic Pollutants (Continued)						
43. bis(2-choroethoxy)methane	432	5	ND	ND	ND	ND
44. methylene chloride	432	1	0.006	0.010	ND	0.019
45. methyl chloride (chloromethane)	432	1	ND	ND	ND	ND
46. methyl bromide (bromomethane)	432	1	ND	ND	ND	ND
47. bromoform (tribromomethane)	432	1	ND	ND	ND	ND
48. dichlorobromomethane	432	1	ND	ND	ND	ND
49. trichlorofluoromethane	432	1	ND	ND	ND	ND
50. dichlorodifluoromethane	432	1	ND	ND	ND	ND
51. chlorodibromomethane	432	1	ND	0.002	ND	ND
52. hexachlorobutadiene	432	5	ND	ND	ND	ND
53. hexachlorocyclopentadiene	432	5	ND	ND	ND	ND
54. isophorone	432	5	ND	ND	ND	ND
55. naphthalene	432	5	ND	ND	ND	ND
56. nitrobenzene	432	5	ND	ND	ND	ND

Table V-9 (Continued)

PRIMARY RARE EARTH METALS SAMPLING DATA
COMBINED RAW WASTEWATER

Pollutant	Stream Code	Sample Type†	Concentrations (mg/l) Source	Day 1	Day 2	Day 3
Toxic Pollutants (Continued)						
57. 2-nitrophenol	432	5	ND	ND	ND	ND
58. 4-nitrophenol	432	5	ND	ND	ND	ND
59. 2,4-dinitrophenol	432	5	ND	ND	ND	ND
60. 4,6-dinitro-o-cresol	432	5	ND	ND	ND	ND
61. N-nitrosodimethylamine	432	5	ND	ND	ND	ND
62. N-nitrosodiphenylamine	432	5	ND	ND	ND	ND
63. N-nitrosodi-n-propylamine	432	5	ND	ND	ND	ND
64. pentachlorophenol	432	5	ND	ND	ND	ND
65. phenol	432	5	ND	0.001	ND	ND
66. bis(2-ethylhexyl) phthalate	432	5	0.008	0.002	0.019	0.004
67. butyl benzyl phthalate	432	5	0.007	ND	ND	ND
68. di-n-butyl phthalate	432	5	0.003	ND	ND	ND
69. di-n-octyl phthalate	432	5	0.006	ND	ND	ND
70. diethyl phthalate	432	5	ND	ND	ND	ND

Table V-9 (Continued)

PRIMARY RARE EARTH METALS SAMPLING DATA
COMBINED RAW WASTEWATER

Pollutant	Stream Code	Sample Type†	Concentrations (mg/l) Source	Day 1	Day 2	Day 3
Toxic Pollutants (Continued)						
71. dimethyl phthalate	432	5	ND	ND	ND	ND
72. benzo(a)anthracene	432	5	ND	ND	ND	ND
73. benzo(a)pyrene	432	5	ND	ND	ND	ND
74. benzo(b)fluoranthene	432	5	ND	ND	ND	ND
75. benzo(k)fluoranthane	432	5	ND	ND	ND	ND
76. chrysene	432	5	ND	ND	ND	ND
77. acenaphthylene	432	5	ND	ND	ND	ND
78. anthracene (a)	432	5	ND	ND	ND	ND
79. benzo(ghi)perylene	432	5	ND	ND	ND	ND
80. fluorene	432	5	ND	ND	ND	ND
81. phenanthrene (a)	432	5	ND	ND	ND	ND
82. dibenzo(a,h)anthracene	432	5	ND	ND	ND	ND
83. indeno (1,2,3-c,d)pyrene	432	5	ND	ND	ND	ND
84. pyrene	432	5	ND	ND	ND	ND

Table V-9 (Continued)

PRIMARY RARE EARTH METALS SAMPLING DATA
COMBINED RAW WASTEWATER

Pollutant	Stream Code	Sample Type†	Concentrations (mg/l) Source	Day 1	Day 2	Day 3
Toxic Pollutants (Continued)						
85. tetrachloroethylene	432	1	ND	ND	ND	ND
86. toluene	432	1	ND	ND	ND	ND
87. trichloroethylene	432	1	ND	ND	ND	ND
88. vinyl chloride (chloroethylene)	432	1	ND	ND	ND	ND
89. aldrin	432	5	ND	ND	ND	ND
90. dieldrin	432	5	ND	ND	ND	ND
91. chlordane	432	5	ND	ND	ND	ND
92. 4,4'-DDT	432	5	ND	ND	ND	ND
93. 4,4'-DDE	432	5	ND	ND	ND	ND
94. 4,4'-DDD	432	5	ND	ND	ND	ND
95. alpha-endosulfan	432	5	ND	ND	ND	ND
96. beta-endosulfan	432	5	ND	ND	ND	ND
97. endosulfan sulfate	432	5	ND	ND	ND	ND
98. endrin	432	5	ND	ND	ND	ND

Table V-9 (Continued)

PRIMARY RARE EARTH METALS SAMPLING DATA
COMBINED RAW WASTEWATER

Pollutant	Stream Code	Sample Type†	Concentrations (mg/l) Source	Day 1	Day 2	Day 3
Toxic Pollutants (Continued)						
99. endrin aldehyde	432	5	ND	ND	ND	ND
100. heptachlor	432	5	ND	ND	ND	ND
101. heptachlor epoxide	432	5	ND	ND	ND	ND
102. alpha-BHC	432	5	ND	ND	ND	ND
103. beta-BHC	432	5	ND	ND	ND	ND
104. gamma-BHC	432	5	ND	ND	ND	ND
105. delta-BHC	432	5	ND	ND	ND	ND
106. PCB-1242 (b)	432	5	ND	ND	ND	ND
107. PCB-1254 (b)	432	5	ND	ND	ND	ND
108. PCB-1221 (b)	432	5	ND	ND	ND	ND
109. PCB-1232 (c)	432	5	ND	ND	ND	ND
110. PCB-1248 (c)	432	5	ND	ND	ND	ND
111. PCB-1260 (c)	432	5	ND	ND	ND	ND
112. PCB-1016 (c)	432	5	ND	ND	ND	ND

Table V-9 (Continued)

PRIMARY RARE EARTH METALS SAMPLING DATA
COMBINED RAW WASTEWATER

Pollutant	Stream Code	Sample Type†	Concentrations (mg/l) Source	Day 1	Day 2	Day 3
Toxic Pollutants (Continued)						
113. toxaphene	432	5	ND	ND	ND	ND
114. antimony	432	5	<0.005	<0.005	<0.005	<0.01
115. arsenic	432	5	0.160	<0.005	<0.005	1.45
117. beryllium	432	5	<0.001	<0.001	<0.001	<0.001
118. cadmium	432	5	<0.001	0.03	0.002	0.007
119. chromium (total)	432	5	0.005	0.006	0.010	<0.001
120. copper	432	5	0.02	0.23	0.019	0.013
121. cyanide (total)	432	1	0.002	0.0022	0.0082	0.0082
122. lead	432	5	<0.001	0.09	0.29	0.14
123. mercury	432	5	<0.0002	<0.0002	0.0007	0.0002
124. nickel	432	5	0.001	0.052	0.020	0.030
125. selenium	432	5	<0.005	<0.005	0.028	0.034
126. silver	432	5	<0.001	<0.001	<0.001	<0.001
127. thallium	432	5	<0.001	0.003	0.006	<0.001

Table V-9 (Continued)

PRIMARY RARE EARTH METALS SAMPLING DATA
COMBINED RAW WASTEWATER

Pollutant	Stream Code	Sample Type†	Concentrations (mg/l) Source	Day 1	Day 2	Day 3
Toxic Pollutants (Continued)						
128. zinc	432	5	0.02	0.05	0.03	0.04
Nonconventional Pollutants						
Chloride	432	5	18	2,100	1,800	2,700
Iron	432	5	0.16	8.4	7.9	6.8
Phenolics	432	1	0.031	0.006	0.007	0.012
Conventional Pollutants						
Oil and Grease	432	1	<1	<1	4.1	4.7
Total Suspended Solids (TSS)	432	5		20	21	27
pH (standard units)	432	5	7.9	1.6	1.3	1.3

†Sample Type Code: 1 - One-time grab
5 - 24-hour manual composite

(a),(b),(c) Reported together

Table V-10

PRIMARY RARE EARTH METALS SAMPLING DATA
FINAL EFFLUENT

Pollutant	Stream Code	Sample Type†	Concentrations (mg/l) Source	Day 1	Day 2	Day 3
Toxic Pollutants						
1. acenaphthene	427	6	ND	ND	ND	ND
2. acrolein	427	1	ND	ND	ND	ND
3. acrylonitrile	427	1	ND	ND	ND	ND
4. benzene	427	1	0.009	0.014	0.012	0.013
5. benzidine	427	6	ND	ND	ND	ND
6. carbon tetrachloride	427	1	ND	ND	0.006	0.003
7. chlorobenzene	427	1	ND	ND	ND	ND
8. 1,2,4-trichlorobenzene	427	6	ND	ND	ND	ND
9. hexachlorobenzene	427	6	ND	2.10	1.30	0.310
10. 1,2-dichloroethane	427	1	ND	ND	ND	ND
11. 1,1,1-trichloroethane	427	1	ND	ND	ND	ND
12. hexachloroethane	427	6	ND	ND	ND	ND
13. 1,1-dichloroethane	427	1	ND	ND	ND	ND
14. 1,1,2-trichloroethane	427	1	ND	ND	ND	ND

Table V-10 (Continued)

PRIMARY RARE EARTH METALS SAMPLING DATA
FINAL EFFLUENT

Pollutant	Stream Code	Sample Type†	Concentrations (mg/l) Source	Day 1	Day 2	Day 3
Toxic Pollutants (Continued)						
15. 1,1,2,2-tetrachloroethane	427	1	ND	ND	ND	ND
16. chloroethane	427	1	ND	ND	ND	ND
17. bis(chloromethyl)ether	427	1	ND	ND	ND	ND
18. bis(2-chloroethyl)ether	427	6	ND	ND	ND	ND
19. 2-chloroethyl vinyl ether	427	1	ND	ND	ND	ND
20. 2-chloronaphthalene	427	6	ND	ND	ND	ND
21. 2,4,6-trichlorophenol	427	6	ND	ND	ND	ND
22. p-chloro-m-cresol	427	6	ND	ND	ND	ND
23. chloroform	427	1	0.041	0.230	0.160	0.220
24. 2-chlorophenol	427	6	ND	ND	ND	ND
25. 1,2-dichlorobenzene	427	6	ND	ND	ND	ND
26. 1,3-dichlorobenzene	427	6	ND	ND	ND	ND
27. 1,4-dichlorobenzene	427	6	ND	ND	ND	ND
28. 3,3'-dichlorobenzidine	427	6	ND	ND	ND	ND

Table V-10 (Continued)

PRIMARY RARE EARTH METALS SAMPLING DATA
FINAL EFFLUENT

Pollutant	Stream Code	Sample Type†	Concentrations (mg/l) Source	Day 1	Day 2	Day 3
Toxic Pollutants (Continued)						
29. 1,1-dichloroethylene	427	1	ND	ND	ND	ND
30. 1,2-trans-dichloroethylene	427	1	ND	ND	ND	ND
31. 2,4-dichlorophenol	427	6	ND	ND	ND	ND
32. 1,2-dichloropropane	427	1	ND	ND	ND	ND
33. 1,3-dichloropropene	427	1	ND	ND	ND	ND
34. 2,4-dimethylphenol	427	6	ND	ND	ND	ND
35. 2,4-dinitrotoluene	427	6	ND	ND	ND	ND
36. 2,6-dinitrotoluene	427	6	ND	ND	ND	ND
37. 1,2-diphenylhydrazine	427	6	ND	ND	ND	ND
38. ethylbenzene	427	1	ND	ND	ND	ND
39. fluoranthene	427	6	ND	ND	ND	ND
40. 4-chlorophenyl phenyl ether	427	6	ND	ND	ND	ND
41. 4-bromophenyl phenyl ether	427	6	ND	ND	ND	ND
42. bis(2-chloroisopropyl)ether	427	6	ND	ND	ND	ND

Table V-10 (Continued)

PRIMARY RARE EARTH METALS SAMPLING DATA
FINAL EFFLUENT

Pollutant	Stream Code	Sample Type†	Concentrations (mg/l) Source	Day 1	Day 2	Day 3
Toxic Pollutants (Continued)						
43. bis(2-choroethoxy)methane	427	6	ND	ND	ND	ND
44. methylene chloride	427	1	0.006	0.013	0.017	0.013
45. methyl chloride (chloromethane)	427	1	ND	ND	ND	ND
46. methyl bromide (bromomethane)	427	1	ND	ND	ND	ND
47. bromoform (tribromomethane)	427	1	ND	0.006	0.009	0.006
48. dichlorobromomethane	427	1	ND	0.130	0.100	0.120
49. trichlorofluoromethane	427	1	ND	ND	ND	ND
50. dichlorodifluoromethane	427	1	ND	ND	ND	ND
51. chlorodibromomethane	427	1	ND	0.046	0.052	0.046
52. hexachlorobutadiene	427	6	ND	ND	ND	ND
53. hexachlorocyclopentadiene	427	6	ND	ND	ND	ND
54. isophorone	427	6	ND	ND	ND	ND
55. naphthalene	427	6	ND	ND	ND	ND
56. nitrobenzene	427	6	ND	ND	ND	ND

Table V-10 (Continued)

PRIMARY RARE EARTH METALS SAMPLING DATA
FINAL EFFLUENT

Pollutant	Stream Code	Sample Type†	Concentrations (mg/l) Source	Day 1	Day 2	Day 3
Toxic Pollutants (Continued)						
57. 2-nitrophenol	427	6	ND	ND	ND	ND
58. 4-nitrophenol	427	6	ND	ND	ND	ND
59. 2,4-dinitrophenol	427	6	ND	ND	ND	ND
60. 4,6-dinitro-o-cresol	427	6	ND	ND	ND	ND
61. N-nitrosodimethylamine	427	6	ND	ND	ND	ND
62. N-nitrosodiphenylamine	427	6	ND	ND	ND	ND
63. N-nitrosodi-n-propylamine	427	6	ND	ND	ND	ND
64. pentachlorophenol	427	6	ND	ND	ND	ND
65. phenol	427	6	ND	ND	ND	ND
66. bis(2-ethylhexyl) phthalate	427	6	0.008	0.005	0.004	ND
67. butyl benzyl phthalate	427	6	0.007	ND	ND	ND
68. di-n-butyl phthalate	427	6	0.003	ND	ND	ND
69. di-n-octyl phthalate	427	6	0.006	ND	ND	ND
70. diethyl phthalate	427	6	ND	ND	ND	ND

Table V-10 (Continued)

PRIMARY RARE EARTH METALS SAMPLING DATA
FINAL EFFLUENT

Pollutant	Stream Code	Sample Type†	Concentrations (mg/l) Source	Day 1	Day 2	Day 3
Toxic Pollutants (Continued)						
71. dimethyl phthalate	427	6	ND	ND	ND	ND
72. benzo(a)anthracene	427	6	ND	ND	ND	ND
73. benzo(a)pyrene	427	6	ND	ND	ND	ND
74. benzo(b)fluoranthene	427	6	ND	ND	ND	ND
75. benzo(k)fluoranthane	427	6	ND	ND	ND	ND
76. chrysene	427	6	ND	ND	ND	ND
77. acenaphthylene	427	6	ND	ND	ND	ND
78. anthracene (a)	427	6	ND	ND	ND	ND
79. benzo(ghi)perylene	427	6	ND	ND	ND	ND
80. fluorene	427	6	ND	ND	ND	ND
81. phenanthrene (a)	427	6	ND	ND	ND	ND
82. dibenzo(a,h)anthracene	427	6	ND	ND	ND	ND
83. indeno (1,2,3-c,d)pyrene	427	6	ND	ND	ND	ND
84. pyrene	427	6	ND	ND	ND	ND

Table V-10 (Continued)

PRIMARY RARE EARTH METALS SAMPLING DATA
FINAL EFFLUENT

Pollutant	Stream Code	Sample Type†	Concentrations (mg/l) Source	Day 1	Day 2	Day 3
Toxic Pollutants (Continued)						
85. tetrachloroethylene	427	1	ND	ND	ND	ND
86. toluene	427	1	ND	ND	ND	ND
87. trichloroethylene	427	1	ND	ND	ND	ND
88. vinyl chloride (chloroethylene)	427	1	ND	ND	ND	ND
89. aldrin	427	6	ND	ND	ND	ND
90. dieldrin	427	6	ND	ND	ND	ND
91. chlordane	427	6	ND	ND	ND	ND
92. 4,4'-DDT	427	6	ND	ND	ND	ND
93. 4,4'-DDE	427	6	ND	ND	ND	ND
94. 4,4'-DDD	427	6	ND	ND	ND	ND
95. alpha-endosulfan	427	6	ND	ND	ND	ND
96. beta-endosulfan	427	6	ND	ND	ND	ND
97. endosulfan sulfate	427	6	ND	ND	ND	ND
98. endrin	427	6	ND	ND	ND	ND

Table V-10 (Continued)

PRIMARY RARE EARTH METALS SAMPLING DATA
FINAL EFFLUENT

Pollutant	Stream Code	Sample Type†	Concentrations (mg/l) Source	Day 1	Day 2	Day 3
Toxic Pollutants (Continued)						
99. endrin aldehyde	427	6	ND	ND	ND	ND
100. heptachlor	427	6	ND	ND	ND	ND
101. heptachlor epoxide	427	6	ND	ND	ND	ND
102. alpha-BHC	427	6	ND	ND	ND	ND
103. beta-BHC	427	6	ND	ND	ND	ND
104. gamma-BHC	427	6	ND	ND	ND	ND
105. delta-BHC	427	6	ND	ND	ND	ND
106. PCB-1242 (b)	427	6	ND	ND	ND	ND
107. PCB-1254 (b)	427	6	ND	ND	ND	ND
108. PCB-1221 (b)	427	6	ND	ND	ND	ND
109. PCB-1232 (c)	427	6	ND	ND	ND	ND
110. PCB-1248 (c)	427	6	ND	ND	ND	ND
111. PCB-1260 (c)	427	6	ND	ND	ND	ND
112. PCB-1016 (c)	427	6	ND	ND	ND	ND

Table V-10 (Continued)

PRIMARY RARE EARTH METALS SAMPLING DATA
FINAL EFFLUENT

Pollutant	Stream Code	Sample Type†	Concentrations (mg/l) Source	Day 1	Day 2	Day 3
Toxic Pollutants (Continued)						
113. toxaphene	427	6	ND	ND	ND	ND
114. antimony	427	6	<0.005	<0.01	<0.01	<0.01
115. arsenic	427	6	0.160	0.018	0.014	0.011
117. beryllium	427	6	<0.001	<0.001	<0.001	<0.001
118. cadmium	427	6	<0.001	0.001	0.002	<0.001
119. chromium (total)	427	6	0.005	0.001	0.018	0.001
120. copper	427	6	0.02	0.032	0.019	0.030
121. cyanide (total)	427	1	0.002	0.0022	0.0022	0.0022
122. lead	427	6	<0.001	0.110	0.110	0.150
123. mercury	427	6	<0.0002	<0.0002	<0.0002	0.0007
124. nickel	427	6	0.001	0.14	0.065	0.10
125. selenium	427	6	<0.005	0.067	0.200	0.027
126. silver	427	6	<0.001	0.003	0.003	0.003
127. thallium	427	6	<0.001	<0.001	<0.001	<0.001

Table V-10 (Continued)

PRIMARY RARE EARTH METALS SAMPLING DATA
FINAL EFFLUENT

Pollutant	Stream Code	Sample Type†	Concentrations (mg/l) Source	Day 1	Day 2	Day 3
Toxic Pollutants (Continued)						
128. zinc	427	6	0.02	0.12		0.04
Nonconventional Pollutants						
Chloride	427	6	18	1,900	2,100	2,300
Iron	427	6	0.16	12	7.4	8.7
Phenolics	427	1	0.031	7.0	10	130
Total Dissolved Solids (TDS)	427	6	85	3,000	2,900	3,600
Conventional Pollutants						
Oil and Grease	427	1	<1	<1	3.5	15
Total Suspended Solids (TSS)	427	6		95	77	120
pH (standard units)	427	6	7.9	11.3	10.7	3.8

†Sample Type Code: 1 - One-time grab
6 - 24-hour automatic composite

(a),(b),(c) Reported together

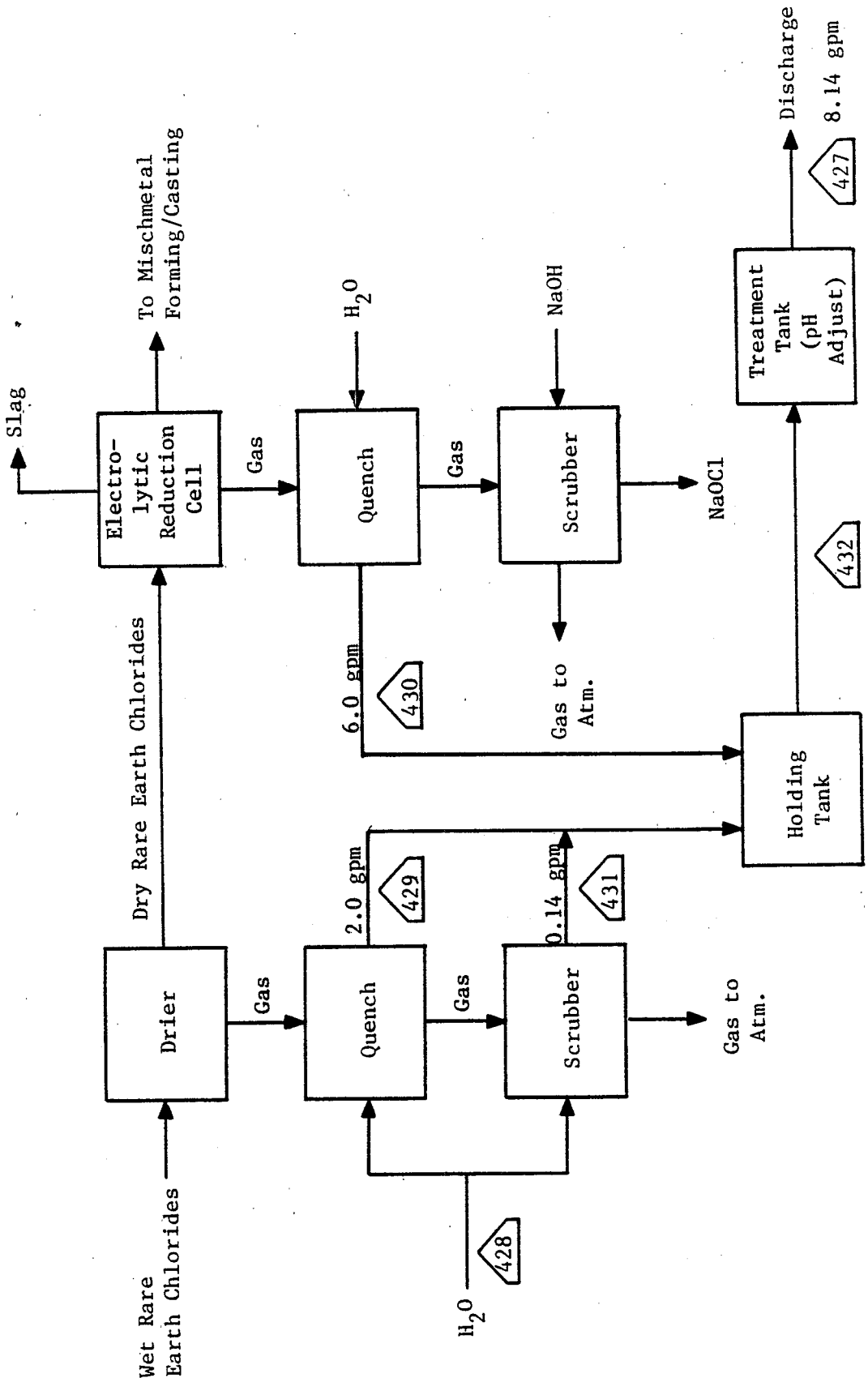

Figure V-1

SAMPLING SITES AT PRIMARY RARE EARTH METALS PLANT

THIS PAGE INTENTIONALLY LEFT BLANK

SECTION VI

SELECTION OF POLLUTANT PARAMETERS

This section examines chemical analysis data presented in Section V and discusses the selection or exclusion of toxic and other pollutants for potential limitation. The discussion that follows presents and briefly discusses the selection of conventional and nonconventional pollutants for effluent limitations. Also described is the analysis that was performed to select or exclude priority pollutants for further consideration for limitations and standards. Pollutants will be considered for limitation if they are present in concentrations treatable by the technologies considered in this analysis. The treatable concentrations used for the priority metals were the long-term performance values achievable by chemical precipitation, sedimentation, and filtration. The treatable concentrations used for the priority organics were the long-term performance values achievable by carbon adsorption.

CONVENTIONAL AND NONCONVENTIONAL POLLUTANT PARAMETERS SELECTED

This study examined samples from the primary rare earth metals subcategory for two conventional pollutant parameters (total suspended solids and pH) and several nonconventional pollutant parameters.

The conventional and nonconventional pollutants or pollutant parameters selected for limitation in this subcategory are:

total suspended solids (TSS), and
pH

None of the nonconventional pollutants or pollutant parameters was selected for limitation in this subcategory.

TSS concentrations ranging from 20 mg/l to 27 mg/l were observed in the three raw waste samples analyzed for this study. All three concentrations are above the 2.6 mg/l treatable concentration. Most of the specific methods used to remove toxic metals do so by converting these metals to precipitates, and these toxic-metal-containing precipitates should not be discharged. Meeting a limitation on total suspended solids helps ensure that removal of these precipitated toxic metals has been effective. For these reasons, total suspended solids are selected for limitation in this subcategory.

The pH values of the raw wastewater observed during this study ranged from 1.3 to 1.6, consistently outside the 7.5 to 10.0 range considered desirable for discharge. Many deleterious effects are caused by extreme pH values or rapid changes in pH. Also, effective removal of toxic metals by precipitation requires careful control of pH. Since pH control is readily attainable,

pH is selected for limitation in this subcategory.

TOXIC PRIORITY POLLUTANTS

The frequency of occurrence of the priority pollutants in the raw wastewater samples taken is presented in Table VI-1 (page 5455). Table VI-1 is based on the raw wastewater data from streams 429, 430, 431, and 432. These data provide the basis for the categorization of specific pollutants as discussed below. Treatment plant samples were not considered in the frequency count.

TOXIC POLLUTANTS NEVER DETECTED

The toxic pollutants listed in Table VI-2 (page 5459) were not detected in any raw wastewater samples from this subcategory. Therefore, they are not selected for consideration in establishing limitations.

TOXIC POLLUTANTS NEVER FOUND ABOVE THEIR ANALYTICAL QUANTIFICATION CONCENTRATION

The toxic pollutants listed below were never found above their analytical quantification concentration in any raw wastewater samples from this subcategory. Therefore, they are not selected for consideration in establishing limitations.

7. chlorobenzene
21. 2,4,6-trichlorophenol
47. bromoform
65. phenol
86. toluene
114. antimony
117. beryllium

TOXIC POLLUTANTS PRESENT BELOW CONCENTRATIONS ACHIEVABLE BY TREATMENT

The pollutants listed below are not selected for consideration in establishing limitations because they were not found in any wastewater samples from this subcategory above concentrations considered achievable by existing or available treatment technologies. These pollutants are discussed individually following the list.

121. cyanide (Total)
123. mercury

Cyanide was detected above its analytical quantification concentration of 0.02 mg/l in four samples ranging from 0.020 mg/l to 0.032 mg/l. Another seven samples were detected below the quantification concentration. Since no samples were detected above the treatable concentration of 0.047 mg/l, cyanide is not considered for limitation.

Mercury was detected above its quantification concentration of 0.001 mg/l in six samples analyzed. The remaining five samples were below quantification. The greatest concentration detected was 0.0042 mg/l of mercury. Since this is substantially below the 0.036 mg/l treatable concentration, mercury is not selected for limitation.

TOXIC POLLUTANTS DETECTED IN A SMALL NUMBER OF SOURCES

The following pollutants were not selected for limitation because they were detected in the effluent from only a small number of sources within the subcategory and are uniquely related to only those sources.

6. carbon tetrachloride
23. chloroform
44. methylene chloride
48. dichlorobromomethane
49. trichlorofluoromethane (Deleted)
51. chlorodibromomethane
66. bis(2-ethylhexyl) phthalate

Although these pollutants were not selected for limitation in establishing nationwide regulations, it may be appropriate, on a case-by-case basis, for the local permitter to specify effluent limitations

Carbon tetrachloride was detected in only four of 11 samples analyzed. The detected concentrations ranged from 0.013 mg/l to 0.082 mg/l. Treatability for carbon tetrachloride is 0.01 mg/l. Since carbon tetrachloride is present in concentrations not significantly higher than treatable concentrations, and it is present in a small number of sources, carbon tetrachloride is not selected for limitation.

Chloroform was detected in 10 samples. Two samples were below the quantification concentration, two were below the treatable concentration, and six samples were above the treatable concentration of 0.01 mg/l. Of these six samples, only four showed concentrations greater than that of the source water, 0.041 mg/l. Chloroform is a common laboratory solvent, and the frequency of detection may be due to sample contamination. The presence of chloroform in the source water attests to this. Therefore, chloroform is not selected for limitation.

Methylene chloride was detected above its treatability of 0.01 mg/l in nine samples. The concentrations ranged from 0.010 mg/l to 0.019 mg/l. These concentrations are close to the treatable concentration and would not lend themselves to effective treatment. In addition, methylene chloride is not a pollutant expected to be present in wastewaters of this industry based on consideration of raw materials and production processes employed by this industry. Therefore, methylene chloride is not selected for limitation.

Dichlorobromomethane was detected in only one of 11 wastewater samples at a concentration of 0.330 mg/l. The treatability for dichlorobromomethane is 0.01 mg/l. However, there is no reason to believe that this pollutant should be present in wastewater of this subcategory, and this result cannot be generalized as characteristic of the entire subcategory. Therefore, dichlorobromomethane is not selected for limitation.

Trichlorofluoromethane was detected in only one of the four waste streams sampled. Out of 11 samples analyzed, it was detected twice, both times above the treatability concentration of 0.01 mg/l. The two samples contained 0.012 mg/l and 0.021 mg/l. Since this is just slightly higher than could be achieved by treatment and such a small number of sources indicate that trichlorofluoromethane is present, trichlorofluoromethane is not selected for limitation.

Chlorodibromomethane was detected in only two of 11 samples analyzed. One sample containing 0.002 mg/l was below the quantification concentration of 0.010 mg/l. The other detected sample was 0.250 mg/l, above the treatable concentration of 0.01 mg/l. Since chlorodibromomethane was detected in such a small number of sources, its presence cannot be generalized to be characteristic of the entire subcategory. Therefore, chlorodibromomethane is not selected for limitation.

Bis(2-ethylhexyl) phthalate was detected in seven samples below the quantification concentration (0.010 mg/l), and four samples above the treatable concentration (0.01 mg/l). Treatable concentrations ranged from 0.013 mg/l to 0.040 mg/l. The source water contained 0.008 mg/l of bis(2-ethylhexyl) phthalate. This compound is a plasticizer commonly used in laboratory and field sampling equipment, and is not considered a pollutant specific to this subcategory. Therefore, bis(2-ethylhexyl) phthalate is not selected for limitation.

TOXIC POLLUTANTS SELECTED FOR FURTHER CONSIDERATION IN ESTABLISHING LIMITATIONS AND STANDARDS

The toxic pollutants listed below have been detected in quantities above their treatability concentrations. All these pollutants are under consideration to be selected in establishing limitations and standards for this subcategory. The toxic pollutants listed below are each discussed following the list.

4. benzene
9. hexachlorobenzene
115. arsenic
118. cadmium
119. chromium (Total)
120. copper
122. lead
124. nickel
125. selenium
126. silver

127. thallium
128. zinc

Benzene was detected above treatable concentrations in seven samples. The treatability for benzene is below the analytical quantification limit of 0.01 mg/l, and the range of sample concentrations is from 0.011 mg/l to 0.018 mg/l. Comparable concentrations of benzene were detected in samples from the final effluent. For these reasons, benzene is selected for further consideration for limitation.

Hexachlorobenzene was found above treatability in six samples. These ranged from 1.3 mg/l to 2.6 mg/l while the treatable concentration of hexachlorobenzene is below the analytical quantification limit of 0.01 mg/l. Equally high concentrations of this toxic organic were found in the final effluent samples. Therefore, hexachlorobenzene is selected for further consideration for limitation.

Arsenic was detected above treatability of 0.34 mg/l in one sample indicating 1.45 mg/l. Five samples ranging from 0.022 mg/l to 0.096 mg/l were observed below treatability. Because of its frequent occurrence, arsenic is being considered for limitation.

Cadmium was detected above treatability in two samples from the same waste stream showing 0.36 mg/l cadmium. Five samples were below the treatable concentration of 0.049 mg/l, ranging from 0.002 mg/l to 0.03 mg/l. Thus, cadmium is selected for consideration for limitation.

Chromium was detected in one waste stream above treatability of 0.07 mg/l at 1.2 mg/l and 1.3 mg/l. Seven samples were below the treatable concentration and ranged from 0.005 mg/l to 0.033 mg/l. Because of its frequency of occurrence above treatable concentrations, chromium is considered for limitation.

In 11 samples analyzed for copper, two samples were above the treatable concentration of 0.39 mg/l. Both indicated 0.66 mg/l copper and were observed in dehydration furnace wet air pollution control wastewater. In addition, eight samples ranging from 0.010 mg/l to 0.23 mg/l were detected below treatable concentrations. Therefore, copper is being further considered for limitation.

Lead was detected above treatability of 0.08 mg/l in eight samples ranging from 0.09 mg/l to 2.3 mg/l. These samples were taken from three of the four waste streams analyzed. Thus lead is selected for consideration for limitation.

Two samples from two waste streams detected nickel above its treatable concentration of 0.22 mg/l. These samples showed 0.69 mg/l and 3.1 mg/l nickel in the wastewater. Eight samples ranging from 0.005 mg/l to 0.190 mg/l were observed below the treatable concentration of nickel. Because nickel was found

above its treatable concentrations, it is selected for consideration for limitation.

Selenium was detected above its treatability of 0.20 mg/l in two wastewater samples showing 0.22 mg/l and 0.510 mg/l. Six samples below the treatable concentration ranged from 0.012 mg/l to 0.13 m/l. The source water was found to have less than 0.005 mg/l silver detected concentrations below the quantification concentration. Because treatable concentrations of silver were detected, silver is considered for limitation.

Thallium was detected above treatable concentrations in two samples taken from the same waste stream. Both samples showed 1.4 mg/l thallium, while the treatable concentration is 0.34 mg/l. All other samples analyzed were below the quantification concentration. However, thallium is selected for further consideration for limitation.

Zinc was detected above treatable concentrations in two samples from one waste stream. Both samples indicated 0.56 mg/l zinc, and the treatable concentration is 0.23 mg/l. Four samples showed zinc to be below the treatable concentration in concentrations ranging from 0.05 mg/l to 0.19 mg/l. Thus zinc is selected for consideration for limitation.

Table VI-1

FREQUENCY OF OCCURRENCE OF PRIORITY POLLUTANTS
PRIMARY RARE EARTH METALS
RAW WASTEWATER

Pollutant	Analytical Quantification Concentration (mg/l)(a)	Treatable Concentration (mg/l)(b)	Number of Streams Analyzed	Number of Samples Analyzed	ND	Detected Below Quantification Concentration	Detected Below Treatable Concentration	Detected Above Treatable Concentration
1. acenaphthene	0.010	0.01	4	11	11	0	0	0
2. acrolein	0.010	0.01	4	11	11	0	0	0
3. acrylonitrile	0.010	0.01	4	11	11	0	0	0
4. benzene	0.010	0.01	4	11	1	0	3	7
5. benzidine	0.010	0.01	4	11	11	0	0	0
6. carbon tetrachloride	0.010	0.01	4	11	7	0	0	4
7. chlorobenzene	0.010	0.01	4	11	10	1	0	0
8. 1,2,4-trichlorobenzene	0.010	0.01	4	11	11	0	0	0
9. hexachlorobenzene	0.010	0.01	4	11	3	2	0	6
10. 1,2-dichloroethane	0.010	0.01	4	11	11	0	0	0
11. 1,1,1-trichloroethane	0.010	0.01	4	11	11	0	0	0
12. hexachloroethane	0.010	0.01	4	11	11	0	0	0
13. 1,1-dichloroethane	0.010	0.01	4	11	11	0	0	0
14. 1,1,2-trichloroethane	0.010	0.01	4	11	11	0	0	0
15. 1,1,2,2-tetrachloroethane	0.010	0.01	4	11	11	0	0	0
16. chloroethane	0.010	0.01	4	11	11	0	0	0
17. bis(chloromethyl) ether	0.010	0.01	4	11	11	0	0	0
18. bis(2-chloroethyl) ether	0.010	0.01	4	11	11	0	0	0
19. 2-chloroethyl vinyl ether	0.010	0.01	4	11	11	0	0	0
20. 2-chloronaphthalene	0.010	0.01	4	11	11	0	0	0
21. 2,4,6-trichlorophenol	0.010	0.01	4	11	10	1	0	0
22. parachlorometa cresol	0.010	0.01	4	11	11	0	0	0
23. chloroform	0.010	0.01	4	11	1	2	2	6
24. 2-chlorophenol	0.010	0.01	4	11	11	0	0	0
25. 1,2-dichlorobenzene	0.010	0.01	4	11	11	0	0	0
26. 1,3-dichlorobenzene	0.010	0.01	4	11	11	0	0	0
27. 1,4-dichlorobenzene	0.010	0.01	4	11	11	0	0	0
28. 3,3'-dichlorobenzidine	0.010	0.01	4	11	11	0	0	0
29. 1,1-dichloroethylene	0.010	0.01	4	11	11	0	0	0
30. 1,2-trans-dichloroethylene	0.010	0.01	4	11	11	0	0	0
31. 2,4-dichlorophenol	0.010	0.01	4	11	11	0	0	0
32. 1,2-dichloropropane	0.010	0.01	4	11	11	0	0	0
33. 1,3-dichloropropylene	0.010	0.01	4	11	11	0	0	0
34. 2,4-dimethylphenol	0.010	0.01	4	11	11	0	0	0

Table VI-1 (Continued)

FREQUENCY OF OCCURRENCE OF PRIORITY POLLUTANTS
PRIMARY RARE EARTH METALS
RAW WASTEWATER

Pollutant	Analytical Quantification Concentration (mg/l)(a)	Treatable Concentration (mg/l)(b)	Number of Streams Analyzed	Number of Samples Analyzed	ND	Detected Below Quantification Concentration	Detected Below Treatable Concentration	Detected Above Treatable Concentration
35. 2,4-dinitrotoluene	0.010	0.01	4	11	11	0	0	0
36. 2,6-dinitrotoluene	0.010	0.01	4	11	11	0	0	0
37. 1,2-diphenylhydrazine	0.010	0.01	4	11	11	0	0	0
38. ethylbenzene	0.010	0.01	4	11	11	0	0	0
39. fluoranthene	0.010	0.01	4	11	11	0	0	0
40. 4-chlorophenyl phenyl ether	0.010	0.01	4	11	11	0	0	0
41. 4-bromophenyl phenyl ether	0.010	0.01	4	11	11	0	0	0
42. bis(2-chloroisopropyl) ether	0.010	0.01	4	11	11	0	0	0
43. bis(2-chloroethoxy) methane	0.010	0.01	4	11	11	0	0	0
44. methylene chloride	0.010	0.01	4	11	1	1	0	9
45. methyl chloride	0.010	0.01	4	11	11	0	0	0
46. methyl bromide	0.010	0.01	4	11	11	0	0	0
47. bromoform	0.010	0.01	4	11	10	1	0	0
48. dichlorobromomethane	0.010	0.01	4	11	10	0	0	1
49. trichlorofluoromethane	0.010	0.01	4	11	9	0	0	2
50. dichlorodifluoromethane	0.010	0.01	4	11	11	0	0	0
51. chlorodibromomethane	0.010	0.01	4	11	9	1	0	1
52. hexachlorobutadiene	0.010	0.01	4	11	11	0	0	0
53. hexachlorocyclopentadiene	0.010	0.01	4	11	11	0	0	0
54. isophorone	0.010	0.01	4	11	11	0	0	0
55. naphthalene	0.010	0.01	4	11	11	0	0	0
56. nitrobenzene	0.010	0.01	4	11	11	0	0	0
57. 2-nitrophenol	0.010	0.01	4	11	11	0	0	0
58. 4-nitrophenol	0.010	0.01	4	11	11	0	0	0
59. 2,4-dinitrophenol	0.010	0.01	4	11	11	0	0	0
60. 4,6-dinitro-o-cresol	0.010	0.01	4	11	11	0	0	0
61. N-nitrosodimethylamine	0.010	0.01	4	11	11	0	0	0
62. N-nitrosodiphenylamine	0.010	0.01	4	11	11	0	0	0
63. N-nitrosodi-n-propylamine	0.010	0.01	4	11	11	0	0	0
64. pentachlorophenol	0.010	0.01	4	11	11	0	0	0
65. phenol	0.010	0.01	4	11	9	2	0	0
66. bis(2-ethylhexyl) phthalate	0.010	0.01	4	11	0	7	0	4

Table VI-1 (Continued)

FREQUENCY OF OCCURRENCE OF PRIORITY POLLUTANTS
PRIMARY RARE EARTH METALS
RAW WASTEWATER

Pollutant	Analytical Quantification Concentration (mg/l)(a)	Treatable Concentration (mg/l)(b)	Number of Streams Analyzed	Number of Samples Analyzed	ND	Detected Below Quantification Concentration	Detected Below Treatable Concentration	Detected Above Treatable Concentration
67. butyl benzyl phthalate	0.010	0.01	4	11	11	0	0	0
68. di-n-butyl phthalate	0.010	0.01	4	11	11	0	0	0
69. di-n-octyl phthalate	0.010	0.01	4	11	11	0	0	0
70. diethyl phthalate	0.010	0.01	4	11	11	0	0	0
71. dimethyl phthalate	0.010	0.01	4	11	11	0	0	0
72. benzo(a)anthracene	0.010	0.01	4	11	11	0	0	0
73. benzo(a)pyrene	0.010	0.01	4	11	11	0	0	0
74. 3,4-benzofluoranthene	0.010	0.01	4	11	11	0	0	0
75. benzo(k)fluoranthene	0.010	0.01	4	11	11	0	0	0
76. chrysene	0.010	0.01	4	11	11	0	0	0
77. acenaphthylene	0.010	0.01	4	11	11	0	0	0
78. anthracene (c)	0.010	0.01	4	11	11	0	0	0
79. benzo(ghi)perylene	0.010	0.01	4	11	11	0	0	0
80. fluorene	0.010	0.01	4	11	11	0	0	0
81. phenanthrene (c)	0.010	0.01	4	11	11	0	0	0
82. dibenzo(a,h)anthracene	0.010	0.01	4	11	11	0	0	0
83. indeno(1,2,3-cd)pyrene	0.010	0.01	4	11	11	0	0	0
84. pyrene	0.010	0.01	4	11	11	0	0	0
85. tetrachloroethylene	0.010	0.01	4	11	11	0	0	0
86. toluene	0.010	0.01	4	11	9	2	0	0
87. trichloroethylene	0.010	0.01	4	11	11	0	0	0
88. vinyl chloride	0.010	0.01	4	11	11	0	0	0
89. aldrin	0.005	0.01	4	11	11	0	0	0
90. dieldrin	0.005	0.01	4	11	11	0	0	0
91. chlordane	0.005	0.01	4	11	11	0	0	0
92. 4,4'-DDT	0.005	0.01	4	11	11	0	0	0
93. 4,4'-DDE	0.005	0.01	4	11	11	0	0	0
94. 4,4'-DDD	0.005	0.01	4	11	11	0	0	0
95. alpha-endosulfan	0.005	0.01	4	11	11	0	0	0
96. beta-endosulfan	0.005	0.01	4	11	11	0	0	0
97. endosulfan sulfate	0.005	0.01	4	11	11	0	0	0
98. endrin	0.005	0.01	4	11	11	0	0	0
99. endrin aldehyde	0.005	0.01	4	11	11	0	0	0
100. heptachlor	0.005	0.01	4	11	11	0	0	0
101. heptachlor epoxide	0.005	0.01	4	11	11	0	0	0

Table VI-1 (Continued)

FREQUENCY OF OCCURRENCE OF PRIORITY POLLUTANTS
PRIMARY RARE EARTH METALS
RAW WASTEWATER

Pollutant	Analytical Quantification Concentration (mg/l)(a)	Treatable Concentration (mg/l)(b)	Number of Streams Analyzed	Number of Samples Analyzed	ND	Detected Below Quantification Concentration	Detected Below Treatable Concentration	Detected Above Treatable Concentration
102. alpha-BHC	0.005	0.01	4	11	11	0	0	0
103. beta-BHC	0.005	0.01	4	11	11	0	0	0
104. gamma-BHC	0.005	0.01	4	11	11	0	0	0
105. delta-BHC	0.005	0.01	4	11	11	0	0	0
106. PCB-1242 (d)	0.005	0.01	4	11	11	0	0	0
107. PCB-1254 (d)	0.005	0.01	4	11	11	0	0	0
108. PCB-1221 (d)	0.005	0.01	4	11	11	0	0	0
109. PCB-1232 (e)	0.005	0.01	4	11	11	0	0	0
110. PCB-1248 (e)	0.005	0.01	4	11	11	0	0	0
111. PCB-1260 (e)	0.005	0.01	4	11	11	0	0	0
112. PCB-1016 (e)	0.005	0.01	4	11	11	0	0	0
113. toxaphene	0.005	0.01	4	11	11	0	0	0
114. antimony	0.100	0.47	4	11	0	11	0	0
115. arsenic	0.010	0.34	4	11	0	5	5	1
116. asbestos	10 MFL	10 MFL		Not Analyzed				
117. beryllium	0.010	0.20	4	11	0	11	0	0
118. cadmium	0.002	0.049	4	11	0	4	5	2
119. chromium	0.005	0.07	4	11	0	2	7	2
120. copper	0.009	0.39	4	11	0	1	8	2
121. cyanide (f)	0.02	0.047	4	11	0	7	4	0
122. lead	0.020	0.08	4	11	0	1	2	8
123. mercury	0.0001	0.036	4	11	0	5	6	0
124. nickel	0.005	0.22	4	11	0	1	8	2
125. selenium	0.01	0.20	4	11	0	3	6	2
126. silver	0.02	0.07	4	11	0	8	0	3
127. thallium	0.100	0.34	4	11	0	9	0	2
128. zinc	0.050	0.23	4	11	0	5	4	2
129. 2,3,7,8-tetrachlorodibenzo-p-dioxin (TCDD)	Not Analyzed							

(a) Analytical quantification concentration was reported with the data (see Section V).

(b) Treatable concentrations are based on performance of chemical precipitation, sedimentation, and filtration.

(c), (d), (e) Reported together.

(f) Analytical quantification concentration for EPA Method 335.2, Total Cyanide Methods for Chemical Analysis of Water and Wastes, EPA-600/4-79-020, March 1979.

TABLE VI-2

TOXIC POLLUTANTS NEVER DETECTED

1. acenaphthene
2. acrolein
3. acrylonitrile
5. benzidene
8. 1,2,4-trichlorobenzene
10. 1,2-dichloroethane
11. 1,1,1-trichloroethane
12. hexachloroethane
13. 1.1-dichloroethane
14. 1,1,2-trichloroethane
15. 1,1,2,2-tetrachloroethane
16. chloroethane
17. bis (chloromethyl) ether (Deleted)
18. bis (2-chloroethyl) ether
19. 2-chloroethyl vinyl ether
20. 2-chloronaphthalene
22. para-chloro meta-cresol
24. 2-chlorophenol
25. 1,2-dichlorobenzene
26. 1,3-dichlorobenzene
27. 1,4-dichlorobenzene
28. 3,3'dichlorobenzidine
29. 1,1-dichloroethylene
30. 1,2-trans-dichloroethylene
31. 2,4-dichlorophenol
32. 1,2-dichloropropane
33. 1,2.dichloropropylene
34. 2,4-dimethylphenol
35. 2,4-dinitrotoluene
36. 2,6-dinitrotoluene
37. 1,2-diphenylhydrazine
38. ethylbenzene
39. fluoranthene
40. 4-chlorophenyl phenyl ether
41. 4-bromophenyl phenyl ether
42. bis(2-chloroisopropyl) ether
43. bis(2-chloroethoxy) methane
44. methyl chloride (chloromethane)
46. methyl bromide (bromomethane)
50. dichlorodifluoromethane (Deleted)
52. hexachlorobutadiene
53. hexachlorocyclopentadiene
54. isophorone

TABLE VI-2 (Continued)

TOXIC POLLUTANTS NEVER DETECTED

55. naphthalene
56. nitrobenzene
57. 2-nitrophenol
58. 4.nitrohpenol
59. 2,4-dinitrophenol
60. 4,6.dinitro-o-cresol
61. N-nitrosodimethylamine
62. N-nitrosodiphenylamine
63. N-nitrosodi-n-propylamine
64. pentachlorophenol
67. butyl benzyl phthalate
68. di-n-butyl phthalate
69. di-n-octyl phthalate
70. diethyl phthalate
71. dimethyl phthalate
72. benzo (a)anthracene
73. benzo (a)pyrene
74. 3,4-benzofluoranthene
75. benzo (k)fluoranthane
76. chrysene
77. acenaphthylene
78. anthracene
79. benzo(ghi)perylene
80. fluorene
81. phenanthrene
82. dibenzo (a,h)anthracene
83. indeno (1,2,3-cd)pyrene
84. pyrene
85. tetrachloroethylene
87. trichloroethylene
88. vinyl chloride
89. aldrin
90. dieldrin
91. chlordane
92. 4,4'-DDT
93. 4,4 -DDE(p,p'DDX)
94. 4,4'-DDD(p,p'TDE)
95. alpha-endosulfan
96. beta-endosulfan
97. endosulfan sulfate
98. endrin
99. endrin aldehyde

TABLE VI-2 (Continued)

TOXIC POLLUTANTS NEVER DETECTED

100. heptachlor
101. heprachlor epoxide
102. alpha-BHC
103. beta-BHC
104. gamma-BHC (lindane)
105. delta-BHC
106. PCB-1242 (Arochlor 1242)
107. PCB-1254 (Arochlor 1254)
108. PCB-1221 (Arochlor 1221)
109. PCB-1234 (Arochlor 1232)
110. PCB-1248 (Arochlor 1248)
111. PCB-1260 (Arochlor 1260)
112. PCB-1016 (Arochlor 1016)
113. toxaphene
116. asbestos (Fibrous)
129. 2.3,7,8-tetra chlorodibenzo-p-dioxin (TCDD)

THIS PAGE INTENTIONALLY LEFT BLANK

SECTION VII

CONTROL AND TREATMENT TECHNOLOGIES

The preceding sections of this supplement discussed the sources, flows, and characteristics of the wastewaters generated in the primary rare earth metals plants. This section summarizes the description of these wastewaters and indicates the treatment technologies which are currently practiced in the primary rare earth metals subcategory for each waste stream. Secondly, this section presents the control and treatment technology options which were examined by the Agency for possible application to the primary rare earth metals subcategory.

CURRENT CONTROL AND TREATMENT PRACTICES

This section presents a summary of the control and treatment technologies that are currently applied to each of the sources generating wastewater in this subcategory. As discussed in Section V, wastewater associated with the primary rare earth metals subcategory is characterized by the presence of the toxic metal pollutants, treatable concentrations of hexachlorobenzene and benzene, and suspended solids. This analysis is supported by the raw (untreated) wastewater data presented for specific sources as well as combined waste streams in Section V. Generally, these pollutants are present in each of the waste streams at concentrations above treatability and these waste streams are commonly combined for treatment. Construction of one wastewater treatment system for combined treatment allows plants to take advantage of economic scale, and in some instances, to combine streams or different alkalinity to reduce treatment chemical requirements. Both discharging plants in this subcategory currently have combined wastewater treatment systems. One has lime precipitation and sedimentation, and the other employs a pH control system. Four options have been selected for consideration for BPT, BAT, NSPS, and pretreatment based on combined treatment of these compatible waste streams.

The two plants in the rare earth metals subcategory that produce mischmetal do not practice treatment of individual waste streams. The treatment of wastewater occurs after all waste streams have been combined; for this reason a short summary of the waste streams generated will be followed by a discussion of the present treatment levels at the two plants in this subcategory.

DRYER VENT WATER QUENCH AND SCRUBBER

Drying of wet rare earth chlorides produces off-gases which are quenched with water or scrubbed. The gases are cooled, particulates removed, and hydrochloric acid is absorbed in these operations.

DRYER VENT CAUSTIC WET AIR POLLUTION CONTROL

After dryer off-gases are quenched or scrubbed with water they may be routed to a caustic scrubber. This provides for more complete removal of particulates and acid vapors. Scrubber liquor is discharged to treatment and the gases vented to the atmosphere.

ELECTROLYTIC CELL WATER QUENCH AND SCRUBBER

Reduction of dry rare earth chlorides by electrolysis produces off-gases which are quenched by continuous water spray or passed through a water scrubber. Similar to the drier operation, the gases are cooled, particulates removed, and hydrochloric acid is absorbed by the quench or scrubber water. Upon discharge to treatment, this wastewater stream has a pH in the range of 1.5.

ELECTROLYTIC CELL CAUSTIC WET AIR POLLUTION CONTROL

After the quench or scrubber step described above, a caustic scrubber may be used to remove chlorine gas from the gas stream. Sodium hypochlorite is formed in the scrubber and after recycling to obtain a desired concentration, it is removed and sold for industrial uses. Thus the potential wastewater stream generated by this operation becomes a by-product.

SODIUM HYPOCHLORITE FILTER BACKWASH

Sodium hypochlorite produced in the electrolytic cell caustic scrubber is filtered to remove residual particulates prior to storage as a salable product. Depending on the type of filter used, backwashing may be necessary for effective and efficient filtration. This wastewater stream is discharged to treatment.

TREATMENT PRACTICES

Plants in this subcategory treat the combined wastewater flow from all the production operations. The wastewater streams are combined for treatment in a holding tank, then pumped to a mixing tank into which sodium hydroxide or lime is added to raise the pH. After sediment removal,the neutralized wastewater is then discharged.

CONTROL AND TREATMENT OPTIONS

The Agency examined four control and treatment technology options that are applicable to the primary rare earth metals subcategory. As the sampling and analytical data in Section V indicate, the wastewaters from this subcategory contain various types of contaminants including dissolved toxic metals, and suspended solids, as well as treatable concentrations of benzene and hexachlorobenzene. The treatment options selected for evaluation represent a combination of in-process flow reduction and end-of-pipe treatment technologies.

OPTION A

The Option A treatment scheme consists of chemical precipitation and sedimentation technology. Specifically, lime or some other alkaline compound is used to precipitate priority metal ions as metal hydroxides. The metal hydroxides and suspended solids settle out and the sludge is collected. Vacuum filtration is used to dewater the sludge.

OPTION B

Option B for the primary rare earth metals subcategory consists of the Option A (chemical precipitation and sedimentation) treatment scheme plus flow reduction techniques to reduce the discharge of wastewater volume. In-process changes which allow for water recycle and reuse are the principal control mechanisms for flow reduction.

OPTION C

Option C for the primary rare earth metals subcategory consists of all control and treatment requirements of Option B (in-process flow reduction, chemical precipitation and sedimentation) plus multimedia filtration technology added at the end of the Option B treatment scheme. Multimedia filtration is used to remove suspended solids, including precipitates of metals, beyond the concentration attainable by gravity sedimentation. The filter suggested is of the gravity, mixed-media type, although other forms of filters, such as rapid sand filters or pressure filters would perform satisfactorily. The addition of filters also provides consistent removal during periods of time in which there are rapid increases in flows or loadings of pollutants to the treatment system.

OPTION E

Option E for the primary rare earth metals subcategory consists of all of the control and treatment requirements of Option C (in-process flow reduction, chemical precipitation and sedimentation, followed by multimedia filtration) with the addition of granular activated carbon technology at the end of the Option C treatment scheme. The activated carbon process is utilized to control the discharge of hexachlorobenzene and other toxic organic pollutants.

THIS PAGE INTENTIONALLY LEFT BLANK

SECTION VIII

COSTS, ENERGY, AND NONWATER QUALITY ASPECTS

This section presents a summary of compliance costs for the primary rare earth metals subcategory and a description of the treatment options and subcategory-specific assumptions used to develop these estimates. Together with the estimated pollutant removal performance presented in Sections X and XII of this supplement, these cost estimates provide a basis for evaluating each regulatory option. These cost estimates are also used in determining the probable economic impact of regulation on the subcategory at different pollutant discharge levels. In addition, this section addresses nonwater quality environmental impacts of wastewater treatment and control alternatives, including air pollution, solid wastes, and energy requirements, which are specific to the primary rare earth metals subcategory.

TREATMENT OPTIONS FOR EXISTING SOURCES

As discussed in Section VII, four treatment options have been developed for existing primary rare earth metals sources. The treatment schemes for each option are summarized below and schematically presented in Figures X-1 through X-4 (pages 5499 - 5502).

OPTION A

Option A consists of chemical precipitation and sedimentation technology.

OPTION B

Option B consists of in-process flow reduction via holding tanks with pH adjustment for the electrolytic cell water quench and scrubber, and dryer vent water quench and scrubber waste streams, followed by chemical precipitation and sedimentation.

OPTION C

Option C consists of Option B (in-process flow reduction, chemical precipitation and sedimentation) with the addition of multimedia filtration at the end of the Option B treatment scheme.

OPTION E

Option E consists of Option C (in-process flow reduction, chemical precipitation and sedimentation, followed by multimedia filtration) with the addition of granular activated carbon technology at the end of Option C treatment scheme. The activated carbon process is utilized to control the discharge of hexachlorobenzene and other toxic organic pollutants.

COST METHODOLOGY

Plant-by-plant compliance costs for the nonferrous metals manufacturing category have been revised as necessary following proposal. These revisions calculate incremental costs, above treatment already in place, necessary to comply with the promulgated effluent limitations and standards and are presented in the administrative record supporting this regulation. A comparison of the costs developed for proposal and the revised costs for the final regulation are presented in Table VIII-1 (page 5471) for direct indirect dischargers.

Each subcategory contains a unique set of wastewater streams requiring certain subcategory-specific assumptions to develop compliance costs. The major assumptions specific to the primary rare earth metals subcategory are discussed briefly below.

(1) Activated carbon adsorption columns were sized to remove hexachlorobenzene to 0.01 mg/l. The activated carbon exhaustion rates were determined from the influent hexachlorobenzene concentration based on sampling data, the desired effluent concentration (0.01 mg/l), and a carbon adsorption isotherm for hexachlorobenzene. A 50 percent excess factor was also included in the exhaustion rate.

(2) Activated carbon materials costs were based on once-through carbon use and subsequent disposal of the spent carbon as a hazardous waste. This option resulted from a least-cost evaluation of three alternatives: (1) once-through use and disposal, (2) off-site regeneration of spent carbon, and (3) on-site regeneration of spent carbon.

(3) Recycle of quench water and air pollution control scrubber liquor is based on recycle through holding tanks. Annual costs reflect a sodium hydroxide feed system included to adjust scrubber effluent to neutral pH prior to reuse.

NONWATER QUALITY ASPECTS

A general discussion of the nonwater quality aspects of the control and treatment options considered for the nonferrous metals category is contained in Section VIII of Vol. I. Nonwater quality impacts specific to the primary rare earth metals subcategory, including energy requirements, solid waste and air pollution are discussed below.

ENERGY REQUIREMENTS

The methodology used for determining the energy requirements for the various options is discussed in Section VIII of the General Development Document. Energy requirements for Option A are

estimated at 66,000 kwh/yr, and for Option E the estimated requirement is 92,000 kwh/yr. Option E energy requirements increase over those for Option A because even though Option E includes wastewater recycle, the benefits of treating less water do not surpass the added cost of recycle equipment. In addition, Option E includes multimedia filtration and activated carbon adsorption which are energy intensive processes. However, both options represent less than 1 percent of a typical plant's energy usage. It is therefore concluded that the energy requirements of the treatment options considered will have no significant impact on total plant energy consumption.

SOLID WASTE

Sludge generated in the primary rare earth metals subcategory is due to the precipitation of metal hydroxides and carbonates using lime or other chemicals. Sludges associated with the primary rare earth metals subcategory will necessarily contain quantities of toxic metal pollutants. These sludges are not subject to regulation as hazardous wastes since wastes generated by primary smelters and refiners are currently exempt from regulation by Act of Congress (Resource Conservation and Recovery Act (RCRA), Section 3001(b)), as interpreted by EPA. If a small excess of lime is added during treatment, the Agency does not believe these sludges would be identified as hazardous under RCRA in any case. (Compliance costs include this amount of lime.) This judgment is based on the results of Extraction Procedure (EP) toxicity tests performed on similar sludges (toxic metal-bearing sludges) generated by other industries such as the iron and steel industry. A small amount of excess lime was added during treatment, and the sludges subsequently generated passed the toxicity test. See CFR §261.24. Thus, the Agency believes that the wastewater sludges will similarly not be EP toxic if the recommended technology is applied.

Although it is the Agency's view that solid wastes generated as a result of these guidelines are not expected to be hazardous, generators of these wastes must test the waste to determine if the wastes meet any of the characteristics of hazardous waste (see 40 CFR 262.11).

If these wastes should be identified or are listed as hazardous, they will come within the scope of RCRA's "cradle to grave" hazardous waste management program, requiring regulation from the point of generation to point of final disposition. EPA's generator standards would require generators of hazardous nonferrous metals manufacturing wastes to meet containerization, labeling, recordkeeping, and reporting requirements; if plants dispose of hazardous wastes off-site, they would have to prepare a manifest which would track the movement of the wastes from the generator's premises to a permitted off-site treatment, storage, or disposal facility. See 40 CFR 262.20 45 FR 33142 (May 19, 1980), as amended at 45 FR 86973 (December 31, 1980). The transporter regulations require transporters of hazardous wastes to comply with the manifest system to assure that the wastes are

delivered to a permitted facility. See 40 CFR 263.20 45 FR 33151 (May 19, 1980), as amended at 45 FR 86973 (December 31, 1980). Finally, RCRA regulations establish standards for hazardous waste treatment, storage, and disposal facilities allowed to receive such wastes. See 40 CFR Part 464 46 FR 2802 (January 12, 1981), 47 FR 32274 (July 26, 1982).

Even if these wastes are not identified as hazardous, they still must be disposed of in compliance with the Subtitle D open dumping standards, implementing 4004 of RCRA. See 44 FR 53438 (September 13, 1979). It is estimated that the primary rare earth metals subcategory will generate 8.5 metric tons of sludge per year when implementing the promulgated BPT treatment technology. The Agency has calculated as part of the costs for wastewater treatment the cost of hauling and disposing of these wastes.

AIR POLLUTION

There is no reason to believe that any substantial air pollution problems will result from implementation of chemical precipitation, sedimentation, multimedia filtration, and activated carbon adsorption. These technologies transfer pollutants to solid waste and are not likely to transfer pollutants to air.

TABLE VIII-1

COST OF COMPLIANCE FOR THE PRIMARY RARE EARTH METALS SUBCATEGORY
DIRECT AND INDIRECT DISCHARGERS

These costs are not presented here because the data on which they are based have been claimed to be confidential.

THIS PAGE INTENTIONALLY LEFT BLANK

SECTION IX

BEST PRACTICABLE CONTROL TECHNOLOGY CURRENTLY AVAILABLE

This section defines the effluent characteristics attainable through the application of best practicable control technology currently available (BPT). BPT reflects the existing performance by plants of various sizes, ages, and manufacturing processes within the primary rare earth metals subcategory, as well as the established performance of the recommended BPT systems. Particular consideration is given to the treatment already in place at the plants within the data base.

The factors considered in identifying BPT include the total cost of applying the technology in relation to the effluent reduction benefits from such application, the age of equipment and facilities involved, the manufacturing processes used, nonwater quality environmental impacts (including energy requirements), and other factors the Administrator considers appropriate. In general, the BPT level represents the average of the existing performances of the plants of various ages, sizes, processes, or other common characteristics. Where existing performance is uniformly inadequate, BPT may be transferred from a different subcategory or category. Limitations based on transfer of technology are supported by a rationale concluding that the technology is, indeed, transferable, and a reasonable prediction that it will be capable of achieving the prescribed effluent limits. BPT focuses on end-of-pipe treatment rather than process changes or internal controls, except where such practices are common industry practice.

TECHNICAL APPROACH TO BPT

The Agency studied the nonferrous metals category to identify the processes used, the wastewaters generated, and the treatment processes installed. Information was collected from industry using data collection portfolios, and specific plants were sampled and the wastewaters analyzed. In making technical assessments of data, reviewing manufacturing processes, and assessing wastewater treatment technology options, both indirect and direct dischargers have been considered as a single group. An examination of plants and processes did not indicate any process differences based on the type of discharge, whether it be direct or indirect.

As explained in Section IV, the primary rare earth metals subcategory has been subdivided into five potential wastewater sources. Since the water use, discharge rates and pollutant characteristics of each of these wastewaters is potentially unique, effluent limitations will be developed for each of the five subdivisions.

For each of the subdivisions, a specific approach was followed for the development of BPT mass limitations. The first requirement to calculate these limitations is to account for production and flow variability from plant to plant. Therefore, a unit of production or a production normalizing parameter (PNP) was determined for each waste stream which could then be related to the flow from the process to determine a production normalized flow. Selection of the PNP for each process element is discussed in Section IV. Each plant within the subcategory was then analyzed to determine which subdivisions were present, the specific flow rates generated for each subdivision, and the specific production normalized flows for each subdivision. This analysis is discussed in detail in Section V. Nonprocess wastewater such as rainfall runoff and noncontact cooling water is not considered in the analysis.

Production normalized flows for each subdivision were then analyzed to determine the flow to be used as part of the basis for BPT mass limitations. The selected flow (sometimes referred to as the BPT regulatory flow or BPT discharge rate) reflects the water use controls which are common practices within the category. The BPT regulatory flow is based on the average of all applicable data. Plants with normalized flows above the average may have to implement some method of flow reduction to achieve the BPT limitations.

The second requirement to calculate mass limitations is the set of concentrations that are achievable by application of the BPT level of treatment technology. Section VII discusses the various control and treatment technologies which are currently in place for each wastewater source. In most cases, the current control and treatment technologies consist of chemical precipitation and sedimentation (lime and settle technology) and a combination of reuse and recycle to reduce flow.

Using these regulatory flows and the achievable concentrations, the next step is to calculate mass loadings for each wastewater source or subdivision. This calculation was made on a stream-by-stream basis, primarily because plants in this subcategory may perform one or more of the operations in various combinations. The mass loadings (milligrams of pollutant per kilogram production - mg/kg) are based on multiplying the BPT regulatory flow (l/kkg) by the concentration achievable by the BPT level of treatment technology (mg/l) for each pollutant parameter to be limited under BPT. These mass loadings are published in the Federal Register and in CFR Part 421 as the effluent limitations.

The mass loadings which are allowed under BPT for each plant will be the sum of the individual mass loadings for the various wastewater sources which are found at particular plants. Accordingly, all the wastewater generated within a plant may be combined for treatment in a single or common treatment system, but the effluent limitations for these combined wastewaters are based on the various wastewater sources which actually contribute to the combined flow. This method accounts for the variety of

combinations of wastewater sources and production processes which may be found at primary rare earth metals plants.

The Agency usually establishes wastewater limitations in terms of mass rather than concentration. This approach prevents the use of dilution as a treatment method (except for controlling pH). The production normalized wastewater flow (l/kkg) is a link between the production operations and the effluent limitations. The pollutant discharge attributable to each operation can be calculated from the normalized flow and effluent concentration achievable by the treatment technology and summed to derive an appropriate limitation for each plant.

INDUSTRY COST AND POLLUTANT REMOVAL ESTIMATES

In balancing costs in relation to pollutant removal estimates, EPA considers the volume and nature of existing discharges, the volume and nature of discharges expected after application of BPT, the general environmental effects of the pollutants, and the cost and economic impacts of the required pollutant control level. The Act does not require or permit consideration of water quality problems attributable to particular point sources or industries, or water quality improvements in particular water quality bodies. Accordingly, water quality considerations were not the basis for selecting the proposed or promulgated BPT.

The methodology for calculating pollutant removal estimates and plant compliance costs is discussed in Section X. The pollutant removal estimates made for proposal have been revised based on new flow and production data, and adjustments in the number of subdivisions. Table X-1 (page 5493) shows the pollutant removal estimates for each treatment option for direct dischargers. Compliance costs for direct dischargers are presented in Table X-2 (page 5494).

BPT OPTION SELECTION

The technology basis for the promulgated BPT limitations, Option A, is equivalent to the proposed BPT technology. Option A includes chemical precipitation and sedimentation technology to remove metals and solids from combined wastewaters and to control pH. These technologies are demonstrated and economically achievable since they are already in place at direct dischargers in this subcategory.

There are no expected capital or additional annual costs for achieving the promulgated BPT because the technology is already in-place. The end-of-pipe treatment configuration for Option A is presented in Figure IX-1 (page 5483).

WASTEWATER DISCHARGE RATES

A BPT discharge rate is calculated for each subdivision based on the average of the flows of the existing plants, as determined from analysis of the data collection portfolios. The discharge

rate is used with the achievable treatment concentrations to determine BPT effluent limitations. Since the discharge rate may be different for each wastewater source, separate production normalized discharge rates for each of the five wastewater sources are discussed below and summarized in Table IX-1 (page 5381). The discharge rates are normalized on a production basis by relating the amount of wastewater generated to the mass of the intermediate product which is produced by the process associated with the waste stream in question. These production normalizing parameters, or PNPs, are also listed in Table IX-1.

Section V of this document further describes the discharge flow rates and presents the water use and discharge flow rates for each plant by subdivision in Tables V-1 through V-5.

DRYER VENT WATER QUENCH AND SCRUBBER

At proposal, this subdivision was combined with the second subdivision and called dehydration furnace quench and scrubber. The BPT wastewater discharge rate for the combined subdivision was 14,800 l/kkg of mischmetal produced from wet rare earth chlorides. This discharge rate was based on the average reported water use. The reported water use ranged from 11,600 l/kkg to 17,900 l/kkg. Since proposal, new flow and production information prompted a study of the combined subdivision. EPA then decided to create two separate subdivisions to better address the differences between plants in this subcategory.

The BPT wastewater discharge rate for dryer vent water quench and wet air pollution control is 10,563 l/kkg (2,531 gal/ton) of mischmetal produced from wet rare earth chlorides. This rate is allocated only for those plants which use a furnace to dehydrate rare earth chloride raw material prior to electrolytic refining, and treat the off-gases with a continuous water quench or with a water scrubber. The BPT wastewater discharge rate is based on the water use at a plant reporting no recycle of wastewater. This plant uses 10,563 l/kkg. Because other plants presently operate with recycle, recycle is more appropriately used as a basis for the BAT discharge allowance.

DRYER VENT CAUSTIC WET AIR POLLUTION CONTROL

No separate BPT wastewater discharge rate was proposed for this subdivision because this present subdivision was combined with the above subdivision at proposal. Since EPA has decided to use separate subdivisions, a separate discharge rate for this wastewater stream has been developed.

The BPT wastewater discharge rate for dryer vent caustic wet air pollution control wastewater is 734 l/kkg (176 gal/ton) of mischmetal produced from wet rare earth chlorides. This rate is allocated only for those plants which use a caustic scrubber, in addition to a water quench or water scrubber, to treat vent gases from a wet rare earth chlorides dehydration furnace. This BPT wastewater discharge rate is based on the reported discharge

flow.

ELECTROLYTIC CELL WATER QUENCH AND SCRUBBER

The BPT wastewater discharge rate used at proposal for electrolytic cell water quench and scrubber wastewater was 16,400 l/kkg (3,930 gal/ton) of total mischmetal produced. This rate was based on the average of the reported water use data for this wastewater stream. At proposal, EPA understood that no plant recycled this wastewater based on dcp information. Post-proposal comments and information indicated otherwise; therefore, a new BPT rate was chosen for promulgation.

The BPT wastewater discharge rate at promulgation for electrolytic cell water quench and scrubber is 12,682 l/kkg (3,039 gal/ton) of total mischmetal produced. This rate is allocated only for those plants which electrolytically reduce rare earth chlorides to mischmetal and treat the off-gases with a continuous water quench or a water scrubber system before any further treatment of the exhaust gases. This BPT wastewater discharge rate is based on the water use at a plant reporting no recycle of scrubber or quench water. This plant uses 12,682 l/kkg.

ELECTROLYTIC CELL CAUSTIC WET AIR POLLUTION CONTROL

The BPT wastewater discharge rate for electrolytic cell caustic wet air pollution control wastewater is zero liters per kkg of total mischmetal produced. This rate is allocated only for those plants which electrolytically reduce rare earth chlorides to mischmetal and, after water quenching or scrubbing, pass the exhaust gases through a caustic scrubber to produce sodium hypochlorite. Plants reporting use of this system operate with zero discharge. The scrubber liquor is used in a by-product recovery operation that produces sodium hypochlorite from a reaction between chlorine gas produced in electrolytic refining and the sodium hydroxide used as the scrubber liquor. This solution is then sold for industrial use; thus no waste stream is generated by this operation. Because of this, it is appropriate that the BPT regulatory flow should be zero.

SODIUM HYPOCHLORITE FILTER BACKWASH

A BPT discharge rate for sodium hypochlorite filter backwash was never proposed because dcp information used for proposal did not quantify any wastewater discharge from this operation. Comments received from industry after proposal requested an allowance for the filter backwash and supplied information so that water use and discharge rates could be calculated. This wastewater discharge rate is being added in response to the comments received on the proposed regulation.

The BPT wastewater discharge rate for sodium hypochlorite filter backwash is 362 l/kkg (87 gal/ton) of total mischmetal produced. This rate is allocated only for those plants which operate a

filter for filtering sodium hypochlorite which requires periodic backwashing in order to operate properly and efficiently. The promulgated discharge rate is based on the reported water use for this wastewater stream.

REGULATED POLLUTANT PARAMETERS

The raw wastewater concentrations from individual operations and the subcategory as a whole were examined to select certain pollutant parameters for limitation. This examination and evaluation was presented in Section VI. A total of five pollutants or pollutant parameters are selected for limitation under BPT and are listed below:

119. chromium (Total)
122. lead
124. nickel
TSS
pH

EFFLUENT LIMITATIONS

The pollutant concentrations achievable by application of the promulgated BPT are discussed in Section VII of this supplement. These treatment effectiveness concentrations (both one day maximum and monthly average values) are multiplied by the BPT normalized discharge flows summarized in Table IX-1 (page 5479) to calculate the mass of pollu-tants allowed to be discharged per mass of product. The results of these calculations in milligrams of pollutant per kilogram of product represent the BPT effluent limitations and are presented in Table IX-2 (page 5480) for each individual waste stream.

Table IX-1

BPT WASTEWATER DISCHARGE RATES FOR THE PRIMARY RARE EARTH METALS SUBCATEGORY

Wastewater Stream	BPT Normalized Discharge Rate l/kkg	BPT Normalized Discharge Rate gal/ton	Production Normalizing Parameter
Dryer Vent Water Quench and Scrubber	10,563	2,531	Mischmetal produced from wet rare earth chlorides
Dryer Vent Caustic Wet Air Pollution Control	734	176	Mischmetal produced from wet rare earth chlorides
Electrolytic Cell Water Quench and Scrubber	12,682	3,039	Total mischmetal produced
Electrolytic Cell Caustic Wet Air Pollution Control	0	0	Total mischmetal produced
Sodium Hypochlorite Filter Backwash	362	87	Total mischmetal produced

TABLE IX-2

BPT MASS LIMITATIONS FOR THE
PRIMARY RARE EARTH METALS SUBCATEGORY

(a) Dryer Vent Water Quench and Wet Air Pollution Control BPT

Pollutant or Pollutant Property	Maximum for Any One Day	Maximum for Monthly Average
	mg/kg (lb/million lbs) of mischmetal produced from wet rare earth chlorides	
Arsenic	22.080	9.824
Cadmium	3.591	1.584
*Chromium	4.648	1.901
Copper	20.070	10.560
*Lead	4.436	2.113
*Nickel	20.280	13.420
Selenium	12.990	5.810
Silver	4.331	1.796
Thallium	21.650	9.612
Zinc	15.420	6.443
*TSS	433.100	206.000
*pH	Within the range of 7.5 to 10.0 at all times	

(b) Dryer Vent Caustic Wet Air Pollution Control BPT

Pollutant or Pollutant Property	Maximum for Any One Day	Maximum for Monthly Average
	mg/kg (lb/million lbs) of mischmetal produced from wet rare earth chlorides	
Arsenic	1.534	0.683
Cadmium	0.250	0.110
*Chromium	0.323	0.132
Copper	1.395	0.734
*Lead	0.308	0.147
*Nickel	1.409	0.932
Selenium	0.903	0.404
Silver	0.301	0.125
Thallium	1.505	0.668
Zinc	1.072	0.448
*TSS	30.090	14.310
*pH	Within the range of 7.5 to 10.0 at all times	

*Regulated Pollutant

TABLE IX-2 (Continued)

BPT MASS LIMITATIONS FOR THE
PRIMARY RARE EARTH METALS SUBCATEGORY

(c) Electrolytic Cell Water Quench and Wet APC BPT

Pollutant or Pollutant Property	Maximum for Any One Day	Maximum for Monthly Average
	mg/kg (lb/million lbs) of total mischmetal produced	
Arsenic	26.510	11.790
Cadmium	4.312	1.902
*Chromium	5.580	2.283
Copper	24.100	12.680
*Lead	5.326	2.536
*Nickel	24.350	16.110
Selenium	15.600	6.975
Silver	5.200	2.156
Thallium	26.000	11.540
Zinc	18.520	7.736
*TSS	520.000	247.300
*pH	Within the range of 7.5 to 10.0 at all times	

(d) Electrolytic Cell Caustic Wet Air Pollution Control BPT

Pollutant or Pollutant Property	Maximum for Any One Day	Maximum for Monthly Average
	mg/kg (lb/million lbs) of total mischmetal produced	
Arsenic	0.000	0.000
Cadmium	0.000	0.000
*Chromium	0.000	0.000
Copper	0.000	0.000
*Lead	0.000	0.000
*Nickel	0.000	0.000
Selenium	0.000	0.000
Silver	0.000	0.000
Thallium	0.000	0.000
Zinc	0.000	0.000
*TSS	0.000	0.000
*pH	Within the range of 7.5 to 10.0 at all times	

*Regulated Pollutant

TABLE IX-2 (Continued)

BPT MASS LIMITATIONS FOR THE
PRIMARY RARE EARTH METALS SUBCATEGORY

(e) Sodium Hypochlorite Filter Backwash BPT

Pollutant or Pollutant Property	Maximum for Any One Day	Maximum for Monthly Average
mg/kg (lb/million lbs) of total mischmetal produced		
Arsenic	0.757	0.337
Cadmium	0.123	0.054
*Chromium	0.159	0.065
Copper	0.688	0.362
*Lead	0.152	0.072
*Nickel	0.695	0.460
Selenium	0.445	0.199
Silver	0.148	0.062
Thallium	0.742	0.329
Zinc	0.529	0.221
*TSS	14.840	7.059
*pH	Within the range of 7.5 to 10.0 at all times	

*Regulated Pollutant

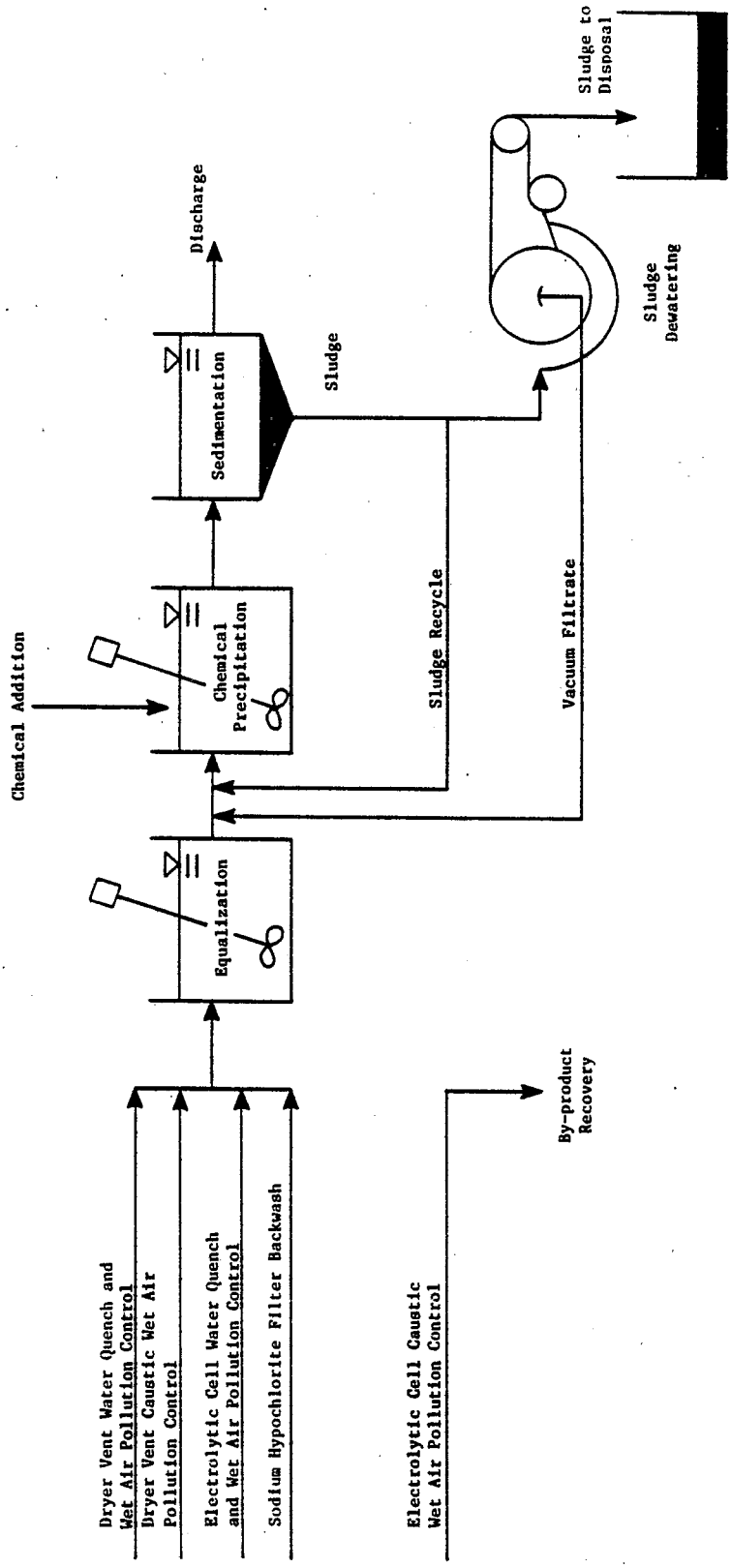

Figure IX-1

BPT TREATMENT SCHEME FOR THE PRIMARY RARE EARTH METALS SUBCATEGORY

THIS PAGE INTENTIONALLY LEFT BLANK

SECTION X

BEST AVAILABLE TECHNOLOGY ECONOMICALLY ACHIEVABLE

These effluent limitations are based on the best control and treatment technology used by a specific point source within the industrial category or subcategory, or by another category from which it is transferable. Emphasis is placed on additional treatment techniques applied at the end of the treatment systems currently used, as well as reduction of the amount of water used and discharged, process control, and treatment technology optimization.

The factors considered in assessing best available technology economically achievable (BAT) include the age of equipment and facilities involved, the process used process changes nonwater quality environmental impacts (including energy requirements), and the costs of application of such technology. BAT represents the best available technology at plants of various ages, sizes, processes, or other characteristics. BAT may be transferred from a different subcategory or category and may include feasible process changes or internal controls even when not in common industry practice.

The statutory assessment of BAT considers costs, but does not require a balancing of costs against pollutant removals. However in assessing the proposed and promulgated BAT the Agency has given substantial weight to the economic achievability of the selected technology.

TECHNICAL APPROACH TO BAT

The Agency reviewed a wide range of technology options and evaluated the available possibilities to ensure that the most effective and beneficial technologies were used as the basis of BAT. To accomplish this, the Agency elected to examine four technology options which could be applied to the primary rare earth metals subcategory as treatment options for the basis of BAT effluent limitations.

For the development of BAT effluent limitations, mass loadings were calculated for each wastewater source or subdivision in the subcategory using the same technical approach as described in Section IX for BPT limitations development. The differences in the mass loadings for BPT and BAT are due to increased treatment effectiveness achievable with the more sophisticated BAT treatment technology and reductions in the effluent flows achieved by recycle and reuse technologies.

The treatment technologies considered for BAT are summarized below:

Option A (Figure X-1, page 5499) is based on:

- Chemical precipitation and sedimentation

Option B (Figure X-2, page 5500) is based on:

- Chemical precipitation and sedimentation
- In-process flow reduction of quench water and scrubber liquor

Option C (Figure X-3, page 5501) is based on:

- Chemical precipitation and sedimentation
- In-process flow reduction of quench water and scrubber liquor
- Multimedia filtration

Option E (Figure X-4, page 5502) is based on:

- Chemical precipitation and sedimentation
- In-process flow reduction of quench water and scrubber liquor
- Multimedia filtration
- Activated carbon adsorption

The four options examined for BAT are discussed in greater detail on the following pages. The first option considered (Option A) is the same as the BPT treatment and control technology which was presented in the previous section. The last three options each represent substantial progress toward the reduction of pollutant discharges above and beyond the progress achievable by BPT.

OPTION A

Option A for the primary rare earth metals subcategory is equivalent to the control and treatment technologies which were analyzed for BPT in Section IX (see Figure X-1, page 5499). The BPT end-of-pipe treatment scheme includes chemical precipitation and sedimentation. The discharge rates for Option A are equal to the discharge rates allocated to each stream as a BPT discharge flow.

OPTION B

Option B for the primary rare earth metals subcategory achieves lower pollutant discharge by building upon the Option A end-of-pipe treatment technology. Flow reduction measures are added to the Option A treatment scheme, which consists of chemical precipitation and sedimentation. These flow reduction measures, including in-process changes, result in the concentration of pollutants in some wastewater streams. Treatment of a more concentrated effluent allows achievement of a greater net

pollutant removal and introduces the possible economic benefits associated with treating a lower volume of wastewater.

The method used in Option 5 to reduce process wastewater generation or discharge rates is recycle of water used in wet air pollution control. There are two wet air pollution control wastewater sources regulated under these effluent limitations for which recycle is considered feasible:

- o Dryer vent water quench and scrubber, and
- o Electrolytic cell water quench and scrubber.

Reduction of flow through recycle represents the best available technology economically achievable for these streams. Recycle of dryer vent scrubber water and electrolytic cell scrubber water is demonstrated by one plant in the primary rare earth metals subcategory. Therefore, the Agency believes that recycle for these two streams is feasible for other plants. Necessary treatment for recycled quench or scrubber water could include pH neutralization with sodium hydroxide solution; solids build up from flue dust would not be critical because of continuous blowdown and makeup. A holding tank for pH neutralization would also aid in water temperature equilibration to inhibit the need for cooling the recycled water.

OPTION C

Option C for the primary rare earth metals subcategory consists of all control and treatment requirements of Option B (flow reduction, chemical precipitation and sedimentation) plus multimedia filtration technology added at the end of the Option B treatment scheme (see Figure X-3, page 5501). Multimedia filtration is used to remove suspended solids, including precipitates of toxic metals, beyond the concentrations attainable by gravity sedimentation. The filter suggested is of the gravity, mixed media type, although other forms of filters, such as rapid sand filters or pressure filters, would perform satisfactorily.

OPTION E

Option E for the primary rare earth metals subcategory consists of all the control and treatment requirements of Option C (flow reduction, chemical precipitation, sedimentation, and multimedia filtration) with the addition of granular activated carbon technology at the end of the Option C treatment scheme (see Figure X-4, page 5502). The activated carbon process is provided to control the discharge of hexachlorobenzene and other toxic organic pollutants.

POLLUTANT REMOVAL ESTIMATES

As one means of evaluating each technology option, EPA developed estimates of the pollutant removals and the compliance costs associated with each option. The methodologies are described

below.

A description of the methodology used to calculate the estimated pollutant removal achieved by the application of the various treatment options is presented in Section X of Vol. I. The pollutant removal estimates have been revised from proposal because of additional waste streams and new production normalized flows are used for promulgation. The methodology for calculating pollutant removals has not changed, and the data used for estimating removals are the same as those used to revise compliance costs.

Sampling data collected during the field sampling program were used to characterize the major waste streams considered for regulation. At each sampled facility, the sampling data were production normalized for each unit operation (i.e., mass of pollutant generated per mass of product manufactured). This value, referred to as the raw waste, was used to estimate the mass of toxic pollutants generated within the primary rare earth metals subcategory. The pollutant removal estimates were calculated for each plant by first estimating the total mass of each pollutant in the untreated wastewater. This was calculated by first multiplying the raw waste values by the corresponding production value for that stream and then summing these values for each pollutant for every stream generated by the plant.

Next, the volume of wastewater discharged after the application of each treatment option was estimated for each operation at each plant by comparing the actual discharge to the regulatory flow. The smaller of the two values was selected and summed with the other plant flows. The mass of pollutant discharged was then estimated by multiplying the achievable concentration values attainable with the option (mg/l) by the estimated volume of process wastewater discharged by the subcategory. The mass of pollutant removed is the difference between the estimated mass of pollutant generated by each plant in the subcategory and the mass of pollutant discharged after application of the treatment option. The pollutant removal estimates for all dischargers in the primary rare earth metals subcategory are presented in Table X-1 (page 5493).

COMPLIANCE COSTS

In estimating subcategory-wide compliance costs, the first step was to develop a cost estimation model, relating the total costs associated with installation and operation of wastewater treatment technologies to plant process wastewater discharge. EPA applied the model to each plant. The plant's investment and operating costs are determined by what treatment it has in place and by its individual process wastewater discharge flow. As discussed above, this flow is either the actual or the BAT regulatory flow, whichever is lesser. The final step was to annualize the capital costs, and to sum the annualized capital costs, and the operating and maintenance costs for each plant, yielding the cost of compliance for the subcategory. A

comparison of the costs developed for proposal and the revised costs for promulgation are presented in Table X-2 (page 5494) for all dischargers in the primary rare earth metals subcategory. Compliance costs for direct and indirect dischargers are shown in combined because some of the data on which this table is based are claimed to be confidential.

BAT OPTION SELECTION - PROPOSAL

EPA selected Option E for the proposed BAT which includes in-process flow reduction, chemical precipitation, sedimentation, and multimedia filtration, followed by activated carbon technology to remove treatable concentrations of hexachlorobenzene.

The estimated capital cost of proposed BAT was $101,200 (1982 dollars) and the annual cost was $46,410 (1982 dollars). Implementation of the proposed BAT technology was estimated to remove 18.3 kilograms of priority pollutants (14.9 kilograms of priority organics and 3.4 kilograms of priority metals) and 198 kilograms of suspended solids over the estimated BPT removal.

BAT OPTION SELECTION - PROMULGATION

After proposal, EPA received comments reporting a waste stream that had not been included in the proposed regulations. In addition, wastewater flow rates and production data were obtained for several streams and used to calculate new production normalized flow rates and regulatory flow allowances. These data were also used for recalculating pollutant removal estimates and for revising compliance costs.

EPA is promulgating BAT limitations for this subcategory based on Option E, in-process flow reduction, chemical precipitation, sedimentation, and multimedia filtration followed by activated carbon technology for control of toxic organics. The technology basis for promulgated BAT limitations is the same as that for the proposed limitations. In addition, the treatment effectiveness concentrations, upon which the mass limitations are based, are equal to values used to calculate the proposed limitations.

EPA is promulgating multimedia filtration as part of the BAT technology because it results in additional removal of toxic metals. Support for promulgating this type of treatment technology comes from presently demonstrated applications of multimedia filtration by 25 plants in the nonferrous metals manufacturing category. Filtration adds reliability to the treatment system by making it less susceptible to operator error and to sudden changes in raw wastewater flow and concentrations.

Activated carbon end-of-pipe treatment was selected to control discharges of hexachlorobenzene from the electrolytic reduction cell quench wastewater. The Agency selected this treatment technology because discharges of this toxic organic pollutant cannot be effectively controlled by more conventional treatment

technologies promulgated for BAT. Although activated carbon is not demonstrated in this or any other application within the nonferrous metals manufacturing category, EPA believes that performance data from the iron and steel manufacturing category provide a valid measure of this technology's performance on nonferrous metals manufacturing category wastewater.

WASTEWATER DISCHARGE RATES

A BAT discharge rate was calculated for each subdivision based upon the flows of the existing plants, as determined from analysis of data collection portfolios. The discharge rate is used with the pollutant concentration achievable by treatment to determine BAT effluent limitations. Since the discharge rate may be different for each wastewater source, separate production normalized discharge rates for each of the five wastewater sources were determined and are summarized in Table X-3 (page 5495). The discharge rates are normalized on a production basis by relating the amount of wastewater generated to the mass of the product which is processed through the process associated with the waste stream in question. These production normalizing parameters (PNP) are also listed in Table X-3.

The BAT discharge rates reflect the flow reduction requirements of the selected BAT option. For this reason, the two water quench and scrubber wastewaters which were targeted for flow reduction through recycle for BAT have lower flow rates than the corresponding BPT flows. A discussion of these wastewaters is presented below.

DRYER VENT WATER QUENCH AND SCRUBBER

The BAT wastewater discharge allowance for dryer vent water quench and scrubber wastewater is 4,173 l/kkg (1,000 gal/ton) of mischmetal produced from wet rare earth chlorides. All of the rare earth metal plants producing mischmetal incorporate this operation. One plant presently recycles the scrubber liquor. Other plants do not presently practice recycle. The BAT wastewater discharge rate is based on the discharge rate of the plant practicing recycle. EPA has determined that this rate is economically achievable using the best available technology. The water use and discharge rates for this subdivision are shown in Table V-1 (page 5395).

ELECTROLYTIC CELL WATER QUENCH AND SCRUBBER

The BAT wastewater discharge allowance for electrolytic cell water quench and scrubber is 9,390 l/kkg (2,250 gal/ton) of total mischmetal produced. All of the rare earth metals plants producing mischmetal incorporate this operation. One plant presently practices 96 percent recycle while other plants do not recycle. The BAT wastewater discharge rate is based on the discharge rate of the plant practicing recycle. EPA has determined that this rate is economically achievable using the best available technology.

REGULATED POLLUTANT PARAMETERS

In the development of this regulation the Agency placed particular emphasis on the toxic pollutants. The raw wastewater concentrations from individual operations and the subcategory as a whole were examined to select certain pollutants and pollutant parameters for limitation. This examination and evaluation was presented in Section VI. The Agency, however, has chosen not to regulate all 12 toxic pollutants selected in this analysis.

The primary rare earth metals subcategory generates only two toxic organic pollutants in concentrations that the Agency considers likely to cause toxic effects, benzene and hexachlorobenzene. There are also trace quantities of other organic compounds present in wastewater of this subcategory. Because of the high cost associated with analysis for toxic organic pollutants, EPA is promulgating effluent limitations only for those pollutants generated in the greatest quantities as shown by the pollutant removal analysis. Thus, hexachlorobenzene is the only toxic organic pollutant selected for specific limitation.

By regulating only hexachlorobenzene, the toxic organic pollutant found in greatest concentration in raw wastewater, the Agency believes that the concentration of benzene will be effectively controlled by the technology needed to limit the discharge of hexachlorobenzene. In addition, the levels of benzene detected in raw wastewater from the primary rare earth metals industry are significantly lower than those for hexachlorobenzene. Therefore, removal of benzene will not adversely impact the performance of the activated carbon technology implemented to control hexachlorobenzene.

The high cost associated with analysis for toxic metal pollutants has prompted EPA to develop an alternative method for regulating and monitoring toxic pollutant discharges from the nonferrous metals manufacturing category. Rather than developing specific effluent limitations and standards for each of the toxic metals found in treatable concentrations in the raw wastewater from a given subcategory, the Agency is promulgating effluent limitations only for those pollutants generated in the greatest quantities as shown by the pollutant removal analysis. The pollutants selected for specific limitation are listed below:

119. chromium (Total)
122. lead
124. nickel

By establishing limitations and standards for certain toxic metal pollutants, discharges will attain the same degree of control over toxic metal pollutants as they would have been required to achieve had all the toxic metal pollutants been directly limited.

This approach is technically justified since the achievable

concentrations used for chemical precipitation and sedimentation technology are based on optimized treatment for concomitant multiple metals removal. Thus, even though metals have somewhat different theoretical solubilities, they will be removed at very nearly the same rate in a chemical precipitation and sedimentation treatment system operated for multiple metals removal. Filtration, as part of the technology basis, is likewise justified because this technology removes metals nonpreferentially.

The toxic pollutants selected for specific limitation in the primary rare earth metals subcategory to control the discharges of toxic pollutants are hexachlorobenzene, lead, chromium, and nickel. The following toxic pollutants are excluded from limitation on the basis that they are effectively controlled by the limitation developed for hexachlorobenzene, lead, chromium, and nickel:

4. benzene
115. arsenic
118. cadmium
120. copper
125. selenium
126. silver
127. thallium
128. zinc

EFFLUENT LIMITATIONS

The concentrations achievable by application of BAT are discussed in Section VII of this supplement. The achievable concentrations, both one day maximum and monthly average values, are multiplied by the BAT normalized discharge flows summarized in Table X-3 (page 5495) to calculate the mass of pollutants allowed to be discharged per mass of product. The results of these calculations in milligrams of pollutant per kilogram of product represent the BAT effluent limitations and are presented in Table X-4 (page 5496) for each wastewater stream.

TABLE X-1

POLLUTANT REMOVAL ESTIMATES FOR DIRECT DISCHARGERS
PRIMARY RARE EARTH METALS SUBCATEGORY

These removals are not presented here because the data on which they are based have been claimed to be confidential.

TABLE X-2

COST OF COMPLIANCE FOR THE
PRIMARY RARE EARTH METALS SUBCATEGORY DIRECT DISCHARGERS

These costs are not presented here because the data on which they are based have been claimed to be confidential.

Table X-3

BAT WASTEWATER DISCHARGE RATES FOR THE PRIMARY RARE EARTH METALS SUBCATEGORY

Wastewater Stream	BAT Normalized Discharge Rate		Production Normalizing Parameter
	l/kkg	gal/ton	
Dryer Vent Water Quench and Scrubber	4,173	1,000	Mischmetal produced from wet rare earth chlorides
Dryer Vent Caustic Wet Air Pollution Control	734	176	Mischmetal produced from wet rare earth chlorides
Electrolytic Cell Water Quench and Scrubber	9,390	2,250	Total mischmetal produced
Electrolytic Cell Caustic Wet Air Pollution Control	0	0	Total mischmetal produced
Sodium Hypochlorite Filter Backwash	362	87	Total mischmetal produced

TABLE X-4

BAT MASS LIMITATIONS FOR THE
PRIMARY RARE EARTH METALS SUBCATEGORY

(a) Dryer Vent Water Quench and Wet Air Pollution Control BAT

Pollutant or Pollutant Property	Maximum for Any One Day	Maximum for Monthly Average
	mg/kg (lb/million lbs) of mischmetal produced from wet rare earth chlorides	
Benzene	0.042	0.042
*Hexachlorobenzene	0.042	0.042
Arsenic	5.800	2.587
Cadmium	0.835	0.334
*Chromium	1.544	0.626
Copper	5.341	2.546
*Lead	1.168	0.542
*Nickel	2.295	1.544
Selenium	3.422	1.544
Silver	1.210	0.501
Thallium	5.842	2.546
Zinc	4.256	1.753

(b) Dryer Vent Caustic Wet Air Pollution Control BAT

Pollutant or Pollutant Property	Maximum for Any One Day	Maximum for Monthly Average
	mg/kg (lb/million lbs) of mischmetal produced from wet rare earth chlorides	
Benzene	0.007	0.007
*Hexachlorobenzene	0.007	0.007
Arsenic	1.020	0.455
Cadmium	0.147	0.059
*Chromium	0.272	0.110
Copper	0.940	0.448
*Lead	0.206	0.095
*Nickel	0.404	0.272
Selenium	0.602	0.272
Silver	0.213	0.088
Thallium	1.028	0.448
Zinc	0.749	0.308

*Regulated Pollutant

TABLE X-4 (Continued)

BAT MASS LIMITATIONS FOR THE
PRIMARY RARE EARTH METALS SUBCATEGORY

(c) Electrolytic Cell Water Quench and Wet APC BAT

Pollutant or Pollutant Property	Maximum for Any One Day	Maximum for Monthly Average
mg/kg (lb/million lbs) of total mischmetal produced		
Benzene	0.094	0.094
*Hexachlorobenzene	0.094	0.094
Arsenic	13.050	5.822
Cadmium	1.878	0.751
*Chromium	3.474	1.409
Copper	12.020	5.728
*Lead	2.629	1.221
*Nickel	5.165	3.474
Selenium	7.700	3.474
Silver	2.723	1.127
Thallium	13.150	5.728
Zinc	9.578	3.944

(d) Electrolytic Cell Caustic Wet Air Pollution Control BAT

Pollutant or Pollutant Property	Maximum for Any One Day	Maximum for Monthly Average
mg/kg (lb/million lbs) of total mischmetal produced		
Benzene	0.000	0.000
*Hexachlorobenzene	0.000	0.000
Arsenic	0.000	0.000
Cadmium	0.000	0.000
*Chromium	0.000	0.000
Copper	0.000	0.000
*Lead	0.000	0.000
*Nickel	0.000	0.000
Selenium	0.000	0.000
Silver	0.000	0.000
Thallium	0.000	0.000
Zinc	0.000	0.000

*Regulated Pollutant

TABLE X-4 (Continued)

BAT MASS LIMITATIONS FOR THE
PRIMARY RARE EARTH METALS SUBCATEGORY

(e) Sodium Hypochlorite Filter Backwash BAT

Pollutant or Pollutant Property	Maximum for Any One Day	Maximum for Monthly Average
mg/kg (lb/million lbs) of total mischmetal produced		
Benzene	0.004	0.004
*Hexachlorobenzene	0.004	0.004
Arsenic	0.503	0.224
Cadmium	0.072	0.029
*Chromium	0.134	0.054
Copper	0.463	0.221
*Lead	0.101	0.047
*Nickel	0.199	0.134
Selenium	0.297	0.134
Silver	0.105	0.043
Thallium	0.507	0.221
Zinc	0.369	0.152

*Regulated Pollutant

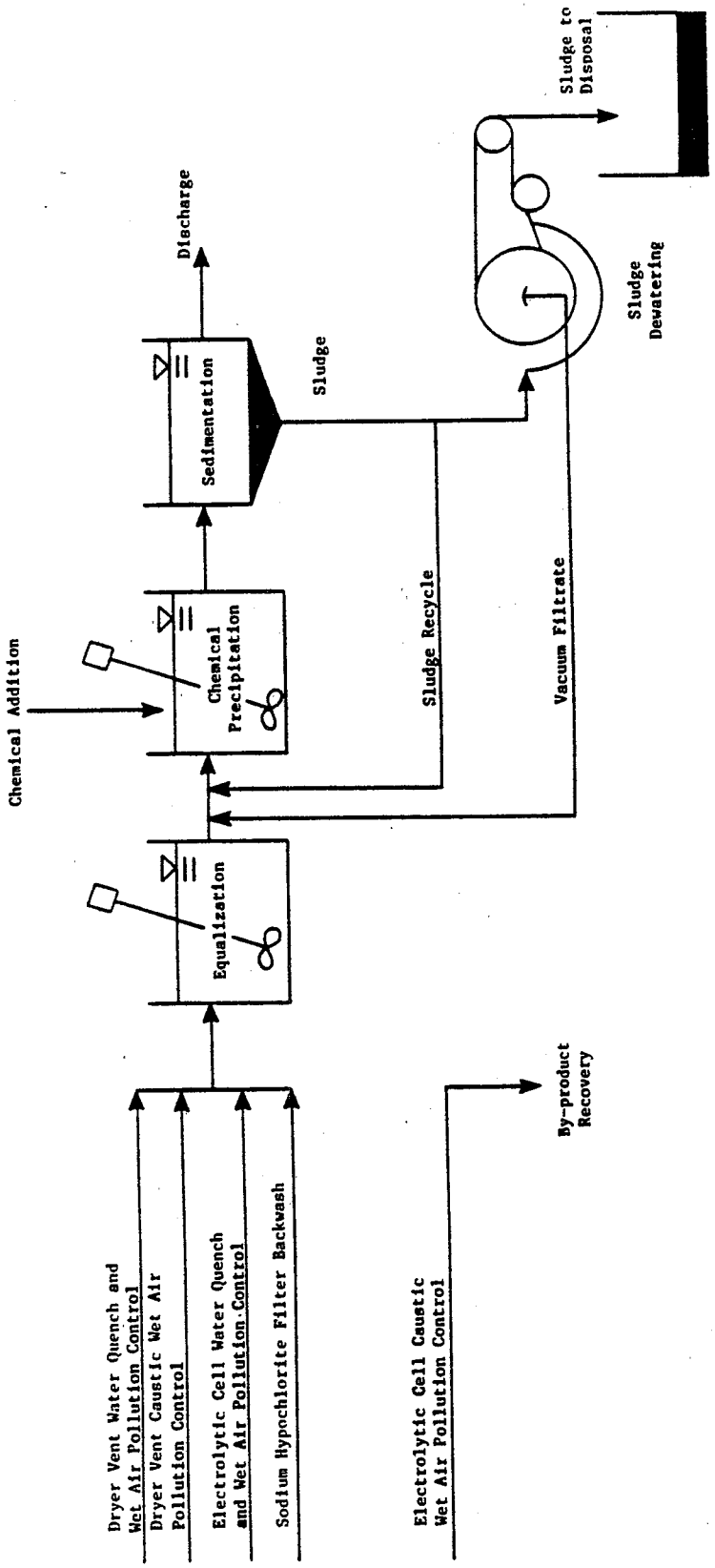

Figure X-1

BAT TREATMENT SCHEME FOR OPTION A

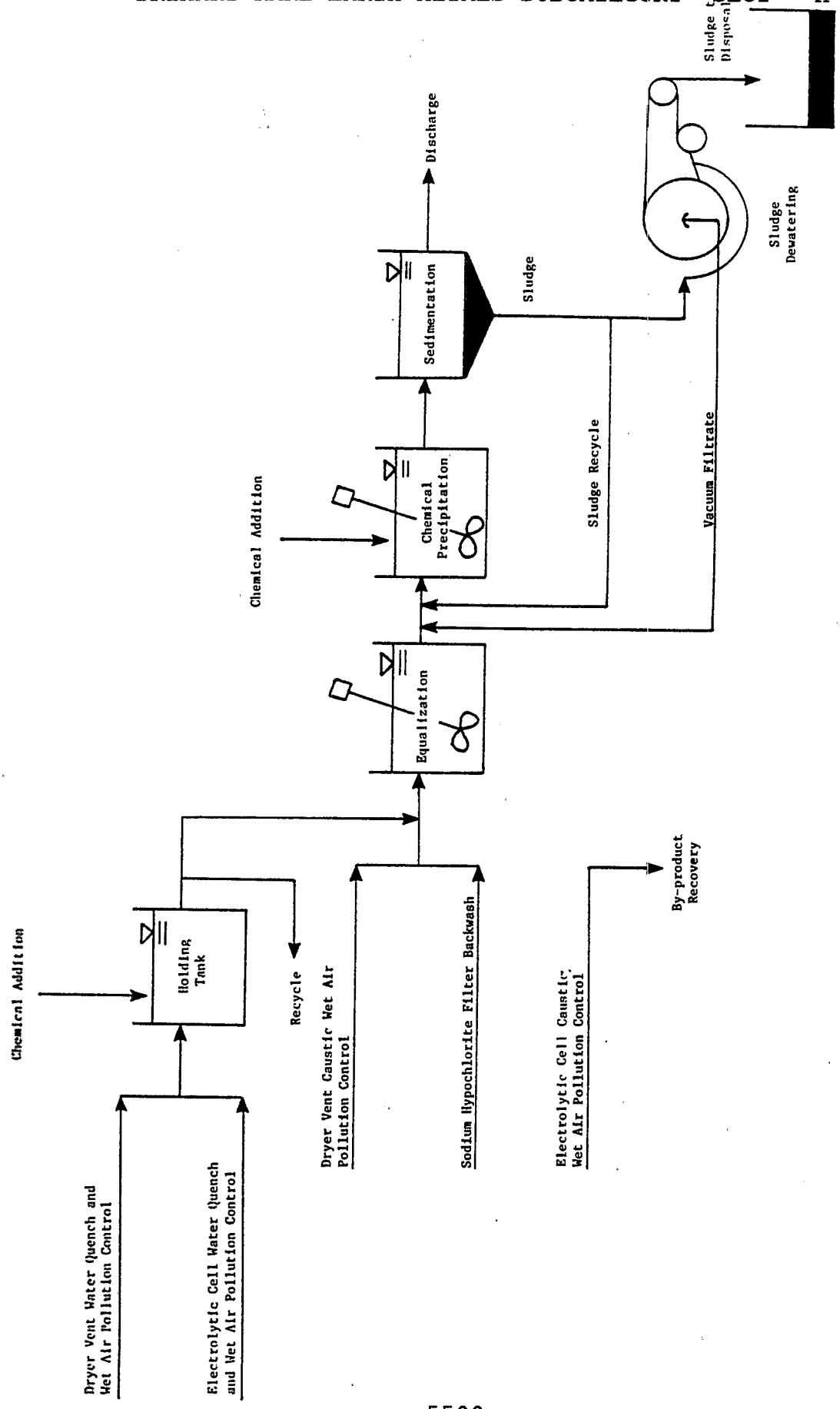

Figure X-2

BAT TREATMENT SCHEME FOR OPTION B

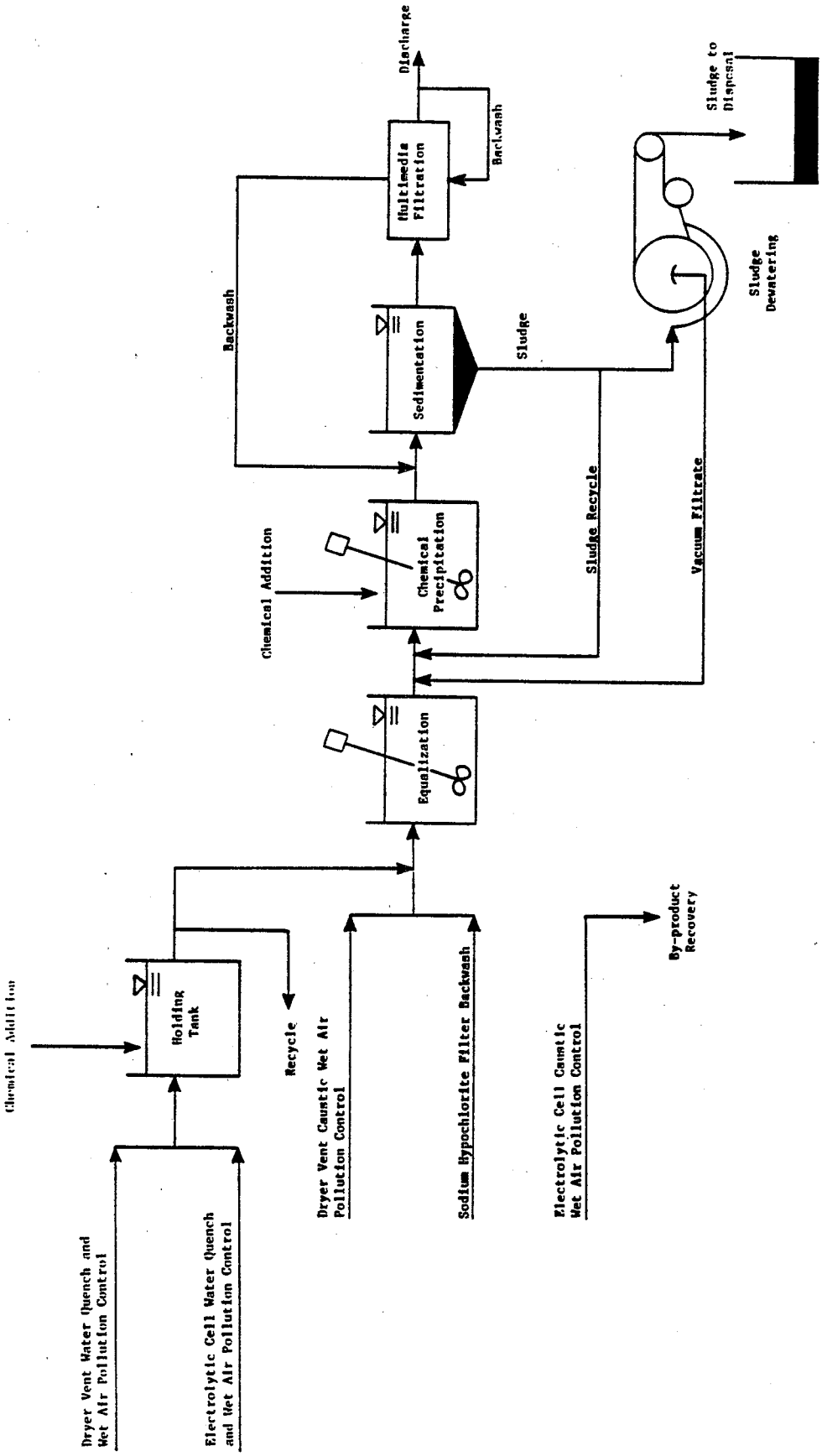

Figure X-3

BAT TREATMENT SCHEME FOR OPTION C

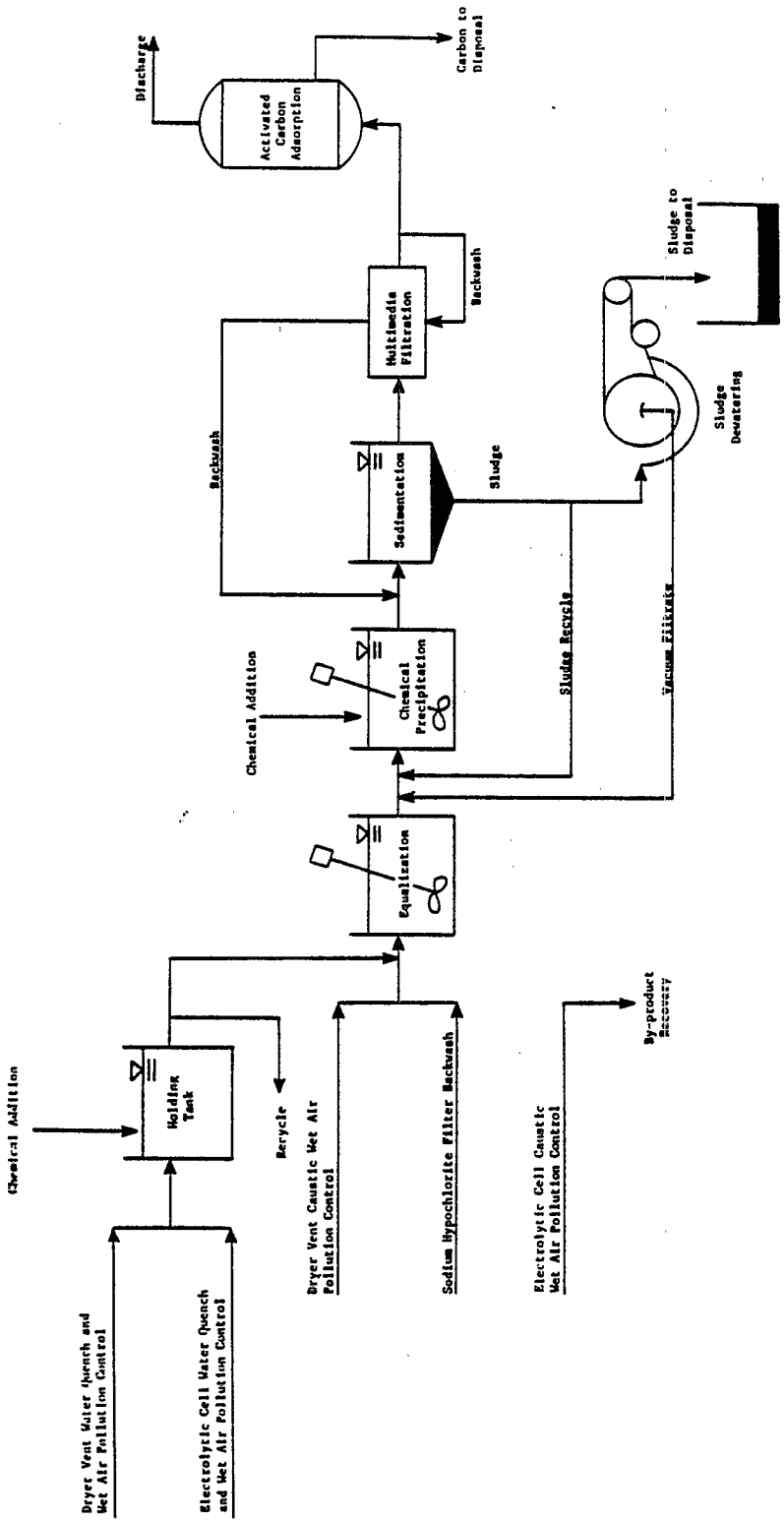

Figure X-4

BAT TREATMENT SCHEME FOR OPTION E

SECTION XI

NEW SOURCE PERFORMANCE STANDARDS

This section describes the technologies for treatment of wastewater from new sources and presents mass discharge standards for regulated pollutants for NSPS in the primary rare earth metals subcategory, based on the selected treatment technology. The basis for new source performance standards (NSPS) is the best available demonstrated technology (BDT). New plants have the opportunity to design the best and most efficient production processes and wastewater treatment technologies without facing the added costs and restrictions encountered in retrofitting an existing plant. Therefore, EPA has considered the best demonstrated process changes, in-plant controls, and end-of-pipe treatment technologies which reduce pollution to the maximum extent feasible.

TECHNICAL APPROACH TO NSPS

New source performance standards are equivalent to the best available technology (BAT) selected for currently existing primary rare earth metals plants. This result is a consequence of careful review by the Agency of a wide range of technical options for new source treatment systems which is discussed in Section XI of the General Development Document. Additionally, there was nothing found to indicate that the wastewater flows and characteristics of new plants would not be similar to those from existing plants, since the processes used by new sources are not expected to differ from those used at existing sources. Consequently, BAT production normalized discharge rates, which are based on the best existing practices of the subcategory, can also be applied to new sources. These rates are presented in Table XI-1 (page 5506).

Treatment technologies considered for the NSPS options are identical to the treatment technologies considered for the BAT options. These options are:

Option A

- Chemical precipitation and sedimentation

Option B

- Chemical precipitation and sedimentation
- In-process flow reduction of quench water and scrubber liquor

Option C

- Chemical precipitation and sedimentation
- In-process flow reduction of quench water and scrubber liquor
- Multimedia filtration

Option E

- Chemical precipitation and sedimentation
- In-process flow reduction of quench water and scrubber liquor
- Multimedia filtration
- Activated carbon adsorption

NSPS OPTION SELECTION - PROPOSAL

EPA proposed that the best available demonstrated technology for the primary rare earth metals subcategory be equivalent to Option E (in-process flow reduction, chemical precipitation, sedimentation, multimedia filtration, and activated carbon adsorption).

The wastewater flow rates for NSPS were the same as the proposed BAT flow rates. Flow reduction measures for NSPS were not considered feasible because it was believed that no new demonstrated technologies existed within the subcategory that improved on water use and discharge practices. Therefore, EPA concluded that flow reduction beyond the allowances proposed for BAT was unachievable, and NSPS flow rates should be equal to those for BAT.

NSPS OPTION SELECTION - PROMULGATION

EPA is promulgating best available demonstrated technology for the primary rare earth metals subcategory equivalent to Option E (chemical precipitation, sedimentation, flow reduction, multimedia filtration, and activated carbon adsorption). Filtration is demonstrated by 25 plants in the nonferrous metals manufacturing category. Activated carbon adsorption technology is promulgated to control the discharge of hexachlorobenzene.

The wastewater flow rates for NSPS are the same as the BAT flow rates. Further flow reduction measures for NSPS are not feasible, because dry scrubbing is not demonstrated for controlling emissions from dehydration furnaces and electrolytic reduction operations. The nature of these emissions (acid fumes, hot particulate matter) technically precludes the use of dry scrubbers. Therefore, EPA is including an allowance from this source at NSPS equivalent to that promulgated for BAT. EPA also does not believe that new plants could achieve any additional flow reduction beyond the quench water and scrubber effluent recycle promulgated for BAT.

REGULATED POLLUTANT PARAMETERS

The Agency has no reason to believe that the pollutants that will be found in treatable concentrations in processes within new sources will be any different than with existing sources. Accordingly, pollutants and pollutant parameters selected for limitation under NSPS, in accordance with the rationale of Sections VI and X, are identical to those selected for BAT. The conventional pollutant parameters TSS and pH are also selected for limitation.

NEW SOURCE PERFORMANCE STANDARDS

The NSPS discharge flows for each wastewater source are the same as the discharge rates for BAT and are shown in Table XI-1 (page 5506). The mass of pollutant allowed to be discharged per mass of product is based on the product of the appropriate treatable concentration (mg/l) and the production normalized wastewater discharge flows (l/kkg). The results of these calculations are the production-based new source performance standards. These standards are presented in Table XI-2 (page 5507).

Table XI-1

NSPS WASTEWATER DISCHARGE RATES FOR THE PRIMARY RARE EARTH METALS SUBCATEGORY

Wastewater Stream	NSPS Normalized Discharge Rate l/kkg	NSPS Normalized Discharge Rate gal/ton	Production Normalizing Parameter
Dryer Vent Water Quench and Scrubber	4,173	1,000	Mischmetal produced from wet rare earth chlorides
Dryer Vent Caustic Wet Air Pollution Control	734	176	Mischmetal produced from wet rare earth chlorides
Electrolytic Cell Water Quench and Scrubber	9,390	2,250	Total mischmetal produced
Electrolytic Cell Caustic Wet Air Pollution Control	0	0	Total mischmetal produced
Sodium Hypochlorite Filter Backwash	362	87	Total mischmetal produced

TABLE XI-2

NSPS FOR THE PRIMARY RARE EARTH METALS SUBCATEGORY

(a) Dryer Vent Water Quench and Wet Air Pollution Control NSPS

Pollutant or Pollutant Property	Maximum for Any One Day	Maximum for Monthly Average
	mg/kg (lb/million lbs) of mischmetal produced from wet rare earth chlorides	
Benzene	0.042	0.042
*Hexachlorobenzene	0.042	0.042
Arsenic	5.800	2.587
Cadmium	0.835	0.334
*Chromium	1.544	0.626
Copper	5.341	2.546
*Lead	1.168	0.542
*Nickel	2.295	1.544
Selenium	3.422	1.544
Silver	1.210	0.501
Thallium	5.842	2.546
Zinc	4.256	1.753
*TSS	62.600	50.080
*pH	Within the range of 7.5 to 10.0 at all times	

(b) Dryer Vent Caustic Wet Air Pollution Control NSPS

Pollutant or Pollutant Property	Maximum for Any One Day	Maximum for Monthly Average
	mg/kg (lb/million lbs) of mischmetal produced from wet rare earth chlorides	
Benzene	0.007	0.007
*Hexachlorobenzene	0.007	0.007
Arsenic	1.020	0.455
Cadmium	0.147	0.059
*Chromium	0.272	0.110
Copper	0.940	0.448
*Lead	0.206	0.095
*Nickel	0.404	0.272
Selenium	0.602	0.272
Silver	0.213	0.088
Thallium	1.028	0.448
Zinc	0.749	0.308
*TSS	11.010	8.808
*pH	Within the range of 7.5 to 10.0 at all times	

*Regulated Pollutant

TABLE XI-2 (Continued)

NSPS FOR THE PRIMARY RARE EARTH METALS SUBCATEGORY

(c) Electrolytic Cell Water Quench and Wet APC NSPS

Pollutant or Pollutant Property	Maximum for Any One Day	Maximum for Monthly Average
mg/kg (lb/million lbs) of total mischmetal produced		
Benzene	0.094	0.094
*Hexachlorobenzene	0.094	0.094
Arsenic	13.050	5.822
Cadmium	1.878	0.751
*Chromium	3.474	1.409
Copper	12.020	5.728
*Lead	2.629	1.221
*Nickel	5.165	3.474
Selenium	7.700	3.474
Silver	2.723	1.127
Thallium	13.150	5.728
Zinc	9.578	3.944
*TSS	140.900	112.700
*pH	Within the range of 7.5 to 10.0 at all times	

(d) Electrolytic Cell Caustic Wet Air Pollution Control NSPS

Pollutant or Pollutant Property	Maximum for Any One Day	Maximum for Monthly Average
mg/kg (lb/million lbs) of total mischmetal produced		
Benzene	0.000	0.000
*Hexachlorobenzene	0.000	0.000
Arsenic	0.000	0.000
Cadmium	0.000	0.000
*Chromium	0.000	0.000
Copper	0.000	0.000
*Lead	0.000	0.000
*Nickel	0.000	0.000
Selenium	0.000	0.000
Silver	0.000	0.000
Thallium	0.000	0.000
Zinc	0.000	0.000
*TSS	0.000	0.000
*pH	Within the range of 7.5 to 10.0 at all times	

*Regulated Pollutant

TABLE XI-2 (Continued)

NSPS FOR THE PRIMARY RARE EARTH METALS SUBCATEGORY

(e) Sodium Hypochlorite Filter Backwash NSPS

Pollutant or Pollutant Property	Maximum for Any One Day	Maximum for Monthly Average
mg/kg (lb/million lbs) of total mischmetal produced		
Benzene	0.004	0.004
*Hexachlorobenzene	0.004	0.004
Arsenic	0.503	0.224
Cadmium	0.072	0.029
*Chromium	0.134	0.054
Copper	0.463	0.221
*Lead	0.101	0.047
*Nickel	0.199	0.134
Selenium	0.297	0.134
Silver	0.105	0.043
Thallium	0.507	0.221
Zinc	0.369	0.152
*TSS	5.430	4.344
*pH	Within the range of 7.5 to 10.0 at all times	

*Regulated Pollutant

THIS PAGE INTENTIONALLY LEFT BLANK

SECTION XII

PRETREATMENT STANDARDS

PSES are designed to prevent the discharge of pollutants which pass through interfere with or are otherwise incompatible with the operation of publicly owned treatment works (POTW). The Clean Water Act requires pretreatment for pollutants, such as toxic metals, that limit POTW sludge management alternatives. New indirect discharge facilities, like new direct discharge facilities, have the opportunity to incorporate the best available demonstrated technologies, including process changes, in-plant controls, and end-of-pipe treatment technologies, and to use plant site selection to ensure adequate treatment system function. Pretreatment standards are to be technology based, analogous to the best available or best demonstrated technology for removal of toxic pollutants.

This section describes the control and treatment technologies for pretreatment of process wastewaters from existing sources and new sources in the primary rare earth metals subcategory. Pretreatment standards for regulated pollutants are presented based on the selected control and treatment technology.

TECHNICAL APPROACH TO PRETREATMENT

Before proposing and promulgating pretreatment standards, the Agency examines whether the pollutants discharged by the industry pass through the POTW or interfere with the POTW operation or its chosen sludge disposal practices. In determining whether pollutants pass through a well-operated POTW achieving secondary treatment, the Agency compares the percentage of a pollutant removed by POTW with the percentage removed by direct dischargers applying the best available technology economically achievable. A pollutant is deemed to pass through the POTW when the average percentage removed nationwide by well-operated POTW meeting secondary treatment requirements, is less than the percentage removed by direct dischargers complying with BAT effluent limitations guidelines for that pollutant.

This definition of pass through satisfies the two competing objectives set by Congress that standards for indirect dischargers be equivalent to standards for direct dischargers while at the same time the treatment capability and performance of the POTW be recognized and taken into account in regulating the discharge of pollutants from indirect dischargers.

The Agency compares percentage removal rather than the mass or concentration of pollutants discharged because the latter would not take into account the mass of pollutants discharged to the POTW from non-industrial sources or the dilution of the pollutants in the POTW effluent to lower concentrations due to the addition of large amounts of non-industrial wastewater.

INDUSTRY COST AND POLLUTANT REMOVAL ESTIMATES

The industry cost and pollutant removal estimates of each treatment option were used to determine the most cost-effective option. These estimates have been revised since proposal because of additional wastewater streams and new production normalized flows used for promulgation. The methodology applied in calculating pollutant removal estimates and plant compliance costs is discussed in Section X.

PRETREATMENT STANDARDS FOR EXISTING AND NEW SOURCES

Options for pretreatment of wastewaters from both existing and new sources are based on increasing the effectiveness of end-of-pipe treatment technologies. All in-plant changes and applicable end-of-pipe treatment processes have been discussed previously in Sections X and XI. The options for PSNS and PSES, therefore, are the same as the BAT options discussed in Section X.

A description of each option is presented in Section X, while a more detailed discussion, including pollutants controlled by each treatment process is presented in Section VII of Vol. I.

PSNS AND PSES OPTION SELECTION - PROPOSAL

EPA proposed that the pretreatment standards technology base for the primary rare earth metals subcategory be equivalent to Option E (in-process flow reduction, chemical precipitation, sedimentation, multimedia filtration, and activated carbon adsorption).

The wastewater discharge rates for both PSNS and PSES were equivalent to the proposed BAT discharge rates. No flow reduction measures for PSNS or PSES were considered feasible beyond the recycle proposed for BAT.

PSES OPTION SELECTION - PROMULGATION

The technology basis for promulgated PSES is Option E, in-process flow reduction, chemical precipitation, sedimentation, multimedia filtration, and activated carbon adsorption technology to remove metals, solids, and organics from combined wastewaters and to control pH. The basis of this selection is that it achieves effective removal of toxic pollutants without resulting in negative impacts on the cost of new facilities. Filtration is demonstrated by 25 plants in the nonferrous metals manufacturing category, and will not result in adverse economic impacts. Activated carbon adsorption technology is necessary to control the discharge of hexachlorobenzene.

Table XII-1 (page 5514)shows the estimated pollutant removals for indirect dischargers at promulgation. Compliance costs for indirect dischargers at promulgation are presented in Table XII-2 (page 5515).

PSNS OPTION SELECTION - PROMULGATION

Option E (in-process flow reduction, chemical precipitation, sedimentation, multimedia filtration, and activated carbon adsorption) has been selected by the Agency as the treatment technology for the basis of promulgated pretreatment standards for new sources. The basis of this selection is that it achieves effective removal of priority pollutants without resulting in negative impacts on the cost of new facilities. The wastewater discharge rates for promulgated PSNS are identical to the promulgated BAT discharge rates for each waste stream. The PSNS discharge rates are shown in Table XII-3 (page 5516).

REGULATED POLLUTANT PARAMETERS

Pollutants selected for limitation, in accordance with the rationale of Sections VI and X, are identical to those selected for limitation for BAT. It is necessary to promulgate PSES and PSNS to prevent the pass-through of hexachlorobenzene, chromium, lead, and nickel, which are the limited pollutants. These toxic pollutants are removed by a well-operated POTW achieving secondary treatment at an average of 28 percent while BAT technology removes approximately 74 percent.

PRETREATMENT STANDARDS

Pretreatment standards are based on the treatable concentrations from the selected treatment technology (Option E) and the discharge rates determined in Section X for BAT. A mass of pollutant per mass of product (mg/kg) allocation is given for each subdivision within the subcategory. This pollutant allocation is based on the product of the treatable concentration from the promulgated treatment (mg/l) and the production normalized wastewater discharge rate (l/kkg). The achievable treatment concentrations for BAT are identical to those for PSES and PSNS. PSES and PSNS are presented in Tables XII-4 and XII-5 (pages 5517 and 5520).

Table XII-1

POLLUTANT REMOVAL ESTIMATES FOR INDIRECT DISCHARGERS
PRIMARY RARE EARTH METALS SUBCATEGORY

Pollutant	Raw Waste (kg/yr)	Option A Discharge (kg/yr)	Option A Removed (kg/yr)	Option B Discharge (kg/yr)	Option B Removed (kg/yr)	Option C Discharge (kg/yr)	Option C Removed (kg/yr)	Option E Discharge (kg/yr)	Option E Removed (kg/yr)
Antimony	0.0168	0.0168	0	0.0168	0	0.0168	0	0.0168	0
Arsenic	0.1008	0.1008	0	0.1008	0	0.1008	0	0.1008	0
Cadmium	0.0392	0.0392	0	0.0392	0	0.0392	0	0.0392	0
Chromium (Total)	0.1399	0.1399	0	0.1399	0	0.1399	0	0.1399	0
Copper	0.1455	0.1455	0	0.1455	0	0.1455	0	0.1455	0
Cyanide (Total)	0.0448	0.0448	0	0.0448	0	0.0448	0	0.0448	0
Lead	1.3659	0.6717	0.6941	0.4601	0.9058	0.3067	1.0592	0.3067	1.0592
Mercury	0.0056	0.0056	0	0.0056	0	0.0056	0	0.0056	0
Nickel	0.3862	0.3862	0	0.3862	0	0.3862	0	0.3862	0
Selenium	0.0896	0.0896	0	0.0896	0	0.0896	0	0.0896	0
Silver	0.0336	0.0336	0	0.0336	0	0.0336	0	0.0336	0
Thallium	0.0840	0.0840	0	0.0840	0	0.0840	0	0.0840	0
Zinc	0.5710	0.5710	0	0.5710	0	0.5710	0	0.5710	0
TOTAL PRIORITY METALS	3.0228	2.3287	0.6941	2.1170	0.9058	1.9636	1.0592	1.9636	1.0592
Hexachlorobenzene	9.0292	9.0292	0	9.0292	0	9.0292	0	0.0383	8.9908
TOTAL PRIORITY ORGANICS	9.0292	9.0292	0	9.0292	0	9.0292	0	0.0383	8.9908
TOTAL NONCONVENTIONALS	0	0	0	0	0	0	0	0	0
TSS	176.2343	67.1731	109.0612	46.0051	130.2292	9.9678	166.2665	9.9678	166.2665
Oil and Grease	14.8061	14.8061	0	14.8061	0	14.8061	0	14.8061	0
TOTAL CONVENTIONALS	191.0404	81.9792	109.0612	60.8112	130.2292	24.7739	166.2665	24.7739	166.2665
TOTAL POLLUTANTS	203.0923	93.3371	109.7553	71.9574	131.1350	35.7667	167.3257	26.7758	176.3165

Table XII-2

COST OF COMPLIANCE FOR THE
PRIMARY RARE EARTH METALS SUBCATEGORY
INDIRECT DISCHARGERS

(March, 1982 Dollars)

Option	Proposal Costs		Promulgation Costs	
	Capital Cost	Annual Cost	Capital Cost	Annual Cost
A	49,087	23,373	39,600	22,000
B	76,587	27,182	80,700	31,200
C	80,575	29,928	101,200	40,500
E	126,775	43,368	146,400	54,300

Table XII-3

PSES AND PSNS WASTEWATER DISCHARGE RATES FOR THE PRIMARY RARE EARTH METALS SUBCATEGORY

Wastewater Stream	PSES and PSNS Normalized Discharge Rate l/kkg	PSES and PSNS Normalized Discharge Rate gal/ton	Production Normalizing Parameter
Dryer Vent Water Quench and Scrubber	4,173	1,000	Mischmetal produced from wet rare earth chlorides
Dryer Vent Caustic Wet Air Pollution Control	734	176	Mischmetal produced from wet rare earth chlorides
Electrolytic Cell Water Quench and Scrubber	9,390	2,250	Total mischmetal produced
Electrolytic Cell Caustic Wet Air Pollution Control	0	0	Total mischmetal produced
Sodium Hypochlorite Filter Backwash	362	87	Total mischmetal produced

TABLE XII-4

PSES FOR THE PRIMARY RARE EARTH METALS SUBCATEGORY

(a) Dryer Vent Water Quench and Scrubber PSES

Pollutant or Pollutant Property	Maximum for Any One Day	Maximum for Monthly Average
	mg/kg (lb/million lbs) of mischmetal produced from wet rare earth chlorides	
Benzene	0.042	0.042
*Hexachlorobenzene	0.042	0.042
Arsenic	5.800	2.587
Cadmium	0.835	0.334
*Chromium	1.544	0.626
Copper	5.341	2.546
*Lead	1.168	0.542
*Nickel	2.295	1.544
Selenium	3.422	1.544
Silver	1.210	0.501
Thallium	5.842	2.546
Zinc	4.256	1.753

(b) Dryer Vent Caustic Wet Air Pollution Control PSES

Pollutant or Pollutant Property	Maximum for Any One Day	Maximum for Monthly Average
	mg/kg (lb/million lbs) of mischmetal produced from wet rare earth chlorides	
Benzene	0.007	0.007
*Hexachlorobenzene	0.007	0.007
Arsenic	1.020	0.455
Cadmium	0.147	0.059
*Chromium	0.272	0.110
Copper	0.940	0.448
*Lead	0.206	0.095
*Nickel	0.404	0.272
Selenium	0.602	0.272
Silver	0.213	0.088
Thallium	1.028	0.448
Zinc	0.749	0.308

*Regulated Pollutant

TABLE XII-4 (Continued)

PSES FOR THE PRIMARY RARE EARTH METALS SUBCATEGORY

(c) Electrolytic Cell Water Quench and Wet APC PSES

Pollutant or Pollutant Property	Maximum for Any One Day	Maximum for Monthly Average
	mg/kg (lb/million lbs) of total mischmetal produced	
Benzene	0.094	0.094
*Hexachlorobenzene	0.094	0.094
Arsenic	13.050	5.822
Cadmium	1.878	0.751
*Chromium	3.474	1.409
Copper	12.020	5.728
*Lead	2.629	1.221
*Nickel	5.165	3.474
Selenium	7.700	3.474
Silver	2.723	1.127
Thallium	13.150	5.728
Zinc	9.578	3.944

(d) Electrolytic Cell Caustic Wet Air Pollution Control PSES

Pollutant or Pollutant Property	Maximum for Any One Day	Maximum for Monthly Average
	mg/kg (lb/million lbs) of total mischmetal produced	
Benzene	0.000	0.000
*Hexachlorobenzene	0.000	0.000
Arsenic	0.000	0.000
Cadmium	0.000	0.000
*Chromium	0.000	0.000
Copper	0.000	0.000
*Lead	0.000	0.000
*Nickel	0.000	0.000
Selenium	0.000	0.000
Silver	0.000	0.000
Thallium	0.000	0.000
Zinc	0.000	0.000

*Regulated Pollutant

TABLE XII-4 (Continued)

PSES FOR THE PRIMARY RARE EARTH METALS SUBCATEGORY

(e) Sodium Hypochlorite Filter Backwash PSES

Pollutant or Pollutant Property	Maximum for Any One Day	Maximum for Monthly Average
mg/kg (lb/million lbs) of total mischmetal produced		
Benzene	0.004	0.004
*Hexachlorobenzene	0.004	0.004
Arsenic	0.503	0.224
Cadmium	0.072	0.029
*Chromium	0.134	0.054
Copper	0.463	0.221
*Lead	0.101	0.047
*Nickel	0.199	0.134
Selenium	0.297	0.134
Silver	0.105	0.043
Thallium	0.507	0.221
Zinc	0.369	0.152

*Regulated Pollutant

TABLE XII-5

PSNS FOR THE PRIMARY RARE EARTH METALS SUBCATEGORY

(a) Dryer Vent Water Quench and Wet Air Pollution Control PSNS

Pollutant or Pollutant Property	Maximum for Any One Day	Maximum for Monthly Average
	mg/kg (lb/million lbs) of mischmetal produced from wet rare earth chlorides	
Benzene	0.042	0.042
*Hexachlorobenzene	0.042	0.042
Arsenic	5.800	2.587
Cadmium	0.835	0.334
*Chromium	1.544	0.626
Copper	5.341	2.546
*Lead	1.168	0.542
*Nickel	2.295	1.544
Selenium	3.422	1.544
Silver	1.210	0.501
Thallium	5.842	2.546
Zinc	4.256	1.753

(b) Dryer Vent Caustic Wet Air Pollution Control PSNS

Pollutant or Pollutant Property	Maximum for Any One Day	Maximum for Monthly Average
	mg/kg (lb/million lbs) of mischmetal produced from wet rare earth chlorides	
Benzene	0.007	0.007
*Hexachlorobenzene	0.007	0.007
Arsenic	1.020	0.455
Cadmium	0.147	0.059
*Chromium	0.272	0.110
Copper	0.940	0.448
*Lead	0.206	0.095
*Nickel	0.404	0.272
Selenium	0.602	0.272
Silver	0.213	0.088
Thallium	1.028	0.448
Zinc	0.749	0.308

*Regulated Pollutant

TABLE XII-5 (Continued)

PSNS FOR THE PRIMARY RARE EARTH METALS SUBCATEGORY

(c) Electrolytic Cell Water Quench and Wet APC PSNS

Pollutant or Pollutant Property	Maximum for Any One Day	Maximum for Monthly Average
mg/kg (lb/million lbs) of total mischmetal produced		
Benzene	0.094	0.094
*Hexachlorobenzene	0.094	0.094
Arsenic	13.050	5.822
Cadmium	1.878	0.751
*Chromium	3.474	1.409
Copper	12.020	5.728
*Lead	2.629	1.221
*Nickel	5.165	3.474
Selenium	7.700	3.474
Silver	2.723	1.127
Thallium	13.150	5.728
Zinc	9.578	3.944

(d) Electrolytic Cell Caustic Wet Air Pollution Control PSNS

Pollutant or Pollutant Property	Maximum for Any One Day	Maximum for Monthly Average
mg/kg (lb/million lbs) of total mischmetal produced		
Benzene	0.000	0.000
*Hexachlorobenzene	0.000	0.000
Arsenic	0.000	0.000
Cadmium	0.000	0.000
*Chromium	0.000	0.000
Copper	0.000	0.000
*Lead	0.000	0.000
*Nickel	0.000	0.000
Selenium	0.000	0.000
Silver	0.000	0.000
Thallium	0.000	0.000
Zinc	0.000	0.000

*Regulated Pollutant

TABLE XII-5 (Continued)

PSNS FOR THE PRIMARY RARE EARTH METALS SUBCATEGORY

(e) Sodium Hypochlorite Filter Backwash PSNS

Pollutant or Pollutant Property	Maximum for Any One Day	Maximum for Monthly Average
mg/kg (lb/million lbs) of total mischmetal produced		
Benzene	0.004	0.004
*Hexachlorobenzene	0.004	0.004
Arsenic	0.503	0.224
Cadmium	0.072	0.029
*Chromium	0.134	0.054
Copper	0.463	0.221
*Lead	0.101	0.047
*Nickel	0.199	0.134
Selenium	0.297	0.134
Silver	0.105	0.043
Thallium	0.507	0.221
Zinc	0.369	0.152

*Regulated Pollutant

SECTION XIII

BEST CONVENTIONAL POLLUTANT CONTROL TECHNOLOGY

EPA is not promulgating best conventional pollutant control technology (BCT) for the primary rare earth metals subcategory at this time.

THIS PAGE INTENTIONALLY LEFT BLANK

NONFERROUS METALS MANUFACTURING POINT SOURCE CATEGORY

DEVELOPMENT DOCUMENT SUPPLEMENT

for the

Secondary Indium Subcategory

William K. Reilly
Administrator

Rebecca Hanmer
Acting Assistant Administrator for Water

Martha Prothro, Director
Office of Water Regulations and Standards

Thomas P. O'Farrell, Director
Industrial Technology Division

Ernst P. Hall, P.E., Chief
Metals Industry Branch
and
Technical Project Officer

May 1989

U.S. Environmental Protection Agency
Office of Water
Office of Water Regulations and Standards
Industrial Technology Division
Washington, D. C. 20460

5525

TABLE OF CONTENTS

Section		Page
I	SUMMARY	5533
II	CONCLUSIONS	5535
III	SUBCATEGORY PROFILE	5539
	Description of Secondary Indium Production	5539
	Raw Materials	5539
	Dissolving, Precipitation, and Electrolytic Recovery	5539
	Electrolytic Refining	5540
	Melting and Casting	5540
	Process Wastewater Sources	5540
	Other Wastewater Sources	5540
	Age, Production, and Process Profile	5540
IV	SUBCATEGORIZATION	5543
	Factors Considered in Subdividing the Secondary Indium Subcategory	5543
	Other Factors	5543
	Production Normalizing Parameters	5544
V	WATER USE AND WASTEWATER CHARACTERISTICS	5545
	Wastewater Flow Rates	5545
	Wastewater Characteristics Data	5546
	Field Sampling Data	5546
	Wastewater Characteristics and Flows by Subdivision	5547
	Displacement Supernatant	5547
	Spent Electrolyte	5547
VI	SELECTION OF POLLUTANT PARAMETERS	5551
	Conventional and Nonconventional Pollutant Parameters Selected	5551
	Toxic Priority Pollutants	5552
	Toxic Pollutants Never Detected	5552
	Toxic Pollutants Never Found Above Their Analytical Quantification Concentration	5552
	Toxic Pollutants Present Below Concentrations Achievable by Treatment	5552
	Toxic Pollutants Detected in a Small Number of Sources	5553
	Toxic Pollutants Selected for further Consideration in Establishing Limitations and Standards	5554

TABLE OF CONTENTS (Continued)

Section		Page
VII	CONTROL AND TREATMENT TECHNOLOGIES	5563
	Current Control and Treatment Practices	5563
	Displacement Supernatant	5563
	Spent Electrolyte	5563
	Control and Treatment Options	5563
	Option A	5654
	Option C	5564
VIII	COSTS, ENERGY, AND NONWATER QUALITY ASPECTS	5565
	Treatment Options for Existing Sources	5565
	Option A	5565
	Option C	5565
	Cost Methodology	5566
	Nonwater Quality Aspects	5566
	Energy Requirements	5566
	Solid Waste	5566
	Air Pollution	5568
IX	BEST PRACTICABLE CONTROL TECHNOLOGY CURRENTLY AVAILABLE	5571
X	BEST AVAILABLE TECHNOLOGY ECONOMICALLY ACHIEVABLE	5571
XI	NEW SOURCE PERFORMANCE STANDARDS	5573
	Technical Approach to NSPS	5573
	Industry Cost and Pollutant Removal Estimates	5575
	Pollutant Removal Estimates	5575
	Compliance Costs	5375
	NSPS Option Selection - Proposal	5576
	NSPS Option Selection - Promulgation	5576
	Wastewater Discharge Rates	5577
	Displacement Supernatant	5577
	Spent Electrolyte	5577
	Regulated Pollutant Parameters	5577
	New Source Performance Standards	5578

TABLE OF CONTENTS (Continued)

Section		Page
XII	PRETREATMENT STANDARDS	5583
	Technical Approach to Pretreatment	5583
	Industry Cost and Pollutant Removal Estimates	5584
	Pretreatment Standards for Existing and New Sources	5584
	PSES Option Selection - Proposal	5584
	PSES Option Selection - Promulgation	5584
	PSNS Option Selection - Proposal	5585
	PSNS Option Selection - Promulgation	5585
	Pretreatment Standards	5586
XIII	BEST CONVENTIONAL POLLUTANT CONTROL TECHNOLOGY	5593

LIST OF TABLES

Table	Title	Page
V-1	Water Use and Discharge Rates for Displacement Supernatant	5549
V-2	Water Use and Discharge Rates for Spent Electrolyte	5549
VI-1	Frequency of Occurrence of Priority Pollutants Secondary Indium Subcategory Raw Wastewater	5556
VI-2	Toxic Pollutants Never Detected	5560
VIII-1	Cost of Compliance for the Secondary Indium Subcategory Indirect Dischargers	5569
XI-1	NSPS Wastewater Discharge Rates for the Secondary Indium Subcategory	5579
XI-2	NSPS for the Secondary Indium Subcategory	5580
XII-1	Pollutant Removal Estimates Secondary Indium Subcategory Indirect Dischargers	5587
XII-2	Cost of Compliance for the Secondary Indium Subcategory Indirect Dischargers	5588
XII-3	PSES and PSNS Wastewater Discharge Rates for the Secondary Indium Subcategory	5589
XII-4	PSES for the Secondary Indium Subcategory	5590
XII-5	PSNS for the Secondary Indium Subcategory	5591

SECONDARY INDIUM SUBCATEGORY

LIST OF FIGURES

Figure	Title	Page
III-1	Block Diagram for Indium Production	5541
XI-1	NSPS Treatment Scheme for Option A	5581
XI-2	NSPS Treatment Scheme for Option C	5582

THIS PAGE INTENTIONALLY LEFT BLANK

SECTION I

SUMMARY

This document provides the technical basis for promulgating pretreatment standards for existing indirect dischargers (PSES), pretreatment standards for new indirect dischargers (PSNS), and standards of performance for new source direct dischargers (NSPS).

The secondary indium subcategory consists of two plants. One discharges to a publicly owned treatment works (POTW), and one achieves zero discharge of process wastewater.

EPA first studied the secondary indium subcategory to determine whether differences in raw materials, final products, manufacturing processes, equipment, age and size of plants, and water usage required the development of separate effluent limitations and standards for different segments of the subcategory. This involved a detailed analysis of wastewater discharge and treated effluent characteristics, including the sources and volume of water used, the processes used, and the sources of pollutants and wastewaters in the plant, and the constituents of wastewaters, including toxic pollutants. As a result, two subdivisions have been identified for this subcategory that warrant separate effluent limitations. These include:

- Displacement supernatant, and
- Spent electrolyte.

Several distinct control and treatment technologies (both in-plant and end-of-pipe) applicable to the secondary indium subcategory were identified. The Agency analyzed both historical and newly generated data on the performance of these technologies, including their nonwater quality environmental impacts and air quality, solid waste generation, and energy requirements. EPA also studied various flow reduction techniques reported in the data collection portfolios (dcp) and plant visits.

Engineering costs were prepared for each of the control and treatment options considered for the subcategory. These costs were then used by the Agency to estimate the impact of implementing the various options in the subcategory. For each control and treatment option that the Agency found to be most effective and technically feasible in controlling the discharge of pollutants, the number of potential closures, number of employees affected, and impact on price were estimated. These results are reported in a separate document entitled "The Economic Impact Analysis of Effluent Limitations and Standards for the Nonferrous Metals Manufacturing Industry."

There is no plant currently discharging wastewater to a surface

water in the secondary indium subcategory. Therefore, BPT, BAT, and BCT do not apply to this subcategory, and are not promulgated.

Metals removal based on chemical precipitation and sedimentation technology is the basis for the PSES limitations. To meet the PSES effluent limitations based on this technology, the secondary indium subcategory is estimated to incur minimal capital and annual cost.

NSPS and PSNS are based on chemical precipitation and sedimentation technology. In selecting technology for new source standards, EPA recognizes that new plants have the opportunity to implement the best and most efficient manufacturing processes and treatment technology. As such, the technology basis of PSES has been selected as the best demonstrated technology.

The manufacturers of indium originally claimed much of the information made available to the Agency as the basis of this regulation to be confidential. However, they have released their claims of confidentially for the preparation of this text.

The mass limitations and standards for NSPS, PSES, and PSNS are presented in Section II.

SECTION II

CONCLUSIONS

EPA has divided the secondary indium subcategory into two subdivisions for the purpose of effluent limitations and standards. These subdivisions are:

(a) Displacement supernatant, and
(b) Spent electrolyte.

We are not promulgating BPT or BAT limitations for the secondary indium subcategory since there are no existing direct dischargers.

NSPS are promulgated based on the performance achievable by the application of chemical precipitation and sedimentation (lime and settle) technology. The following effluent standards are promulgated for new sources:

(a) Displacement Supernatant NSPS

Pollutant or Pollutant Property	Maximum for Any One Day	Maximum for Monthly Average
mg/kg (lb/million lbs) of indium metal produced		
Cadmium	2.105	0.929
Lead	2.600	1.238
Zinc	9.037	3.776
Indium	2.724	1.114
TSS	253.800	120.700
pH	Within the range of 7.5 to 10.0 at all times	

(b) Spent Electrolyte NSPS

Pollutant or Pollutant Property	Maximum for Any One Day	Maximum for Monthly Average
mg/kg (lb/million lbs) of cathode indium produced		
Cadmium	12.170	5.370
Lead	15.040	7.160
Zinc	52.270	21.840
Indium	15.750	6.444
TSS	1,468.000	698.100
pH	Within the range of 7.5 to 10.0 at all times	

PSES are promulgated based on the performance achievable by the application of chemical precipitation and sedimentation (lime and settle) technology. The following pretreatment standards are promulgated for existing sources:

(a) Displacement Supernatant PSES

Pollutant or Pollutant Property	Maximum for Any One Day	Maximum for Monthly Average
mg/kg (lb/million lbs) of indium metal produced		
Cadmium	2.105	0.929
Lead	2.600	1.238
Zinc	9.037	3.776
Indium	2.724	1.114

(b) Spent Electrolyte PSES

Pollutant or Pollutant Property	Maximum for Any One Day	Maximum for Monthly Average
mg/kg (lb/million lbs) of cathode indium produced		
Cadmium	12.170	5.370
Lead	15.040	7.160
Zinc	52.270	21.840
Indium	15.750	6.444

PSNS are promulgated based on the performance achievable by the application of chemical precipitation and sedimentation (lime and settle) technology. The following pretreatment standards are promulgated for new sources:

(a) Displacement Supernatant PSNS

Pollutant or Pollutant Property	Maximum for Any One Day	Maximum for Monthly Average
mg/kg (lb/million lbs) of indium metal produced		
Cadmium	2.105	0.929
Lead	2.600	1.238
Zinc	9.037	3.776
Indium	2.724	1.114

(b) Spent Electrolyte PSNS

Pollutant or Pollutant Property	Maximum for Any One Day	Maximum for Monthly Average
mg/kg (lb/million lbs) of cathode indium produced		
Cadmium	12.170	5.370
Lead	15.040	7.160
Zinc	52.270	21.840
Indium	15.750	6.444

EPA is not promulgating best conventional pollutant control technology (BCT) limitations at this time.

THIS PAGE INTENTIONALLY LEFT BLANK

SECTION III

SUBCATEGORY PROFILE

This section of the secondary indium supplement describes the raw materials and processes used in producing secondary indium and presents a profile of the secondary indium plants identified in this study.

Indium is used primarily in solders, seals, lubricants, and electrical conductors. The low melting point of indium (156°C) makes indium an ideal metal for use in solders. In addition, indium can increase the electrical conductivity of other metals.

DESCRIPTION OF SECONDARY INDIUM PRODUCTION

The production of indium metal from secondary sources can be divided into three distinct processes; dissolution and precipitation of low-grade indium, electrolytic refining of high-grade indium and melting and casting operations. A schematic diagram of the secondary indium production processes is presented in Figure III-1 (page 5443).

RAW MATERIALS

The principal raw materials used for secondary indium production are scrap indium metal and spent electrolytic solutions from secondary silver refining operations.

DISSOLVING, PRECIPITATION, AND ELECTROLYTIC RECOVERY

Indium scrap is dissolved in hydrochloric acid to produce an indium-laden solution. The indium-rich solution then undergoes a series of precipitation steps to selectively remove metallic impurities such as tin and lead. Spent electrolytic solutions from secondary silver refineries may be added to the the indium solution. The resulting indium solution is then processed to precipitate out the indium. Zinc ions are added to the indium-rich solution to displace and precipitate indium. The indium sponge is then removed and sent to the melting and casting operation. This operation produces indium which is suitable for further purification by electrolytic refining.

One plant recovers indium from solution using an electrolytic recovery process. This plant obtains indium-rich solutions from dissolution of low grade indium metal or scrap, and also uses spent plating solutions. Electrolytic recovery of indium from solution produces a salable product or one that may be further purified by electrolytic refining. Spent solution from the electrolytic recovery process is recycled to the dissolving operation.

ELECTROLYTIC REFINING

This process is used to produce high purity indium (up to 99.9999 percent). In this process, the low grade indium acts as the anode in an electrolyte solution. The electrolyte solution contains very high concentrations of dissolved salts and metals and has a pH in the range of 1.5 to 2.5.

A current is applied to the electrolytic bath and high purity indium plates out on the cathode. This process may be repeated until the desired grade of indium is obtained.

MELTING AND CASTING

Indium from the dissolution-precipitation, electrolytic recovery, or electrolytic refining processes, as well as scrap indium metal can be melted down and cast into desired product forms. All indium melting and casting operations are dry.

PROCESS WASTEWATER SOURCES

The significant wastewater sources associated with the secondary indium subcategory can be subdivided into two subdivisions as follows:

1. Displacement supernatant, and
2. Spent electrolyte.

OTHER WASTEWATER SOURCES

There may be other wastewater streams associated with the secondary indium subcategory. These streams may include stormwater runoff, and maintenance and cleanup water. These wastewaters are not considered as a part of this rulemaking. EPA believes that the flows and pollutant loadings associated with these wastewaters are insignificant relative to the waste wastewater streams selected and are best handled by the appropriate permit authority on a case-by-case basis under authority of Section 402 of the Clean Water Act.

AGE, PRODUCTION, AND PROCESS PROFILE

The secondary indium plants operating in the United States are located in the northeastern United States. One plant uses precipitation and electrolytic refining processes and is an indirect discharger of treated process wastewater. Other plants operate electrolytic recovery and electrolytic refining processes and achieve zero discharge of process wastewater.

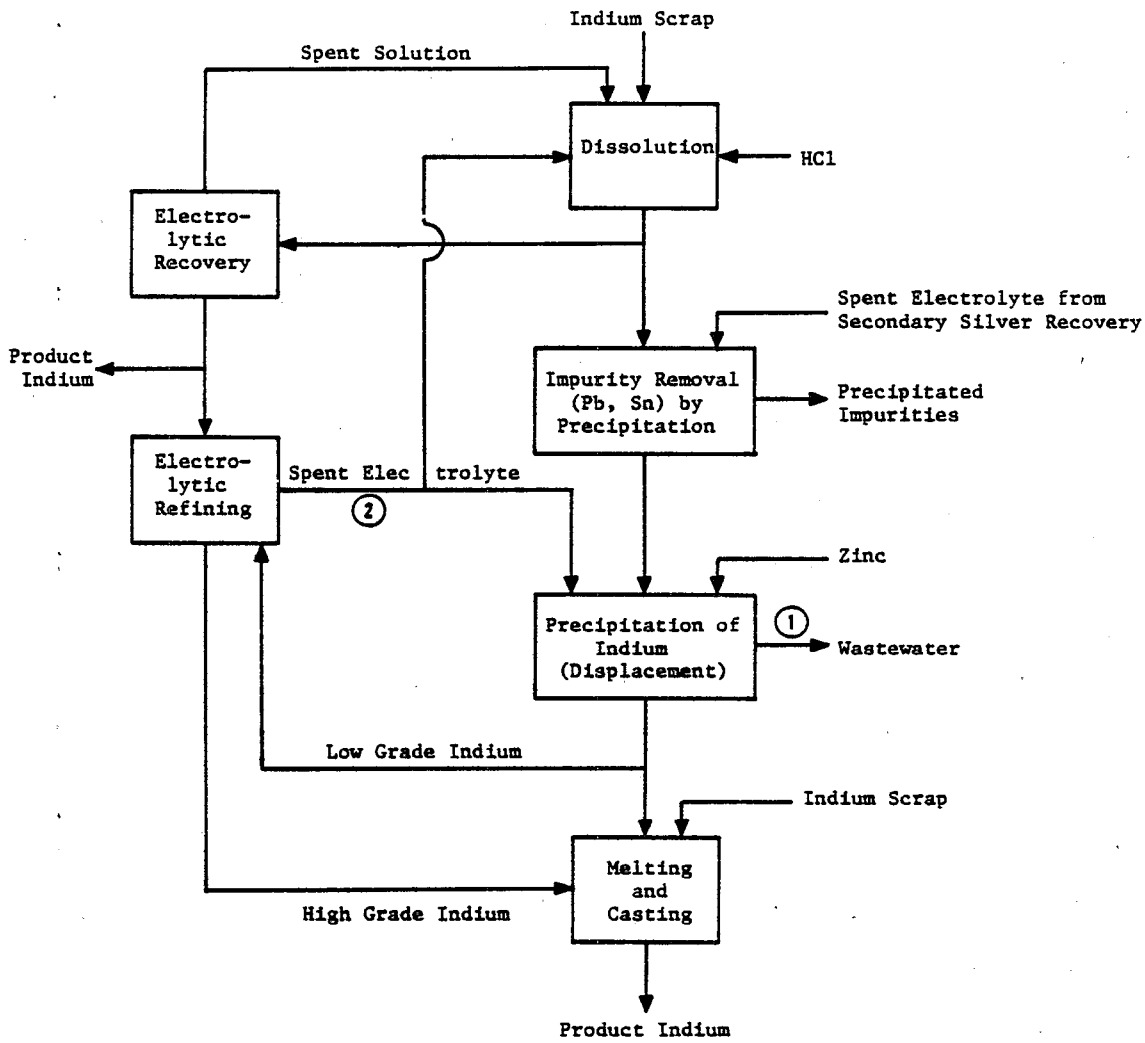

Figure III-1

BLOCK DIAGRAM FOR INDIUM PRODUCTION

THIS PAGE INTENTIONALLY LEFT BLANK

SECTION IV

SUBCATEGORIZATION

This section summarizes the factors considered during the designation of the related subdivisions of the secondary indium subcategory. Production normalizing parameters for each subdivision will also be discussed.

FACTORS CONSIDERED IN SUBDIVIDING THE SECONDARY INDIUM SUBCATEGORY

The factors listed previously for general subcategorization were each evaluated when considering subdivision of the secondary indium subcategory. In the discussion that follows, the factors will be described as they pertain to this particular subcategory.

The rationale for considering further subdivision of the secondary indium subcategory is based primarily on differences in the production processes and raw materials used. Within this subcategory, several different operations are performed, which may or may not have a water use or discharge, and which may require the establishment of separate effluent limitations. While indium is considered a single subcategory, a more thorough examination of the production processes has illustrated the need for limitations and standards based on a specific set of waste streams. Limitations will be based on specific flow allowances for the following subdivisions:

1. Displacement supernatant, and
2. Spent electrolyte.

These subdivisions follow directly from differences within the processes used in the production of secondary indium.

Dissolution and precipitation (displacement) of scrap indium gives rise to the first subdivision. The supernatant from the displacement of indium is the only source of wastewater associated with this refining process. The electrolytic refining method results in the second subdivision. The spent electrolyte is the only potential discharge from this operation. The final production stage, melting and casting of indium is a dry operation, and therefore, does not warrant a separate subdivision.

OTHER FACTORS

The other factors considered in this evaluation were shown to be inappropriate bases for subdivision. Certain other factors, such as plant age, plant size, and the number of employees, were also evaluated and determined to be inappropriate for use as bases for subdivision of nonferrous metals plants.

PRODUCTION NORMALIZING PARAMETERS

As discussed previously, the effluent limitations and standards developed in this document establish mass limitations on the discharge of specific pollutant parameters. To allow these regulations to be applied to any plant which might have varying production capacities, the mass of pollutant discharged must be related to a unit of production. This factor is known as the production normalizing parameter (PNP).

For each production process which has a wastewater associated with it, the actual mass of indium product will be used as the PNP. Thus, the PNPs for the two subdivisions are as follows:

Subdivision	PNP
1. Displacement supernatant	kkg of indium produced
2. Spent electrolyte	kkg of cathode indium produced

The use of production capacity instead of actual production was eliminated from consideration as an alternate PNP because the mass of the pollutant produced is more a function of true production than of installed capacity.

SECTION V

WATER USE AND WASTEWATER CHARACTERISTICS

This section describes the characteristics of the wastewaters associated with the secondary indium subcategory. Data used to characterize the waste-wastewater flow and pollutant concentrations are presented , summarized and discussed.

The two principal data sources used are data collection portfolios (dcp) and field sampling results. Data collection portfolios contain information regarding wastewater flows and production levels.

In order to quantify the pollutant discharge from secondary indium plants, a field sampling program was conducted. Wastewater samples were analyzed for 124 of the 126 toxic pollutants and other pollutants deemed appropriate. Because the analytical standard for TCDD was judged to be too hazardous to be made generally available, samples were never analyzed for this pollutant. Samples were also not analyzed for asbestos. There is no reason to expect that TCDD or asbestos would be present in nonferrous metals manufacturing wastewater. Sampling was conducted in the secondary indium subcategory. In general, the samples were analyzed for three classes of pollutants: toxic organic pollutants, toxic metal pollutants, and criteria pollutants (which includes both conventional and nonconventional pollutants).

No additional sampling data for this subcategory were obtained from EPA sampling efforts or industry comments between proposal and promulgation. Characterization of secondary indium subcategory wastewaters (Section V), and selection of pollutant parameters for limitation (Section VI) is be based upon the same data used for proposal.

As described in Section IV of this supplement, the secondary indium subcategory has been divided into two subdivisions or wastewater sources, so that the promulgated regulation contains mass discharge limitations and standards for two unit processes discharging process wastewater. It is expected that the wastewater characteristics for these subdivisions will be similar. However, since each subdivision has differing discharge and production rates, wastewater streams corresponding to each subdivision are addressed separately in the discussions that follow. These wastewater sources are:

1. Displacement supernatant, and
2. Spent electrolyte.

WASTEWATER FLOW RATES

Data supplied by dcp responses were evaluated, and two flow-to-

production ratios, water use and wastewater discharge flow, were calculated for each stream. The two ratios are differentiated by the flow value used in calculation. Water use is defined as the volume of water or other fluid required for a given process per mass of indium product and is therefore based on the sum of recycle and make-up flows to a given process. Wastewater flow discharged after pretreatment or recycle (if these are present) is used in calculating the production normalized flow--the volume of wastewater discharged from a given process to further treatment, disposal, or discharge per mass of indium produced. Differences between the water use and wastewater flows associated with a given stream result from recycle, evaporation, and carry-over on the product. The production values used in the calculation correspond to the production normalizing parameter, PNP, assigned to each stream, as outlined in Section IV.

The production normalized discharge flows were compiled and statistically analyzed by stream type. These production normalized water use and discharge flows are presented by subdivision at the end of this section, in Tables V-1 and V-2 (page 5451).

The water use and discharge rates shown do not include nonprocess wastewater, such as rainfall runoff and noncontact cooling water.

WASTEWATER CHARACTERISTICS DATA

The data used to characterize the various wastewaters associated with secondary indium production come from a field sampling trip.

FIELD SAMPLING DATA

In order to quantify the concentrations of pollutants present in wastewater from secondary indium plants, wastewater samples were collected. One sampled plant is currently not operating. At the time of sampling, this facility produced indium by leaching of indium-rich slags with hydrochloric acid and precipitation of indium from solution by displacement with zinc. A diagram showing the sampling sites nd processes contributing wastewaters is shown in Figure V-1 (page 5561). The spent electrolyte wastewater stream was not sampled, however, spent electrolyte wastewater is expected to be similar to the displacement tank supernatant which was sampled. The displacement tank supernatant data will be used to characterize the spent electrolyte wastewater stream.

Analytical results for displacement tank supernatant are summarized in table V-3 (page 5550). When there no data are listed for a specific day of sampling, the wastewater samples for that stream were not collected.

The data tables include some samples measured at concentrations considered not quantifiable. The base-neutral extractable, acid extractable, and volatile organics generally are considered not quantifiable at concentrations equal to or less than 0.010 mg/l. Below this concentration, organic analytical results are not

quantitatively accurate; however, the analyses are useful to indicate the presence of a particular pollutant. The pesticide fraction is considered not quantifiable at concentrations equal to or less than 0.005 mg/l.

The detection limits shown on the data tables are not the same in all cases as the published detection limits for these pollutants by the same analytical methods. The detection limits used were reported with the analytical data and hence are the appropriate limits to apply to the data. Detection limit variation can occur as a result of a number of laboratory-specific, equipment-specific, and daily operator-specific factors. These factors can include day-to-day differences in machine calibration, variation in stock solutions, and variation in operators.

The statistical analysis of data includes some samples measured at concentrations considered not quantifiable. These data are considered as detected but below quantifiable concentrations, and a value of zero is used for averaging. Toxic organic, nonconventional, and conventional pollutant data reported with a "less than" sign are considered as detected, but not further quantifiable. A value of zero is also used for averaging. If a pollutant is reported as not detected, a value of zero is used in calculating the average. Finally, toxic metal values reported as less than a certain value were considered as below quantification, and consequently a value of zero was used in the calculation of the average.

Appropriate source water concentrations are presented with the summaries of the sampling data. The method by which each sample was collected is indicated by number, as follows:

1 one-time grab
2 manual composite during intermittent process operation
3 8-hour manual composite
4 8-hour automatic composite
5 24-hour manual composite
6 24-hour automatic composite

WASTEWATER CHARACTERISTICS AND FLOWS BY SUBDIVISION

Since secondary indium production involves two principal sources of wastewater and each has potentially different characteristics and flows, the wastewater characteristics and discharge rates corresponding to each subdivision will be described separately. A brief description of why the associated production processes generate a wastewater and explanations for variations of water use within each subdivision will be presented.

DISPLACEMENT SUPERNATANT

Scrap indium materials are dissolved in hydrochloric acid to solubilize the indium. The indium-rich solution then goes through ionic displacement steps to remove pollutant metals such as tin and lead. Next, indium is precipitated out of the

solution by zinc ions. The production normalized water use rate reported for this process step is 6190 l/kkg of indium produced. The production normalized discharge rate reported for this displacement operation is also 6190 l/kkg of indium produced and no recycle or reuse is practiced. These rates are shown in Table V-1 (page 5541). This wastewater stream is characterized by a pH of about 4 and contains treatable concentrations of zinc and suspended solids.

SPENT ELECTROLYTE

In this process low grade indium is used to produce indium with a purity of up to 99.9999 percent. The low grade indium is used as the anode in an electrolyte solution. High purity indium is deposited on the cathode when a current is applied to the solution. All spent electrolyte from this step has additional indium recovered in the dissolution-precipitation process at the indium precipitation stage. The production normalized water use rate reported by the one plant for spent electrolyte is equivalent to the production normalized discharge rate and equals 35,800 l/kkg of cathode indium produced. These rates are shown in Table V-2 (page 5452). No sampling data were collected for this wastewater stream; however, it is expected to have pollutant characteristics similar to those of the displacement tank supernatant. Therefore, this wastewater stream is expected to contain toxic metals and suspended solids at treatable concentrations.

TABLE V-1

WATER USE AND DISCHARGE RATES FOR DISPLACEMENT SUPERNATANT

(l/kkg of indium produced)

Plant Code	Percent Recycle	Production Normalized Water Use	Production Normalized Discharge Flow
1132	0	6190	6190

TABLE V-2

WATER USE AND DISCHARGE RATES FOR SPENT ELECTROLYTE

(l/kkg of cathode indium produced)

Plant Code	Percent Recycle	Production Normalized Water Use	Production Normalized Discharge Flow
1132	0	35800	35800

Table V-3

SECONDARY INDIUM SAMPLING DATA
DISPLACEMENT SUPERNATANT
RAW WASTEWATER

Pollutant	Stream Code	Sample Type*	Concentrations (mg/l) Source	Day 1	Day 2	Day 3
Toxic Pollutants						
1. acenaphthene	077	1	ND	ND		
2. acrolein	077	1	ND	ND		
3. acrylonitrile	077	1	ND	ND		
4. benzene	077	1	ND	ND		
5. benzidine	077	1	ND	ND		
6. carbon tetrachloride	077	1	ND	ND		
7. chlorobenzene	077	1	ND	ND		
8. 1,2,4-trichlorobenzene	077	1	ND	ND		
9. hexachlorobenzene	077	1	ND	ND		
10. 1,2-dichloroethane	077	1	ND	ND		
11. 1,1,1-trichloroethane	077	1	ND	ND		
12. hexachloroethane	077	1	ND	ND		
13. 1,1-dichloroethane	077	1	ND	ND		
14. 1,1,2-trichloroethane	077	1	ND	ND		

Table V-3 (Continued)

SECONDARY INDIUM SAMPLING DATA
DISPLACEMENT SUPERNATANT
RAW WASTEWATER

Pollutant	Stream Code	Sample Type*	Concentrations (mg/l) Source	Day 1	Day 2	Day 3
Toxic Pollutants (Continued)						
15. 1,1,2,2-tetrachloroethane	077	1	ND	ND		
16. chloroethane	077	1	ND	ND		
17. bis(chloromethyl)ether	077	1	ND	ND		
18. bis(2-chloroethyl)ether	077	1	ND	ND		
19. 2-chloroethyl vinyl ether	077	1	ND	ND		
20. 2-chloronaphthalene	077	1	ND	ND		
21. 2,4,6-trichlorophenol	077	1	ND	ND		
22. p-chloro-m-cresol	077	1	ND	ND		
23. chloroform	077	1	ND	ND		
24. 2-chlorophenol	077	1	ND	ND		
25. 1,2-dichlorobenzene	077	1	ND	ND		
26. 1,3-dichlorobenzene	077	1	ND	ND		
27. 1,4-dichlorobenzene	077	1	ND	ND		

Table V-3 (Continued)

SECONDARY INDIUM SAMPLING DATA
DISPLACEMENT SUPERNATANT
RAW WASTEWATER

Pollutant	Stream Code	Sample Type*	Concentrations (mg/l) Source	Day 1	Day 2	Day 3
Toxic Pollutants (Continued)						
28. 3,3'-dichlorobenzidine	077	1	ND	ND		
29. 1,1-dichloroethylene	077	1	ND	ND		
30. 1,2-trans-dichloroethylene	077	1	ND	ND		
31. 2,4-dichlorophenol	077	1	ND	ND		
32. 1,2-dichloropropane	077	1	ND	ND		
33. 1,3-dichloropropene	077	1	ND	ND		
34. 2,4-dimethylphenol	077	1	ND	ND		
35. 2,4-dinitrotoluene	077	1	ND	ND		
36. 2,6-dinitrotoluene	077	1	ND	ND		
37. 1,2-diphenylhydrazine	077	1	ND	ND		
38. ethylbenzene	077	1	0.012	ND		
39. fluoranthene	077	1	ND	ND		
40. 4-chlorophenyl phenyl ether	077	1	ND	ND		
41. 4-bromophenyl phenyl ether	077	1	ND	ND		

Table V-3 (Continued)

SECONDARY INDIUM SAMPLING DATA
DISPLACEMENT SUPERNATANT
RAW WASTEWATER

Pollutant	Stream Code	Sample Type*	Concentrations (mg/l) Source	Day 1	Day 2	Day 3
Toxic Pollutants (Continued)						
42. bis(2-chloroisopropyl)ether	077	1	ND	ND		
43. bis(2-choroethoxy)methane	077	1	ND	ND		
44. methylene chloride	077	1	0.055	0.021		
45. methyl chloride (chloromethane)	077	1	ND	ND		
46. methyl bromide (bromomethane)	077	1	ND	ND		
47. bromoform (tribromomethane)	077	1	ND	ND		
48. dichlorobromomethane	077	1	ND	ND		
49. trichlorofluoromethane	077	1	ND	ND		
50. dichlorodifluoromethane	077	1	ND	ND		
51. chlorodibromomethane	077	1	ND	ND		
52. hexachlorobutadiene	077	1	ND	ND		
53. hexachlorocyclopentadiene	077	1	ND	ND		
54. isophorone	077	1	ND	ND		
55. naphthalene	077	1	ND	ND		

Table V-3 (Continued)

SECONDARY INDIUM SAMPLING DATA
DISPLACEMENT SUPERNATANT
RAW WASTEWATER

Pollutant	Stream Code	Sample Type*	Concentrations (mg/l) Source	Day 1	Day 2	Day 3
Toxic Pollutants (Continued)						
56. nitrobenzene	077	1	ND	ND		
57. 2-nitrophenol	077	1	ND	ND		
58. 4-nitrophenol	077	1	ND	ND		
59. 2,4-dinitrophenol	077	1	ND	ND		
60. 4,6-dinitro-o-cresol	077	1	ND	ND		
61. N-nitrosodimethylamine	077	1	ND	ND		
62. N-nitrosodiphenylamine	077	1	ND	ND		
63. N-nitrosodi-n-propylamine	077	1	ND	ND		
64. pentachlorophenol	077	1	<0.01	0.041		
65. phenol	077	1	ND	0.029		
66. bis(2-ethylhexyl) phthalate	077	1	ND	ND		
67. butyl benzyl phthalate	077	1	ND	ND		
68. di-n-butyl phthalate	077	1	<0.01	<0.01		
69. di-n-octyl phthalate	077	1	ND	ND		

Table V-3 (Continued)

SECONDARY INDIUM SAMPLING DATA
DISPLACEMENT SUPERNATANT
RAW WASTEWATER

Pollutant	Stream Code	Sample Type*	Concentrations (mg/l) Source	Day 1	Day 2	Day 3
Toxic Pollutants (Continued)						
70. diethyl phthalate	077	1	ND	<0.01		
71. dimethyl phthalate	077	1	ND	<0.01		
72. benzo(a)anthracene	077	1	ND	ND		
73. benzo(a)pyrene	077	1	ND	ND		
74. benzo(b)fluoranthene	077	1	ND	ND		
75. benzo(k)fluoranthane	077	1	ND	ND		
76. chrysene	077	1	ND	ND		
77. acenaphthylene	077	1	ND	ND		
78. anthracene (a)	077	1	ND	ND		
79. benzo(ghi)perylene	077	1	ND	ND		
80. fluorene	077	1	ND	ND		
81. phenanthrene (a)	077	1	ND	ND		
82. dibenzo(a,h)anthracene	077	1	ND	ND		
83. indeno (1,2,3-c,d)pyrene	077	1	ND	ND		

Table V-3 (Continued)

SECONDARY INDIUM SAMPLING DATA
DISPLACEMENT SUPERNATANT
RAW WASTEWATER

Pollutant	Stream Code	Sample Type*	Concentrations (mg/l) Source	Day 1	Day 2	Day 3
Toxic Pollutants (Continued)						
84. pyrene	077	1	ND	ND		
85. tetrachloroethylene	077	1	ND	ND		
86. toluene	077	1	ND	ND		
87. trichloroethylene	077	1	ND	ND		
88. vinyl chloride (chloroethylene)	077	1	ND	ND		
89. aldrin	077	1	ND	ND		
90. dieldrin	077	1	ND	ND		
91. chlordane	077	1	ND	ND		
92. 4,4'-DDT	077	1	ND	ND		
93. 4,4'-DDE	077	1	ND	ND		
94. 4,4'-DDD	077	1	ND	ND		
95. alpha-endosulfan	077	1	ND	ND		
96. beta-endosulfan	077	1	ND	ND		
97. endosulfan sulfate	077	1	ND	ND		

Table V-3 (Continued)

SECONDARY INDIUM SAMPLING DATA
DISPLACEMENT SUPERNATANT
RAW WASTEWATER

Pollutant	Stream Code	Sample Type*	Concentrations (mg/l) Source	Day 1	Day 2	Day 3
Toxic Pollutants (Continued)						
98. endrin	077	1	ND	ND		
99. endrin aldehyde	077	1	ND	ND		
100. heptachlor	077	1	ND	ND		
101. heptachlor epoxide	077	1	ND	ND		
102. alpha-BHC	077	1	ND	ND		
103. beta-BHC	077	1	ND	0.0002		
104. gamma-BHC	077	1	ND	ND		
105. delta-BHC	077	1	ND	ND		
106. PCB-1242 (b)	077	1	ND	ND		
107. PCB-1254 (b)	077	1	ND	ND		
108. PCB-1221 (b)	077	1	ND	ND		
109. PCB-1232 (c)	077	1	ND	ND		
110. PCB-1248 (c)	077	1	ND	ND		
111. PCB-1260 (c)	077	1	ND	ND		

Table V-3 (Continued)

SECONDARY INDIUM SAMPLING DATA
DISPLACEMENT SUPERNATANT
RAW WASTEWATER

Pollutant	Stream Code	Sample Type*	Concentrations (mg/l) Source	Day 1	Day 2	Day 3
Toxic Pollutants (Continued)						
112. PCB-1016 (c)	077	1	ND	ND		
113. toxaphene	077	1	ND	ND		
114. antimony	077	1	0.047	0.032		
115. arsenic	077	1	<0.001	<0.001		
117. beryllium	077	1	0.08	0.16		
118. cadmium	077	1	0.3	20		
119. chromium (total)	077	1	0.049	1.2		
120. copper	077	1	0.003	0.14		
121. cyanide (total)	077	1	0.026	0.150		
122. lead	077	1	<0.001	4.4		
123. mercury	077	1	<0.0002	<0.0002		
124. nickel	077	1	0.045	0.40		
125. selenium	077	1	<0.001	0.63		
126. silver	077	1	0.005	0.78		

Table V-3 (Continued)

SECONDARY INDIUM SAMPLING DATA
DISPLACEMENT SUPERNATANT
RAW WASTEWATER

Pollutant	Stream Code	Sample Type*	Concentrations (mg/l) Source	Day 1	Day 2	Day 3
Toxic Pollutants (Continued)						
127. thallium	077	1	0.037	11		
128. zinc	077	1	0.055	260,000		
Nonconventional Pollutants						
calcium	077	1	6.5	60		
fluoride	077	1	0.05	0.01		
magnesium	077	1	1.7	52		
phenolics (4-AAP)	077	1	<0.001	0.2		
sulfate	077	1	21	280		
tin	077	1	<0.9	1.8		
total solids (TS)	077	1	110	710,000		

Table V-3 (Continued)

SECONDARY INDIUM SAMPLING DATA
DISPLACEMENT SUPERNATANT
RAW WASTEWATER

Pollutant	Stream Code	Sample Type*	Concentrations (mg/l) Source	Day 1	Day 2	Day 3
Conventional Pollutants						
total suspended solids (TSS)	077	1	5	15,000		
pH (standard units)	077	1	7.4	4.1		

*Sample Type Code: 1 - One-time grab

(a),(b),(c) Reported together.

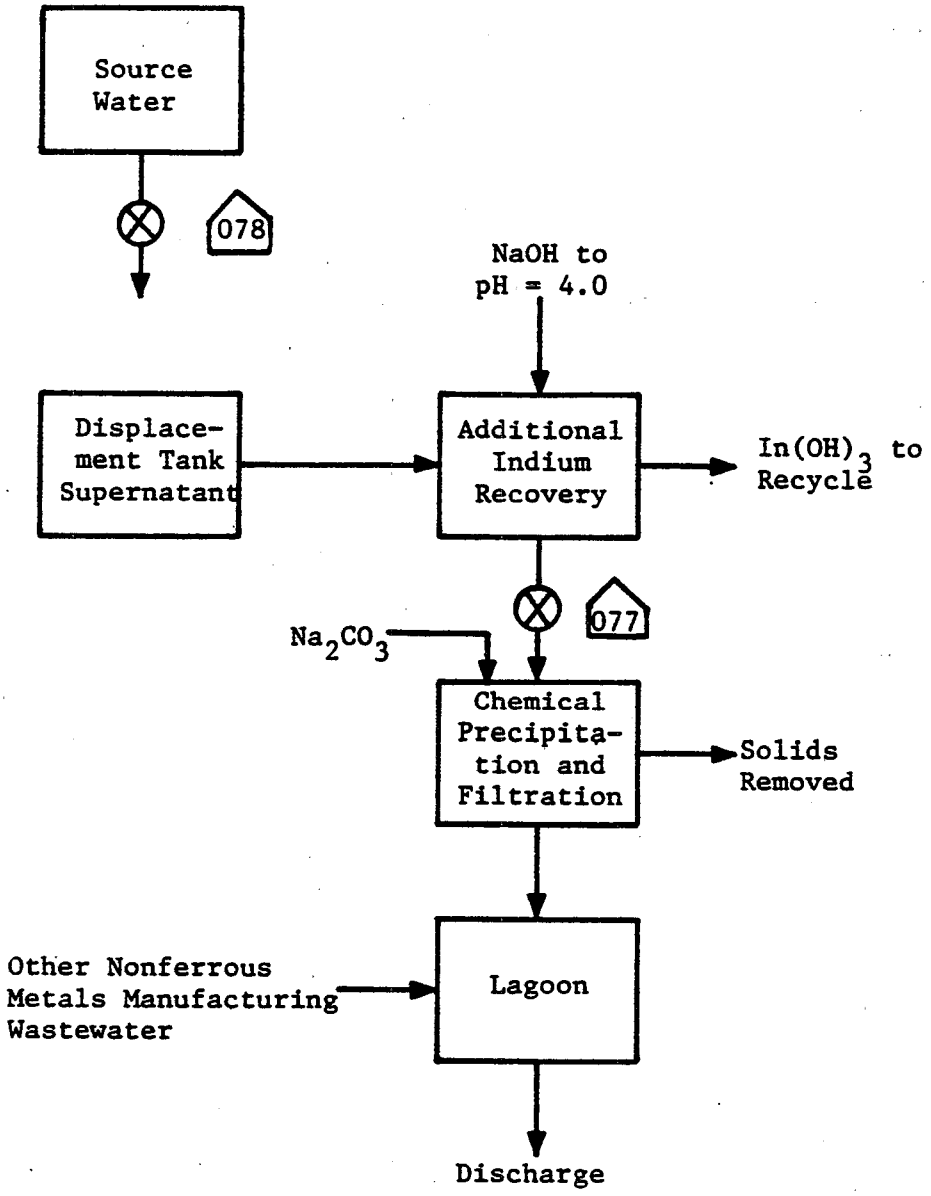

Figure V-1

SAMPLING SITES AT INDIUM MANUFACTURING FACILITY

THIS PAGE INTENTIONALLY LEFT BLANK

SECTION VI

SELECTION OF POLLUTANT PARAMETERS

Section V of this supplement presented data from sampling and subsequent chemical analyses of wastewaters from secondary indium production.
This section examines that data and discusses the selection or exclusion of pollutants for potential limitation.

The discussion that follows describes the analysis that was performed to select or exclude toxic pollutants for further consideration for limitations and standards. Also, conventional and nonconventional pollutants will be selected for regulation. Toxic pollutants will be considered for limitation if they are present in concentrations treatable by the technologies considered in this analysis. The treatable concentrations used for the priority metals were the long-term performance values achievable by chemical precipitation, sedimentation, and filtration. The treatable concentrations used for the priority organics were the long-term performance values achievable by carbon adsorption.

CONVENTIONAL AND NONCONVENTIONAL POLLUTANT PARAMETERS SELECTED

This study examined samples from the secondary indium subcategory for two conventional pollutant parameters (total suspended solids and pH) and one nonconventional pollutant parameter (indium).

The conventional and nonconventional pollutants or pollutant parameters selected for limitation in this subcategory are:

indium
total suspended solids (TSS)
pH

Although indium was not analyzed for in the sample of raw wastewater from this subcategory, it is expected to be present in treatable concentrations based on the raw materials and production processes used. Indium is soluble in aqueous solutions at the raw wastewater pH (4.1) and, therefore, is expected in the supernatant from the displacement tank at a concentration exceeding 0.07 mg/l (treatable concentration). For these reasons, indium is selected for limitation in this subcategory.

A TSS concentration of 15,000 mg/l was observed in the raw waste sample analyzed for this study. This concentration is well above the 2.6 mg/l concentration considered achievable by identified treatment technology. Furthermore, most of the specific methods used to remove toxic metals do so by converting these metals to precipitates, and the toxic-metal-containing precipitates should not be discharged. Meeting a limitation on total suspended

solids helps ensure that removal of these precipitated toxic metals has been effective. For these reasons, total suspended solids are selected for limitation in this subcategory.

The pH value observed during this study was 4.1, which is outside the 7.5 to 10.0 range considered desirable for discharge to receiving waters. Many deleterious effects are caused by extreme pH values or rapid changes in pH. Also, effective removal of toxic metals by precipitation requires careful control of pH. Since pH control within the desirable limits is readily attainable by available treatment, pH is selected for limitation in this subcategory.

TOXIC PRIORITY POLLUTANTS

The frequency of occurrence of the priority pollutants in one raw wastewater sample is presented in Table VI-1 (page 5470). Table VI-1 is based on the raw wastewater sample data from stream 77 (see Section V). These data provide the basis for the categorization of specific pollutants, as discussed below. Treatment plant samples are not considered in the frequency count.

TOXIC POLLUTANTS NEVER DETECTED

The toxic pollutants listed in Table VI-2 (page 5474) were not detected in any raw wastewater samples from this subcategory. Therefore, they are not selected for consideration in establishing limitations.

TOXIC POLLUTANTS NEVER FOUND ABOVE THEIR ANALYTICAL QUANTIFICATION CONCENTRATION

The toxic pollutants listed below were never found above their analytical quantification concentration in any raw wastewater samples from this subcategory; therefore, they are not selected for consideration in establishing limitations.

68. di-n-butyl phthalate
70. diethyl phthalate
71. dimethyl phthalate
103. beta-BHC
114. antimony
115. arsenic
123. mercury

TOXIC POLLUTANTS PRESENT BELOW CONCENTRATIONS ACHIEVABLE BY TREATMENT

The pollutants listed below are not selected for consideration in establishing limitations because they were not found in any raw wastewater samples from this subcategory above concentrations considered achievable by existing or available treatment technologies. These pollutants are discussed individually following the list.

117. beryllium
120. copper

Beryllium was detected at a concentration of 0.16 mg/l. This is below the 0.20 mg/l concentration considered achievable by available treatment. Therefore, beryllium is not selected for limitation.

Copper was detected at a concentration of 0.14 mg/l. Since this concentration is below the 0.39 mg/l concentration considered achievable by identified treatment technology, copper is not selected for limitation.

TOXIC POLLUTANTS DETECTED IN A SMALL NUMBER OF SOURCES

The following pollutants were not selected for limitation on the basis that they are detectable in the effluent from only a small number of sources within the subcategory, and are uniquely related to only these sources:

44. methylene chloride
64. pentachlorophenol
65. phenol
121. cyanide

Although these pollutants were not selected for limitation in establishing nationwide regulations, it may be appropriate, on a case-by-case basis, for the local permitting authority to specify effluent limitations.

Methylene chloride was detected at a concentration of 0.021 mg/l. Methylene chloride is a common laboratory reagent often detected in blank and source water samples. At the sampled plant, the source water was measured at 0.55 mg/l methylene chloride. The observed concentration of methylene chloride is probably due to laboratory contamination. Methylene chloride is therefore not selected for limitation.

Pentachlorophenol was found to be present at a concentration of 0.041 mg/l. This is above its treatability concentration of 0.010 mg/l; however, pentachlorophenol was also detected in the source water. Pentachlorophenol is not expected to be present because it is not used as a raw material or produced as a by-product or an intermediate. Additionally, because the detected concentration is only slightly above the treatability level, very little removal would be achieved. For these reasons, pentachlorophenol is not selected.

Phenol was detected at a concentration of 0.029 mg/l. Because this value is only slightly greater than the concentration considered achievable by identified treatment technology (0.010 mg/l) and because the Agency has no reason to believe that treatable concentrations of phenol should be present in secondary indium wastewaters, phenol is not selected for limitation.

Cyanide was detected at a concentration of 0.15 mg/l, slightly higher than its treatability concentration of 0.047 mg/l. Cyanide was also detected in the source water ar a concentration of 0.026 mg/l. Its presence in the wastewater is not expected to be due to the process since it is not used as a raw material or produced as a product or intermediate. Treatment for cyanide would result in very little removal since the detected concentration is only slightly higher than the treatability limit. Therefore, cyanide is not selected for limitation.

TOXIC POLLUTANTS SELECTED FOR FURTHER CONSIDERATION IN ESTABLISHING LIMITATIONS AND STANDARDS

The toxic pollutants listed below are selected for further consideration in establishing limitations and standards for this subcategory. The toxic pollutants selected for further consideration for limitation are each discussed following the list.

118. cadmium
119. chromium
122. lead
124. nickel
125. selenium
126. silver
127. thallium
128. zinc

Cadmium was detected above treatability level of 0.049 mg/l. Therefore, cadmium is selected for further consideration for limitation.

Chromium was detected above chromium's treatability concentration of 0.07 mg/l. Therefore, chromium is selected for further consideration for limitation.

Lead was detected above the 0.08 mg/l attainable by identified treatment technology. Because of this finding, lead is selected for further consideration for limitation.

Nickel was found at a concentration greater than nickel's treatability concentration of 0.22 mg/l. Therefore, nickel is selected for further consideration for limitation.

Selenium was detected at a concentration above selenium's treatability concentration of 0.20 mg/l. Selenium, therefore, is selected for further consideration for limitation.

Silver was detected at a concentration higher than the treatability concentration of silver which is 0.07 mg/l. Silver, therefore, is selected for further consideration for limitation.

Thallium was detected at a concentration above its treatability concentration of 0.34 mg/l. Therefore, thallium is selected for further consideration for limitation.

Zinc was detected at a concentration substantially above the treatability concentration of 0.23 mg/l. Zinc, therefore, is selected for further consideration for limitation.

Table VI-1

FREQUENCY OF OCCURRENCE OF PRIORITY POLLUTANTS
SECONDARY INDIUM SUBCATEGORY
RAW WASTEWATER

Pollutant	Analytical Quantification Concentration (mg/l)(a)	Treatable Concentration (mg/l)(b)	Number of Streams Analyzed	Number of Samples Analyzed	ND	Detected Below Quantification Concentration	Detected Below Treatable Concentration	Detected Above Treatable Concentration
1. acenaphthene	0.010	0.010	1	1	1			
2. acrolein	0.010	0.010	1	1	1			
3. acrylonitrile	0.010	0.010	1	1	1			
4. benzene	0.010	0.010	1	1	1			
5. benzidine	0.010	0.010	1	1	1			
6. carbon tetrachloride	0.010	0.010	1	1	1			
7. chlorobenzene	0.010	0.010	1	1	1			
8. 1,2,4-trichlorobenzene	0.010	0.010	1	1	1			
9. hexachlorobenzene	0.010	0.010	1	1	1			
10. 1,2-dichloroethane	0.010	0.010	1	1	1			
11. 1,1,1-trichloroethane	0.010	0.010	1	1	1			
12. hexachloroethane	0.010	0.010	1	1	1			
13. 1,1-dichloroethane	0.010	0.010	1	1	1			
14. 1,1,2-trichloroethane	0.010	0.010	1	1	1			
15. 1,1,2,2-tetrachloroethane	0.010	0.010	1	1	1			
16. chloroethane	0.010	0.010	1	1	1			
17. bis(chloromethyl) ether	0.010	0.010	1	1	1			
18. bis(2-chloroethyl) ether	0.010	0.010	1	1	1			
19. 2-chloroethyl vinyl ether	0.010	0.010	1	1	1			
20. 2-chloronaphthalene	0.010	0.010	1	1	1			
21. 2,4,6-trichlorophenol	0.010	0.010	1	1	1			
22. parachlorometa cresol	0.010	0.010	1	1	1			
23. chloroform	0.010	0.010	1	1	1			
24. 2-chlorophenol	0.010	0.010	1	1	1			
25. 1,2-dichlorobenzene	0.010	0.010	1	1	1			
26. 1,3-dichlorobenzene	0.010	0.010	1	1	1			
27. 1,4-dichlorobenzene	0.010	0.010	1	1	1			
28. 3,3'-dichlorobenzidine	0.010	0.010	1	1	1			
29. 1,1-dichloroethylene	0.010	0.010	1	1	1			
30. 1,2-trans-dichloroethylene	0.010	0.010	1	1	1			
31. 2,4-dichlorophenol	0.010	0.010	1	1	1			
32. 1,2-dichloropropane	0.010	0.010	1	1	1			
33. 1,3-dichloropropylene	0.010	0.010	1	1	1			
34. 2,4-dimethylphenol	0.010	0.010	1	1	1			

Table VI-1 (Continued)

FREQUENCY OF OCCURRENCE OF PRIORITY POLLUTANTS
SECONDARY INDIUM SUBCATEGORY
RAW WASTEWATER

Pollutant	Analytical Quantification Concentration (mg/l)(a)	Treatable Concentration (mg/l)(b)	Number of Streams Analyzed	Number of Samples Analyzed	ND	Detected Below Quantification Concentration	Detected Below Treatable Concentration	Detected Above Treatable Concentration
35. 2,4-dinitrotoluene	0.010	0.010	1	1	1			
36. 2,6-dinitrotoluene	0.010	0.010	1	1	1			
37. 1,2-diphenylhydrazine	0.010	0.010	1	1	1			
38. ethylbenzene	0.010	0.010	1	1	1			
39. fluoranthene	0.010	0.010	1	1	1			
40. 4-chlorophenyl phenyl ether	0.010	0.010	1	1	1			
41. 4-bromophenyl phenyl ether	0.010	0.010	1	1	1			
42. bis(2-chloroisopropyl) ether	0.010	0.010	1	1	1			
43. bis(2-chloroethoxy) methane	0.010	0.010	1	1	1			
44. methylene chloride	0.010	0.010	1	1				1
45. methyl chloride	0.010	0.010	1	1	1			
46. methyl bromide	0.010	0.010	1	1	1			
47. bromoform	0.010	0.010	1	1	1			
48. dichlorobromomethane	0.010	0.010	1	1	1			
49. trichlorofluoromethane	0.010	0.010	1	1	1			
50. dichlorodifluoromethane	0.010	0.010	1	1	1			
51. chlorodibromomethane	0.010	0.010	1	1	1			
52. hexachlorobutadiene	0.010	0.010	1	1	1			
53. hexachlorocyclopentadiene	0.010	0.010	1	1	1			
54. isophorone	0.010	0.010	1	1	1			
55. naphthalene	0.010	0.010	1	1	1			
56. nitrobenzene	0.010	0.010	1	1	1			
57. 2-nitrophenol	0.010	0.010	1	1	1			
58. 4-nitrophenol	0.010	0.010	1	1	1			
59. 2,4-dinitrophenol	0.010	0.010	1	1	1			
60. 4,6-dinitro-o-cresol	0.010	0.010	1	1	1			
61. N-nitrosodimethylamine	0.010	0.010	1	1	1			
62. N-nitrosodiphenylamine	0.010	0.010	1	1	1			
63. N-nitrosodi-n-propylamine	0.010	0.010	1	1	1			
64. pentachlorophenol	0.010	0.010	1	1				1
65. phenol	0.010	0.010	1	1				1
66. bis(2-ethylhexyl) phthalate	0.010	0.010	1	1	1			
67. butyl benzyl phthalate	0.010	0.010	1	1	1			
68. di-n-butyl phthalate	0.010	0.010	1	1		1		

Table VI-1 (Continued)

FREQUENCY OF OCCURRENCE OF PRIORITY POLLUTANTS
SECONDARY INDIUM SUBCATEGORY
RAW WASTEWATER

Pollutant	Analytical Quantification Concentration (mg/l)(a)	Treatable Concentration (mg/l)(b)	Number of Streams Analyzed	Number of Samples Analyzed	ND	Detected Below Quantification Concentration	Detected Below Treatable Concentration	Detected Above Treatable Concentration
69. di-n-octyl phthalate	0.010	0.010	1	1	1			
70. diethyl phthalate	0.010	0.010	1	1		1		
71. dimethyl phthalate	0.010	0.010	1	1		1		
72. benzo(a)anthracene	0.010	0.010	1	1	1			
73. benzo(a)pyrene	0.010	0.010	1	1	1			
74. 3,4-benzofluoranthene	0.010	0.010	1	1	1			
75. benzo(k)fluoranthene	0.010	0.010	1	1	1			
76. chrysene	0.010	0.010	1	1	1			
77. acenaphthylene	0.010	0.010	1	1	1			
78. anthracene (c)	0.010	0.010	1	1	1			
79. benzo(ghi)perylene	0.010	0.010	1	1	1			
80. fluorene	0.010	0.010	1	1	1			
81. phenanthrene (c)	0.010	0.010	1	1	1			
82. dibenzo(a,h)anthracene	0.010	0.010	1	1	1			
83. indeno(1,2,3-cd)pyrene	0.010	0.010	1	1	1			
84. pyrene	0.010	0.010	1	1	1			
85. tetrachloroethylene	0.010	0.010	1	1	1			
86. toluene	0.010	0.010	1	1	1			
87. trichloroethylene	0.010	0.010	1	1	1			
88. vinyl chloride	0.010	0.010	1	1	1			
89. aldrin	0.005	0.010	1	1	1			
90. dieldrin	0.005	0.010	1	1	1			
91. chlordane	0.005	0.010	1	1	1			
92. 4,4'-DDT	0.005	0.010	1	1	1			
93. 4,4'-DDE	0.005	0.010	1	1	1			
94. 4,4'-DDD	0.005	0.010	1	1	1			
95. alpha-endosulfan	0.005	0.010	1	1	1			
96. beta-endosulfan	0.005	0.010	1	1	1			
97. endosulfan sulfate	0.005	0.010	1	1	1			
98. endrin	0.005	0.010	1	1	1			
99. endrin aldehyde	0.005	0.010	1	1	1			
100. heptachlor	0.005	0.010	1	1	1			
101. heptachlor epoxide	0.005	0.010	1	1	1			
102. alpha-BHC	0.005	0.010	1	1	1			
103. beta-BHC	0.005	0.010	1	1		1		

Table VI-1 (Continued)

FREQUENCY OF OCCURRENCE OF PRIORITY POLLUTANTS
SECONDARY INDIUM SUBCATEGORY
RAW WASTEWATER

Pollutant	Analytical Quantification Concentration (mg/l)(a)	Treatable Concentration (mg/l)(b)	Number of Streams Analyzed	Number of Samples Analyzed	ND	Detected Below Quantification Concentration	Detected Below Treatable Concentration	Detected Above Treatable Concentration
104. gamma-BHC	0.005	0.010	1	1	1			
105. delta-BHC	0.005	0.010	1	1	1			
106. PCB-1242 (d)	0.005	0.010	1	1	1			
107. PCB-1254 (d)	0.005	0.010	1	1	1			
108. PCB-1221 (d)	0.005	0.010	1	1	1			
109. PCB-1232 (e)	0.005	0.010	1	1	1			
110. PCB-1248 (e)	0.005	0.010	1	1	1			
111. PCB-1260 (e)	0.005	0.010	1	1	1			
112. PCB-1016 (e)	0.005	0.010	1	1	1			
113. toxaphene	0.005	0.010	1	1	1			
114. antimony	0.100	0.47	1	1		1		
115. arsenic	0.010	0.34	1	1		1		
116. asbestos	10 MFL	10 MFL		0				
117. beryllium	0.010	0.20	1	1			1	
118. cadmium	0.002	0.049	1	1				1
119. chromium	0.005	0.07	1	1				1
120. copper	0.009	0.39	1	1			1	
121. cyanide (f)	0.02	0.047	1	1				1
122. lead	0.020	0.08	1	1				1
123. mercury	0.0001	0.036	1	1		1		
124. nickel	0.005	0.22	1	1				1
125. selenium	0.01	0.20	1	1				1
126. silver	0.02	0.07	1	1				1
127. thallium	0.100	0.34	1	1				1
128. zinc	0.050	0.23	1	1				1
129. 2,3,7,8-tetrachlorodibenzo-p-dioxin (TCDD)	Not Analyzed							

(a) Analytical quantification concentration was reported with the data (see Section V).

(b) Treatable concentrations are based on performance of lime precipitation, sedimentation, and filtration.

(c), (d), (e) Reported together.

(f) Analytical quantification concentration for EPA Method 335.2, Total Cyanide Methods for Chemical Analysis of Water and Wastes, EPA 600/4-79-020, March 1979.

TABLE VI-2

TOXIC POLLUTANTS NEVER DETECTED

1. acenaphthene
2. acrolein
3. acrylonitrile
4. benzene
5. benzidine
6. carbon tetrachloride (tetrachloromethane)
7. chlorobenzene
8. 1,2,4-trichlorobenzene
9. hexachlorobenzene
10. 1,2-dichloroethane
11. 1,1,1-trichloroethane
12. hexachloroethane
13. 1,1-dichloroethane
14. 1,1,2-trichloroethane
15. 1,1,2,2-tetrachloroethane
16. chloroethane
17. bis (chloromethyl) ether (deleted)
18. bis (2-chloroethyl) ether
19. 2-chloroethyl vinyl ether (mixed)
20. 2-chloronaphthalene
21. 2,4,6-trichlorophenol
22. parachlorometa cresol
23. chloroform (trichloromethane)
24. 2-chlorophenol
25. 1,2-dichlorobenzene
26. 1,3-dichlorobenzene
27. 1,4-dichlorobenzene
28. 3,3'-dichlorobenzidine
29. 1,1-dichloroethylene
30. 1,2-trans-dichloroethylene
31. 2,4-dichlorophenol
32. 1,2-dichloropropane
33. 1,2-dichloropropylene (1,3-dichloropropene)
34. 2,4-dimethylphenol
35. 2,4-dinitrotoluene
36. 2,6-dinitrotoluene
37. 1,2-diphenylhydrazine
38. ethylbenzene
39. fluoranthene
40. 4-chlorophenyl phenyl ether
41. 4-bromophenyl phenyl ether
42. bis(2-chloroisopropyl) ether
43. bis(2-choroethoxy) methane
45. methyl chloride (chloromethane)
46. methyl bromide (bromomethane)
47. bromoform (tribromomethane)
48. dichlorobromomethane
49. trichlorofluoromethane (deleted)

TABLE VI-2 (Continued)

TOXIC POLLUTANTS NEVER DETECTED

50. dichlorodifluoromethane (deleted)
51. chlorodibromomethane
52. hexachlorobutadiene
53. hexachlorocyclopentadiene
54. isophorone
55. naphthalene
56. nitrobenzene
57. 2-nitrophenol
58. 4-nitrophenol
59. 2,4-dinitrophenol
60. 4,6-dinitro-o-cresol
61. N-nitrosodimethylamine
62. N-nitrosodiphenylamine
63. N-nitrosodi-n-propylamine
66. bis(2-ethylhexyl) phthalate
67. butyl benzyl phthalate
69. di-n-octyl phthalate
72. benzo (a)anthracene (1,2-benzanthracene)
73. benzo (a)pyrene (3,4-benzopyrene)
74. 3,4-benzofluoranthene
75. benzo(k)fluoranthane (11,12-benzofluoranthene)
76. chrysene
77. acenaphthylene
78. anthracene (a)
79. benzo(ghi)perylene (1,11-benzoperylene)
80. fluorene
81. phenanthrene (a)
82. dibenzo (a,h)anthracene (1,2,5,6-dibenzanthracene)
83. indeno (1,2,3-cd)pyrene (w,e,-o-phenylenepyrene)
84. pyrene
85. tetrachloroethylene
86. toluene
87. trichloroethylene
88. vinyl chloride (chloroethylene)
89. aldrin
90. dieldrin
91. chlordane (technical mixture and metabolites)
92. 4,4'-DDT
93. 4,4,-DDE(p,p'DDX)
94. 4,4 -DDD(p,p'TDE)
95. alpha-endosulfan
96. beta-endosulfan
97. endosulfan sulfate
98. endrin
99. endrin aldehyde

TABLE VI-2 (Continued)

TOXIC POLLUTANTS NEVER DETECTED

100. heptachlor
101. heptachlor epoxide
102. alpha-8HC
104. gamma-8HC (lindane)
105. delta-BHC
106. PCB-1242 (b)
107. PCB-1254 (b)
108. PCB-1221 (b)
109. PCB-1232 (c)
110. PCB-1248 (c)
111. PCB-1260 (c)
112. PCB-1016 (c)
113. toxaphene
116. asbescos (Fibrous)
129. 2,3,7,8-tetra chlorodibenzo-p-dioxin (TCDD)

(a),(b),(c) - Reported together.

SECTION VII

CONTROL AND TREATMENT TECHNOLOGIES

The preceding sections of this supplement discussed the sources, flows, and characteristics of the wastewaters from secondary indium plants. This section summarizes the description of these wastewaters and indicates the treatment technologies which are currently practiced in the secondary indium subcategory for each wastewater stream. Additionally, this section presents the control and treatment technology options which were examined by the Agency for possible application to the secondary indium subcategory.

CURRENT CONTROL AND TREATMENT PRACTICES

This section presents a summary of the control and treatment technologies that are currently being applied to each of the sources generating wastewater in this subcategory. One plant in this subcategory currently practices chemical precipitation and sedimentation. Two options have been selected for consideration for pretreatment and new source standards.

DISPLACEMENT SUPERNATANT

Indium is recovered by dissolving indium-bearing scrap in hydrochloric acid. The indium-rich solution is processed through several displacement steps to remove metallic contaminates and the purified indium precipitated by zinc ions. One indium plant practices chemical precipitation and sedimentation on displacement supernatant.

SPENT ELECTROLYTE

In this process high grade indium is produced by passing a current through an electrolyte so that indium is deposited on the cathode. All spent electrolyte from this process is further processed in the dissolution-precipitation process to recover indium remaining in solution. This is an additional product recovery operation. As a result of this process, spent electrolyte is combined with displacement tank supernatant and treated with chemical precipitation and sedimentation.

CONTROL AND TREATMENT OPTIONS

The Agency examined two control and treatment technology options that are applicable to the secondary indium subcategory. The options selected for evaluation represent end-of-pipe treatment technologies. No wastewater streams which are suitable for the application of flow reduction technology are present in secondary indium refining processes. Therefore, Option B, which includes flow reduction, was not further considered.

OPTION A

The Option A treatment scheme consists of chemical precipitation and sedimentation technology. Specifically, lime or an equivalent alkali is added to precipitate toxic metal ions as metal hydroxides. The metal hydroxides and suspended solids settle out and the sludge is collected. Vacuum filtration is used to dewater sludge.

Due to the large zinc loading in the wastewater, EPA considered the necessity of a two-stage chemical precipitation system at proposal. One stage would include use of an alkaline chemical such as lime, and the second stage would include some other chemical, such as sodium sulfide. Comments received after proposal from the current discharger in this subcategory indicated that the plant would have no difficulty meeting the effluent regulations using lime and settle technology alone. Therefore, EPA decided not to promulgate effluent regulations based on a two-stage precipitation system.

OPTION C

Option C for the secondary indium subcategory consists of all control and treatment requirements of Option A (chemical precipitation and sedimentation) plus multimedia filtration technology added at the end of the Option A treatment scheme. Multimedia filtration is used to remove suspended solids, including precipitates of metals, beyond the concentration attainable by gravity sedimentation. The filter suggested is of the gravity, mixed-media type, although other forms of filters, such as rapid sand filters or pressure filters would perform satisfactorily. The addition of filters also provides consistent removal during periods of time in which there are rapid increases in flows or loadings of pollutants to the treatment system.

Due to the large zinc loading in the wastewater, EPA considered the necessity of a two-stage chemical precipitation system at proposal. One stage would include use of an alkaline chemical such as lime, and the second stage would include some other chemical, such as sodium sulfide. Comments received after proposal from the current discharger in this subcategory indicated that the plant would have no difficulty meeting the effluent regulations using lime and settle technology alone. Therefore, EPA decided not to promulgate effluent regulations based on a two-stage precipitation system.

SECTION VIII

COSTS. ENERGY, AND NONWATER QUALITY ASPECTS

This section presents a summary of compliance costs for the secondary indium subcategory and a description of the treatment options and subcategory-specific assumptions used to develop these estimates. Together with the estimated pollutant reduction performance presented in Sections XI and XII of this supplement, these cost estimates provide a basis for evaluating each regulatory option. These cost estimates are also used in determining the probable economic impact of regulation on the subcategory at different pollutant discharge levels. In addition, this section addresses nonwater quality environmental impacts of wastewater treatment and control alternatives. including air pollution, solid wastes, and energy requirements, which are specific to the secondary indium subcategory.

TREATMENT OPTIONS FOR EXISTING SOURCES

As discussed in Section VII, two treatment options have been considered for existing secondary indium sources. The treatment schemes for each option are summarized below and schematically presented in Figures XI-1 and XI-2 (pages 5495 and 5496).

OPTION A

Option A consists of chemical precipitation and sedimentation end-of-pipe technology.

Due to the large zinc loading in the wastewater, EPA considered the necessity of a two-stage chemical precipitation system at proposal. One stage would include use of an alkaline chemical such as lime, and the second stage would include some other chemical, such as sodium sulfide. Comments received after proposal from the current discharger in this subcategory indicated that the plant would have no difficulty meeting the effluent regulations using lime and settle technology alone. Therefore, EPA decided not to promulgate effluent regulations based on a two-stage precipitation system.

OPTION C

Option C consists of chemical precipitation, sedimentation, and multimedia filtration end-of-pipe treatment technology.

Due to the large zinc loading in the wastewater, EPA considered the necessity of a two-stage chemical precipitation system at proposal. One stage would use of an alkaline precipitant, such as lime, and the second stage would use another precipitant, such as sodium sulfide. Comments received after proposal from the current discharger in this subcategory indicated that the plant would have no difficulty meeting the effluent limitations using

lime and settle technology alone. Therefore, EPA decided not to promulgate effluent regulations based on a two-stage precipitation system.

COST METHODOLOGY

A detailed discussion of the methodology used to develop the compliance costs is presented in Section VIII of Vol. I. Promulgation cost estimates did not change from those developed for the proposed regulation. These cost estimates are presented in Table VIII-1(page 5483).

Each subcategory may contain a unique set of wastewater streams requiring certain subcategory-specific assumptions to develop compliance costs. The major assumption specific to the secondary indium subcategory is:

(1) Information was made available indicating the indium concentration in the raw wastewater to be 130,000 mg/l. Lime and settle and lime, settle, and filter long term achievable concentrations of 0.084 and 0.07 mg/l, respectively, were used in the costing process.

NONWATER QUALITY ASPECTS

Nonwater quality impacts specific to the secondary indium subcategory, including energy requirements, solid waste and air pollution are discussed below.

ENERGY REQUIREMENTS

The methodology used for determining the energy requirements for the various options is discussed in Section VIII of the General Development Document. Energy requirements for Option A are estimated at 5,900 kwh/yr. Option C, which includes filtration, is estimated to increase energy consumption over Option A by approximately 25 percent. Further, the total energy requirement for Option C is approximately 1 percent of the estimated total plant energy usage. It is therefore concluded that the energy requirements of the treatment options considered will have no significant impact on total plant energy consumption.

SOLID WASTE

Sludge generated in the secondary indium subcategory is due to the precipitation of metal hydroxides and carbonates using lime or other chemicals. Sludges associated with the secondary indium subcategory will necessarily contain quantities of toxic metal pollutants. Wastes generated by secondary metal industries can be regulated as hazardous. However, the Agency examined the solid wastes that would be generated at secondary nonferrous metals manufacturing plants by the suggested treatment technologies and believes they are not hazardous wastes under the

Agency's regulations implementing Section 3001 of the Resource Conservation and Recovery Act. None of the secondary indium subcategory wastes are listed specifically as hazardous. Nor are they likely to exhibit a characteristic of hazardous waste. This judgment is based on the recommended technology of chemical precipitation, sedimentation, and filtration. By the addition of a small excess of lime during treatment, similar sludges, specifically toxic metal-bearing sludges, generated by other industries such as the iron and steel industry passed the Extraction Procedure (EP) toxicity test. See 40 CFR §261.24. Thus, the Agency believes that the wastewater sludges will similarly not be EP toxic if the recommended technology is applied.

Although it is the Agency's view that solid wastes generated as a result of these guidelines are not expected to be hazardous, generators of these wastes must test the waste to determine if the wastes meet any of the characteristics of hazardous waste (see 40 CFR 262.11).

If these wastes should be identified or are listed as hazardous, they will come within the scope of RCRA's "cradle to grave" hazardous waste management program, requiring regulation, from the point of generation to point of final disposition. EPA's generator standards would require generators of hazardous nonferrous metals manufacturing wastes to meet containerization, labeling, recordkeeping, and reporting requirements; if plants dispose of hazardous wastes off-site, they would have to prepare a manifest which would track the movement of the wastes from the generator's premises to a permitted off-site treatment, storage, or disposal facility. See 40 CFR 262.20, 45 FR 33142 (May 19, 1980), as amended at 45 FR 86973 (December 31, 1980). The transporter regulations require transporters of hazardous wastes to comply with the manifest system to assure that the wastes are delivered to a permitted facility. See 40 CFR 263.20, 45 FR 33151 (May 19, 1980), as amended at 45 FR 86973 (December 31, 1980). Finally, RCRA regulations establish standards for hazardous waste treatment, storage, and disposal facilities allowed to receive such wastes. See 40 CFR Part 464, 46 FR 2802 (January 12, 1981), and 47 FR 32274 (July 26, 1982).

Even if these wastes are not identified as hazardous, they still must be disposed of in compliance with the Subtitle D open dumping standards, implementing Section 4004 of RCRA. See 44 FR 53438 (September 13, 1979). The Agency has calculated as part of the costs for wastewater treatment the cost of hauling and disposing of these wastes. It is estimated that 170 metric tons per year of sludge will be generated as a result of the promulgated PSES for the secondary indium subcategory.

AIR POLLUTION

There is no reason to believe that any substantial air pollution problems will result from implementation of chemical

precipitation, sedimentation, and multimedia filtration. These technologies transfer pollutants to solid waste and are not likely to transfer pollutants to air.

Table VIII-1

COST OF COMPLIANCE FOR THE SECONDARY INDIUM SUBCATEGORY
INDIRECT DISCHARGERS

(March, 1982 Dollars)

Option	Total Required Capital Cost	Total Annual Cost

These costs are not presented here because the data on which they are based have been claimed to be confidential.

THIS PAGE INTENTIONALLY LEFT BLANK

SECTION IX

BEST PRACTICABLE CONTROL TECHNOLOGY CURRENTLY AVAILABLE

EPA is not promulgating effluent limitations based on best practicable control technology currently available (BPT) for the secondary indium subcategory at this time because there are no existing direct dischargers in this subcategory.

SECTION X

BEST AVAILABLE TECHNOLOGY ECONOMICALLY ACHIEVABLE

EPA is not promulgating effluent limitations based on best available technology economically achievable (BAT) for the secondary indium subcategory at this time because there are no existing direct dischargers in this subcategory.

THIS PAGE INTENTIONALLY LEFT BLANK

SECTION XI

NEW SOURCE PERFORMANCE STANDARDS

The basis for new source performance standards (NSPS) is the best available demonstrated technology (BDT). New plants have the opportunity to design the best and most efficient production processes and wastewater treatment technologies without facing the added costs and restrictions encountered in retrofitting an existing plant. Therefore EPA has considered the best demonstrated process changes, in-plant controls, and end-of-pipe treatment technologies which reduce pollution to the maximum extent feasible as the basis for NSPS.

TECHNICAL APPROACH TO NSPS

New source performance standards are based on the most effective and beneficial technologies currently available. The Agency reviewed and evaluated a wide range of technology options. The Agency elected to examine two technology options, applied to combined wastewater streams, which could be applied to the secondary indium subcategory as alternatives for the basis of NSPS effluent limitations.

Treatment technologies considered for the NSPS options are summarized below:

OPTION A (Figure XI-1, page 5495) is based on:

- Chemical precipitation and sedimentation

OPTION C (Figure XI-2, page 5496) is based on:

- Chemical precipitation and sedimentation
- Multimedia filtration

As explained in Section IV, the secondary indium subcategory has been subdivided into two potential wastewater sources. Since the water use, discharge rates, and pollutant characteristics of each of these wastewaters is potentially unique, effluent limitations will be developed for each of the two subdivisions.

For each of the subdivisions, a specific approach was followed for the development of new source performance standards. The first requirement to calculate these standards is to account for production and flow variability from plant to plant. Therefore, a unit of production or production normalizing parameter (PNP) was determined for each waste stream which could then be related to the flow from the process to determine a production normalized flow. Selection of the PNP for each process element is discussed in Section IV. Each plant within the subcategory was then analyzed to determine which subdivisions were present, specific flow rates generated for each subdivision, and the specific production normalized flows for each subdivision. This analysis

is discussed in detail in Section V. Nonprocess wastewater such as rainfall runoff and noncontact cooling water is not considered in the analysis.

Production normalized flows for each subdivision were analyzed to determine which flow was to be used as part of the basis for NSPS. The selected flow (sometimes referred to as a NSPS regulatory flow or NSPS discharge flow) reflects the water use controls which are common practices within the industry. The NSPS normalized flow is based on the average of all applicable data. Nothing was found to indicate that the wastewater flows and characteristics of new plants would not be similar to those from existing plants, since the processes used by new sources are not expected to differ from those used at existing sources.

The second requirement to calculate mass limitations is the set of concentrations that are achievable by application of the NSPS level of treatment technology. Section VII discusses the various control and treatment technologies which are currently in place for each wastewater source. The current control and treatment technology consists of chemical precipitation and sedimentation (lime and settle) technology.

Using these regulatory flows and the achievable concentrations, the next step is to calculate mass loadings for each wastewater source or subdivision. This calculation was made on a stream-by-stream basis, primarily because plants in this subcategory may perform one or more of the operations in various combinations. The mass loadings (milligrams of pollutant per metric ton of production - mg/kkg) were calculated by multiplying the NSPS regulatory flow (l/kkg) by the concentration achievable by the NSPS level of treatment technology (mg/l) for each pollutant parameter to be limited under NSPS. These mass loadings are published in the Federal Register and in CFR Part 421 as the effluent limitations.

The mass loadings which are allowed under NSPS for each plant will be the sum of the individual mass loadings for the various wastewater sources which are found at particular plants. Accordingly, all the wastewater generated within a plant may be combined for treatment in a single or common treatment system, but the effluent limitations for these combined wastewaters are based on the various wastewater sources which actually contribute to the combined flow. This method accounts for the variety of combinations of wastewater sources and production processes which may be found at secondary indium plants.

The Agency usually establishes wastewater limitations in terms of mass rather than concentration. This approach prevents the use of dilution as a treatment method (except for controlling pH). The production normalized wastewater flow (l/kkg) is a link between the production operations and the effluent limitations. The pollutant discharge attributable to each operation can be calculated from the normalized flow and effluent concentration achievable by the treatment technology and summed to derive an

appropriate limitation for each subcategory.

INDUSTRY COST AND POLLUTANT REMOVAL ESTIMATES

As one means of evaluating each technology option. EPA developed estimates of the pollutant removal and the compliance costs associated with each option. The methodologies are described below.

POLLUTANT REMOVAL ESTIMATES

Since there are no existing direct dischargers in the secondary indium subcategory, the estimated pollutant removal analysis was only carried out for indirect dischargers.

Sampling data collected during the field sampling program were used to characterize the major waste streams considered for regulation. At each sampled facility, the sampling data was production normalized for each unit operation (i.e., mass of pollutant generated per mass of product manufactured). This value, referred to as the raw waste was used to estimate the mass of toxic pollutants generated within the secondary indium subcategory. The pollutant removal estimates were calculated for each plant by first estimating the total mass of each pollutant in the untreated wastewater. This was calculated by first multiplying the raw waste values by the corresponding production value for that stream and then summing these values for each pollutant for every stream generated by the plant.

The volume of wastewater discharged after the application of each treatment option was estimated for each operation at each plant by comparing the actual discharge to the regulatory flow. The smaller of the two values was selected and summed with the other plant flows. The mass of pollutant discharged was then estimated by multiplying the achievable concentration values attainable with the option (mg/l) by the estimated volume of process wastewater discharged by the subcategory. The mass of pollutant removed is the difference between the estimated mass of pollutant generated within the subcategory and the mass of pollutant discharged after application of the treatment option. The pollutant removal estimates for indirect dischargers in the secondary indium subcategory are presented in Table XII-1 (page 5501).

COMPLIANCE COSTS

In estimating subcategory-wide compliance costs, the first step was to develop a cost estimation model, relating the total costs associated with installation and operation of wastewater treatment technologies to plant process wastewater discharge. EPA applied the model to each plant. The plant's investment and operating costs are determined by what treatment it has in place and by its individual process wastewater discharge flow. As discussed above, this flow is either the actual or the NSPS regulatory flow, whichever is lesser. The final step was to

annualize the capital costs, and to sum the annualized capital costs, and the operating and maintenance costs for each plant, yielding the cost of compliance for the subcategory (See Table XII-2, page 5502). These costs were used in assessing economic achievability.

NSPS OPTION SELECTION - PROPOSAL

EPA proposed that the best available demonstrated technology for the secondary indium subcategory be equivalent to Option C (chemical precipitation, sedimentation, and multimedia filtration). The pollutants and pollutant parameters specifically proposed for limitation under NSPS were cadmium, lead, zinc, indium. total suspended solids. and pH. The Agency believed that the proposed NSPS were economically achievable, and would not have a detrimental impact on new plants in this subcategory.

Due to the large zinc loading in the wastewater, EPA considered the necessity of a two-stage chemical precipitation and sedimentation system at proposal. One stage would use an alkali such as lime, and the second stage would use another chemical, such as sodium sulfide.

NSPS OPTION SELECTION - PROMULGATION

EPA is promulgating that NSPS for the secondary indium subcategory be based on Option A, chemical precipitation and sedimentation. The end-of-pipe treatment configuration for the NSPS option selected is presented in Figure XI-1 (page 5495). The pollutants and pollutant parameters specifically promulgated for limitation under NSPS are cadmium, lead, zinc, indium, total suspended solids and pH. The toxic pollutants chromium, nickel, selenium, silver. and thallium were also considered for regulation because they are present at treatable concentrations in the raw wastewaters from this subcategory. These pollutants were not selected for specific regulation because they will be effectively controlled when the regulated priority metals are treated to the concentrations achievable by the model technology.

The toxic metal pollutants cadmium, lead, and zinc, as well as the nonconventional metal pollutant indium, are specifically limited to ensure the control of the excluded priority metal pollutants. These pollutants are indicators of the performance of the treatment technology.

These NSPS are equivalent to PSES technology. We believe that the promulgated NSPS are economically achievable, and will not have a detrimental impact on the entry of new plants into this subcategory.

The proposed NSPS model technology was lime precipitation, sedimentation, and filtration. Since the addition of a filter would only remove an additional 0.2 kg/yr of toxic pollutants, the Agency determined that the costs involved do not warrant selection of filtration as part of the NSPS model technology. At

proposal, EPA considered the necessity of a two-stage chemical precipitation system. One stage would include use of an alkaline chemical such as lime, and the second stage would include some other chemical, such as sodium sulfide. Comments received after proposal from the current discharger in this subcategory indicated that the plant would have no difficulty meeting the effluent regulations using lime and settle technology alone. Therefore, EPA decided not to promulgate effluent regulations based on a two-stage precipitation system.

WASTEWATER DISCHARGE RATES

A NSPS discharge rate is calculated for each subdivision based on the average of the flows of the existing plants, as determined from analysis of dcp data. The discharge rate is used with the achievable treatment concentrations to determine NSPS. Since the discharge rate may be different for each wastewater source, separate production normalized discharge rates for each of the two wastewater sources are discussed below and summarized in Table XI-1 (page 5493). The discharge rates are normalized on a production basis by relating the amount of wastewater generated to the mass of the product which is produced by the process associated with the waste stream in question. These production normalizing parameters, or PNPs, are also listed in Table XI-1.

Section V of this document further describes the discharge flow rates and presents water use and discharge flow rates for each plant by subdivision in Tables V-1 and V-2.

DISPLACEMENT SUPERNATANT

The proposed and promulgated NSPS wastewater discharge rate for displacement tank supernatant is 6,190 l/kkg (1,483 gal/ton) of indium produced. Indium production is measured as the amount recovered in the displacement tanks and does not include the amount recovered electrolytically. This rate is allocated to those plants which recover indium from scrap via a dissolution-precipitation process. Water use and discharge rates are presented in Table V-1.

SPENT ELECTROLYTE

The proposed and promulgated NSPS wastewater discharge rate for spent electrolyte is 35,800 l/kkg (8,579 gal/ton) of cathode indium produced. This rate is allocated to those plants which recover indium from scrap using an electrolytic refining process. Water use and discharge rates are presented in Table V-2. The NSPS flow is based on the rate at the only plant reporting this waste stream.

REGULATED POLLUTANT PARAMETERS

The raw wastewater concentrations from individual operations and the subcategory as a whole were examined to select certain pollutant parameters for limitation. This examination and

evaluation was presented in Section VI. A total of six pollutants or pollutant parameters are selected for limitation under NSPS and are listed below:

118. cadmium
122. lead
128. zinc
indium
TSS
pH

The Agency has chosen not to regulate all eight toxic metals selected in Section VI for further consideration.

The high cost associated with analysis for priority metal pollutants has prompted EPA to develop an alternative method for regulating and monitoring priority pollutant discharges from the nonferrous metals manufacturing category. Rather than developing specific effluent mass limitations and standards for each of the priority metals found above treatable concentrations in the raw wastewater from a given subcategory, the Agency is promulgating effluent mass limitations only for those pollutants generated in the greatest quantities as shown by the pollutant removal analysis.

By establishing limitations and standards for certain toxic metal pollutants, dischargers will attain the same degree of control over toxic metal pollutants as they would have been required to achieve had all the toxic metal pollutants been directly limited.

This approach is technically justified since the treatable concentrations used for chemical precipitation and sedimentation technology are based on optimized treatment for concomitant multiple metals removal. Thus, even though metals have somewhat different theoretical solubilities, they will be removed at very nearly the same rate in a chemical precipitation and sedimentation treatment system operated for multiple metals removal.

NEW SOURCE PERFORMANCE STANDARDS

The treatable concentrations achievable by application of the promulgated NSPS are discussed in Section VII of this supplement. These treatable concentrations (both one day maximum and monthly average values) are multiplied by the NSPS normalized discharge flows summarized in Table XI-1 to calculate the mass of pollutants allowed to be discharged per mass of product. The results of these calculations in milligrams of pollutant per kilogram of product represent the new source performance standards and are presented in Table XI-2 (page 5494) for each individual waste stream.

TABLE XI-1

NSPS WASTEWATER DISCHARGE RATES FOR THE SECONDARY INDIUM SUBCATEGORY

Wastewater Stream	NSPS Normalized Discharge Rate l/kkg	gal/ton	Production Normalizing Parameter
Displacement Supernatant	6,190	1,483	indium produced
Spent Electrolyte	35,800	8,579	cathode indium produced

TABLE XI-2

NSPS FOR THE SECONDARY INDIUM SUBCATEGORY

(a) Displacement Supernatant NSPS

Pollutant or pollutant property	Maximum for any one day	Maximum for monthly average
	mg/kg (lb/million lbs) of indium produced	
*Cadmium	2.105	0.929
Chromium	2.724	1.114
*Lead	2.600	1.238
Nickel	11.880	7.861
Selenium	7.614	3.405
Silver	2.538	1.052
Thallium	12.690	5.633
*Zinc	9.037	3.776
*Indium	2.724	1.114
*TSS	253.800	120.700
*pH	Within the range of 7.5 to 10.0 at all times	

(b) Spent Electrolyte NSPS

Pollutant or pollutant property	Maximum for any one day	Maximum for monthly average
	mg/kg (lb/million lbs) of cathode indium produced	
*Cadmium	12.170	5.370
Chromium	15.750	6.444
*Lead	15.040	7.160
Nickel	68.740	45.470
Selenium	44.030	19.690
Silver	14.680	6.086
Thallium	73.390	32.580
*Zinc	52.270	21.840
*Indium	15.750	6.444
*TSS	1,468.000	698.100
*pH	Within the range of 7.5 to 10.0 at all times	

*Regulated Pollutant

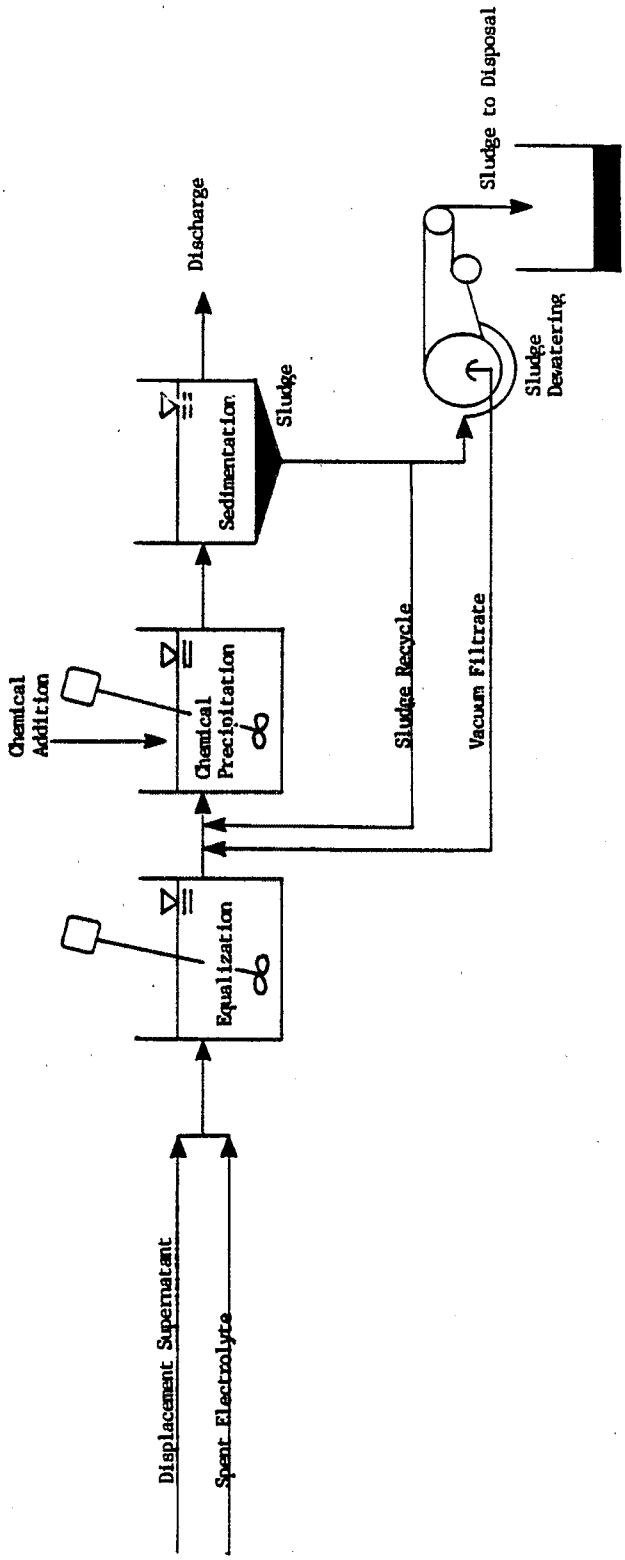

Figure XI-1

NSPS TREATMENT SCHEME FOR OPTION A

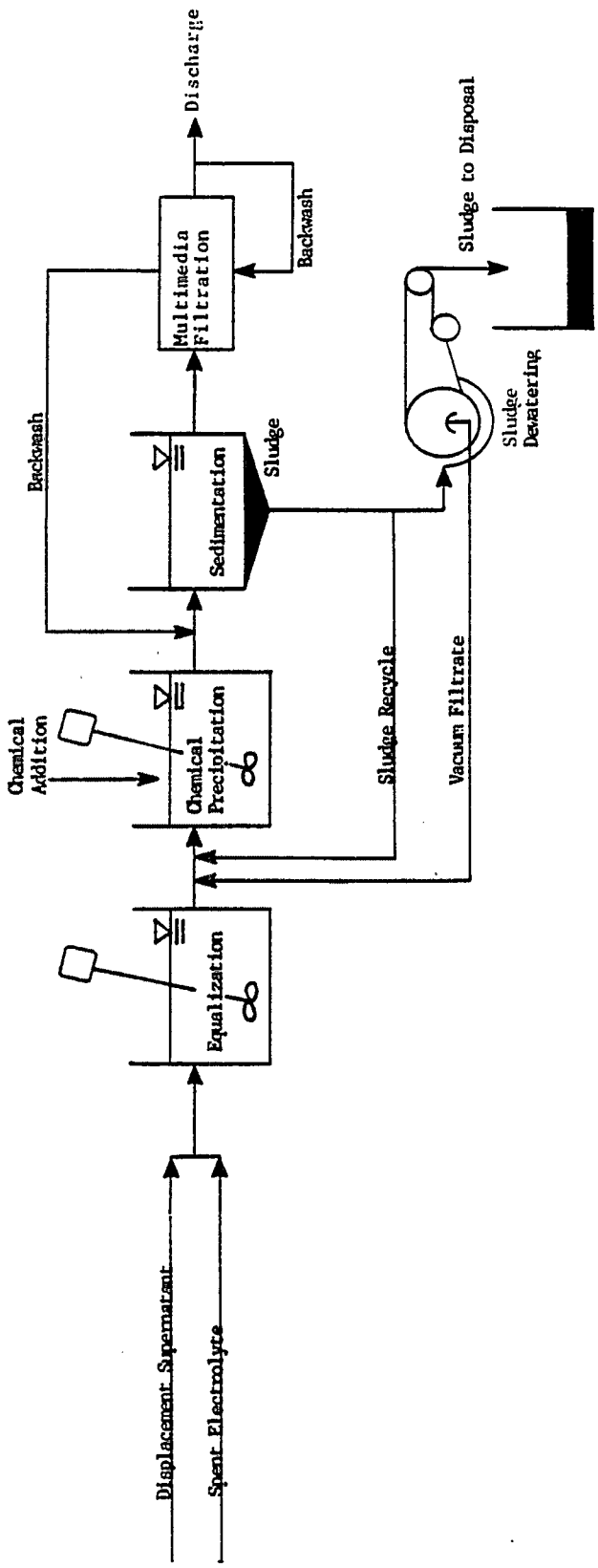

Figure XI-2

NSPS TREATMENT SCHEME FOR OPTION C

SECTION XII

PRETREATMENT STANDARDS

This section describes the control and treatment technologies for pretreatment of process wastewaters from existing sources and new sources in the secondary indium subcategory. PSES are designed to prevent the discharge of pollutants which pass through, interfere with, or are otherwise incompatible with the operation of publicly owned treatment works (POTW). The Clean Water Act requires pretreatment for pollutants, such as toxic metals, that limit POTW sludge management alternatives. New indirect discharge facilities, like new direct discharge facilities, have the opportunity to incorporate the best available demonstrated technologies, including process changes, in-plant controls, and end-of-pipe treatment technologies, and to use plant site selection to ensure adequate treatment system installation. Pretreatment standards are to be technology based, analogous to the best available or best demonstrated technology for removal of toxic pollutants. Pretreatment standards for regulated pollutants are presented based on the selected control and treatment technology.

TECHNICAL APPROACH TO PRETREATMENT

Before proposing and promulgating pretreatment standards, the Agency examines whether the pollutants discharged by the industry pass through the POTW or interfere with the POTW operation or its chosen sludge disposal practices. In determining whether pollutants pass through a well-operated POTW achieving secondary treatment, the Agency compares the percentage of a pollutant removed by POTW with the percentage removed by direct dischargers applying the best available technology economically achievable. A pollutant is deemed to pass through the POTW when the average percentage removed nationwide by well-operated POTW meeting secondary treatment requirements, is less than the percentage removed by direct dischargers complying with BAT effluent limitations guidelines for that pollutant.

This definition of pass through satisfies the two competing objectives set by Congress that standards for indirect dischargers be equivalent to standards or direct dischargers while at the same time the treatment capability and performance of the POTW be recognized and taken into account in regulating the discharge of pollutants from indirect dischargers.

The Agency compares percentage removal rather than the mass or concentration of pollutants discharged because the latter would not take into account the mass of pollutants discharged to the POTW from non-industrial sources or the dilution of the pollutants in the POTW effluent to lower concentrations due to the addition of large amounts of non-industrial wastewater.

INDUSTRY COST AND POLLUTANT REMOVAL ESTIMATES

The industry cost and pollutant removal estimates of each treatment option were used to determine the most cost-effective option. The methodology applied in calculating pollutant removal estimates and plant compliance costs is discussed in Section XI. Table XII-1 (page 5501) shows the estimated pollutant removal estimates for indirect dischargers. Compliance costs for indirect dischargers are presented in Table XII-2 (page 5502).

PRETREATMENT STANDARDS FOR EXISTING AND NEW SOURCES

Options for pretreatment of wastewaters from both existing and new sources are based on increasing the effectiveness of end-of-pipe treatment technologies. All in-plant changes and applicable end-of-pipe treatment processes have been discussed previously in Section XI. The options for PSNS and PSES, therefore, are the same as the NSPS options discussed in Section XI. A description of each option is presented below.

Treatment technologies considered for the PSNS and PSES options are listed below and shown schematically in Figures XI-1 and XI-2 (pages 5495 and 5496)

OPTION A

- Chemical precipitation and sedimentation

OPTION C

- Chemical precipitation and sedimentation
- Multimedia filtration

PSES OPTION SELECTION - PROPOSAL

EPA proposed PSES for the secondary indium subcategory based on Option A, chemical precipitation and sedimentation. The pollutants specifically proposed for regulation under PSES were cadmium. lead, zinc, and indium.

Implementation of the proposed PSES limitations was estimated to remove 586 kg of toxic metals and 288 kg of indium annually.

Due to the large zinc loading in the wastewater, EPA considered the necessity of a two-stage chemical precipitation system at proposal.

PSES OPTION SELECTION - PROMULGATION

EPA is promulgating PSES for this subcategory based on Option A, chemical precipitation and sedimentation. The pollutants specifically regulated under PSES are cadmium, lead, zinc, and indium. The toxic pollutants chromium, nickel, selenium, silver, and thallium were also considered for regulation because they are

present at treatable concentrations in the raw wastewaters from this subcategory. These pollutants were not selected for specific regulation because they will be effectively controlled when the regulated toxic metals are treated to the concentrations achievable by the model technology. We are promulgating PSES to prevent pass-through of cadmium, lead, zinc, and indium. These toxic pollutants are removed by a well-operated POTW at an average of 30 percent while PSES technology removes approximately 99 percent.

The wastewater discharge rates for promulgated PSES are identical to the promulgated NSPS discharge rates for each waste stream. The PSES discharge rates are shown in Table XII-3 (page 5503).

Implementation of the promulgated PSES limitations would remove annually an estimated 586 kg of toxic metals and 288 kg of indium.

At proposal, EPA considered the necessity of a two-stage chemical precipitation system. Comments received after proposal indicated that plants would have no difficulty meeting the effluent regulations using lime and settle technology alone. Therefore, EPA decided not to promulgate effluent regulations based on a two-stage precipitation system.

PSNS OPTION SELECTION - PROPOSAL

EPA proposed PSNS for the secondary indium subcategory based on Option C, chemical precipitation, sedimentation, and multimedia filtration.

The wastewater discharge rates proposed for PSNS were equivalent to the proposed NSPS discharge rates. No flow reduction measures for PSNS were considered feasible.

PSNS OPTION SELECTION - PROMULGATION

EPA is promulgating PSNS based on Option A, chemical precipitation and sedimentation technology. The proposed PSNS model technology included filtration. Since the addition of a filter would only remove an additional 0.2 kg/yr of toxic pollutants, the Agency determined that the costs involved do not warrant selection of filtration as part of the PSNS model technology. The same pollutants pass through at PSNS as at PSES, for the same reasons. The PSNS flow allowances are based on minimization of process wastewater wherever possible.

We believe that the promulgated PSNS are achievable, and that they are not a barrier to entry of new plants into this subcategory.

The wastewater discharge rates for PSNS are identical to the NSPS discharge rates for each waste stream. The PSNS discharge rates are shown in Table XII-3 (page 5503).

PRETREATMENT STANDARDS

Pretreatment standards for existing sources are based on the achievable concentrations from the selected treatment technology, (Option A), and the discharge rates determined in Section XI for NSPS (see Table XII-3 for discharge rates for PSES and PSNS). A mass of pollutant per mass of product (mg/kg) allocation is given for each subdivision within the subcategory. This pollutant allocation is based on the product of the treatable concentration from the promulgated treatment (mg/l) and the production normalized wastewater discharge rate (l/kkg). Because PSNS and NSPS are both based on Option A, the achievable treatment concentrations for NSPS are identical to those for PSNS.

Table XII-1

POLLUTANT REMOVAL ESTIMATES
SECONDARY INDIUM SUBCATEGORY
INDIRECT DISCHARGERS

Pollutant	Raw Waste (kg/yr)	Option A Discharge (kg/yr)	Option A Removed (kg/yr)	Option C Discharge (kg/yr)	Option C Removed (kg/yr)
Antimony	0.0092	0.0055	0.0037	0.0053	0.0039
Arsenic	0	0	0	0	0
Cadmium	5.7560	0.0207	5.7353	0.0124	5.7436
Chromium (Total)	0.3454	0.0220	0.3234	0.0177	0.3276
Copper	0.0403	0.0239	0.0164	0.0231	0.0172
Cyanide (Total)	0.0432	0.0256	0.0175	0.0248	0.0184
Lead	1.2663	0.0314	1.2349	0.0202	1.2461
Mercury	0	0	0	0	0
Nickel	0.1151	0.0684	0.0467	0.0557	0.0594
Selenium	0.1813	0.0785	0.1028	0.0506	0.1307
Silver	0.2245	0.0262	0.1983	0.0177	0.2068
Thallium	3.1658	0.1309	3.3049	0.0860	3.0798
Zinc	575.6000	0.0864	575.5136	0.0582	525.5418
TOTAL PRIORITY POLLUTANTS	586.7471	0.5196	586.2275	0.3718	586.3752
Fluoride	0.0029	0.0017	0.0012	0.0017	0.0012
Indium	287.8000	0.2618	287.5382	0.1754	287.6246
TOTAL NONCOVENTIONALS	287.8029	0.2635	287.5394	0.1771	287.6258
TSS	4,317.0000	3.1417	4,313.8583	0.6580	4,316.3420
Oil and Grease	0	0	0	0	0
TOTAL CONVENTIONALS	4,317.0000	3.1417	4,313.8583	0.6580	4,316.3420
TOTAL POLLUTANTS	5,191.5499	3.9247	5,187.6252	1.2069	5,190.3430

TABLE XII-2

COST OF COMPLIANCE FOR THE
SECONDARY INDIUM SUBCATEGORY
INDIRECT DISCHARGERS

(March 1982 Dollars)

Option	Total Required Capital Cost	Total Annual Cost

These costs are not presented here because the data on which they are based have been claimed to be confidential.

TABLE XII-3

PSES AND PSNS WASTEWATER DISCHARGE RATES FOR THE SECONDARY INDIUM SUBCATEGORY

Wastewater Stream	PSES and PSNS Normalized Discharge Rate l/kkg	gal/ton	Production Normalizing Parameter
Displacement Supernatant	6,190	1,483	indium produced
Spent Electrolyte	35,800	8,579	cathode indium produced

TABLE XII-4

PSES FOR THE SECONDARY INDIUM SUBCATEGORY

(a) Displacement Supernatant PSES

Pollutant or pollutant property	Maximum for any one day	Maximum for monthly average
	mg/kg (lb/million lbs) of indium produced	
*Cadmium	2.105	0.929
Chromium	2.724	1.114
*Lead	2.600	1.238
Nickel	11.880	7.861
Selenium	7.614	3.405
Silver	2.538	1.052
Thallium	12.690	5.633
*Zinc	9.037	3.776
*Indium	2.724	1.114

(b) Spent Electrolyte PSES

Pollutant or pollutant property	Maximum for any one day	Maximum for monthly average
	mg/kg (lb/million lbs) of cathode indium produce	
*Cadmium	12.170	5.370
Chromium	15.750	6.444
*Lead	15.040	7.160
Nickel	68.740	45.470
Selenium	44.030	19.690
Silver	14.680	6.086
Thallium	73.390	32.580
*Zinc	52.270	21.840
*Indium	15.750	6.444

*Regulated Pollutant

TABLE XII-5

PSNS FOR THE SECONDARY INDIUM SUBCATEGORY

(a) Displacement Supernatant PSNS

Pollutant or pollutant property	Maximum for any one day	Maximum for monthly average
	mg/kg (lb/million lbs) of indium produced	
*Cadmium	2 105	0.929
Chromium	2.724	1 114
*Lead	2.600	1.238
Nickel	11.880	7.861
Selenium	7.614	3.405
Silver	2.538	1.052
Thallium	12.690	5.633
*Zinc	9.037	3.776
*Indium	2.724	1.114

(b) Spent Electrolyte PSNS

Pollutant or pollutant property	Maximum for any one day	Maximum for monthly average
	mg/kg (lb/million lbs) of cathode indium produced	
*Cadmium	12.170	5.370
Chromium	15.750	6.444
*Lead	15.040	7.160
Nickel	68.740	45.470
Selenium	44.030	19.690
Silver	14.680	6.086
Thallium	73.390	32.580
*Zinc	52.270	21.840
*Indium	15.750	6.444

*Regulated Pollutant

THIS PAGE INTENTIONALLY LEFT BLANK

SECTION XIII

BEST CONVENTIONAL POLLUTANT CONTROL TECHNOLOGY

EPA is not promulgating best conventional pollutant control technology (BCT) for the secondary indium subcategory at this time.

THIS PAGE INTENTIONALLY LEFT BLANK