United States
Environmental Protection
Agency

Office of Water Regulations
and Standards (WH-552)
Industrial Technology Division
Washington, DC 20460

EPA 440/1-89-019.2
May 1989

Office of Water

EPA

Development Document for Effluent Limitations Guidelines and Standards for the Nonferrous Metals Manufacturing Point Source Category

FINAL

Volume II
Bauxite Refining
Primary Aluminum Smelting
Secondary Aluminum Smelting

Printed on Recycled Paper

ORGANIZATION OF THIS DOCUMENT

This development document for the nonferrous metals manufacturing category consists of a general development document which considers the general and overall aspects of the regulation and 31 subcategory specific supplements. These parts are organized into 10 volumes as listed below.

The information in the general document and in the supplements is organized by sections with the same type of information reported in the same section of each part. Hence to find information on any specific aspect of the category one would need only look in the same section of the general document and the specific supplements of interest.

The ten volumes contain contain the following subjects:

Volume I	General Development Document
Volume II	Bauxite Refining Primary Aluminum Smelting Secondary Aluminum Smelting
Volume III	Primary Copper Smelting Primary Electrolytic Copper Refining Secondary Copper Refining Metallurgical Acid Plants
Volume IV	Primary Zinc Primary Lead Secondary Lead Primary Antimony
Volume V	Primary Precious Metals and Mercury Secondary Precious Metals Secondary Silver Secondary Mercury
Volume VI	Primary Tungsten Secondary Tungsten and Cobalt Primary Molybdenum and Rhenium Secondary Molybdenum and Vanadium
Volume VII	Primary Beryllium Primary Nickel and Cobalt Secondary Nickel Secondary Tin
Volume VIII	Primary Columbium and Tantalum Secondary Tantalum Secondary Uranium
Volume IX	Primary and Secondary Titanium Primary Zirconium and Hafnium
Volume X	Primary and Secondary Germanium and Gallium Primary Rare Earth Metals Secondary Indium

DEVELOPMENT DOCUMENT

for

EFFLUENT LIMITATIONS GUIDELINES AND STANDARDS

for the

NONFERROUS METALS MANUFACTURING POINT SOURCE CATEGORY

VOLUME II

Bauxite Refining
Primary Aluminum Smelting
Secondary Aluminum Smelting

William K. Reilly
Administrator

Rebecca Hanmer, Acting
Assistant Administrator for Water

Martha Prothro, Director
Office of Water Regulations and Standards

Thomas P. O'Farrell, Director
Industrial Technology Division

Ernst P. Hall, P.E., Chief
Metals Industry Branch
and
Technical Project Officer

May 1989

U.S. Environmental Protection Agency
Office of Water
Office of Water Regulations and Standards
Industrial Technology Division
Washington, D. C. 20460

TABLE OF CONTENTS

Supplement	Page
Bauxite Refining	505
Primary Aluminum Smelting	591
Secondary Aluminum Smelting	859

For detailed contents see detailed contents list in individual supplement.

NONFERROUS METALS MANUFACTURING POINT SOURCE CATEGORY

DEVELOPMENT DOCUMENT SUPPLEMENT

for the

Bauxite Refining Subcategory

William K. Reilly
Administrator

Rebecca Hanmer
Acting Assistant Administrator for Water

Martha Prothro, Director
Office of Water Regulations and Standards

Thomas P. O'Farrell, Director
Industrial Technology Division

Ernst P. Hall, P.E., Chief
Metals Industry Branch
and
Technical Project Officer

May 1989

U.S. Environmental Protection Agency
Office of Water
Office of Water Regulations and Standards
Industrial Technology Division
Washington, D. C. 20460

TABLE OF CONTENTS

Section		Page
I	SUMMARY AND CONCLUSIONS	513
II	RECOMMENDATIONS	517
III	INDUSTRY PROFILE	519
	Description of Bauxite Refining Processes	519
	Raw Materials	520
	Bauxite Grinding and Digestion	520
	Red Mud Removal and Liquor Purification	521
	Precipitation and Classification	522
	Calcination	523
	Process Wastewater Sources	524
	Other Wastewater Sources	524
	Age, Production, and Process Profile	524
IV	SUBCATEGORIZATION	531
	Factors Considered in Subcategorization	531
	Factors Considered in Subdividing The Bauxite Refining Subcategory	531
	Other Factors	532
	Type of Plant	532
	Raw Materials	532
	Plant Location	533
V	WATER USE AND WASTEWATER CHARACTERISTICS	535
	Wastewater Characteristics Data	536
	Data Collection Portfolios	536
	Field Sampling Data	536
	Wastewater Characteristics and Flows by Building Block	538
	Digestor Condensate	538
	Barometric Condenser Effluent	538
	Carbonation Plant Effluent	538
	Mud Impoundment Effluent	539

TABLE OF CONTENTS (Continued)

Section		Page
VI	SELECTION OF POLLUTANT PARAMETERS	555
	Conventional and Nonconventional Pollutant Parameters	555
	Conventional and Nonconventional Pollutant Parameters Selected	555
	Toxic Priority Pollutants	556
	Toxic Pollutants Never Detected	556
	Toxic Pollutants Never Found Above Their Analytical Quantification Level	558
	Toxic Pollutants Present Below Concentrations Achievable by Treatment	559
	Toxic Pollutants Detected in a Small Number of Sources	559
	Toxic Pollutants Selected for Further Consideration for Limitation	559
VII	CONTROL AND TREATMENT TECHNOLOGIES	569
	Current Control and Treatment Practices	569
	Mud Impoundment Effluent	569
	Control and Treatment Options	570
	Option E	570
VIII	COSTS OF WASTEWATER TREATMENT AND CONTROL	571
	Treatment Options Costs for Existing Sources	571
	Option E	571
	Cost Methodology	571
	Nonwater Quality Aspects	572
	Energy Requirements	572
	Solid Waste	572
	Air Pollution	572
IX	BEST PRACTICABLE TECHNOLOGY CURRENTLY AVAILABLE	575

TABLE OF CONTENTS (Continued)

Section		Page
X	BEST AVAILABLE TECHNOLOGY ECONOMICALLY ACHIEVABLE	577
	Technical Approach to BAT	577
	Option E	577
	Industry Cost and Pollutant Removal Estimates	579
	Pollutant Removal Estimates	579
	Compliance Costs	579
	BAT Option Selection	579
	Regulated Pollutant Parameters	580
	Effluent Limitations	581
	Recommended Guidance for BAT	581
	Effluent Limitations for the Bauxite Refining Subcategory	581
XI	NEW SOURCE PERFORMANCE STANDARDS	585
	Technical Approach to NSPS	585
	Option E	585
	NSPS Option Selection	586
	Regulated Pollutant Parameters	586
	New Source Performance Standards	586
	Recommended Guidance for NSPS for the Bauxite Refining Subcategory	586
XII	PRETREATMENT STANDARDS	587
XIII	BEST CONVENTIONAL POLLUTANT CONTROL TECHNOLOGY	589

LIST OF TABLES

Tables	Title	Page
III-1	Initial Operating Year (Range) Summary of Plants in the Bauxite Refining Subcategory by Discharge Type	527
III-2	Production Ranges for the Bauxite Refining Subcategory	528
III-3	Summary of Bauxite Refining Subcategory Processes and Associated Waste Streams	526
V-1	Water Use and Discharge Rates for Mud Impoundment Effluent (liters/yr)	540
V-2	Bauxite Refining Subcategory Digester Condensate Sampling Data	541
V-3	Bauxite Refining Subcategory Barometric Condenser (Hot Well) Discharge Raw Wastewater Sampling Data	544
V-4	Bauxite Refining Subcategory Carbonation Plant Effluent Raw Wastewater Sampling Data	547
V-5	Bauxite Refining Subcategory Mud Lake Discharge Raw Wastewater Sampling Data	549
VI-1	Frequency of Occurrence of Priority Pollutants Bauxite Refining Raw Wastewater	561

LIST OF TABLES (Continued)

Tables	Title	Page
VI-2	Toxic Pollutants Never Detected	568
VI-3	Toxic Pollutants Never Found Above Their Quantification Level	567
VIII-1	Cost of Compliance for the Bauxite Refining Subcategory Direct Dischargers	573
X-1	Pollutant Removal Estimates Bauxite Refining Subcategory	582
X-2	Cost of Compliance for the Bauxite Refining Subcategory	583

LIST OF FIGURES

Figures	Title	Page
III-1	Bauxite Refining Process	527
III-2	Geographic Locations of the Bauxite Refining Subcategory Plants	529
V-1	Sampling Sites at Bauxite Refining Plant A	552
V-2	Sampling Sites at Bauxite Refining Plant B	553
X-1	Option E Treatment Scheme for the Bauxite Refining Subcategory	584

SECTION I

SUMMARY AND CONCLUSIONS

On April 8, 1974, EPA promulgated effluent limitations based on best practicable technology currently available (BPT) and best available technology economically achievable (BAT), standards of performance for new sources (NSPS) and pretreatment standards for new sources (PSNS). In each case, the limitations and standards required no discharge of process wastewater pollutants with an allowance for discharge of monthly net precipitation (i.e., the difference in water volume between precipitation and evaporation in a one month period) that accumulates in the impoundments used by bauxite refineries to store the undigested solids produced in the refining process. This document and the administrative record provides the technical basis for review of the promulgated effluent limitations and standards.

The bauxite refining subcategory consists of 8 plants. Of the 8 plants, three discharge directly to rivers, lakes, or streams and five achieve zero discharge of process wastewater.

EPA first studied the bauxite refining subcategory to determine whether differences in raw materials, final products, manufacturing processes, equipment, age and size of plants, or water usage, required the development of separate effluent limitations and standards for different segments of the subcategory. This involved a detailed analysis of wastewater discharge and treated effluent characteristics, including (1) the sources and volume of water used, the processes used, and the sources of pollutants and wastewaters in the plant; and (2) the constituents of wastewaters, including priority pollutants. As a result, four subdivisions have been identified for this subcategory that warrant separate effluent limitations. These include:

- Digester Condensate
- Barometric Condenser Effluent
- Carbonation Plant Effluent
- Mud Impoundment Effluent

EPA also identified several distinct control and treatment technologies (both in-plant and end-of-pipe) applicable to the bauxite refining subcategory. The Agency analyzed both historical and newly generated data on the performance of these technologies, including the non-water quality environmental impacts and air quality, solid waste generation, and energy requirements. EPA also studied flow reduction

reported in the data collection portfolios (dcp) and plant visits.

Engineering costs were prepared for each discharging plant (and one zero discharger) for the control and treatment option considered for the subcategory. These costs were then used by the Agency to estimate the impact of implementing the option in the subcategory. For this control and treatment option, the number of potential closures, number of employees affected, and impact on price were estimated. These results are reported in a separate document entitled "The Economic Impact Analysis of Proposed Effluent Limitations Guidelines and Standards for the Nonferrous Smelting and Refining Industry."

After examining the various treatment technologies being operated in the subcategory, the Agency has identified BPT to be equivalent to the existing promulgated BPT effluent limitations published on April 8, 1974 (40 CFR Part 421 Subpart A). This requires no discharge of process wastewater pollutants to navigable waters, while permitting the discharge of net precipitation from red mud lake impoundments. Minor amendments to the regulatory language are promulgated to clarify references to fundamentally different factors (FDF) considerations under 40 CFR Part 125 and references to pretreatment standards under 40 CFR Part 128. As a result, the bauxite refining subcategory will not incur any incremental capital or annual costs to comply with the BPT limitations.

For BAT, the Agency considered revising the promulgated BAT to include treatment of the allowable discharge of net precipitation from mud impoundments by pH adjustment and activated carbon adsorption technology for removal of organic pollutants. This potential revision was based on new data collected by the Agency since the previous promulgation that indicated the presence of phenolic compounds at treatable concentrations in the mud impoundment effluent. Since proposal the Agency has received newly collected data for the red mud lakes showing levels below the limit of detection for all phenolic compounds except phenol. As a result, the Agency has decided not to establish additional national effluent limitations guidelines and standards for this subcategory but rather to recommend guidance to permitting authorities to deal with any site-specific high levels of phenolics.

The technical basis of NSPS is equivalent to the existing promulgated BAT. In selecting NSPS, EPA recognizes that new plants have the opportunity to implement the best and most efficient manufacturing processes and treatment technology. However, no such processes or treatment technology were considered to meet the NSPS criteria. Therefore, the technology basis of BAT has been determined as the best demonstrated technology, the technology basis of NSPS. The Agency was also considering the application of pH adjustment and activated

carbon adsorption technology to the mud impoundment effluent for new sources. The Agency is not revising the promulgated NSPS, but is recommending guidance to permitting authorities to deal with any site-specific high levels of phenolics.

The limitations and standards for BPT, BAT, NSPS, and PSNS are presented in Section II.

THIS PAGE INTENTIONALLY LEFT BLANK

SECTION II

RECOMMENDATIONS

EPA is not changing the existing promulgated BPT for the bauxite refining subcategory. The regulation establishes no discharge of process wastewater pollutants with an allowance for discharge of net precipitation from the mud impoundment. The technology basis for BPT is impoundment and recycle for all process wastewater.

EPA is not substantially modifying the existing promulgated BAT limitations. However, the Agency is providing guidance in Section X for the control of phenolics.

Similar to BAT, EPA is not substantially modifying the existing promulgated NSPS, but is recommending guidance in section XI for the control of phenolics.

EPA is not promulgating PSES limitations for the bauxite refining subcategory because there are no existing indirect dischargers.

EPA is not modifying the existing promulgated PSNS since it is unlikely that any new bauxite sources could be constructed as indirect dischargers.

EPA is not promulgating best conventional pollutant control technology (BCT) limitations at this time.

THIS PAGE INTENTIONALLY LEFT BLANK

SECTION III

INDUSTRY PROFILE

This section of the bauxite refining supplement describes the raw materials and processes used in refining bauxite to produce alumina and presents a profile of the alumina plants identified in this study. For a discussion of the purpose, authority, and methodology for this study and a general description of the non-ferrous metals manufacturing category, refer to Section III of the General Development Document.

EPA promulgated effluent limitations for BPT and BAT, new source performance standards, and pretreatment standards for new sources for the bauxite refining subcategory on April 8, 1974 as Subpart A of 40 CFR Part 421. The pollutants considered in the development of those regulations included alkalinity, pH, total dissolved solids, total suspended solids, and sulfate.

The Clean Water Act of 1977 mandates the achievement of effluent limitations requiring the application of BAT for toxic pollutants. In keeping with this emphasis on toxic pollutants, EPA is re-examining the discharge of toxic pollutants from process wastewater impoundments in the bauxite refining subcategory.

Most of the alumina produced by bauxite refiners is sold to the primary aluminum industry. Aluminum metal is widely used for building and construction materials, transportation equipment, and containers and packaging products. The remainder of the alumina is sold to the chemical, abrasive, ceramic, and refractory industries for the manufacture of products such as chemical alums, activated alumina, polishes, electrical insulators, and heat exchange media.

DESCRIPTION OF BAUXITE REFINING PROCESSES

Bauxite is the only ore of aluminum used commercially in the United States. Aluminum production is unique among metal manufacturing techniques in that nearly all purification is accomplished in the bauxite refining process. No significant removal of impurities occurs during the subsequent reduction to metal.

In the United States, bauxite is refined using the Bayer process. The classic Bayer process may be broadly divided into four major operations:

1. Bauxite grinding and digestion,
2. Red mud removal and liquor purification,
3. Precipitation and classification, and

4. Calcination.

A variation of the process, known as the combination process, allows additional alumina recovery from solid residues when high-silica bauxites are used as the raw material.

Bauxite refining is characteristically conducted in very large scale installations. The process is conducted in an essentially closed circuit with extensive reuse and recycle of process water. Economic considerations make the maximum recovery of heat and reagents a necessity. Production processes for the bauxite refining subcategory are presented schematically in Figure III-1 (page 527) and described in detail below.

RAW MATERIALS

Bauxite consists of hydrated aluminum oxide and various impurities, including iron oxide, titanium dioxide, silicon dioxide, and compounds of phosphorus and vanadium. A basic distinction is made between monohydrate bauxite, which contains alumina in the form of boehmite or diaspore (Al_2O3 H_2O), and trihydrate bauxite, in the form of gibbsite ($Al_2O_3 \cdot 3H_2O$ or $Al(OH)_3$), because they require different digestion conditions. Further distinctions of ore type include high or low silica content, high or low iron content, and fast- or slow-settling red mud after digestion.

BAUXITE GRINDING AND DIGESTION

Bauxite ore is crushed and wet-ground with a caustic-rich solution in preparation for the digestion process. The bauxite must be ground finely enough to ensure effective digestion but not so finely that the red mud residue presents problems during settling and filtration. One plant reports the use of scrubbers for dust control in the bauxite handling operations. Because the water from these scrubbers is returned to the process to recover the bauxite value, it is considered to be a process water stream rather than a wastewater stream.

The ground bauxite slurry is fed to digesters where the hydrated alumina in the bauxite is converted to a soluble salt, sodium aluminate. The reaction is accomplished using either sodium hydroxide or a combination of lime and sodium carbonate. Wastewater from wet air pollution control on lime kilns at two plants is sent to the digesters. Because the scrubber effluent is returned to the process and not discharged, it is considered to be a process water stream rather than a wastewater stream.

Digestion conditions (temperature, pressure, and caustic concentration) depend on the type of bauxite processed. Monohydrate bauxites require temperatures between 200 and 250°C at up to 35 atm pressure. Trihydrate bauxites can be digested under the more moderate conditions of 120 to 170°C and 3 to 5 atm pressure.

The product of the digestion process is a slurry containing sodium aluminate in aqueous solution and undissolved solids. This slurry enters a system of expansion vessels or "flash tanks" for cooling, pressure reduction, and heat recovery. The stream recovered from the expansion process is returned to the digesters to provide some of the heat needed to maintain proper digestion temperatures. Condensate from the vapor is frequently used for boiler water. At one plant condensate is used for hydrate washing. Excess condensate or condensate which is unsuitable for use in boilers may be disposed of.

RED MUD REMOVAL AND LIQUOR PURIFICATION

The digested bauxite suspension contains solid, insoluble bauxite particles of various sizes and compositions in a sodium aluminate solution. Particles above a certain size, e.g., 100 microns, are called "sand" and may include undigested bauxite, quartz particles, or common sand. Sand is usually removed from the suspension before red mud thickening.

The insoluble residue remaining in suspension after desanding is commonly known as red mud. Red mud contains iron oxides, titanium dioxide, aluminum present with silica, and other secondary impurities. A flocculating agent is added to the process suspension to enhance settling of the fine red mud particles.

The overflow from the mud settling and thickening steps is further clarified by filtration. This step removes red mud particles from the supersaturated aluminate liquor.

The red mud settled from the process liquor is thickened, washed, and sometimes filtered to recover caustic and alumina values. The mud is then moved as a waterborne slurry to a waste area known as a red mud lake or impoundment for disposal.

When high-silica bauxites such as those from Arkansas are used as the raw material for alumina production, the "combination process" can be applied to recover alumina and sodium values which would otherwise be lost in the red mud. As much as one-third of the total alumina value produced by a plant using Arkansas bauxite may be trapped in insoluble sodium aluminosilicates which are removed from the process with the red mud.

In the combination process, the red mud is treated first by filtration to reduce the evaporative load and then by sintering and leaching to recover alumina. After filtering and washing, the remaining solid residue or "brown mud" is sent to a mud lake for disposal. The very pure filtrate, known as white liquor, is either combined with the process stream or precipitated and calcined separately to produce chemical-grade alumina.

Red muds from various bauxites have different characteristics

which produce differing disposal considerations. For example, the yield of red mud residue from Surinam bauxite is low (approximately 1/3 kkg per kkg of alumina product), and the mud is amenable to filtration and effective washing on a filter. Thus, the final residue is relatively easy to handle and disposal area requirements are moderate. On the other hand, red muds from Arkansas and Jamaican bauxites are produced in much greater yield, (approximately 2 kkg and 1 kkg per kkg of alumina, respectively), because of their larger content of contaminants. The physical characteristics of Jamaican bauxite red mud are such that filtration is difficult and countercurrent decantation may be required. It also settles poorly, reaching a solids concentration of only about 30 percent after normal settling as compared to more than 50 percent solids for the muds from other ores. As a result, area requirements for these red mud lakes are large.

One company which refines Jamaican bauxite has developed a sand bed filtration technique. In this technique, red mud is pumped to a drying bed where the solids concentration of the mud is increased from 15 or 20 percent to more than 50 percent. The surface of the mud drying bed is kept dry by drawing water off the top and, at one of the two plants using sand bed filtration, pumping it to a "clear lake." Underflow is also drawn out through the sandy bottom of the bed and sent to the clear lake. Clear lake water is then recycled to the bauxite refining operations for use as process water, forming a nearly-closed water system. The second plant that practices sand bed filtration of red mud wastes does not have a clear lake, practices no recycle of mud lake water to the process, and discharges neutralized effluent directly to surface waters.

Of the alumina plants which do not practice sand bed filtration of red mud, all report the use of red mud lakes. In addition, a refinery may have a process water lake for recycle of higher quality water than is found in the mud lake and a storm water lake to collect large volumes of rainwater runoff from the plant site. Minor remaining storage capacity in abandoned red mud lakes may be utilized to dispose of small quantities of aqueous wastes which are intolerable in the recycle circuit. Examples of such wastes are spent acids from equipment cleaning and the effluent from salting-out evaporators.

PRECIPITATION AND CLASSIFICATION

The purified sodium aluminate solution obtained by removing solid impurities from the digested liquor passes through heat exchangers and is cooled before being discharged into large precipitation vessels. Vapor produced in the flash cooling area is condensed and reused in other parts of the plant.

During precipitation, aluminum hydroxide crystallizes from the super-saturated sodium aluminate in the presence of seed crystals. The precipitation conditions are carefully controlled so that the solids formed will be amenable to easy separation and

washing. The precipitated hydrate crystals are classified by size; small crystals are washed and fed to calcining furnaces. Aluminum trihydrate scale can also be recovered from the precipitators and processed to make an activated alumina by-product.

The spent liquor separated from the hydrate crystals during classification is returned to the grinding and digestion processes to recover the caustic value of the stream. The spent caustic is first heated in heat exchangers by the steam recovered from the flash cooling of the process liquor before precipitation. The liquor then passes through evaporators which remove excess water. The caustic is thus reconcentrated before being mixed with the bauxite ore in the digesters.

The vapor generated in the spent caustic evaporators is condensed in barometric condensers using once-through cooling water. Although occasional upsets may cause entrainment of caustic, the barometric condensate, also referred to as hotwell discharge, from properly operated evaporators is generally a high quality water which is either impounded with the red mud or discharged directly to surface waters.

Some provision must be made to bleed off a part of the recycled caustic to prevent the accumulation of soluble salts in the system. In some plants, one of the evaporators is a "salting-out" evaporator which concentrates a portion of the recycled caustic stream. The concentrated stream is then disposed of in an old mud lake or a landfill.

An alternate method of removing salts is to mix some of the spent liquor with the slurry from the digesters. The soluble contaminants are removed by the red mud which is then filtered out and discarded. This technique of salt removal has been demonstrated in only one plant and may not be possible with red mud from all bauxite ore types.

One plant removes soluble salts from the process by carbonating a small amount of pregnant liquor from the precipitation process and some of the hydrate seed. An alumina precipitate is settled from the carbonated mixture and calcined. The recovered sodium aluminate is then returned to the process at the mixing and digestion operation. The solution from which the alumina was precipitated contains neutralized soluble impurities and is directly discharged without further treatment.

CALCINATION

The moist filter cake of aluminum oxide from the precipitation and classification operations is conveyed to calciners where it is converted to anhydrous alumina, the form most suitable for later use in electrolytic reduction to aluminum metal. Dust control for the calciners is provided by electrostatic precipitators or baghouse filters.

One plant dries part of the hydrate filter cake rather than exposing it to the more severe conditions of calcination. The product of this operation is sold as a dried hydrate. Condensate from the dryers is collected and reused in the precipitation process.

PROCESS WASTEWATER SOURCES

A variety of processes are involved in bauxite refining. The significant wastewater sources that are associated with this subcategory can be subdivided as follows:

1. Digester condensate,
2. Barometric condenser effluent,
3. Carbonation plant effluent, and
4. Mud impoundment effluent.

OTHER WASTEWATER SOURCES

There are other waste streams associated with the bauxite refining subcategory. These waste streams include, but are not limited to:

1. Stormwater other than that which falls within the process water impoundment area, and
2. Maintenance and cleanup water.

These waste streams are not considered as a part of this rulemaking. EPA believes that the flows and pollutant loadings associated with these waste streams are insignificant relative to the waste streams selected, or are best handled by the appropriate permit authority on a case-by-case basis under authority of Section 403 of the Clean Water Act.

AGE, PRODUCTION, AND PROCESS PROFILE

Figure III-2 (page 529) shows the location of the eight alumina plants operating in the United States. This figure shows that the plants are located in the southern states and in the U.S. Virgin Islands.

Table III-1 (page 524) summarizes the relative age and discharge status of the eight alumina plants. Most of the plants are between 20 and 40 years old. None of the alumina plants are more than 50 years old.

Table III-2 (page 525) lists the 1982 production ranges for the alumina plants. Four of the eight plants produce 200,000 to 300,000 kkg/yr as aluminum contained. Two plants produce less than 200,000 kkg/yr, and the remaining two produce more than 400,000 kkg/yr as aluminum contained.

Table III-3 (page 526) lists the major production processes associated with the refining of bauxite. Also shown is the number of plants generating wastewater from these processes.

Table III-1

INITIAL OPERATING YEAR (RANGE) SUMMARY OF PLANTS
IN THE BAUXITE REFINING SUBCATEGORY BY DISCHARGE TYPE

Initial Operating Year - Range (Plant Age - years)

Type of Discharge No. of Plants	1982-1963 (0-20)	1962-1953 (20-30)	1952-1943 (30-40)	1942-1933 (40-50)	Before 1932 (<50)	Total
Direct	0	2	1	0	0	3
Indirect	0	0	0	0	0	0
Zero	1	1	2	1	0	5
TOTAL	1	3	3	1	0	8

Table III-2

PRODUCTION FOR THE BAUXITE REFINING SUBCATEGORY

Alumina Production[1] (1982)

Type of Discharge	0-200	200-300	300-400	400-600	Total
Direct	0	3	0	0	3
Indirect	0	0	0	0	0
Zero	2	1	0	2	5
Total	2	4	0	2	8

[1] In thousands kkg/yr of contained aluminum

Table III-3

SUMMARY OF BAUXITE REFINING PROCESSES AND ASSOCIATED WASTE STREAMS

Process	No. Plants with Process	No. Plants with Wastewater
Bauxite grinding and digestion	8	
-Digester condensate	4	4
Red mud removal and liquor purification	8	
-Mud impoundment effluent	3	3
Precipitation and classification	8	
-Barometric condenser effluent	5	5
- Carbonation plant effluent	1	1
Calcination	8	

NOTE: Through reuse or evaporation practices, a plant may generate a wastewater from a process but not have a discharge of that wastewater.

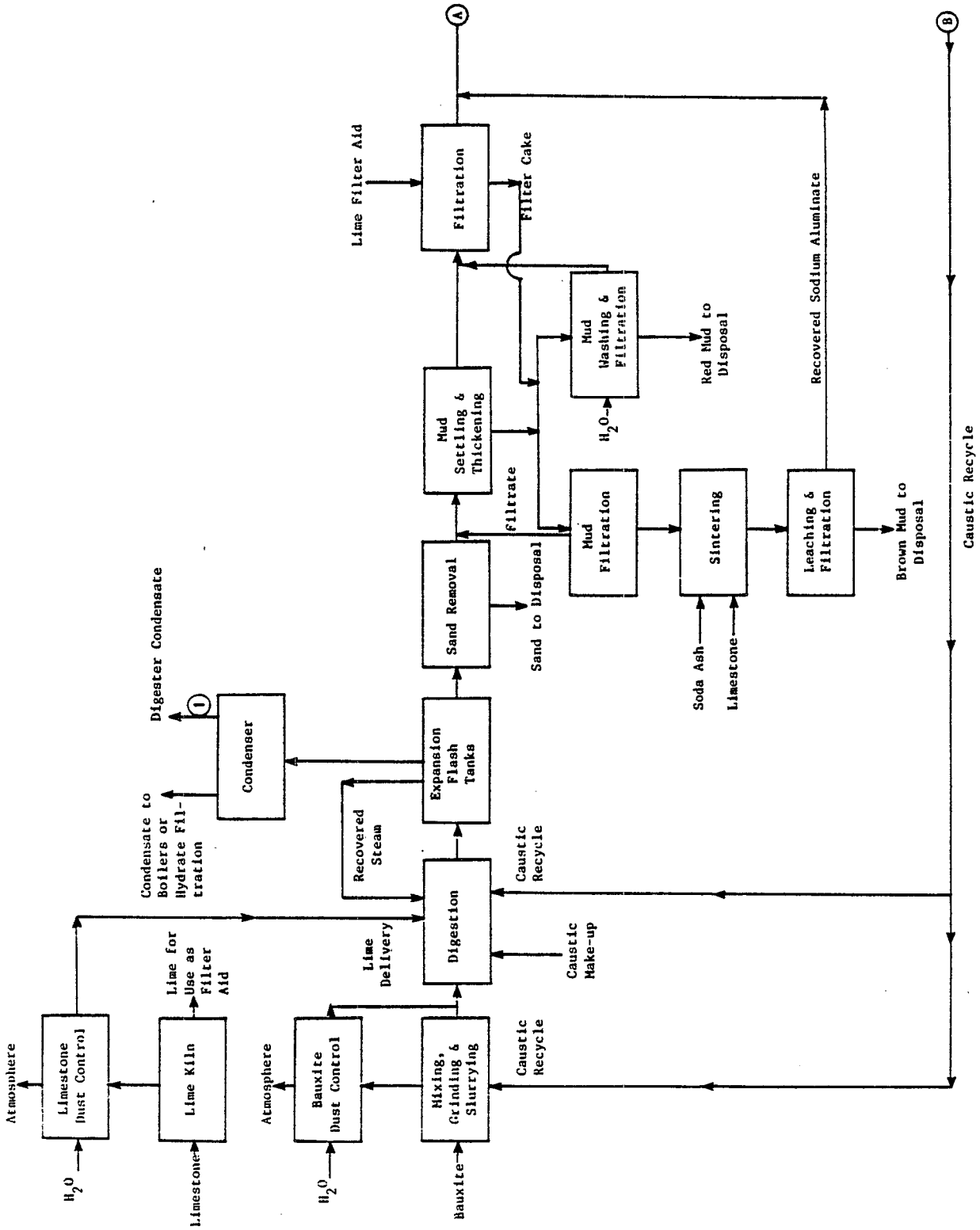

Figure III-1

BAUXITE REFINING PROCESS

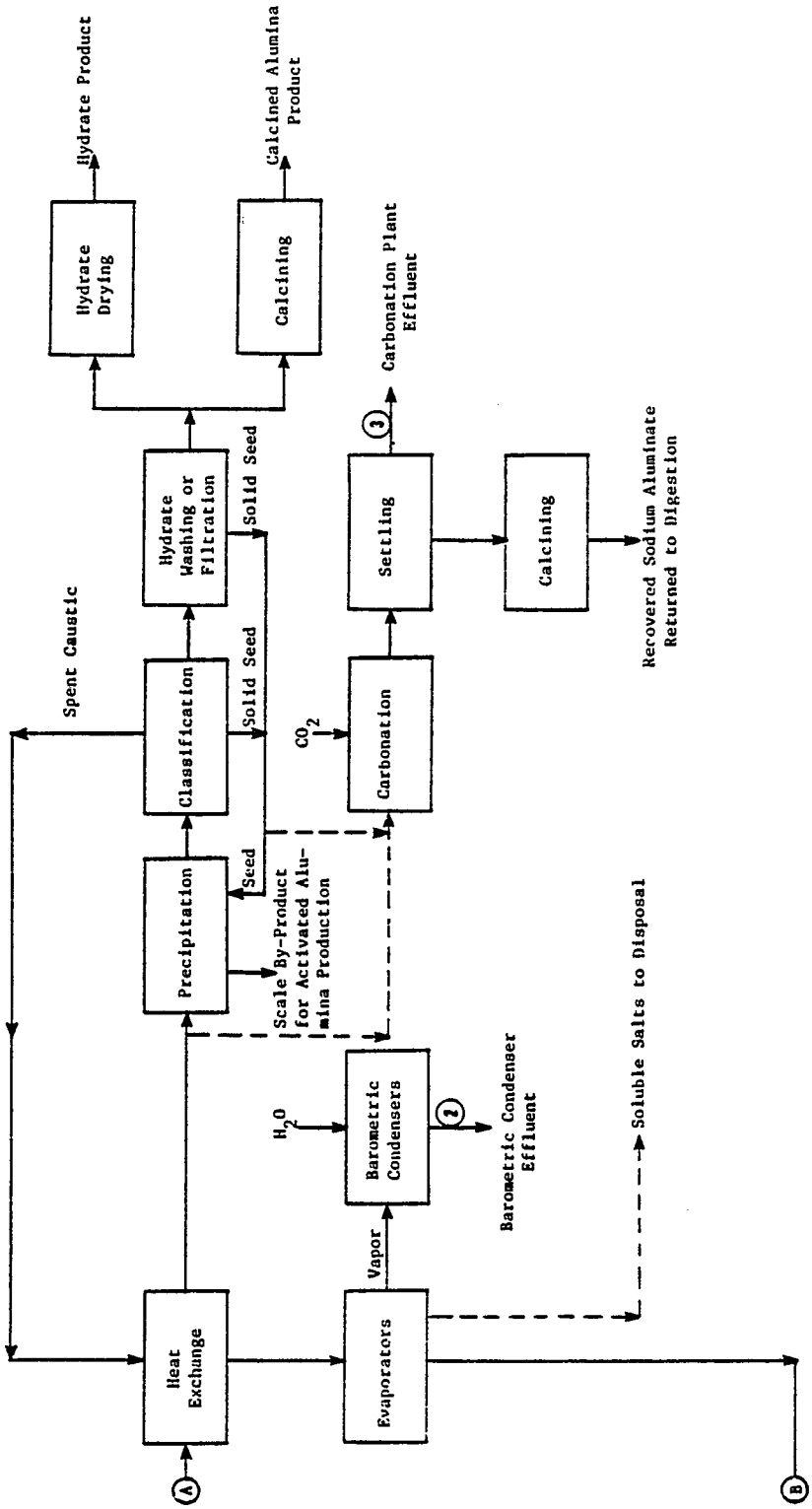

Figure III-1 (Continued)

BAUXITE REFINING PROCESS

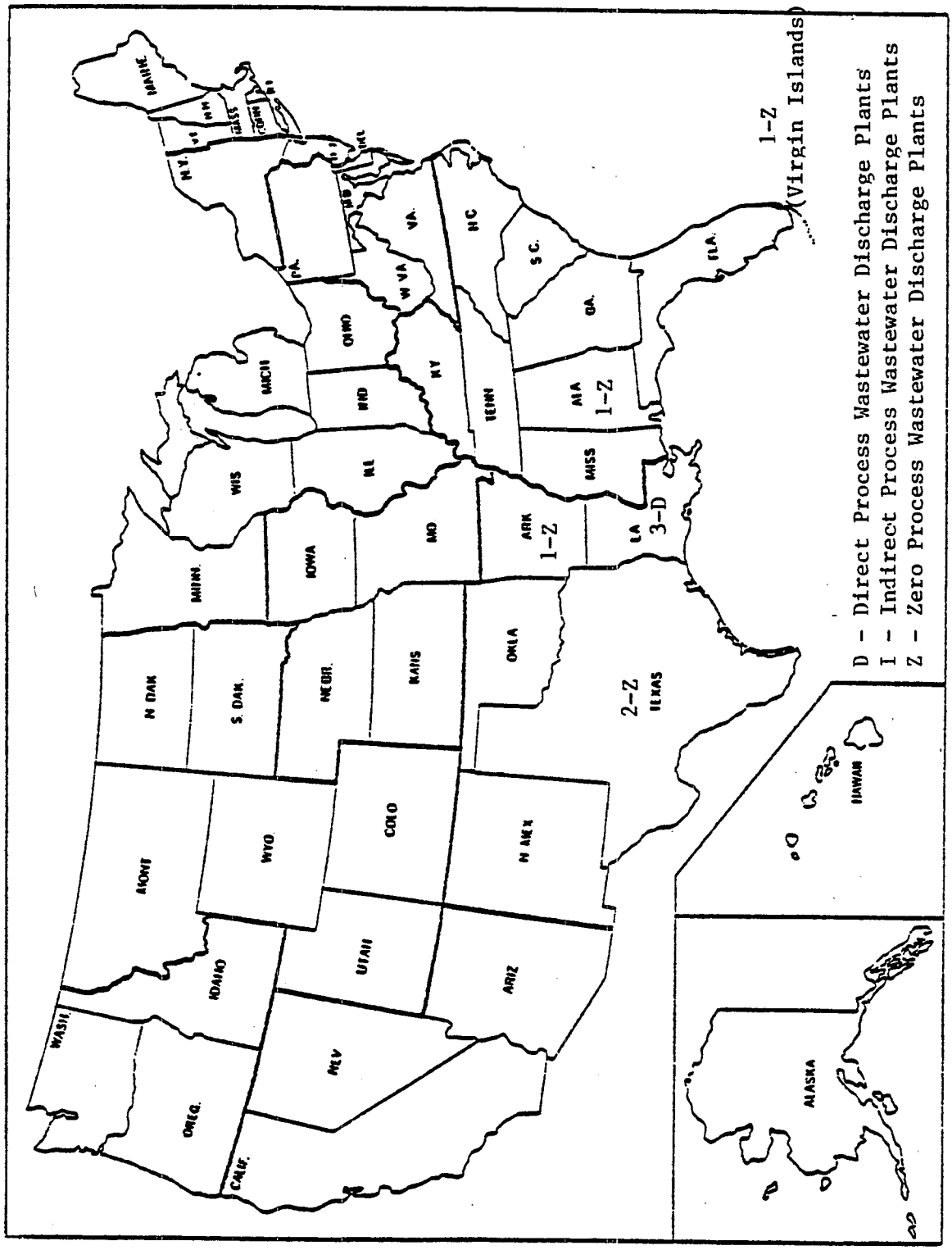

Figure III-2

GEOGRAPHIC LOCATIONS OF THE BAUXITE REFINING SUBCATEGORY PLANTS

THIS PAGE INTENTIONALLY LEFT BLANK

SECTION IV

SUBCATEGORIZATION

This section summarizes the factors considered during the designation of the bauxite refining subcategory and its related subdivisions.

FACTORS CONSIDERED IN SUBCATEGORIZATION

In establishing subcategories in the nonferrous metals manufacturing category, the following factors were evaluated for use in determining appropriate subcategories. These factore are discused more fully in Section IV of Vol. 1.

1. Metal products, co-products, and by-products;
2. Raw materials;
3. Manufacturing processes;
4. Product form;
5. Plant location;
6. Plant age;
7. Plant size;
8. Air pollution control methods;
9. Meteorological conditions;
10. Treatment costs;
11. Nonwater quality aspects;
12. Number of employees;
13. Total energy requirements; and
14. Unique plant characteristics.

Evaluation of all factors that could warrant subcategorization resulted in the designation of the bauxite refining subcategory. Three factors were particularly important in establishing these classifications: the type of metal produced, the nature of the raw materials used, and the manufacturing processes involved. Bauxite refining was considered as a single subcategory during the previous (1974) rulemaking (40 CFR Part 421, Subpart A).

FACTORS CONSIDERED IN SUBDIVIDING THE BAUXITE REFINING SUBCATEGORY

The rationale for considering further subdivision of the bauxite refining subcategory into building blocks is based primarily on the production process used. Within this subcategory, a number of different operations are performed, which may or may not have a water use or discharge, and which may require the establishment of separate effluent limitations and standards. While bauxite refining is still considered a single subcategory, a more thorough examination of the production processes has illustrated the need for limitations and

standards based on a specific set of waste streams. Limitations and standards will be based on specific flow allowances for the following subdivisions:

1. Digester condensate,
2. Barometric condenser effluent,
3. Carbonation plant effluent, and
4. Mud impoundment effluent.

OTHER FACTORS

Factors other than manufacturing processes which were considered in this evaluation either support the establishment of the four subdivisions or were determined to be inappropriate bases for subdivision. Air pollution control methods, treatment costs, and total energy requirements are functions of the selected subcategorization factors, namely metal product, raw materials, and production processes. Factors such as plant age, plant size, and number of employees were also evaluated and determined to be inappropriate bases for subdivision of this nonferrous metals subcategory.

TYPE OF PLANT

There is fundamentally only one process for refining bauxite: the Bayer process. The combination process, a variation of the Bayer process, further treats the red mud waste from the Bayer process to recover additional aluminum and alkali values. The differences in the manufacturing processes and wastes produced at Bayer-process plants and combination process plants are not significant enough to warrant further subdivision based on plant type.

RAW MATERIALS

The major process waste associated with the refining of bauxite is the red mud residue. While the monohydrate content of different ores requires different digestion conditions at different plants, the quality of the red mud waste is not significantly affected. Similarly, the differences in quality between the red mud from the Bayer process and the brown mud waste generated when residues from high-silica bauxites are treated by the combination process do not warrant further subdivision.

There are differences in the amount of mud generated per ton of alumina produced which depend on the source of the bauxite. Only one-third ton of mud is produced per ton of alumina when Surinam bauxite is processed; two or more tons of mud are produced per ton of bauxite when Arkansas bauxite is refined. Nevertheless, these differences affect the size, not the nature of the disposal

problem. Therefore, the specific type of bauxite raw material refined is not chosen as a basis for further subdivision.

PLANT LOCATION

The relationship between annual rainfall and annual evaporation is significant at bauxite refining plants because the process facilities and red mud lakes typically cover large land areas. In regions where precipitation exceeds evaporation, collected rainfall runoff can accumulate and present disposal problems. However, if provisions are made to segregate process wastewaters and runoff from plant sites, the runoff can be discharged to its normal water course. By allowing the discharge of net rainfall from the impoundment areas, accumulation of water and disruption of the plant's water balance can be avoided. Therefore, further subdivision based on plant location is not necessary.

THIS PAGE INTENTIONALLY LEFT BLANK

SECTION V

WATER USE AND WASTEWATER CHARACTERISTICS

This section describes the characteristics of wastewater associated with the bauxite refining subcategory. Data used to quantify wastewater flow and pollutant concentrations are presented, summarized, and discussed. The contribution of specific production processes to the overall wastewater discharge from bauxite refining plants is identified whenever possible.

The two principal data sources were data collection portfolios (dcp) and field sampling results. Data collection portfolios, completed for each of the bauxite refining plants, contain information regarding wastewater flows and production levels.

In order to quantify the pollutant discharge from bauxite refining plants, a field sampling program was conducted. Wastewater samples were analyzed for 124 of the 126 toxic pollutants and other pollutants deemed appropriate. (Because the analytical standard for TCDD was judged to be too hazardous to be made generally available, samples were never analyzed for this pollutant. Also, samples were never analyzed for asbestos. There is no reason to expect that TCDD or asbestos would be present in bauxite refining wastewater.) Two plants were selected for sampling in the bauxite refining subcategory. A complete list of the pollutants considered and a summary of the techniques used in sampling and laboratory analyses are included in Section V of the General Development Document. In general, the samples were analyzed for three classes of pollutants: priority organic pollutants, priority metal pollutants, and criteria pollutants (which includes both conventional and nonconventional pollutants).

No additional sampling was performed by EPA following proposal. Therefore, the pollutant selection process discussed in Section IV and the compliance cost and pollutant removal estimates presented in Section X are based on the same data used for proposal. EPA received several comments from industry which provided additional wastewater characterization data. These data were used to help EPA formulate its recommendations for this subcategory.

As described in Section IV of this supplement, the bauxite refining subcategory has been further divided into four building blocks. Differences in the characteristics of the wastewater streams corresponding to each subdivision are to be expected and are addressed separately in the discussions that follow. These wastewater sources are:

1. Digester condensate,

2. Barometric condenser effluent,

3. Carbonation plant effluent, and

4. Mud impoundment effluent.

WASTEWATER CHARACTERISTICS DATA

Data used to characterize the various wastewaters associated with bauxite refining come from two sources: data collection portfolios (dcp) and analytical data from field sampling trips.

DATA COLLECTION PORTFOLIOS

In the data collection portfolios, plants were asked to indicate which of the priority pollutants were known or were believed to be present in their effluent. Two plants indicated that priority organics were known to be present. Three plants stated that priority metals were known or believed to be present in their effluent. The responses from the three plants which provided information are summarized below.

Pollutant	Known Present	Believed Present
23. chloroform	1	0
44. methylene chloride	1	0
48. dichlorobromomethane	1	0
65. phenol	2	2
68. di-n-butyl phthalate	1	0
70. diethyl phthalate	1	0
86. toluene	1	0
114. antimony	2	2
115. arsenic	2	3
117. beryllium	1	1
118. cadmium	1	2
119. chromium (Total)	2	3
120. copper	2	3
121. cyanide (Total)	1	0
122. lead	2	3
123. mercury	2	3
124. nickel	1	2
125. selenium	2	3
126. silver	2	3
127. thallium	1	2
128. zinc	2	3

FIELD SAMPLING DATA

In order to quantify the concentrations of pollutants present in wastewater from bauxite refining plants, wastewater samples were collected at two of the eight plants. Diagrams indicating the sampling sites and contributing production processes are shown in Figures V-1 and V-2 (pages 552 to 553).

The sampling data for the bauxite refining subcategory are presented in tables at the end of this section. The stream codes listed may be used to identify the location of each of the samples on the process flow diagrams in Figures V-1 and V-2. Where no data are listed for a specific day of sampling, the wastewater samples for the stream were not collected.

Several points regarding these tables should be noted. First, the data tables include some samples measured at concentrations considered not quantifiable. The base-neutral extractable, acid extractable, and volatile organics are generally considered not quantifiable at concentrations equal to or less than 0.010 mg/l. Below this concentration, organic analytical results are not quantitatively accurate; however, the analyses are useful to indicate the presence of a particular pollutant. The pesticide fraction is considered not quantifiable at concentrations equal to or less than 0.005 mg/l. Nonquantifiable results are designated in the tables with an asterisk (double asterisk for pesticides).

Second, the detection limits shown on the data tables are not the same in all cases as the published detection limits for these pollutants by the same analytical methods. The detection limits used were reported with the analytical data and hence are the appropriate limits to apply to the data. Detection limit variation can occur as a result of a number of laboratory-specific, equipment-specific, and daily operator-specific factors. These factors can include day-to-day differences in machine calibration, variation in stock solutions, and variation in operators.

Third, the statistical analysis of data includes some samples measured at concentrations considered not quantifiable. Priority organics data reported as an asterisk or with a "less than" sign are considered as detected but below quantifiable concentrations, and a value of zero is used for averaging. A value of zero is also used for averaging if a pollutant is reported as not detected. Finally, priority metal values reported as less than a certain value were considered as below quantification and a value of zero is used in the calculation of the average.

Finally, appropriate source water concentrations are presented with the sampling data. The method by which each sample was collected is indicated by number as follows:

1. One-time grab
2. Manual composite during intermittent process operation
3. 8-hour manual composite
4. 8-hour automatic composite
5. 24-hour manual composite
6. 24-hour automatic composite

WASTEWATER CHARACTERISTICS AND FLOWS BY BUILDING BLOCK

Bauxite refining involves four principal sources of wastewater, each of which has potentially different characteristics. The wastewater characteristics corresponding to each will be described separately in the discussions that follow. A discharge is allowed from the overflow of a process wastewater impoundment in a volume equal to the difference between the precipitation that falls within the impoundment in a given month and the evaporation from that impoundment (this is termed net precipitation). EPA is not promulgating any modifications to the no discharge limitation for process wastewater pollutants (which was originally promulgated April 8, 1974). For this reason, water use and discharge flow will be addressed only with regard to the net precipitation discharge from mud impoundments in the discussions that follow.

DIGESTER CONDENSATE

Bauxite ore is digested with caustic to produce a slurry of sodium aluminate in aqueous solution with undissolved solids. This slurry enters a system of expansion vessels or "flash tanks" for cooling, pressure reduction, and heat recovery. Vapor released in the flash tanks is condensed as a high quality water suitable for reuse as boiler water or product wash water. The digester condensate is characterized by treatable concentrations of phenols, low concentrations of suspended solids, and high pH. Sampling data for the digester condensate are presented in Table V-2 (page 541).

BAROMETRIC CONDENSER EFFLUENT

The spent liquor separated from the hydrate crystals during classification is returned to the grinding and digestion processes to recover the caustic value of the stream. The liquor passes through evaporators which remove excess water and re-concentrate the caustic stream for reuse.

The vapor generated in the spent caustic evaporators is condensed in barometric condensers. Although occasional upsets may cause entrainment of caustic, the condensate, also referred to as hotwell discharge, is a good quality, somewhat alkaline water. This stream is characterized by treatable concentrations of phenols and suspended solids. Sampling data for barometric condenser effluent are presented in Table V-3 (page 544).

CARBONATION PLANT EFFLUENT

Some provision must be made to remove soluble salts from the recycled caustic to prevent the accumulation of impurities in the process. One plant removes and carbonates a small portion of the process liquor and the hydrate seed. The resulting alumina precipitate is returned to the digesters. The overflow from the carbonation process contains the soluble impurities in a neutralized solution which is characterized by treatable concentrations of phenols and suspended solids. Sampling data

for carbonation plant effluent are presented in Table V-4 (page 547).

MUD IMPOUNDMENT EFFLUENT

Red mud is the major waste stream from the bauxite refinery. It contains all of the impurities from the bauxite, such as iron oxide, silicon dioxide, and titanium dioxide, as well as by-products formed during the process, such as sodium aluminum silicates and calcium silicates. Red mud is discharged to ponds, along with other process streams, where insoluble solids, including the oxides of metallic elements, settle out of suspension. The clarified liquid, characterized by treatable concentrations of phenols and high pH, can be recycled and reused directly from the mud lake or decanted to a "clear lake" before discharge in accordance with the net precipitation limitations.

The water use and discharge rates of this wastewater are listed in Table V-1 (page 540) in liters per year of mud impoundment effluent. Sampling data for the effluent from mud impoundments at two plants are presented in Table V-5 (page 549). At plant A, the impoundment effluent is discharged directly from the mud lake without recycle to the process. At plant B, overflow and underflow from the red mud drying beds are sent to a clear lake from which water is recycled or discharged.

Table V-1

WATER USE AND DISCHARGE RATES FOR MUD IMPOUNDMENT EFFLUENT (l/yr)

Plant Code	Discharge Flow
1171	1.45×10^9
1141	5.95×10^9
1076	2.983×10^8
1136	0
1073	0
1135	0
1032	0
1015	0

TABLE V-2

BAUXITE REFINING SUBCATEGORY
DIGESTER CONDENSATE SAMPLING DATA

Toxic	Pollutant Pollutants	Stream Code	Sample Type	Concentration (mg/l) Source	Day 1	Day 2	Da
1.	acenaphthene	101	5		0.018	0.026	0.
		201	5			0.093	0.
4.	benzene	201	1		*	0.140	0.
6.	carbon tetrachloride	101	1			0.140	
11.	1,1,1-trichloroethane	201	1				
21.	2,4,6-trichlorophenol	201	5	ND	0.032		
22.	parachlorometacresol	201	5	ND	ND		
23.	chloroform	101	1	*	*	*	*
		201	1	*	0.054	0.093	0.
24.	2-chlorophenol	201	5	ND	ND		
31.	2,4-dichlorophenol	201	5	ND	0.011		
34.	2,4-dimethylphenol	101	5			0.930	0.
		201	5	*	ND	0.420	
39.	fluoranthene	101	5	*	0.015	*	0.
		201	5		*	*	*
44.	methylene chloride	101	1	*	*	0.018	0.
		201	1		0.073	0.020	0.
55.	napthalene	101	5		0.039	0.018	0.
		201	5			0.130	*
57.	2-nitrophenol	101	5				*
		201	5	ND	ND	*	0.
58.	4- nitrophenol	201	5	ND	ND		
59.	2,4-dinitrophenol	201	5	ND	ND		
60.	4,6-dinitro-o-cresol	101	5				0.
		201	5	*	0.016		
64.	pentachlorophenol	101	5				*
		201	5	ND	ND		
65.	phenol	101	5	*	1.800	2.300	1.
		201	5	ND	2.100	1.30	0.
66.	bis(2-ethylhexyl)phthalate	101	5	0.790	0.066	0.055	0.
		201	5	0.020	0.053		0.
67.	butyl benzyl phthalate	101	5	*	*	*	*
68.	di-n-butyl phthalate	101	5	*	0.034	*	*
		201	5			0.047	0.
70.	diethyl phthalate	101	5		0.015	0.016	*
		201	5		0.080	0.280	0.
71.	dimethyl phthalate	101	5		0.022	0.038	

TABLE V-2 (Continued)

BAUXITE REFINING SUBCATEGORY
DIGESTER CONDENSATE SAMPLING DATA

Pollutant Toxic Pollutants	Stream Code	Sample Type	Concentration (mg/l) Source	Day 1	Day 2	Da
73. benzo (a)pyrene	101	5				*
	201	5				*
76. chrysene	101	5				*
	201	5			*	*
77. acenapthylene	101	5		0.030		
	201	5			0.053	
80. fluorene	101	5		*	0.033	0.
84. pyrene	101	5		*	*	*
	201	5		*	*	*
85. tetrachlorethylene	101	1			*	*
	201	1		0.012	*	
86. toluene	101	1			0.029	0.
	201	1		0.053	0.345	0.
87. trichloroethylene	101	1		*	*	
	201	1			*	*
89. aldrin	201	5	**	**		
92. 4,4'-DDT	101	5	**	**	**	*
	201	5	**	**	**	*
93. 4,4'-DDE(p,p'DDX)	101	5	**	**		
	201	5	**	**	**	*
94. 4,4'-DDD(p,p'TDE)*	101	5				*
97. endosulfan sulfate	101	5			**	*
	201	5		**	**	
98. endrin	201	5		**	**	*
99. endrin aldehyde	101	5		**	**	
	201	5	**	**	**	*
101. heptachlor epoxide	101	5	**	**		*
	201	5	**	**	**	*
102. alpha-BHC	101	5				*
104. gamma-BHC	101	5	**	**		*
	201	5	**	**	**	*
105. delta-BHC	201	5		**		
106. PCB-1242 (Arochlor 1242)	101	5	**	**		*
	201	5	**	**	**	*
107. PCB-1254 (Arochlor 1254)	101	5	**	**		*
	201	5	**	**	**	*
108. PCB-1221 (Arochlor 1221)	101	5	**	**	**	*
	201	5	**	**	**	*
109. PCB-1232 (Arochlor 1232)	101	5	**	**		*
	201	5	**	**	**	*

TABLE V-2 (Continued)

BAUXITE REFINING SUBCATEGORY
DIGESTER CONDENSATE SAMPLING DATA

Pollutant	Stream Code	Sample Type	Concentration (mg/l) Source	Day 1	Day 2	Da
Toxic Pollutants						
110. PCB-1248 (Arochlor 1248)	101	5	**	**		*
	201	5	**	**	**	*
111. PCB-1260 (Arochlor 1260)	101	5	**	**		*
	201	5	**	**	**	*
112. PCB-1016 (Arochlor 1016)	101	5	**	**		*
	201	5	**	**	**	*
114. antimony	101	5	<0.1	<0.1	<0.1	<0.
	201	5	<0.1	<0.1	<0.1	
115. arsenic	101	5	<0.01	<0.01	<0.01	<0.
	201	5	<0.01	<0.01	0.03	
121. cyanide (Total)	101	1		0.002	<0.001	0.
	201	1		0.002	<0.001	0.
125. selenium	101	5	<0.01	<0.01	<0.01	<0.
	201	5	<0.01	<0.01	<0.01	
126. silver	101	5	<0.2	<0.2	<0.2	<0.
	201	5	<0.2	<0.2	<0.2	
127. thallium	101	5	<0.1	<0.1	<0.1	<0.
	201	5	<0.1	<0.1	<0.1	
Nonconventional Pollutants						
Chemical oxygen demand (COD)	101	5	39	131	158	139
	201	5	24	229	214	167
chloride	101	5				8.
fluoride	101	5				0.
phenols (4-AAP)	101	5			7.19	7.
	201	5			6.05	6.
Conventional Pollutants						
oil and grease	101	1		31	11	1
	201	1		7	5	5
total suspended solids (TSS)	101	5	768	6	5	6
	101	5	277	11	2	14
pH (std. units)	101	5		9.10	9.71	9.
	201	5		9.85	9.55	9.

NOTES:
Sample type code
1 - One time Grab
2 - 24-hour manual composite

* Less than 0.01 mg/l
** Less than 0.005 mg/l
(a), (b) - Reported together

TABLE V-3

BAUXITE REFINING SUBCATEGORY
BAROMETRIC CONDENSER (HOT WELL) DISCHARGE
RAW WASTEWATER SAMPLING DATA

Pollutant Toxic Pollutants	Stream Code	Sample Type	Concentration (mg/l) Source	Day 1	Day 2	Da
1. acenaphthene	102	5			*	*
	202	6			*	*
4. benzene	202	1	*	*		*
10. 1,2,dichloroethane	102	1		*		*
20. 2-chloronaphthalene	202	6			*	
21. 2,4,6-trichlorophenol	202	6	ND	0.032		
22. parachlorometacresol	102	5		0.013		
	202	6	ND	ND		
23. chloroform	102	1	*	*		0.
	202	1	*	*	*	*
24. 2-chlorophenol	202	6	ND	*		
31. 2,4-dichlorophenol	202	6	*	0.010		
34. 2,4-dimethylphenol	102	5			0.038	
	202	6		*		
39. fluoranthene	102	5	*		*	*
	202	6			*	
44. methylene chloride	102	1	*	0.063		0.
	202	1			0.110	*
55. napthalene	202	6			*	
57. 2-nitrophenol	102	5		0.110		*
	202	6			*	*
58. 4- nitrophenol	201	5	ND	ND		*
59. 2,4-dinitrophenol	202	6	ND	ND		
60. 4,6-dinitro-o-cresol	202	6	*	0.019		
64. pentachlorophenol	202	6	ND	ND		
65. phenol	102	5	*		0.075	
	202	6	ND	2.0	*	*
66. bis(2-ethylhexyl)phthalate	102	5	0.790	0.170	0.016	0.
	202	6	0.020	*	1.3	0.
67. butyl benzyl phthalate	102	5	*		*	*
	202	6				*
68. di-n-butyl phthalate	102	5	*		*	*
	202	6		*	0.016	*
70. diethyl phthalate	101	5			*	*
	201	6		*		*
71. dimethyl phthalate	102	5				*
	202	6	0.011		*	

TABLE V-3

BAUXITE REFINING SUBCATEGORY
BAROMETRIC CONDENSER (HOT WELL) DISCHARGE
RAW WASTEWATER SAMPLING DATA

Pollutant Toxic Pollutants	Stream Code	Sample Type	Concentration (mg/l) Source	Day 1	Day 2	Da
73. benzo (a)pyrene	102	5				*
76. chrysene	202	6				*
77. acenapthylene	102	5			*	*
	201	6			*	*
80. fluorene	102	5			*	*
	202	6	*			*
84. pyrene	202	6			*	*
	202	5				
85. tetrachlorethylene	102	1		*		
	202	1				*
86. toluene	102	1		*		*
	202	1			*	
89. aldrin	202	6	**	**	**	*
90. dieldrin	102	5	**		**	*
	202	6			**	*
91. chlorodane	102	5	**		**	*
	202	6	**	**	**	*
92. 4,4'-DDT	102	5	**		**	*
	202	6	**	**	**	*
93. 4,4'-DDE(p,p'DDX)	101	5	**		**	*
	202	5				*
94. 4,4'-DDD(p,p'TDE)*	102	5			**	
	202	6		**	**	
97. endosulfan sulfate	102	5			**	
	202	6		**	**	*
98. endrin	102	5	**			*
	202	6		**	**	*
99. endrin aldehyde	202	6	**	**		
100. heptachlor	102	5			**	*
	202	6		**	**	*
101. heptachlor epoxide	101	5	**		**	*
	201	5	**	**	**	*
102. alpha-BHC	102	5				*
	202	6	**	**		*
103. beta-BHC	102	5	**		**	*
	202	6	**	**	**	*
104. gamma-BHC	102	5	**		**	*
	202	6	**	**	**	*
105. delta-BHC	202	6	**	**	**	*

TABLE V-3 (Continued)

BAUXITE REFINING SUBCATEGORY
BAROMETRIC CONDENSER (HOT WELL) DISCHARGE
RAW WASTEWATER SAMPLING DATA

Pollutant	Stream Code	Sample Type	Concentration (mg/l) Source	Day 1	Day 2	Da
Toxic Pollutants						
106. PCB-1242 (Arochlor 1242)	102	5	**		**	*
	202	6	**	**	**	*
107. PCB-1254 (Arochlor 1254)	102	5	**		**	*
	202	6	**	**	**	*
108. PCB-1221 (Arochlor 1221)	102	5	**		**	*
	202	6	**	**	**	*
109. PCB-1232 (Arochlor 1232)	102	5	**		**	*
	202	6	**	**	**	*
110. PCB-1248 (Arochlor 1248)	102	5	**		**	*
	202	6	**	**	**	*
111. PCB-1260 (Arochlor 1260)	102	5	**		**	*
	202	6	**	**	**	*
112. PCB-1016 (Arochlor 1016)	102	5	**		**	*
	202	6	**	**	**	*
121. cyanide (Total)	101	1				
	201	1				
Nonconventional Pollutants						
Chemical oxygen demand (COD)	102	5	39	36	36	50
	202	6	24	31	28	30
chloride	102	5				20
fluoride	101	5				0.
phenols (4-AAP)	101	1	ND	0.374	0.190	0.
	201	1	ND	0.020	0.023	
Conventional Pollutants						
oil and grease	101	1	ND	10	9	2
	201	1	ND	5	4	4
total suspended solids (TSS)	101	5	768	373	275	270
	101	5	277	296	462	291
pH (std. units)	101	5		8.70	9.12	9.
	201	5		8.0	8.2	

NOTES:
Sample type code
1 - One time Grab
5 - 24-hour manual composite
6 - 24-hour automatic composite

* Less than 0.01 mg/l
**Less than 0.005 mg/l

(a), (b) - Reported together

TABLE V-4

BAUXITE REFINING SUBCATEGORY
CARBONATION PLANT EFFLUENT
RAW WASTEWATER SAMPLING DATA

Toxic	Pollutant Pollutants	Stream Code	Sample Type	Concentration (mg/l) Source	Day 1	Day 2	Da
21.	2,4,6-trichlorophenol	201	5	ND	ND		
22.	parachlorometacresol	201	5	ND	ND		
23.	chloroform	203	1	*	*	0.054	
24.	2-chlorophenol	203	5	ND	1.600		
31.	2,4-dichlorophenol	203	5	ND	ND		
34.	2,4-dimethylphenol	203	5	*	ND	0.140	
39.	fluoranthene	203	5			*	
44.	methylene chloride	203	1			*	
57.	2-nitrophenol	203	5	ND	ND		
58.	4- nitrophenol	203	5	ND	ND		
59.	2,4-dinitrophenol	203	5	ND	ND		
60.	4,6-dinitro-o-cresol	203	5	*	ND		
64.	pentachlorophenol	203	5	ND	ND	1.300	
65.	phenol	203	5	ND	2.100	0.016	
66.	bis(2-ethylhexyl)phthalate	203	5	0.020			
67.	butyl benzyl phthalate	203	5			*	
68.	di-n-butyl phthalate	203	5			*	
70.	diethyl phthalate	203	5			0.017	
71.	dimethyl phthalate	203	5	0.011		0.130	
77.	acenapthylene	203	5			*	
84.	pyrene	203	5			*	
85.	tetrachlorethylene	203	1			0.021	
87.	trichloroethylene	203	1			*	
89.	aldrin	203	5	**		**	
90.	dieldrin	203	5			**	
91.	chlorodane	203	5	**		**	
93.	4,4'-DDE(p,p'DDX)	203	5	**		**	
96.	beta-endosulfan	203	5			**	
97.	endosulfan sulfate	203	5			**	
100.	heptachlor	203	5	**		**	
101.	heptachlor epoxide	203	5	**		**	
103.	beta-BHC	203	5	**		**	
104.	gamma-BHC	203	5	**		**	

TABLE V-4

BAUXITE REFINING DIGESTER CONDENSATE
SAMPLING DATA

Pollutant	Stream Code	Sample Type	Concentration (mg/l) Source	Day 1	Day 2	Da
Toxic Pollutants						
105. delta-BHC	203	5	**		**	
106. PCB-1242 (Arochlor 1242) a	203	5	**		**	
107. PCB-1254 (Arochlor 1254) a	203	5	**		**	
108. PCB-1221 (Arochlor 1221) a	203	5	**		**	
109. PCB-1232 (Arochlor 1232) b	203	5	**		**	
110. PCB-1248 (Arochlor 1248) b	203	5	**		**	
111. PCB-1260 (Arochlor 1260) b	203	5	**		**	
112. PCB-1016 (Arochlor 1016) b	203	5	**		**	
114. antimony	203	5	<0.1	<0.1		
115. arsenic	203	5	<0.01	0.44		
121. cyanide (Total)	203	1		<0.001	<0.001	
125. selenium	203	5	<0.01	<0.01		
126. silver	203	5	<0.02	0.02		
127. thallium	203	5	<0.1	0.3		
Nonconventional Pollutants						
Chemical oxygen demand (COD)	203	5	24	8,270	3,985	
phenols (4-AAP)	203	5		24.6	11.2	
Conventional Pollutants						
oil and grease	203	1		43	9	
total suspended solids (TSS)	203	5	277	325	887	
pH (std. units)	203	5		7.9	8.6	

NOTES:
Sample type code
1 - One time Grab
2 - 24-hour manual composite

* Less than 0.01 mg/l
** Less than 0.005 mg/l
(a), (b) - Reported together

TABLE V-5

BAUXITE REFINING SUBCATEGORY
MUD LAKE DISCHARGE
RAW WASTEWATER SAMPLING DATA

Pollutant Toxic Pollutants	Stream Code	Sample Type	Concentration (mg/l) Source	Day 1	Day 2	Da
1. acenaphthene	101	5				*
6. carbon tetrachloride	201	1		*		
10. 1,2-dichlorethane	104	1	*			
21. 2,4,6-trichlorophenol	104	5			0.048	0.
	204	6	ND	*	0.054	
22. parachlorometacresol	204	1	ND	ND		
23. chloroform	104	1	*	0.026	*	N
	204	1	*		0.015	0.
24. 2-chlorophenol	204	6	ND	0.065		0.
31. 2,4-dichlorophenol	104	5		0.050	0.047	0.
	204	6		*	0.060	
34. 2,4-dimethylphenol	104	5			*	*
	204	6	*	*		
39. fluoranthene	104	5	*			*
	204	6		*	*	*
44. methylene chloride	104	1	*	0.051	*	
	204	1			0.020	0.
48. dichlorobromomethane	204	1			*	
55. napthalene	204	6			*	0.
57. 2-nitrophenol	104	5				*
	204	6	ND	ND	0.067	
58. 4- nitrophenol	104	5			0.040	0.
	204	6	ND	ND	0.310	
59. 2,4-dinitrophenol	204	4	ND	ND		
60. 4,6-dinitro-o-cresol	204	4	*	0.011		
64. pentachlorophenol	104	5				*
	204	6	ND	ND		
65. phenol	104	5	*	0.034	0.035	0.
	204	6	ND	0.320	0.230	0.
66. bis(2-ethylhexyl)phthalate	104	5	0.790	0.150	0.330	*
	204	6	0.020	0.720	0.650	*
67. butyl benzyl phthalate	104	5	*	*	*	*
	204	6			*	*
68. di-n-butyl phthalate	104	5	*	*	*	*
	204	6	*	*	*	*
70. diethyl phthalate	204	5	0.011		0.010	0.
71. dimethyl phthalate	104	5				*
	204	6				1.

TABLE V-5

BAUXITE REFINING SUBCATEGORY
MUD LAKE DISCHARGE
RAW WASTEWATER SAMPLING DATA

Pollutant Toxic Pollutants	Stream Code	Sample Type	Concentration (mg/l) Source	Day 1	Day 2	Da
77. acenapthylene	104	5		*		0.
	204	6				0.
80. fluorene	104	5				*
84. pyrene	104	5	*			*
	204	6		*	*	*
85. tetrachlorethylene	104	1		0.012		
86. toluene	204	1			*	
91. Cholordane	201	5	**		**	*
	204	6	**	**	**	*
92. 4,4'-DDT	104	5	**	**	**	*
	204	6	**	**	**	*
93. 4,4'-DDE(p,p'DDX)	204	6	**	**		
95. alpha-endosulfan	104	5			**	*
96. beta-endosulfan	104	5			**	*
97. endosulfan sulfate	104	5			**	*
	204	6		**	**	*
98. endrin	104	5	**	**		
	204	6		**	**	*
99. endrin aldehyde	204	6	**	**		
100. heptachlor	104	5	**	**	**	*
	204	6	**	**	**	*
101. heptachlor epoxide	104	5	**	**	**	*
	204	6	**	**	**	*
102 alpha-BHC	104	5		**		
	204	6	**	**	**	
103. beta-BHC	104	5	**	**	**	*
	204	6	**	**	**	*
104. gamma-BHC	101	5	**	**		
	204	6	**	**	**	*
106. PCB-1242 (Arochlor 1242) a	101	5	**	**	**	
	204	6	**	**	**	*
107. PCB-1254 (Arochlor 1254) a	101	5	**	**	**	
	204	6	**	**	**	*
108. PCB-1221 (Arochlor 1221) a	104	5	**	**	**	
	204	6	**	**	**	*
109. PCB-1232 (Arochlor 1232) b	104	5	**	**	**	
	204	6	**	**	**	*
110. PCB-1248 (Arochlor 1248) b	104	5	**	**	**	
	204	6	**	**	**	*

TABLE V-5 (Continued)

BAUXITE REFINING SUBCATEGORY
MUD LAKE DISCHARGE
RAW WASTEWATER SAMPLING DATA

Pollutant	Stream Code	Sample Type	Concentration (mg/l) Source	Day 1	Day 2	Da
Toxic Pollutants						
111. PCB-1260 (Arochlor 1260) b	104	5	**	**	**	
	204	6	**	**	**	*
112. PCB-1016 (Arochlor 1016) b	104	5	**	**	**	
	204	6	**	**	**	*
114. antimony	104	5	<0.1	<0.1	<0.1	<0.
	204	6	<0.1	<0.1	<0.1	
115. arsenic	104	5	<0.01	0.2	0.14	0.
	204	6	<0.01	0.32	0.08	
121. cyanide (Total)	104	1		0.01	0.003	0.
	204	1		<0.001	<0.001	<0.
125. selenium	104	5	<0.01	<0.01	<0.01	<0.
	204	6	<0.01	<0.01	<0.01	
126. silver	104	5	<0.02	<0.02	<0.02	<0.
	204	6	<0.02	<0.02	<0.02	
127. thallium	104	5	<0.1	<0.1	<0.1	<0.
	204	6	<0.1	<0.1	<0.1	<0.
Nonconventional Pollutants						
Chemical oxygen demand (COD)	101	5	39	364	374	451
	201	5	24	977	943	495
chloride	101	5				33
fluoride	101	5				4
	201	5		2		
phenols (4-AAP)	101	5		0.197	0.116	0.
	201	5		0.981	1.15	1.
Conventional Pollutants						
oil and grease	101	1			23	5
	201	1		15	6	22
total suspended solids (TSS)	101	5	768	18	16	9
	101	5	277	11	2	4
pH (std. units)	101	5		11.70	11.76	11.
	201	5		11.55	11.5	

NOTES:
Sample type code
1 - One time Grab
2 - 24-hour manual composite

* Less than 0.01 mg/l
** Less than 0.005 mg/l
(a) or (b) - Reported together

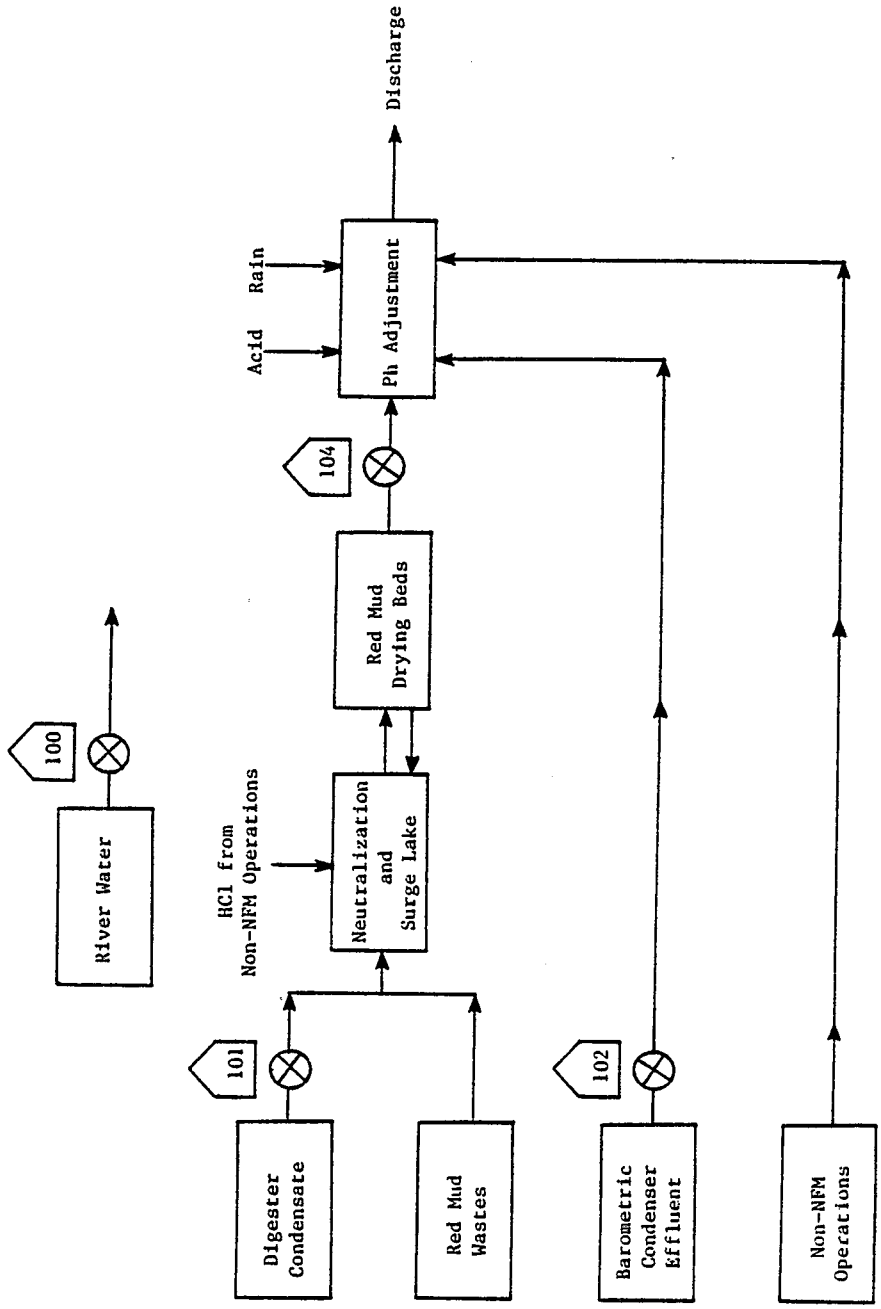

Figure V-1
SAMPLING SITES AT BAUXITE REFINING PLANT A

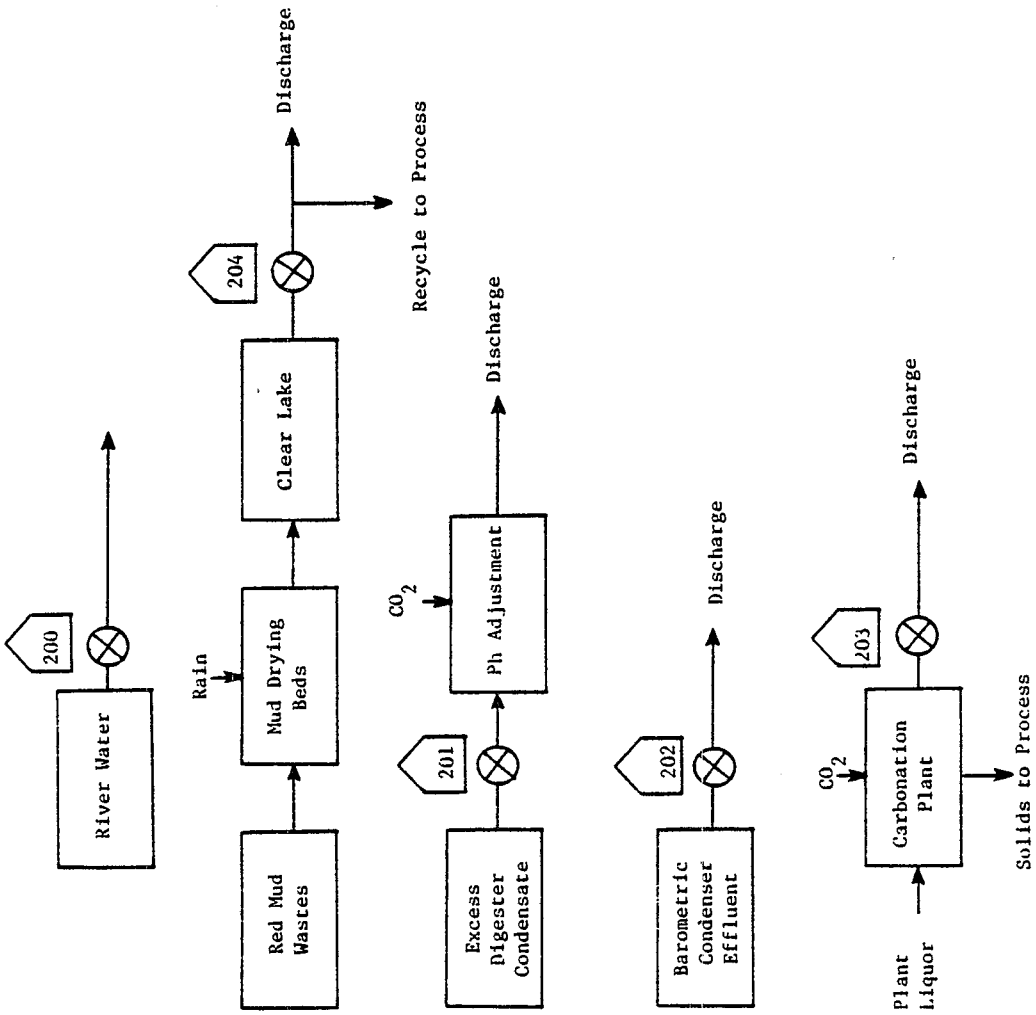

Figure V-2
SAMPLING SITES AT BAUXITE REFINING PLANT B

THIS PAGE INTENTIONALLY LEFT BLANK

SECTION VI

SELECTION OF POLLUTANT PARAMETERS

Section V of this supplement presented data from bauxite refining plant sampling visits and subsequent chemical analyses. This section examines that data and discusses the selection or exclusion of pollutants for potential limitation.

This section discusses the selection of conventional and nonconventional pollutants for consideration for regulation. The discussion that follows also describes the analysis that was performed to select or exclude priority pollutants for further consideration for limitations and standards. Generally, pollutants will be selected for further consideration if they are present in concentrations treatable by the technologies considered in this analysis. The treatable concentrations used for the toxic metals are the long-term treatment performance concentrations achievable by lime precipitation, sedimentation, and filtration (L,S&F). The concentrations for the toxic organics are the long-term performance values achievable by activated carbon adsorption.

CONVENTIONAL AND NONCONVENTIONAL POLLUTANT PARAMETERS

This study considered samples from the bauxite refining subcategory for three conventional pollutant parameters (oil and grease, total suspended solids, and pH) and two nonconventional pollutant parameters (chemical oxygen demand and total phenolics). Because existing BPT regulations (40 CFR Part 421, Subpart A) specify zero discharge of process wastewater pollutants, only sampling data from allowable net precipitation discharges from mud impoundments were considered in the selection of conventional and nonconventional pollutant parameters for regulation.

CONVENTIONAL AND NONCONVENTIONAL POLLUTANT PARAMETERS SELECTED

The conventional and nonconventional pollutants or pollutant parameters selected for consideration for limitation in this subcategory are pH and phenols.

The pH values observed in five samples ranged from 11.5 to 11.76. Effective and consistent removal of priority organics by activated carbon or chemical oxidation requires careful control of pH. Therefore, pH is selected for consideration for limitation in this subcategory.

Phenols concentrations in six samples ranged from 0.116 to 1.23

mg/l. The observed concentrations are above those considered treatable by identified treatment technology. Sampling data from process wastewater streams, presented in Section V, indicate the presence of phenolic compounds throughout the bauxite refining process. Therefore, phenols are considered for limitation in this subcategory.

The major source of oil and grease in the bauxite refining subcategory is from the lubrication of process machinery. Because oil and grease in process wastewater is not present in significant concentrations, oil and grease is not selected for limitation.

Total suspended solids (TSS) concentrations in six samples range from 2 to 18 mg/l. Although treatable, these concentrations are not considered to be significant and are not expected to interfere with end-of-pipe treatment technologies such as activated carbon adsorption or chemical oxidation. Therefore, total suspended solids are not selected for limitation in the bauxite refining subcategory.

TOXIC PRIORITY POLLUTANTS

The frequency of occurrence of the toxic pollutants in the wastewater samples taken is presented in Table VI-1 (page 561). These data provide the basis for the categorization of specific pollutants, as discussed below. Table VI-1 is based on the raw wastewater data from mud impoundment effluents at plant A and plant B (see Section V). All other wastewaters have existing zero discharge regulations and were therefore not considered here. Treatment plant and source water samples were not considered in this frequency count.

TOXIC POLLUTANTS NEVER DETECTED

The toxic pollutants listed in Table VI-2 (page 565) were either not analyzed or not detected in any wastewater samples from this subcategory; therefore, they are not selected for consideration in establishing regulations:

We did not analyze for selected pollutants in samples of raw wastewater from this subcategory. These pollutants are not believed to be present based on the Agency's best engineering judgment which includes consideration of raw materials and process operations.

TOXIC POLLUTANTS NEVER FOUND ABOVE THEIR ANALYTICAL QUANTIFICATION LEVEL

The toxic pollutants listed in Table VI-3 (page 567) were never found above their analytical quantification concentration in any wastewater samples from this subcategory; therefore, they are not selected for consideration in establishing

regulations.

TOXIC POLLUTANTS PRESENT BELOW CONCENTRATIONS ACHIEVABLE BY TREATMENT

The pollutants listed below are not selected for consideration in establishing limitations because they were not found in any wastewater samples from this subcategory above concentrations considered achievable by existing or available treatment technologies.

115. arsenic
127. thallium

Arsenic was detected above its analytical quantification limit in five of five samples from two plants. These samples were below the 0.34 mg/l concentration considered achievable by treatment. Therefore, arsenic is not selected for limitation.

Thallium was detected above its analytical quantification limit in one of five samples from two plants. This sample was below the 0.34 mg/l concentration considered achievable by identified treatment technology. Therefore, thallium is not selected for limitation.

TOXIC POLLUTANTS DETECTED IN A SMALL NUMBER OF SOURCES

The following pollutants were not selected for limitation because they were detected in only a small number of sources:

23. chloroform
44. methylene chloride
55. naphthalene
60. 4,6-dinitro-o-cresol
66. bis(2-ethylhexyl) phthalate
68. di-n-butyl phthalate
70. diethyl phthalate
71. dimethyl phthalate
77. acenaphthylene
85. tetrachloroethylene

Although these pollutants were not selected for consideration in establishing nationwide limitations, it may be appropriate, on a case-by-case basis, for the local permitter to specify effluent limitations.

Chloroform was detected above its treatable limit in three of six samples from two plants at concentrations of 0.015, 0.026, and 0.063 mg/l. This pollutant is not attributable to any source within the refinery. It also appears in the source water and it is commonly used in the analytical laboratories as a solvent. For these reasons chloroform is not considered for limitation.

Methylene chloride was found above its treatable concentration in

three of four samples from two plants at concentrations of 0.020, 0.051, and 0.170 mg/l. This pollutant is not attributable to specific materials or processes associated with bauxite refining. It is, however, a common solvent used in analytical laboratories. Since the possibility of sample contamination is likely, methylene chloride is not selected for limitation.

Naphthalene was detected above its treatable concentration in one of two samples from one plant, at a concentration of 0.02 mg/l. This pollutant is not attributable to bauxite refining operations or raw materials; it is also present only slightly above the treatability concentration. For these reasons, naphthalene is not considered for limitation.

4,6-Dinitro-o-cresol was found above its treatability concentration in one sample from one plant, at a concentration of 0.011 mg/l. Because this pollutant is not attributable to any specific materials or processes in the bauxite refining operation, and it is present only slightly above the treatability concentration of 0.01 mg/l, this pollutant is not selected for limitation.

Bis(2-ethylhexyl) phthalate was found above its treatable concentration of 0.01 mg/l in five of six samples from two plants. This compound is a plasticizer commonly used in laboratory and field sampling equipment and is not used as a raw material or formed as a by-product in this subcategory. Therefore, bis(2-ethylhexyl) phthalate is not selected for limitation.

Di-n-butyl phthalate was found above its treatable concentration of 0.01 mg/l in one of six samples from two plants. This compound is a plasticizer commonly used in laboratory and field sampling equipment and is not used as a raw material or formed as a by-product in this subcategory. Therefore, di-n-butyl phthalate is not selected for limitation.

Diethyl phthalate was found above its treatable concentration of 0.01 mg/l in one of two samples from one plant. This compound is a plasticizer commonly used in laboratory and field sampling equipment and is not used as a raw material or formed as a by-product in this subcategory. Therefore, diethyl phthalate is not selected for limitation.

Dimethyl phthalate was found above its treatable concentration in one of two samples from two plants at a concentration of 1.5 mg/l. This pollutant is not attributable to specific materials or processes associated with bauxite refining. The high concentration is probably due to contamination from laboratory equipment. Therefore, dimethyl phthalate is not selected for limitation.

Acenaphthylene was found above its analytical quantification limit in two of three samples from two plants at concentrations of 0.018 and 0.086 mg/l. This pollutant has been shown to be

present in the wastewater from briquette quenching operations in the primary aluminum subcategory. The two sampled plants are integrated facilities which manufacture a number of aluminum-based products. Therefore, because it is likely to be generated by processes outside the bauxite refining subcategory and because it is not specifically attributable to the bauxite refining process, acenaphthylene is not selected for limitation.

Tetrachloroethylene was found above its treatability limit in one sample from one plant, at a concentration of 0.012 mg/l. This pollutant is not attributable to any process or material in the refining process; it is present only slightly above its treatability concentration of 0.01 mg/l and it is frequently used in the laboratory, where contamination could occur. For these reasons, tetrachloroethylene is not selected for limitation.

TOXIC POLLUTANTS SELECTED FOR FURTHER CONSIDERATION FOR LIMITATION

The toxic pollutants listed below are selected for further consideration in establishing limitations for this subcategory. The selected pollutants are discussed individually following the list.

21. 2,4,6-trichlorophenol
24. 2-chlorophenol
31. 2,4-dichlorophenol
57. 2-nitrophenol
58. 4-nitrophenol
65. phenol

2,4,6-Trichlorophenol was found above its analytical quantification limit in three of four samples from two plants with concentrations ranging from 0.048 to 0.072 mg/l. All three of those samples were above the 0.01 mg/l concentration considered achievable by identified treatment technology. Therefore, 2,4,6-trichlorophenol is selected for further consideration for limitation.

2-Chlorophenol was found above its analytical quantification limit in two of two samples from one plant with concentrations of 0.065 and 0.720 mg/l. Both of those samples were above the 0.01 mg/l treatability concentration. Therefore, 2-chlorophenol is selected for further consideration for limitation.

2,4-Dichlorophenol was found above its analytical quantification limit in four of five samples from two plants with concentrations ranging from 0.047 to 0.060 mg/l. All four of those samples were above the 0.01 mg/l treatability concentration. Therefore, 2,4-dichlorophenol is selected for further consideration for limitation.

2-Nitrophenol was found above its analytical quantification limit in one of three samples from two plants at a concentration of 0.067 mg/l. That sample was above the 0.01 mg/l treatability

concentration. Therefore, 2-nitrophenol is selected for further consideration for limitation.

4-Nitrophenol was found above its analytical quantification limit in three of four samples from two plants with concentrations ranging from 0.017 to 0.310 mg/l. Those three samples were above the 0.01 mg/l treatability concentration. Therefore, 4-nitrophenol is selected for further consideration for limitation.

Phenol was found above its analytical quantification limit in six of six samples from two plants with concentrations ranging from 0.034 to 0.750 mg/l. All six of those samples were above the 0.01 mg/l treatability concentration. Also, phenols have been identified as constituents of bauxite ore. Therefore, phenol is selected for further consideration for limitation.

Table VI-1

FREQUENCY OF OCCURRENCE OF PRIORITY POLLUTANTS
BAUXITE REFINING
RAW WASTEWATER

Pollutant	Analytical Quantification Concentration (mg/l)(a)	Treatable Concentration (mg/l)(b)	Number of Streams Analyzed	Number of Samples Analyzed	ND	Detected Below Quantification Concentration	Detected Below Treatable Concentration	Detected Above Treatable Concentration
1. acenaphthene	0.010	0.01	1	1		1		
2. acrolein	0.010	0.01						
3. acrylonitrile	0.010	0.01						
4. benzene	0.010	0.01						
5. benzidine	0.010	0.01						
6. carbon tetrachloride	0.010	0.01	1	1		1		
7. chlorobenzene	0.010	0.01						
8. 1,2,4-trichlorobenzene	0.010	0.01						
9. hexachlorobenzene	0.010	0.01						
10. 1,2-dichloroethane	0.010	0.01						
11. 1,1,1-trichloroethane	0.010	0.01						
12. hexachloroethane	0.010	0.01						
13. 1,1-dichloroethane	0.010	0.01						
14. 1,1,2-trichloroethane	0.010	0.01						
15. 1,1,2,2-tetrachloroethane	0.010	0.01						
16. chloroethane	0.010	0.01						
17. bis(chloromethyl) ether	0.010	0.01						
18. bis(2-chloroethyl) ether	0.010	0.01						
19. 2-chloroethyl vinyl ether	0.010	0.01						
20. 2-chloronaphthalene	0.010	0.01						
21. 2,4,6-trichlorophenol	0.010	0.01	2	4		1		3
22. parachlorometa cresol	0.010	0.01	1	1	1			
23. chloroform	0.010	0.01	2	6	2	1	0	3
24. 2-chlorophenol	0.010	0.01	1	2				2
25. 1,2-dichlorobenzene	0.010	0.01						
26. 1,3-dichlorobenzene	0.010	0.01						
27. 1,4-dichlorobenzene	0.010	0.01						
28. 3,3'-dichlorobenzidine	0.010	0.01						
29. 1,1-dichloroethylene	0.010	0.01						
30. 1,2-trans-dichloroethylene	0.010	0.01						
31. 2,4-dichlorophenol	0.010	0.01	2	5		1		4
32. 1,2-dichloropropane	0.010	0.01						
33. 1,3-dichloropropylene	0.010	0.01						
34. 2,4-dimethylphenol	0.010	0.01	2	3		3		

Table VI-1 (Continued)

FREQUENCY OF OCCURRENCE OF PRIORITY POLLUTANTS
BAUXITE REFINING
RAW WASTEWATER

Pollutant	Analytical Quantification Concentration (mg/l)(a)	Treatable Concentration (mg/l)(b)	Number of Streams Analyzed	Number of Samples Analyzed	ND	Detected Below Quantification Concentration	Detected Below Treatable Concentration	Detected Above Treatable Concentration
35. 2,4-dinitrotoluene	0.010	0.01						
36. 2,6-dinitrotoluene	0.010	0.01						
37. 1,2-diphenylhydrazine	0.010	0.01						
38. ethylbenzene	0.010	0.01						
39. fluoranthene	0.010	0.01	2	4		4		
40. 4-chlorophenyl phenyl ether	0.010	0.01						
41. 4-bromophenyl phenyl ether	0.010	0.01						
42. bis(2-chloroisopropyl) ether	0.010	0.01						
43. bis(2-chloroethoxy) methane	0.010	0.01						
44. methylene chloride	0.010	0.01	2	4		1		[illegible]
45. methyl chloride	0.010	0.01						
46. methyl bromide	0.010	0.01						
47. bromoform	0.010	0.01						
48. dichlorobromomethane	0.010	0.01	1	1		1		
49. trichlorofluoromethane	0.010	0.01						
50. dichlorodifluoromethane	0.010	0.01						
51. chlorodibromomethane	0.010	0.01						
52. hexachlorobutadiene	0.010	0.01						
53. hexachlorocyclopentadiene	0.010	0.01						
54. isophorone	0.010	0.01						
55. naphthalene	0.010	0.01	1	2		1		1
56. nitrobenzene	0.010	0.01						
57. 2-nitrophenol	0.010	0.01	2	3	1	1		1
58. 4-nitrophenol	0.010	0.01	2	4	1			3
59. 2,4-dinitrophenol	0.010	0.01	1	1	1			
60. 4,6-dinitro-o-cresol	0.010	0.01	1	1				[illegible]
61. N-nitrosodimethylamine	0.010	0.01						
62. N-nitrosodiphenylamine	0.010	0.01						
63. N-nitrosodi-n-propylamine	0.010	0.01						
64. pentachlorophenol	0.010	0.01	2	2	1	1		
65. phenol	0.010	0.01	2	6				6
66. bis(2-ethylhexyl) phthalate	0.010	0.01	2	6		1		5

Table VI-1 (Continued)

FREQUENCY OF OCCURRENCE OF PRIORITY POLLUTANTS
BAUXITE REFINING
RAW WASTEWATER

Pollutant	Analytical Quantification Concentration (mg/l)(a)	Treatable Concentration (mg/l)(b)	Number of Streams Analyzed	Number of Samples Analyzed	ND	Detected Below Quantification Concentration	Detected Below Treatable Concentration	Detected Above Treatable Concentration
67. butyl benzyl phthalate	0.010	0.01	2	5		5		
68. di-n-butyl phthalate	0.010	0.01	2	5		4		1
69. di-n-octyl phthalate	0.010	0.01						
70. diethyl phthalate	0.010	0.01	1	2				1
71. dimethyl phthalate	0.010	0.01	2	2		1		1
72. benzo(a)anthracene	0.010	0.01						
73. benzo(a)pyrene	0.010	0.01						
74. 3,4-benzofluoranthene	0.010	0.01						
75. benzo(k)fluoranthene	0.010	0.01						
76. chrysene	0.010	0.01						
77. acenaphthylene	0.010	0.01	2	3		1		2
78. anthracene (c)	0.010	0.01						
79. benzo(ghi)perylene	0.010	0.01						
80. fluorene	0.010	0.01	1	1		1		
81. phenanthrene (c)	0.010	0.01						
82. dibenzo(a,h)anthracene	0.010	0.01						
83. indeno(1,2,3-cd)pyrene	0.010	0.01						
84. pyrene	0.010	0.01	2	4		4		
85. tetrachloroethylene	0.010	0.01	1	1				1
86. toluene	0.010	0.01	1	1		1		
87. trichloroethylene	0.010	0.01						
88. vinyl chloride	0.010	0.01						
89. aldrin	0.005	0.01						
90. dieldrin	0.005	0.01						
91. chlordane	0.005	0.01	2	5		5		
92. 4,4'-DDT	0.005	0.01	2	6		6		
93. 4,4'-DDE	0.005	0.01	1	1		1		
94. 4,4'-DDD	0.005	0.01						
95. alpha-endosulfan	0.005	0.01	1	2		2		
96. beta-endosulfan	0.005	0.01	1	2		2		
97. endosulfan sulfate	0.005	0.01	2	5		5		
98. endrin	0.005	0.01	2	4		4		
99. endrin aldehyde	0.005	0.01	1	1		1		
100. heptachlor	0.005	0.01	2	6		6		
101. heptachlor epoxide	0.005	0.01	2	6		6		

Table VI-1 (Continued)

FREQUENCY OF OCCURRENCE OF PRIORITY POLLUTANTS
BAUXITE REFINING
RAW WASTEWATER

Pollutant	Analytical Quantification Concentration (mg/l)(a)	Treatable Concentration (mg/l)(b)	Number of Streams Analyzed	Number of Samples Analyzed	ND	Detected Below Quantification Concentration	Detected Below Treatable Concentration	Detected Above Treatable Concentration
102. alpha-BHC	0.005	0.01	2	3		3		
103. beta-BHC	0.005	0.01	2	6		6		
104. gamma-BHC	0.005	0.01	2	4		4		
105. delta-BHC	0.005	0.01						
106. PCB-1242 (d)	0.005	0.01	2	5		5		
107. PCB-1254 (d)	0.005	0.01	2	5		5		
108. PCB-1221 (d)	0.005	0.01	2	5		5		
109. PCB-1232 (e)	0.005	0.01	2	5		5		
110. PCB-1248 (e)	0.005	0.01	2	5		5		
111. PCB-1260 (e)	0.005	0.01	2	5		5		
112. PCB-1016 (e)	0.005	0.01	2	5		5		
113. toxaphene	0.005	0.01						
114. antimony	0.100	0.47	2	5		5		
115. arsenic	0.010	0.34	2	5			5	
116. asbestos								
117. beryllium	0.010	0.20						
118. cadmium	0.002	0.049						
119. chromium	0.005	0.07						
120. copper	0.009	0.39						
121. cyanide (f)	0.02	0.047	2	6		6		
122. lead	0.020	0.08						
123. mercury	0.0001	0.036						
124. nickel	0.005	0.22						
125. selenium	0.01	0.20	2	5		5		
126. silver	0.02	0.07	2	5		5		
127. thallium	0.100	0.34	2	5		4	1	
128. zinc	0.050	0.23						
129. 2,3,7,8-tetrachlorodibenzo-p-dioxin (TCDD)								

(a) Analytical quantification concentration was reported with the data (see Section V).

(b) Treatable concentrations are based on performance of lime precipitation, sedimentation, and filtration.

(c), (d), (e) Reported together.

(f) Analytical quantification concentration for EPA Method 335.2, Total Cyanide Methods for Chemical Analysis of Water and Wastes, EPA 600/4-79-020, March 1979.

TABLE VI-2

TOXIC POLLUTANTS NEVER DETECTED

2. acrolein*
3. acrylonitrile*
4. benzene*
5. benzidene*
7. chlorobenzene*
8. 1,2,4-trichlorobenzene*
9. hexachlorobenzene*
10. 1,2-dichloroethane*
11. 1,1,1-trichloroethane*
12. hexachloroethane*
13. 1,1-dichloroethane*
14. 1,1,2-trichloroethane*
15. 1,1,2,2-tetrachloroethane*
16. chloroethane*
17. bis (chloromethyl) ether (deleted)*
18. bis (2-chloroethyl) ether*
19. 2-chloroethyl vinyl ether (mixed)*
20. 2-chloronaphthalene*
22. parachlorometa cresol
25. 1,2-dichlorobenzene*
26. 1,3-dichlorobenzene*
27. 1,4-dichlorobenzene*
28. 3,3'-dichlorobenzidine*
29. 1,1-dichloroethylene*
30. 1,2-trans-dichloroethylene*
32. 1,2-dichloropropane*
33. 1,2-dichloropropylene (1,3-dichloropropene)*
35. 2,4-dinitrotoluene*
36. 2,6-dinitrotoluene*
37. 1,2-diphenylhydrazine*
38. ethylbenzene*
40. 4-chlorophenyl phenyl ether*
41. 4-bromophenyl phenyl ether*
42. bis(2-chloroisopropyl) ether*
43. bis(2-choroethoxy) methane*
45. methyl chloride (chloromethane)*
46. methyl bromide (bromomethane)*
47. bromoform (tribromomethane)*
49. trichlorofluoromethane (deleted)*
50. dichlorodifluoromethane (deleted)*
51. chlorodibromomethane*
52. hexachlorobutadiene*
53. hexachlorocyclopentadiene*
54. isophorone*
56. nitrobenzene*
59. 2,4-dinitrophenol
61. N-nitrosodimethylamine*
62. N-nitrosodiphenylamine*
63. N-nitrosodi-n-propylamine*
69. di-n-octyl phthalate*

TABLE VI-2 (Continued)

TOXIC POLLUTANTS NEVER DETECTED

72. benzo(a)anthracene (1,2-benzanthracene)*
73. benzo (a)pyrene (3,4-benzopyrene)*
74. 3,4-benzofluoranthene*
75. benzo(k)fluoranthane (11,12-benzofluoranthene)*
76. chrysene*
78. anthracene*
79. benzo(ghi)perylene (1,11-benzoperylene)*
81. phenanthrene*
82. dibenzo (a,h)anthracene (1,2,5,6-dibenzanthracene)*
83. indeno (1,2,3-cd)pyrene (w,e,-o-phenylenepyrene)*
87. trichloroethylene*
88. vinyl chloride (chloroethylene)*
89. aldrin*
90. dieldrin*
94. 4,4'-DDD(p,p'TDE)*
105. g-BHC-Delta*
113. toxaphene*
116. asbestos
117. beryllium*
118. cadmium*
119. chromium (Total)*
120. copper*
122. lead*
123. mercury*
124. nickel*
128. zinc*
129. 2,3,7,8-tetrachlorodibenzo-p-dioxin (TCDD)

* Pollutants not analyzed for.

TABLE VI-3

PRIORITY POLLUTANTS NEVER FOUND ABOVE THEIR ANALYTICAL QUANTIFICATION LEVEL

1. acenaphthene
6. carbon tetrachloride (tetrachloromethane)
34. 2,4-dimethylphenol
39. fluoranthene
48. dichlorobromomethane
64. pentachlorophenol
67. butyl benzyl phthalate
80. fluorene
84. pyrene
86. toluene
91. chlordane (technical mixture and metabolites)
92. 4,4'-DDT
93. 4,4'-DDE(p,p'DDX)
95. a-endosulfan-Alpha
96. b-endosulfan-Beta
97. endosulfan sulfate
98. endrin
99. endrin aldehyde
100. heptachlor
101. heptachlor epoxide
102. alpha-BHC
103. beta-BHC
104. r-BHC (lindane)-Gamma
106. PCB-1242 (Arochlor 1242)
107. PCB-1254 (Arochlor 1254)
108. PCB-1221 (Arochlor 1221)
109. PCB-1232 (Arochlor 1232)
110. PCB-1248 (Arochlor 1248)
111. PCB-1260 (Arochlor 1260)
112. PCB-1016 (Arochlor 1016)
114. antimony
121. cyanide (Total)
125. selenium
126. silver

THIS PAGE INTENTIONALLY LEFT BLANK

SECTION VII

CONTROL AND TREATMENT TECHNOLOGIES

The preceding sections of this supplement discussed the sources, flows, and characteristics of the wastewaters generated in the bauxite refining subcategory. This section summarizes the description of these wastewaters and indicates the level of treatment which is currently practiced for each waste stream.

CURRENT CONTROL AND TREATMENT PRACTICES

Control and treatment technologies are discussed in general in Section VII of the General Development Document. The basic principles of these technologies and the applicability to wastewater similar to that found in this subcategory are presented there. This section presents a summary of the control and treatment technologies that are currently applied to each of the sources generating wastewater in this subcategory. As discussed in Section V, wastewater associated with the bauxite refining subcategory is characterized by the presence of treatable concentrations of phenolic compounds and high pH. This analysis is supported by the raw (untreated) wastewater data presented for specific sources in Section V. According to promulgated BPT limitations (40 CFR Part 421, Subpart A), the only allowable discharge of wastewater pollutants for the bauxite refining subcategory is the net precipitation discharge from the red mud impoundment. The other three subdivisions (digester condensate, barometric condenser effluent, and carbonation plant effluent) are all restricted to zero discharge of wastewater pollutants under the promulgated BPT regulation. Three plants in this subcategory currently discharge treated water from the mud impoundment area. One option has been selected for consideration for BPT, BAT, NSPS, and pretreatment based on this waste stream.

MUD IMPOUNDMENT EFFLUENT

Red mud is the major waste stream from bauxite refining operations. It contains the impurities from the bauxite ore as well as by-products formed during the refining process. Red mud is deposited in large ponds where insoluble solids, including the oxides of metallic elements, settle out of suspension. Rainfall from the plant site is often routed to the mud impoundment. Water from the impoundment can be recycled to the plant directly from the mud lake or it can be decanted to a separate clear lake before recycle.

Three plants currently discharge water from the mud impoundment. At one plant, water is discharged after pH adjustment without recycle to the process. At another plant, a portion of the water

which is recycled to the plant from a clear lake is discharged without treatment. The third plant discharges excess stormwater from closed mud lakes after pH adjustment. The remaining five plants in this subcategory currently achieve zero discharge by permanent lagoon impoundment and partial recycle. However, one of these plants is considering a process technology change which would result in a mud impoundment discharge.

CONTROL AND TREATMENT OPTIONS

Although the existing limitations are not being modified, the Agency examined one control and treatment alternative that is applicable to the bauxite refining subcategory to generate the guidance limitations. The option selected for evaluation represents an end-of-pipe treatment technology.

OPTION E

Option E for the bauxite refining subcategory consisted of all control requirements of the existing BPT (no discharge of process wastewater pollutants, and discharge of net precipitation from process wastewater impoundments) plus pH adjustment and activated carbon adsorption treatment of the mud impoundment effluent. Activated carbon adsorption is used to remove organic compounds, including phenolics, from the effluent wastewater. Adjustment of pH is required to ensure consistent removal performance by adsorption and to meet discharge quality standards.

The Agency also considered the use of pH adjustment and chemical oxidation to remove phenolic compounds from the effluent wastewater. Adjustment of pH is required to ensure consistent discharge quality standards. Hydrogen peroxide is suggested for the oxidation of phenols, but other chemicals, such as chlorine dioxide and ozone, may perform satisfactorily.

SECTION VIII

COSTS OF WASTEWATER TREATMENT AND CONTROL

The Agency is not revising the promulgated regulation for discharges from bauxite refining. Therefore there are no costs associated with this rulemaking. This section describes the method used to develop the costs associated with the guidance control and treatment technologies of Option E discussed in Section VII for wastewaters from bauxite refining plants. Plant-by-plant compliance costs for this option were developed. Compliance costs for chemical oxidation were also estimated. The energy requirements of the considered option as well as solid waste and air pollution aspects are also discussed. The General Development Document provides background on the capital and annual costs for the technology discussed herein and the methodology used to develop compliance costs.

TREATMENT OPTIONS COSTED FOR EXISTING SOURCES

As discussed in Section VII, one treatment option has been considered for existing bauxite refining plants. This option is summarized below and is schematically presented in Figure X-1 (page 582).

OPTION E

Option E consists of the BPT requirements with additional control of the mud impoundment discharges by pH adjustment and activated carbon adsorption. The Agency also prepared capital and annual costs for pH adjustment and chemical oxidation of the mud impoundment effluent at one median plant. The calculated costs were much higher in relation to the costs for activated carbon at the same plant, therefore, no further consideration was given to this technology.

COST METHODOLOGY

Plant-by-plant compliance costs have been estimated for this subcategory. The costs for the option in this subcategory are presented in Table VIII-1 (page 573). The major assumptions specific bauxite refining subcategory are discussed briefly below.

(1) The Option E treatment system consists of pH adjustment followed by carbon adsorption. The flows were determined from information provided in the dcp for red mud impoundment discharge flow only. The influent concentrations for phenol and 2-chlorophenol were determined from averages of field sampling data from two plants. These data are found in Table V-5 (page 549).

(2) Costs for pH adjustment were based on reduction of pH from

11.5 to 9 using sulfuric acid.

(3) The carbon exhaustion rate was determined from adsorption isotherms for phenol and 2-chlorophenol, influent concentrations from the sampling data, and an effluent concentration in both cases of 0.010 mg/l. Using this procedure and an excess of 50 percent to account for other adsorbable organics, a carbon exhaustion rate of 2.321 lbs/1000 gallons was determined.

(4) Plants 1076 and 1141 have pH adjustment equipment in place; capital cost estimates are included for all other equipment at the three discharging plants and the one existing zero discharger who is considering a discharge.

NONWATER QUALITY ASPECTS

Nonwater quality impacts specific to the bauxite refining subcategory, including energy requirements, solid waste and air pollution are discussed below.

ENERGY REQUIREMENTS

Energy requirements for Option E are estimated at 11,500,000 kwh/yr. This represents less than 3 percent of the total energy usage of the four plants. It is therefore concluded that the energy requirements of the treatment option considered will not have a significant impact on total plant energy consumption.

SOLID WASTE

No significant amounts of solid wastes are generated by the technologies considered for this regulation in the bauxite refining subcategory. Activated carbon is thermally regenerated either on-site or off-site, and in neither case are appreciable quantities of solid waste generated.

AIR POLLUTION

There is no reason to believe that any substantial air pollution problems will result from implementation of activated carbon treatment and pH adjustment. Thermal regeneration of spent carbon may release trace quantities of pollutants, but these should be readily oxidized at the temperatures under which the carbon is regenerated.

Table VIII-1

COST OF COMPLIANCE FOR THE BAUXITE REFINlNG SUBCATEGORY
DIRECT DISCHARGERS*

(March, 1982 Dollars)

Option	Proposal Total Required Capital Cost	Proposal Total Annual Cost
E	7,600,000	2,980,000

*Includes one plant currently practicing zero discharge of process wastewater.

THIS PAGE INTENTIONALLY LEFT BLANK

SECTION IX

BEST PRACTICABLE TECHNOLOGY CURRENTLY AVAILABLE

BPT limitations for the bauxite refining subcategory were promulgated on April 8, 1974 as Subpart A of 40 CFR Part 421. EPA is not amending these BPT limitations which are reproduced below.

The following limitations establish the quantity or quality of pollutants or pollutant properties which may be discharged by a point source after application of the best practicable control technology currently available: There shall be no discharge of process wastewater pollutants to navigable waters.

During any calendar month, there may be discharged from the overflow of a process wastewater impoundment either a volume of wastewater equal to the difference between the precipitation for that month that falls within the impoundment and the evaporation within the impoundment for that month, or, if greater, a volume of process wastewater equal to the difference between the mean precipitation for that month that falls within the impoundment and the mean evaporation for that month as established by the National Climatic Center, National Oceanic and Atmospheric Administration, for the area in which such impoundment is located (or as otherwise determined if no monthly data have been established by the National Climatic Center).

The data gathered since the original promulgation do not warrant any adjustment in the BPT requirements. Minor amendments to the regulatory language are being promulgated to clarify references to fundamentally different factors (FDF) considerations under 40 CFR Part 125 and references to pretreatment standards under 40 CFR Part 128. As a result, the bauxite refining subcategory will not incur any incremental capital or annual costs to comply with the BPT limitations.

THIS PAGE INTENTIONALLY LEFT BLANK

SECTION X

BEST AVAILABLE TECHNOLOGY ECONOMICALLY ACHIEVABLE

These effluent limitations are based on the best control and treatment technology used by a specific point source within the industrial category or subcategory, or by another industry where it is readily transferable. Emphasis is placed on additional treatment techniques applied at the end of the treatment systems currently used, as well as reduction of the amount of water used and discharged, process control, and treatment technology optimization.

The factors considered in assessing best available technology economically achievable (BAT) include the age of equipment and facilities involved, the process used, process changes, nonwater quality environmental impacts (including energy requirements), and the costs of application of such technology (Section 304(b)(2)(B) of the Clean Water Act). At a minimum, BAT represents the best available technology economically achievable at plants of various ages, sizes, processes, or other characteristics. Where the Agency has found the existing performance to be uniformly inadequate, BAT may be transferred from a different subcategory or category. BAT may include feasible process changes or internal controls, even when not in common industry practice.

The required assessment of BAT considers costs, but does not require a balancing of costs against effluent reduction benefits However, in assessing BAT, the Agency has given substantial weight to the economic achievability of the technology.

TECHNICAL APPROACH TO BAT

In pursuing this second round of effluent limitations, the Agency reviewed a wide range of technology options and evaluated the available possibilities to ensure that the most effective and beneficial technologies were used as the basis of BAT. To accomplish this, the Agency elected to examine one technology option which could be applied to the bauxite refining subcategory as an alternative for the basis of BAT effluent limitations. The treatment technology considered for BAT is summarized below:

Option E (Figure X-1 page 582):

- Zero discharge of process wastewater pollutants
- Discharge of net precipitation from process wastewater impoundments

- pH adjustment
- Activated carbon adsorption

OPTION E

Option E consists of the existing BPT requirements (no discharge of process wastewater pollutants, discharge of net precipitation from a process wastewater impoundment), with pH adjustment and activated carbon adsorption treatment of the net precipitation discharge. Activated carbon technology is used to remove toxic organic compounds, including phenolics, from the effluent wastewater. Adjustment of pH is required to ensure consistent removal performance by adsorption and to meet discharge quality standards.

INDUSTRY COST AND POLLUTANT REMOVAL ESTIMATES

As one means of evaluating the technology option, EPA developed estimates of the pollutant removal estimates and the associated compliance costs. The methodologies are described below.

POLLUTANT REMOVAL ESTIMATES

Sampling data collected during the field sampling program were used to characterize the pollutant concentrations in the waste stream considered for regulation. This information was used with the wastewater discharge rates measured during sampling or derived from each dcp to estimate the mass of toxic pollutants generated by each plant in the bauxite refining subcategory. The mass of pollutant discharged was estimated by multiplying the achievable concentration values attainable by the option (mg/l) by the estimated volume of wastewater discharged by each plant in the subcategory. The mass of pollutant removed, referred to as the benefit, is simply the difference between the estimated mass of pollutant generated by each plant and the mass of pollutant discharged after application of the treatment option. The total subcategory removal was then estimated by summing the individual plant removal estimates for each pollutant. The pollutant removal estimates for the bauxite refining subcategory are presented in Table X-1 (page 580).

COMPLIANCE COSTS

Based on information collected after proposal, the Agency believes that no further revisions to the promulgated BAT limitations are necessary. As a result, the bauxite refining subcategory will not incur any incremental capital or annual costs to comply with the BAT limitations. However, EPA calculated compliance costs for the bauxite refining subcategory by developing a wastewater treatment system design and cost estimation model that estimates capital and annual costs for the treatment option being considered for guidance. This model was applied to each plant's flow and pollutant

characteristics, and the calculated capital and annual costs were summed to arrive at total subcategory costs. These costs, which are presented in Table X-2 (page 583), were used in EPA's economic impact analysis.

BAT OPTION SELECTION

EPA promulgated BAT limitations for the bauxite refining subcategory on April 8, 1974 as Subpart A of 40 CFR Part 421. These limitations allow no discharge of process wastewater pollutants to navigable waters. A discharge is allowed from the overflow of a process wastewater impoundment in a volume equal to the net precipitation that falls within the impoundment. EPA is not promulgating any modification to these limitations at this time. At proposal, EPA was considering the establishment of effluent limitations based on pH adjustment and activated carbon adsorption treatment of toxic organic pollutants in the mud impoundment overflow. This revision was in keeping with the emphasis of the Clean Water Act of 1977 on toxic pollutants.

Implementation of this organics control option would have removed annually an estimated 4,835 kg of priority pollutants from the raw discharge. Estimated capital cost for achieving this option would have been $7.60 million, with estimated annualized costs of $2.98 million.

Activated carbon was being considered because of its ability to remove toxic organics to very low concentrations. Although no plants in the nonferrous metals manufacturing category have installed this technology for organics removal, it is demonstrated in the iron and steel manufacturing category. EPA believes that the influent characteristics are similar with respect to organics for both categories, and that, if proper design procedures are used, similar removals will be achieved. Activated carbon will remove adsorbable organics to essentially nondetectable levels if sufficient carbon and contact time are provided. These design parameters have been carefully and conservatively selected by EPA for this subcategory. Therefore, based on these considerations and the performance data from iron and steel manufacturing a level of 0.010 mg/l for phenol, 2-chlorophenol, and total phenols (4-AAP) can be achieved. The Agency solicited comments on the costs and performance of activated carbon, and the applicability of these effluent limitations to the bauxite refining subcategory.

Commenters on the proposal provided recently collected data from their red mud lakes showing levels below the limit of detection for all phenolic compounds except phenol. The new data submitted indicates that EPA may have overestimated the amounts of phenols in the net precipitation discharge from bauxite red mud lakes. Based on these data, EPA has decided not to promulgate Option E (pH adjustment, activated carbon adsorption) as the technology basis of BAT. EPA has determined that the presence of phenols

may be site-specific and not common to all bauxite manufacturers. Furthermore, EPA's analysis showed no harmful effects on aquatic life, and only some taste and odor effects. EPA is not modifying the existing BAT regulation for the bauxite refining subcategory. However, EPA is publishing limitations, shown at the end of this section, as guidance for permitting authorities to deal with any site-specific high levels of phenolic compounds.

REGULATED POLLUTANT PARAMETERS

The raw wastewater concentrations from individual operations and the subcategory as a whole were examined to select certain pollutants and pollutant parameters for limitation. This examination and evaluation, presented in Section VI, concluded that six pollutants and pollutant parameters are present in bauxite refining wastewaters at concentrations that can be reduced by identified treatment technologies.

The high cost associated with analysis for priority organic pollutants had prompted EPA to consider an alternative method for regulating and monitoring pollutant discharges from the nonferrous metals manufacturing category. Rather than developing specific effluent limitations and standards for each of the organics pollutant found in treatable concentrations in the raw wastewater from a given subcategory, the Agency was considering effluent limitations only for those pollutants generated in the greatest quantities as shown by the pollutant removal estimate analysis. On this basis, the pollutants recommended for specific limitation at proposal are listed below:

24. 2-chlorophenol
65. phenol

By recommending limitations and standards for certain priority organic pollutants, dischargers would attain the same degree of control over priority organic pollutants as they would have been required to achieve had all the priority organic pollutants been directly limited. This approach is technically justified because the design of activated carbon columns must consider the presence of other organic compounds which will be removed from the wastewater. Even though the removal of different phenolic compounds will occur at different rates, treatment of the above listed organics to the concentration values attainable by the option will be accompanied by a reduction in concentration of the unregulated organics. One nonconventional pollutant parameter, total phenols (4-AAP), was being considered for limitation to ensure adequate removal of phenolics other than 2-chlorophenol and phenol. No priority metal pollutants were selected for specific limitation in this subcategory.

The following priority pollutants were not being considered for specific limitation at proposal on the basis that they would be effectively controlled by the limitations

recommended for 2-chlorophenol, phenol, and total phenols (4-AAP):

21. 2,4,6-trichlorophenol
31. 2,4-dichlorophenol
57. 2-nitrophenol
58. 4-nitrophenol

The conventional pollutant parameter pH may be limited by the best conventional technology (BCT) effluent limitations.

EFFLUENT LIMITATIONS

The concentrations achievable by application of pH adjustment and activated carbon are discussed in Section VII of the General Development Document. The recommended effluent limitations for mud impoundment effluent are shown below. These effluent limitations are presented as guidance for state or local pollution control agencies for case-by-case control of phenolics.

RECOMMENDED GUIDANCE FOR BAT EFFLUENT LIMITATIONS FOR THE BAUXITE REFINING SUBCATEGORY

Mud Impoundment Effluent

Pollutant or Pollutant Property	Maximum for Any One Day (mg/l)
2,4,6-trichlorophenol	0.010
2-Chlorophenol	0.010
2,4-dichlorophenol	0.010
4-nitrophenol	0.010
Phenol	0.010
Total Phenols (4-AAP)	0.010

TABLE X-1

POLLUTANT REMOVAL ESTIMATES
BAUXITE REFINING
(Direct Dischargers* - kg/yr)

Pollutant	Total Raw Current	Discharged	Removed
2-chlorophenol	3,125.51	3,125.51	0
phenol	1,868.95	1,868.95	0
Total toxic organics	4,994.45	4,994.45	0
Option E			
2-chlorophenol		79.53	3,045.98
phenol		79.53	1,789.42
Total toxic organics		159.06	4,835.40

* Includes one small plant currently practicing zero discharge of process wastewater.

Table X-2

COST OF COMPLIANCE FOR THE BAUXITE REFINING SUBCATEGORY

Direct Dischargers*

Proposal Option	Capital Cost (1982 Dollars)	Annual Cost (1982 Dollars)
E	7,600,000	2,980,000

*Includes one small plant currently practicing zero discharge of process wastewater.

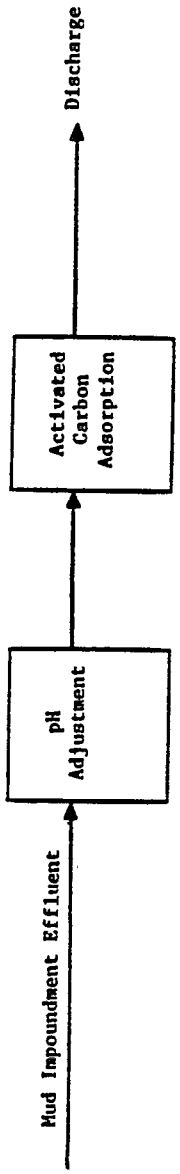

Figure X-1

OPTION E TREATMENT SCHEME FOR THE BAUXITE REFINING SUBCATEGORY

SECTION XI

NEW SOURCE PERFORMANCE STANDARDS

The basis for new source performance standards (NSPS) under Section 306 of the Act is the best available demonstrated technology (BDT). New plants have the opportunity to design the best and most efficient production processes and wastewater treatment technologies without facing the added costs and restrictions encountered in retrofitting an existing plant. Therefore, Congress directed EPA to consider the best demonstrated process changes, in-plant controls, and end-of-pipe treatment technologies which reduce pollution to the maximum extent feasible.

This section describes the technologies for treatment of wastewater from new sources and presents the performance standards recommended as guidance for NSPS in the bauxite refining subcategory, based on the selected treatment technology.

TECHNICAL APPROACH TO NSPS

EPA promulgated new source performance standards for the bauxite refining subcategory on April 8 1974. The technology basis for this promulgation was identical to BAT. EPA is promulgating only minor technical amendments to the promulgated regulation. It is also recommending as guidance the limitations described in the previous section for BAT, i.e., pH adjustment and activated carbon adsorption of mud impoundment overflow. This result is a consequence of careful review by the Agency of a wide range of technology options for new source treatment systems which is discussed in Section XI of the General Development Document. Additionally, there was nothing found to indicate that the wastewater flows and characteristics of new plants would not be similar to those from existing plants, since the processes used by new sources are not expected to differ from those used at existing sources.

The treatment technology considered for the NSPS guidance option is identical to the treatment technology considered for the BAT guidance option. This option is:

OPTION E

- o Zero discharge of process wastewater pollutant
- o Discharge of net precipitation from process wastewater impoundments
- o pH adjustment
- o Activated carbon adsorption

NSPS OPTION SELECTION

As discussed earlier, with the exception of minor technica. amendments, the Agency is not modifying the existing promulgate(regulation for the bauxite refining subcategory. The Agency i: recommending the standards presented at the end of this sectior as guidance for permitting authorities to deal with any site-specific high levels of phenolic compounds.

REGULATED POLLUTANT PARAMETERS

The Agency has no reason to believe that the pollutants that will be found in treatable concentrations in processes within new sources will be any different than with existing sources. Accordingly, pollutants and pollutant parameters being recommended for limitation as guidance under NSPS, in accordance with the rationale of Sections VI and X, are identical to those being recommended for BAT. The conventional pollutant parameter pH is also being recommended as guidance for limitation. For NSPS, the Agency is recommending as guidance pH limitations for mud impoundment effluent within the range of 7.5 to 10.0 at all times.

NEW SOURCE PERFORMANCE STANDARDS

The modified performance standards being recommended as guidance based on pH adjustment and activated carbon adsorption technology are listed below.

RECOMMENDED GUIDANCE FOR NSPS FOR THE BAUXITE REFINING SUBCATEGORY

Mud Impoundment Effluent

Pollutant or Pollutant Property	Maximum for Any One Day (mg/l)
2,4,6-trichlorophenol	0.010
2-Chlorophenol	0.010
2,4-dichlorophenol	0.010
4-nitrophenol	0.010
Phenol	0.010
Total Phenols (4-AAP)	0.010

SECTION XII

PRETREATMENT STANDARDS

EPA is not promulgating pretreatment standards for existing sources at this time because there are currently no indirect discharging facilities in this subcategory.

EPA promulgated PSNS for the bauxite refining subcategory on April 8, 1974 as Subpart A of 40 CFR Part 421. The following limitations establish the quantity or quality of pollutants or pollutant properties which may be discharged by a new indirect discharger: There shall be no discharge of process wastewater pollutants to navigable waters.

During any calendar month, there may be discharged from the overflow of a process wastewater impoundment either a volume of wastewater equal to the difference between the precipitation for that month that falls within the impoundment and the evaporation within the impoundment for that month, or, if greater, a volume of process wastewater equal to the difference between the mean precipitation for that month that falls within the impoundment and the mean evaporation for that month as established by the National Climatic Center, National Oceanic and Atmospheric Administration, for the area in which such impoundment is located (or as otherwise determined if no monthly data have been established by the National Climatic Center).

EPA is not promulgating any modifications to PSNS since it is unlikely that any new bauxite sources will be constructed as indirect dischargers.

THIS PAGE INTENTIONALLY LEFT BLANK

SECTION XIII

BEST CONVENTIONAL POLLUTANT CONTROL TECHNOLOGY

EPA is not promulgating best conventional pollutant control technology (BCT) limitations for the bauxite refining subcategory at this time.

THIS PAGE INTENTIONALLY LEFT BLANK

NONFERROUS METALS MANUFACTURING POINT SOURCE CATEGORY

DEVELOPMENT DOCUMENT SUPPLEMENT

for the

Primary Aluminum Smelting Subcategory

William K. Reilly
Administrator

Rebecca Hanmer
Acting Assistant Administrator for Water

Martha Prothro, Director
Office of Water Regulations and Standards

Thomas P. O'Farrell, Director
Industrial Technology Division

Ernst P. Hall, P.E., Chief
Metals Industry Branch
and
Technical Project Officer

May 1989

U.S. Environmental Protection Agency
Office of Water
Office of Water Regulations and Standards
Industrial Technology Division
Washington, D. C. 20460

TABLE OF CONTENTS

Section		Page
I	SUMMARY AND CONCLUSIONS	603
II	RECOMMENDATIONS	607
III	INDUSTRY PROFILE	627
	Description of Primary Aluminum Production	627
	Raw Materials	627
	Electrolytic Aluminum Production	627
	Reduction Cells	627
	Aluminum Fluxing and Degassing	630
	Casting	632
	Anode Paste Plant	633
	Anode Bake Plant	635
	Cathode Reprocessing	635
	Procecess Wastewater Sources	636
	Other Wastewater Sources	636
	Age, Production, and Process Profile	637
IV	SUBCATEGORIZATION	643
	Factors Considered in Subdividing the Primary Aluminum Subcategory	643
	Other Factors	643
	Type of Anode	643
	Plant Size	644
	Plant Age	644
	Product	644
	Production Normalizing Parameters	644
	Anode and Cathode Paste Plant Wet Air Pollution Control	645
	Cathode Reprocessing	641
	Potline, Potline SO_2, and Potroom Wet Air Pollution Control	645
V	WATER USE AND WASTEWATER CHARACTERISTICS	649
	Wastewater Sources, Discharge Rates, and Characteristics	650
	Anode and Cathode Paste Plant Wet Air Pollution Control	652
	Anode Bake Plant Wet Air Pollution Control	653
	Anode and Briquette Contact Cooling	653
	Cathode Reprocessing	653
	Potline Wet Air Pollution Control	654

TABLE OF CONTENTS (Continued)

Section		Page
V (Cont'd)	Potline SO_2 Wet Air Pollution Control	654
	Potroom Wet Air Pollution Control	654
	Degassing Wet Air Pollution Control	654
	Pot Repair And Pot Soaking	655
	Casting Contact Cooling Water	655
	Pilot Scale Wastewater Treatment Study	656
	PAH Treatment	656
	Cyanide Treatment	657
VI	SELECTION OF POLLUTANT PARAMETERS	725
	Conventional And Nonconventional Pollutant Parameters	725
	Conventional And Nonconventional Pollutants Parameters Selected	726
	Toxic Pollutants	726
	Toxic Pollutants Never Detected	727
	Toxic Pollutants Never Found Above Their Analytical Quantification Level	727
	Toxic Pollutants Present Below Concentrations Achievable By Treatment	727
	Toxic Pollutants Detected In a Small Number Of Sources	727
	Toxic Pollutants Selected For Further Consideration For Limitations	730
VII	CONTROL AND TREATMENT TECHNOLOGIES	743
	Technical Basis Of BPT	743
	Current Control And Treatment Practices	743
	Anode And Cathode Paste Wet Air Pollution Control	744
	Anode Bake Plant Wet Air Pollution Control	744
	Anode And Briquette Contact Cooling	745
	Cathode Reprocessing	745
	Potline And Potroom Wet Air Pollution Control	745
	Pot Repair And Pot Soaking	747
	Degassing Wet Air Pollution Control	747
	Casting Contact Cooling	748
	Control And Treatment Options	748
	Option A	749
	Option B	749
	Option C	749
	Option E	750
	Control And Treatment Options Rejected	750
	Fluoride Treatment Effectiveness Analysis	750
	Treatment Effectiveness Analysis For Potline Srubbers And Cathode Reprocessing Wastewaters	750

TABLE OF CONTENTS (Continued)

Section		Page
VIII	COSTS, ENERGY, AND NONWATER QUALITY ASPECTS	753
	Levels Of Treatment Considered	753
	Option A	753
	Option B	753
	Option C	754
	Option E	754
	Cost Methodology	754
	Nonwater Quality Aspects	755
	Energy Requirements	755
	Solid Waste	755
	Air Pollution	756
IX	BEST PRACTICABLE TECHNOLOGY CURRENTLY AVAILABLE	759
X	BEST AVAILABLE TECHNOLOGY ECONOMICALLY ACHIEVABLE	761
	Technical Approach To BAT	761
	Option A	762
	Option B	763
	Recycle of Anode and Casting Contact Cooling Water Through Cooling Towers	763
	Recycle of Water Used in Wet Air Pollution Control	764
	Option C	764
	Option E	764
	Industry Cost And Pollutant Removal Estimates	764
	Pollutant Removal Eestimate	764
	Compliance Costs	766
	BAT Option Selection	766
	Final Amendments To The Regulation	767
	Treatment Performance	768
	Wastewater Discharge Rates	770
	Anode And Cathode Paste Plant Wet Air Pollution Control Wastewater	771
	Anode Bake Plant Wet Air Pollution Control Wastewater	771
	Anode Contact Cooling And Briquette Quenching Water	772
	Cathode Manufacturing	773
	Cathode Reprocessing	773
	Potline Wet Air Pollution Control Wastewater	774
	Potline SO_2 Wet Air Pollution Control	775
	Potroom Wet Air Pollution Control Wastewater	775

TABLE OF CONTENTS (Continued)

Section		Page
X (Cont'd)	Pot Repair And Pot Soaking	776
	Degassing Wet Air Pollution Control	777
	Direct Chill Casting Contact Cooling	777
	Continuous Rod Casting Contact Cooling	777
	Statuonary Casting Contact Cooling	778
	Shot Casting Contact Cooling	778
	Regulated Pollutant Parameters	778
	Effluent Limitations	781
XI	NEW SOURCE PERFORMANCE STANDARDS	881
	Technical Approach To BDT	813
	Option A	813
	Option B	813
	Option C	814
	Option E	814
	BDT Option Selection	814
	Regulated Pollutant Parameters	816
	New Source Performance Standards	816
XII	PRETREATMENT STANDARDS	835
	Technical Approach To Pretreatment	835
	Pretreatment Standards For Existing Sources	836
	Pretreatment Standards For New Sources	836
	Option A	836
	Option B	836
	Option C	837
	Option E	837
	PSNS Option Selection	837
	Regulated Pollutant Parameters	837
	Pretreatment Standards	838
XIII	BEST CONVENTIONAL POLLUTANT CONTROL TECHNOLOGY	855

PRIMARY ALUMINUM SUBCATEGORY

LIST OF TABLES

Table	Title	Page
III-1	Initial Operating Years (Range) Summary of Plants in the Primary Aluminum Subcategory by Discharge Type	638
III-2	Production Ranges for the Primary Aluminum Subcategory	639
III-3	Summary of Subcategory Processes and Associated Waste Streams	640
IV-1	Production Normalizing Parameters	647
V-1	Water Discharge Rates for Anode and Cathode Paste Plant Wet Air Pollution Control (l/kkg)	659
V-2	Primary Aluminum Sampling Data Anode Paste Plant Wet Air Pollution Control Raw Wastewater	660
V-3	Water Discharge Rates for Anode Bake Plant Wet Air Pollution Control (l/kkg of Anodes Baked)	662
V-4	Primary Aluminum Sampling Data Anode Bake Plant Scrubber Liquor Raw Wastewater	663
V-5	Water Discharge Rates for Anode Contact Cooling and Briquette Quenching (l/kkg of Green Anodes or Briquettes Manufactured)	665
V-6	Primary Aluminum Sampling Data Paste Plant Contact Cooling Water Raw Wastewater	666
V-7	Water Discharge Rates for Cathode Reprocessing (l/kkg of Cryolite Production)	668
V-8	Primary Aluminum Sampling Data Cathode Reprocessing Raw Wastewater	669
V-9	Water Discharge Rates for Potline Wet Air Pollution Control (l/kkg of Aluminum Reduction Production)	784

LIST OF TABLES (Continued)

Table	Title	Page
V-10	Primary Aluminum Sampling Data Potline Wet Air Pollution Control Raw Wastewater	675
V-11	Water Discharge Rates for Potline S02 Wet Air Pollution Control (l/kkg of Aluminum Reduced)	679
V-12	Water Discharge Rates for Potroom Wet Air Pollution Control (l/kkg of Aluminum Reduction Production)	680
V-13	Primary Aluminum Sampling Data Potroom Wet Air Pollution Control Raw Wastewater	681
V-14	Water Discharge Rates for Degassing Wet Air Pollution Control (l/kkg of Aluminum Refined and Degassed)	686
V-15	Primary Aluminum Sampling Data Refining and Degassing Wet Air Pollution Control Raw Wastewater	687
V-16	Water Discharge Rates for Pot Repair-Pot Soaking (l/kkg of Aluminum Reduction Production)	688
V-17	Water Discharge Rates for Direct Chill Casting Contact Cooling (Primary Aluminum Subcategory) (l/kkg of Aluminum Cast)	689
V-18	Water Discharge Rates for Direct Chill Casting Contact Cooling (Aluminum Forming Category)	690
V-19	Water Discharge Rates for Continuous Rod Casting Contact Cooling (l/kkg of Aluminum Cast)	692
V-20	Primary Aluminum Sampling Data Casting Contact Cooling Water Raw Wastewater	693

LIST OF TABLES (Continued)

Table	Title	Page
V-21	Primary Aluminum Sampling Data Miscellaneous Wastewater	695
V-22	Primary Aluminum Sampling Data Treatment Plant Samples - Plant A	701
V-23	Primary Aluminum Sampling Data Treatment Plant Samples - Plant B	702
V-24	Primary Aluminum Sampling Data Treatment Plant Samples - Plant C	704
V-25	Primary Aluminum Sampling Data Treatment Plant Samples - Plant D	706
V-26	Primary Aluminum Sampling Data Treatment Plant Samples - Plant E	708
V-27	Primary Aluminum Sampling Data Treatment Plant Samples - Plant F	710
V-28	Reported Presence or Absence of Toxic Pollutants	712
V-29	Source Water Characteristics	713
V-30	Raw Wastewater Characteristics - Potline Scrubber Blowdown	714
V-31	Concentration of PAH in Potline Raw Wastewater	715
V-32	Sample Data Summary for PAH Analysis in Potline Scrubber Liquor - Clarifier Effluent, Filter Effluent, and Carbon Adsorption Effluent	716
V-33	Sample Data Summary for Metal Removal in Potline Scrubber Liquor - Clarifier and Filter Effluent	717
VI-1	Frequency of Occurrence of Toxic Pollutants Primary Aluminum Raw Wastewater	735

LIST OF TABLES (Continued)

Table	Title	Page
VI-2	Toxic Pollutants Never Detected	739
VI-3	Toxic Pollutants Never Found Above Their Analytical Ouantification Level	741
VI-4	Toxic Pollutants Detected in a Small Number of Sources	742
VIII-1	Cost of Compliance for the Primary Aluminum Subcategory Direct Dischargers (March 1982 - Millions of Dollars)	757
X-1	Current Recycle Practices Within the Primary Aluminum Subcategory	782
X-2	Pollutant Removal Estimates for Primary Aluminum Direct Dischargers Toxic Organics	783
X-3	Pollutant Removal Estimates for Primary Aluminum Direct Dischargers Inorganics - Combined Metals Data Base (CMDB)	784
X-4	Pollutant Removal Estimates for Primary Aluminum Direct Dischargers Inorganics - Alternate Data Base	785
X-5	Pollutant Removal Estimates for Primary Aluminum Inorganics - Total	786
X-6	BAT Wastewater Discharge Rates for the Primary Aluminum Subcategory	787
X-7	BAT Effluent Limitations for the Primary Aluminum Subcategory	789
XI-1	Plants Currently Manufacturing or Capable of Manufacturing High Purity Alloys Using Alternate In-Line Fluxing and Filtering	818

LIST OF TABLES (Continued)

Table	Title	Page
XI-2	NSPS Wastewater Discharge Rates for the Primary Aluminum Subcategory	819
XI-3	NSPS for the Primary Aluminum Subcategory	821
XII-1	PSNS Wastewater Discharge Rates for the Primary Aluminum Subcategory	839
XII-2	PSNS for the Primary Aluminum Subcategory	841

LIST OF FIGURES

Figure	Title	Page
III-1	Primary Aluminum Reduction Process	641
III-2	Geographic Locations of Primary Aluminum Reduction Plants	642
V-1	Sampling Sites at Primary Aluminum Plant A	718
V-2	Sampling Sites at Primary Aluminum Plant B	719
V-3	Sampling Sites at Primary Aluminum Plant C	720
V-4	Sampling Sites at Primary Aluminum Plant D	721
V-5	Sampling Sites at Primary Aluminum Plant E	722
V-6	Sampling Sites at Primary Aluminum Plant F	723
X-1	BAT Treatment Scheme Option A Primary Aluminum Subcategory	808
X-2	BAT Treatment Scheme Option B Primary Aluminum Subcategory	809
X-3	BAT Treatment Scheme Option C Primary Aluminum Subcategory	810
X-4	BAT Treatment Scheme Option E Primary Aluminum Subcategory	811

SECTION I

SUMMARY AND CONCLUSIONS

On April 8, 1974, EPA promulgated technology-based effluent limitations guidelines and performance standards for the primary aluminum smelting subcategory of the Nonferrous Metals Manufacturing Point Source Category. This regulation included BPT, BAT, NSPS, and PSNS limitations. EPA promulgated amendments to BAT, NSPS, and PSNS for this subcategory pursuant to the provisions of the Clean Water Act Amendments of 1977. This supplement provides a compilation and analysis of the background material used to develop these amended effluent limitations and standards.

On March 8, 1984 (49FR8742) EPA promulgated final amendments to 40 CFR Part 421, substantially revising BAT limitations and new source and pretreatment standards for both primary and secondary aluminum smelting. After promulgation of these amendments, the Aluminum Association, Kaiser Aluminum and Chemical Corp., Reynolds Metals Company, the Aluminum Recycling Association, and others filed petitions to review the regulation. In November 1985 these four parties entered into two settlement agreements which resolved issues raised by the petitioners related to the primary aluminum and secondary aluminum subcategories. In accordance with these Settlement Agreements, EPA published a notice of proposed rulemaking on May 20, 1986 and solicited comments.

EPA then promulgated final amendments to the regulation for the Primary Aluminum Subcategory on July 7, 1987 (52 FR 25552) concerning four topics, which are summarized here.

The BAT limitations for benzo(a)pyrene were amended in two respects: first, to incorporate variability factors into the daily maximum and monthly average limitations; and second, to only provide discharge allowances for benzo(a)pyrene to those processes which generate this substance. Further, clarification is provided on 2 items related to regulation of benzo(a)pyrene.

The BAT limitations and NSPS and PSNS for fluoride are amended to be based upon the pooled variability factors calculated from data for seven metal pollutants in the combined metals data base, namely 4.10 and 1.82 for the daily and monthly variability factors, respectively. This amendment was made because of petitioners concerns about the presence of complex fluoride ions and aluminum salts in the wastewater.

Brief guidance is provided on the treatment values that permit writers may provide for spent potliner leachate, even though EPA considers spent potliner leachate to be a non-process and therefore a non-scope flow.

The NSPS pH standards for direct chill casting contact cooling water are amended to a range of 6.0 to 10.0 standard units at all

times.

The primary aluminum subcategory is comprised of 31 plants. Of the 31 plants, 24 discharge directly to rivers, lakes, or streams; none discharge to publicly owned treatment works (POTW); and seven achieve zero discharge of process wastewater.

EPA first examined the primary aluminum subcategory to determine whether differences in raw materials, final products, manufacturing processes, equipment, age and size of plants, and water usage required the development of separate effluent limitations and standards for different segments of the subcategory. This involved a detailed analysis of wastewater discharge and treated effluent characteristics, including (1) the sources and volume of water used, the processes employed, and the sources of pollutants and wastewaters in the plant; and (2) the constituents of wastewaters, including toxic pollutants.

Several distinct control and treatment technologies (both in-plant and end-of-pipe) applicable to the primary aluminum subcategory were identified. The Agency analyzed both historical and newly generated data on the performance of these technologies, including their nonwater quality environmental impacts (air quality impacts and solid waste generation) and energy requirements. EPA also studied various flow reduction techniques reported in the data collection portfolios (dcp) and plant visits.

Engineering costs were prepared for each of the control and treatment options considered for the subcategory. These costs were then used by the Agency to estimate the impact of implementing the various options on the industry. For each control and treatment option that the Agency found to be most effective and technically feasible in controlling the discharge of pollutants, the number of potential closures, number of employees affected, and impact on price were estimated. These results are reported in a separate document entitled "The Economic Impact Analysis of Effluent Limitations and Guidelines and Standards for the Nonferrous Smelting and Refining Industry".

Based on consideration of the above factors, EPA identified various control and treatment technologies which formed the basis for BAT and selected control and treatment appropriate for each set of standards and limitations. The mass limitations and standards for BAT, NSPS, and PSNS are presented in Section II.

For BAT, the Agency has built upon the BPT basis of lime precipitation and sedimentation by adding in-process control technologies which include recycle of process water from air pollution control and metal contact cooling waste streams. Filtration is added as an effluent polishing step to further reduce metals, toxic organics, and suspended solids concentrations. In addition, cyanide precipitation is added to control cyanide. To meet the BAT effluent limitations based on this technology, the primary aluminum smelting subcategory is estimated to incur a

capital cost of $10.5 million (March, 1982 dollars) and an annual cost of $16 million (March, 1982 dollars).

The best demonstrated technology (BDT), which is the technical basis of NSPS, is equivalent to BAT for most waste streams. In selecting BDT, EPA recognizes that new plants have the opportunity to implement the best and most efficient manufacturing processes and treatment technology. As such, the technology basis of NSPS for the removal of toxic organics present in scrubber wastewater from anode paste plants, anode bake plants, and pot lines, is dry alumina air pollution scrubbing systems. Potroom scrubbing is eliminated based on efficient capture of emissions with potline scrubbers. Degassing wet air pollution control is eliminated through in-line fluxing and filtering. Treatment of toxic metals and toxic organics is based upon lime precipitation, sedimentation, and filtration. Cyanide precipitation is the basis for the control of cyanide, and oil skimming is included for the control of oil and grease.

The Agency is not promulgating pretreatment standards for existing sources (PSES) since there are no indirect discharging plants in the primary aluminum subcategory. The technology basis for pretreatment standards for new sources (PSNS) is the best demonstrated technology, and the PSNS are identical to NSPS for all building blocks.

THIS PAGE INTENTIONALLY LEFT BLANK

SECTION II

RECOMMENDATIONS

EPA has divided the primary aluminum subcategory into 12 subdivisions or building blocks for the purpose of effluent limitations and standards. These building blocks are:

(a) Anode and cathode paste plant wet air pollution control
(b) Anode bake plant wet air pollution control
(c) Cathode reprocessing
(d) Anode and briquette contact cooling
(e) Potline wet air pollution control
(f) Potline SO2 wet air pollution control
(g) Potroom wet air pollution control
(h) Degassing wet air pollution control
(i) Pot repair and pot soaking
(j) Direct chill casting contact cooling
(k) Continuous rod casting contact cooling
(l) Stationary and shot casting contact cooling

EPA promulgated BPT, BAT, NSPS, and PSNS effluent limitations for the primary aluminum subcategory on April 8, 1974 as Subpart B of 40 CFR Part 421. Unlike this rulemaking, the limitations and standards were developed for the entire aluminum smelting process, not on the basis of individual building blocks. BPT was promulgated based on effluent concentrations achievable by the application of chemical precipitation and sedimentation (lime and settle) technology and average process wastewater flowrates. For this rulemaking, EPA is not modifying these BPT limitations.

The following BPT effluent limitations were promulgated:

Pollutant or Pollutant Property	Maximum for Any One Day	Maximum for Monthly Average
	Metric Units - kg/kkg of product English Units - lbs/1,000 lbs of product	
Fluoride	2.0	1.0
Total Suspended Solids	3.0	1.5
pH	Within the range of 6 to 9 at all times	

EPA is modifying the BAT effluent limitations to take into account pollutant concentrations achievable by the application of chemical precipitation, sedimentation, and multimedia filtration (lime, settle, and filter) technology and in-process flow reduction control methods, along with preliminary treatment consisting of cyanide precipitation with ferrous sulfate for

selected waste streams. The following BAT effluent limitations are promulgated for existing sources:

(a) Anode and Cathode Paste Plant Wet Air Pollution Control BAT

Pollutant or Pollutant Property	Maximum for Any One Day	Maximum for Monthly Average
Metric Units - mg/kg of paste produced English Units - lbs/million lbs of paste produced		
Benzo(a)pyrene	0.005	0.002
Antimony	0.263	0.117
Nickel	0.075	0.050
Aluminum	0.831	0.369
Fluoride	8.092	3.591

(b) Anode Contact Cooling and Briquette Quenching BAT

Pollutant or Pollutant Property	Maximum for Any One Day	Maximum for Monthly Average
Metric Units - mg/kg of anodes cast English Units - lbs/million lbs of anodes cast		
Benzo(a)pyrene	0.007	0.003
Antimony	0.403	0.180
Nickel	0.115	0.077
Aluminum	1.277	0.566
Fluoride	12.440	5.518

(c) Anode Bake Plant Wet Air Pollution Control (Closed top ring furnace) BAT

Pollutant or Pollutant Property	Maximum for Any One Day	Maximum for Monthly Average
Metric Units - mg/kg of anodes baked English Units - lbs/million lbs of anodes baked		
Benzo(a)pyrene	0.146	0.067
Antimony	8.346	3.719
Nickel	2.378	1.600
Aluminum	26.420	11.720
Fluoride	257.300	114.200

(d) Anode Bake Plant Wet Air Pollution Control (Open top ring furnace with spray tower only) BAT

Pollutant or Pollutant Property	Maximum for Any One Day	Maximum for Monthly Average
Metric Units - mg/kg of anodes baked English Units - lbs/million lbs of anodes baked		
Benzo(a)pyrene	0.002	0.001
Antimony	0.097	0.043
Nickel	0.028	0.019
Aluminum	0.306	0.136
Fluoride	2.975	1.320

(e) Anode Bake Plant Wet Air Pollution Control (Open top ring furnace with wet electrostatic precipitator and spray tower) BAT

Pollutant or Pollutant Property	Maximum for Any One Day	Maximum for Monthly Average
Metric Units - mg/kg of anodes baked English Units - lbs/million lbs of anodes baked		
Benzo(a)pyrene	0.025	0.011
Antimony	1.409	0.628
Nickel	0.402	0.270
Aluminum	4.461	1.979
Fluoride	43.440	19.270

(f) Anode Bake Plant Wet Air Pollution Control (Tunnel kiln) BAT

Pollutant or Pollutant Property	Maximum for Any One Day	Maximum for Monthly Average
Metric Units - mg/kg of anodes baked English Units - lbs/million lbs of anodes baked		
Benzo(a)pyrene	0.038	0.018
Antimony	2.197	0.979
Nickel	0.626	0.421
Aluminum	6.953	3.084
Fluoride	67.710	30.050

(g) Cathode Reprocessing (Operated with dry potline scrubbing and not commingled with other process or nonprocess waters) BAT

Pollutant or Pollutant Property	Maximum for Any One Day	Maximum for Monthly Average
Metric Units - mg/kg of cryolite recovered English Units - lbs/million lbs of cryolite recovered		
Benzo(a)pyrene	1.181	0.547
Antimony	420.400	189.200
Cyanide	157.600	70.060
Nickel	80.570	35.030
Aluminum	273.200	122.600
Fluoride	29,430.000	13,310.000

(h) Cathode Reprocessing (Operated with dry potline scrubbing and commingled with other process or nonprocess waters) BAT

Pollutant or Pollutant Property	Maximum for Any One Day	Maximum for Monthly Average
Metric Units - mg/kg of cryolite recovered English Units - lbs/million lbs of cryolite recovered		
Benzo(a)pyrene	1.181	0.547
Antimony	67.610	30.120
Cyanide	157.600	70.060
Nickel	19.270	12.960
Aluminum	214.000	94.930
Fluoride	2,084.000	924.800

(i) Cathode Reprocessing (Operated with wet potline scrubbing) BAT

Pollutant or Pollutant Property	Maximum for Any One Day	Maximum for Monthly Average
Metric Units - mg/kg of cryolite recovered English Units - lbs/million lbs of cryolite recovered		
Benzo(a)pyrene	0.000	0.000
Antimony	0.000	0.000
Cyanide	0.000	0.000
Nickel	0.000	0.000
Aluminum	0.000	0.000
Fluoride	0.000	0.000

(j) Potline Wet Air Pollution Control (Operated without cathode reprocessing) BAT

Pollutant or Pollutant Property	Maximum for Any One Day	Maximum for Monthly Average
Metric Units - mg/kg of aluminum produced from electrolytic reduction		
English Units - lbs/million lbs of aluminum produced from electrolytic reduction		
Benzo(a)pyrene	0.028	0.013
Antimony	1.618	0.721
Nickel	0.461	0.310
Aluminum	5.120	2.271
Fluoride	49.860	22.130

(k) Potline Wet Air Pollution Control (Operated with cathode reprocessing and not commingled with other process or nonprocess waters) BAT

Pollutant or Pollutant Property	Maximum for Any One Day	Maximum for Monthly Average
Metric Units - mg/kg of aluminum produced from electrolytic reduction		
English Units - lbs/million lbs of aluminum produced from electrolytic reduction		
Benzo(a)pyrene	0.028	0.013
Antimony	10.060	4.525
Cyanide	3.771	1.676
Nickel	1.928	0.838
Aluminum	6.537	2.993
Fluoride	703.900	318.500

(l) Potline Wet Air Pollution Control (Operated with cathode reprocessing and commingled with other process or nonprocess wastewaters) BAT

Pollutant or Pollutant Property	Maximum for Any One Day	Maximum for Monthly Average
Metric Units - mg/kg of aluminum produced from electrolytic reduction		
English Units - lbs/million lbs of aluminum produced from electrolytic reduction		
Benzo(a)pyrene	0.028	0.013
Antimony	1.618	0.721
Cyanide	3.771	1.676
Nickel	0.461	0.310
Aluminum	5.120	2.271
Fluoride	49.860	22.130

(m) Potroom Wet Air Pollution Control BAT

Pollutant or Pollutant Property	Maximum for Any One Day	Maximum for Monthly Average
Metric Units - mg/kg of aluminum produced from electrolytic reduction		
English Units - lbs/million lbs of aluminum produced from electrolytic reduction		
Benzo(a)pyrene	0.056	0.026
Antimony	3.204	1.428
Nickel	0.913	0.614
Aluminum	10.140	4.499
Fluoride	98.770	43.830

(n) Potline SO_2 Emissions Wet Air Pollution Control BAT

Pollutant or Pollutant Property	Maximum for Any One Day	Maximum for Monthly Average
Metric Units - mg/kg of aluminum produced from electrolytic reduction		
English Units - lbs/million lbs of aluminum produced from electrolytic reduction		
Benzo(a)pyrene	0.045	0.021
Antimony	2.588	1.153
Cyanide	0.738	0.496
Nickel	8.194	3.634
Aluminum	79.790	35.400
Fluoride		

(o) Degassing Wet Air Pollution Control BAT

Pollutant or Pollutant Property	Maximum for Any One Day	Maximum for Monthly Average
Metric Units - mg/kg of aluminum produced from electrolytic reduction		
English Units - lbs/million lbs of aluminum produced from electrolytic reduction		
Benzo(a)pyrene	(1)	(1)
Antimony	5.036	2.244
Nickel	1.435	0.965
Aluminum	15.940	7.071
Fluoride	155.300	68.880

(1) There shall be no discharge allowance for this pollutant

(p) Pot Repair and Pot Soaking BAT

Pollutant or Pollutant Property	Maximum for Any One Day	Maximum for Monthly Average
Metric Units - mg/kg of aluminum produced from electrolytic reduction		
English Units - lbs/million lbs of aluminum produced from electrolytic reduction		
Benzo(a)pyrene	0.000	0.000
Antimony	0.000	0.000
Nickel	0.000	0.000
Aluminum	0.000	0.000
Fluoride	0.000	0.000

(q) Direct Chill Casting Contact Cooling BAT

Pollutant or Pollutant Property	Maximum for Any One Day	Maximum for Monthly Average
Metric Units - mg/kg of aluminum product from direct chill casting English Units - lbs/million lbs of aluminum product from direct chill casting		
Benzo(a)pyrene	(1)	(1)
Antimony	2.565	1.143
Nickel	0.731	0.492
Aluminum	8.120	3.602
Fluoride	79.080	35.090

(r) Continuous Rod Casting Contact Cooling BAT

Pollutant or Pollutant Property	Maximum for Any One Day	Maximum for Monthly Average
Metric Units - mg/kg of aluminum product from rod casting English Units - lbs/million lbs of aluminum product from rod casting		
Benzo(a)pyrene	(1)	(1)
Antimony	0.201	0.089
Nickel	0.057	0.038
Aluminum	0.636	0.282
Fluoride	6.188	2.746

(1) There shall be no discharge allowance for this pollutant

(s) Stationary Casting or Shot Casting Contact Cooling BAT

Pollutant or Pollutant Property	Maximum for Any One Day	Maximum for Monthly Average
Metric Units - mg/kg of aluminum product from stationary casting or shot casting English Units - lbs/million lbs of aluminum product from stationary casting or shot casting		
Benzo(a)pyrene	0.000	0.000
Antimony	0.000	0.000
Nickel	0.000	0.000
Aluminum	0.000	0.000
Fluoride	0.000	0.000

EPA is modifying NSPS based on the effluent concentrations achievable by the application of chemical precipitation, sedimentation, and multimedia filtration (lime, settle, and filter) technology and elimination of pollutant discharges from air pollution control through the use of dry scrubbing, along with preliminary treatment consisting of oil skimming and cyanide precipitation with ferrous sulfate for selected waste streams. The following effluent standards are promulgated for new sources:

(a) Anode and Cathode Paste Plant Wet Air Pollution Control NSPS

Pollutant or Pollutant Property	Maximum for Any One Day	Maximum for Monthly Average
Metric Units - mg/kg of paste produced English Units - lbs/million lbs of paste produced		
Benzo(a)pyrene	0.000	0.000
Antimony	0.000	0.000
Nickel	0.000	0.000
Aluminum	0.000	0.000
Fluoride	0.000	0.000
Oil and Grease	0.000	0.000
TSS	0.000	0.000
pH	Within the range of 7.0 to 10.0 at all times	

(b) Anode Contact Cooling and Briquette Quenching NSPS

Pollutant or Pollutant Property	Maximum for Any One Day	Maximum for Monthly Average
Metric Units - mg/kg of anodes cast English Units - lbs/million lbs of anodes cast		
Benzo(a)pyrene	0.007	0.003
Antimony	0.403	0.180
Nickel	0.115	0.077
Aluminum	1.277	0.566
Fluoride	12.440	5.518
Oil and Grease	2.090	2.090
TSS	3.135	2.508
pH	Within the range of 7.0 to 10.0 at all times	

(c) Anode Bake Plant Wet Air Pollution Control NSPS

Pollutant or Pollutant Property	Maximum for Any One Day	Maximum for Monthly Average
Metric Units - mg/kg of anodes baked English Units - lbs/million lbs of anodes baked		
Benzo(a)pyrene	0.000	0.000
Antimony	0.000	0.000
Nickel	0.000	0.000
Aluminum	0.000	0.000
Fluoride	0.000	0.000
Oil and Grease	0.000	0.000
TSS	0.000	0.000
pH	Within the range of 7.0 to 10.0 at all times	

(d) Cathode Reprocessing NSPS (Operated with dry potline scrubbing and not commingled with other process or nonprocess waters)

Pollutant or Pollutant Property	Maximum for Any One Day	Maximum for Monthly Average
Metric Units - mg/kg of cryolite recovered English Units - lbs/million lbs of cryolite recovered		
Benzo(a)pyrene	1.181	0.547
Antimony	420.400	189.200
Cyanide	157.600	70.060
Nickel	80.570	35.030
Aluminum	273.200	122.600
Fluoride	29,430.000	13,310.000
Oil and Grease	350.300	350.300
TSS	2,172.000	945.800
pH	Within the range of 7.0 to 10.0 at all times	

(e) Cathode Reprocessing NSPS (Operated with dry potline scrubbing and commingled with other process or nonprocess waters)

Pollutant or Pollutant Property	Maximum for Any One Day	Maximum for Monthly Average
Metric Units - mg/kg of cryolite recovered English Units - lbs/million lbs of cryolite recovered		
Benzo(a)pyrene	1.181	0.547
Antimony	67.610	30.130
Cyanide	157.600	70.060
Nickel	19.270	12.960
Aluminum	214.000	94.930
Fluoride	2,084.000	924.800
Oil and Grease	350.300	350.300
TSS	2,172.000	945.800
pH	Within the range of 7.0 to 10.0 at all times	

(f) Potline Wet Air Pollution Control NSPS

Pollutant or Pollutant Property	Maximum for Any One Day	Maximum for Monthly Average
Metric Units - mg/kg of aluminum produced from electrolytic reduction English Units - lbs/million lbs of aluminum produced from electrolytic reduction		
Benzo(a)pyrene	0.000	0.000
Antimony	0.000	0.000
Nickel	0.000	0.000
Aluminum	0.000	0.000
Fluoride	0.000	0.000
Oil and Grease	0.000	0.000
TSS	0.000	0.000
pH	Within the range of 7.0 to 10.0 at all times	

(g) Potroom Wet Air Pollution Control NSPS

Pollutant or Pollutant Property	Maximum for Any One Day	Maximum for Monthly Average
Metric Units - mg/kg of aluminum produced from electrolytic reduction English Units - lbs/million lbs of aluminum produced from electrolytic reduction		
Benzo(a)pyrene	0.000	0.000
Antimony	0.000	0.000
Cyanide	0.000	0.000
Nickel	0.000	0.000
Aluminum	0.000	0.000
Fluoride	0.000	0.000
Oil and Grease	0.000	0.000
TSS	0.000	0.000
pH	Within the range of 7.0 to 10.0 at all times	

(h) Potline SO_2 Emissions Wet Air Pollution Control NSPS

Pollutant or Pollutant Property	Maximum for Any One Day	Maximum for Monthly Average
Metric Units - mg/kg of aluminum produced from electrolytic reduction English Units - lbs/million lbs of aluminum produced from electrolytic reduction		
Benzo(a)pyrene	0.045	0.021
Antimony	2.588	1.153
Nickel	0.738	0.496
Aluminum	8.194	3.634
Fluoride	79.790	35.400
Oil and Grease	13.410	13.410
Total Suspended Solids	20.120	16.090
pH	Within the range of 7.0 to 10.0 at all times	

(i) Degassing Wet Air Pollution Control NSPS

Pollutant or Pollutant Property	Maximum for Any One Day	Maximum for Monthly Average
Metric Units - mg/kg of aluminum produced from electrolytic reduction English Units - lbs/million lbs of aluminum produced from electrolytic reduction		
Benzo(a)pyrene	0.000	0.000
Antimony	0.000	0.000
Nickel	0.000	0.000
Aluminum	0.000	0.000
Fluoride	0.000	0.000
Oil and Grease	0.000	0.000
TSS	0.000	0.000
pH	Within the range of 7.0 to 10.0 at all times	

(j) Pot Repair and Pot Soaking NSPS

Pollutant or Pollutant Property	Maximum for Any One Day	Maximum for Monthly Average
Metric Units - mg/kg of aluminum produced from electrolytic refining English Units - lbs/million lbs of aluminum produced from electrolytic reduction		
Benzo(a)pyrene	0.000	0.000
Antimony	0.000	0.000
Nickel	0.000	0.000
Aluminum	0.000	0.000
Fluoride	0.000	0.000
Oil and Grease	0.000	0.000
TSS	0.000	0.000
pH	Within the range of 7.0 to 10.0 at all times	

(k) Direct Chill Casting Contact Cooling NSPS

Pollutant or Pollutant Property	Maximum for Any One Day	Maximum for Monthly Average
Metric Units - mg/kg of aluminum product from direct chill casting English Units - lbs/million lbs of aluminum product from direct chill casting		
Benzo(a)pyrene	(1)	(1)
Antimony	2.565	1.143
Nickel	0.731	0.492
Aluminum	8.120	3.602
Fluoride	79.080	35.090
Oil and Grease	13.290	13.290
TSS	19.940	15.950
pH	(2)	(2)

(1) There shall be no discharge allowance for this pollutant.

(2) The pH shall be maintained within the range of 7.0 to 10.0 at all times except for those situations when this waste is discharged separately and without commingling with any other wastewater in which case the pH shall be within the range of 6.0 to 10.0 at all times.

(l) Continuous Rod Casting Contact Cooling NSPS

Pollutant or Pollutant Property	Maximum for Any One Day	Maximum for Monthly Average
Metric Units - mg/kg of aluminum product from rod casting English Units - lbs/million lbs of aluminum product from rod casting		
Benzo(a)pyrene	(l)	(l)
Antimony	0.201	0.089
Nickel	0.057	0.038
Aluminum	0.636	0.282
Fluoride	6.188	2.746
Oil and Grease	1.040	1.040
TSS	1.560	1.248
pH	Within the range of 7.0 to 10.0 at all times	

(m) Stationary Casting or Shot Casting Contact Cooling NSPS

Pollutant or Pollutant Property	Maximum for Any One Day	Maximum for Monthly Average
Metric Units - mg/kg of aluminum product from stationary casting or shot casting English Units - lbs/million lbs of aluminum product from stationary casting or shot casting		
Benzo(a)pyrene	0.000	0.000
Antimony	0.000	0.000
Nickel	0.000	0.000
Aluminum	0.000	0.000
Fluoride	0.000	0.000
Oil and Grease	0.000	0.000
TSS	0.000	0.000
pH	Within the range of 7.0 to 10.0 at all times	

EPA is not promulgating pretreatment standards for existing sources (PSES) for the primary aluminum subcategory since there are no existing indirect dischargers.

EPA is modifying PSNS based on the effluent concentrations achievable by the application of chemical precipitation, sedimentation, and multimedia filtration (lime, settle, and

filter) technology and elimination of pollutant discharges through the use of dry scrubbing, along with preliminary treatment consisting of cyanide precipitation with ferrous sulfate for selected waste streams. The following pretreatment standards are promulgated for new sources:

(a) Anode and Cathode Paste Plant Wet Air Pollution Control PSNS

Pollutant or Pollutant Property	Maximum for Any One Day	Maximum for Monthly Average
Metric Units - mg/kg of paste produced English Units - lbs/million lbs of paste produced		
Benzo(a)pyrene	0.000	0.000
Nickel	0.000	0.000
Fluoride	0.000	0.000

(b) Anode Contact Cooling and Briquette Quenching PSNS

Pollutant or Pollutant Property	Maximum for Any One Day	Maximum for Monthly Average
Metric Units - mg/kg of anodes cast English Units - lbs/million lbs of anodes cast		
Benzo(a)pyrene	0.007	0.003
Nickel	0.115	0.077
Fluoride	12.440	5.518

(c) Anode Bake Plant Wet Air Pollution Control PSNS

Pollutant or Pollutant Property	Maximum for Any One Day	Maximum for Monthly Average
Metric Units - mg/kg of anodes baked English Units - lbs/million lbs of anodes baked		
Benzo(a)pyrene	0.000	0.000
Nickel	0.000	0.000
Fluoride	0.000	0.000

(d) Cathode Reprocessing PSNS (Operated with dry potline scrubbing and not commingled with other process or nonprocess waters)

Pollutant or Pollutant Property	Maximum for Any One Day	Maximum for Monthly Average
Metric Units - mg/kg of cryolite recovered English Units - lbs/million lbs of cryolite recovered		
Benzo(a)pyrene	1.181	0.547
Cyanide	157.600	70.060
Nickel	80.570	35.030
Fluoride	29,430.000	13,310.000

(e) Cathode Reprocessing PSNS (Operated with dry potline scrubbing and commingled with other process or nonprocess waters)

Pollutant or Pollutant Property	Maximum for Any One Day	Maximum for Monthly Average
Metric Units - mg/kg of cryolite recovered English Units - lbs/million lbs of cryolite recovered		
Benzo(a)pyrene	1.181	0.547
Cyanide	157.600	70.060
Nickel	19.270	12.960
Fluoride	2,084.000	924.800

(f) Potline Wet Air Pollution Control PSNS

Pollutant or Pollutant Property	Maximum for Any One Day	Maximum for Monthly Average
Metric Units - mg/kg of aluminum produced from electrolytic reduction English Units - lbs/million lbs of aluminum produced from electrolytic reduction		
Benzo(a)pyrene	0.000	0.000
Nickel	0.000	0.000
Fluoride	0.000	0.000

(g) Potroom Wet Air Pollution Control PSNS

Pollutant or Pollutant Property	Maximum for Any One Day	Maximum for Monthly Average
Metric Units - mg/kg of aluminum produced from electrolytic reduction		
English Units - lbs/million lbs of aluminum produced from electrolytic reduction		
Benzo(a)pyrene	0.000	0.000
Nickel	0.000	0.000
Fluoride	0.000	0.000

(h) Potline SO2 Emissions Wet Air Pollution Control PSNS

Pollutant or Pollutant Property	Maximum for Any One Day	Maximum for Monthly Average
Metric Units - mg/kg of aluminum produced from electrolytic reduction		
English Units - lbs/million lbs of aluminum produced from electrolytic reduction		
Benzo(a)pyrene	0.045	0.021
Nickel	0.738	0.496
Fluoride	79.790	35.400

(i) Degassing Wet Air Pollution Control PSNS

Pollutant or Pollutant Property	Maximum for Any One Day	Maximum for Monthly Average
Metric Units - mg/kg of aluminum produced from electrolytic reduction		
English Units - lbs/million lbs of aluminum produced from electrolytic reduction		
Benzo(a)pyrene	0.000	0.000
Nickel	0.000	0.000
Fluoride	0.000	0.000

(j) Pot Repair and Pot Soaking PSNS

Pollutant or Pollutant Property	Maximum for Any One Day	Maximum for Monthly Average
Metric Units - mg/kg of aluminum produced from electrolytic reduction English Units - lbs/million lbs of aluminum produced from electrolytic reduction		
Benzo(a)pyrene	0.000	0.000
Nickel	0.000	0.000
Fluoride	0.000	0.000

(k) Direct Chill Casting Contact Cooling PSNS

Pollutant or Pollutant Property	Maximum for Any One Day	Maximum for Monthly Average
Metric Units - mg/kg of aluminum product from direct chill casting English Units - lbs/million lbs of aluminum product from direct chill casting		
Benzo(a)pyrene	(1)	(1)
Nickel	0.731	0.492
Fluoride	79.080	35.090

(l) Continuous Rod Casting Contact Cooling PSNS

Pollutant or Pollutant Property	Maximum for Any One Day	Maximum for Monthly Average
Metric Units - mg/kg of aluminum product from rod casting English Units - lbs/million lbs of aluminum product from rod casting		
Benzo(a)pyrene	(1)	(1)
Nickel	0.057	0.038
Fluoride	6.188	2.746

(m) Stationary Casting or Shot Casting Contact Cooling PSNS

Pollutant or Pollutant Property	Maximum for Any One Day	Maximum for Monthly Average
Metric Units - mg/kkg of aluminum product from stationary casting or shot casting English Units - lbs/billion lbs of aluminum product from stationary casting or shot casting		
Benzo(a)pyrene	0.000	0.000
Nickel	0.000	0.000
Fluoride	0.000	0.000

SECTION III

INDUSTRY PROFILE

This section of the Primary Aluminum Supplement describes the raw materials and processes used in reducing alumina to aluminum and presents a profile of the primary aluminum plants identified in this study.

DESCRIPTION OF PRIMARY ALUMINUM PRODUCTION

All primary aluminum produced in the United States is manufactured by the electrolytic reduction of alumina via the Hall-Heroult Process. Figure III-1 (page 641) is a block flow diagram depicting the various process steps involved in the manufacture of primary aluminum. The discussion that follows provides a summary of the processes used in the smelting of aluminum, with particular emphasis on where water is used.

RAW MATERIALS

The principal raw materials used in primary aluminum reduction are alumina, metallurgical or petroleum coke, pitch, cryolite, and aluminum fluoride. Alumina is the product of bauxite refining.

ELECTROLYTIC ALUMINUM PRODUCTION

The manufacture of aluminum using the Hall-Heroult Process is discussed in the following sections.

Reduction Cells

The electrolytic cells used in the Hall-Heroult Process are called pots. These pots, ranging in size from 1.8 x 5.5 to 4.3 x 12.8 meters (6 x 18 to 14 x 42 feet), are made of cast iron and lined with carbon. This carbon lining serves as the cathode in the electrolytic circuit, collecting aluminum ions from the electrolyte. In the primary aluminum industry, large numbers of these pots (from 100 to 250 cells) are hooked electrically in series. This forms the potline, the basic production unit of the reduction plant. Potlines are generally contained in one or two long, ventilated buildings called potrooms.

The electrolyte is a solution of alumina in molten cryolite, a double fluoride salt of calcium and aluminum. Alumina is periodically added to and dissolved in the molten electrolyte to maintain the alumina concentration. The cells are heated to about 950°C, and an electrical current is passed through the molten cryolite to force the aluminum ions to migrate to the

cathode, where they are reduced to aluminum. The molten aluminum, because of its heavier weight, collects in the bottom of the pot, forming a layer beneath the cryolite-alumina solution.

The anode is the electrical counterpart of the cathode in the electrolytic cell. The anode used in the primary aluminum industry is made from coal tar pitch and coke and when electrically connected is given a positive charge. This positive charge attracts negative ions from the cryolite solution, transferring the positive charge to the aluminum. This is the manner in which the positive aluminum ions, which are attracted to the negatively charged cathode, are formed. Additionally, the carbon anode reacts with by-product oxygen to form carbon monoxide and carbon dioxide. Thus, the anode is consumed by the process of charge transfer and must be replaced periodically. Potline cells are generally operated with currents ranging from 80,000 to 100,000 amperes. Anodes used in the Hall-Heroult Process are of two basic types: prebaked and Soderberg anodes.

Fabrication of prebaked and Soderberg anodes is performed in the anode paste plant where coal tar pitch and ground petroleum coke are blended together to form a paste. Prebaked anodes, as the name suggests, are baked prior to their use in the electrolytic cell. Iron rods are then attached to the anode so that it may be suspended above the electrolytic cell. Above the electrolytic cell, the anodes are assembled in two basic patterns. In the side worked prebaked cell, the anodes are assembled in two rows extending the length of the cell with the rows closely spaced in the center of the cell. This arrangement provides a working area on each side of the cell between the cell side lining and the anodes where aluminum is added to the cell (thus the name side worked prebake cell). In the center worked prebake cell, anodes are placed in two rows and placed closer to the cell side lining, providing the working area in the center of the cell between the rows (thus the name center worked prebake cell). In 1984, prebaked anodes were used in 20 of 31 primary aluminum plants.

The alternative to the prebaked anode is the Soderberg anode. In the Soderberg process, the anode paste is used in the electrolytic cell without prior processing. The paste is periodically fed into a rectangular steel compartment above the pot. The heat of the chemical reaction in the pot then bakes the paste, fusing the new material with the old anode. The tip of this anode projects through the steel shell into the electrolyte. As the tip is oxidized, constant replacement of the anode is possible. Two configurations exist in the aluminum industry using the Soderberg process: (1) the Horizontal Stud Soderberg (HSS) process and (2) the Vertical Stud Soderberg (VSS) process. The HSS system uses horizontal studs or pins to support the anode body, while the VSS system uses vertical pins. In the horizontal Soderberg process, the holding pins are adjusted from the side of the pot, while in the vertical Soderberg process the pins are adjusted from the top. Since the paste is added from above, complete hooding of the VSS cell is not possible, and more fumes

may be emitted to the potroom than with the use of prebaked anode cells. The VSS and HSS cell configurations were originally thought to have a great advantage since they eliminated the need for a separate paste plant. The presence of carbon which has not been solidified, however, has become a problem. The unbaked carbon paste which is added to the anode gives off volatile organic compounds (VOC). These VOC emissions may condense in the ductwork or in the air pollution control equipment and cause fouling. In addition, VOC and fluoride emissions must be controlled simultaneously.

The prebaked anode is more expensive to manufacture because of the bake plant requirement; however, it is the most electrically efficient of the three anode types. The distribution of plants in 1984 with VSS, HSS, and prebaked anodes is listed below:

Anode Type	Number of Plants
Prebaked	20
VSS	4
HSS	7

It is essential for purity of the product aluminum and the structural integrity of the cell that the molten aluminum be isolated from the iron shell. If the pot was left unlined, the iron would react with the electrolytic bath, and an iron-aluminum alloy would be the result of the electrolysis. Therefore, a carbon liner is used. A service life of up to three years may be attained for a properly installed liner in a well-managed cell, but an average life of between two and three years is reported to be more common.

Upon failure of a liner, the cell is emptied, cooled, and removed from the cell room to a working area. By mechanical drilling and soaking in water, the shell is stripped of old lining material, which may be processed through a cathode reprocessing facility for recovery of fluoride values or simply set aside in a storage yard.

Potline cells emit gases containing particulates, fluoride compounds, SO_x, CO_x, tars, and oils. Emissions can be collected by using hoods above the cells and treated by wet or dry processes. Activated alumina adsorption is the most common dry process; however, electrostatic precipitators are also used. Two types of alumina are used in the electrolytic cell: floury and sandy alumina. Sandy alumina is often used for air scrubbing prior to its use as a raw material, while floury alumina is generally not used as a scrubbing material because it lacks the physical characteristics that make a good scrubbing material. The alumina adsorption method allows for recycle of the fluoride back to the cell. At the time of the 1974 rulemaking, wet pot line air scrubbing was the largest single contributor of pollutants (fluoride and TSS) to the plant's wastewater. At that time, about 88 percent of the aluminum plants used wet scrubbing. In

contrast, only 35 percent of the plants are now using primary or secondary wet scrubbing.

In many facilities (Vertical Stud Soderberg cells and side worked prebaked cells), potline hooding does not provide adequate control of emission from potline cells, and pollutants are released into the potroom. In the VSS configuration of the Soderberg process, paste addition and pin adjustment occur above the cell and complete hooding is not possible. As a result, facilities with the VSS configuration typically use potroom scrubbing to control the release of pollutants from the cell. Potroom air pollution control devices available are limited, by cost, to wet scrubbers. The applicable dry systems, fluidized bed alumina and injected alumina, have not been cost effective because of the large volumes of air which must be treated. All eight plants with secondary or potroom emission control in EPA's data base use wet systems.

It is reported lithium carbonate may be added to the electrolytic cells to reduce power consumptions and increase production. By adding lithium to the electrolytic cell, physical properties of the batch such as melting point, electrical conductivity, and the density of the electrolyte are controlled. An added benefit, and more relevant to this document, is that lithium reduces fluoride emissions.

Dry potline scrubbing is reported to be detrimental to the manufacture of certain high purity alloys. Normally 100 percent of the potline feed has been used as scrubbing material; however, using aluminum in this manner tends to concentrate impurities such as iron and silicon in the electrolytic cell. This precludes use of recycled alumina as a raw material to produce these alloys. It is possible, however, to manufacture high purity alloys in cells using dry scrubbers if only a relatively small percentage (not greater than approximately 20 percent) of the production capacity is dedicated to the manufacture of these alloys. Fresh alumina is used to manufacture the alloys and the alumina used for scrubbing is used as feed in other cells.

Wet scrubbers are also used to control sulfur emissions from the potline. These scrubbers differ from those wet systems used to control fluoride in that an alkali solution (normally sodium) is used for scrubbing. Use of alkali scrubbers follows dry scrubbing systems where particulate, fluoride, and organic air pollutants are removed. In 1984, there were two known U.S. plants operating sodium scrubbers on potline emissions to control sulfur oxides.

Aluminum Fluxing and Degassing

The molten aluminum collected in the bottom of the electrolytic pots is tapped and conveyed to holding furnaces for subsequent refining and alloying. Refining consists of fluxing to remove impurities and degassing to reduce entrapped hydrogen gas in the molten aluminum. Oftentimes fluxing and degassing are performed

in the holding furnace prior to casting. Degassing is performed by injecting chlorine, nitrogen, argon, helium and mixtures of chlorine and inert gases into the molten aluminum. Hydrogen desorbs into the chlorine bubble due to the partial pressure difference between the elements. The addition of a gas to the melt also mixes the aluminum to assure that all materials added concurrently for alloying are distributed evenly in the molten aluminum.

Besides hydrogen, other impurities that affect product quality are oxides of aluminum and magnesium, and trace elements such as sodium, calcium, and lithium. Chlorine gas reacts with the trace elements to form insoluble salt particles. These salt particles and the metal oxide impurities rise to the surface of the molten bath through specific gravity differences and flotation, respectively. The impurities collected at the surface of the molten metal, commonly referred to as dross, are skimmed and removed from the furnace.

Solid fluxes, such as hexachloroethane, aluminum chloride, and anhydrous magnesium chloride, may be used instead of gaseous fluxing. These fluxes are added to the surface of the molten metal and stirred in to obtain proper distribution and contact. It is reported, however, solid fluxes are difficult to use and generally less efficient than gaseous fluxes. Only one primary aluminum facility reported using solid fluxes.

Two inherent problems with furnace fluxing and degassing are corrosion and air pollution. Emissions from the furnace consist of unreacted chlorine and aluminum chloride gas. Aluminum chloride hydrolyzes in the stack and atmosphere to form acid mist and aluminum oxide fumes. Fumes released by furnace degassing and fluxing are treated by wet scrubbers at three plants.

There are two refining procedures currently available which, by the nature of their operation, reduce chlorine fumes from refining operations and thus the need for air pollution control devices. Chlorine fumes are reduced through the use of alternate in-line fluxing and filtering techniques and with the MRL-P28 process by containing the chlorine under a layer of molten salt and the subsequent formation of magnesium chloride.

Alternate in-line fluxing and filtering is performed outside of the holding furnace just prior to casting. There are three basic in-line fluxing and filtering techniques: 1) flotation, 2) impingement, and 3) counter flow impingement. Flotation in-line fluxing is very similar to furnace degassing and fluxing methods. A mixture of gases, including chlorine, is bubbled countercurrently through the molten metal to remove impurities. Gas is distributed to the molten metal with a rotating vane, yielding better bubble distribution, and therefore better removal efficiency and lower chlorine demands because a stoichiometric amount of gas can be used. In this way, subsequent fuming is reduced because less chlorine is required.

The second in-line fluxing technique listed, impingement, is actually a filtering technique. A ceramic or fiberglass media is used to filter the molten aluminum just prior to casting. In-line filters are reported to remove metal oxides so that only enough chlorine need be added to remove hydrogen and trace metals. Once again, fuming problems are reduced because less chlorine is required. Oftentimes this technology is used in conjunction with furnace fluxing. Counter flow impingement in-line fluxing is a combination of the first two methods. Gas is distributed to the molten aluminum through the filter media and then allowed to bubble up through the molten aluminum.

In the MRL-P28 method of degassing, 97 percent nitrogen and three percent Freon 12 is used. A molten salt cover, consisting of sodium chloride and potassium chloride or magnesium chloride and potassium chloride is used to supress fuming. It is reported this technology is technically equivalent to chlorine fluxing and reduces stack emissions by a factor of 20 when compared to chlorine.

Casting

Casting is the final step at most aluminum reduction plants. Pig and sow casting, direct chill casting, continuous rod casting, and shot casting are the most common methods of casting used in the primary aluminum subcategory.

Vertical direct chill casting is characterized by continuous solidification of the metal while it is being poured. The length of an ingot or billet cast using this method is determined by the vertical distance it is allowed to drop rather than by mold dimensions. Molten aluminum is tapped from the smelting furnace and flows through a distributor channel into a shallow mold. Noncontact cooling water circulates within this mold, causing solidification of the aluminum. The base of the mold is attached to a hydraulic cylinder which is gradually lowered as pouring continues. As the solidified aluminum leaves the mold, it is sprayed with contact cooling water to reduce the temperature of the forming ingot or billet. The cylinder continues to descend into a tank of water, causing further cooling of aluminum as it is immersed. When the cylinder has reached its lowest position, pouring stops and the ingot is lifted from the pit. The hydraulic cylinder is then raised and positioned for another casting cycle.

Horizontal direct chill casting is performed in much the same way as vertical direct chill casting. The primary difference is that the cast aluminum is conveyed from the mold in the horizontal direction rather than vertically. Twenty-six primary aluminum plants reported using direct chill casting.

In continuous rod casting, a ring mold is fitted into the edge of a rotating casting wheel. Molten aluminum is then poured into the mold and cools as the mold assembly rotates. After the wheel has rotated about 160 degrees, the pliable aluminum bar is

released. Immediately following release from casting the rod is transported on conveyers to a rolling mill where the diameter of the rod is reduced. Thus it can be seen continuous rod casting is generally associated with aluminum forming. Three primary aluminum plants reported using continuous rod casting to cast molten aluminum extracted from the pots.

Stationary casting is used to cast pigs and sows. In this method of casting, the molds are stationary and the contact cooling water generally evaporates if it is used. Eight plants with stationary casting were identified.

One plant reported pebble casting which appears to be similar to shot casting. Generally, aluminum shot is used as a deoxidant in the steel industry. Molten metal is poured into a vibrating feeder, where droplets of molten metal are formed through perforated openings. The droplets are cooled in a quench tank. Water is generally recycled, and periodic sludge removal is required.

Anode Paste Plant

Fabrication of prebaked and Soderberg anodes takes place in the anode paste plant where coal tar pitch and ground petroleum coke are blended together to form paste. During electrolysis, the prebaked anode is gradually consumed and becomes too short to be effective. The resulting anode "butts," as they are commonly referred to, are recycled for use in the paste plant. Operations included in the paste plant are crushing, screening, calcining, grinding, and mixing. The paste is then formed into briquettes (for use in Soderberg cells) or into green prebake anodes. At this stage, briquettes and green anodes are essentially the same, where the principal difference between the two is size. Briquettes are formed through an extrusion process in which the paste is forced through a die and then chopped into small pieces (briquettes) using a dicer. Green anodes, which are much larger than briquettes, are formed by pressing paste into a mold. Vibration may also be used. After forming, cooling water is used to quench the briquettes or anodes to facilitate handling. There are eleven plants that report using anode or briquette cooling water.

Paste plant air pollution control usually consists of dry removal of dust, although four plants use wet scrubbers. There are eight plants using dry air pollution control devices; however, only one of these is used to control emissions from the paste blending area. Emissions from the paste blending area contain high loadings of organics and are normally controlled with wet scrubbers.

Carbon liners for the cell bottom are normally manufactured off-site. However, the carbon liner is sealed into the cell by ramming paste into the cracks and seams of the liner. Two plants reported using wet scrubbers to control emissions during the blending of cathode paste.

Anode Bake Plant

Anodes used in prebake potline cells are baked prior to their use in the potline. Two basic furnaces are used to bake anodes: ring furnaces and tunnel kilns. The ring furnace consists of compartmentalized, sunken, brick baking pits with surrounding interconnecting flues. Green anodes are packed into the pits, with a blanket of coke or anthracite filling the space between the anode blocks and the walls of the pits. A 10 to 12 inch blanket of calcined petroleum coke fills the top of each pit above the top layer of anodes. The blanket helps to prevent oxidation of the carbon anodes.

Each pit is baked for a period of about 40 to 48 hours. The flue system of the furnace is arranged so that hot gas from the pits being baked is drawn through the next section of pits to gradually preheat the next batch of anodes before they are baked. Air for combustion is drawn through the sections previously baked, cooling them down. The anodes are baked at approximately 1,200°C, and the cycle of placing green anodes, preheating, baking, cooling, and removal is approximately 28 days. Roughly 40 percent of the anode is volatilized during the baking cycle.

Baking of sections proceeds down one side of the rectangular furnace building and back up the other in a "ring" pattern. Proceeding around the building, the pattern of sections cooling down, sections being baked, sections heating up, and empty sections is repeated several times.

Ring furnaces use outside flues under draft, and since the flue walls are of dry-type construction, most volatile materials released from the anodes during the baking cycle (principally hydrocarbons from the pitch binder) are drawn, with the combustion products of the firing, into the flue gases where they are burned at about 1300°C.

Gaseous emissions are composed primarily of fluoride (present due to the recycle of anode butts) and hydrocarbons which are controlled through either wet scrubbers or dry scrubbers using alumina. Five plants reported using wet scrubbers to control air pollution, while 12 plants utilize dry systems.

The baked anodes are stripped from the furnace pits by means of an overhead crane on which pneumatic systems for loading and removing the coke pit packing may also be mounted. The packing may subsequently become part of other green anodes in the carbon plant.

Ring furnaces can be further subdivided into open and closed top furnaces. A closed top furnace is covered with a movable refractory arch lid. An open top furnace is characterized by the absence of the refractory lid. Removal of the lid from a closed top furnace interrupts the flow path, drawing the volatiles up through the packing material and directly into the flue. This

method of operation increases flue life and decreases fuel consumption because less air is required. It is reported that about one-third less gases are processed in the closed top furnace.

A second type of furnace, the tunnel kiln, has been developed for baking anodes. The kiln is an indirect-fired chamber in which a controlled atmosphere is maintained to prevent oxidation of the carbon anodes. Green anode blocks are loaded on transporter units that enter the kiln through an air lock, pass successively through a preheating zone, a baking zone, and a cooling zone, and leave the kiln through a second air lock. The refractory beds of the cars are sealed mechanically to the kiln walls to form the muffle chamber, and yet permit movement of the units through the kiln.

The muffle chamber is externally heated by combustion gases and the products of combustion are discharged through an independent stack system. Effluent gases from the baking anodes may be introduced into the fire box so as to recover the fuel value of hydrocarbons and reduce the quantity of unburned hydrocarbon to approximately 1 percent of that coming from a ring furnace.

Although the tunnel kiln presents mechanical problems in design and operation, it is reported to have several appreciable advantages over the ring type of furnace:

1. Baking cycle from green to finished anode is much shorter.
2. Anode baking is more uniform.
3. Space requirements for equal capacity furnaces are less.
4. Smaller gas volumes are handled through the furnace emission control system.

The tunnel kiln in this application is used at only one primary aluminum plant.

Baked anodes are delivered to air blast cleaning machines utilizing fine coke as blasting grit. Fins, scrafs, and adherent packing is removed by this treatment, and the baked anodes are then transferred to the rod shop where the electrodes are attached.

Cathode Reprocessing

A detailed description of cathode reprocessing will not be presented due to confidentiality constraints. However, a brief process description is possible and is sufficient for purposes of understanding the regulations that apply to this unit process.

Spent potliners (cathodes) from the electrolytic cells are disposed of through landfilling, indefinite "storage," or cathode reprocessing. Cathode reprocessing serves a hazardous waste treatment function by reducing waste volume, and incidentally recovering cryolite. In cathode reprocessing, the spent

potliners are ground in a ball mill and then leached with caustic to solubilize fluoride. Undigested cathode material is separated from the leachate using sedimentation and then sent to lagoons. Sodium aluminate ($NaAlO_2$) is then added to the leachate to initiate the precipitation of cryolite (Na_3AlF_6) and a second solid-liquid separation is performed to recover cryolite, which can be reused in the electrolytic cell. Lime is added to the supernatant to precipitate calcium fluoride and a third solid-liquid separation is performed. The resulting supernatant is then routed back to the front of the process and used for leaching. Blowdown from the system varies from plant to plant, but it is universally used as potline scrubber liquor make-up when wet potline scrubbers are used. It is also common to route potline scrubber liquor through the cathode reprocessing circuit. In this way, fluoride concentrations of the scrubber liquor are controlled and recycle is possible.

PROCESS WASTEWATER SOURCES

The principal wastewater sources in the primary aluminum subcategory are:

1. Anode and cathode paste plant wet air pollution control,
2. Anode bake plant wet air pollution control,
4. Cathode reprocessing,
5. Anode and briquette contact cooling,
6. Potline wet air pollution control,
7. Potline SO_2 wet air pollution control,
8. Potroom wet air pollution control,
8. Degassing wet air pollution control,
9. Pot repair and pot soaking,
10. Direct chill casting contact cooling,
11. Continuous rod casting contact cooling, and
12. Stationary and shot casting contact cooling.

OTHER WASTEWATER SOURCES

Other wastewater streams may be associated with the manufacture of primary aluminum, or found at primary aluminum facilities. These wastewater streams may include coke plant contact cooling water, courtyard and rooftop spray water, paste bucket wash water, maintenance and cleanup water, stormwater runoff, and spent potliner leachate. With the exception of spent potliner leachate, these waste streams are not considered as a part of this rulemaking. EPA believes that the flows and pollutant loadings associated with these waste streams are either "too insignificant to warrant a discharge allowance" or are best handled by the appropriate permit authority on a case-by-case basis under authority of Section 402 of the Clean Water Act.

While EPA believes that spent potliner leachate is best handled by the appropriate permit authority on a case-by-case basis, EPA has provided guidance to permit writers on the issue of leachate treatment performance values (See Section X of this document and

52 FR 25554). That guidance states that spent potliner leachate may receive the treatment performance values developed for cathode reprocessing or potline scrubber liquor commingled with cathode reprocessing wastewaters provided that the permit writer determines, on a case-by-case basis, that the wastewater matrices of cathode reprocessing and spent potliner leachate are comparable. Also, the spent potliner leachate may not be commingled with process or nonprocess wastewaters other than cathode reprocessing or potline wet air pollution control operated in conjunction with cathode reprocessing. Spent potliner leachate resulting from atmospheric precipitation is considered to be a site-specific, non-scope waste stream by the Agency. As such, specific limitations are not provided for this waste stream in 40 CFR Part 421, §§421.23, 421.24, and 421.26.

AGE, PRODUCTION, AND PROCESS PROFILE

Figure III-2 (page 642) shows the location of the 31 primary aluminum reduction plants operating in the United States. Because considerable amounts of electrical energy are required to produce aluminum, most primary aluminum plants are located near sources of abundant and inexpensive hydroelectric power, such as the Pacific Northwest and the Tennessee River Valley.

Of the 31 reduction plants listed in Table III-1, (page 638) 22 plants (70 percent) were built in the last 33 years. The average plant age is between 20 and 30 years. The data summarized in Table III-2 (page 639) indicate that 27 of the 31 plants (85 percent) produce less than 200,000 tons per year each. Median production is in the 100,000 to 150,000 tons per year range.

Table III-3 (page 640) provides a summary of the number of plants generating wastewater for the waste streams associated with the various processes and the number of plants with the process.

Table III-1

INITIAL OPERATING YEARS (RANGE) SUMMARY OF PLANTS
IN THE PRIMARY ALUMINUM SUBCATEGORY BY DISCHARGE TYPE

Type of Plant Discharge	Plant Age Range (Years)								Total
	1982-1973 0-10	1972-1968 10-15	1967-1958 15-25	1957-1948 25-35	1947-1938 35-45	1937-1918 45-65	1917-1903 65-80	Before 1903 80+	
Direct	1	6	4	7	8	0	1	0	27
Zero	1	0	0	3	0	0	0	0	4
Total	2	6	4	10	8	0	1	0	31

Table III-2

PRODUCTION RANGES FOR THE PRIMARY ALUMINUM SUBCATEGORY

Production Ranges for 1976 (tons/year)	No. of Plants
0 - 50000	2
50001 - 100000	9
100001 - 150000	9
150001 - 200000	7
200001 - +	3
Not Reported	1
Total Number of Plants in Survey	31

Table III-3

SUMMARY OF SUBCATEGORY PROCESSES AND ASSOCIATED WASTE STREAMS

Process	Number of Plants with Process	Number of Plants Generating Wastewater
Electrolytic Reduction	31	
Potline Air Pollution Control	28	9
Potline SO_2 Air Pollution Control	2	2
Potroom Air Pollution Control	8	8
Anode Paste Plant	29	
Anode Paste Plant Air Pollution Control	26	4
Anode Bake Plant	20	
Anode Bake Plant Wet Air Pollution Control	17	5
Anode Contract Cooling and Briquette Quenching	11	11
Cathode Reprocessing	4	4
Pot Repair and Pot Soaking	31	5*
Refining	13	
Degassing Air Pollution Control	6	4
Casting		
Direct Chill Casting	26	26
Continuous Rod Casting	3	3
Stationary Casting	8	0
Shot Casting	1	1

* Number of Plants known to discharge pot soaking and pot repair wastewater.

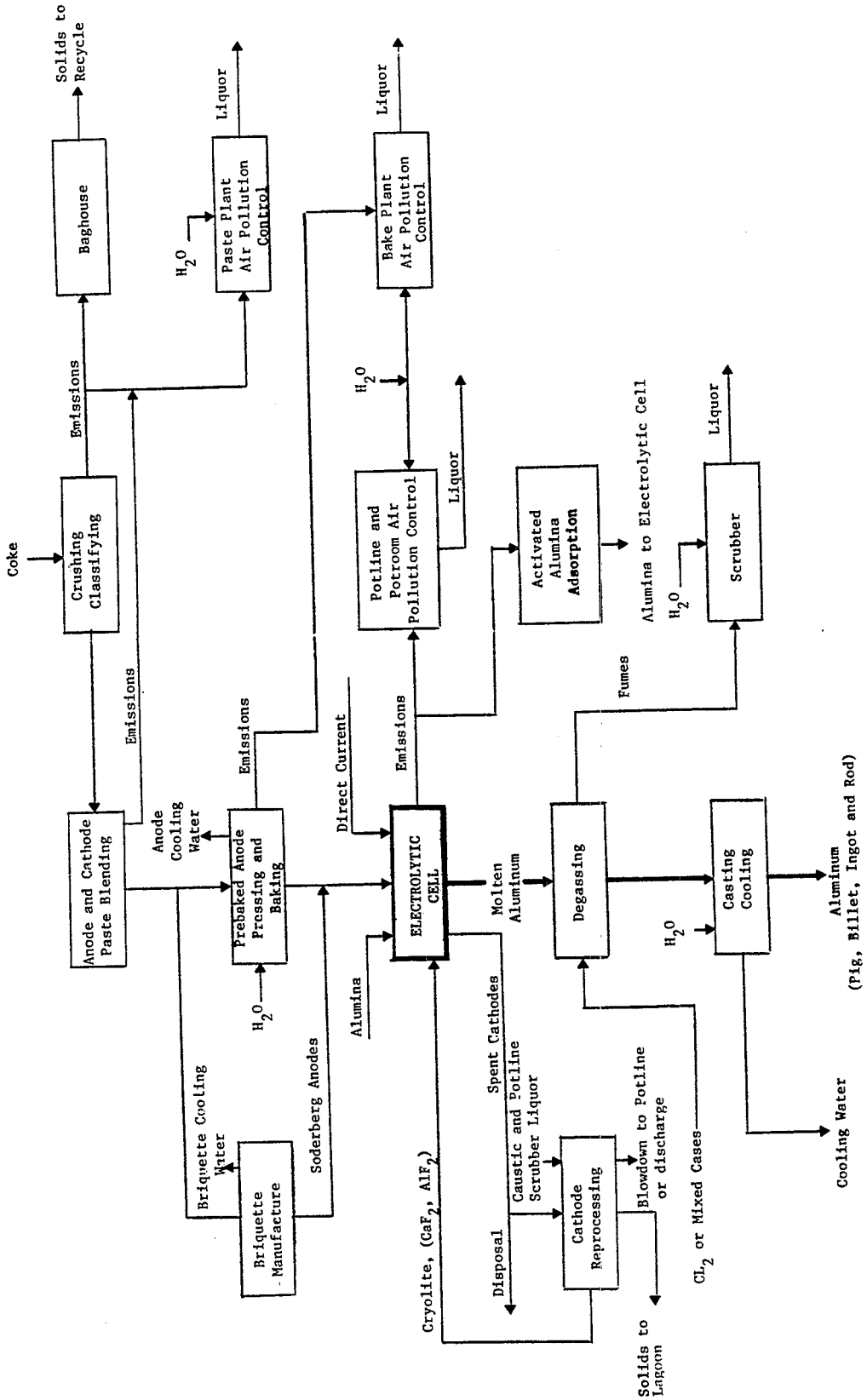

Figure III-1

PRIMARY ALUMINUM REDUCTION PROCESS

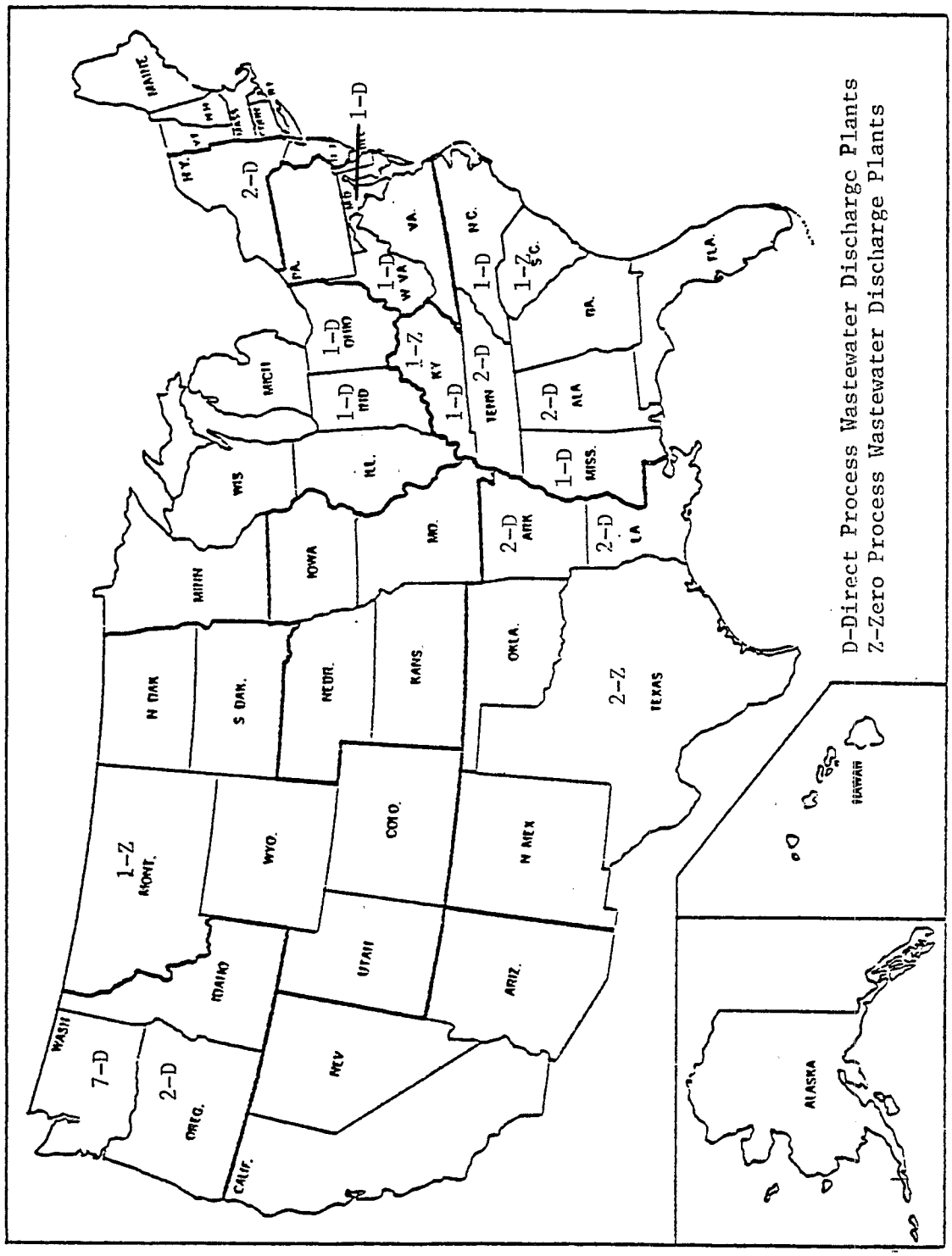

Figure III-2

GEOGRAPHIC LOCATIONS OF PRIMARY ALUMINUM REDUCTION PLANTS

SECTION IV

SUBCATEGORIZATION

This section summarizes the factors considered during the designation of the primary aluminum subcategory and its related subdivisions. Primary aluminum was considered as a single subcategory during the previous 1974 rulemaking.

FACTORS CONSIDERED IN SUBDIVIDING THE PRIMARY ALUMINUM SUBCATEGORY

The factors listed for general subcategorization were each evaluated when considering subdivision of the primary aluminum subcategory. In the discussion that follows, the factors will be described as they pertain to this particular subcategory.

The rationale for considering segmentation of the primary aluminum subcategory is based primarily on the production process used. Within this subcategory, a number of different operations are performed, which may or may not have a water use or discharge, and which may require the establishment of separate effluent limitations and standards. While primary aluminum smelting is still considered a single subcategory, a more thorough examination of the production processes, water use and discharge practices, and pollutant generation rates has illustrated the need for limitations and standards based on a specific set of waste streams. Limitations and standards will be based on specific flow allowances for the following subdivisions:

1. Anode and cathode paste plant wet air pollution control,
2. Anode bake plant wet air pollution control,
3. Cathode reprocessing,
4. Anode and briquette contact cooling,
5. Potline wet air pollution control,
6. Potline SO_2 wet air pollution control,
7. Potroom wet air pollution control,
8. Degassing wet air pollution control,
9. Pot repair and pot soaking,
10. Direct chill casting contact cooling,
11. Continuous rod casting contact cooling, and
12. Stationary and shot casting contact cooling.

OTHER FACTORS

A number of other factors considered in this evaluation and were shown to be an inappropriate bases for further segmentation. These are discussed briefly below.

Type of Anode

As described in Section III, there are two anode types used by

the primary aluminum subcategory; prebaked and Soderberg. The type of anode used determines the wastewater source in which particular toxic organic pollutants appear. In plants using prebaked anodes, toxic organic pollutants have been observed in wastewater from wet air pollution control devices associated with the anode bake plant and in plants using Soderberg anodes, toxic organics have been observed in potline and potroom wet air pollution control devices. However, the concentrations of the toxic organics observed in both wastewater sources were at similar levels, requiring similar treatment (refer to Sections V and VII). Accordingly, subdivision of the category by anode type was rejected.

Plant Size

A review of the 31 aluminum reduction plants showed that 11 plants have capacities of less than 90,000 metric tons (100,000 short tons) per year, 16 plants have capacities between 90,000 and 180,000 metric tons (100,000 and 200,000 short tons per year), and three plants have capacities greater than 180,000 metric tons (200,000 short tons) per year. No factors relating to this distribution of plant size and pertaining to a given plant's ability to achieve effluent limitations have been identified.

Plant Age

Primary aluminum smelting is a relatively new industry based on a single process. Therefore, the oldest plants built in the early 1940's are electrochemically equivalent to those built today; however, numerous modifications have been made in process operation which have resulted in greater production efficiency and reduced air pollutant emissions. As a result, neither the concentration of constituents in wastewater nor the capability to meet the limitations is related to plant age. Because of the general uniformity of aluminum process technology, the application of most environmental control methods and systems that have been developed is dependent on factors other than age (i.e., for the Hall process, the most recently developed unit operations are used, and these can be retrofitted independently of plant age).

Product

Primary aluminum smelters produce aluminum metal and various aluminum alloys. Some plants carry out an additional refining step to produce higher purity aluminum, and a few plants also carry out rolling and wire-drawing operations. The fabrication operations rolling, drawing, forging, and extrusion are covered under a separate point source category.

PRODUCTION NORMALIZING PARAMETERS

As discussed previously, the effluent limitations and standards developed in this document establish mass limitations on the

discharge of specific pollutant parameters. To allow these limitations and guidelines to be applied to plants with various production capacities, the mass of pollutant discharged must be related to a unit of production. This factor is known as the production normalizing parameter (PNP). In general, the amount of aluminum produced by the respective manufacturing process is used as the PNP. This is based on the principle that the amount of water generated is proportional to the amount of product made. The PNP's for the 12 subdivisions are displayed in Table VI-1 (page 659). Other PNPs were considered for certain subdivisions; however, they were rejected. They are discussed below.

ANODE AND CATHODE PASTE PLANT WET AIR POLLUTION CONTROL

The production normalizing parameter selected for this segment is the actual paste production, as metric tons (short tons) of paste. Overall aluminum reduction capacity, although considered as a parameter, was rejected; since some plants sell paste and anodes to other plants, it is difficult to ascertain which plants were selling and which plants were purchasing. Records are available, however, that detail paste plant capacity and production levels. Capacity, rather than actual paste production, was considered for use because the water use and discharge rates reported by the plants were for a year when capacity utilization in the primary aluminum subcategory was abnormally low. When analytical samples were taken, however, the pollutant concentration calculations were based on actual measured flows and production rates. In order to be consistent when determining pollutant loadings, the actual paste production was chosen as the production normalizing parameter. Use of actual paste production also eliminates the need for plants to reduce water flow during years in which actual production is greater than design capacity.

CATHODE REPROCESSING

The production normalizing parameter proposed for this subdivision was the amount of aluminum produced from electrolytic reduction. The Agency has learned since proposal that certain primary aluminum plants may process cathodes from other plants as a hazardous waste treatment operation. Consequently, the aluminum produced from electrolytic reduction is an inappropriate production normalizing parameter. A more suitable production normalizing parameter is the amount of cryolite recovered during cathode reprocessing. In this way, cathode reprocessing becomes independent of the reduction process so that cathodes from other plants may be brought to one site for processing.

POTLINE, POTLINE SO_2, AND POTROOM WET AIR POLLUTION CONTROL

Most plants use wet or dry scrubbing over an entire potline or potroom (i.e., the off-gases are collected, and centralized scrubbers are used to control the emissions). Occasionally, though, a plant may use wet scrubbers on only one of their potlines. Therefore, the production normalizing parameter

selected for these subdivisions is the amount of aluminum produced from electrolytic reduction. If wet scrubbers are only used on a particular potline, the amount of aluminum produced is based on the electrolytic reduction in that potline. Although it should be noted that actual aluminum production from electrolytic reduction can exceed rated capacity, this is generally achievable only with a loss in current efficiency. Discussions with plant personnel indicated that capacity might be a more appropriate measure than actual aluminum production from electrolytic reduction because when the potline is operating, water use is relatively constant (i.e., water use is not adjusted for production rates). When an entire potline is shut down, then the scrubbers are shut down as well. Consistency in the application of sampling data, however, necessitated the use of aluminum production from electrolytic reduction as the production normalizing parameter. This will ensure that higher capacity utilization will not reduce the production normalized flow allowance for this operation.

TABLE IV-1

PRODUCTION NORMALIZING PARAMETERS

	Subdivision	PNP
1.	Anode and cathode paste plant wet air pollution control	kkg of paste produced
2.	Anode bake plant wet air pollution control	kkg of anodes baked
3.	Anode and briquette contact cooling	kkg of anodes or briquettes cast
4.	Cathode reprocessing	kkg of cryolite produced from cathode reprocessing
5.	Potline wet air pollution control	kkg of aluminum produced from electrolytic reduction
6.	Potline SO_2 wet air pollution control	kkg of aluminum produced from electrolytic reduction
7.	Potroom wet air pollution control	kkg of aluminum produced from electrolytic reduction
8.	Degassing wet air pollution control	kkg of aluminum degassed
9.	Pot repair and pot soaking	kkg of aluminum produced from electrolytic reduction
10.	Direct chill casting contact cooling	kkg of aluminum product from direct chill casting
11.	Continuous rod casting contact cooling	kkg of aluminum product from rod casting
12.	Stationary or shot casting contact cooling	kkg of aluminum product from stationary or shot casting

THIS PAGE INTENTIONALLY LEFT BLANK

SECTION V

WATER USE AND WASTEWATER CHARACTERISTICS

This section describes the characteristics of wastewater associated with the primary aluminum subcategory. Data used to quantify wastewater flow and pollutant concentrations are presented, summarized, and discussed. The contribution of specific production processes to the overall wastewater discharge from primary aluminum plants is identified whenever possible. This information was used primarily to identify principal sources of wastewater in the category and to determine if pollutants were present in treatable concentrations. Treatment performance concentrations were developed from different data bases.

Three principal data sources were used in the development of the effluent limitations and standards for this subcategory: data collection portfolios (dcp), field sampling results and comments and associated specific data requests. Data collection portfolios, completed for each of the primary aluminum plants, contain information regarding wastewater flows and production levels.

In order to quantify the pollutant discharge from primary aluminum plants, a field sampling program was conducted. Wastewater samples were collected in two phases: screening and verification. The first phase, screen sampling, was to identify which toxic pollutants were present in the wastewaters from production of the various metals. Screening samples were analyzed for 125 of the 126 toxic pollutants and other pollutants deemed appropriate. Because the analytical standard for TCDD was judged to be too hazardous to be made generally available, samples were never analyzed for this pollutant. There is no reason to expect that TCDD would be present in aluminum smelting wastewater. A total of 10 plants were selected for screen sampling in the nonferrous metals manufacturing category. A complete list of the pollutants considered and a summary of the techniques used in sampling and laboratory analyses are included in Section V of the General Development Document. In general, the samples were analyzed for three classes of pollutants: toxic organic pollutants, toxic metal pollutants, and criteria pollutants (which includes both conventional and nonconventional pollutants).

As described in Section IV of this supplement, the primary aluminum subcategory has been further segmented into 12 building blocks, so that the promulgated regulation contains mass discharge limitations and standards for 12 process wastewaters. Differences in the wastewater characteristics associated with these building blocks are to be expected. For this reason, wastewater streams corresponding to each segment are addressed separately in the discussions that follow.

WASTEWATER SOURCES, DISCHARGE RATES, AND CHARACTERISTICS

The wastewater data presented in this section were evaluated in light of production process information compiled during this study. As a result, it was possible to identify the principal wastewater sources in the primary aluminum subcategory. These include:

1. Anode and cathode paste plant wet air pollution control,
2. Anode bake plant wet air pollution control,
3. Anode and briquette contact cooling,
4. Cathode reprocessing,
5. Potline wet air pollution control,
6. Potline SO_2 wet air pollution control,
7. Potroom wet air pollution control,
8. Refining and degassing wet air pollution control,
9. Pot repair and pot soaking,
10. Direct chill casting contact cooling water,
11. Continuous rod casting contact cooling water, and
12. Stationary and shot casting contact cooling water.

Data supplied by dcp responses (and special requests) were evaluated, and two flow-to-production ratios were calculated for each stream. The two ratios, water use and wastewater discharge flow, are differentiated by the flow value used in calculation. Water use is defined as the volume of water or other fluid (e.g., emulsions, lubricants) required for a given process per mass of aluminum product and is therefore based on the sum of recycle and make-up flows to a given process. Wastewater flow discharged after pretreatment or recycle (if these are present) is used in calculating the production normalized flow--the volume of wastewater discharged from a given process to further treatment, disposal, or discharge per mass of aluminum produced. Differences between the water use and wastewater flows associated with a given stream result from recycle, evaporation, and carryover on the product. The production values used in calculation correspond to the production normalizing parameter, PNP, assigned to each stream, as outlined in Section IV. The production normalized flows were compiled and statistically analyzed by stream type. Where appropriate, an attempt was made to identify factors that could account for variations in water use. This information is summarized in this section. A similar analysis of factors affecting the wastewater values is presented in Sections X, XI, and XII where representative BAT, BDT, and pretreatment discharge flows are selected for use in calculating the effluent limitations and standards. As an example, potline air scrubbing waste water flow is related to the potline production. As such, the discharge rate is expressed in liters of scrubber wastewater per metric ton of potline production (gallons of scrubber water per ton of potline production).

The methods used in evaluation of wastewater data varied as dictated by the intended use of the results. For example, in Section VI the wastewater data from effluent samples are examined

to select pollutants for consideration in regulating the category.

In order to quantify the concentrations of pollutants present in wastewater from primary aluminum plants, wastewater samples were collected at six plants, representing 22 percent of the discharging primary aluminum plants. Diagrams indicating the sampling sites and contributing production processes are shown in Figures V-1 to V-6 (pages 718 to 723).

The raw wastewater sampling data for the primary aluminum subcategory are presented in Tables V-2, 4, 6, 8, 10, 13, 15, and 20 (pages 660, 663, 666, 669, 675, 679, 687, 693, respectively). Miscellaneous wastewater sampling data are presented in Table V-21 (page 695). Treated wastewater sampling data are shown in Tables V-22 through V-27 (pages 701 to 710). The stream codes displayed in Tables V-12 through V-27 (pages 680 to 710) may be used to identify the location of each of the samples on the process flow diagrams in Figures V-1 to V-6 (pages 718 to 723). Where no data are listed for a specific day of sampling, the wastewater samples for the stream were not collected. If the analysis did not detect a pollutant in a waste stream, the pollutant was omitted from the table.

The data tables include some samples measured at concentrations considered not quantifiable. The base-neutral extractable, acid extractable, and volatile organics are generally considered not quantifiable at concentrations equal to or less than 0.010 mg/l. Below this concentration, organic analytical results are not quantitatively accurate; however, the analyses are useful to indicate the presence of a particular pollutant. The pesticide fraction is considered nonquantifiable at concentrations equal to or less than 0.005 mg/l. Nonquantifiable results are designated in the tables with an asterisk (double asterisk for pesticides).

These detection limits shown on the data tables are not the same in all cases as the published detection limits for these pollutants by the same analytical methods. The detection limits used were reported with the analytical data and hence are the appropriate limits to apply to the data. Detection limit variation can occur as a result of a number of laboratory-specific, equipment-specific, and daily operator-specific factors. These factors can include day-to-day differences in machine calibration, variation in stock solutions, and variation in operators.

The statistical analysis of data includes some samples measured at concentrations considered not quantifiable. Data reported as an asterisk are considered as detected but below quantifiable concentrations, and a value of zero is used for averaging. Toxic organic, nonconventional, and conventional data reported with a "less than" sign are considered as detected, but not further quantifiable. A value of zero is also used for averaging. If a pollutant is reported as not detected, it is excluded in calculating the average. Finally, toxic metal values reported as

less than a certain value were considered as not detected, and a value of zero is used in the calculation of the average. For example, three samples reported as ND, *, and 0.021 mg/l have an average value of 0.010 mg/l. The averages calculated are presented with the sampling data. These values were not used in the selection of pollutant parameters.

The method by which each sample was collected is indicated by number, as follows.

1 one-time grab
2 24-hour manual composite
3 24-hour automatic composite
4 48-hour manual composite
5 48-hour automatic composite
6 72-hour manual composite
7 72-hour automatic composite

In the dcps, plants were asked to indicate whether or not any of the toxic pollutants were believed to be present in their wastewater. Responses for the toxic organic compounds selected as pollutant parameters and toxic metals considered for regulation are summarized in Table V-28 (page 712) for those plants responding to that portion of the dcp. Although most of the plants indicated that these compounds were believed to be absent, several did report that they believed specific pollutant parameters were present in their wastewater.

ANODE AND CATHODE PASTE PLANT WET AIR POLLUTION CONTROL

Plants manufacturing Soderberg and prebaked anodes blend coal tar pitch and ground coke (metallurgical and petroleum) to form anode paste. Plants may also prepare cathode paste to seal the seams the cathode to prevent iron contamination. These raw materials are crushed, screened, calcined, ground, and blended in the paste plant. This series of operations results in the formation of particulates, tars, oils, and hydrocarbons through degradation of the pitch and coke. Four of the 29 facilities with paste plants report the use of wet scrubbers to control the emission of these pollutants while 22 report the use of dry air pollution control. Anode paste plant wet air pollution control discharge levels are in liters/metric ton (l/kkg) (gal/ton) of paste produced, as shown in Table V-1 (page 659).

Plants using wet air pollution control on the paste plant generally do so to control fugitive hydrocarbon emissions. The variation in the production normalized flows shown in Table V-1 may be a result of the degree of hydrocarbon control required in each plant.

Table V-2 (page 660) summarizes the field sampling data for the toxic and selected conventional and nonconventional pollutants detected. This waste stream is characterized by the presence of the toxic organics acenaphthene, naphthalene, fluoranthene,

benzo(a)anthracene, chrysene, phenanthene, fluorene, and pyrene (all above 1 mg/l) and the conventional pollutant, oil and grease (25 to 1,900 mg/l). These specific pollutants are present as a result of the crushing, screening, and calcining of the pitch and coke.

ANODE BAKE PLANT WET AIR POLLUTION CONTROL

Of the 20 primary aluminum plants with anode bake plants, five utilize wet air pollution controls on anode bake furnaces. The water discharge rates for anode bake plant air pollution control are shown in Table V-3 (page 662). Suspended solids, oil and grease, sulfur compounds and fuel combustion products characterize this effluent stream. Fluorides may also be introduced in plants where recycle of anode "butts" is practiced. The toxic organic pollutants found in anode paste plant wet air pollution control wastewater are also present in anode bake plant wet air pollution control samples. These pollutants evolve during the baking of green anodes in the bake plant, and as such are present in the wastewater. Anode bake plant sampling data are presented in Table V-4 (page 663).

ANODE AND BRIQUETTE CONTACT COOLING

Eleven plants report the use of water for cooling green anodes and briquettes prior to their introduction into the electrolytic cell. Three of the 11 plants use contact cooling water for Soderberg briquettes. Water discharge rates for the 11 plants reporting the anode contact cooling wastewater stream are presented in liters per metric ton of anode cast in Table V-5 (page 665). This waste stream is characterized by the presence of many of the toxic organics discussed above but at reduced concentrations (0.04 to 0.08 mg/l). The raw wastewater data for this stream are shown in Table V-6 (page 666).

CATHODE REPROCESSING

The electrolytic pot is lined with a cathode manufactured from anthracite coal. Upon the failure of a cathode, the pot is taken out of production, emptied, rinsed, and the liner is removed. The cathode is then transferred to cathode reprocessing where it is ground and leached with caustic to solubilize fluoride. Cryolite is precipitated from the leachate by the addition of sodium aluminate. (The operation is conducted to treat hazardous waste as well as to recover cryolite). The water discharge rates reported for cathode reprocessing, in liters per metric ton of cryolite recovered, are shown in Table V-7 (page 668). Due to the raw materials used to manufacture the cathode, this waste stream is characterized by the presence of toxic organic pollutants (less than 0.05 mg/l). Fluoride (63 to 13,000 mg/l), cyanide (58 to 129 mg/l), and total suspended solids (19 to 54,500 mg/l) are also present. The presence of cyanide results from the electrolytic process where high temperatures and a reducing environment induce the formation of cyanide from carbon and nitrogen. The raw wastewater data are shown in Table V-8

(page 669).

POTLINE WET AIR POLLUTION CONTROL

For potline emissions, the water use and discharge in liters per metric ton of aluminum from electrolytic reduction production are shown in Table V-9 (page 674). Flow rates are only based on the production of those potlines controlled by a wet system. Raw wastewater characterization data for potline wet air pollution control, as shown in Table V-10, (page 675) are from samples taken at three primary aluminum plants. Waste streams from potline wet scrubbers or wet electrostatic precipitators contain suspended solids, fluorides and several toxic pollutants. Suspended solids result from dust associated with alumina and cryolite addition to the electrolytic cell. Fluoride results from the use of cryolite, a fluoride salt in the cell. Organic pollutants present can be attributed to anode oxidation. In addition, toxic metal impurities in the alumina can be introduced into this waste stream. These are introduced as part of the dust evolving from the anode.

POTLINE SO_2 WET AIR POLLUTION CONTROL

Two plants currently use sodium scrubbers to control sulfur dioxide emissions from potlines. In both instances the scrubbers follow dry fluoride scrubbing systems. Although the Agency has not sampled this wastewater source, it will contain similar pollutants as potline wet air pollution control, but at much smaller concentrations. Dry fluoride scrubbing systems are reported to have efficiencies approaching 99.9 percent removal of fluoride and 80 percent of organic emissions. Therefore, this waste stream is expected to be relatively pollutant free, with a pH between 6 and 7. Water use rates on a production normalized basis are presented in Table V-11 (page 679).

POTROOM WET AIR POLLUTION CONTROL

For potroom emissions control devices, the anode type, water use, and water discharge rates, in liters per metric ton of aluminum from electrolytic reduction, are shown in Table V-12 (page 680). Flow rates are only based on production levels of potlines controlled by a wet system. As can be seen in Table V-13, (page 681) potroom air pollution control wastewater streams contain pollutants similar to those associated with the potlines at reduced concentrations. This is due to the fact that air circulated through potroom scrubbing systems is diluted as it passes from the pots through the air space above the potline to the scrubbing system in the roof.

DEGASSING WET AIR POLLUTION CONTROL

Most aluminum reduction plants degas molten aluminum before casting. Degassing is usually accomplished by bubbling a gas (chlorine, nitrogen, argon, or a combination of these elements) through the melt. The reported water use and discharge rates for

degassing wet air pollution control, in liters per metric ton of aluminum degassed, are shown in Table V-14 (page 686). Raw wastewater from this waste stream is characterized by the presence of toxic metals at very low concentrations. The raw wastewater data are shown in Table V-15 (page 687).

POT REPAIR AND POT SOAKING

Periodically electrolytic cells fail, and the carbon liner or cathode is removed. Generally water is used to soften the liner and to facilitate removal. Water dumped from the cell will contain cyanide and fluorides similar to cathode reprocessing wastewater. Analytical data supplied by industry representatives show TSS concentrations ranging from 10-400 mg/l and fluoride ranging from 1,800-7,000 mg/l. Cyanide was reported as 438 mg/l. Data on water use for this process are limited. Several plants were contacted through Section 308 authority after proposal to try to quantify water usage. Data were received from only one company, indicating water usage rates of 710 l/kkg to 3.3 l/kkg of aluminum reduced. Additional water use data were taken from the dcp and comments on the draft development document. Another plant visited by the Agency was designed as a zero discharge system through 100 percent reuse. Conversations with industry personnel indicate this operation is normally a zero discharge operation through continued reuse of the soaking water. Three plants are known to reuse 100 percent of their pot soaking-pot repair wastewater. Water usage rates are presented in Table V-16 (page 688).

CASTING CONTACT COOLING WATER

Contact cooling water may be used for casting. The cooling water is frequently recycled but may require a bleed stream (blowdown) to dissipate the buildup of dissolved solids. There are four principal types of casting used in the primary aluminum subcategory: direct chill, stationary, shot, and continuous rod. Twenty-six primary aluminum plants practice direct chill casting, eight plants practice stationary casting, one has shot casting, and three plants have continuous rod casting operations. In the stationary casting method, molten aluminum is poured into cast iron molds and then generally allowed to air cool. The Agency is aware of the use of spray quenching to quickly cool the surface of the molten aluminum once it is cast into the molds; however, this water evaporates on contact with the molten aluminum. As such, the Agency believes that there is no basis for a pollutant discharge allowance. The water use and discharge rates for direct chill and continuous rod casting operations are shown in Tables V-17 through V-19 (pages 689-692), in liters per metric ton of aluminum cast. Organics, in the form of oil and grease (and total phenolics (4-AAP)), may be found in these systems when lubricants are applied. The variety and quantity of organics will be dependent on the type of lubricant used. Sampling data for a direct chill casting operation are presented in Table V-20 (page 693).

The data in the raw wastewater table show that, when compared to the plant intake water analyses, over half of the raw wastewater pollutants are nearly the same or only slightly higher (less than one order of magnitude) than the intake water. Although the sampling data in Table V-20 (page 693) is for direct chill casting, contact cooling water from other types of casting will have similar pollutant characteristics because the raw material, aluminum, is the same in all four operations.

PILOT SCALE WASTEWATER TREATMENT STUDY

Subsequent to proposing amendments to the effluent limitations and standards for the primary aluminum subcategory, the Agency received numerous comments from companies in the primary aluminum subcategory on the proposed mass limitations for benzo(a)pyrene and cyanide. To respond to these comments, the Agency conducted bench and pilot-scale tests on potline scrubber liquor and cathode reprocessing wastewater to determine the effectiveness of various wastewater treatment methods in removing polynuclear aromatic hydrocarbons (PAH) and on the effectiveness of cyanide precipitation in removing cyanide from cathode reprocessing and potroom wet air pollution control wastewater. In the study, the effectiveness of lime and settle, multimedia filtration, and activated carbon were examined using bench scale and pilot scale equipment in a trailer mounted wastewater treatment facility at a primary aluminum plant in the northwestern United States.

PAH Treatment

The study demonstrated that PAH commonly found in primary aluminum wastewaters can be removed using lime and settle technology followed by multimedia filtration. In this study, benzo(a)pyrene was removed to the quantification limit of 0.010 mg/l by lime settle and filter technology. It was demonstrated that activated carbon will also reduce benzo(a)pyrene to the nominal quantification limit of 0.010 mg/l. Analytical results of the study are presented in Tables V-29 through V-33 (pages 713 - 717).

Data obtained from the pilot scale work were used to develop achievable treatment concentrations for the various PAH using lime and settle; lime, settle, and multimedia filtration; and lime, settle, multimedia filtration, and activated carbon adsorption treatment. These long-term average treatment effectiveness concentrations were also used in recalculating pollutant removal estimates.

For the model treatment technology, lime, settle, and filter, the Agency calculated values of 0.0337 mg/l for the daily maximum and 0.0156 mg/l for the average monthly maximum. These values are based on a statistical analysis of the treatability data for benzo-(a)-pyrene obtained in the pilot study. These two values account for variability in the pilot study and variability inherent in the operation of lime, settle, and filter technology.

Potline scrubber liquor also contains treatable concentrations of toxic metals (most notably antimony and nickel), fluoride, aluminum, and suspended solids. Treatment performance for these parameters was measured during the lime, settle, and filter tests performed for the PAH. Results of the analyses are presented in Tables V-32 and V-33 (pages 716 - 717).

As shown in Table V-33, BAT treatment performance for the primary aluminum subcategory was not achieved. At the plant, potline scrubber liquor is processed through the cathode reprocessing circuit to reduce fluoride concentrations. The bleed from cathode reprocessing is then routed back to the potline scrubbing circuit. The cathode reprocessing wastewater, and subsequently the potline scrubber liquor, contain dissolved solids levels in the five to six percent range. It appears that this significant matrix difference between cathode reprocessing wastewater and other plant raw wastewaters used to develop the treatment performance values contributes to less effective performance of the treatment technology. Some of the ramifications of this finding are discussed in detail in Section X of this supplement.

Cyanide Treatment

Prior to performing the pilot scale work, laboratory (bench-scale) studies were performed to identify the necessary reaction steps and chemical quantities required to precipitate the cyanide complexes present in the primary aluminum wastewater matrix. In general, the Agency found that 75 to 90 percent of the cyanide is present as a complex hexacyanoferrate. Thus, the primary function of the laboratory work was to examine the methods and variables affecting the conversion of free cyanide and hexacyanoferrate (III) complexes to hexacyanoferrate (II) so that cyanide complexes may be precipitated as prussian blue. A general description of the operating procedures used in the lab for cyanide precipitation is presented below:

1. Adjust pH to 9,
2. Add $FeSO_4$,
3. Rapid mix,
4. Adjust pH (3 to 5),
5. Add $FeSO_4$, $FeCl_3$,
6. Rapid mix for 10 minutes,
7. Settle for one hour, and
8. Filter (pressure).

Information obtained in the laboratory was then tested on a pilot scale level at a primary aluminum reduction facility using cathode reprocessing wastewater.

Laboratory work performed by industry on cyanide bearing wastewaters from two primary aluminum plants indicates that ferric chloride addition does not increase the amount of cyanide precipitated from the wastewater. As the ferrous sulfate dosage was held constant, the ferric chloride addition was varied with

no noticeable increase in cyanide removal. This data tends to indicate that ferric chloride addition has little or no effect on the precipitation of iron cyanide complexes.

The Agency's pilot scale treatability studies revealed that the treatability limits for cyanide precipitation are not transferable from coil coating to the primary aluminum wastewater matrix. The cryolite recovery operations discharge much higher concentrations of cyanide than observed in coil coating and impair treatment by also discharging extremely high dissolved solids concentrations (five to six percent) that interfere with precipitation chemistry.

From the pilot scale work it was determined that cyanide precipitation can achieve 2.3 mg/l cyanide, and the addition of multimedia filtration will further reduce cyanide to 1.1 mg/l. Since a full scale cyanide precipitation unit is not used anywhere in the industry, the mean variability factors obtained from the combined metals data base (CMDB) are used to calculate the one-day maximum and ten day average concentrations. The Agency received comments to the proposed regulation stating that the transfer of the CMDB variability factors is not appropriate because the precipitate formed during cyanide precipitation will have different settling characteristics than the lime and metal hydroxide sludge. However, since cyanide precipitation is not currently run at full scale, the CMDB variability factors will be used due to the lack of any other data.

TABLE V-1

WATER DISCHARGE RATES FOR ANODE AND CATHODE PASTE PLANT
WET AIR POLLUTION CONTROL
(l/kkg)

Plant Code	Percent Recycle	Production Normalized Discharge Flow
353	0	2202
354	0	1434
365	0	754
369	0	817

Table V-2

PRIMARY ALUMINUM SAMPLING DATA
ANODE PASTE PLANT WET AIR POLLUTION CONTROL
RAW WASTEWATER

Pollutant	Stream Code	Sample Type†	Source	Concentrations (mg/l) Day 1	Day 2	Day 3	Average
Toxic Pollutants(a)							
1. acenaphthene	144	3	*	29.0	12.0	ND	20.5
20. 2-chloronaphthalene	144	3	ND	0.041	ND	ND	0.041
39. fluoranthene	144	3	*	8.0	3.6	3.5	5.0
42. bis(2-chloroisopropyl) ether	144	3	ND	0.025	ND	*	0.013
55. naphthalene	144	3	ND	7.7	1.8	0.27	3.3
62. N-nitrosodiphenylamine	144	3	ND	0.057	*	*	0.2
66. bis(2-ethylhexyl) phthalate	144	3	*	2.5	*	0.023	0.84
68. di-n-butyl phthalate	144	3	ND	*	ND	0.022	0.011
72. benzo(a)anthracene	144	3	ND	1.8	0.63	0.78	1.1
73. benzo(a)pyrene	144	3	ND	0.49	0.03	0.19	0.2
74. benzo(b)fluoranthene (b)	144	3	*	0.87	0.091	0.15	0.37
75. benzo(k)fluoranthene (b)							
76. chrysene	144	3	ND	2.2	0.81	1.1	1.4
77. acenaphthylene	144	3	ND	0.035	*	ND	0.018
78. anthracene (c)	144	3	*	22.0	11.0	7.7	13.6
81. phenanthrene (c)							
80. fluorene	144	3	ND	5.3	1.75	1.8	3.0
84. pyrene	144	3	*	6.4	2.9	3.0	4.1
114. antimony	144	3	<0.005	<0.005	<0.005	<0.005	<0.005
115. arsenic	144	3	<0.001	<0.001	0.004	<0.001	0.0013
117. beryllium	144	3	<0.0005	<0.0005	<0.0005	<0.0005	<0.0005
118. cadmium	144	3	<0.001	<0.001	<0.001	<0.001	<0.001
119. chromium	144	3	0.008	0.010	0.008	0.006	0.008
120. copper	144	3	0.029	0.016	0.035	0.02	0.024
121. cyanide	28	1		0.002			0.002
	144	3	0.14	0.064	0.021	0.007	0.031
122. lead	144	3	0.01	0.026	0.5	0.011	0.2
123. mercury	144	3	0.0002	0.0002	<0.0002	<0.0002	0.0001
124. nickel	144	3	0.012	0.004	0.004	0.015	0.008
125. selenium	144	3	0.25	<0.008	<0.008	<0.008	<0.008
126. silver	144	3	0.0005	<0.001	0.004	<0.0005	<0.001
127. thallium	144	3	<0.001	<0.001	<0.001	<0.001	<0.001
128. zinc	144	3	0.02	0.02	0.02	<0.02	0.01

Table V-2 (Continued)

PRIMARY ALUMINUM SAMPLING DATA
ANODE PASTE PLANT WET AIR POLLUTION CONTROL
RAW WASTEWATER

Pollutant	Stream Code	Sample Type†	Source	Concentrations (mg/l) Day 1	Day 2	Day 3	Average
Nonconventionals							
ammonia	144	1	0.44	3.8	2.7	2.0	2.8
chemical oxygen demand (COD)	144	3		300	180	50	177
fluoride	144	3		0.58	0.3	0.34	0.4
phenols (total; by 4-AAP method)	28	1		0.086			0.086
	144	1	0.014	ND	0.41	3.0	1.7
total organic carbon (TOC)	144	3		56	16	15	29
Conventionals							
oil and grease	28	1		25			25
	144	1	<1.0	1,900	160	56	705
total suspended solids (TSS)	144	3		34	19	16	23
pH (standard units)	144	1	5.0	6.0	6.0		

(a) No samples were analyzed for asbestos and the volatile, pesticide, or acid extractable toxic organic pollutants.

(b), (c) Sum of two compunds not separate by method used.

†Sample type. Note: These numbers also apply to subsequent sampling data tables in this section.

1 - one-time grab
2 - 24-hour manual composite
3 - 24-hour automatic composite
4 - 48-hour manual composite
5 - 48-hour automatic composite
6 - 72-hour manual composite
7 - 72-hour automatic composite

*Indicates less than or equal to 0.01 mg/l.
**Indicates less than or equal to 0.005 mg/l.

TABLE V-3

WATER DISCHARGE RATES FOR ANODE BAKE PLANT
WET AIR POLLUTION CONTROL
(l/kkg of Anodes Baked)

Plant Code	Furnace Type	Scrubber Type	Percent Recycle	Production Normalized Discharge Flow
354	Open top ring furnace	Spray tower, wet ESP	99+	728
342	Tunnel kiln	Spray tower, dry	0	11380
343	Closed top ring furnace	Venturi	0	43235
364	Open top ring furnace	Spray tower, dry	0	496
371	Open top ring furnace	Wet ESP	91	1526

Table V-4

PRIMARY ALUMINUM SAMPLING DATA
ANODE BAKE PLANT SCRUBBER LIQUOR
RAW WASTEWATER

Pollutant	Stream Code	Sample Type	Source	Concentrations (mg/l) Day 1	Day 2	Day 3	Average
Toxic Pollutants(a)							
1. acenaphthene	135	3	ND	0.041	0.043	0.011	0.032
39. fluoranthene	135	3	*	20	32	12	21
55. naphthalene	135	3	ND	0.026	0.02	ND	0.023
66. bis(2-ethylhexyl) phthalate	135	3	*	0.028	ND	0.035	0.032
68. di-n-butyl phthalate	135	3	ND	*	ND	ND	*
69. di-n-octyl phthalate	135	3	*	ND	ND	*	*
72. benzo(a)anthracene	135	3	ND	5.8	7.8	2.7	5.4
73. benzo(a)pyrene	135	3	ND	1.5	2.0	ND	1.8
76. chrysene	135	3	ND	11.0	14.0	4.8	9.9
78. anthracene (b)	135	3	*	10.0	21.0	7.5	12.8
81. phenanthrene (b)							
79. benzo(ghi)perylene	135	3	ND	2.4	ND	ND	2.4
80. fluorene	135	3	ND	0.14	0.302	0.134	0.19
82. dibenzo(a,h)anthracene	135	3	ND	0.87	ND	ND	0.87
83. indeno (1,2,3-cd)pyrene	135	3	ND	1.6	ND	ND	1.6
84. pyrene	135	3	ND	21.0	34.0	12.0	22.3
114. antimony	135	3	<0.005	0.06	0.28	0.49	0.3
115. arsenic	135	3	<0.001	0.12	0.36	0.06	0.2
117. beryllium	135	3	<0.0005	0.03	0.03	0.03	0.03
118. cadmium	135	3	<0.001	0.07	0.07	0.07	0.07
119. chromium	135	3	0.011	0.031	0.014	0.02	0.02
120. copper	135	3	0.041	0.08	0.08	0.07	0.08
121. cyanide	135	1		1.1	1.4	1.4	1.3
122. lead	135	3	0.17	0.36	0.34	0.43	0.38
123. mercury	135	3	<0.0002	0.0003	<0.0002	<0.0002	0.0001
124. nickel	135	3	<0.005	0.23	0.25	0.26	0.25
125. selenium	135	3	<0.008	0.13	0.17	0.12	0.14
126. silver	135	3	<0.002	0.011	0.008	0.006	0.008
127. thallium	135	3	<0.001	0.34	0.33	0.39	0.35
128. zinc	135	3	0.04	0.3	0.27	0.26	0.28

Table V-4 (Continued)

PRIMARY ALUMINUM SAMPLING DATA
ANODE BAKE PLANT SCRUBBER LIQUOR
RAW WASTEWATER

Pollutant	Stream Code	Sample Type	Source	Concentrations (mg/l) Day 1	Day 2	Day 3	Average
Nonconventionals							
ammonia	135	1		0.71	1.4	0.6	0.9
chemical oxygen demand (COD)	135	3		890	1,800	1,800	1,500
fluoride	135	3		2,000	2,400	2,300	2,200
phenols (total; by 4-AAP method)	135	1		<0.001	<0.001	<0.001	<0.001
total organic carbon (TOC)	135	3		1,000	750	570	770
Conventionals							
oil and grease	135	1		10	15	17	14
total suspended solids (TSS)	135	3		270	280	470	340
pH (standard units)	135	1	5	6.8	8.0	8.0	

(a) No samples were analyzed for the acid extractable, pesticide, or volatile organics fractions of the toxic pollutants.

(b) Reported together.

TABLE V-5

WATER DISCHARGE RATE FOR
ANODE CONTACT COOLING AND BRIQUETTE QUENCHING
(l/kkg of Green Anodes or Briquettes Manufactured)

Plant Code	Recycle	Production Normalized Discharge Flow
345*	96	988
349	0	9174
353	NA	NA
354	0	1434
356	NA	NA
357	100	0
371	0	1051
359*	0	2711
360*	0	1472
367	97	113
6101	NA	NA

* Briquette Quenching

Table V-6

PRIMARY ALUMINUM SAMPLING DATA
PASTE PLANT CONTACT COOLING WATER
RAW WASTEWATER

Pollutant	Stream Code	Sample Type	Source	Concentrations (mg/l) Day 1	Day 2	Day 3	Average
Toxic Pollutants(a)							
1. acenaphthene	137	1	ND	0.04			0.04
39. fluoranthene	137	1	*	0.13			0.13
55. naphthalene	137	1	ND	*			*
66. bis(2-ethylhexyl) phthalate	137	1	*	0.016			0.016
68. di-n-butyl phthalate	137	1	ND	*			*
72. benzo(a)anthracene	137	1	ND	0.054			0.054
73. benzo(a)pyrene	137	1	ND	0.041			0.041
76. chrysene	137	1	ND	0.08			0.08
78. anthracene (b)	137	1	*	0.11			0.11
81. phenanthrene (b)							
79. benzo(ghi)perylene	137	1	ND	0.019			0.019
80. fluorene	137	1	ND	*			*
82. dibenzo(a,h)anthracene	137	1	ND	0.012			0.012
83. indeno(1,2,3-cd)pyrene	137	1	ND	0.028			0.028
84. pyrene	137	1	ND	0.15			0.15
114. antimony	137	1		<0.005			<0.005
115. arsenic	137	1	<0.001	<0.001			<0.001
117. beryllium	137	1		<0.0005			<0.0005
118. cadmium	137	1		<0.001			<0.001
119. chromium	137	1	0.011	0.01			0.01
120. copper	137	1	0.041	0.18			0.18
121. cyanide	28	1		0.002			0.002
	137	1		0.003			0.003
122. lead	137	1	0.17	0.008			0.008
123. mercury	137	1	<0.0002	<0.0002			<0.0002
124. nickel	137	1	<0.005	0.015			0.015
125. selenium	137	1		<0.008			<0.008
126. silver	137	1	<0.001	<0.0005			<0.0005
127. thallium	137	1		<0.001			<0.001
128. zinc	137	1	0.04	0.02			0.02

Table V-6 (Continued)

PRIMARY ALUMINUM SAMPLING DATA
PASTE PLANT CONTACT COOLING WATER
RAW WASTEWATER

Pollutant	Stream Code	Sample Type	Source	Concentrations (mg/l) Day 1	Day 2	Day 3	Average
Nonconventionals							
ammonia	137	1		0.41			0.41
chemical oxygen demand (COD)	137	1		50			50
fluoride	137	1		2.6			2.6
phenols (total; by 4-AAP method)	28	1		0.086			0.086
	137	1		0.007			0.007
total organic carbon	137	1		150			150
Conventionals							
oil and grease	28	1		25			25
	137	1		28			28
total suspended solids (TSS)	137	1		4.0			4.0
pH (standard units)	137	1	5.0	5.0			
	28	1		7.4	7.9		

(a) No samples were analyzed for the volatile, pesticide, or acid extractable toxic organic pollutants.

(b) Reported together.

TABLE V-7

WATER DISCHARGE RATES FOR CATHODE REPROCESSING
(l/kkg of Cryolite Production)

Plant Code	Discharge Flow
369	62050
363	8400
368	31700
370	34540

Table V-8

PRIMARY ALUMINUM SAMPLING DATA
CATHODE REPROCESSING
RAW WASTEWATER

Pollutant	Stream Code	Sample Type	Source	Concentrations (mg/l) Day 1	Day 2	Day 3	Average
Toxic Pollutants(a)							
1. acenaphthene	127	1	*	ND			
	142	3	*	*	*	*	*
4. benzene	127	1	0.026	0.016			0.016
23. chloroform	127	1	0.02	*			0.02
39. fluoranthene	127	1	*	0.179			0.179
	142	3	*	0.112	0.1	0.073	0.095
54. isophorone	142	3	ND	*	ND	ND	*
55. naphthalene	127	1	*	ND			
	142	3	ND	*	ND	*	*
62. N-nitrosodiphenylamine	142	3	ND	ND	ND	*	*
66. bis(2-ethylhexyl) phthalate	127	1	0.033	0.437			0.437
	142	3	*	*	*	*	*
67. butyl benzyl phthalate	127	1	*	0.085			0.085
	142	3	ND	ND	ND	ND	
68. di-n-butyl phthalate	127	1	ND	*			*
	142	3	ND	*	ND	ND	*
70. diethyl phthalate	127	1		ND			
	142	3	ND	*	ND	ND	*
72. benzo(a)anthracene	127	1	ND	ND			
	142	3	ND	<0.11	0.014	0.029	0.014
73. benzo(a)pyrene	127	1	ND	ND			
	142	3	ND	0.029	0.017	*	0.015
74. benzo(b)fluoranthene (b)	127	1	ND	ND			
75. benzo(k)fluroanthene (b)	142	3	*	0.035	0.021	0.018	0.025

Table V-8 (Continued)

PRIMARY ALUMINUM SAMPLING DATA
CATHODE REPROCESSING
RAW WASTEWATER

Pollutant	Stream Code	Sample Type	Source	Concentrations (mg/l) Day 1	Day 2	Day 3	Average
Toxic Pollutants(a) (Cont.)							
76. chrysene	127	1	*	ND			
	142	3	ND	<0.11	0.046	0.056	0.034
77. acenaphthylene	127	1		ND			
	142	3	ND	*	*	*	*
78. anthracene (c)	127	1	0.016	0.098			0.098
81. phenanthrene (c)	142	3	*	0.036	0.041	0.029	0.35
79. benzo(ghi)perylene	127	1		ND			
	142	3	ND	ND	ND	*	*
80. fluorene	127	1		ND			
	142	3	ND	*	*	*	*
82. dibenzo(a,h)anthracene	127	1		ND			
	142	3	ND	ND	ND	*	*
83. indeno(1,2,3-cd)pyrene	127	1		ND			
	142	3	ND	ND	ND	*	*
84. pyrene	127	1	*	0.179			0.179
	142	3	*	0.11	0.092	0.074	0.092
90. dieldrin	127	1	**	**			**
91. chlordane	127	1	**	**			**
92. 4,4'-DDT	127	1	**	**			**
93. 4,4'-DDE	127	1	**	ND			
99. endrin aldehyde	127	1	**	**			**
100. heptachlor	127	1	**	**			**

Table V-8 (Continued)

PRIMARY ALUMINUM SAMPLING DATA
CATHODE REPROCESSING
RAW WASTEWATER

Pollutant	Stream Code	Sample Type	Source	Concentrations (mg/l) Day 1	Day 2	Day 3	Average
Toxic Pollutants(a) (Cont.)							
101. heptachlor epoxide	127	1	**	**			**
103. beta-BHC	127	1	**	**			**
104. gamma-BHC	127	1	ND	**			**
107. PCB-1254	127	1	**	**			**
110. PCB-1248	127	1	**	**			**
114. antimony	127	1	<0.1	<0.1			<0.1
	142	3	<0.005	0.1	0.05	0.23	0.13
115. arsenic	127	1	<0.01	0.61			0.61
	142	3	<0.001	0.38	0.14	0.15	0.22
117. beryllium	127	1	<0.01	0.4			0.4
	142	3	<0.0005	0.002	0.002	0.02	0.008
118. cadmium	127	1	<0.02	0.2			0.2
	142	3	<0.001	<0.001	<0.001	0.05	0.02
119. chromium	127	1	<0.05	0.6			0.6
	142	3	0.008	0.009	0.008	0.025	0.014
120. copper	127	1	0.09	1.0			1.0
	142	3	0.029	1.3	0.83	1.6	1.2
121. cyanide	127	1		129			129
	142	3	0.14	100	58	65	74
122. lead	127	1	0.3	5			5.0
	142	3	0.01	0.11	0.1	0.19	0.13
123. mercury	127	1	0.0001	0.0062			0.0062
	142	3	0.0002	<0.0002	<0.0002	<0.0002	<0.0002

Table V-8 (Continued)

PRIMARY ALUMINUM SAMPLING DATA
CATHODE REPROCESSING
RAW WASTEWATER

Pollutant	Stream Code	Sample Type	Source	Concentrations (mg/l) Day 1	Day 2	Day 3	Average
Toxic Pollutants(a) (Cont.)							
124. nickel	127	1	0.2	4.0			4.0
	142	3	0.012	0.87	0.59	1.3	0.92
125. selenium	127	1	0.01	0.01			0.01
	142	3	0.25	0.7	0.092	44	14.93
126. silver	127	1	<0.02	<0.02			<0.02
	142	3	0.005	0.06	0.025	0.045	0.04
127. thallium	127	1	<0.1	<0.1			<0.1
	142	3	<0.001	<0.005	<0.001	0.39	0.13
128. zinc	127	1	<0.6	1.0			1.0
	142	3	0.02	0.04	0.01	0.06	0.04
Nonconventionals							
aluminum	127	1	1.0	3,000			3,000
ammonia	127	1		115			115.0
	142	3	0.44	18	9.4	10	12
calcium	127	1	<50	1,300			1,300
chemical oxygen demand (COD)	127	1		27,200			27,200
	142	3		200	300	400	300
fluoride	127	1		13,000			13,000
	142	3		1,160	790	1,070	1,007
iron	127	1	3.0	2,000			2,000
magnesium	127	1	5.0	6.0			6.0
manganese	127	1	0.3	4.0			4.0
phenols (total; by 4-AAP method)	127	1		0.008			0.008
	142	1	0.014	0.024	0.18	0.6	0.3
total organic carbon (TOC)	127	1		2,030			2,030
	142	3		82	280	100	154

Table V-8 (Continued)

PRIMARY ALUMINUM SAMPLING DATA
CATHODE REPROCESSING
RAW WASTEWATER

Pollutant	Stream Code	Sample Type	Source	Concentrations (mg/l) Day 1	Day 2	Day 3	Average
Conventionals							
oil and grease	127	1		5			5
	142	1	<1	72	25	1,400	499
total suspended solids (TSS)	127	1		54,500			54,500
	142	3		25	19	130	58
pH (standard units)	142	1	5	11	11		

(a) No sample was analyzed for the acid extractable toxic organic pollutants. The volatile and pesticide fractions were not analyzed for in stream 142.

(b),(c) Reported together.

TABLE V-9

WATER DISCHARGE RATES FOR POTLINE WET AIR POLLUTION CONTROL
(l/kkg of Aluminum Reduction Production)

Plant Code	Cell Type	Scrubber Type	Percent Recycle	Production Normalized Discharge Flow
363	PB, HSS	Solid cone spray, wet scrubber	100	0
369	HSS	Wet ESP	91	592
346	PS	Scrubbers, ESP	0	2047
349	VSS	Venturi followed by packed section	96	1160
368	HSS	Wet ESP	99+	1150
370	HHS	Floating bed, wet scrubbers	99+	463
348	PB	Multiple cyclones and floating bed	NR	NR
366	HSS	Wet ESP	NR	NR

NR -- not reported

Table V-10

PRIMARY ALUMINUM SAMPLING DATA
POTLINE WET AIR POLLUTION CONTROL
RAW WASTEWATER

Pollutant	Stream Code	Sample Type	Source	Concentrations (mg/l) Day 1	Day 2	Day 3	Average
Toxic Pollutants(a)							
1. acenaphthene	145	3	*	0.088	0.25	0.84	0.39
	194	4	ND	0.05			0.05
4. benzene	194	4	ND	*			*
39. fluoranthene	145	3	*	2.2	4.1	26.0	10.8
	194	4	*	0.32			0.32
44. methylene chloride	194	4	*	*			
55. naphthalene	145	3	ND	ND	0.03	ND	0.03
	194	4	ND	0.02			0.02
65. phenol	194	4		0.07			0.07
66. bis(2-ethylhexyl) phthalate	145	3	*	0.02	0.041	0.075	0.04
	194	4	0.02	*			*
67. butyl benzyl phthalate	145	3	ND	ND	0.012	ND	0.012
	194	4	ND	ND			
68. di-n-butyl phthalate	145	3	ND	*	*	0.061	0.020
	194	4	ND	ND			
72. benzo(a)anthracene	145	3	ND	0.86	1.9	14.0	5.6
	194	4	*	0.18			0.18
73. benzo(a)pyrene	145	3	ND	ND	1.3	11.0	6.2
	194	4	*	0.57			0.57
74. benzo(b)fluoranthene	145 (b)	3	*	0.75	1.7	11.0	4.5
	194	4	ND	0.26			0.26
75. benzo(k)fluoranthene	145 (b)	3	*	0.75	1.7	11.0	4.5
	194	4	*	0.21			0.21
76. chrysene	145	3	ND	1.4	3.1	30.0	11.5
	194	4	ND	0.23			0.23

Table V-10 (Continued)

PRIMARY ALUMINUM SAMPLING DATA
POTLINE WET AIR POLLUTION CONTROL
RAW WASTEWATER

Pollutant	Stream Code	Sample Type	Source	Concentrations (mg/l) Day 1	Day 2	Day 3	Average
Toxic Pollutants(a) (Cont.)							
77. acenaphthylene	145	3	ND	*	*	ND	*
	194	4	ND	*			*
78. anthracene (c)	145	3	*	0.092	0.34	3.1	1.2
81. phenanthrene (c)	194	4	*	0.15			0.15
79. benzo(ghi)perylene	145	3	ND	ND	0.27	1.0	0.64
	194	4	ND	0.15			0.15
80. fluorene	145	3	ND	*	0.039	0.24	0.093
	194	4	ND	0.05			0.05
82. dibenzo(a,h)anthracene	145	3	ND	ND	0.096	3.1	1.6
	194	4	ND	0.11			0.11
83. indeno(1,2,3-cd)pyrene	145	3	ND	ND	0.290	1.900	1.10
	194	4	ND	0.350			0.350
84. pyrene	145	3	*	2.3	4.3	27.0	11
	194	4	*	0.22			0.22
86. toluene	194	4	*	*			*
114. antimony	145	3	<0.005	1.5	0.05	0.88	0.8
	194	4	0.03	0.45			0.45
115. arsenic	145	3	<0.001	1.4	1.2	1.5	1.4
	194	4	<0.01	<0.01			<0.01
117. beryllium	145	3	<0.005	0.03	0.04	0.04	0.04
	194	4	<0.001	<0.001			<0.001
118. cadmium	145	3	<0.001	0.08	0.09	0.09	0.09
	194	4	0.0018	0.01			0.01
119. chromium	145	3	0.008	0.022	0.021	0.01	0.02
	194	4	<0.004	<0.004			<0.004

Table V-10 (Continued)

PRIMARY ALUMINUM SAMPLING DATA
POTLINE WET AIR POLLUTION CONTROL
RAW WASTEWATER

Pollutant	Stream Code	Sample Type	Source	Concentrations (mg/l) Day 1	Day 2	Day 3	Average
Toxic Pollutants(a) (Cont.)							
120. copper	145	3	0.029	0.096	0.11	0.11	0.11
	194	4	0.0055	0.026			0.026
121. cyanide	145	3	0.14	180	180	150	170
	194	4	<0.004	<0.004			<0.004
122. lead	145	3	0.01	0.42	0.46	0.49	0.46
	194	4	<0.022	<0.022			<0.022
123. mercury	145	3	0.0002	<0.0002	<0.0002	<0.0002	<0.0002
	194	4	<0.002	<0.004			<0.004
124. nickel	145	3	0.012	0.31	0.37	0.47	0.38
	194	4	0.042	3.9			3.9
125. selenium	145	3	0.25	1.8	1	0.75	1.2
	194	4	<0.001	<0.002			<0.002
126. silver	145	3	0.0005	0.36	0.23	0.21	0.27
	194	4	<0.002	<0.004			<0.004
127. thallium	145	3	<0.001	0.62	0.66	0.69	0.66
	194	4	<0.05	<0.09			<0.09
128. zinc	145	3	0.02	0.09	0.1	0.1	0.1
	194	4	0.032	0.065			0.065
Nonconventionals							
ammonia	145	1	0.44	14.0	8.8	5.9	9.6
chemical oxygen demand (COD)	145	3		1,200	1,300	2,100	1,533
fluoride	145	1		610	990	400	700
phenols (total; by 4-AAP method)	145	1	0.014	0.5	0.45	0.13	0.4
	194	4	<0.005	0.725			0.725
total organic carbon (TOC)	145	3		1,800	1,300	1,800	1,600

Table V-10 (Continued)

PRIMARY ALUMINUM SAMPLING DATA
POTLINE WET AIR POLLUTION CONTROL
RAW WASTEWATER

Pollutant	Stream Code	Sample Type	Source	Concentrations (mg/l) Day 1	Day 2	Day 3	Average
Conventionals							
oil and grease	145	1	<1	11.0	5.9	260.0	92
total suspended solids (TSS)	145	3		320	310	2,800	1,100
pH (standard units)	145	1	5	10	10		

(a) Stream 145: No asbestos, volatile, acid extractable, or pesticide organic pollutant samples were analyzed.
Stream 194: No pesticide fraction was analyzed.
No asbestos sample was analyzed.

(b),(c) Reported together.

TABLE V-11

WATER DISCHARGE RATES FOR POTLINE SO2 WET AIR POLLUTION CONTROL
(l/kkg of Aluminum Reduced)

Plant Code	Percent Recycle	Discharge Flow
359	77	1430
360	75	1500

TABLE V-12

WATER DISCHARGE RATES FOR POTROOM WET AIR POLLUTION CONTROL
(l/kkg of Aluminum Reduction Production)

Plant Code	Cell Type	Scrubber Type	Percent Recycle	Production Normalized Discharge Flow
353	PB	104 low pressure wet scrubber	42	1593
354	PB	Low pressure spray type	98	568
364	PB	Cross flow packed bed wet scrubber	98	2790
349	VSS	Low energy foam scrubber	99	70
360	VSS	Low pressure sprays	90	25024
359	VSS	Low pressure sprays	93	1685
361	PB	NR	NR	NR
351	PB	Water spray wet	0	169000

Table V-13

PRIMARY ALUMINUM SAMPLING DATA
POTROOM WET AIR POLLUTION CONTROL
RAW WASTEWATER

Pollutant	Stream Code	Sample Type	Source	Concentrations (mg/l) Day 1	Day 2	Day 3	Average
Toxic Pollutants(a)							
1. acenaphthene	26 195	3 4	ND	ND *	ND		*
4. benzene	26 195	1 4	ND	* ND			*
23. chloroform	26 195	1 4	ND	0.023 ND			0.023
39. fluoranthene	26 195	3 4	*	ND 0.11			0.11
44. methylene chloride	26 195	1 4	*	0.055 ND			0.055
54. isophorone	26 195	3 4	ND	* ND	ND		*
55. naphthalene	26 195	3 4	ND	* ND	ND		*
66. bis(2-ethylhexyl) phthalate	26 195	3 4	0.02	0.13 0.03	0.011		0.071 0.03
67. butyl benzyl phthalate	26 195	3 4	ND	0.068 ND	ND		0.068
68. di-n-butyl phthalate	26 195	3 4	ND	0.126 ND	ND		0.126
72. benzo(a)anthracene	26 195	3 4	*	ND 0.04	ND		0.04
73. benzo(a)pyrene	26 195	3 4	*	ND 0.04	ND		0.04
76. chrysene	26 195	3 4	ND	ND 0.03	ND		0.03

Table V-13 (Continued)

PRIMARY ALUMINUM SAMPLING DATA
POTROOM WET AIR POLLUTION CONTROL
RAW WASTEWATER

Pollutant	Stream Code	Sample Type	Source	Concentrations (mg/l) Day 1	Day 2	Day 3	Average
Toxic Pollutants(a) (Cont.)							
78. anthracene	26	3		ND	ND		
	195	4	*	0.01			0.01
79. benzo(ghi)perylene	26	3		ND	ND		
	195	4	ND	0.01			0.01
83. indeno(1,2,3-cd)pyrene	26	3		ND	ND		
	195	4	ND	*			*
84. pyrene	26	3		ND	ND		
	195	4	*	0.05			0.05
86. toluene	26	1		*			*
	195	4	*	ND			
87. trichloroethylene	26	1		*			
	195	4	ND	ND			
89. aldrin (b)	26	3		**			**
90. dieldrin (b)							
92. 4,4'-DDT (b)							
93. 4,4'-DDE (b)							
94. 4,4'-DDD (b)							
95. alpha-endosulfan (b)							
96. beta-endosulfan (b)							
97. endosulfan sulfate (b)							
98. endrin (b)							
99. endrin aldehyde (b)							
100. heptachlor (b)							
101. heptachlor epoxide (b)							
102. alpha-BHC (b)							
103. beta-BHC (b)							
104. gamma-BHC (b)							
105. delta-BHC (b)							
91. chlordane	26	3		**			**

Table V-13 (Continued)

PRIMARY ALUMINUM SAMPLING DATA
POTROOM WET AIR POLLUTION CONTROL
RAW WASTEWATER

Pollutant		Stream Code	Sample Type	Source	Concentrations (mg/l) Day 1	Day 2	Day 3	Average
Toxic Pollutants(a) (Cont.)								
106. PCB-1242	(c)	26	3		<0.03			<0.03
107. PCB-1254	(c)							
108. PCB-1221	(c)							
109. PCB-1232	(d)	26	3		<0.015			<0.015
110. PCB-1248	(d)							
111. PCB-1260	(d)							
112. PCB-1016	(d)							
113. toxaphene		26	3		<0.01			<0.01
114. antimony		26	3		(e)	0.400	1.000	0.700
		195	4	0.03	0.05			0.05
115. arsenic		26	3		(e)	0.300	0.400	0.350
		195	4	<0.01	<0.01			<0.01
116. asbestos (MFL)		26	1	0.0	310 (MFL)			310
117. beryllium		26	3		(e)	<0.02	<0.02	<0.02
		195	4	<0.001	<0.001			<0.001
118. cadmium		26	3		(e)	<0.2	<0.2	<0.2
		195	4	0.0018	0.0026			0.0026
119. chromium		26	3		(e)	<0.24	0.43	0.22
		195	4	<0.004	<0.004			<0.004
120. copper		26	3		(e)	<0.04	0.05	0.03
		195	4	<0.0066	0.018			0.018
121. cyanide		26	1		0.022	0.025	0.026	0.024
		195	4	<0.004	<0.004			<0.004
122. lead		26	3		(e)	<0.6	<0.6	<0.6
		195	4	<0.022	<0.022			<0.022
123. mercury		26	3	<0.0001	<0.0001		<0.0001	<0.0001
		195	4	<0.002	<0.002			<0.002

Table V-13 (Continued)

PRIMARY ALUMINUM SAMPLING DATA
POTROOM WET AIR POLLUTION CONTROL
RAW WASTEWATER

Pollutant	Stream Code	Sample Type	Source	Concentrations (mg/l) Day 1	Day 2	Day 3	Average
Toxic Pollutants(a) (Cont.)							
124. nickel	26	3		(e)	<0.5	<0.5	<0.5
	195	4	0.042	0.039			0.039
125. selenium	26	3		(e)	0.6	0.35	0.5
	195	4	<0.001	<0.001			<0.001
126. silver	26	3		(e)	<0.25	<0.25	<0.25
	195	4	<0.002	<0.002			<0.002
127. thallium	26	3		(e)	<0.05	<0.05	<0.05
	195	4	<0.05	<0.001			<0.001
128. zinc	26	3		(e)	0.46	0.38	0.42
	195	4	0.032	0.055			0.055
Nonconventionals							
aluminum	26	3		(e)	200	200	200
calcium	26	3		(e)	36	24	30
chemical oxygen demand (COD)	26	1		225	359	448	344
fluoride	26	1		150	150	280	193
iron	26	3		(e)	4.0	6.0	5.0
magnesium	26	3		(e)	8.0	5.0	6.5
manganese	26	3		(e)	0.130	<0.100	0.07
phenols (total; by 4-AAP method)	26	1		0.093	0.123	0.164	0.13
	195	4	<0.005	0.158			0.158
total organic carbon (TOC)	26			155	130	155	147

Table V-13 (Continued)

PRIMARY ALUMINUM SAMPLING DATA
POTROOM WET AIR POLLUTION CONTROL
RAW WASTEWATER

Pollutant	Stream Code	Sample Type	Source	Concentrations (mg/l) Day 1	Day 2	Day 3	Average
Conventionals							
oil and grease	26	1		5	2	3	3.3
total suspended solids (TSS)	26	1		2,660	1,983	2,355	2,333
pH (standard units)	26	1		10.0	9.4	9.15	

(a) Stream 195 was not analyzed for the pesticide fraction, acid fraction of organic toxic pollutants, or asbestos. Three samples from stream 26 were analyzed for the acid fraction toxic pollutants; none was detected.
(b),(c),(d) Reported together.

(e) Metals samples for Day 1 were analyzed; however, the large variation of this data from Days 2 and 3 made it suspect, so it was not used in developing these regulations

(MFL) - Million fibers per liter.

TABLE V-14

WATER DISCHARGE RATES FOR DEGASSING WET AIR POLLUTION CONTROL
((l/kkg of Aluminum Refined and Degassed)

Plant Code	Scrubber Type	Percent Recycle	Production Normalized Discharge Flow
354	Venturi	0	2840
369	Packed Tower	0	1860
359	ESP	0	3130
361*	NR	NR	NR

*Data reported with potline and potroom scrubbing and cannot be separated.

NR -- Not reported

Table V-15

PRIMARY ALUMINUM SAMPLING DATA
REFINING AND DEGASSING WET AIR POLLUTION CONTROL
RAW WASTEWATER

Pollutant	Stream Code	Sample Type	Source	Concentrations (mg/l) Day 1	Day 2	Day 3	Average
Toxic Pollutants(a)							
114. antimony	150	1		<0.0005			<0.0005
115. arsenic	150	1		0.0076			0.0076
117. beryllium	150	1		0.0001			0.0001
118. cadmium	150	1		<0.002			<0.002
119. chromium	150	1		<0.004			<0.004
120. copper	150	1		0.01			0.01
121. cyanide	150	1	<0.01	0.14			0.14
122. lead	150	1		<0.01			<0.01
123. mercury	150	1		0.0019			0.0019
124. nickel	150	1		0.014			0.014
125. selenium	150	1		0.0005			0.0005
126. silver	150	1		<0.002			<0.002
127. thallium	150	1		<0.0005			<0.0005
128. zinc	150	1		0.02			0.02
Nonconventionals							
phenols (total; by 4-AAP method)	150	1	<0.001	<0.001			<0.001

(a) This sample was not analyzed for any toxic organic pollutants, and only phenols of the nonconventional and conventional pollutants.

TABLE V-16

WATER DISCHARGE RATES FOR
POT REPAIR & POT SOAKING
(l/kkg of Aluminum Reduction Production)

Plant Code	Percent Recycle	Production Normalized Discharge Flow
349	NA	146
355	0	10984
356	100	0
357	100	0
358	0	1044
364	NR	130
365	NR	100
366	NR	3.4
369	NR	730
6101	100	0

TABLE V-17

WATER DISCHARGE RATES FOR
POT REPAIR & POT SOAKING
(l/kkg of Aluminum Reduction Production)

Plant Code	Percent Recycle	Production Normalized Discharge Flow
362	99+	123
355	99	459
350	98	1801
340	98	9549
353	94	3303
345	82	2610
357	48	600
352	20	19473
371	0	6964
369	0	12552
349	0	15638
351	0	23477
348	0	27188
365	0	32860
347	0	34903
360	0	38406
367	0	45870
359	0	57129
343	0	59214
370	0	79230
342	93	NA
361	NA	NA
343	NA	NA
366	0	NA
346	NA	NA
6101	NA	NA

TABLE V-18

WATER DISCHARGE RATES FOR
DIRECT CHILL CASTING CONTACT COOLING
(ALUMINUM FORMING CATEGORY)
(l/kkg of Aluminum Cast)

Plant Code	Percent Recycle	Production Normalized Discharge Flow
1	100	0
2	100	0
3	50	0
4	97	0
5	100	0
6	100	0
7	100	0
8	100	0
9	100	0
10	99	0.2989
11	99	0.3252
12	100	0.4169
13	99	0.4169
14	0	120.9
15	98	150.1
16	97	250.2
17	99	313.4
18	0	392.8
19	NR	496.2
20	NR	514.5
21	97	612.9
22	98	629.6
23	0	779.7
24	93	963.1
25	94	1113
26	97	1167
27	99	1483
28	96	1534
29	96	1955
30	94	2397
31	92	2753
32	0	3002
33	NR	4003

TABLE V-18 (Continued)

WATER DISCHARGE RATES FOR
POT REPAIR & POT SOAKING
(l/kkg of Aluminum Reduction Production)

Plant Code	Percent Recycle	Production Normalized Discharge Flow
34	0	5041
35	NR	5337
36	0	9089
37	0	9506
38	0	16590
39	0	29390
40	0	35500
41	0	52540
42	0	58370
43	0	91310
45	98	NR
46	96	NR
47	NR	NR
48	0	NR
49	0	NR
50	NR	NR
51	0	NR
52	NR	NR
53	0	NR
54	NR	NR
55	NR	NR
56	100	NR
56	NR	NR
58	NR	NR
59	0	NR
60	90	NR
61	NR	NR

TABLE V-19

WATER DISCHARGE RATES FOR
CONTINUOUS ROD CASTING CONTACT COOLING
(l/kkg of Aluminum Reduction Production)

Plant Code	Percent Recycle	Production Normalized Discharge Flow
346	NR	NR
355	99	415
362	99+	11.3

nr -- Not Reported

Table V-20

PRIMARY ALUMINUM SAMPLING DATA
CASTING CONTACT COOLING WATER
RAW WASTEWATER

Pollutant	Stream Code	Sample Type	Source	Concentrations (mg/l) Day 1	Day 2	Day 3	Average
Toxic Pollutants(a)							
4. benzene	126	1	0.026	0.013			0.013
23. chloroform	126	1	0.02	*			
66. bis(2-ethylhexyl) phthalate	126	1	0.033	0.117			0.117
67. butyl benzyl phthalate	126	1	*	0.076			0.076
77. acenaphthylene	126	1	ND	*			*
78. anthracene (b) 81. phenanthrene (b)	126	1	*	*			*
84. pyrene	126	1	*	*			*
91. chlordane	126	1	**	**			**
92. 4,4'-DDT	126	1	**	**			**
99. endrin aldehyde	126	1	**	**			**
102. alpha-BHC	126	1	**	**			**
104. gamma-BHC	126	1	**	**			**
107. PCB-1254	126	1	**	0.00526			0.00526
110. PCB-1248	126	1	**	**			**
114. antimony	126	1	<0.1	<0.1			<0.1
115. arsenic	126	1	<0.01	<0.01			<0.01
117. beryllium	126	1	<0.01	<0.001			<0.001
118. cadmium	126	1	<0.02	<0.002			<0.002
119. chromium	126	1	<0.05	0.01			0.01
120. copper	126	1	0.09	0.02			0.02
121. cyanide	126	1		1.38			1.38
122. lead	126	1	0.3	<0.02			<0.02
124. nickel	126	1	0.2	<0.005			<0.005

Table V-20 (Continued)

PRIMARY ALUMINUM SAMPLING DATA
CASTING CONTACT COOLING WATER
RAW WASTEWATER

Pollutant	Stream Code	Sample Type	Source	Concentrations (mg/l) Day 1	Day 2	Day 3	Average
Toxic Pollutants(a) (Cont.)							
125. selenium	126	1	<0.01	<0.01			<0.01
126. silver	126	1	<0.02	<0.02			<0.02
127. thallium	126	1	<0.1	<0.1			<0.1
128. zinc	126	1	<0.6	<0.06			<0.06
Nonconventionals							
aluminum	126	1	1.0	0.3			0.3
calcium	126	1	<50	44.0			44.0
chemical oxygen demand (COD)	126	1		44.0			44.0
iron	126	1	3.0	1.0			1.0
magnesium	126	1	5.0	10.0			10.0
manganese	126	1	0.3	0.1			0.1
phenols (total; by 4-AAP method)	126	1		0.143			0.143
total organic carbon (TOC)	126	1		20			20
Conventionals							
oil and grease	126	1		4			4
total suspended solids (TSS)	126	1		44			44
pH (standard units)	126	1	8.7	7.2			

(a) No acid fraction organic pollutants were analyzed.
(b) Reported together.

Table V-21

PRIMARY ALUMINUM SAMPLING DATA
MISCELLANEOUS WASTEWATER

Pollutant(a)	Stream Code	Sample Type	Concentrations (mg/l, except as noted) Source	Day 1	Day 2	Day 3	Average
Toxic Pollutants							
1. acenaphthene	124	7	*	ND			
	140	2	*	0.091	0.033	0.35	0.16
	143	3	*	ND	*	*	*
	192	2	ND	*			
4. benzene	124	1	0.03	ND	ND	ND	
	149	1	ND	ND	ND	ND	
	192	2	ND	ND			
23. chloroform	124	1	0.018	*	*	*	*
	149	1	ND	*	*	ND	*
	192	2	ND	ND			
39. fluoranthene	124	7	*	*			*
	140	2	*	5	1.7	15	7.2
	143	3	*	0.53	0.077	1.5	0.70
	192	2	*	0.05			0.05
44. methylene chloride	124	1	ND	*	ND	ND	*
	149	1	0.012	0.185	0.064	0.11	0.12
	192	2	ND	ND			
55. naphthalene	124	7	*	ND			
	140	2	ND	ND	ND	*	*
	143	3	ND	ND	ND	ND	
	192	2	ND	ND			
66. bis(2-ethylhexyl) phthalate	124	7	0.033	*			*
	140	2	*	0.1	0.37	0.04	0.2
	143	3	*	*	0.017	0.057	0.025
	192	2	0.02	0.02			0.02
67. butyl benzyl phthalate	124	7	*	ND			
	140	2	ND	ND	ND	*	*
	143	3	ND	ND	ND	0.021	0.021
	192	2	ND	ND			
68. di-n-butyl phthalate	124	7	ND	*			*
	140	2	ND	ND	*	*	*
	143	3	ND	*	ND	*	*
	192	2	ND	ND			

Table V-21 (Continued)

PRIMARY ALUMINUM SAMPLING DATA
MISCELLANEOUS WASTEWATER

Pollutant(a)	Stream Code	Sample Type	Concentrations (mg/l, except as noted) Source	Day 1	Day 2	Day 3	Average
Toxic Pollutants (Cont.)							
69. di-n-octyl phthalate	124	7	ND	ND			
	140	2	ND	0.029	ND	*	0.015
	143	3	ND	ND	ND	ND	
	192	2	ND	ND			
72. benzo(a)anthracene	124	7	ND	ND			
	140	2	ND	2.0	0.55	6.3	3.3
	143	3	ND	<2.5	0.024	0.84	0.29
	192	2	*	0.05			0.05
73. benzo(a)pyrene	124	7	ND	ND			
	140	2	ND	2.9	0.5	4.9	2.8
	143	3	ND	0.98	0.021	0.49	0.50
	192	2	*	0.06			0.06
74. 3,4-benzofluoranthene	124	7	ND	ND			
	140(b)	2	*	3.4	0.53	6.5	3.5
	143(c)	3	*	0.85	0.023	0.57	0.48
	192	2	ND	ND			
75. benzo(k)fluoranthene	124	7	ND	ND			
	140(b)	2	*	3.4	0.53	6.5	3.5
	143(c)	3	*	0.85	0.023	0.57	0.48
	192	2	*	0.07			0.07
76. chrysene	124	7	*	*			*
	140	2	ND	6	1.1	11	6
	143	3	ND	<2.5	0.039	1.4	0.48
	192	2	ND	0.05			0.05
77. acenaphthylene	124	7	ND	*			*
	140	2	ND	ND	ND	ND	
	143	3	ND	ND	ND	ND	
	192	2	ND	ND			
78. anthracene (d)	124	7	<0.016	0.015			<0.015
81. phenanthrene (d)	140	2	*	0.28	0.052	1.80	0.71
	143	3	*	0.013	ND	0.20	0.11
	192	2	*	*			*
79. benzo(ghi)perylene	124	7	ND	ND			
	140	2	ND	0.82	ND	2	1.4
	143	3	ND	0.026	ND	0.17	0.098
	192	2	ND	*			*

Table V-21 (Continued)

PRIMARY ALUMINUM SAMPLING DATA
MISCELLANEOUS WASTEWATER

Pollutant(a)	Stream Code	Sample Type	Concentrations (mg/l, except as noted) Source	Day 1	Day 2	Day 3	Average
Toxic Pollutants (Cont.)							
80. fluorene	124	7	ND	ND			
	140	2	ND	ND	ND	0.051	0.051
	143	3	ND	ND	ND	*	*
	192	2	ND	*			*
82. dibenzo(a,h)anthracene	124	7	ND	ND			
	140	2	ND	ND	ND	0.34	0.34
	143	3	ND	0.05	ND	0.047	0.049
	192	2	ND	ND			
83. indeno(1,2,3-cd)pyrene	124	7	ND	ND			
	140	2	ND	0.87	ND	1.80	1.3
	143	3	ND	0.086	ND	0.067	0.077
	192	2	ND	*			*
84. pyrene	124	7	*	*			*
	140	2	*	5.3	1.7	14	7.0
	143	3	*	0.065	0.073	1.6	0.58
	192	2	*	0.04			0.04
114. antimony	124	7	<0.1	<0.1			<0.1
	140	2	<0.005	0.53	2	1.3	1.3
	143	3	<0.005	0.1	0.05	0.04	0.06
	149	1		0.0005	0.0005	0.0005	0.0002
	192	2	0.024	0.024			0.024
115. arsenic	124	7	<0.01	0.05			0.05
	140	2	<0.001	2.3	1.8	0.62	1.6
	143	3	<0.001	0.3	0.19	0.3	0.3
	149	1		0.023	0.015	0.019	0.019
	192	2	<0.01	<0.01			<0.01
117. beryllium	124	7	<0.01	0.08			0.08
	140	2	<0.0005	0.03	0.03	0.05	0.04
	143	3	<0.0005	<0.0005	0.002	0.014	0.005
	149	1		0.003	0.0006	0.001	0.002
	192	2	<0.001	<0.001			<0.001
118. cadmium	124	7	<0.02	0.1			0.1
	140	2	<0.001	0.09	0.08	0.09	0.09
	143	3	<0.001	0.03	<0.001	<0.001	0.01
	149	1		0.007	<0.002	<0.002	<0.004
	192	2	0.001	0.005			0.005

Table V-21 (Continued)

PRIMARY ALUMINUM SAMPLING DATA
MISCELLANEOUS WASTEWATER

Pollutant(a)	Stream Code	Sample Type	Concentrations (mg/l, except as noted) Source	Day 1	Day 2	Day 3	Average
Toxic Pollutants (Cont.)							
119. chromium	124	7	<0.05	0.2			0.2
	140	2	0.008	0.006	0.01	0.022	0.01
	143	3	0.008	0.006	0.016	0.023	0.02
	149	1		0.02	<0.004	0.004	0.009
	192	2	<0.004	<0.004			<0.004
120. copper	124	7	0.09	0.2			0.02
	140	2	0.029	0.09	0.09	0.11	0.1
	143	3	0.029	1.3	0.35	1	0.9
	149	1		0.062	0.032	0.046	0.047
	192	2	0.005	0.008			0.008
121. cyanide	124	7		98.6	128	127	118
	140	2	0.14	180	170	160	170
	143	3	0.14	26	36	68	43
	149	1	<0.01	54			54
	192	2	<0.004	<0.004			<0.004
122. lead	124	7	0.3	3			3
	140	2	0.01	0.32	0.36	0.6	0.4
	143	3	0.01	0.01	0.3	0.13	0.1
	149	1		0.02	0.014	0.01	0.01
	192	2	<0.022	0.05			0.05
123. mercury	124	7	0.0001	0.0001			0.0001
	140	2	0.0002	0.0004	<0.0002	<0.0002	0.0001
	143	3	0.0002	0.0003	0.0004	0.0003	0.0003
	149	1		0.003	0.001	0.0007	0.001
	192	2	<0.002	<0.002			<0.002
124. nickel	124	7	0.2	1			1
	140	2	0.012	0.32	0.37	0.55	0.41
	143	3	0.012	0.49	0.26	0.47	0.41
	149	1		0.05	0.03	0.04	0.04
	192	2	0.008	<0.005			<0.005
125. selenium	124	7	<0.01	0.01			0.01
	140	2	0.25	1.2	1	1.3	1.2
	143	3	0.25	40	0.05	0.044	13
	149	1		0.002	0.001	0.001	0.002
	192	2	<0.001	<0.001			<0.001

Table V-21 (Continued)

PRIMARY ALUMINUM SAMPLING DATA
MISCELLANEOUS WASTEWATER

Pollutant(a)	Stream Code	Sample Type	Concentrations (mg/l, except as noted) Source	Day 1	Day 2	Day 3	Average
Toxic Pollutants (Cont.)							
126. silver	124	7	<0.02	0.04			0.04
	140	2	0.0005	0.5	0.38	0.3	0.04
	143	3	0.0005	0.077	0.02	0.098	0.07
	149	1		<0.002	<0.002	<0.002	<0.002
	192	2	<0.002	<0.002			<0.002
127. thallium	124	7	<0.1	<0.1			<0.1
	140	2	<0.001	0.63	0.6	0.73	0.7
	143	3	<0.001	<0.005	<0.001	<0.005	<0.004
	149	1		<0.0005	<0.0005	<0.0005	<0.0005
	192	2	<0.05	<0.001			<0.001
128. zinc	124	7	<0.6	<0.6			<0.6
	140	2	0.02	0.09	0.08	0.11	0.09
	143	3	0.02	0.03	0.02	0.03	0.03
	149	1		0.092	0.036	0.056	0.061
	192	2	0.032	0.04			0.04
Nonconventional Pollutants							
aluminum	124	1	1	1,000			1,000
ammonia	124	1		38	51	53	47
	140	2	0.44	5.6	9.8	6.3	7.2
	143	3	0.44	3.4	9.8	11	8.1
	149	1		ND	ND	ND	
chemical oxygen demand (COD)	124	7		813			813
	140	2		920	1,400	500	940
	143	3		400	220	300	300
	149	1			18	15	16.5
fluoride	124	7		950			950
	140	2		550	830	570	650
	143	3		830	200	420	480
	149	1			8		8
phenols (total; by 4-AAP method)	124	1		0.035	0.031	0.015	0.027
	140	2	0.014	0.40	0.27	0.55	0.41
	143	2	0.014	0.009	0.21	0.088	0.10
	149	1	<0.001	0.01	<0.001		0.005
	192	2	<0.005	102			102

Table V-21 (Continued)

PRIMARY ALUMINUM SAMPLING DATA
MISCELLANEOUS WASTEWATER

Pollutant(a)	Stream Code	Sample Type	Concentrations (mg/l, except as noted) Source	Day 1	Day 2	Day 3	Average
Nonconventional Pollutants (Cont.)							
total organic carbon (TOC)	124	7		132			132
	140	2		430	1,000	2,000	1,100
	143	3		160	130	110	130
Conventional Pollutants							
oil and grease	124	1		3	2		2.5
	140	2	<1	3.6	5.5	9,600	3,200
	143	1	<1	<1	13	15,000	5,000
total suspended solids (TSS)	124	7		251			251
	140	2		620	460	3,200	1,400
	143	3		260	27	130	140
	149	1		36	19	50	35
pH (standard units)	124	1	8.7	12	13	12.3	
	140	1	5	10	11		
	143	1	5	10	10		
	149	1			8.4	8.5	

(a) No samples were analyzed for the acid extractable toxic organic pollutants. Four samples from two streams were analyzed for the pesticide fraction; none was reported present above its analytical quantification level.

(b),(c) Reported together.

Table V-22

PRIMARY ALUMINUM SAMPLING DATA
TREATMENT PLANT SAMPLES - PLANT A

Pollutant	Stream Code	Sample Type	Source	Concentrations (mg/l) Day 1	Day 2	Day 3	Average
Toxic Pollutants(a)							
1. acenaphthene	193	4	ND	0.010			0.010
39. fluoranthene	193	4	*	0.080			0.080
44. methylene chloride	193	4	*	ND			
66. bis(2-ethylhexyl) phthalate	193	4	0.020	0.010			0.010
72. benzo(a)anthracene	193	4	*	*			*
73. benzo(a)pyrene	193	4	*	0.010			0.010
75. benzo(k)fluoranthene	193	4	*	*			*
76. chrysene	193	4	ND	*			*
77. acenaphthylene	193	4	ND	*			*
78. anthracene	193	4	*	*			*
79. benzo(ghi) pyrylene	193	4	ND	*			*
80. fluorene	193	4	ND	*			*
83. indeno(1,2,3-cd) pyrene	193	4	ND	*			*
84. pyrene	193	4	*	0.040			0.040
86. toluene	193	4	*	ND			
114. antimony	193	4	0.030	0.040			0.040
115. arsenic	193	4	<0.010	<0.010			<0.010
117. beryllium	193	4	<0.001	<0.001			<0.001
118. cadmium	193	4	0.0018	0.0066			0.0066
119. chromium	193	4	<0.004	<0.004			<0.004
120. copper	193	4	0.0066	0.0061			0.0061
121. cyanide	193	4	<0.004	<0.004			<0.004
122. lead	193	4	<0.022	0.059			0.059
123. mercury	193	4	<0.002	<0.002			<0.002
124. nickel	193	4	0.042	0.120			0.005
125. selenium	193	4	<0.001	<0.001			<0.001
126. silver	193	4	<0.002	<0.002			<0.002
127. thallium	193	4	<0.050	<0.001			<0.001
128. zinc	193	4	0.032	0.058			0.058
Nonconventional							
phenols (total; by 4-AAP method)	193	4	<0.005	0.116			0.116

(a) Stream 193 was not analyzed for the pesticide fraction organic toxic pollutants.

Table V-23

PRIMARY ALUMINUM SAMPLING DATA
TREATMENT PLANT SAMPLES - PLANT B

	Pollutant	Stream Code	Sample Type	Source	Concentrations (mg/l) Day 1	Day 2	Day 3	Average
Toxic Pollutant								
1.	acenaphthene	125	7	*	*	ND	ND	*
4.	benzene	125	7	0.026	ND	0.044	ND	0.044
23.	chloroform	125	7	0.020	*	0.014	*	0.0047
39.	fluoranthene	125	7	*	*	ND	ND	*
44.	methylene chloride	125	7	ND	*	ND	ND	*
66.	bis(2-ethylhexyl) phthalate	125	7	0.033	0.069			0.069
67.	butyl benzyl phthalate	125	7	*	ND			
68.	di-n-butyl phthalate	125	7	ND	0.032			0.032
70.	dimethyl phthalate	125	7	*	*			*
77.	acenaphthylene	125	7	ND	*			*
78.	anthracene (a)	125	7	0.016	0.027			0.027
81.	phenanthrene (a)							*
80.	fluorene	125	7	ND	*			*
84.	pyrene	125	7	*	*			*
90.	dieldrin	125	7	**	ND			
91.	chlordane	125	7	**	**			**
92.	4,4'-DDT	125	7	**	**			**
93.	4,4'-DDE	125	7	**	**			**
99.	endrin aldehyde	125	7	**	ND			
100.	heptachlor	125	7	**	**			**
101.	heptachlor epoxide	125	7	**	**			**
103.	beta-BHC	125	7	**	**			**
104.	gamma-BHC	125	7	ND	**			**
107.	PCB-1254	125	7	**	**			**
110.	PCB-1248	125	7	**	**			**
114.	antimony	125	7	<0.100	<0.100			<0.100
115.	arsenic	125	7	<0.010	<0.010			<0.010
117.	beryllium	125	7	<0.010	<0.001			<0.001
118.	cadmium	125	7	<0.02	0.003			0.003
119.	chromium	125	7	<0.05	0.008			0.008
120.	copper	125	7	0.09	0.1			0.1
121.	cyanide	125	7		10.10	4.97	7.46	7.51
122.	lead	125	7	0.300	0.040			0.040
124.	nickel	125	7	0.200	0.040			0.040
125.	selenium	125	7	<0.01	<0.01			<0.01
126.	silver	125	7	<0.020	<0.020			<0.020
127.	thallium	125	7	<0.100	<0.100			<0.100
128.	zinc	125	7	<0.600	<0.060			<0.060

Table V-23 (Continued)

PRIMARY ALUMINUM SAMPLING DATA
TREATMENT PLANT SAMPLES - PLANT B

Pollutant	Stream Code	Sample Type	Source	Concentrations (mg/l) Day 1	Day 2	Day 3	Average
Nonconventional							
aluminum	125	7	1	20			20
ammonia	125	7	1	8.1	14	14	12
calcium	125	7	<50	170			170
chemical oxygen demand (COD)	125	7		18			
fluoride	125	7		68			68
magnesium	125	7	5	12			12
phenols (total; by 4-AAP Method)	125	1		0.004	0.007	0.008	0.006
total organic carbon (TOC)	125	7		16			16
Conventional							
oil & grease	125	1		<1	7		4
total suspended solids (TSS)	125	7		218			218
pH (standard units)	125	1	8.7	11.5	6.3	8.2	

(a) Reported together

Table V-24

PRIMARY ALUMINUM SAMPLING DATA
TREATMENT PLANT SAMPLES - PLANT C

Pollutant	Stream Code	Sample Type	Source	Concentrations (mg/l) Day 1	Day 2	Day 3	Average
Toxic Pollutants							
1. acenphthene	93	3	ND	0.010	0.012	0.013	0.012
4. benzene	93	1	*	ND	*	*	*
23. chloroform	93	1	*	*	*	0.011	*
28. 3,3'dichlorobenzidine	93	3	*	ND	ND	ND	
35. 2,4-dinitrotoluene (a)	93	3	ND	ND	*	*	*
36. 2,6 dinitrotoluene (a)							
39. fluoranthene	93	3	*	0.034	0.011	0.013	0.019
55. naphthalene	93	3	ND	ND	ND	*	*
66. bis(2-ethylhexyl) phthalate	93	3	0.011	*	0.010	*	0.003
67. butyl benzyl phthalate	93	3	*	*	*	*	
68. di-n-butyl phthalate	93	3	0.031	*	0.024	0.025	0.016
69. di-n-octyl phthalate	93	3	ND	0.013	*	ND	0.007
70. diethyl phthalate	93	3	ND	ND	*	ND	*
71. dimethyl phthalate	93	3	ND	ND	*	*	*
73. benzo(a) pyrene	93	3	ND	*	*	*	*
74. benzo(b) fluoranthene	93	3	ND	ND	*	ND	*
75. benzo(k) fluroanthene	93	3	ND	ND	*	ND	*
76. chrysene	93	3	*	*	*	*	
78. anthracene (b)	93	3	*	ND	*	*	*
81. phenanthrene (b)							
79. benzo(ghi) perylene	93	3	ND	*	ND	ND	*
80. fluorene	93	3	ND	*	ND	*	*
82. dibenzo (a,h) anthracene	93	3	ND	*	ND	ND	*
83. indeno (1,2,3-c,d) pyrene	93	3	*	*	ND	ND	*
84. pyrene	93	3	*	0.032	*	0.010	0.014
85. tetrachlorethylene	93	3	*	ND	*	ND	*
87. trichloroethylene	93	3	ND	ND	*	ND	*
89. aldrin	93	3	**	ND	**	**	**
90. dieldrin	93	3	ND	ND	**	ND	**
91. chlordane	93	3	**	**	**	**	**
92. 4,4'-DDT	93	3	**	**	**	**	**
93. 4,4'-DDE	93	3	**	**	ND	**	**
99. endrin aldehyde	93	3	**	**	ND	**	**
100. heptachlor	93	3	**	**	ND	**	**
101. heptachlor epoxide	93	3	ND	ND	**	ND	**
103. beta-BHC	93	3	**	**	ND	**	**
104. gamma-BHC	93	3	ND	**	ND	ND	**
105. delta-BHC	93	3	**	ND	**	**	**
106. PCB-1242 (c)	93	3	**	**	**	**	**
107. PCB-1254 (c)							
108. PCB-1221 (c)							
109. PCB-1232 (d)	93	3	**	**	**	**	**

Table V-24 (Continued)

PRIMARY ALUMINUM SAMPLING DATA
TREATMENT PLANT SAMPLES - PLANT C

Pollutant	Stream Code	Sample Type	Source	Concentrations (mg/l) Day 1	Day 2	Day 3	Average
Toxic Pollutants							
110. PCB-1248 (d)							
111. PCB-1260 (d)							
112. PCB-1016 (d)							
114. antimony	93	3	<0.10	<0.10	<0.10	<0.10	<0.10
115. arsenic	93	3	<0.01	<0.01	<0.01	<0.01	<0.01
117. beryllium	93	3	<0.001	<0.001	<0.001	<0.001	<0.001
118. cadmium	93	3	<0.002	<0.002	0.008	<0.002	0.003
119. chromium	93	3	<0.005	<0.005	0.020	0.020	0.01
120. copper	93	3	0.009	<0.006	0.007	<0.006	<0.006
121. cyanide	93	1		0.246	0.214	0.223	0.228
122. lead	93	3	<0.020	<0.020	<0.020	<0.020	<0.020
123. mercury	93	3	0.0001	0.0001	0.002	0.0001	0.0007
124. nickel	93	3	<0.005	<0.005	<0.005	<0.005	<0.005
125. selenium	93	3	<0.01	<0.01	<0.01	<0.01	<0.01
126. silver	93	3	<0.02	<0.02	<0.02	<0.02	<0.02
127. thallium	93	3	<0.1	<0.1	<0.1	<0.1	<0.1
128. zinc	93	3	<0.060	<0.060	<0.060	<0.060	<0.060
Nonconventional							
aluminum	93	3	0.100	2.000	2.000	2.000	2.000
calcium	93	3	13.0	15.0	10.0	10.0	11.7
chemical oxygen demand (COD)	93	3		28	22	22	24
fluoride	93	3		7.8	9.4	7.4	8.2
magnesium	93	3	3.3	3.2	2.9	3.1	3.07
phenols (total; by 4-AAP Method)	93	1		0.017	0.013	0.012	0.014
total organic carbon (TOC)	93	3		10	7	7	8
Conventional							
oil & grease	93	1			2	3.0	2.5
total suspended solids (TSS)	93	3		32	14	9	18.3
pH				6.8	6.7		

(a), (b), (c), (d) Reported together

Table V-25

PRIMARY ALUMINUM SAMPLING DATA
TREATMENT PLANT SAMPLES - PLANT D

Pollutant	Stream Code	Sample Type	Source	Concentrations (mg/l) Day 1	Day 2	Day 3	Average
Toxic Pollutants							
39. fluoranthene	27	3		0.060	ND		0.060
66. bis(1-ethylhexyl) phthalate	27	3		ND	*		*
68. di-n-butyl phthalate	27	3		ND	*		*
76. chrysene	27	3		0.140			0.140
84. pyrene	27	3		0.080	ND		0.080
85. tetrachloroethylene	27	1		0.122			0.122
86. toluene	27	1		0.017			0.017
87. trichloroethylene	27	1		0.135			0.135
89. aldrin (b)	27	3		**			**
90. dieldrin (b)							
91. chlordane				**			**
92. 4,4'-DDT (b)							
93. 4,4'-DDE (b)							
94. 4,4'-DDD (b)							
95. alpha-endosulfan (b)							
96. beta-endosulfan (b)							
97. endosulfan sulfate (b)							
98. endrin (b)							
99. endrin aldehyde (b)							
100. heptachlor (b)							
101. heptachlor epoxide (b)							
102. alpha-BHC (b)							
103. beta-BHC (b)							
104. gamma-BHC (b)							
105. delta-BHC (b)							
106. PCB-1242 (c)	27	3		<0.015			<0.015
107. PCB-1254 (c)							
108. PCB-1221 (c)							
109. PCB-1232 (d)	27	3		<0.015			<0.015
110. PCB-1248 (d)							
111. PCB-1260 (d)							
112. PCB-1016 (d)							
113. toxaphene				**			**
114. antimony				0.01	1.1	0.006	0.372
115. arsenic	27	3		<0.002	0.1	<0.002	0.03
116. asbestos (MFL)	27			1.2 (MFL)			1.2(MFL)
117. beryllium	27	3		<0.020	<0.002	<0.002	<0.008
118. cadmium	27	3		<0.200	<0.020	<0.020	<0.080
119. chromium	27	3		<0.240	0.039	<0.024	0.013
120. copper	27	3		0.050	0.015	0.008	0.024
121. cyanide	27	3		0.005	0.004	0.004	0.0043

Table V-25 (Continued)

PRIMARY ALUMINUM SAMPLING DATA
TREATMENT PLANT SAMPLES - PLANT D

Pollutant	Stream Code	Sample Type	Source	Concentrations (mg/l) Day 1	Day 2	Day 3	Average
Toxic Pollutants							
122. lead	27	3		<0.600	0.124	<0.060	0.04
123. mercury	27	3		0.0001	0.0002	0.0002	0.0002
124. nickel	27	3		<0.500	0.060	<0.050	0.02
125. selenium	27	3		0.035	0.025	0.008	0.023
126. silver	27	3		<0.250	<0.025	<0.025	<0.100
127. thallium	27	3		<0.050	<0.050	<0.050	<0.050
128. zinc	27	3		0.560	0.118	2.000	0.893
Nonconventional							
aluminum	27	3		2.0	3.0	4.0	3.0
calcium	27	3		29.0	43.8	46.5	39.8
chemical oxygen demand (COD)	27	3		131	170	75	125.3
fluoride	27	3		2.4	1.9	3.0	2.43
magnesium	27	3		8.0	7.3	7.5	7.6
phenols (total; by 4-AAP Method)	27	1		0.083	0.054	0.047	0.061
total organic carbon (TOC)	27	3		63	41	27	43.7
Conventional							
oil & grease	27	1		10	20	1	10.3
total suspended solids (TSS)	27	3		100	80	59	79.7
pH (standard units)	27	1		7.3	8.0	7.6	

Table V-26

PRIMARY ALUMINUM SAMPLING DATA
TREATMENT PLANT SAMPLES - PLANT E

Pollutant(a)	Stream Code	Sample Type	Source	Concentrations (mg/l) Day 1	Day 2	Day 3	Average
Toxic Pollutants							
1. acenaphthene	141	3	*	0.42	*	0.3	0.24
34. 2,4-dimenyl-phenol	141	3	ND	ND	ND	0.28	0.28
35. 2,4-dinitrotoluene	141	3	ND	0.2	ND	ND	0.2
39. fluoranthene	141	3	*	22.3	0.75	12	12
62. N-nitrosodiphenylamine	141	3	ND	ND	ND	0.014	0.014
66. bis(2-ethylhexyl) phthalate	141	3	*	3.1	ND	0.031	1.6
67. butyl benzyl phthalate	141	3	ND	ND	ND	0.012	0.012
72. benzo(a)anthracene	141	3	ND	10	0.24	11	7
73. benzo(a)pyrene	141	3	ND	10	0.24	5.70	5.3
74. benzo(b) fluoranthene (b)	141	3	*	<11	0.23	5.7	5.64
75. benzo(k)fluoranthene (b)							
76. chrysene	141	3	ND	23	0.43	18	14
77. acenaphthylene	141	3	ND	0.02	ND	0.019	0.020
78. anthracene (c)	141	3	*	0.5	ND	0.65	0.6
81. phenanthrene (c)	141						
79. benzo(ghi)perylene	141	3	ND.	3	ND	ND	3
80. fluorene	141	3	ND	0.017	ND	1.1	0.558
82. dibenzo(a,h)anthracene	141	3	ND	2	ND	2.9	2.5
83. indeno (1,2,3-cd)pyrene	141	3	ND	2.1	ND	0.65	1.4
84. pyrene	141	3	*	23	0.80	12.5	12
114. antimony	141	3	<0.005	0.84	0.50	1	0.78
	148	1		<0.0005			<0.0005
115. arsenic	141	3	<0.001	1.8	1.9	0.64	1.4
	148	1		0.1243			0.1243
117. beryllium	141	3	<0.0005	0.060	0.030	0.060	0.050
	148	1		0.0448			0.0448
118. cadmium	141	3	<0.001	0.08	0.080	0.10	0.09
	148	1		0.004			0.004
119. chromium	141	3	0.008	0.023	0.080	0.018	0.04
	148	1		0.1			0.1
120. copper	141	3	0.029	0.12	0.080	0.11	0.1
	148	1		0.744			0.744
121. cyanide	141	1	0.14	200	160	160	173
	148	1	<0.01	82			82
122. lead	141	3	0.01	0.45	0.35	0.59	0.46
	148	1		0.21			0.21
123. mercury	141	3	0.0002	<0.0002	<0.0002	<0.0002	<0.0002
	148	1		0.0213			0.0213

Table V-26 (Continued)

PRIMARY ALUMINUM SAMPLING DATA
TREATMENT PLANT SAMPLES - PLANT E

Pollutant(a)	Stream Code	Sample Type	Source	Concentrations (mg/l) Day 1	Day 2	Day 3	Average
Toxic Pollutants (Cont.)							
124. nickel	141	3	0.012	0.45	0.37	0.56	0.46
	148	1		0.122			0.122
125. selenium	141	3	0.250	3.0	1.1	1.2	1.8
	148	1		0.030			0.030
126. silver	141	3	0.005	0.40	0.70	0.62	0.60
	148	1		<0.002			<0.002
127. thallium	141	3	<0.001	0.53	0.61	0.69	0.61
	148	1		<0.001			<0.001
128. zinc	141	3	0.02	0.10	0.08	0.12	0.10
	148	1		0.056			0.056
Conventional							
oil & grease	141	1	<1	1,500	42	1,300	947
total suspended solids (TSS)	141	3		2,000	150	3,900	2,017
pH	141	1	5	9	11		
Nonconventional							
ammonia	141	3	0.44	2.0	13	7.9	7.6
chemical oxygen demand (COD)	141	3		1,800	1,100	2,300	1,730
fluoride	141	3		630	870	670	720
total organic carbon (TOC)	141	3		630	1,400	2,300	1,440
phenols (total; by 4-AAP method)	141	3	0.014	0.36	0.50	0.47	0.44
	148	1	<0.001	0.090			0.090

(a) Stream 141 was not analyzed for the volatile or pesticide fractions of toxic organic pollutants. Stream 143 was not analyzed for any toxic organic pollutant and only total phenols of the nonconventional pollutants.

(b), (c) Reported together

Table V-27

PRIMARY ALUMINUM SAMPLING DATA
TREATMENT PLANT SAMPLES - PLANT F

	Pollutant(a)	Stream Code	Sample Type	Concentrations (mg/l, except as noted) Source	Day 1	Day 2	Day 3	Average
Toxic Pollutants								
1.	acenaphthene	136	3	ND	0.025	ND	0.027	0.026
37.	1,2-diphenylhydrazine	136	3	ND	ND	ND	0.019	0.019
39.	fluoranthene	136	3	*	13	11	10	11
55.	naphthalene	136	3	ND	*	ND	0.031	0.16
66.	bis(2-ethylhexyl) phthalate	136	3	*	0.094	ND	0.080	0.087
67.	butyl benzyl phthalate	136	3	*	ND	ND	0.022	0.022
68.	di-n-butyl phthalate	136	3	ND	ND	ND	0.013	0.013
69.	di-n-octyl phthalate	136	3	*	0.018	ND	0.017	0.18
72.	benzo(a)anthracene	136	3	ND	4.3	ND	6.5	5.4
73.	benzo(a)pyrene	136	3	ND	ND	3	4.2	3.6
74.	3,4-benzofluoranthene	136	3	ND	ND	1	4.4	2.7
75.	benzo(k)fluoranthene	136	3	ND	ND	ND	4.4	4.4
76.	chrysene	136	3	ND	7.5	3	10	6.8
78. 81.	anthracene (b) phenanthrene (b)	136	3	*	<7.8	<6.8	<5.3	<6.63
79.	benzo(ghi)perylene	136	3	ND	ND	ND	0.920	0.920
80.	fluorene	136	3	ND	ND	0.083	0.11	0.097
82.	dibenzo(a,h)anthracene	136	3	ND	ND	ND	0.8	0.8
83.	indeno(1,2,3-cd)pyrene	136	3	ND	1.2	ND	0.7	0.95
84.	pyrene	136	3	ND	14	12	12	13
114.	antimony	136	3	<0.005	0.38	0.48	0.40	0.42
115.	arsenic	136	3	<0.001	0.16	0.10	0.11	0.12

Table V-27 (Continued)

PRIMARY ALUMINUM SAMPLING DATA
TREATMENT PLANT SAMPLES - PLANT F

Pollutant(a)	Stream Code	Sample Type	Concentrations (mg/l, except as noted) Source	Day 1	Day 2	Day 3	Average
Toxic Pollutants (Cont.)							
117. beryllium	136	3	<0.0005	0.02	0.03	0.03	0.03
118. cadmium	136	3	<0.001	0.05	0.05	0.05	0.05
119. chromium	136	3	0.011	0.028	0.028	0.014	0.023
120. copper	136	3	0.041	0.08	0.06	0.07	0.07
121. cyanide	136	1		1.3	1.4	1.5	1.4
122. lead	136	3	0.17	0.12	0.4	0.27	0.26
123. mercury	136	3	<0.0002	<0.0002	<0.0002	<0.0002	<0.0002
124. nickel	136	3	<0.005	0.26	0.22	0.21	0.23
125. selenium	136	3	<0.008	0.16	0.008	<0.008	<0.06
126. silver	136	3	<0.001	0.011	0.006	0.003	0.007
127. thallium	136	3	<0.001	0.31	0.35	0.39	0.35
128. zinc	136	3	0.04	0.20	0.14	0.17	0.17
Nonconventional Pollutants							
ammonia	136	1		3.3	0.2	3.4	2.3
chemical oxygen demand (COD)	136	3		1,200	1,200	1,200	1,200
fluoride	136	3		2,000	1,900	2,000	1,967
phenols (total; by 4-AAP method)	136	1		<0.001	<0.001	<0.001	<0.001
total organic carbon (TOC)	136	3		570	1,300	460	780
Conventional Pollutants							
oil and grease	136	1		13	18	14	15
total suspended solids (TSS)	136	3		140	140	160	146
pH (standard units)	136	1		5	7.7	8	8

(a) No samples were analyzed for the acid, pesticide, or volatile toxic organic fractions.

(b) Reported together.

TABLE V-28

REPORTED PRESENCE OR ABSENCE OF TOXIC POLLUTANTS
(From Dcp Responses)

Pollutant	Known Present	Believed Present	Believed Absent	Known Absent
Acenaphthene	0	4	20	3
Fluoranthene	0	6	19	2
1,2-benzanthracene	0	8	19	0
Benzo(a)pyrene	0	8	19	0
Chrysene	1	7	20	0
Pyrene	0	8	19	0
3,4-benzofluoranthene	0	5	22	0
Benzo(k)fluoranthene	0	5	22	0
Acenaphthylene	0	5	21	1
Anthracene	0	9	19	0
Benzo(ghi)perylene	0	5	22	0
Fluorene	2	8	18	0
Phenanthrene	0	9	19	0
Dibenzo(a,h)anthracene	0	4	23	0
Indeno(1,2,3-cd)pyrene	0	4	23	0
Methyl bromide	0	1	26	1
Naphthalene	0	6	21	1
Pentachlorophenol	0	1	27	0
Tetrachloroethylene	0	0	27	1
Toluene	0	1	27	0
Antimony	0	2	21	4
Arsenic	3	3	17	4
Cadmium	5	2	16	4
Chromium	6	3	16	2
Copper	7	5	14	1
Cyanide	16	4	5	0
Lead	1	5	19	2
Mercury	1	3	21	2
Nickel	1	3	23	0
Selenium	1	1	22	3
Silver	1	3	22	1
Thallium	0	0	24	2
Zinc	8	3	16	-

Table V-29

SOURCE WATER CHARACTERISTICS

Parameter	Concentration(mg/l)
Sb	0.015
CN (T)	<0.01
Ni	<0.1
TSS	2.
O & G	<1
pH (std units)	6.95
Aluminum	<0.1
Calcium	50
Chloride	36
Fluoride	0.34
Iron	0.80
Total Dissolved Solids	273
Alkalinity (as $CaCO_3$)	198

Table V-30

RAW WASTEWATER CHARACTERISTICS -- POTLINE SCRUBBER BLOWDOWN

Parameter	No. Values	Concentration (mg/l) Average	Range
Sb	10	4.68	1.13 - 10.0
CN (T)	10	38.9	27.4 - 47.5
Ni	10	1.0	0.70 - 1.40
TSS	10	130	75 - 238
O & G	5	9	6 - 14
pH (std units)			8.0 - 9.42
Aluminum	10	24	20 - 27
Calcium	9	3.7	1.5 - 9
Chloride	9	1275	1200 - 1400
Fluoride	10	874	237 - 1260
Iron	9	12.1	9.5 - 16
Total Dissolved Solids (Percent)	10	6.18	5.02 - 6.74
Alkalinity (as $CaCO_3$)	9	5300	4900 - 7300
Turbidity (NTU)	10	3.8	3.2 - 4.6
Temperature (^{o}C)	10	34.5	33.3 - 37.2

Table V-31

CONCENTRATION OF PAH IN POTLINE WASTEWATER

PAH	Concentration (mg/l) Average	Range
Napthalene	ND	ND
Acenapthylene	ND	ND
Acenapthene	0.030	0.02 - 0.040
Fluorene	ND	ND
Phenanthrene & Anthracene	ND	ND
Fluoranthene	2.740	1.840 - 3.670
Pyrene	2.000	1.410 - 2.900
Chrysene & Benzo(a)anthracene	2.230	1.780 - 3.200
3,4-Benzofluoranthene & Benzo(k)fluoranthene	0.790	0.600 - 1.060
Benzo(a)pyrene	1.100	0.700 - 1.820
Dibenzo(a,h)anthracene	0.140	0.090 - 0.200
Indeno(1,2,3-cd)pyrene	ND	ND
Benzo(ghi)perylene	0.310	0.220 - 0.440

NOTES:
ND - Not Detected (quantification limit = 0.010 mg/l)
All values reported in mg/l without correction for recovery
Analysis by Method 625.
Average derived from 9 data points.

Table V-32

SAMPLE DATA SUMMARY OF PAH ANALYSIS

Potline Scrubber Liquor

PAH	Clarifier Effluent	Filter Effluent	Act. Carbon Effluent
Naphthalene	ND	ND	ND
Acenaphthylene	ND	ND	ND
Acenaphthene	0.010	0.010	ND
Fluorene	ND	ND	ND
Phenanthrene & Anthracene	ND	ND	ND
Fluoranthene	0.170	0.114	ND
Pyrene	0.110	0.079	ND
Chrysene & Benzo(a)anthracene	0.040	0.023	ND
3,4-Benzofluoranthene & Benzo(k)fluoranthene	0.020	0.010	ND
Benzo(a)pyrene	0.020	0.010	ND
Dibenzo(a,h)anthracene	ND	ND	ND
Indeno(1,2,3-cd)pyrene	ND	ND	ND
Benzo(ghi)perylene	ND	ND	ND

NOTES:
ND - Not Detected (quantification limit = 0.010 mg/l)
All values reported in mg/l without correction for recovery
Analysis by Method 625.
Average derived from 8 clarifier data points and 9 filter effluent data points.

Table V-33

SAMPLE DATA SUMMARY OF METALS ANALYSIS
Potline Scrubber Liquor

Parameter	Clarifier Effluent	Filter Effluent
Antimony	3.3	2.99
Nickel	0.58	0.57
Aluminum	2.2	1.9
Fluoride	212	206
TSS	82	15

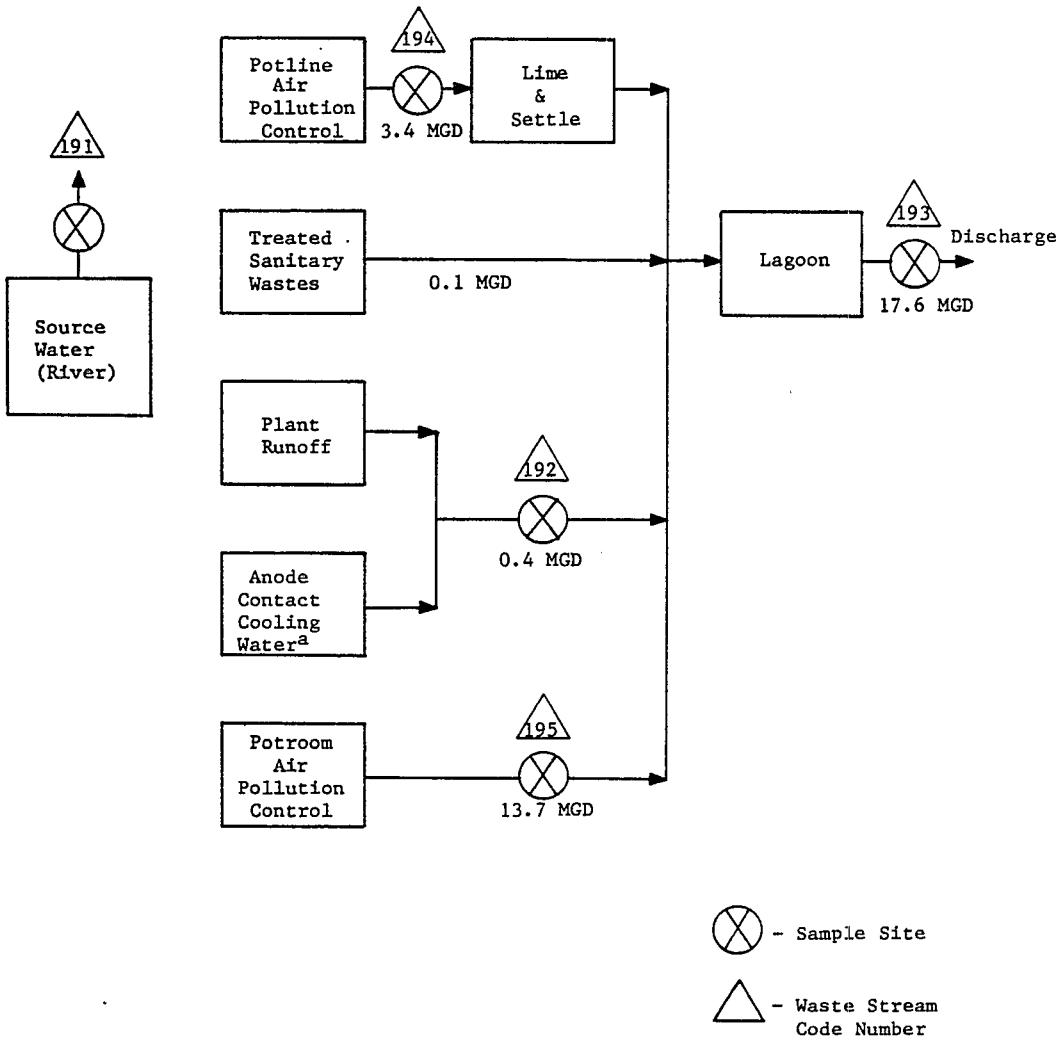

Figure V-1

SAMPLING SITES AT PRIMARY ALUMINUM PLANT A

[a]This plant uses the VSS cell configuration, however, the paste is formed into briquettes for insertion into the carbon anode.

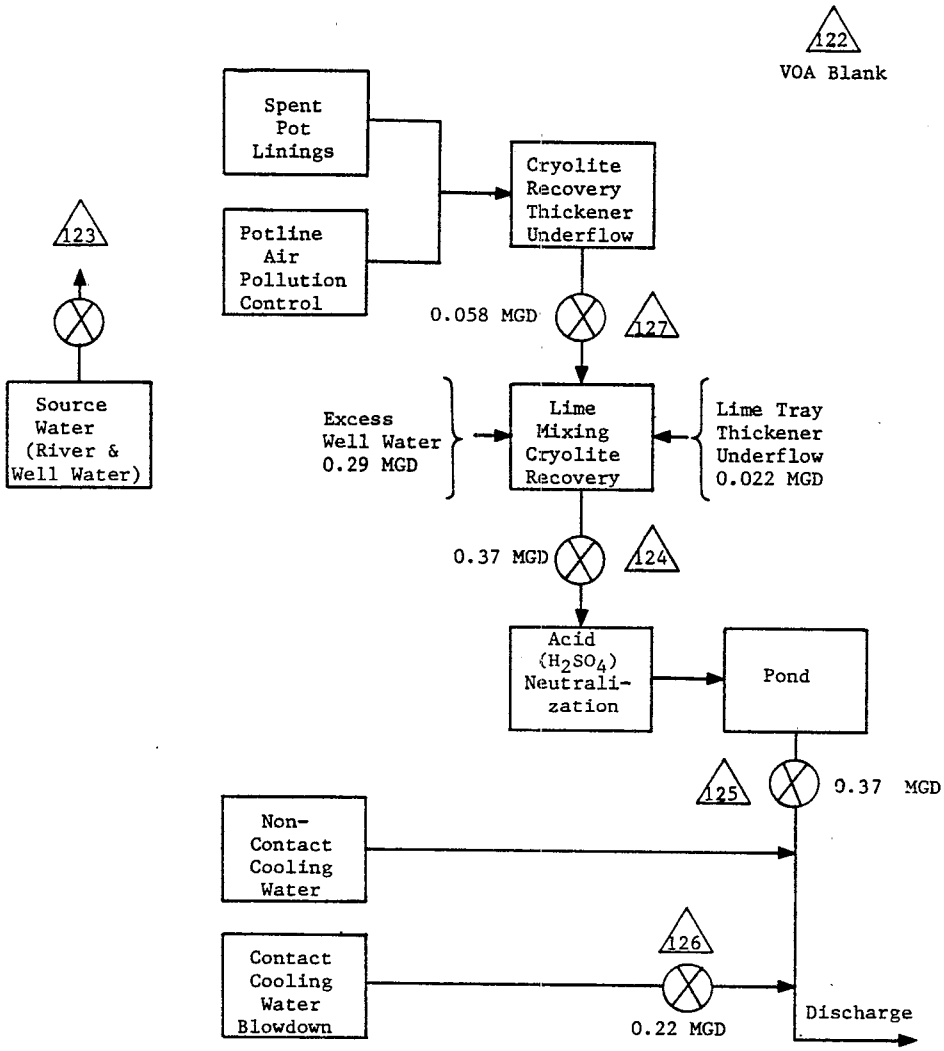

Figure V-2

SAMPLING SITES AT PRIMARY ALUMINUM PLANT B

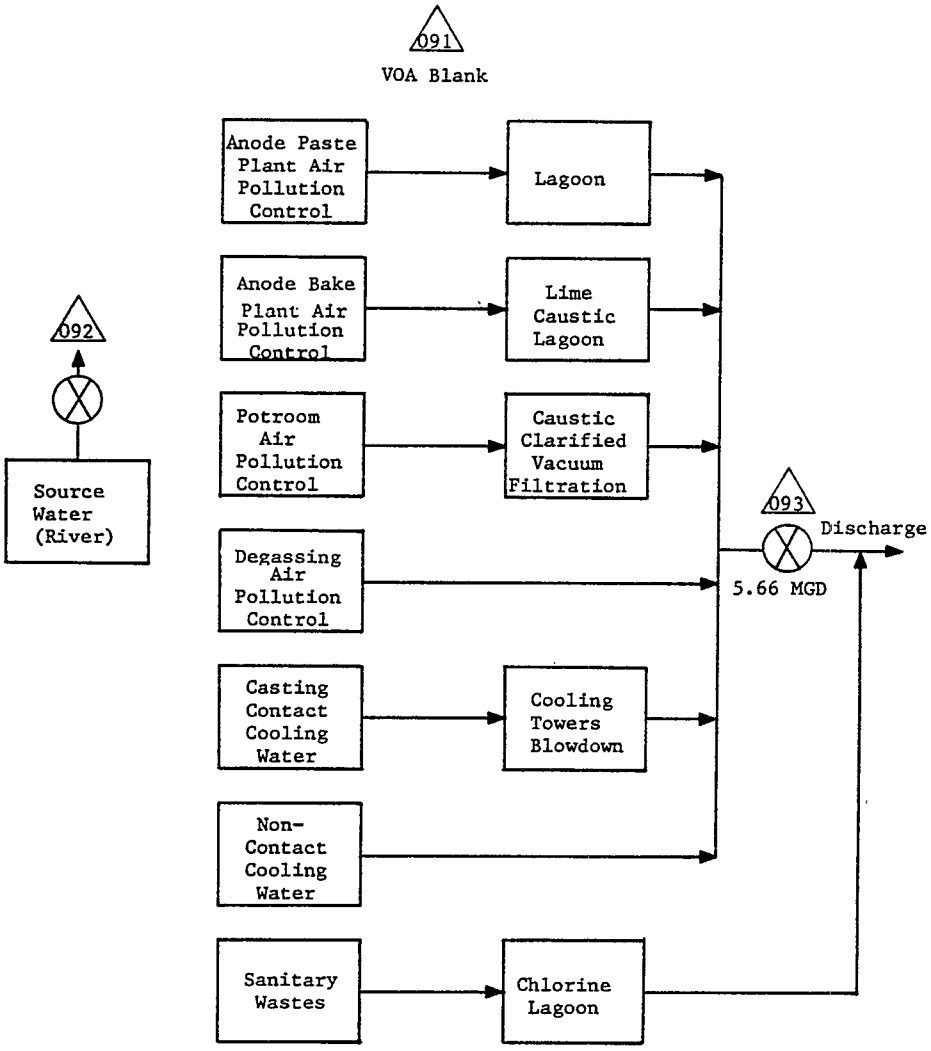

Figure V-3

SAMPLING SITES AT PRIMARY ALUMINUM PLANT C

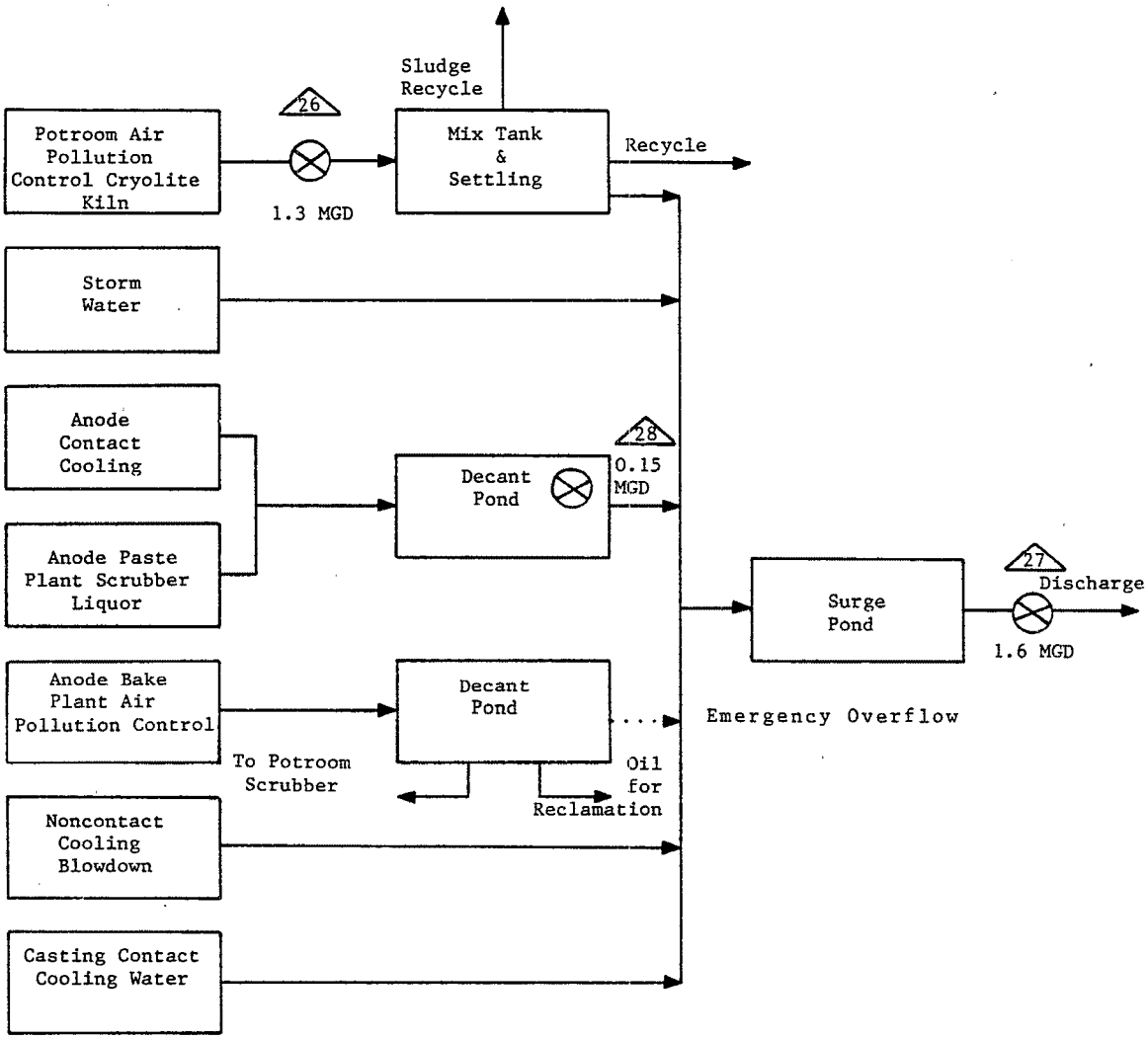

Figure V-4

SAMPLING SITES AT PRIMARY ALUMINUM PLANT D

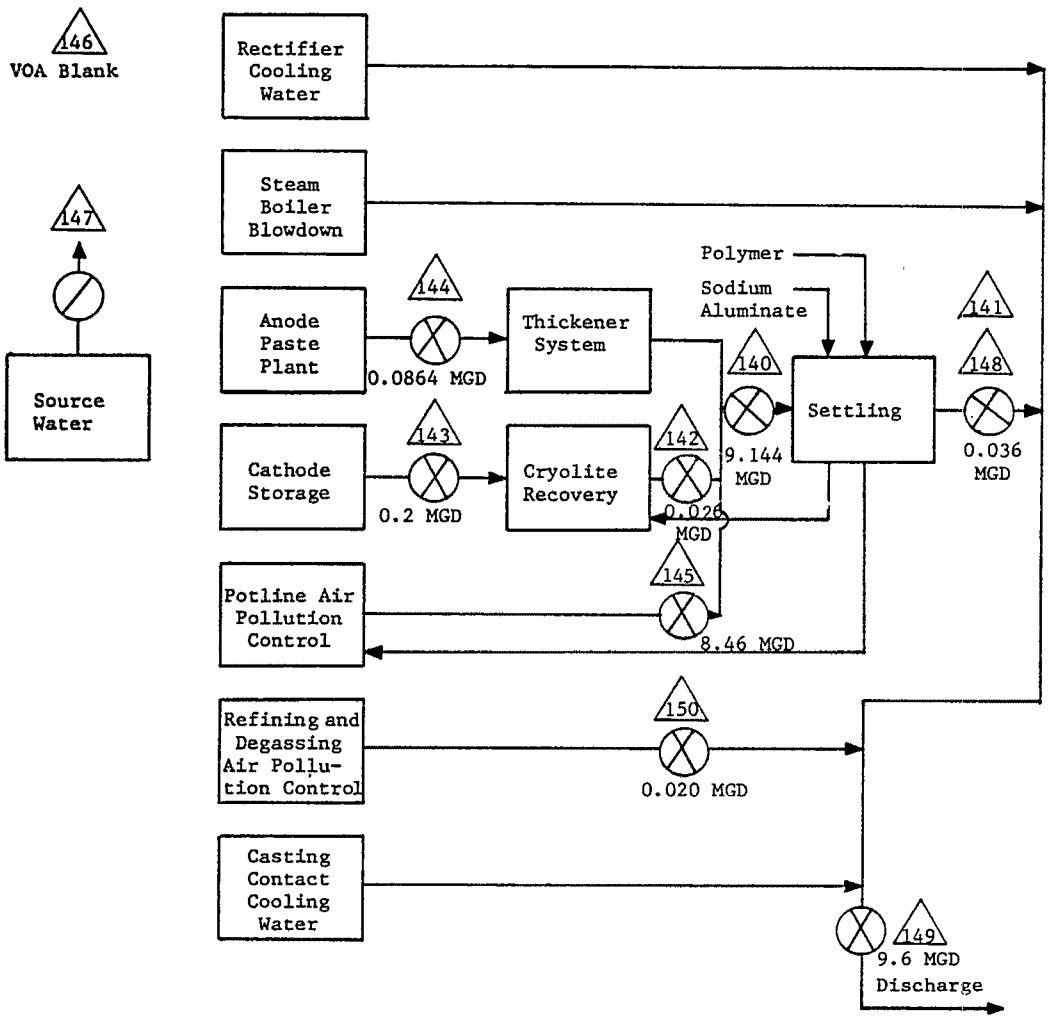

Figure V-5

SAMPLING SITES AT PRIMARY ALUMINUM PLANT E

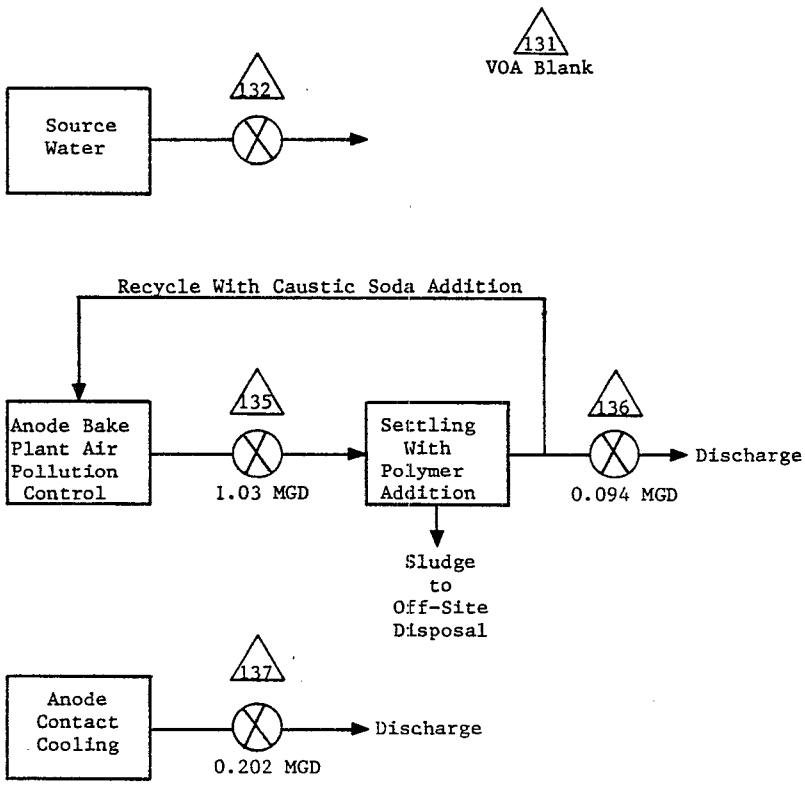

Figure V-6

SAMPLING SITES AT PRIMARY ALUMINUM PLANT F

THIS PAGE INTENTIONALLY LEFT BLANK

SECTION VI

SELECTION OF POLLUTANT PARAMETERS

This section examines chemical analysis data presented in Section V from primary aluminum plants and discusses the selection or exclusion of pollutants for potential limitation. The basis for the regulation of toxic and other pollutants is discussed in Section VI of the General Development Document (Vol I) and each pollutant selected for potential limitation is discussed there. That discussion provides information concerning where the pollutant originates (i.e., whether it is a naturally occurring substance, processed metal, or a manufactured compound); general physical properties and the form of the pollutant; toxic effects of the pollutant in humans and other animals; and behavior of the pollutant in POTW at the concentrations expected in industrial discharges.

The discussion that follows describes the analysis that was performed to select or exclude pollutants for further consideration for limitations and standards. Pollutants are selected for further consideration if they are present in concentrations treatable by the technologies considered in this analysis. The treatable concentrations used for the toxic metals were the long-term performance values achievable by lime precipitation, sedimentation, and filtration. The treatable concentrations for the toxic organics were the long-term performance values achievable by carbon adsorption.

After proposal, the Agency re-evaluated the treatment performance of activated carbon adsorption to control toxic organic pollutants. The treatment performance for the acid extractable, base-neutral extractable, and volatile organic pollutants has been set equal to the analytical quantification limit of 0.010 mg/l. The analytical quantification limit for pesticides and total phenols (by 4-AAP method) is 0.005 mg/l, which is below the 0.010 mg/l accepted for the other toxic organics. However, to be consistent, the treatment performance of 0.010 mg/l is used for pesticides and total phenols. The 0.010 mg/l concentration is achievable, assuming enough carbon is used in the column and a suitable contact time is allowed. The frequency of occurrence for 36 of the toxic pollutants has been redetermined based on the revised treatment performance value. As a result, naphthalene, which was not selected at proposal, has been selected for further consideration for limitation.

CONVENTIONAL AND NONCONVENTIONAL POLLUTANT PARAMETERS

This study considered samples from the primary aluminum subcategory for three conventional pollutant parameters (oil and grease, total suspended solids, and pH) and six nonconventional pollutant parameters (aluminum, ammonia, chemical oxygen demand,

chloride, fluoride, total organic carbon, and total phenols).

CONVENTIONAL AND NONCONVENTIONAL POLLUTANT PARAMETERS SELECTED

The conventional and nonconventional pollutants and pollutant parameters selected for consideration for limitation in this subcategory are:

aluminum
fluoride
total suspended solids (TSS)
oil and grease
pH

Aluminum is selected for consideration for limitation for two reasons: (1) it is the major product of plants in this subcategory, and (2) it was found at concentrations higher than those achievable by identified treatment technology (1.49 mg/l) in three of four samples from three plants.

Fluoride is found primarily in wastewaters from wet scrubbing of gases from the primary reduction of alumina to aluminum. Fluorides were measured above the concentration attainable by identified treatment technology (14.5 mg/l) in 12 of 16 samples from seven plants. Treatable concentrations ranged from 63 to 13,000 mg/l. Therefore, fluoride is selected for consideration for limitation.

Total suspended solids ranged from 4 to 54,500 mg/l. Eighteen of 18 samples had concentrations above that achievable by identified treatment technology (2.6 mg/l). Furthermore, most of the technologies used to remove toxic metals do so by precipitating the metals. A limitation on total suspended solids ensures that sedimentation to remove precipitated toxic metals is effectively operating. Therefore, total suspended solids is selected for consideration for limitation.

Oil and grease concentrations in the wastewaters sampled ranged from 2 to 1,400 mg/l in 18 samples. The processing of coal tar pitch and coke in the anode paste and bake operations is the principal source of these pollutants. The concentration in 12 of the 18 samples exceeded the treatable concentration (10 mg/l). Thus, this pollutant is selected for consideration for limitation.

The pH values observed ranged from 5.0 to 11.0. Effective removal of toxic metals by precipitation requires careful control of pH. Therefore, pH is considered for limitation in this subcategory.

TOXIC POLLUTANTS

The frequency of occurrence of the toxic pollutants in the wastewater samples taken is presented in Table VI-1 (page 735). These data provide the basis for the categorization of specific

pollutants, as discussed below. Table VI-1 is based on the raw wastewater data from streams 145, 194, 26, 195, 126, 127, 142, 144, 28, 150, 137, and 135 (see Section V). Treatment plant samples and samples containing nonscope wastewater were not considered in the frequency count.

TOXIC POLLUTANTS NEVER DETECTED

The toxic pollutants listed in Table VI-2 (page 739) were not detected in any wastewater samples from this subcategory; therefore, they are not selected for consideration in establishing regulations:

TOXIC POLLUTANTS NEVER FOUND ABOVE THEIR ANALYTICAL QUANTIFICATION LEVEL

Toxic pollutants which are not detectable include those pollutants whose concentrations fall below EPA's nominal detection limit. The toxic pollutants listed in Table VI-3 (page 741) were never found above their analytical quantification concentration in any wastewater samples from this subcategory; therefore, they are not selected for consideration in establishing regulations.

TOXIC POLLUTANTS PRESENT BELOW CONCENTRATIONS ACHIEVABLE BY TREATMENT

The pollutant mercury is not selected for consideration in establishing limitations because it was not found in any wastewater samples from this subcategory above concentrations considered achievable by existing or available treatment technologies. Mercury was detected at, or above, its 0.0001 mg/l analytical quantification limit in three of 18 samples from 10 plants. All of the values are below the 0.026 mg/l concentration considered achievable by identified treatment technology.

TOXIC POLLUTANTS DETECTED IN A SMALL NUMBER OF SOURCES

Toxic pollutants detectable in the effluent from only a small number of sources within the subcategory and uniquely related to only those sources are not appropriate for limitation in a national regulation. The pollutants listed in Table VI-4 (page 735) were not selected for further consideration for limitation on this basis.

Although these pollutants were not selected for consideration in establishing nationwide limitations, it may be appropriate, on a case-by-case basis, for the local permit writer to specify effluent limitations.

Benzene was detected in four of eight samples collected from six plants. Two of the detected concentrations were below analytical quantification level. The other two concentrations were 0.013 mg/l and 0.016 mg/l, which are slightly above the treatable

concentration. These two samples detected above treatable concentrations were found at the same plant in two different raw wastewaters. The same streams in another plant did not contain benzene. For these reasons, benzene is not considered for limitation.

2-Chloronaphthalene was measured above its analytical quantification limit in just one of 19 samples collected at 10 plants. The reported value was 0.041 mg/l; this pollutant was not detected in any of the other 18 samples. Because it was found at just one plant, 2-chloronaphthalene is not considered for limitation.

Chloroform, a common laboratory solvent, was detected in three of eight samples collected from six plants. Only one concentration was above the analytical quantification limit and this was above the treatable concentration. This pollutant is not attributable to specific materials or processes associated with the primary aluminum subcategory. Sample contamination is the probable source of this pollutant; therefore, chloroform is not considered for limitation.

Bis(2-chloroisopropyl) ether was found above its analytical quantification limit in just one of 19 samples collected at 10 plants. This pollutant was not detected in 17 other samples. Therefore, bis(2-chloroisopropyl) ether is not considered for limitation.

Methylene chloride was detected in two of eight samples from six plants. Only one concentration was above the analytical quantification limit and this was above the treatable concentration. The reported value (0.055 mg/l) was from potroom wet air pollution control raw wastewater. Methylene chloride from this stream at another plant was not detected. This pollutant is not attributable to specific materials or processes associated with the primary aluminum subcategory, but is a common solvent used in analytical laboratories. There is a high probability of sample contamination. For these reasons, methylene chloride is not considered for limitation.

N-nitrosodiphenylamine was detected above its analytical quantification limit in only one of 19 samples taken at 10 plants. The detected concentration was 0.057 mg/l. Although this value is above the 0.010 mg/l considered attainable by identified treatment technology, N-nitrosodiphenylamine is not considered for limitation because it was found above a treatable concentration at only one plant.

Phenol was detected above its analytical quantification limit in only one of six samples taken from two plants. Although the 0.070 mg/l concentration observed is above the 0.010 mg/l treatable concentration, phenol is not considered for limitation because it was found at only one plant.

Bis(2-ethylhexyl) phthalate was found above its analytical

quantification limit in 12 of 19 samples from 10 plants. The concentrations observed ranged from 0.011 to 2.50 mg/l. The presence of this pollutant is not attributable to materials or processes associated with the primary aluminum subcategory. It is commonly used as a plasticizer in laboratory and field sampling equipment. EPA suspects sample contamination as the source of this pollutant. Therefore, bis(2-ethylhexyl) phthalate is not considered for limitation.

Butyl benzyl phthalate was found above its analytical quantification limit in four of 19 samples from 10 plants. The concentrations ranged from 0.012 to 0.085 mg/l. The presence of this pollutant is not attributable to materials or processes associated with the primary aluminum subcategory. It is commonly used as a plasticizer in laboratory and field sampling equipment. EPA suspects sample contamination as the source of this pollutant. Therefore, butyl benzyl phthalate is not considered for limitation.

Di-n-butyl phthalate was found above its analytical quantification limit in three of 19 samples from 10 plants. The concentrations observed ranged from 0.022 to 0.126 mg/l. Two of the three samples showed concentrations above the 0.010 mg/l treatable concentration. The presence of this pollutant is not attributable to materials or processes associated with the primary aluminum subcategory. It is commonly used as a plasticizer in laboratory and field sampling equipment. EPA suspects sample contamination as the source of this pollutant. Therefore, di-n-butyl phthalate is not considered for limitation.

3,4-Benzofluoranthene was detected above its analytical quantification limit in just one of 19 samples from 10 plants. Since it was found in only one plant, 3,4-benzofluoranthene is not considered for limitation.

Benzo(k)fluoranthene was also found above its analytical quanti fication limit in just one of 19 samples. Therefore, benzo(k)-fluoranthene is not considered for limitation.

Acenaphthylene was detected in six of 19 samples from 10 waste streams sampled. This pollutant was present below the quantification limit in five of the samples. Only one sample contained a treatable concentration of acenaphthylene. Since it was found treatable at only one plant, acenaphthylene is not considered for limitation.

Indeno(1,2,3-cd)pyrene was detected above its analytical quantification limit in two of 19 samples taken from 10 plants. Since it was found in only two plants, indeno(1,2,3-cd)pyrene is not considered for limitation.

The first group of PCB's (polychlorinated biphenyls) was detected above its analytical quantification limit in one of three samples taken at three plants. The group contains PCB-1242, PCB-1254, and PCB-1221, which are reported together since they are not

clearly separated by the analytical protocol used in this study. Because these pollutants were detected in a small number of sources, they are not considered for limitation.

Beryllium was found above its analytical quantification limit in 12 of 21 samples taken from 10 plants. Concentrations ranged from 0.02 to 0.4 mg/l. Only one sample contained a concentration above the 0.20 mg/l considered attainable by identified technology. Because it was found at a treatable concentration at only one plant, beryllium is not considered for limitation.

Silver was measured above its analytical quantification limit in 10 of 21 samples. Three samples contained treatable concentrations of silver, all measured at the same plant. Therefore, silver is not considered for limitation.

TOXIC POLLUTANTS SELECTED FOR FURTHER CONSIDERATION FOR LIMITATION

The toxic pollutants listed below are selected for further consideration in establishing limitations for this subcategory. The toxic pollutants selected are each discussed following the list.

1. acenaphthene
39. fluoranthene
55. naphthalene
72. benzo(a)anthracene
73. benzo(a)pyrene
76. chrysene
78. anthracene (a)
79. benzo(ghi)perylene
80. fluorene
81. phenanthrene (a)
82. dibenzo(a,h)anthracene
84. pyrene
114. antimony
115. arsenic
116. asbestos
118. cadmium
119. chromium
120. copper
121. cyanide
122. lead
124. nickel
125. selenium
128. zinc

(a) Reported together as a combined value.

Acenaphthene was found above its analytical quantification limit in 14 of 19 samples from 10 plants, with concentrations ranging from 0.011 to 29.0 mg/l. Ten of those samples, representing five plants, were above the 0.010 mg/l concentration attainable by identified treatment technology. Therefore, acenaphthene is

selected for further consideration for limitation.

Fluoranthene was measured above its analytical quantification limit in 15 of 19 samples from 10 plants with concentrations ranging from 0.073 to 32.0 mg/l. All 15 samples, representing seven plants, were above the 0.010 treatable concentration. Therefore, fluoranthene is selected for further consideration for limitation.

Naphthalene was detected in 11 of 19 samples collected from 10 plants. Seven of the 11 detected concentrations were above the treatable concentration (0.010 mg/l) attainable by identified treatment technology. These concentrations ranged from 0.02 mg/l to 7.7 mg/l. Seven of the 10 raw wastewater streams sampled were found to contain naphthalene. Therefore, naphthalene is selected for further consideration for limitation.

Benzo(a)anthracene was found above its analytical quantification limit in 15 of 19 samples, taken from 10 plants, with concentrations ranging from 0.014 to 14.0 mg/l. Fourteen samples, representing seven plants, were above the 0.010 mg/l range considered attainable by identified treatment technology. Therefore, benzo-(a)anthracene is selected for further consideration for limita-tion.

Benzo(a)pyrene was found above its analytical quantification limit in 13 of 19 samples, taken from 10 plants, with concentrations ranging from 0.017 to 11.0 mg/l. Twelve samples, representing six plants, were also above the 0.010 mg/l concentration considered attainable by identified treatment technology. Therefore, benzo(a)pyrene is selected for further consideration for limitation.

Chrysene was measured above its analytical quantification limit in 15 of 19 samples, taken from 10 plants, with concentrations ranging from 0.030 to 30.0 mg/l. There were 14 samples, representing seven plants, above the 0.010 mg/l concentration considered attainable by identified treatment technology. Therefore, chrysene is selected for further consideration for limitation.

The toxic pollutants anthracene and phenanthrene are not clearly separated by the analytical protocol used in this study; thus, they are reported together. The sum of these pollutants was measured at concentrations greater than their analytical quantification limit in 12 of 19 samples, collected at 10 plants, with concentrations ranging from 0.029 to 22.0 mg/l. Eleven of the 12 samples, representing five plants, were above the 0.010 mg/l treatable concentration. Therefore, anthracene and phenanthrene are selected for further consideration for limitation.

Benzo(ghi)perylene was found above its analytical quantification limit in six of 19 samples, taken from 10 plants, with concentrations ranging from 0.019 to 2.40 mg/l. Five of the six

samples, representing four plants, were above the 0.010 mg/l concentration attainable by identified treatment technology. Therefore, benzo-(ghi)perylene is selected for further consideration for limitation.

Fluorene was measured above its analytical quantification limit in nine of 19 samples, taken from 10 plants, with concentrations ranging from 0.039 to 5.30 mg/l. All nine samples, representing four plants, were above the 0.010 mg/l concentration attainable by identified treatment technology. Therefore, fluorene is selected for further consideration for limitation.

Dibenzo(a,h)anthracene was found above its analytical quantification limit in five of 19 samples, taken from 10 plants, with con centrations ranging from 0.012 to 1.9 mg/l. All five samples, representing four plants, were above the 0.010 mg/l concentration attainable by identified treatment technology. Therefore, dibenzo(a,h)anthracene is selected for further consideration for limitation.

Pyrene was found above its analytical quantification limit in 16 of 19 samples, taken from 10 plants, with concentrations ranging from 0.05 to 34.0 mg/l. All 16 samples, representing eight plants, were above the 0.010 mg/l concentration attainable by identified treatment technology. Therefore, pyrene is selected for further consideration for limitation.

Antimony was measured above its analytical quantification limit in 14 of 21 samples, taken from 11 plants, with concentrations ranging from 0.05 to 1.5 mg/l. Since five samples, representing three plants, were also above the 0.47 mg/l concentration attainable by identified treatment technology, antimony is selected for further consideration for limitation. Selection of antimony is further justified based on the analytical data collected during the Agency's pilot scale treatability study. Antimony was found in 10 of 10 samples all above 1 mg/l.

Arsenic was found above its analytical quantification limit in 17 of 21 samples, taken from 11 plants, with concentrations ranging from 0.006 to 1.5 mg/l. Seven samples, representing five plants, were above the 0.043 mg/l concentration attainable by identified treatment technology. Therefore, arsenic is selected for further consideration for limitation.

Asbestos (chrysotile) was measured above its analytical quantification limit in the one raw wastewater sample analyzed for this pollutant. The measured value was 310 million fibers per liter (MFL) which is well above the value of 10 million fibers attainable by the identified treatment technology. At the plant where it was detected, both the source water and the wastewater discharge contained negligible concentrations of asbestos. Asbestos is considered for further limitation since it was detected above a treatable concentration in the only sample it was analyzed for.

Cadmium was measured above its analytical quantification limit in 10 of 21 samples, taken from 11 plants, with concentrations ranging from 0.0026 to 0.2 mg/l. Eight samples, representing four plants, were above the 0.049 mg/l concentration attainable by identified treatment technology. Therefore, cadmium is selected for further consideration for limitation.

Chromium was found above its analytical quantification limit in 17 of 21 samples, taken from 11 plants, with concentrations ranging from 0.006 to 6.0 mg/l. Three samples, representing two plants, were above the 0.07 mg/l concentration attainable by identified treatment technology. Therefore, chromium is selected for further consideration for limitation.

Copper was measured above its analytical quantification limit in 20 of 21 samples, taken from 11 plants, with concentrations selected for further consideration for limitation.

Lead was found in concentrations above its analytical quantification limit in 15 of 21 samples, taken from 11 plants, with concentrations ranging from 0.008 to 5.0 mg/l. Twelve samples, representing six plants, were above the 0.08 mg/l concentration attainable by identified treatment technology. Therefore, lead is selected for further consideration for limitation.

Cyanide was found above its analytical quantification limit in 20 of 22 samples, taken from 12 plants, with concentrations ranging from 0.002 to 180.0 mg/l. Since 10 samples, representing five plants, were also above the1.1 mg/l concentrations attainable by identified treatment technology (refer to Section VII - Pilot Scale Treatability Study), cyanide is selected for further consideration for limitation.

Nickel was measured above its analytical quantification limit in 17 of 21 samples, taken from 11 plants, with concentrations ranging from 0.014 to 4.0 mg/l. Since 11 samples, representing six plants, were also above the 0.22 mg/l concentration attainable by identified treatment technology, nickel is selected for further consideration for limitation. Selection of nickel is further justified based on the analytical data collected during the Agency's pilot scale treatability study. Nickel was found in 10 of 10 samples all greater than 0.22 mg/l.

Selenium was found above its analytical quantification limit in 14 of 21 samples, taken from 11 plants, with concentrations ranging from 0.01 to 44.0 mg/l. Eight samples, representing two plants, were above the 0.20 mg/l concentration attainable by the identified treatment technology. Therefore, selenium is selected for further consideration for limitation.

Zinc was measured above its analytical quantification concentration in 18 of 21 samples taken from 11 plants, with concentrations ranging from 0.01 to 1.0 mg/l. Seven samples, representing three plants, were above the 0.23 mg/l concentration

attainable by the identified treatment technology. Therefore, zinc is selected for further consideration for limitation.

Table VI-1

FREQUENCY OF OCCURRENCE OF TOXIC POLLUTANTS
PRIMARY ALUMINUM
RAW WASTEWATER

Pollutant	Analytical Quantification Concentration (mg/l)(a)	Treatable Concentration (mg/l)(b)	Number of Streams Analyzed	Number of Samples Analyzed	ND	Detected Below Quantification Concentration	Detected Below Treatable Concentration	Detected Above Treatable Concentration
1. acenaphthene	0.010	0.010	10	19	5	4		10
2. acrolein	0.010	0.010	6	8	8			
3. acrylonitrile	0.010	0.010	6	8	8			
4. benzene	0.010	0.010	6	8	4	2		2
5. benzidine	0.010	0.010	10	19	19			
6. carbon tetrachloride	0.010	0.010	6	8	8			
7. chlorobenzene	0.010	0.010	6	8	8			
8. 1,2,4-trichlorobenzene	0.010	0.010	10	19	19			
9. hexachlorobenzene	0.010	0.010	10	19	19			
10. 1,2-dichloroethane	0.010	0.010	6	8	8			
11. 1,1,1-trichloroethane	0.010	0.010	6	8	8			
12. hexachloroethane	0.010	0.010	10	19	19			
13. 1,1-dichloroethane	0.010	0.010	6	8	8			
14. 1,1,2-trichloroethane	0.010	0.010	6	8	8			
15. 1,1,2,2-tetrachloroethane	0.010	0.010	6	8	8			
16. chloroethane	0.010	0.010	6	8	8			
17. bis(chloromethyl) ether	0.010	0.010	6	8	8			
18. bis(2-chloroethyl) ether	0.010	0.010	10	19	19			
19. 2-chloroethyl vinyl ether	0.010	0.010	6	8	8			
20. 2-chloronaphthalene	0.010	0.010	10	19	18			1
21. 2,4,6-trichlorophenol	0.010	0.010	2	4	4			
22. parachlorometa cresol	0.010	0.010	2	4	4			
23. chloroform	0.010	0.010	6	8	5	2		1
24. 2-chlorophenol	0.010	0.010	2	4	4			
25. 1,2-dichlorobenzene	0.010	0.010	10	19	19			
26. 1,3-dichlorobenzene	0.010	0.010	10	19	19			
27. 1,4-dichlorobenzene	0.010	0.010	10	19	19			
28. 3,3'-dichlorobenzidine	0.010	0.010	10	19	19			
29. 1,1-dichloroethylene	0.010	0.010	6	8	8			
30. 1,2-trans-dichloroethylene	0.010	0.010	6	8	8			
31. 2,4-dichlorophenol	0.010	0.010	2	4	4			
32. 1,2-dichloropropane	0.010	0.010	6	8	8			
33. 1,3-dichloropropylene	0.010	0.010	6	8	8			
34. 2,4-dimethylphenol	0.010	0.010	2	4	4			
35. 2,4-dinitrotoluene	0.010	0.010	10	19	19			
36. 2,6-dinitrotoluene	0.010	0.010	10	19	19			
37. 1,2-diphenylhydrazine	0.010	0.010	10	19	19			

Table VI-1 (Continued)

FREQUENCY OF OCCURRENCE OF TOXIC POLLUTANTS
PRIMARY ALUMINUM
RAW WASTEWATER

Pollutant	Analytical Quantification Concentration (mg/l)(a)	Treatable Concentration (mg/l)(b)	Number of Streams Analyzed	Number of Samples Analyzed	ND	Detected Below Quantification Concentration	Detected Below Treatable Concentration	Detected Above Treatable Concentration
38. ethylbenzene	0.010	0.010	6	8	8			
39. fluoranthene	0.010	0.010	10	19	4			15
40. 4-chlorophenyl phenyl ether	0.010	0.010	10	19	17	1		1
41. 4-bromophenyl phenyl ether	0.010	0.010	10	19	19			
42. bis(2-chloroisopropyl) ether	0.010	0.010	10	19	19			
43. bis(2-chloroethoxy) methane	0.010	0.010	10	19	19			
44. methylene chloride	0.010	0.010	6	8	6	1		1
45. methyl chloride	0.010	0.010	6	8	8			
46. methyl bromide	0.010	0.010	6	8	8			
47. bromoform	0.010	0.010	6	8	8			
48. dichlorobromomethane	0.010	0.010	6	8	8			
49. trichlorofluoromethane	0.010	0.010	6	8	8			
50. dichlorodifluoromethane	0.010	0.010	6	8	8			
51. chlorodibromomethane	0.010	0.010	6	8	8			
52. hexachlorobutadiene	0.010	0.010	10	19	19			
53. hexachlorocyclopentadiene	0.010	0.010	10	19	19			
54. isophorone	0.010	0.010	10	19	17	2		
55. naphthalene	0.010	0.010	10	19	8	4		7
56. nitrobenzene	0.010	0.010	10	19	19			
57. 2-nitrophenol	0.010	0.010	2	4	4			
58. 4-nitrophenol	0.010	0.010	2	4	4			
59. 2,4-dinitrophenol	0.010	0.010	2	4	4			
60. 4,6-dinitro-o-cresol	0.010	0.010	2	4	4			
61. N-nitrosodimethylamine	0.010	0.010	10	19	19			
62. N-nitrosodiphenylamine	0.010	0.010	10	19	16	2		1
63. N-nitrosodi-n-propylamine	0.010	0.010	10	19	19			
64. pentachlorophenol	0.010	0.010	2	4	4			
65. phenol	0.010	0.010	2	4	3			1
66. bis(2-ethylhexyl) phthalate	0.010	0.010	10	19	2	5		12
67. butyl benzyl phthalate	0.010	0.010	10	19	15			4
68. di-n-butyl phthalate	0.010	0.010	10	19	9	7		3
69. di-n-octyl phthalate	0.010	0.010	10	19	18	1		
70. diethyl phthalate	0.010	0.010	10	19	18	1		
71. dimethyl phthalate	0.010	0.010	10	19	19			
72. benzo(a)anthracene	0.010	0.010	10	19	4	1		14
73. benzo(a)pyrene	0.010	0.010	10	19	6	1		12
74. 3,4-benzofluoranthene	0.010	0.010	10	19	9	9		1

Table VI-1 (Continued)

FREQUENCY OF OCCURRENCE OF TOXIC POLLUTANTS
PRIMARY ALUMINUM
RAW WASTEWATER

Pollutant	Analytical Quantification Concentration (mg/l)(a)	Treatable Concentration (mg/l)(b)	Number of Streams Analyzed	Number of Samples Analyzed	ND	Detected Below Quantification Concentration	Detected Below Treatable Concentration	Detected Above Treatable Concentration
75. benzo(k)fluoranthene	0.010	0.010	10	19	9	9		1
76. chrysene	0.010	0.010	10	19	4	1		14
77. acenaphthylene	0.010	0.010	10	19	13	5		1
78. anthracene (c)	0.010	0.010	10	19	2	5	1	11
79. benzo(ghi)perylene	0.010	0.010	10	19	12	1	1	5
80. fluorene	0.010	0.010	10	19	5	5		9
81. phenanthrene (c)	0.010	0.010	10	19	2	5	1	11
82. dibenzo(a,h)anthracene	0.010	0.010	10	19	13	1		5
83. indeno(1,2,3-cd)pyrene	0.010	0.010	10	19	15	2		2
84. pyrene	0.010	0.010	10	19	2	1		16
85. tetrachloroethylene	0.010	0.010	6	8	8			
86. toluene	0.010	0.010	6	8	6	2		
87. trichloroethylene	0.010	0.010	6	8	7	1		
88. vinyl chloride	0.010	0.010	6	8	8			
89. aldrin	0.005	0.010	3	3	2	1		
90. dieldrin	0.005	0.010	3	3	1	2		
91. chlordane	0.005	0.010	3	3		3		
92. 4,4'-DDT	0.005	0.010	3	3		3		
93. 4,4'-DDE	0.005	0.010	3	3	2	1		
94. 4,4'-DDD	0.005	0.010	3	3	2	1		
95. alpha-endosulfan	0.005	0.010	3	3	2	1		
96. beta-endosulfan	0.005	0.010	3	3	2	1		
97. endosulfan sulfate	0.005	0.010	3	3	2	1		
98. endrin	0.005	0.010	3	3	2	1		
99. endrin aldehyde	0.005	0.010	3	3		3		
100. heptachlor	0.005	0.010	3	3	1	2		
101. heptachlor epoxide	0.005	0.010	3	3	1	2		
102. alpha-BHC	0.005	0.010	3	3	1	2		
103. beta-BHC	0.005	0.010	3	3	1	2		
104. gamma-BHC	0.005	0.010	3	3		3		
105. delta-BHC	0.005	0.010	3	3	1	2		
106. PCB-1242 (d)	0.005	0.010	3	3		2		1
107. PCB-1254 (d)	0.005		3	3		2		1
108. PCB-1221 (d)	0.005		3	3		2		1
109. PCB-1232 (e)	0.005	0.010	3	3		3		
110. PCB-1248 (e)	0.005		3	3		3		
111. PCB-1260 (e)	0.005		3	3		3		
112. PCB-1016 (e)	0.005		3	3		3		

Table VI-1 (Continued)

FREQUENCY OF OCCURRENCE OF TOXIC POLLUTANTS
PRIMARY ALUMINUM
RAW WASTEWATER

Pollutant	Analytical Quantification Concentration (mg/l)(a)	Treatable Concentration (mg/l)(b)	Number of Streams Analyzed	Number of Samples Analyzed	ND	Detected Below Quantification Concentration	Detected Below Treatable Concentration	Detected Above Treatable Concentration
113. toxaphene	0.005	0.010	3	3	2	1		
114. antimony	0.100	0.47	11	21	7			4
115. arsenic	0.010	0.34	11	21	4		10	7
116. asbestos	10 MFL	10 MFL	1	1				1
117. beryllium	0.010	0.20	11	21	9		11	1
118. cadmium	0.002	0.049	11	21	11		2	8
119. chromium	0.005	0.07	11	21	4		14	3
120. copper	0.009	0.39	11	21	1		16	4
121. cyanide	0.02(f)	1.1 (g)	12	22	2		10	10
122. lead	0.020	0.08	11	21	6		3	12
123. mercury	0.0001	0.036	10	18	15		3	
124. nickel	0.005	0.22	11	21	4		6	11
125. selenium	0.01	0.20	11	21	7		1	13
126. silver	0.02	0.07	11	21	11		7	3
127. thallium	0.100	0.34	11	21	14		2	5
128. zinc	0.050	0.23	11	21	3		11	7
129. 2,3,7,8-tetrachlorodibenzo-p-dioxin (TCDD)	Not analyzed							

(a) Analytical quantification concentration was reported with the data (see Section V).

(b) Treatable concentrations are based on performance of lime precipitation, sedimentation, and filtration for toxic metal pollutants and activated carbon adsorption for toxic organic pollutants.

(c),(d),(e) Reported together.

(f) Analytical quantification concentration for EPA Method 335.2, Total Cyanide Methods for Chemical Analysis of Water and Wastes, EPA-600/4-79-020, March, 1979.

(g) Based on cyanide precipitation, lime precipitation, sedimentation, and multimedia filtration. Refer to Section VII - Pilot Scale Treatability Study.

TABLE VI-2

TOXIC POLLUTANTS NEVER DETECTED

2. acrolein
3. acrylonitrile
5. benzidene
6. carbon tetrachloride
7. chlorobenzene
8. 1,2,4-trichlorobenzene
9. hexachlorobenzene
10. 1,2-dichloroethane
11. 1,1,1-trichloroethane
12. hexachloroethane
13. 1,1-dichloroethane
14. 1,1,2-trichloroethane
15. 1,1,2,2-tetrachloroethane
16. chloroethane
17. DELETED
18. bis(2-chloroethyl) ether
19. 2-chloroethyl vinyl ether
21. 2,4,6-trichlorophenol
22. parachlorometa cresol
24. 2-chlorophenol
25. 1,2-dichlorobenzene
26. 1,3-dichlorobenzene
27. 1,4-dichlorobenzene
28. 3,3'-dichlorobenzidiene
29. 1,1-dichloroethylene
30. 1,2-trans -dichloroethylene
31. 2,4-dichlorophenol
32. 1,2-dichloropropane
33. 1,3-dichloropropylene
34. 2,4-dimethylphenol
35. 2,4-dinitrotoluene
36. 2,6-dinitrotoluene
37. 1,2-diphenylhydrazine
38. ethylbenzene
40. 4-chlorophenyl phenyl ether
41. 4-bromophenyl phenyl ether
43. bis(2-chloroethoxy) methane
45. methyl chloride
46. methyl bromide
47. bromoform
48. dichlorobromomethane
49. DELETED

TABLE VI-2 (Continued)

TOXIC POLLUTANTS NEVER DETECTED

50. DELETED
51. chlorodibromomethane
52. hexachlorobutadiene
53. hexachlorocyclopentadiene
56. nitrobenzene
57. 2-nitrophenol
58. 4-nitrophenol
59. 2,4-dinitrophenol
60. 4,6-dinitro-o-cresol
61. N-nitrosodimethylamine
63. N-nitrosodi-n-propylamine
64. pentachlorophenol
71. dimethyl phthalate
85. tetrachloroethylene
88. vinyl chloride
129. 2,3,7,8-tetrachlorodibenzo-p-dioxin (TCDD)

TABLE VI-3

TOXIC POLLUTANTS NEVER FOUND ABOVE THEIR ANALYTICAL QUANTIFICATION LEVEL

54.	isophorone	
69.	di-n-octyl phthalate	
70.	diethyl phthalate	
86.	toluene	
87.	trichloroethylene	
89.	aldrin	
90.	dieldrin	
91.	chlordane	
92.	4,4'-DDT	
93.	4,4'-DDE	
94.	4,4'-DDD	
95.	alpha-endosulfan	
96.	beta-endosulfan	
97.	endosulfan sulfate	
98.	endrin	
99.	endrin aldehyde	
100.	heptachlor	
101.	heptachlor epoxide	
102.	alpha-BHC	
103.	beta-BHC	
104.	gamma-BHC	
105.	delta-BHC	
109.	PCB-1232	(a)
110.	PCB-1248	(a)
111.	PCB-1260	(a)
112.	PCB-1016	(a)
113.	toxaphene	

(a) Reported together as a combined value.

TABLE VI-4

TOXIC POLLUTANTS DETECTED IN A SMALL NUMBER OF SOURCES

4.	benzene	
20.	2-chloronaphthalene	
23.	chloroform	
42.	bis(2-chloroisopropyl) ether	
44.	methylene chloride	
62.	N-nitrosodiphenylamine	
65.	phenol	
66.	bis(2-ethylhexyl) phthalate	
67.	butyl benzyl phthalate	
68.	di-n-butyl phthalate	
74.	3,4-benzofluoranthene	
75.	benzo(k)fluoranthene	
77.	acenaphthylene	
83.	indeno(1,2,3-cd)pyrene	
106.	PCB-1242	(a)
107.	PBC-1254	(a)
108.	PCB-1221	(a)
117.	beryllium	
126.	silver	
127.	thallium	

(a) Reported together as a combined value.

SECTION VII

CONTROL AND TREATMENT TECHNOLOGIES

The preceding sections of this supplement discussed the wastewater sources, flows, and characteristics of the wastewaters from primary aluminum plants. This section summarizes the description of these wastewaters, indicates the level of treatment which is currently practiced in the primary aluminum subcategory, and describes the treatment options considered by EPA for this subcategory.

TECHNICAL BASIS OF BPT

As mentioned in Section III, EPA promulgated BPT effluent limitations guidelines for the primary aluminum smelting subcategory on April 8, 1974. In order to put the treatment practices currently in place and the technologies selected for BAT options into the proper perspective it is necessary to describe the technologies selected for BPT. The BPT regulations established by EPA limited the discharge of fluoride and TSS and required the control of pH. The best practicable control treatment currently available identified was the treatment of wet scrubber water and other fluoride-containing effluents through the precipitation of fluoride, followed by settling of the precipitate and recycling of the clarified effluent to the wet scrubbers. Two precipitation technologies, cryolite precipitation and lime precipitation, were determined to be effective and it was left to the individual operator to select the one best suited for his specific application. Recycle of the clarified effluent was required, but EPA recognized that complete recycle was not practicable and made an allowance for a bleed stream to be discharged.

CURRENT CONTROL AND TREATMENT PRACTICES

This section presents a summary of the control and treatment technologies that are currently applied to each of the sources generating wastewater in this subcategory. As discussed in Section V, wastewater associated with the primary aluminum subcategory is characterized by the presence of the toxic metal pollutants, cyanide, toxic organics, fluoride, aluminum, oil and grease, and suspended solids. Generally, these pollutants are present in each of the waste streams at concentrations above treatability, so these waste streams are commonly combined for treatment to reduce the concentrations of these pollutants. Construction of one wastewater treatment system for combined treatment, in some instances, combines streams of differing alkalinity which reduces treatment chemical requirements. Seven plants in this subcategory currently have combined wastewater treatment systems, eight plants operate lime and settle treatment on at least a portion of their wastewater. One plant operates a multimedia filter as an end-of-pipe polishing step. Four options

were considered for BAT, BDT, and pretreatment in this subcategory, based on combined treatment of these compatible wastewater streams.

ANODE AND CATHODE PASTE WET AIR POLLUTION CONTROL

Preparing anode paste requires crushing, screening, calcining, and grinding and mixing of coke and pitch. These are inherently dusty operations requiring extensive particulate emission controls. Twenty-two plants preparing paste use dry air pollution control devices while only four use wet air pollution control devices. Three plants do not use any emission control. Wastewaters associated with the wet air pollution control devices have treatable concentrations of suspended solids. Organic pollutants such as fluorene, pyrene, and chrysene that are evolved during calcining of the paste also occur in treatable concentrations. None of the plants reporting this waste stream recycle any scrubber water. Two of these plants use chemical precipitation and sedimentation to treat the wastewater. One plant uses only sedimentation, while the remaining plant discharges without treatment.

ANODE BAKE PLANT WET AIR POLLUTION CONTROL

Anode bake plant air emissions are more complex than paste preparation emissions and reportedly are more difficult to control by dry methods. This is due to the fact that bake plant emissions contain combustion products, volatilized hydrocarbons, tars, and oils. The fluorides present are introduced into the bake plant as cryolite when anode butts are recycled. Dry electrostatic precipitators (ESP) and baghouses may not adequately control fluorides since the tars and oils emitted cause the equipment to be susceptible to arcing and blinding, respectively, which inhibit the performance of these systems. Wet control systems, such as wet ESP or scrubbers, are not as susceptible to problems caused by tars and oils. Fluidized alumina systems are dry systems which avoid the tar and oil blinding and arcing problems previously mentioned. Dry systems are used by 12 out of the 17 plants which control anode baking emissions. Three plants use only baghouses, three plants use activated alumina, and two plants use both activated alumina and baghouses. Of the five plants using wet control systems, four use wet scrubbers, two use wet ESP, and two use dry ESP preceded by wet scrubbers.

Wastewater from the wet air pollution control equipment at plants where anode butts are recycled must be treated for fluorides, tars, oils, and particulates. If care is taken in the removal of fused cryolite from the anode butts before reprocessing, fluoride emissions from the anode bake plant are greatly lowered; hence, the fluoride concentrations in bake plant scrubber waters would be minimized. Two of the five plants practice partial recycle of the scrubber effluent (91 and 99+ percent). Typical treatment of this wastewater, practiced at all five plants, consists of alkali addition and sedimentation for suspended solids and fluoride

removal.

ANODE AND BRIQUETTE CONTACT COOLING

This wastewater is generated when green anodes and briquettes are sprayed with water to accelerate their temperature loss and allow faster handling. Eleven of the 31 plants in the primary aluminum subcategory reported the use of anode contact cooling and briquette quenching water. This wastewater contains suspended solids, fluoride, and organics. One of the four plants reporting this effluent practices 100 percent recycle, thereby eliminating its discharge. Another plant utilizes anode cooling water as off-gas quench water in the bake plant. All water is consumed by evaporation, thereby eliminating its discharge. Alkali addition and sedimentation can be used to remove suspended solids and fluoride. The following treatment schemes are currently in place in the industry:

1. No treatment - five plants,
2. Settling pond - one plant,
3. Alkali addition and sedimentation - one plant,
4. 100 percent evaporation - two plants,
5. 100 percent reuse in other plant processes - one plant,
6. Cooling tower, retention pond, recycle - one plant.

CATHODE REPROCESSING

Cathodes are reprocessed to recover cryolite by a leaching operation. The cryolite is then precipitated from the leachate and reused. The supernatant from the precipitation step or solids underflow is the cathode reprocessing wastewater. Four plants generate this wastewater.

As discussed in Section V, wastewater from cathode reprocessing contains treatable concentrations of suspended solids, fluoride, and cyanide. Its composition is similar to that of the potline scrubber effluent, and the treatment techniques used for potline scrubber water are used to treat the cathode reprocessing effluent. The pH of the cathode reprocessing wastewater is extremely alkaline (pH of approximately 11). One plant reported using alkaline chlorination to treat cyanide prior to discharge. Three plants use cathode reprocessing water as potline scrubber liquor make-up.

POTLINE AND POTROOM WET AIR POLLUTION CONTROL

Wet and dry emission control devices are used to collect potline air emissions that contain particulates, fluorides, hydrocarbons, and sulfur oxides immediately above the electrolytic cell. Gaseous fluorides are removed by dry alumina adsorption or wet scrubbing, while particulate collection is usually performed with baghouses.

A typical dry potline emission control system includes hoods and ducts to collect and deliver the gases from the pots to air

pollution control units (the first is usually a cyclone-type device to separate coarse particulates), a reactor section in which the gases are contacted with the alumina, and a fabric filter. After passing through the fabric filter, the gases are released to the atmosphere.

Activated alumina dry collection systems allow for the subsequent return of the alumina and sorbed fluoride compounds to the pots. Generally high removal efficiencies for both gaseous fluoride compounds and particulates are obtained (e.g., greater than 99 percent). This dry scrubbing process represents a significant means of reducing effluent discharges at primary aluminum plants since it uses no water.

Although many plants have converted from wet to dry primary scrubbing since 1974, nine plants still practice wet air pollution control for potline emissions. One plant reporting a potline scrubber uses 100 percent recycle of this wastewater. Five other plants report partial recycle ranging from 88 to 99+ per cent.

Potroom emission control systems handle larger volumes of air than potline emissions control systems. Because there is a larger volume of air from this process, dry scrubbing systems are very expensive. A treated baghouse contains a limited number of sites for adsorption; therefore, larger volumes of gas decrease the life of each filter which in turn increases operating costs. Consequently, plants have typically used wet scrubbing systems to control potroom emissions. Seven plants use secondary emission controls (i.e., potroom emission control) consisting of spray chambers or packed towers. One plant reported using foam scrubbers. Six plants with potroom scrubbers reported partial recycle rates of scrubber water ranging from 42 to 99+ percent.

Water from wet scrubbers will contain fluoride, metals, suspended solids, and organics in treatable concentrations and is treated to remove impurities before it is recycled. In the case of primary potline and secondary potroom wet scrubbers, the fluoride dissolved in the water is precipitated and settled. This treatment also reduces the suspended solids and metals content at the same time.

The method most commonly used to remove the fluoride from wet air pollution control wastewaters from potlines and potrooms is precipitation either as cryolite or as calcium fluoride. In the first case, sodium aluminate (or caustic soda and hydrated alumina) is added. In the second case, a lime slurry (or calcium chloride) is used. After precipitation, the slurry is sent to a thickener. The treatment of wet scrubber liquor to recover cryolite results in sufficient removal of fluoride to permit recycle of the treated liquor. The process also recovers the fluoride in a form which can be returned to the aluminum cell bath. The value of the recovered cryolite partially offsets the cost of the treatment process. However, the gradual buildup of pollutants in the scrubber liquor requires a blowdown, preventing

total recycle of scrubber liquor. (Recovery of the cryolite is practiced at four of the nine plants reporting potline scrubbing and by two of eight plants reporting potroom scrubbers.)

Elevated levels of suspended solids (19 to 54,500 mg/l) are effectively reduced by the fluoride precipitation and sedimentation process.

POT REPAIR AND POT SOAKING

Approximately every two to three years the carbon liners of the electrolytic cells fail and must be replaced. To facilitate removal, the carbon liners are often soaked in water to make them soft. Reportedly, some plants use high pressure water jets to remove the carbon liner.

Data on pot repair and pot soaking wastewater are limited. Two of the plants reported in Table V-16 (page 688) are known to reuse pot repair-pot soaking wastewater as potline scrubber liquor make-up, and one plant reported discharging its wastewater to cathode reprocessing. Two plants reported using ion-exchange to reduce cyanide concentrations and lime to precipitate fluoride. Since each primary aluminum plant must replace the carbon liners (or cathodes) and very few plants report generating or discharging this wastewater, it is assumed most plants recycle and reuse pot soaking wastewater, or use dry removal techniques.

DEGASSING WET AIR POLLUTION CONTROL

The method most commonly used for degassing and refining molten aluminum is to inject the aluminum with chlorine and other inert gases. The hydrogen is absorbed into the chlorine bubbles, and gaseous hydrochloric acid is subsequently produced. Because of the corrosive nature of the gas stream, it may be necessary to use wet air pollution control devices instead of dry control equipment to reduce the pollutant emissions. Three primary aluminum plants reported using wet air pollution controls for the degassing operation.

Emphasis has been placed on examining methods for eliminating the need for wet control devices rather than on methods of treating the scrubber effluent.

Past emission control efforts have resulted in the development and successful use of gas mixtures such as chlorine plus an inert gas, or chlorine, carbon monoxide, and nitrogen. In the case of mixed gases, gas burners or controlled combustion gas generators are used to produce a gas of carefully controlled composition. The following is a list of alternative in-line fluxing and filtering methods:

1. Flotation with mixtures of chlorine and other gases,

2. Impingement, and

3. Counter flow impingement.

Since primary aluminum plants are also often aluminum formers, degassing is often performed in conjunction with the aluminum forming demagging operation. This can make the application of alternative degassing methods more difficult. All of the above listed degassing alternatives are in commercial use on a regular basis and may be considered established practice in one or more producing plants. The viability of each degassing alternative varies from plant to plant. As a result, the applicability of any specific process alternative is determined on an individual basis.

CASTING CONTACT COOLING

All of the different aluminum casting contact cooling wastewaters are grouped together for discussion because they differ primarily in the volume of water used and discharged. With the exception of oil and grease, the pollutant concentrations in the casting contact cooling waters are expected to be similar. Oil and grease concentrations may differ among the wastewaters depending upon the use of lubrication agents for casting.

Of the 31 primary aluminum plants, 28 reported the use of casting contact cooling water. Three plants achieved zero discharge through evaporation, one plant achieved zero discharge through spray irrigation, and one achieved zero discharge by using the contact cooling bleed stream as makeup water for the potline scrubber. The remaining plants discharge the cooling water.

Casting contact cooling water will contain dissolved and suspended solids and, if a mold lubricant is used, oil and grease. Control of wastewater from direct contact cooling is commonly achieved by means of a cooling tower, with recycle of the water. A bleed stream may be necessary to reduce concentrations of dissolved and suspended solids, and oil and grease. Eleven of the 28 plants recycle this wastewater. The recycle rates ranged from 20 to 99+ percent.

Oil and grease concentrations in the contact cooling effluent stream may be reduced by the use of oil skimmers. The bleed stream may also need to be treated for oil and grease and dissolved and suspended solids. Suspended solids may be removed simply by sedimentation, while dissolved solids must be precipitated from solution. Data supplied by the primary aluminum subcategory indicate that three facilities incorporate oil skimming into their wastewater treatment plants.

CONTROL AND TREATMENT OPTIONS

The Agency examined four control and treatment technology options between proposal and promulgation that are applicable to the primary aluminum subcategory. The options selected for evaluation represent a combination of in-process flow reduction, preliminary treatment technologies applicable to individual waste

streams, and end-of-pipe treatment technologies.

OPTION A

Option A for the primary aluminum subcategory requires treatment technologies to reduce the discharge of pollutant mass. The Option A treatment model consists of treatment with lime and settle (chemical precipitation and sedimentation) applied to all waste streams and oil skimming. where required. Chemical precipitation is used to remove metals and fluoride by the addition of lime followed by gravity sedimentation. Suspended solids are also removed from the process.

OPTION B

Option B for the primary aluminum subcategory consists of all treatment requirements of Option A (lime precipitation, sedimentation, and oil skimming) plus control technologies to reduce the discharge of wastewater volume and chemical precipitation with ferrous sulfate to control cyanide from cathode reprocessing wastewaters. Water recycle and reuse are the principal control mechanisms for flow reduction.

EPA considered cyanide treatment using chemical oxidation with chlorine. Although the chlorine oxidation process can be used effectively for wastewater containing predominantly free cyanides and easily oxidizable cyanide complexes, the Agency determined that precipitation with ferrous sulfate is more effective than chlorine oxidation for the removal of iron-cyanide complexes which are found in primary aluminum wastewater.

At some plants, cathode reprocessing wastewater is reused in potline wet air pollution control systems. When this occurs, the potline scrubber wastewater will exhibit treatable cyanide concentrations and would require treatment for cyanide in the same manner as the cathode reprocessing wastewater.

OPTION C

Option C for the primary aluminum subcategory consists of all control and treatment requirements of Option B (in-process flow reduction, oil skimming, cyanide precipitation with ferrous sulfate, lime precipitation, and sedimentation), plus multimedia filtration technology added at the end of the Option B treatment scheme. Multimedia filtration is used to remove suspended solids, including precipitates of metals and fluoride, beyond the concentration attainable by gravity sedimentation. The filter suggested is of the gravity, mixed media type, although other forms of filters such as rapid sand filters or pressure filters would also perform satisfactorily. The addition of filters also provides consistent removal during periods of time in which there are rapid increases in flows or loadings of pollutants to the treatment system.

OPTION E

Option E for the primary aluminum subcategory consists of Option C (in-process flow reduction, oil skimming, cyanide precipitation with ferrous sulfate, lime precipitation, sedimentation, and multimedia filtration) with the addition of activated carbon adsorption technology at the end of the Option C treatment scheme. The activated carbon process is used to remove toxic organic pollutants which remain after lime precipitation, sedimentation, and filtration.

CONTROL AND TREATMENT OPTIONS REJECTED

Three additional control and treatment options were considered prior to proposing mass limitations for this subcategory as discussed below. Activated alumina (fluoride adsorption) and reverse osmosis were rejected because they are not demonstrated in the nonferrous metals manufacturing point source category, nor are they clearly transferable. Pretreatment of certain waste streams using activated carbon was also eliminated. A pilot scale treatability study performed by the Agency after proposal demonstrated that toxic organic pollutants in primary aluminum wastewaters are substantially removed through lime, settle, and filter treatment. The findings of this study eliminated further consideration of activated carbon treatment.

FLUORIDE TREATMENT EFFECTIVENESS ANALYSIS

In settlement agreement negotiation, the Agency re-evaluated the variability factors for fluoride in the primary aluminum subcategory based on petitioners claims that the presence of complex fluoride ions and aluminum salts increase the difficulty of achieving the limitations promulgated in June 1984. The Agency has retained the long-term mean but increased the variability factors for fluoride to the pooled variability factors computed from data for seven metal pollutants in the combined metals data base (4.10 and 1.82 for the one day maximum and the monthly average of daily values variability factors, respectively). These new treatment effectiveness values for fluoride are 59.5 mg/l, maximum for any one day and 26.4 mg/l maximum monthly average of daily values.

TREATMENT EFFECTIVENESS FOR POTLINE SCRUBBER AND CATHODE REPROCESSING WASTEWATERS

The Agency evaluated industry comments after proposal and made additional studies of the treatment effectiveness of treatment technologies applied to potline air pollution control scrubber wastewater and cathode reprocessing wastewater. These studies, reported in Section V of this supplement, indicate that the nature of the wastewater matrix of these wastewaters is such that treatment effectiveness values other than those displayed in Table VII-21 of Vol 1 should be used. The Agency has elected to

develop mass discharge limitations for these two wastewater streams when they are uncomingled with any other waters based on the results of the special treatment studies. These treatment effectiveness values are summarized in Table VII-1 (page 735). When these wastewaters are comingled with other waters, the treatment effectiveness levels of Table VII-21, Vol 1 (page 248) are used.

Spent potliner leachate may receive the treatment performance values developed for cathode reprocessing and provided: (a) the permit writer determines on a case by case basis that the wastewater matrices of cathode reprocessing and spent potliner leachate are comparable; and (b) the spent potliner leachate is not commingled with process or non-process wastewaters other than cathode reprocessing or potline wet air pollution control operated in conjunction with cathode reprocessing. Spent potliner leachate resulting from atmospheric precipitation runoff is considered a site specific non-scope wastewater stream by the Agency and for this reason specific limitations are not provided in this regulation.

BENZO(A)PYRENE TREATMENT EFFECTIVENESS ANALYSIS

In settlement negotiations after promulgation, the Agency revised its statistical analysis of benzo(a)pyrene data to develop one day maximum and monthly average treatment effectiveness concentrations as a basis for calculating mass discharge limits. The recalculated treatment effectiveness concentrations are 0.0337 mg/l maximum for any one day and 0.0156 mg/l maximum monthly average of daily values. The Agency also restricted the discharge allowance for benzo(a)pyrene to those streams which actually contain this pollutant.

TABLE VII-1

TREATMENT EFFECTIVENESS FOR SELECTED BUILDING BLOCKS
Lime Settle and Filter Technology
(mg/l)

Pollutant	Mean	One-day Maximum	10-day Average	30-day Average
Acenaphthene	0.010	0.0337	0.0156	NC
Benzo(a)anthracene	0.023	0.0775	0.036	NC
*Benzo(a)pyrene	0.010	0.0337	0.0156	NC
3,4-Benzofluoranthene	0.010	0.0337	0.0156	NC
Benzo(k)fluoranthene	0.010	0.0337	0.0156	NC
Benzo(ghi)perylene	0.010	0.0337	0.0156	NC
Chrysene	0.023	0.075	0.036	NC
Dibenzo(a,h)anthracene	0.010	0.0337	0.0156	NC
Floranthene	0.114	0.384	0.178	NC
Pyrene	0.079	0.266	0.123	NC
*Antimony	2.99	12.0	5.4	NC
*Cyanide	1.1	4.5	2.0	NC
*Nickel	0.57	2.3	1.0	NC
*Aluminum	1.9	7.8	3.5	NC
*Fluoride	206	840	380	NC
*TSS	15	61.5	27.3	NC

* = Regulated Pollutant
NC = Not calculated

NOTE: These values may be used only for calculating allowances for cathode reprocessing and potline wet air pollution control wastewaters when they are not commingled with any other wastewaters.

SECTION VIII

COSTS, ENERGY, AND NONWATER QUALITY ASPECTS

This section describes the method used to develop the estimated costs associated with the control and treatment technologies discussed in Section VII for wastewaters from primary aluminum plants. The energy requirements of the considered options as well as solid waste and air pollution aspects are also discussed in this section.

Section VI indicated that significant pollutants or pollutant parameters in the primary aluminum subcategory are benzo(a) pyrene, aluminum, antimony, nickel, cyanide, fluoride, TSS, pH, and oil and grease. Metals and fluorides are most economically removed by chemical precipitation, sedimentation and filtration. These technologies also remove toxic polynuclear aromatic hydrocarbons. Cyanide concentrations can be reduced by chemical precipitation with ferrous sulfate or by ion-exchange. Activated carbon is an effective treatment for removing organics.

LEVELS OF TREATMENT CONSIDERED

As discussed in Section VII, four control and treatment options were considered for treating wastewater from the primary aluminum subcategory. Cost estimates were developed for each of these control and treatment options. Cost estimates, in the form of annual cost curves, have been developed for each of these control and treatment options, and they are presented in Section VIII of the General Development Document. The control and treatment options are presented in Figures X-1 through X-4 (pages 808 - 811).

OPTION A

Option A for the primary aluminum subcategory consists of lime precipitation and sedimentation applied to combined wastewater streams. Oil skimming is added as a preliminary treatment step to remove oil and grease from all waste streams except stationary and shot casting, potline SO_2 wet air pollution control, and degassing wet air pollution control.

OPTION B

Option B for the primary aluminum subcategory consists of all treatment requirements of Option A (lime precipitation, sedimentation, and oil skimming) plus control technologies to reduce the discharge of wastewater volume and chemical precipitation with ferrous sulfate to control cyanide from cathode reprocessing wastewaters. Water recycle and reuse are the principal control mechanisms of flow reduction. Flow reduction measures consist of recycle of contact cooling water through cooling towers and recycle of wet air pollution

control wastewater through holding tanks.

OPTION C

Option C consists of Option B (cyanide precipitation preliminary treatment, lime precipitation, sedimentation, oil skimming and in-process flow reduction) with the addition of multimedia filtration added to the end of the Option B treatment scheme.

OPTION E

Option E consists of Option C (lime precipitation, sedimentation, oil skimming, in-process flow reduction, and multimedia filtration) with the addition of activated carbon adsorption technology at the end of the Option C treatment scheme.

Cost Methodology

A detailed discussion of the methodology used to develop the compliance costs has been presented. Plant-by-plant compliance costs have been estimated for the primary aluminum subcategory. The total costs for the final primary aluminum subcategory regulation are presented in Table VIII-1 (page 757).

The major general assumptions used to develop compliance costs have been presented. Each subcategory contains a unique set of waste streams requiring certain subcategory-specific assumptions to develop compliance costs. Six major assumptions applicable specifically to the primary aluminum subcaategory are discussed briefly below.

(1) Compliance costs for oil-water separation, flow reduction via cooling towers, and lime and settle are necessary to meet the previously promulgated BPT regulation for certain waste streams. These costs are not included in the current compliance costs if the treatment is in place and of sufficient capacity. If additional capacity is required to treat waste streams not considered in the promulgated BPT regulation, the cost for this capacity is included in the compliance cost estimate.

(2) In the consideration of activated carbon adsorption as an end-of-pipe technology, each plant is analyzed to determine whether separate or combined treatment of the organic bearing and organic free waste streams is economically justified. The least costly configuration is then used to estimate compliance costs.

(3) Sludge generated by lime and settle treatment is assumed a hazardous waste when polynuclear aromatics are removed.

(4) Cyanide precipitation is included as a preliminary treatment step on cyanide-bearing wastewaters only.

These waters originate only in cathode reprocessing facilities used by four plants. Hazardous waste disposal costs were included for the sludges generated by cyanide precipitation.

(5) Capital and annual costs for plants discharging in both the primary and secondary aluminum subcategories are based on a combined treatment system and were apportioned to each subcategory on a flow-weighted basis.

(6) Capital and annual costs for plants discharging in the primary aluminum subcategory and another point source category are based on separate treatment systems since the respective regulations are based on different technologies and control different pollutants. Segregation costs are included to separate the wastewaters.

NONWATER QUALITY ASPECTS

Nonwater quality impacts specific to the primary aluminum subcategory, including energy requirements, solid waste and air pollution are discussed below.

ENERGY REQUIREMENTS

The methodology used for determining the energy requirements for the various alternatives is discussed in Section VIII of the General Development Document. Option C, which includes filtration, is estimated to consume five percent more energy than the promulgated BPT technology, while activated carbon could increase energy consumption by approximately 50 percent over BPT. Option C in a typical plant represents approximately 0.2 percent of the total plant electrical requirements. Therefore, it is concluded this regulation will have negligible effects on energy consumption.

SOLID WASTE

Sludges associated with the primary aluminum subcategory will necessarily contain toxic quantities (and concentrations) of toxic metal pollutants. Wastes generated by primary smelters and refiners are currently exempt from regulation by Act of Congress (Resource Conservation and Recovery Act (RCRA)), Section 3001(b), as presently interpreted by the Agency. Consequently, sludges generated from treating industries' wastewater are not presently subject to regulation as hazardous wastes.

If these wastes should eventually be identified or are listed as hazardous, they will come within the scope of RCRA's "cradle to grave" hazardous waste management program, requiring regulation from the point of generation to point of final disposition. EPA's generator standards would require generators of hazardous nonferrous metals manufacturing wastes to meet containerization, labeling, record keeping, and reporting requirements; if plants dispose of hazardous wastes off-site, they would have to prepare

a manifest which would track the movement of the wastes from the generator's premises to a permitted off-site treatment, storage, or disposal facility. See 40 CFR 262.20 45 FR 33142 (May 19, 1980), as amended at 45 FR 86973 (December 31, 1980). The transporter regulations require transporters of hazardous wastes to comply with the manifest system to assure that the wastes are delivered to a permitted facility. See 40 CFR 263.20 45 FR 33151 (May 19, 1980), as amended at 45 FR 86973 (December 31, 1980). Finally, RCRA regulations establish standards for hazardous waste treatment, storage, and disposal facilities allowed to receive such wastes. See 40 CFR Part 464 46 FR 2802 (January 12, 1981), 47 FR 32274 (July 26, 1982).

Even if these wastes are not identified as hazardous, they still must be disposed of in compliance with the Subtitle D open dumping standards, implementing 4004 of RCRA. See 44 FR 53438 (September 13, 1979).

Pilot-scale work performed by the Agency since proposal demonstrated that toxic polynuclear aromatic hydrocarbon pollutants found in primary aluminum wastewaters are removable using lime, settle, and filter technology. As a result, the Agency believes lime sludge from this subcategory will be toxic due to the presence of these organic contaminants. In addition, sludges generated during cyanide precipitation are expected to be hazardous under RCRA. Consequently, in developing plant-by-plant compliance costs for the primary aluminum subcategory, the Agency considered the sludges generated as hazardous. The costs of hazardous waste disposal were considered in the economic analysis, and they were determined to be economically achievable. (This is a conservative assumption since these sludges are presently subject to a statutory and regulatory exemption from hazardous waste status). It is estimated that Options B and C will generate approximately 730,000 tons/yr of waste sludge as 20 percent solids. Multimedia filtration technology will not generate any significant amount of sludge over that resulting from lime precipitation and sedimentation.

AIR POLLUTION

There is no reason to believe that any additional air pollution will result from implementation of cyanide precipitation, lime precipitation, sedimentation, filtration, reverse osmosis, and carbon adsorption. These technologies transfer pollutants to solid waste and do not involve air stripping or any other physical process likely to transfer pollutants to air. In those plants using lubricants for casting, there may be organics present in drift from cooling towers along with some particulate matter used to recycle casting contact cooling water. However, the Agency believes that the amount of organic constituents and particulate matter in the drift would not be significant.

TABLE VIII-1

COST OF COMPLIANCE FOR THE PRIMARY ALUMINUM SUBCATEGORY
DIRECT DISCHARGERS
(March 1982 Dollars, Millions)

	Proposal Cost		Promulgation Cost	
Option	Capital	Annual	Capital	Annual
A	11.1	5.3	7.5	7.9
B	33.9	21.2	14.5	9.8
C	38.3	24.5	16.0	10.5
D	47.4*	24.4*	26.2**	14.7**

* Activated carbon adsorption as a preliminary treatment.

** End-of-pipe carbon adsorption.

THIS PAGE INTENTIONALLY LEFT BLANK

SECTION IX

BEST PRACTICABLE TECHNOLOGY CURRENTLY AVAILABLE

EPA promulgated BPT limitations for the primary aluminum subcategory on April 8, 1974 as Subpart B of 40 CFR Part 421. Pollutants regulated by these limitations were fluoride, TSS, and pH. Unlike the current rulemaking, the BPT limitations were developed for the entire aluminum smelting process, not on the basis of individual wastewater streams. EPA is not promulgating any modifications to these limitations.

The following limitations establish the quantity of pollutants or pollutant properties, which may be discharged by a point source after application of the best practicable control technology currently available:

Pollutant or Pollutant Property	Maximum for Any One Day	Maximum for Monthly Average
Metric Units - kg/kkg of product English Units - lbs/1,000 lbs of product		
Fluoride	2.0	1.0
Total Suspended Solids	3.0	1.5
pH	Within the range of 6 to 9 at all times	

THIS PAGE INTENTIONALLY LEFT BLANK

SECTION X

BEST AVAILABLE TECHNOLOGY ECONOMICALLY ACHIEVABLE

The effluent limitations are based on the best control and treatment technology used by a specific point source within the industrial category or subcategory, or by another category where it is readily transferable. Emphasis is placed on additional treatment techniques applied at the end of the treatment systems currently used for BPT, as well as reduction of the amount of water used and discharged, process control, and treatment technology optimization.

The factors considered in assessing best available technology economically achievable (BAT) include the age of equipment and facilities involved, the process used, process changes, nonwater quality environmental impacts (including energy requirements), and the costs of application of such technology (Section 304(b)(2)(B) of the Clean Water Act). BAT represents the best available technology economically achievable at plants of various ages, sizes, processes, or other characteristics. Where the Agency has found the existing performance to be uniformly inadequate, BAT may be transferred from a different subcategory or category. BAT may include feasible process changes or internal controls, even when not in common industry practice.

The statutory assessment of BAT considers costs, but does not require a balancing of costs against effluent reduction benefits (see Weyerhaueser vs Costle, 590 F. 2d 1011 (D.C. Cir. 1978)). However, in assessing the proposed BAT, the Agency has given substantial weight to the economic achievability of the technology.

TECHNICAL APPROACH TO BAT

In pursuing this second round of effluent limitations and standards, the Agency reviewed a wide range of technology options and evaluated the available possibilities to ensure that the most effective and beneficial technologies were used as the basis of BAT. To accomplish this, the Agency examined four technology alternatives prior to promulgating mass limitations, which could be applied to the primary aluminum subcategory as BAT options and which would represent substantial progress toward reduction of pollutant discharges above and beyond progress achieved by BPT.

In summary, the treatment technologies considered for BAT are presented below:

Option A (Figure X-1, page 808) is based on

- Preliminary treatment with oil skimming (where required)
- Chemical precipitation and sedimentation

Option B (Figure X-2, page 809) is based on

- Preliminary treatment with oil skimming (where required)
- Preliminary treatment of cathode reprocessing wastewater with ferrous sulfate precipitation
- Chemical precipitation and sedimentation
- In-process flow reduction of casting contact cooling water and scrubber liquor resulting from anode paste plants, anode bake plants, potlines, and potrooms

Option C (Figure X-3, page 810) is based on

- Preliminary treatment with oil skimming (where required)
- Preliminary treatment of cathode reprocessing wastewater with ferrous sulfate precipitation
- Chemical precipitation and sedimentation
- In-process flow reduction of casting contact cooling water and scrubber liquor resulting from anode paste plants, anode bake plants, potlines, and potrooms
- Multimedia filtration

Option E (Figure X-4, page 811) is based on

- Preliminary treatment with oil skimming (where required)
- Preliminary treatment of cathode reprocessing wastewater with ferrous sulfate precipitation
- Chemical precipitation and sedimentation
- In-process flow reduction of casting contact cooling water and scrubber liquor resulting from anode paste plants, anode bake plants, potlines, and potrooms
- Multimedia filtration
- Activated carbon adsorption for toxic organic removal

The four options examined for BAT are discussed in greater detail on the following pages. The first option considered (Option A) is analogous to the BPT treatment which was presented in the previous section.

OPTION A

Option A for the primary aluminum subcategory is equivalent to the treatment technology that is the basis of promulgated BPT effluent limitations. The Option A treatment scheme consists of preliminary treatment of casting contact cooling water by oil skimming and chemical precipitation and sedimentation applied to the combined wastewater discharges as reported in the data collection portfolios. Although oil and grease is a conventional pollutant, oil skimming is needed for BAT to ensure proper metals removal. Oil and grease interferes with the chemical addition and mixing required for chemical precipitation treatment. Chemical precipitation is used to remove metals, toxic organics, and fluoride by the addition of lime followed by gravity sedimentation. Suspended solids are also removed from the process.

OPTION B

Option B for the primary aluminum subcategory achieves lower pollutant discharge by building upon the Option A treatment technology of oil skimming, chemical precipitation, and sedimentation (see Figure X-2, page 783). Option B uses preliminary cyanide precipitation technology to reduce cyanide concentrations and flow reduction measures to reduce the quantity of pollutants discharged.

Cyanide precipitation, based on ferrous sulfate addition, was applied only to wastewater generated from cathode reprocessing and potline scrubber liquor when cathode reprocessing was performed on-site. At some plants, cathode reprocessing wastewater is reused in potline wet air pollution control systems. When this occurs, the potline scrubber wastewater may exhibit treatable cyanide concentrations and would require treatment for cyanide in the same manner as the cathode reprocessing wastewater. Ion exchange has been demonstrated on a pilot scale in the primary aluminum industry. Performance values obtained through ion-exchange are very similar to those of the Agency's pilot scale treatability study using ferrous sulfate. Alkaline chlorination of cyanide is demonstrated at one primary aluminum plant.

Flow reduction measures, including in-process changes, result in the elimination of some wastewater streams and the concentration of pollutants in other effluents. As explained in Section VII of the General Development Document, treatment of a more concentrated effluent allows achievement of a greater net pollutant removal and introduces the possible economic benefits associated with treating a lower volume of wastewater. Methods used in Option B to reduce process wastewater generation and discharge rates are discussed on the following page.

Recycle of Anode and Casting Contact Cooling Water Through Cooling Towers

The cooling and recycle of contact cooling water is practiced by 22 of the 31 plants reporting this wastewater. The function of contact cooling water is to quickly remove heat from the newly formed anode or cast aluminum. Therefore, the principal requirements of the water are that it be cool and not contain dissolved solids at a concentration that would cause water marks or other surface imperfections. There is sufficient experience within the nonferrous metals manufacturing category with contact cooling wastewater to assure the success of this technology using cooling towers or heat exchangers (refer to Section VII of the General Development Document). Although one plant reported it did not discharge any anode quench water by reason of 100 percent recycle, a blowdown or periodic cleaning is needed to prevent a buildup of dissolved and suspended solids. (EPA has determined that a blowdown of 10 percent of the water applied in a process is adequate.)

Recycle of Water Used in Wet Air Pollution Control

There are six wastewater sources associated with wet air pollution control which are regulated under these effluent limitations:

1. Anode paste plant,
2. Anode bake plant,
3. Potline,
4. Potline SO_2,
5. Potroom, and
6. Degassing.

Table X-1 (page 782) presents the number of plants reporting wastewater use with these sources, the number of plants practicing recycle of scrubber liquor, and the range of recycle. The water scrubs particulate matter and fumes from the emissions, requiring a blowdown or periodic cleaning of scrubber liquor to prevent the buildup of dissolved and suspended solids.

OPTION C

Option C for the primary aluminum subcategory builds upon Option B by adding multimedia filtration technology to the end of the in-process flow reduction, lime precipitation, sedimentation, oil skimming, and cyanide precipitation with ferrous sulfate, considered for Option B. A schematic of this treatment technology is presented in Figure X-3 (page 784) Multimedia filtration is used to remove suspended solids, including precipitates of metals and fluoride, beyond the concentration attainable by gravity sedimentation. The filter suggested is of the gravity, mixed media type, although other forms of filters, such as rapid sand filters or pressure filters, would also perform satisfactorily.

OPTION E

Option E for the primary aluminum subcategory consists of in-process flow reduction, lime precipitation, sedimentation, oil skimming, cyanide precipitation with ferrous sulfate, and multimedia filtration, with the addition of activated carbon adsorption technology. The activated carbon process is used to increase the removal of toxic organics after lime precipitation, sedimentation, and filtration.

INDUSTRY COST AND POLLUTANT REMOVAL ESTIMATES

As one means of evaluating each technology option, EPA developed estimates of the pollutant reduction and the compliance costs associated with each option. The methodologies are described on the following page.

POLLUTANT REMOVAL ESTIMATES

A complete description of the methodology used to calculate the estimated pollutant reduction achieved by the application of the various treatment options is presented in Section X of the General Development Document. The data used for estimating pollutant removals are the same as those used to revise the compliance costs.

Sampling data collected during the field sampling program were used to characterize the major waste streams considered for regulation. At each sampled facility, the sampling data were production normalized for each unit operation (i.e., mass of pollutant generated per mass of product manufactured). This value, referred to as the raw waste, was used to estimate the mass of toxic pollutants generated within the primary aluminum subcategory. By multiplying the total industry production for a unit operation times the corresponding raw waste value, the mass of pollutant generated for that unit operation was estimated.

The volume of wastewater discharged after the application of each treatment option was estimated for each operation at each plant by comparing the actual discharge to the regulatory flow. The smaller of the two values was selected and summed with the other plant flows. The mass of pollutant discharged was then estimated by multiplying the achievable concentration values attainable by the option (mg/l) by the estimated volume of process wastewater discharged by the subcategory. The mass of pollutant removed is the difference between the estimated mass of pollutant generated within the subcategory and the mass of pollutant discharged after application of the treatment option.

The pollutant removal estimates for the direct dischargers in the primary aluminum subcategory are presented in Tables X-2 (page 783) through X-5 (page 786). Table X-2 shows the removals for the toxic organic pollutants. For inorganic pollutants, removal estimates were determined based on the long-term achievable concentration values from either the combined metals data base (CMDB) or an alternate data base developed from the pilot-scale treatability study (see Section VII). Treatment performance data gathered during the pilot-scale study demonstrated that plants operating cathode reprocessing operations and using the wastewater as makeup for potline scrubber liquor cannot achieve the performance values proposed for antimony, nickel, aluminum, fluoride, and total suspended solids. Therefore, alternate treatment performance values from the study (Table VII-1, page 752) were used to estimate pollutant removals for those primary aluminum plants that operate cathode reprocessing and commingle the resulting wastewater with potline scrubber liquor. (The treatment performance is discussed in greater detail below.) Pollutant removal estimates for plants that do not commingle cathode reprocessing wastewater and potline scrubber liquor were calculated using the CMDB based treatment effectiveness values in Table VII-21 (Vol-1 page 248). Tables X-3 and X-4 present the inorganic pollutant removal estimates using the CMDB based

treatment effectiveness and the alternate treatment effectiveness values in Table VII-1, respectively. Inorganic pollutant removal totals for all direct dischargers are presented in Table X-5.

COMPLIANCE COSTS

Compliance costs presented at proposal were estimated using cost curves, which related the total costs associated with installation and operation of wastewater treatment technologies to plant process wastewater discharge. EPA applied these curves on a per plant basis, a plant's costs--both capital, and operating and maintenance--being determined by what treatment it has in place and by its individual process wastewater discharge (from dcp). The final step was to annualize the capital costs, and to sum the annualized capital costs, and the operating and maintenance costs, yielding the cost of compliance for the subcategory. Since proposal, the cost estimation methodology was changed as discussed in Section VIII of this document. A design model and plant specific information were used to size a wastewater treatment system for each discharging facility. After completion of the design, capital and annual costs were estimated for each unit of the wastewater treatment system. Capital costs were developed from vendor quotes and annual costs were developed from literature. The revised compliance costs are presented in Table VIII-1 (page 757).

BAT OPTION SELECTION

EPA's proposed BAT was based on lime, settle, and filter technology and flow reduction, with preliminary treatment for organics and cyanide using activated carbon and ferrous sulfate precipitation, respectively. Numerous comments were received on the proposed technology stating, among other things, that the Agency did not account for the removal of toxic organics in lime and settle treatment. The transfer of cyanide precipitation and associated performance values was also contested as unachievable on primary aluminum wastewaters. The Agency performed pilot-scale work on potline scrubber blowdown and cathode reprocessing wastewater at a primary aluminum facility following proposal (see Sections V and VII). Analytical data gathered during the study indicate toxic organic pollutants present in primary aluminum wastewaters are controllable through lime, settle, and multimedia filtration treatment technology. The toxic organics, present as polynuclear aromatic hydrocarbons, are only slightly soluble in water, and thus are treatable using sedimentation and filtration techniques. Removals by this technology exceed 99 percent of all toxic organics present. In addition, the most toxic of the polynuclear aromatic hydrocarbons, including the carcinogen benzo(a)pyrene, are removed to the limit of quantification by this technology. For these reasons, the Agency does not believe it is warranted to include the use of activated carbon to remove the small amounts of these less toxic polynuclear aromatic hydrocarbons remaining after application of lime, settle, and filtration technology. At-the-source limitations for toxic organic pollutants are not appropriate because toxic organics are

effectively controlled with lime, settle, and filter treatment.

Thus, the promulgated BAT mass limitations for the primary aluminum subcategory are based on end-of-pipe lime precipitation, sedimentation, and multimedia filtration. Preliminary treatment of cyanide is based on cyanide precipitation. Treatment effectiveness values for toxic organic pollutants and for certain toxic metals (Table VII-1) are based on data from the Agency's pilot plant study. They apply to potline wet scrubber and cathode reprocessing wastewaters provided these wastewaters are not commingled with any other waters (see below). In-process flow reduction of scrubber liquors and contact cooling water through recycle is also included.

Data gathered through specific data requests show cathode reprocessing wastewaters are normally used as potline scrubber liquor make-up. An at-the-source limit for cyanide was considered to prevent dilution of potline scrubber liquor or cathode reprocessing as a means of compliance. An at-the-source limit would be appropriate if there were a risk that cyanide could be diluted to below levels detectable at the end of the pipe as a result of mixing with wastewaters that do not contain cyanide. This is not likely to occur because the waste streams containing cyanide, cathode reprocessing wastewater, and potline scrubber wastewater have very high flows. These streams would have to be diluted at roughly a 100 to one ratio for cyanide to be undetected, an unlikely result. Permit writers should investigate, however, whether this degree of dilution might occur at an individual plant (for example, if storm water is being centrally treated), in which case an at-the-source limit would be needed to ensure treatment and removal of cyanide.

The final regulation states that only the potline wet scrubber and cathode reprocessing building blocks receive a cyanide mass limitation. This effectively precludes dilution because it does not make economic sense for a plant to treat its entire flow when it can pretreat these cyanide-containing streams. (The Agency thus developed compliance costs based on cyanide pretreatment.) In addition, a mass allowance is provided for cathode reprocessing only if this operation is not conducted in conjunction with potline wet scrubbing. Where cathode reprocessing is operated along with wet potline scrubbing, an allowance is provided only for the potline scrubber because only a single flow is associated with both operations. In essence, the flow from potline scrubbing is routed to the cathode reprocessing operation for fluoride recovery, and then routed back to the potline where a blowdown is discharged. There is no independent flow from cathode reprocessing.

FINAL AMENDMENTS TO THE REGULATION

For the Primary Aluminum Subcategory, EPA promulgated final amendments on July 7, 1987 (52 FR 25552) to the regulation concerning four topics, which are briefly described here.

EPA amended the BAT limitations and NSPS and PSNS for benzo(a)pyrene in two manners: first, to incorporate variability factors into the daily maximum and monthly average limitations; and second, to only provide discharge allowances for benzo(a)pyrene to those processes which generate this substance. Further, EPA provided clarification on 2 items pertaining to regulation of benzo(a)pyrene.

EPA amended the BAT limitations and NSPS and PSNS for fluoride to be based upon the pooled variability factors calculated from data for seven metal pollutants in the CMDB, instead of the variability factors from the Electrical & Electronic Components Phase II regulation.

EPA provided brief guidance on the treatment values that permit writers may provide for spent potliner leachate, even though EPA considers spent potliner leachate to be non-process and therefore a non-scope flow.

EPA has amended the NSPS pH standards for direct chill casting contact cooling water to a range of 6.0 to 10.0 standard units at all times.

TREATMENT PERFORMANCE

Overall treatment performance for the cathode reprocessing waste stream, as well as treatment performance values for three specific pollutants, namely cyanide, benzo(a)pyrene and fluoride, are discussed here with respect to their special circumstances in the primary aluminum subcategory.

Treatment performance data gathered during the pilot-scale study demonstrated that plants operating cathode reprocessing operations and using the wastewater as makeup for potline scrubber liquor cannot achieve the performance values proposed for antimony, nickel, aluminum, fluoride, and total suspended solids. The Agency believes this is due to the matrix differences resulting from cathode reprocessing. The cathode reprocessing wastewater, and subsequently the potline scrubber liquor, contain dissolved solids levels in the five to six percent range. Therefore, the Agency is promulgating separate mass limitations for those primary aluminum plants that operate cathode reprocessing and commingle resulting wastewater with potline scrubber liquor. However, to receive these alternate limitations the plant may not dilute potline scrubber liquor blowdown or cathode reprocessing wastewater with any process or nonprocess wastewater source. If the potline scrubber blowdown is diluted with other wastewaters, the Agency believes the complexity of the matrix decreases and thus the concentrations of the combined metals data base (as well as the transferred antimony concentration) should be achieved.

In fact, a statistical analysis of untreated wastewater data shows primary aluminum wastewater to be significantly less contaminated than wastewater from the plants in the combined

metals data base.

The variability factors used to determine the mass limitations for the alternate potline scrubber blowdown and cathode reprocessing are transferred from the combined metals data base. The CMDB contains more data points than the pilot-scale study and thus is a better source for determining variability for lime and settle treatment.

While not considered a process wastewater stream, EPA has provided guidance to permit writing authorities that spent potliner leachate, resulting from either the stockpiling or the landfilling of spent potliners, may also receive the alternate treatment performance values developed for cathode reprocessing or potline scrubber liquor commingled with cathode reprocessing wastewaters. This guidance is appropriate if the permit writer determines on a case-by-case basis that the wastewater matrices of cathode reprocessing and spent potliner leachate are comparable and the spent potliner leachate is not commingled with process or nonprocess wastewaters other than cathode reprocessing or potline wet air pollution control operated in conjunction with cathode reprocessing.

The Agency's pilot-scale treatment performance studies also revealed performance limits for cyanide precipitation are not transferable from coil coating to primary aluminum wastewater. The Agency believes the cathode reprocessing operations discharge much higher concentrations of cyanide than observed in coil coating and impair treatment by also discharging extremely high dissolved solids concentrations (five to six percent) that interfere with precipitation chemistry. Therefore, treatment effectiveness is based on the Agency's pilot study of these wastewaters. This mean was also shown, in data submitted by a primary aluminum facility, to be achievable by ion exchange technology applied to cyanide-contaminated groundwater. In developing variability factors for cyanide precipitation technology, the mean variability from the combined metals data base is used because only two data points were generated by the treatability study.

The Agency has re-evaluated the treatment performance for benzo(a)pyrene and has concluded that there is some variability in treatment of this compound, and that, in addition, the model treatment technology, lime, settle and filter also has some associated operating variability. As such, EPA has changed the benzo(a)pyrene effluent limitations and standards by increasing the daily maximum from 0.010 mg/l to 0.0337 mg/l and by adding a monthly maximum average of 0.0156 mg/l. These limitations were determined on the basis of a statistical analysis of data on the treatability of benzo(a)pyrene obtained in the pilot study referenced above.

As a result of these changes, the allowances for benzo(a)pyrene are only applicable to those processes that generate it. Therefore, no discharge allowance will be provided for

benzo(a)pyrene in the degreasing wet air pollution control, direct chill casting contact cooling and continuous rod casting contact cooling building blocks.

The clarification that EPA has provided is twofold: the rule does not mandate at-the-source limitations for benzo(a)pyrene, and analytical values at or below the detection limit for any EPA-approved analytical method will be counted as zeroes for purposes of determining compliance.

The Agency has re-evaluated lime and settle technology performance for fluoride removal. The proposed treatment performance for fluoride was transferred from the electrical and electronic component manufacturing (phase II) lime and settle mean performance. Because of the presence of complex fluoride ions and aluminum salts in the primary aluminum subcategory wastewaters, petitioners to the promulgated regulation claimed that the fluoride limitations are not achievable. EPA is thus retaining the long-term mean but increasing the variability factors for fluoride (49 FR 8751, 8757). The revised promulgated limitations are based on the pooled variability factors calculated from data for seven metal pollutants in the combined metals data base. The variability factors used are 4.10 and 1.82 for daily and monthly variability factors, respectively, as opposed to the values 2.40 and 1.3 which were used for the March 1984 promulgation. These new variability factors change the one-day and monthly treatment effectiveness values to those shown in Table VII-21 (page 248, Vol-1).For the primary aluminum subcategory, the one-day and monthly treatment effectiveness for fluoride become 59.5 and 26.4 mg/l, respectively. The Agency believes that the variability associated with the metals data will more accurately represent the fluoride variability in this subcategory.

WASTEWATER DISCHARGE RATES

Important production operations that precede and follow reduction are anode paste preparation and baking, anode cooling, cathode manufacturing, and degassing and casting of molten aluminum. At some primary aluminum plants, spent cathodes are reprocessed to recover cryolite. All of these operations are potential sources of wastewater and are evaluated to establish effluent limitations for the primary aluminum subcategory.

Specific wastewater streams associated with the primary aluminum subcategory are discharges from air pollution emission control devices for the paste plant, anode bake plant, potline, potroom, and degassing and those from green anode and briquette contact cooling, casting contact cooling, cathode reprocessing, and pot repair-pot soaking. Table X-6 (page 787) lists the production normalized wastewater discharge rates allocated at BAT for these wastewater streams. The values represent the best existing practices of the subcategory, as determined from the analysis of data collection portfolios and data gathered through comments.

ANODE AND CATHODE PASTE PLANT WET AIR POLLUTION CONTROL WASTEWATER

The BAT wastewater discharge rate at proposal for anode paste plant wet air pollution control was 103.0 l/kkg (24.7 gallons/ton) of paste produced. This rate was allocated for the users of wet air pollution control devices to control particulates emanating from the handling of coke and pitch during anode paste preparation. Of the 29 plants reporting on-site paste preparation, 22 use dry control devices. Four plants use water scrubbers, while one does not have any emission control devices. All of the plants with water scrubbers are once-through dischargers. The BAT discharge rate at proposal for this stream was based on 90 percent recycle or reuse of the average water use of the four plants.

Data submitted through comments and gathered through specific data requests were used to re-evaluate the proposed anode paste plant wet air pollution control flow allowance. The same four plants considered at proposal are used to calculate the flow allowance at primulgation. The promulgated BAT discharge rate for this stream is based on 90 percent recycle or reuse of the average water use of the four plants. Using the data presented in Table V-1 (page 653) the flow allowance is calculated as 136 l/kkg (33 gal/ton) of paste produced.

The scope of this wastewater stream has also been expanded. After proposal, it was demonstrated to the Agency that scrubbers used to control particulate and gaseous emissions from cathode paste plants are similar to anode paste plant scrubbers. Flow and production relationships between these operations are essentially identical.

ANODE BAKE PLANT WET AIR POLLUTION CONTROL WASTEWATER

The BAT wastewater discharge rate at proposal for anode bake plant wet air pollution control was 49.4 l/kkg (11.9 gallons/ton) of anode baked. The rate was allocated only for those plants with wet air pollution control devices. Of the 19 anode baking operations reported, eight plants were thought to use water for emission control. The BAT discharge rate used at proposal was based on 90 percent recycle of the water used at two plants with the lowest water usage.

After proposal, numerous data were received by the Agency indicating that baking operations from plant to plant are not consistent and are fundamentally different. As described in Section III, three different types of anode bake furnaces are used: 1) open top ring furnace, 2) closed top ring furnace, and 3) tunnel kiln. Differences in the furnaces create different air pollution control requirements due to variations in the volumes of air produced and organic loadings. Production normalized water discharge, scrubber type, and furnace type are presented in

Table V-3 (page 656). As shown, water discharge varies dramatically with furnace type and scrubber type. Therefore, four different flow allowances are used for this waste stream:

1. Tunnel kilns (1,138 l/kkg, based on 90 percent recycle at plant 342);
2. Closed top ring furnaces (4,324 l/kkg, based on 90 percent recycle at plant 343);
3. Open top ring furnaces with spray towers only (50 l/kkg, based on 90 percent recycle at plant 364); and
4. Open top ring furnaces with spray towers and wet electrostatic precipitators (730 l/kkg, based on actual discharge at plant 354).

Plant 371 operates a wet ESP and falls between allowances three and four. The Agency believes allowance number four is more appropriate for this plant since allowance number three would require the plant to increase its recycle rate to 99+. Plant 371 currently complies with allowance number four.

ANODE CONTACT COOLING AND BRIQUETTE QUENCHING WATER

The BAT discharge rate at proposal for the anode contact cooling waste stream was 621 l/kkg (149 gallons/ton) of anode cast. This was equivalent to 90 percent recycle at the two known discharging plants (based upon average water use). Four of the thirty-one primary aluminum facilities were thought to generate this wastewater stream. Information on water discharged and recycled was not available for one of the four plants. The two remaining plants are direct dischargers and do not practice recycle. The fourth plant reported 100 percent recycle of anode contact cooling water. Wastewater rates considered at proposal are presented in Section V of this supplement.

Data and information collected through comments and specific requests for information have been used to re-evaluate the proposal anode contact cooling flow allowance. Many commenters requested the Agency provide a discharge allowance for briquette quenching since it is a similar operation to anode contact cooling. In both operations, unbaked anodes and briquettes are water cooled to facilitate handling. The principal difference between the two is size. Production normalized water usage rates for briquette quenching compare favorably with anode contact cooling, and thus they are included in the flow allowance. Table V-5 (page 665) presents the production normalized discharge rates for the 11 plants known to use contact cooling water to cool anodes or briquettes.

Data presented in Table V-5 indicate plants 345 and 349 use an inordinately large volume of cooling water when compared to the other production normalized water usage discharge rates. Excluding these two plants yields an average water usage of 2,090 l/kkg. The promulgated BAT is based on 90 percent recycle, or 209 l/kkg (50 gal/ton).

CATHODE MANUFACTURING

EPA has determined that this operation, for which a discharge allowance was proposed, does not exist.

At proposal, wastewater from cathode manufacturing was thought to be the discharge from wet ball milling. The Aluminum Association has supplied information and data to the Agency indicating this wastewater source, as described, does not exist. For those plants listed in the supplemental development document with this wastewater source, the Aluminum Association has presented the actual use of water in manufacturing cathode paste:

Plant	Water Use
340	Bearing cooling water
346	Bearing cooling water
349	Soaking of potliners
365	Cathode paste plant wet air pollution control

Thus, only the scrubber liquor at plant 369 and pot repair wastewater at plant 349 are considered process wastewater. Correspondence with the corporate office for plant 365 states that plant 369 also has a scrubbing system for the manufacture of cathode paste.

At these two plants coal-tar paste is manufactured to seal the seams of pre-purchased cathodes. During mixing of the paste, hydrocarbons are emitted and captured with wet scrubbers. This operation is very similar to anode paste manufacture and its air pollution control systems. Because the manufacture of cathode paste is similar to manufacturing anode paste and the water usage rates are similar, the anode paste plant wet air pollution control allowance is redefined as anode and cathode paste plant wet air pollution control.

CATHODE REPROCESSING

The BAT wastewater discharge rate at proposal for cathode reprocessing was 952 l/kkg (228 gal/ton) of aluminum reduced from electrolytic reduction. There were five plants in the primary aluminum subcategory thought to generate wastewater when reprocessing cathodes. None of these plants reported their recycle or reuse practices for this waste stream. The BAT discharge allowance was determined from an average of the five reported discharge rates. The discharge rates ranged from 169 l/kkg to 1480 l/kkg.

Data gathered through specific data requests after proposal indicate the flow allowance required for cathode reprocessing wastewaters was overstated. Plants operating potline wet

scrubbers and cathode reprocessing commingle the two streams to recover the fluoride as cryolite. Discharge from cryolite recovery is then returned to the potline circuit and used as scrubber liquor. Thus, the bleed from cathode reprocessing is accomplished with the potline scrubber bleed. There is no independent discharge from cathode reprocessing, and so the flow allowance provided is for the potline scrubber bleed. Plants with cathode reprocessing were included in determining the potline scrubber flow allowances. A cathode reprocessing flow allowance is provided in the regulation, but it only applies to those plants operating dry potline scrubbers (and so not using cathode reprocessing bleed as makeup for wet scrubber).

The Agency has also changed the production normalizing parameter for cathode reprocessing from aluminum produced to cryolite recovered. In this way, a plant may obtain spent potliners from another facility and still be able to comply with the promulgated mass limitations.

A flow allowance of 35,028 l/kkg of cryolite recovered is selected for those plants operating cathode reprocessing and dry potline scrubbers. This flow allowance is currently demonstrated at one primary aluminum facility using dry scrubbing. This value was selected because the other three plants, which reported much larger discharge rates, reuse the blowdown in the potline scrubber circuit.

POTLINE WET AIR POLLUTION CONTROL WASTEWATER

The BAT wastewater discharge rate at proposal for the potline air scrubbing stream was 838 l/kkg (201 gallons/ton) of aluminum produced from electrolytic reduction. Emissions from potline reduction operations are controlled by dry or wet processes. Common dry methods involve sorption of fluorine gases on alumina followed by fabric filtration for particulate removal. Since 1973, significant progress has been made toward effluent reduction through the conversion of wet emission control devices to dry processes. Of the 31 plants surveyed at proposal, there were still 11 plants using wet processes, including one plant with no discharge; four plants using a recirculation or recycle system, with discharges ranging from 592 l/kkg (142 gallons/ton) to 1,147 l/kkg (277 gallons/ton); and 6 plants with a once-through system with discharges ranging from 20,210 l/kkg (224 gallons/ton) to 59,200 l/kkg (14,000 gallons/ton). Zero discharge at one plant was accomplished by complete recycle and reuse of treated wastewater. The proposed BAT discharge rate for the potline air scrubbing system was based on the average discharge rate of the four plants with recycle rates ranging from 91 to 99 percent.

After proposing the flow allowance, the Agency examined water usage as it relates to scrubber type and cell technology. No obvious trends were apparent, so the flow allowance was not adjusted. In addition, no data or information were received indicating the production normalized flows used to calculate the

flow allowance had changed. Therefore, the Agency has promulgated the flow allowance for potline wet air pollution control as proposed.

Data and information were received indicating that two plants have recently installed dry potline scrubbing, leaving nine plants with wet scrubbers. Of these nine plants, two plants have not reported sufficient data to determine water usage and recycle practices. Six plants have recycle rates ranging from 88 to 100 percent, while the last plant does not practice recycle.

POTLINE SO_2 WET AIR POLLUTION CONTROL

A flow allowance has been added for scrubbers used to control sulfur emissions from potlines. Currently there are two plants operating scrubbers to control SO_2 emissions from potlines, which are preceded by dry fluoride scrubbers using alumina. The production normalized discharge rates for these two scrubbers are 1,430 l/kkg (343 gal/ton) and 1,250 l/kkg (300 gal/ton) of aluminum production. Recycle rates are reported as 77 and 75 percent, respectively. The discharge allowance is based on the average of the two values: 1,340 l/kkg (321 gal/ton).

Sulfur dioxide in these two scrubbers is transferred from the gas phase to the liquid phase using sodium carbonate as a scrubbing medium. Requiring 90 percent recycle for these two scrubbers is not appropriate due to the intricate chemistry involved. Sodium scrubbers such as these are normally designed to operate at a TDS level of five percent. By convention, a sodium scrubbing system is considered to be operating in the concentrated mode when the TDS concentration in the recirculation stream is about five percent. The two plants in the primary aluminum subcategory with sodium scrubbers operate at a TDS concentration of 10 percent. Increasing the recycle rate at these two plants will necessarily increase TDS which will affect scrubber performance. At higher recycle rates, mass transfer capabilities are reduced and equilibrium within the scrubber liquor may shift, liberating sulfur dioxide gas.

Makeup water is added to the scrubbing circuit to control the TDS level. Consequently, blowdown from the circuit results from excess water in the system.

POTROOM WET AIR POLLUTION CONTROL WASTEWATER

The BAT wastewater discharge rate at proposal for the potroom air scrubbing stream was 1,305 l/kkg (314 gallons/ton) of aluminum produced from electrolytic reduction. This rate was allocated only for plants using wet air pollution control devices for potroom emissions. Of the 31 plants surveyed at proposal, eight practiced potroom emission control either to supplement the potline gas cleaning system or as the only means of controlling emissions from the reduction area. All of these plants used some form of wet scrubbing. Wastewater discharge rates varied considerably among these plants, ranging from 0 to 227,700 l/kkg

(54,600 gal/ton). The dcp data indicated that the presence of potline scrubbing is not a factor contributing to the large variations of potroom scrubber water used and discharged. The proposed BAT discharge rate was based on the average of the discharge rates of the four plants with recycle systems.

Additional data collected and received after proposing the potroom scrubber flow allowance have been used to re-evaluate the allowance. The Agency has learned that plant 349 reported water usage for experimental foam scrubbers. Water usage of the foam scrubber and spray towers are not expected to be similar; this is clearly demonstrated in the reported values.

Updated flow and production data were also received for plants 359 and 360. The new dcp submitted by these two plants indicate they have installed recycle systems and use horizontal tunnel roof scrubbers with spray systems. However, plant 360 uses an inordinately large amount of scrubber liquor when compared to plant 359 and the other plants. Discharge rates for potroom wet air pollution control are presented in Table V-12 (page 674). The promulgated discharge allowance is based on the average discharge rates at plants 354, 359, 364, and 353 adjusted to 90 percent recycle. Thus, the flow allowance for potroom wet air pollution control is 1,660 l/kkg (398 gal/ton) of aluminum reduction production.

POT REPAIR AND POT SOAKING

A flow allowance for pot repair and pot soaking water was not provided in the proposed mass limitations because the Agency believed this stream was site specific. The Agency has given this stream further attention, however, due to industry requesting a flow allowance. Data gathered through Section 308 requests found five plants discharging this wastewater. Data submitted to support the Aluminum Association's report entitled Aluminum Industry Wastewater Survey indicates a sixth plant discharges this waste stream. A seventh plant has also been identified through information supplied in the dcp. The Agency believes this waste stream is present subcategory-wide because each plant must repair pots and remove potliners (cathodes). The complete recycle of this stream was reported by three plants. The belief that this process can be operated with no discharge has been confirmed through conversations with industry personnel. Water is used primarily to soften the liner so that it can be removed. The Agency is unaware of any water quality restraints restricting the reuse of this water. Therefore, a zero discharge allowance is established for this waste stream based on 100 percent reuse.

DEGASSING WET AIR POLLUTION CONTROL

No BAT discharge allowance was provided for degassing scrubber wastewater in the proposed mass limitation. The Agency believed many plants had eliminated the need for degassing scrubbers by

using alternative fluxing methods. These alternative fluxing methods reduce chlorine fumes released in the operation and subsequently eliminate the need to remove fumes from the off-gases to comply with opacity requirements.

However, it has been demonstrated to the Agency that extensive retrofits would be required to install alternate in-line fluxing and filtering. Consequently, the Agency has withdrawn the zero discharge requirement and provided a discharge allowance based on the average reported water usage rates. The BAT discharge rate is 2,609 l/kkg (626 gal/ton) of aluminum refined. Flow reduction has not been included for this stream due to the nature of the fume being scrubbed. Essentially, chlorine water will be formed and recycle methods reducing chlorine concentrations are not readily available. Aeration could be used to reduce the chlorine concentration prior to recycle; however, this would only transfer the point source from one part of the plant to another.

DIRECT CHILL CASTING CONTACT COOLING

Direct chill casting practices and the wastewater discharge from this operation are similar in the aluminum forming and primary aluminum reduction plants. The data available do not indicate any significant difference in the amount of water required for direct chill casting in a primary aluminum or aluminum forming plant. For this reason, available wastewater data were considered together, regardless of the affiliated category, in establishing BAT effluent limitations.

In all, 27 primary aluminum plants and 61 aluminum forming plants were considered to have direct chill casting operations at proposal. Recycle of the contact cooling water is practiced at 30 aluminum forming and 18 primary aluminum plants. Of these, 12 plants indicated that total recycle of this stream made it possible to avoid any discharge of wastewater; however, the majority of the plants discharge a bleed stream. The discharge flow for this operation was based on the average of the best, which was the average normalized discharge flow of the 29 plants that practice recycle greater than 90 percent. That flow was 1,999 l/kkg (479 gal/ton) of aluminum product from direct chill casting.

Evaluation of the flow allowance user at proposal revealed a mistake in the calculation methodology. A plant practicing only 54 percent recycle was inadvertently included in the determination of the flow rate. In addition, several primary aluminum facilities were contacted to clarify dcp responses on casting methods. Data from the aluminum forming and primary aluminum facilities were pooled together and those discharging plants practicing 90 percent recycle or greater (but not 100 percent recycle) were averaged to determine the flow allowance of 1,329 l/kkg (319 gal/ton) of aluminum cast.

CONTINUOUS ROD CASTING CONTACT COOLING

The BAT discharge allowance at proposal for continuous rod casting contact cooling stream was 104 l/kkg (25.0 gal/ton) of aluminum product from rod casting. This discharge flow was a reduction of the BPT discharge flow used in aluminum forming based on primary aluminum and aluminum forming plants using recycle. Two of the five primary aluminum plants thought to have continuous rod casting reported recycle, one plant only periodically discharges the stream, the other plant recycles 99 percent. Also, 17 aluminum forming plants, which recycle a similar type of cooling stream from direct chill casting, reported recycle rates of 92 to nearly 100 percent.

No information or data were received by the Agency after proposal indicating the flow allowance is inappropriate. Therefore, the continuous rod casting flow allowance is equivalent to that proposed.

STATIONARY CASTING CONTACT COOLING

In the stationary casting method, molten aluminum is poured into cast iron molds and generally allowed to air cool. EPA is aware that spray quenching is used to quickly cool the molten aluminum once cast into the molds; however, the water is evaporated as it contacts the molten metal. As such, there is no basis for providing a pollutant discharge allowance.

SHOT CASTING CONTACT COOLING

Although shot manufacture is not prevalent in the primary aluminum subcategory, it appears there is one plant manufacturing shot. The BAT discharge rate for shot casting is based on the demonstrated water use in the secondary aluminum subcategory. The shot casting operation in the primary aluminum subcategory is identical to those in the secondary aluminum subcategory. Therefore, water use and discharge rates are analogous.

Through specific information requests the Agency has found zero discharge of shot casting cooling water demonstrated at two secondary aluminum facilities (of the four reporting this operation). Both of these plants reported no product quality constraints due to 100 percent recycle. Based on the demonstrated zero discharge practices for shot casting the flow allowance requires zero discharge of process wastewater pollutants.

REGULATED POLLUTANT PARAMETERS

The Agency placed particular emphasis on the toxic pollutants. The raw wastewater concentrations from individual operations and the subcategory as a whole were examined to select certain pollutants and pollutant parameters for consideration for limitation. This examination and evaluation, presented in Section VI, concluded that 23 toxic pollutants are present in

primary aluminum wastewaters at concentrations that can be effectively reduced by identified treatment technologies.

However, the cost associated with analysis for toxic metal pollutants has prompted EPA to develop an alternative method for regulating and monitoring toxic pollutant discharges from the nonferrous metals manufacturing category. Rather than developing specific effluent mass limitations and standards for each of the toxic metals found in treatable concentrations in the raw wastewater from a given subcategory, the Agency is promulgating effluent mass limitations only for those pollutants generated in the greatest quantities as shown by the pollutant removal estimates. The pollutants selected for specific limitation are listed below:

73. benzo(a)pyrene
114. antimony
121. cyanide
124. nickel

By establishing limitations and standards for certain toxic pollutants, dischargers will attain the same degree of control over toxic pollutants as they would have been required to achieve had all the toxic pollutants been directly limited.

This approach is justified technically since the treatment performance concentrations used for lime precipitation and sedimentation technology are based on optimized treatment for concomitant multiple metals removal. Thus, even though metals have somewhat different theoretical solubilities, they will be removed at very nearly the same rate in a lime precipitation and sedimentation treatment system operated for multiple metals removal. Filtration as part of the technology basis is likewise justified because this technology removes metals non-preferentially.

The performance values used for toxic organic pollutants were determined in pilot scale treatability tests performed at a primary aluminum plant. Data from the study indicate toxic organic pollutants can be reduced to concentrations equal to or below the quantification limits for those pollutants. The Agency has selected benzo(a)pyrene as the only organic for limitation.

Benzo(a)pyrene is the most toxic of the polynuclear aromatic hydrocarbons selected in Section VI. Each toxic organic pollutant selected in Section VI was found removable in the pilot scale treatability study using lime, settle, and filtration treatment. Therefore, limiting benzo(a)pyrene will effectively control the other toxic organic pollutants present at treatable concentrations. Those pollutants effectively controlled by the limitation of benzo(a)pyrene include:

1. acenaphthene
39. fluoranthene
55. naphthalene

72. benzo(a)anthracene
76. chrysene
78. anthracene (a)
79. benzo(ghi)perylene
80. fluorene
81. phenanthrene (a)
82. dibenzo(a,h)anthracene
84. pyrene

(a) -- reported together

The discharge allowance for benzo(a)pyrene applies only to those processes that generate it. For those processes where benzo(a)pyrene is not present, no discharge allowance has been provided for benzo(a)pyrene. This means that in calculating effluent limitations at the end of a combined treatment system, no allowance for benzo(a)pyrene may be included for these processes. In addition, monitoring of benzo(a)pyrene from these processes (at-the-source) will not be required. However, monitoring could be required at the discretion of the permitting or control authority. EPA has also amended the specialized definition in §421.21 to state that if a permittee chooses to analyze for benzo(a)pyrene using any EPA - approved analytical method, any non-detected values will be counted as zeros for the purpose of determining compliance. This approach is consistent with the methodology outlined in Section V for developing the benzo(a)pyrene limitations. The methodology used to develop the limitations treated the non-detected values from the pilot plant study as zeros. The detection limit for the approved EPA methods of GC/MS and gas chromatography are 0.0025 and 0.01 mg/l, respectively.

The toxic metal pollutants selected for specific limitation in the primary aluminum subcategory to control the discharges of toxic metal pollutants are antimony and nickel. Cyanide is also selected for limitation since the methods used to control antimony and nickel are not effective in the control of cyanide. The following toxic pollutants are excluded from limitation on the basis that they are effectively controlled by the limitations developed for antimony and nickel:

115. arsenic
116. asbestos
118. cadmium
119. chromium
120. copper
122. lead
125. selenium
128. zinc

EFFLUENT LIMITATIONS

The treatment effectiveness concentrations achievable by application of the BAT treatment technology are discussed in Section VII of this supplement. The achievable concentrations

(both one-day maximum and monthly average values) are multiplied by the BAT normalized discharge flows summarized in Table X-6 (page 787) to calculate the mass of pollutants allowed to be discharged per mass of product. The results of these calculations in milligrams of pollutant per kilogram of product represent the BAT effluent limitations and are presented in Table X-7 (page 789) for each individual waste stream.

Daily maximum and monthly average treatment effectiveness concentrations are provided for eleven toxic organic and seven metallic pollutants that are effectively controlled by the control of benzo(a)pyrene, antimony and nickel. These values are displayed in Table VII-1 (page 752) for the convenience of permit writers. While these pollutants are not specifically limited by the primary aluminum limitations and standards, permit writers may elect to include some or all of these pollutants in specific permits.

TABLE X-1

CURRENT RECYCLE PRACTICES WITHIN THE PRIMARY ALUMINUM SUBCATEGORY

	No. of Plants With Wastewater	No. of Plants Practicing Recycle	Range of Recycle Values (%)
Anode Paste Plant	4	0	-
Anode Bake Plant	5	2	91 - 99
Potline	9	6	88 - 100
Potroom	8	6	42 - 99
Degassing	4	0	-

Table X-2

POLLUTANT REMOVAL ESTIMATES FOR PRIMARY ALUMINUM DIRECT DISCHARGERS
TOXIC ORGANICS

POLLUTANT	TOTAL RAW WASTE (kg/yr)	OPTION B DISCHARGED (kg/yr)	OPTION B REMOVED (kg/yr)	OPTION C DISCHARGED (kg/yr)	OPTION C REMOVED (kg/yr)	OPTION E DISCHARGED (kg/yr)	OPTION E REMOVED (kg/yr)
Acenaphthylene	5.8	5.8	0.0	5.8	0.0	5.8	0.0
Acenaphthene	7,294.5	52.0	7,242.5	52.0	7,242.5	52.0	7,242.5
Benzo(a)pyrene	16,720.7	104.0	16,616.6	52.0	16,668.6	52.0	16,668.6
Benzo(g,h,i)perylene	5,596.2	52.0	5,544.2	52.0	5,544.2	52.0	5,544.2
Benzo(k)/Benzo(b)fluoranthene	7,190.9	104.0	7,086.8	52.0	7,138.8	52.0	7,138.8
Benzo(a)anthracene/Chrysene	34,994.6	208.0	34,786.6	104.0	34,890.6	52.0	34,942.6
Dibenzo(a,h)anthracene	2,555.1	52.0	2,503.0	52.0	2,503.0	52.0	2,503.0
Fluoranthene	43,532.1	884.2	42,647.9	572.1	42,960.0	52.0	43,480.1
Fluorene	1,749.0	52.0	1,697.0	52.0	1,697.0	52.0	1,697.0
Indeno(1,2,3-c,d)pyrene	5,892.8	884.2	5,008.6	572.1	5,320.7	52.0	5,840.8
Phenanthrene/Anthracene	19,017.4	52.0	18,965.4	52.0	18,965.4	52.0	18,965.4
Pyrene	15,321.3	572.1	14,749.2	416.1	14,905.2	52.0	15,269.3
TOTAL TOXIC ORGANICS	159,870.4	3,022.4	156,848.0	2,034.2	157,836.2	577.9	159,292.4
FLOW (1/yr)		5,201,000,000		5,201,000,000		5,201,000,000	

NOTE: OPTION B = Lime Precipitation, Sedimentation, Oil Skimming, In-process Flow Reduction, and Cyanide Precipitation
OPTION C = Option B, plus Multimedia Filtration
OPTION E = Option C, plus Activated Carbon Adsorption

Table X-3

POLLUTANT REMOVAL ESTIMATES FOR PRIMARY ALUMINUM DIRECT DISCHARGERS
INORGANICS - COMBINED METALS DATA BASE (CMDB)

POLLUTANT	TOTAL RAW WASTE (kg/yr)	OPTION B DISCHARGED (kg/yr)	OPTION B REMOVED (kg/yr)	OPTION C DISCHARGED (kg/yr)	OPTION C REMOVED (kg/yr)
Antimony	11,202.0	4,048.1	7,153.9	2,718.0	8,484.0
Arsenic	1,882.0	1,882.0	0.0	1,882.0	0.0
Cadmium	388.8	388.8	0.0	283.4	105.4
Chromium	1,090.2	485.8	604.5	404.8	685.4
Copper	2,560.8	2,560.8	0.0	2,255.4	305.4
Lead	1,403.4	694.0	709.4	462.6	940.8
Nickel	39,481.8	4,279.4	35,202.4	1,272.3	38,209.6
Selenium	2,331.4	1,734.9	596.5	1,156.6	1,174.8
Thallium	419.1	419.1	0.0	419.1	0.0
Zinc	9,208.3	1,908.4	7,299.9	1,330.1	7,878.2
TOTAL TOXIC METALS	69,967.8	18,401.2	51,566.6	12,184.2	57,783.6
Cyanide	44,522.1	1,215.8	43,306.3	1,215.8	43,306.3
TOTAL TOXICS	114,489.9	31,702.1	82,787.9	18,545.5	95,944.4
Aluminum	1,616,658.8	12,953.9	1,603,704.8	8,616.7	1,608,042.1
Fluoride	3,665,283.7	83,853.5	3,581,430.2	83,853.5	3,581,430.2
TOTAL NONCONVENTIONALS	5,281,942.5	96,807.4	5,185,135.1	92,470.2	5,189,472.3
TSS	20,521,523.7	69,396.0	20,452,127.7	15,035.8	20,506,487.9
Oil & Grease	1,071,433.1	57,830.0	1,013,603.1	57,830.0	1,013,603.1
TOTAL CONVENTIONALS	21,592,956.9	127,226.0	21,465,730.9	72,865.8	21,520,091.1
TOTAL POLLUTANTS	26,989,389.3	255,735.5	26,733,653.8	183,881.5	26,805,507.8
FLOW (l/yr)		5,783,000,000		5,783,000,000	

NOTE: TOTAL TOXIC METALS = Antimony + Arsenic + Cadmium + Chromium + Copper + Lead + Nickel + Selenium + Thallium + Zinc
TOTAL TOXICS = Cyanide + Total Toxic Metals
TOTAL NONCONVENTIONALS = Aluminum + Fluoride
TOTAL CONVENTIONALS = TSS and Oil and Grease
TOTAL POLLUTANTS = Total Toxics + Total Nonconventionals + Total Conventionals

OPTION B = Lime Precipitation, Sedimentation, Oil Skimming, In-process Flow Reduction, and Cyanide Precipitation
OPTION C = Option B, plus Multimedia Filtration

Table X-4

POLLUTANT REMOVAL ESTIMATES FOR PRIMARY ALUMINUM DIRECT DISCHARGERS
INORGANICS - ALTERNATE DATA BASE

POLLUTANT	TOTAL RAW WASTE (kg/yr)	OPTION B DISCHARGED (kg/yr)	OPTION B REMOVED (kg/yr)	OPTION C DISCHARGED (kg/yr)	OPTION C REMOVED (kg/yr)
Antimony	97.3	97.3	0.0	97.3	0.0
Arsenic	144.2	74.5	69.7	49.6	94.5
Cadmium	8.7	8.7	0.0	7.2	1.5
Chromium	1.7	1.7	0.0	1.7	0.0
Copper	11.3	11.3	0.0	11.3	0.0
Lead	46.9	17.5	29.4	11.7	35.2
Nickel	38.2	38.2	0.0	38.2	0.0
Selenium	121.6	43.8	77.8	29.2	92.4
Thallium	67.7	67.7	0.0	49.6	18.1
Zinc	10.2	10.2	0.0	10.2	0.0
TOTAL TOXIC METAL	547.8	370.9	176.9	306.1	241.7
Cyanide	17,490.0	335.8	17,154.2	160.6	17,329.4
TOTAL TOXICS	18,037.8	706.7	17,331.0	466.7	17,571.1
Fluoride	72,078.9	30,952.0	41,126.9	30,076.0	42,002.9
TOTAL NONCONVENTIONALS	72,078.9	30,952.0	41,126.9	30,076.0	42,002.9
TSS	112,894.6	11,972.0	100,922.6	2,190.0	110,704.6
Oil & Grease	9,378.9	1,460.0	7,918.9	1,460.0	7,918.9
TOTAL CONVENTIONALS	122,273.5	13,432.0	108,841.5	3,650.0	118,623.5
TOTAL POLLUTANTS	212,390.2	45,090.7	167,299.4	34,192.7	178,197.5
FLOW (l/yr)		146,000,000		146,000,000	

NOTE: TOTAL TOXIC METALS = Antimony + Arsenic + Cadmium + Chromium + Copper + Lead + Nickel + Selenium + Thallium + Zinc
TOTAL TOXICS = Total Toxic Metals + Cyanide
TOTAL NONCONVENTIONALS = Fluoride
TOTAL CONVENTIONALS = TSS + Oil & Grease
TOTAL POLLUTANTS = Total Toxics + Total Nonconventionals + Total Conventionals

OPTION B = Lime Precipitation, Sedimentation, Oil Skimming, In-process Flow Reduction, and Cyanide Precipitation
OPTION C = Option, plus Multimedia Filtration

Table X-5

POLLUTANT REMOVAL ESTIMATES FOR PRIMARY ALUMINUM
INORGANICS - TOTAL

POLLUTANT	TOTAL RAW WASTE (kg/yr)	OPTION B DISCHARGED (kg/yr)	OPTION B REMOVED (kg/yr)	OPTION C DISCHARGED (kg/yr)	OPTION C REMOVED (kg/yr)
Antimony	11,299.2	4,145.4	7,153.9	2,815.3	8,484.0
Arsenic	2,026.1	1,956.4	69.7	1,931.6	94.5
Cadmium	397.5	397.5	0.0	290.5	106.9
Chromium	1,092.0	487.5	604.5	406.5	685.4
Copper	2,572.1	2,572.1	0.0	2,266.7	305.4
Lead	1,450.3	711.5	738.8	474.3	976.0
Nickel	39,520.0	4,317.6	35,202.4	1,310.5	38,209.6
Selenium	2,453.0	1,778.7	674.3	1,185.8	1,267.2
Thallium	486.8	486.8	0.0	468.7	18.1
Zinc	9,218.6	1,918.6	7,299.9	1,340.3	7,878.2
TOTAL TOXIC METALS	70,515.6	18,772.1	51,743.5	12,490.2	58,025.3
Cyanide	62,012.1	1,551.6	60,460.5	1,376.4	60,635.7
TOTAL TOXICS	132,527.7	32,408.8	100,118.9	19,012.1	113,515.6
Aluminum	1,616,658.8	12,953.9	1,603,704.8	8,616.7	1,608,042.1
Fluoride	3,737,362.6	114,805.5	3,622,557.1	113,929.5	3,623,433.1
TOTAL NONCONVENTIONALS	5,354,021.4	127,759.4	5,226,261.9	122,546.2	5,231,475.2
TSS	20,634,418.3	81,368.0	20,553,050.3	17,225.8	20,617,192.5
Oil & Grease	1,080,812.1	59,290.0	1,021,522.1	59,290.0	1,021,522.1
TOTAL CONVENTIONALS	21,715,230.4	140,658.0	21,574,572.4	76,515.8	21,638,714.6
TOTAL POLLUTANTS	27,201,779.5	300,826.2	26,900,953.2	218,074.1	26,983,705.3
FLOW (l/yr)		5,929,000,000		5,929,000,000	

NOTE: TOTAL TOXIC METALS = Antimony + Arsenic + Cadmium + Chromium + Copper + Lead + Nickel + Selenium + Thallium + Zinc
TOTAL TOXICS = Total Toxic Metals + Cyanide
TOTAL NONCONVENTIONALS = Aluminum + Fluoride
TOTAL CONVENTIONALS = TSS + Oil and Grease
TOTAL POLLUTANTS = Total Toxics + Total Nonconventionals + Total Conventionals

OPTION B = Lime Precipitation, Sedimentation, Oil Skimming, In-process Flow Reduction, and Cyanide Precipitation
OPTION C = Option B, plus Multimedia Filtration

Table X-6

BAT WASTEWATER DISCHARGE RATES FOR THE PRIMARY ALUMINUM SUBCATEGORY

Wastewater Stream	BAT Normalized Discharge Rate l/kkg	BAT Normalized Discharge Rate gal/ton	Production Normalizing Parameter
Anode and cathode paste plant wet air pollution control	136	33	Paste produced
Anode contact cooling and briquette quenching	209	50	Anodes and briquettes cast
Anode bake plant wet air pollution control			
1. Closed top ring furnace	4,324	1,037	Anodes baked
2. Open top ring furnace with spray tower only	50	12	Anodes baked
3. Open top ring furnace with spray tower and wet electrostatic precipitator	730	175	Anodes baked
4. Tunnel kiln	1,138	273	Anodes baked
Cathode reprocessing (when dry potline scrubbing is used)	35,028	8,400	Cryolite produced from cathode reprocessing
Cathode reprocessing (when wet potline scrubbing is used)	0	0	Cryolite produced from cathode reprocessing

Table X-6 (Continued)

BAT WASTEWATER DISCHARGE RATES FOR THE PRIMARY ALUMINUM SUBCATEGORY

Wastewater Stream	BAT Normalized Discharge Rate l/kkg	BAT Normalized Discharge Rate gal/ton	Production Normalizing Parameter
Potline wet air pollution control	838	201	Aluminum produced from electrolytic reduction
Potline SO_2 wet air pollution control	1,341	322	Aluminum produced from electrolytic reduction
Potroom wet air pollution control	1,660	398	Aluminum produced from electrolytic reduction
Pot repair - pot soaking	0	0	Aluminum produced from electrolytic reduction
Degassing wet air pollution control	2,609	626	Aluminum product from degassing and fluxing
Direct chill casting cooling	1,329	319	Aluminum product from direct chill casting
Continuous rod casting contact cooling	104	25.0	Aluminum product from rod casting
Stationary casting contact cooling	0	0	Aluminum product from stationary casting
Shot casting contact cooling	0	0	Aluminum product from stationary casting

TABLE X-7

BAT EFFLUENT LIMITATIONS FOR THE PRIMARY ALUMINUM SUBCATEGORY

Anode and Cathode Paste Plant Wet Air Pollution Control

Pollutant or Pollutant Property	Maximum for Any One Day	Maximum for Monthly Average
Metric Units - mg/kg of paste produced English Units - lbs/million lbs of paste produced		
Acenaphthene	0.005	0.002
Benzo(a)anthracene	0.011	0.005
*Benzo(a)pyrene	0.005	0.002
Benzo(ghi)perylene	0.005	0.002
Chrysene	0.011	0.005
Dibenzo(a,h)anthracene	0.005	0.002
Fluoranthene	0.053	0.025
Pyrene	0.036	0.017
*Aluminum	0.831	0.369
*Antimony	0.262	0.117
Arsenic	0.189	0.084
Cadmium	0.027	0.011
Chromium	0.050	0.020
Copper	0.174	0.083
*Fluoride	8.092	3.590
Lead	0.038	0.018
*Nickel	0.075	0.050
Selenium	0.112	0.050
Zinc	0.139	0.057

*Regulated Pollutant

TABLE X-7 (Continued)

BAT EFFLUENT LIMITATIONS FOR THE PRIMARY ALUMINUM SUBCATEGORY

Anode Contact Cooling and Briquette Quenching

Pollutant or Pollutant Property	Maximum for Any One Day	Maximum for Monthly Average
Metric Units - mg/kg of anodes cast English Units - lbs/million lbs of anodes cast		
Acenaphthene	0.007	0.003
Benzo(a)anthracene	0.016	0.007
*Benzo(a)pyrene	0.007	0.003
Benzo(ghi)perylene	0.007	0.003
Chrysene	0.016	0.007
Dibenzo(a,h)anthracene	0.007	0.003
Fluoranthene	0.082	0.038
Pyrene	0.056	0.026
*Aluminum	1.277	0.566
*Antimony	0.403	0.180
Arsenic	0.291	0.130
Cadmium	0.042	0.017
Chromium	0.077	0.031
Copper	0.268	0.127
*Fluoride	12.440	5.518
Lead	0.059	0.027
*Nickel	0.115	0.077
Selenium	0.171	0.077
Zinc	0.213	0.088

*Regulated Pollutant

TABLE X-7 (Continued)

BAT EFFLUENT LIMITATIONS FOR THE PRIMARY ALUMINUM SUBCATEGORY

Anode Bake Plant Wet Air Pollution Control (Closed Top Ring Furnace)

Pollutant or Pollutant Property	Maximum for Any One Day	Maximum for Monthly Average
Metric Units - mg/kg of anodes baked English Units - lbs/million lbs of anodes baked		
Acenaphthene	0.146	0.067
Benzo(a)anthracene	0.335	0.155
*Benzo(a)pyrene	0.146	0.067
Benzo(ghi)perylene	0.146	0.067
Chrysene	0.335	0.155
Dibenzo(a,h)anthracene	0.146	0.067
Fluoranthene	1.690	0.782
Pyrene	1.151	0.533
*Aluminum	26.420	11.720
*Antimony	8.345	3.719
Arsenic	6.010	2.681
Cadmium	0.865	0.346
Chromium	1.600	0.349
Copper	5.535	2.638
*Fluoride	257.300	114.200
Lead	1.211	0.562
*Nickel	2.378	1.600
Selenium	3.546	1.600
Zinc	4.410	1.816

*Regulated Pollutant

TABLE X-7 (Continued)

BAT EFFLUENT LIMITATIONS FOR THE PRIMARY ALUMINUM SUBCATEGORY

Anode Bake Plant Wet Air Pollution Control (Open Top Ring Furnace With Spray Tower Only)

Pollutant or Pollutant Property	Maximum for Any One Day	Maximum for Monthly Average
Metric Units - mg/kg of anodes baked English Units - lbs/million lbs of anodes baked		
Acenaphthene	0.002	0.001
Benzo(a)anthracene	0.004	0.002
*Benzo(a)pyrene	0.002	0.001
Benzo(ghi)perylene	0.002	0.001
Chrysene	0.004	0.002
Dibenzo(a,h)anthracene	0.002	0.001
Fluoranthene	0.020	0.009
Pyrene	0.013	0.006
*Aluminum	0.306	0.136
*Antimony	0.097	0.043
Arsenic	0.070	0.031
Cadmium	0.010	0.004
Chromium	0.019	0.008
Copper	0.064	0.031
*Fluoride	2.975	1.320
Lead	0.014	0.007
*Nickel	0.028	0.019
Selenium	0.041	0.019
Zinc	0.051	0.021

*Regulated Pollutant

TABLE X-7 (Continued)

BAT EFFLUENT LIMITATIONS FOR THE PRIMARY ALUMINUM SUBCATEGORY

Anode Bake Plant Wet Air Pollution Control (Open Top Ring Furnace With Wet Electrostatic Precipitator and Spray Tower)

Pollutant or Pollutant Property	Maximum for Any One Day	Maximum for Monthly Average
Metric Units - mg/kg of anodes baked English Units - lbs/million lbs of anodes baked		
Acenaphthene	0.025	0.011
Benzo(a)anthracene	0.057	0.026
*Benzo(a)pyrene	0.025	0.011
Benzo(ghi)perylene	0.025	0.011
Chrysene	0.057	0.026
Dibenzo(a,h)anthracene	0.025	0.011
Fluoranthene	0.285	0.132
Pyrene	0.194	0.090
*Aluminum	4.460	1.978
*Antimony	1.409	0.628
Arsenic	1.015	0.453
Cadmium	0.146	0.058
Chromium	0.270	0.110
Copper	0.934	0.445
*Fluoride	43.440	19.270
Lead	0.204	0.095
*Nickel	0.402	0.270
Selenium	0.599	0.270
Zinc	0.745	0.307

*Regulated Pollutant

TABLE X-7 (Continued)

BAT EFFLUENT LIMITATIONS FOR THE PRIMARY ALUMINUM SUBCATEGORY

Anode Bake Plant Wet Air Pollution Control (Tunnel Kiln)

Pollutant or Pollutant Property	Maximum for Any One Day	Maximum for Monthly Average
Metric Units - mg/kg of anodes baked English Units - lbs/million lbs of anodes baked		
Acenaphthene	0.038	0.018
Benzo(a)anthracene	0.088	0.041
*Benzo(a)pyrene	0.038	0.018
Benzo(ghi)perylene	0.038	0.018
Chrysene	0.088	0.041
Dibenzo(a,h)anthracene	0.038	0.018
Fluoranthene	0.445	0.206
Pyrene	0.303	0.140
*Aluminum	6.953	3.084
*Antimony	2.196	0.979
Arsenic	1.582	0.706
Cadmium	0.228	0.091
Chromium	0.421	0.171
Copper	1.457	0.694
*Fluoride	67.710	30.040
Lead	0.319	0.148
*Nickel	0.626	0.421
Selenium	0.933	0.421
Zinc	1.161	0.478

*Regulated Pollutant

TABLE X-7 (Continued)

BAT EFFLUENT LIMITATIONS FOR THE PRIMARY ALUMINUM SUBCATEGORY

Cathode Reprocessing (Operated With Dry Potline Scrubbing and Not Commingled With Other Process or Nonprocess Waters)

Pollutant or Pollutant Property	Maximum for Any One Day	Maximum for Monthly Average
Metric Units - mg/kg of cryolyte recovered English Units - lbs/million lbs of cryolite recovered		
Acenaphthene	1.180	0.546
Benzo(a)anthracene	2.715	1.257
*Benzo(a)pyrene	1.181	0.547
Benzo(ghi)perylene	1.180	0.546
Chrysene	2.715	1.257
Dibenzo(a,h)anthracene	1.180	0.546
Fluoranthene	13.450	6.235
Pyrene	9.326	4.317
*Aluminum	273.200	122.600
*Antimony	420.400	189.200
Arsenic	48.690	21.720
Cadmium	7.006	2.802
Chromium	12.960	5.254
Copper	44.840	21.370
*Cyanide	157.600	70.060
*Fluoride	29,430.000	3,310.000
Lead	9.808	4.554
*Nickel	80.570	35.030
Selenium	28.720	12.960
Zinc	35.730	14.710

*Regulated Pollutant

TABLE X-7 (Continued)

BAT EFFLUENT LIMITATIONS FOR THE PRIMARY ALUMINUM SUBCATEGORY

Cathode Reprocessing (Operated With Dry Potline Scrubbing and Commingled With Other Process or Nonprocess Waters)

Pollutant or Pollutant Property	Maximum for Any One Day	Maximum for Monthly Average
Metric Units - mg/kg of cryolite recovered English Units - lbs/million lbs of cryolite recovered		
Acenaphthene	1.180	0.546
Benzo(a)anthracene	2.715	1.257
*Benzo(a)pyrene	1.181	0.547
Benzo(ghi)perylene	1.180	0.546
Chrysene	2.715	1.257
Dibenzo(a,h)anthracene	1.180	0.546
Fluoranthene	13.690	6.339
Pyrene	9.326	4.317
*Aluminum	214.000	94.930
*Antimony	67.610	30.120
Arsenic	48.690	21.720
Cadmium	7.006	2.802
Chromium	12.960	5.254
Copper	44.840	21.370
*Cyanide	157.600	70.060
*Fluoride	2084.000	924.800
Lead	9.808	4.554
*Nickel	19.270	12.960
Selenium	28.720	12.960
Zinc	35.730	14.710

*Regulated Pollutant

TABLE X-7 (Continued)

BAT EFFLUENT LIMITATIONS FOR THE PRIMARY ALUMINUM SUBCATEGORY

Cathode Reprocessing (Operated With Wet Potline Scrubbing)

Pollutant or Pollutant Property	Maximum for Any One Day	Maximum for Monthly Average
Metric Units - mg/kg of cryolite recovered English Units - lbs/million lbs of cryolite recovered		
Acenaphthene	0.000	0.000
Benzo(a)anthracene	0.000	0.000
*Benzo(a)pyrene	0.000	0.000
Benzo(ghi)perylene	0.000	0.000
Chrysene	0.000	0.000
Dibenzo(a,h)anthracene	0.000	0.000
Fluoranthene	0.000	0.000
Pyrene	0.000	0.000
*Aluminum	0.000	0.000
*Antimony	0.000	0.000
Arsenic	0.000	0.000
Cadmium	0.000	0.000
Chromium	0.000	0.000
Copper	0.000	0.000
*Cyanide	0.000	0.000
*Fluoride	0.000	0.000
Lead	0.000	0.000
*Nickel	0.000	0.000
Selenium	0.000	0.000
Zinc	0.000	0.000

*Regulated Pollutant

TABLE X-7 (Continued)

BAT EFFLUENT LIMITATIONS FOR THE PRIMARY ALUMINUM SUBCATEGORY

Potline Wet Air Pollution Control (Operated Without Cathode Reprocessing)

Pollutant or Pollutant Property	Maximum for Any One Day	Maximum for Monthly Average
Metric Units - mg/kg of aluminum produced from electrolytic reduction English Units - lbs/million lbs of aluminum produced from electrolytic reduction		
Acenaphthene	0.028	0.013
Benzo(a)anthracene	0.065	0.030
*Benzo(a)pyrene	0.028	0.013
Benzo(ghi)perylene	0.028	0.013
Chrysene	0.065	0.030
Dibenzo(a,h)anthracene	0.028	0.013
Fluoranthene	0.328	0.152
Pyrene	0.223	0.103
*Aluminum	5.120	2.271
*Antimony	1.617	0.721
Arsenic	1.165	0.520
Cadmium	0.168	0.067
Chromium	0.310	0.126
Copper	0.073	0.511
*Fluoride	49.860	22.120
Lead	0.235	0.109
*Nickel	0.461	0.310
Selenium	0.687	0.310
Zinc	0.855	0.352

*Regulated Pollutant

TABLE X-7 (Continued)

BAT EFFLUENT LIMITATIONS FOR THE PRIMARY ALUMINUM SUBCATEGORY

Potline Wet Air Pollution Control (Operated With Cathode Reprocessing and not Commingled With Other Process or Nonprocess Waters)

Pollutant or Pollutant Property	Maximum for Any One Day	Maximum for Monthly Average
Metric Units - mg/kg of aluminum produced from electrolytic reduction English Units - lbs/million lbs of aluminum produced from electrolytic reduction		
Acenaphthene	0.028	0.013
Benzo(a)anthracene	0.065	0.030
*Benzo(a)pyrene	0.028	0.013
Benzo(ghi)perylene	0.028	0.013
Chrysene	0.065	0.030
Dibenzo(a,h)anthracene	0.028	0.013
Fluoranthene	0.328	0.152
Pyrene	0.223	0.103
*Aluminum	5.120	2.271
*Antimony	10.060	4.525
Arsenic	1.165	0.520
Cadmium	0.168	0.067
Chromium	0.310	0.126
Copper	0.073	0.511
*Cyanide	3.771	1.676
*Fluoride	703.900	318.500
Lead	0.235	0.109
*Nickel	1.928	0.838
Selenium	0.687	0.310
Zinc	0.855	0.352

*Regulated Pollutant

TABLE X-7 (Continued)

BAT EFFLUENT LIMITATIONS FOR THE PRIMARY ALUMINUM SUBCATEGORY

Potline Wet Air Pollution Control (Operated With Cathode Reprocessing and Commingled With Other Process or Nonprocess wastewaters)

Pollutant or Pollutant Property	Maximum for Any One Day	Maximum for Monthly Average
Metric Units - mg/kg of aluminum produced from electrolytic reduction		
English Units - lbs/million lbs of aluminum produced from electrolytic reduction		
Acenaphthene	0.028	0.013
Benzo(a)anthracene	0.065	0.030
*Benzo(a)pyrene	0.028	0.013
Benzo(ghi)perylene	0.028	0.013
Chrysene	0.065	0.030
Dibenzo(a,h)anthracene	0.028	0.013
Fluoranthene	0.328	0.152
Pyrene	0.223	0.103
*Aluminum	5.120	2.271
*Antimony	1.618	0.721
Arsenic	1.165	0.520
Cadmium	0.168	0.067
Chromium	0.310	0.126
Copper	0.073	0.511
*Cyanide	3.771	1.676
*Fluoride	49.860	22.130
Lead	0.235	0.109
*Nickel	0.461	0.310
Selenium	0.687	0.310
Zinc	0.855	0.352

*Regulated Pollutant

TABLE X-7 (Continued)

BAT EFFLUENT LIMITATIONS FOR THE PRIMARY ALUMINUM SUBCATEGORY

Potroom Wet Air Pollution Control

Pollutant or Pollutant Property	Maximum for Any One Day	Maximum for Monthly Average
Metric Units - mg/kg of aluminum produced from electrolytic reduction English Units - lbs/million lbs of aluminum produced from electrolytic reduction		
Acenaphthene	0.056	0.026
Benzo(a)anthracene	0.129	0.060
*Benzo(a)pyrene	0.056	0.026
Benzo(ghi)perylene	0.056	0.026
Chrysene	0.129	0.060
Dibenzo(a,h)anthracene	0.056	0.026
Fluoranthene	0.649	0.300
Pyrene	0.442	0.205
*Aluminum	10.140	4.499
*Antimony	3.204	1.428
Arsenic	2.307	1.029
Cadmium	0.332	0.133
Chromium	0.614	0.249
Copper	2.125	1.013
*Fluoride	98.770	43.820
Lead	0.465	0.216
*Nickel	0.913	0.614
Selenium	1.361	0.614
Zinc	1.693	0.697

*Regulated Pollutant

TABLE X-7 (Continued)

BAT EFFLUENT LIMITATIONS FOR THE PRIMARY ALUMINUM SUBCATEGORY

Potline SO_2 Emissions Wet Air Pollution Control

Pollutant or Pollutant Property	Maximum for Any One Day	Maximum for Monthly Average
Metric Units - mg/kg of aluminum produced from electrolytic reduction English Units - lbs/million lbs of aluminum produced from electrolytic reduction		
Acenaphthene	0.045	0.021
Benzo(a)anthracene	0.104	0.048
*Benzo(a)pyrene	0.045	0.021
Benzo(ghi)perylene	0.045	0.021
Chrysene	0.104	0.048
Dibenzo(a,h)anthracene	0.045	0.021
Fluoranthene	0.524	0.243
Pyrene	0.357	0.165
*Aluminum	8.194	3.634
*Antimony	2.588	1.153
Arsenic	1.864	0.831
Cadmium	0.268	0.107
Chromium	0.496	0.201
Copper	1.716	0.818
*Fluoride	79.790	35.400
Lead	0.375	0.174
*Nickel	0.738	0.496
Selenium	1.100	0.496
Zinc	1.368	0.563

* Regulated Pollutants

TABLE X-7 (Continued)

BAT EFFLUENT LIMITATIONS FOR THE PRIMARY ALUMINUM SUBCATEGORY

Degassing Wet Air Pollution Control

Pollutant or Pollutant Property	Maximum for Any One Day	Maximum for Monthly Average
Metric Units - mg/kg of aluminum produced from electrolytic reduction English Units - lbs/million lbs of aluminum produced from electrolytic reduction		
Acenaphthene	0.088	0.041
Benzo(a)anthracene	0.202	0.094
*Benzo(a)pyrene	0.088	0.041
Benzo(ghi)perylene	0.088	0.041
Chrysene	0.202	0.094
Dibenzo(a,h)anthracene	0.088	0.041
Fluoranthene	1.020	0.472
Pyrene	0.695	0.322
*Aluminum	15.940	7.070
*Antimony	5.035	2.244
Arsenic	3.627	1.618
Cadmium	0.522	0.209
Chromium	0.965	0.391
Copper	3.340	1.591
*Fluoride	155.200	68.880
Lead	0.731	0.339
*Nickel	1.435	0.965
Selenium	2.139	0.965
Zinc	2.661	1.096

*Regulated Pollutant

TABLE X-7 (Continued)

BAT EFFLUENT LIMITATIONS FOR THE PRIMARY ALUMINUM SUBCATEGORY

Pot Repair and Pot Soaking

Pollutant or Pollutant Property	Maximum for Any One Day	Maximum for Monthly Average
Metric Units - mg/kg of aluminum produced from electrolytic reduction English Units - lbs/million lbs of aluminum produced from electrolytic reduction		
Acenaphthene	0.000	0.000
Benzo(a)anthracene	0.000	0.000
*Benzo(a)pyrene	0.000	0.000
Benzo(ghi)perylene	0.000	0.000
Chrysene	0.000	0.000
Dibenzo(a,h)anthracene	0.000	0.000
Fluoranthene	0.000	0.000
Pyrene	0.000	0.000
*Aluminum	0.000	0.000
*Antimony	0.000	0.000
Arsenic	0.000	0.000
Cadmium	0.000	0.000
Chromium	0.000	0.000
Copper	0.000	0.000
*Fluoride	0.000	0.000
Lead	0.000	0.000
*Nickel	0.000	0.000
Selenium	0.000	0.000
Zinc	0.000	0.000

*Regulated Pollutant

TABLE X-7 (Continued)

BAT EFFLUENT LIMITATIONS FOR THE PRIMARY ALUMINUM SUBCATEGORY

Direct Chill Casting Contact Cooling

Pollutant or Pollutant Property	Maximum for Any One Day	Maximum for Monthly Average
Metric Units - mg/kg of aluminum product from direct chill casting English Units - lbs/million lbs of aluminum product from direct chill casting		
Acenaphthene	0.045	0.021
Benzo(a)anthracene	0.103	0.048
*Benzo(a)pyrene	0.045	0.021
Benzo(ghi)perylene	0.045	0.021
Chrysene	0.103	0.048
Dibenzo(a,h)anthracene	0.045	0.021
Fluoranthene	0.520	0.240
Phenanthrene	0.045	0.021
Pyrene	0.354	0.164
*Aluminum	8.120	3.602
*Antimony	2.565	1.143
Arsenic	1.847	0.824
Cadmium	0.266	0.106
Chromium	0.492	0.199
Copper	1.701	0.811
*Fluoride	79.080	35.090
Lead	0.372	0.173
*Nickel	0.731	0.492
Selenium	1.090	0.492
Zinc	1.356	0.558

*Regulated Pollutant

TABLE X-7 (Continued)

BAT EFFLUENT LIMITATIONS FOR THE PRIMARY ALUMINUM SUBCATEGORY

Continuous Rod Casting Contact Cooling

Pollutant or Pollutant Property	Maximum for Any One Day	Maximum for Monthly Average
Metric Units - mg/kg of aluminum product from rod casting English Units - lbs/million lbs of aluminum product from rod casting		
Acenaphthene	0.004	0.002
Benzo(a)anthracene	0.008	0.004
*Benzo(a)pyrene	0.004	0.002
Benzo(ghi)perylene	0.004	0.002
Chrysene	0.008	0.004
Dibenzo(a,h)anthracene	0.004	0.002
Fluoranthene	0.041	0.019
Pyrene	0.028	0.013
*Aluminum	0.635	0.282
*Antimony	0.201	0.089
Arsenic	0.145	0.064
Cadmium	0.021	0.008
Chromium	0.038	0.016
Copper	0.133	0.063
*Fluoride	6.188	2.746
Lead	0.029	0.014
*Nickel	0.057	0.038
Selenium	0.085	0.038
Zinc	0.106	0.044

*Regulated Pollutant

TABLE X-7 (Continued)

BAT EFFLUENT LIMITATIONS FOR THE PRIMARY ALUMINUM SUBCATEGORY

Stationary Casting or Shot Casting Contact Cooling

Pollutant or Pollutant Property	Maximum for Any One Day	Maximum for Monthly Average
Metric Units - mg/kg of aluminum product from starionary casting or shot casting English Units - lbs/million lbs of aluminum product from stationary casting or shot casting		
Acenaphthene	0.000	0.000
Benzo(a)anthracene	0.000	0.000
*Benzo(a)pyrene	0.000	0.000
Benzo(ghi)perylene	0.000	0.000
Chrysene	0.000	0.000
Dibenzo(a,h)anthracene	0.000	0.000
Fluoranthene	0.000	0.000
Pyrene	0.000	0.000
*Aluminum	0.000	0.000
*Antimony	0.000	0.000
Arsenic	0.000	0.000
Cadmium	0.000	0.000
Chromium	0.000	0.000
Copper	0.000	0.000
*Fluoride	0.000	0.000
Lead	0.000	0.000
*Nickel	0.000	0.000
Selenium	0.000	0.000
Zinc	0.000	0.000

*Regulated Pollutant

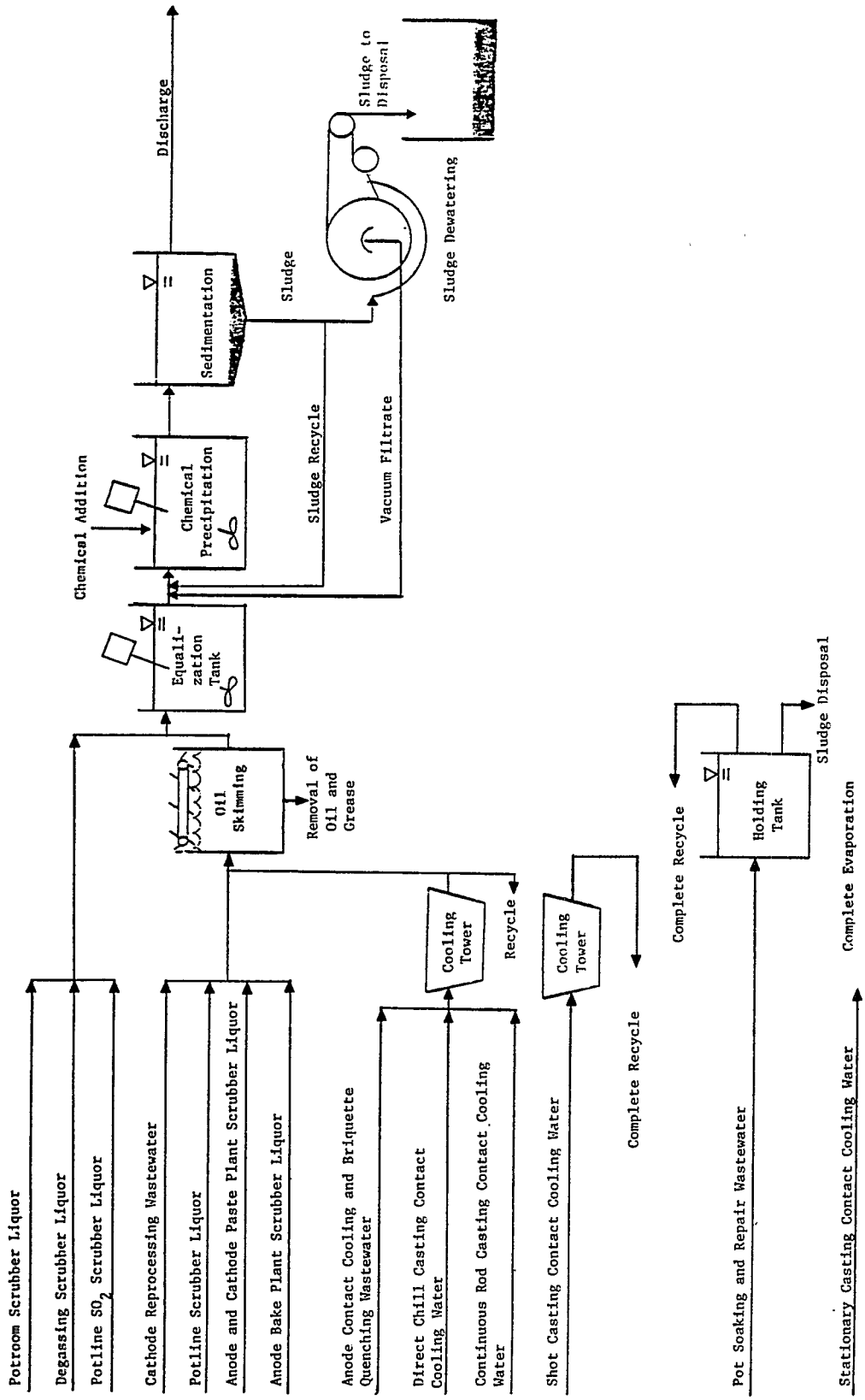

Figure X-1

BAT TREATMENT SCHEME OPTION A
PRIMARY ALUMINUM SUBCATEGORY

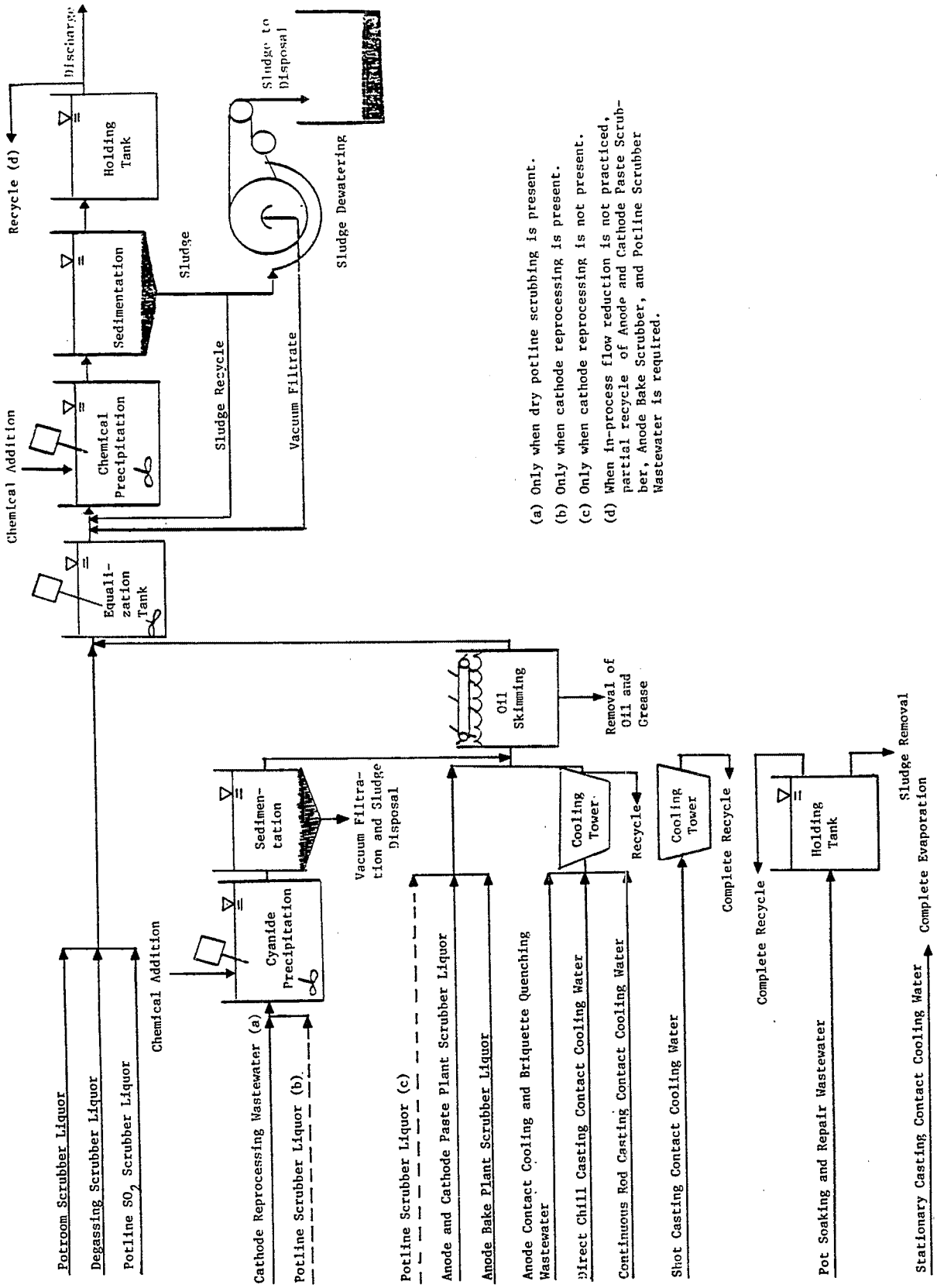

(a) Only when dry potline scrubbing is present.
(b) Only when cathode reprocessing is present.
(c) Only when cathode reprocessing is not present.
(d) When in-process flow reduction is not practiced, partial recycle of Anode and Cathode Paste Scrubber, Anode Bake Scrubber, and Potline Scrubber Wastewater is required.

Figure X-2

BAT TREATMENT SCHEME OPTION B
PRIMARY ALUMINUM SUBCATEGORY

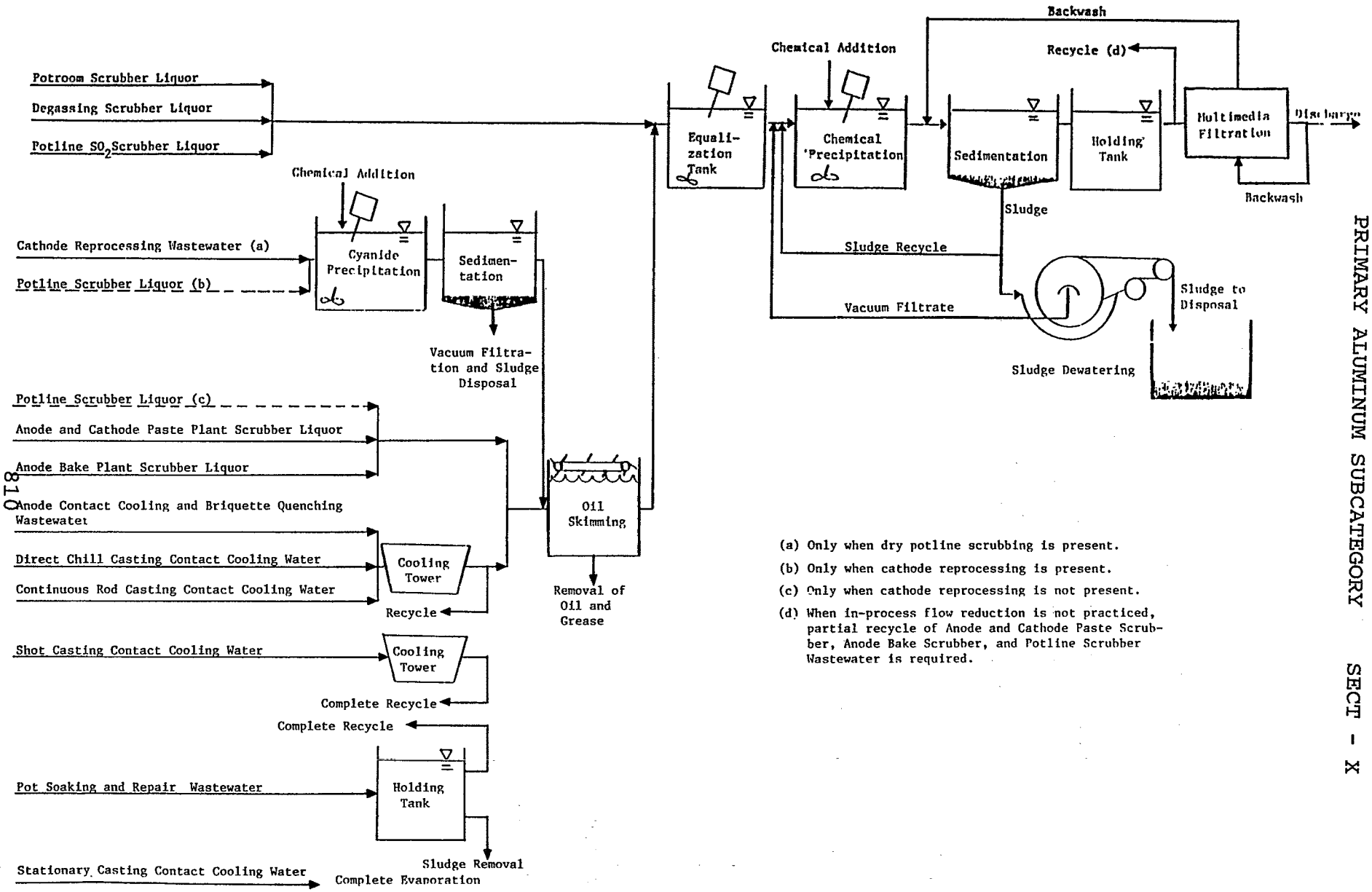

(a) Only when dry potline scrubbing is present.

(b) Only when cathode reprocessing is present.

(c) Only when cathode reprocessing is not present.

(d) When in-process flow reduction is not practiced, partial recycle of Anode and Cathode Paste Scrubber, Anode Bake Scrubber, and Potline Scrubber Wastewater is required.

Figure X-3

BAT TREATMENT SCHEME OPTION C
PRIMARY ALUMINUM SUBCATEGORY

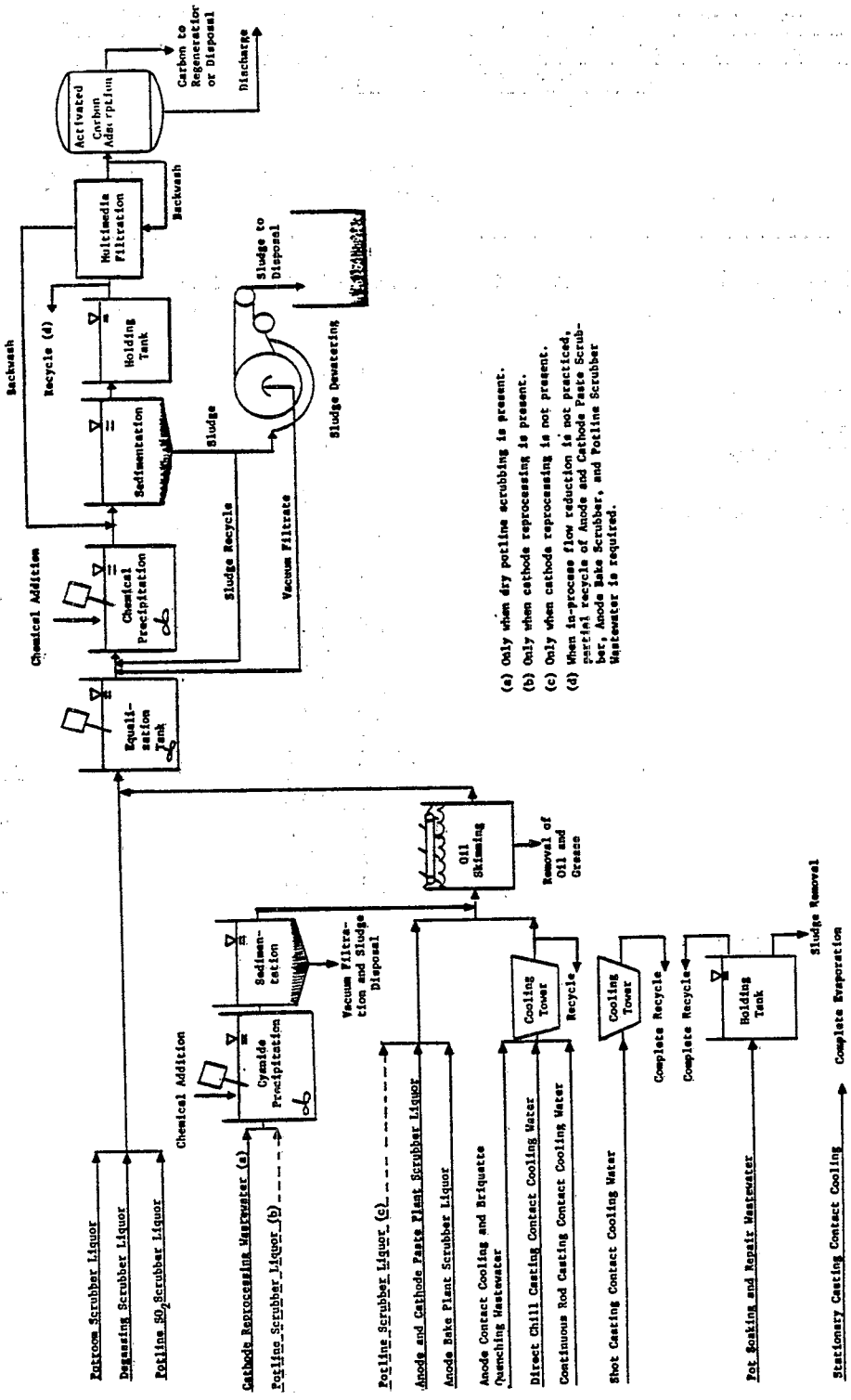

Figure X-4

BAT TREATMENT SCHEME OPTION E
PRIMARY ALUMINUM SUBCATEGORY

THIS PAGE INTENTIONALLY LEFT BLANK

SECTION XI

NEW SOURCE PERFORMANCE STANDARDS

The basis for new source performance standards (NSPS) under Section 306 of the Act is the best available demonstrated technology (BDT). New plants have the opportunity to design the best and most efficient production processes and wastewater treatment technologies, without facing the added costs and restrictions encountered in retrofitting an existing plant. Therefore, Congress directed EPA to consider the best demonstrated process changes, in-plant controls, and end-of-pipe treatment technologies which reduce pollution to the maximum extent feasible.

This section describes the control technology for treatment of wastewater from new sources, and presents mass discharge limitations of regulated pollutants for NSPS based on the described control technology.

TECHNICAL APPROACH TO BDT

All of the treatment technology options applicable to a new source were previously considered for the BAT options. For this reason, four options were considered for BDT that were identical to the BAT options discussed in Section X except for Option B. Option B eliminates three sources of wastewater through the use of dry air pollution control: anode paste plant wet air pollution control, anode bake plant wet air pollution control, and potline wet air pollution control. Degassing wet air pollution is also eliminated based on alternate in-line fluxing and filtering methods. For all other waste streams, BDT Option B is identical to BAT Option B. The treatment technologies used for the four BDT options are:

OPTION A

- Preliminary treatment with oil skimming (where required)
- Chemical precipitation and sedimentation

OPTION B

- Preliminary treatment with oil skimming (where required)
- Preliminary treatment of cathode reprocessing wastewater with ferrous sulfate precipitation
- Chemical precipitation and sedimentation
- In-process flow reduction of casting contact cooling water
- Dry alumina scrubbing of gaseous emissions from anode paste plants, anode bake plants, potlines, and potrooms
- Alternate in-line fluxing and filtering techniques

OPTION C

- Preliminary treatment with oil skimming (where required)
- Preliminary treatment of cathode reprocessing wastewater with ferrous sulfate precipitation
- Chemical precipitation and sedimentation
- In-process flow reduction of casting contact cooling water
- Dry alumina scrubbing of gaseous emissions from anode paste plants, anode bake plants, potlines, and potrooms
- Alternate in-line fluxing and filtering techniques
- Multimedia filtration

OPTION E

- Preliminary treatment with oil skimming (where required)
- Preliminary treatment of cathode reprocessing wastewater with ferrous sulfate precipitation
- Chemical precipitation and sedimentation
- In-process flow reduction of casting contact cooling water
- Dry alumina scrubbing of gaseous emissions from anode paste plants, anode bake plants, potlines, and potrooms
- Alternate in-line fluxing and filtering techniques
- Multimedia filtration
- End-of-pipe treatment with activated carbon adsorption

Partial or complete reuse and recycle of wastewater is an essential part of each option. Reuse and recycle can precede or follow end-of-pipe treatment. A more detailed discussion of these treatment options is presented in Section X.

BDT OPTION SELECTION

EPA proposed that the best available demonstrated technology for the primary aluminum subcategory be based on BAT plus additional flow reduction. Additional flow reduction was based on the use of dry air pollution scrubbing on potlines, anode bake plants, and anode paste plants and elimination of potroom and degassing scrubber discharges. Potroom scrubbing discharges are eliminated by design of efficient potline scrubbing (eliminating potroom scrubbing completely) and the use of center worked prebake cells and side worked Soderberg cells. Zero discharge of potline scrubbing is also demonstrated through the reuse of casting contact cooling water as scrubber liquor makeup. Degassing scrubbers are eliminated through the use of alternate in-line fluxing and filtering methods.

These flow reductions are demonstrated at existing plants, but were not included in BAT because they might involve substantial retrofit costs at other existing plants. However, new plants can include these reductions in plant design at no significant additional cost. Dry scrubbing also prevents the contamination of scrubbing discharges with toxic organics.

Although this technology is demonstrated, information submitted through comments and gathered by specific data requests indicates that two possible problems for new sources could be created by the proposed NSPS, one with respect to continued utilization of certain cell technologies, the other regarding ability to produce certain high purity alloys.

Dry potline scrubbing and elimination of potroom scrubbing for new sources would effectively require center-worked prebake or horizontal stud Soderberg cell technology. This is because the other major cell technologies, the side-worked prebake and vertical Soderberg cell, must use wet scrubbers to control fluoride emissions due to hooding constraints. EPA's NSPS for new "green field" primary aluminum sources are based on these facilities using center-worked prebake and horizontal stud Soderberg cells, or achieving the effluent limitations that are associated with the use of dry scrubbing. This is an environmentally more acceptable process (particularly in terms of net effluent reductions) because fluoride emissions can be fully contained without the use of wet scrubbers while capturing and returning the fluoride to the manufacturing process. See Senate Committee on Public Works, A Legislative History of the Clean Water Act, 93d Cong. 1st Sess., Vol. 1 at 172 (new source performance standards are to reflect "levels of pollution control which are available through the use of improved production processes)."

An issue arises, however, as to whether major expansions of capacity at existing Soderberg plants are to be classified as new sources or as major modifications subject to BAT. Dry scrubbing on vertical Soderberg potline or potroom emissions may not be feasible, as a practical matter. However, use of horizontal stud Soderberg technology with dry potline and not potroom scrubbing is demonstrated. Therefore, construction of new sources or major expansions do not receive a discharge allowance for potline or potroom scrubbing.

It appears dry potline scrubbing may result in product quality constraints due to iron and silicon contamination when recycled alumina from scrubbers is used as potline feed. Industry personnel report high purity alloys can be manufactured if only a small proportion of the plant's capacity is dedicated to the manufacture of these alloys. Thus, it appears new sources producing high purity alloys would be at a competitive disadvantage if they must install dry scrubbing technology because of a requirement to use more virgin alumina per ton of product.

The Agency believes this problem to be hypothetical and unlikely to occur in actuality. Plants with dry scrubbing can avoid contamination of these alloys by segregating production of metal produced from virgin ore from metal produced from alumina recycled from dry scrubbers. Although this may allow only a relatively small (10 to 20) percentage of a plant's production to be dedicated to certain high purity alloys, EPA is unaware of any

plant that devotes large percentages of its production capacity to these specific alloys. Thus, all existing plants that produce these high purity alloys and have dry scrubbers appear to be operating without competitive constraint. Therefore, new sources will not suffer adverse competitive impact as a result of a dry scrubbing requirement. If a prospective new source is able to demonstrate that (1) it will dedicate too much capacity to high purity alloys to utilize all of its recyclable alumina; (2) it is unable to market its excess recyclable alumina; and (3) the costs of purchasing excess virgin ore and reprocessing alumina through the Bayer process are so high as to pose a barrier to entry, the Agency will entertain rulemaking application to amend NSPS. Since no demonstration has been made, and the possibility appears very remote, this proposed NSPS is not altered.

The promulgated NSPS will eliminate discharge of toxic organics and metals associated with potline and potroom scrubber discharge, but will not require any significantly different cost of compliance for new or existing sources. The incompatible alloys with dry scrubbing are listed below:

1.	1080	6.	5252
2.	1085	7.	5657
3.	1180	8.	7029
4.	1188	9.	A356
5.	2124	10.	A357

Alternate in-line fluxing and filtering is demonstrated throughout the subcategory. However, industry representatives claim alternate in-line fluxing and filtering is not capable of manufacturing all alloys, and therefore, a degassing scrubber allowance is necessary so that furnace fluxing can be used for new sources. Each facility known to use alternate in-line methods was contacted to determine if any of these alloys are currently manufactured or capable of being manufactured with alternate in-line fluxing. Table XI-1 (page 818) presents the results of this survey. As shown in the table, manufacture of these alloys with alternate in-line fluxing techniques is possible. Therefore, NSPS is based on alternate in-line fluxing and filtering, which eliminates the need for wet degassing scrubbers.

REGULATED POLLUTANT PARAMETERS

The Agency has no reason to believe that the pollutants that will be found in treatable concentrations in processes within new sources will be any different than with existing sources. Accordingly, pollutants and pollutant parameters selected for limitation under NSPS, in accordance with the rationale of Sections VI and X, are identical to those selected for BAT. The conventional pollutant parameters TSS, oil and grease, and pH are also selected for limitation.

NEW SOURCE PERFORMANCE STANDARDS

The NSPS discharge flows for anode paste plant, anode bake plant, potline air scrubbing, and potroom air scrubbing will be zero as a result of the use of dry air pollution controls. Degassing wet air pollution control is eliminated through alternate in-line fluxing and filtering techniques. The remaining stream discharge flows are the same for all options and are presented in Table XI-2 (page 819). The mass of pollutant allowed to be discharged per mass of product is calculated by multiplying the appropriate effluent concentration (Table VIII-21, Vol-1,page 248) by the production normalized wastewater discharge flows (l/kkg). New source performance standards for the primary aluminum subcategory waste streams are shown in Table XI-3 (page 821).

EPA amended the pH standard for new sources for direct chill casting contact cooling water to a pH range of 6.0 to 10.0 standard units provided this stream is not commingled with other process wastewaters. If direct chill casting contact cooling water is commingled with other process waters, it is still subject to a pH range of 7.0 to 10.0 at all times.

Table XI-1

PLANTS CURRENTLY MANUFACTURING OR CAPABLE OF MANUFACTURING HIGH PURITY ALLOYS USING ALTERNATE IN-LINE FLUXING AND FILTERING

Plant Code	Alloy Type									
	5005	5050	5052	5086	5252	5352	5657	7029	7075	4343
350	X	X	X	X		X		X	X	X
353	X	X	X	X	X	X	X	X	X	X
361	X		X		X		X			
6101	X	X	X		X			X	X	X
357	X	X	X	X	X	X	X	X	X	X

Table XI-2

NSPS WASTEWATER DISCHARGE RATES FOR THE PRIMARY ALUMINUM SUBCATEGORY

Wastewater Stream	NSPS Normalized Discharge Rate l/kkg	NSPS Normalized Discharge Rate gal/ton	Production Normalizing Parameter
Anode paste plant wet air pollution control	0	0	Paste produced
Anode contact cooling and briquette quenching	209	50	Anodes and briquettes cast
Anode bake plant wet air pollution control	0	0	Anodes baked
Cathode reprocessing	35,028	8,400	Cryolite produced from cathode reprocessing
Potline wet air pollution control	0	0	Aluminum produced from electrolytic reduction
Potline SO_2 wet air pollution control	1,341	322	Aluminum produced from electrolytic reduction
Potroom wet air pollution control	0	0	Aluminum produced from electrolytic reduction
Pot repair - pot soaking	0	0	Aluminum produced from electrolytic reduction
Degassing wet air pollution control	0	0	Aluminum product from degassing and fluxing
Direct chill casting cooling	1,329	626	Aluminum product from direct chill casting

Table XI-2 (Continued)

NSPS WASTEWATER DISCHARGE RATES FOR THE PRIMARY ALUMINUM SUBCATEGORY

Wastewater Stream	NSPS Normalized Discharge Rate l/kkg	gal/ton	Production Normalizing Parameter
Continuous rod casting contact cooling	104	25.0	Aluminum product from rod casting
Stationary and shot casting contact cooling	0	0	Aluminum product from stationary casting

TABLE XI-3

NSPS FOR THE PRIMARY ALUMINUM SUBCATEGORY

Anode and Cathode Paste Plant Wet Air Pollution Control

Pollutant or Pollutant Property	Maximum for Any One Day	Maximum for Monthly Average
Metric Units - mg/kg of paste produced English Units - lbs/million lbs of paste produced		
Acenaphthene	0.000	0.000
Benzo(a)anthracene	0.000	0.000
*Benzo(a)pyrene	0.000	0.000
Benzo(ghi)perylene	0.000	0.000
Chrysene	0.000	0.000
Dibenzo(a,h)anthracene	0.000	0.000
Fluoranthene	0.000	0.000
Phenanthrene	0.000	0.000
Pyrene	0.000	0.000
*Aluminum	0.000	0.000
*Antimony	0.000	0.000
Arsenic	0.000	0.000
Cadmium	0.000	0.000
Chromium	0.000	0.000
Copper	0.000	0.000
*Fluoride	0.000	0.000
Lead	0.000	0.000
*Nickel	0.000	0.000
Selenium	0.000	0.000
Zinc	0.000	0.000
*Oil & Grease	0.000	0.000
*TSS	0.000	0.000
*pH	Within the range of 7.0 to 10.0 at all times	

*Regulated Pollutant

TABLE Xl-3 (Continued)

NSPS FOR THE PRIMARY ALUMINUM SUBCATEGORY

Anode Contact Cooling and Briquette Quenching

Pollutant or Pollutant Property	Maximum for Any One Day	Maximum for Monthly Average
Metric Units - mg/kg of anodes cast English Units - lbs/million lbs of anodes cast		
Acenaphthene	0.007	0.003
Benzo(a)anthracene	0.016	0.007
*Benzo(a)pyrene	0.007	0.003
Benzo(ghi)perylene	0.007	0.003
Chrysene	0.016	0.007
Dibenzo(a,h)anthracene	0.007	0.003
Fluoranthene	0.082	0.038
Phenanthrene	0.007	0.003
Pyrene	0.056	0.026
*Aluminum	1.277	0.566
*Antimony	0.403	0.180
Arsenic	0.291	0.130
Cadmium	0.042	0.017
Chromium	0.077	0.031
Copper	0.268	0.127
*Fluoride	12.440	5.518
Lead	0.059	0.027
*Nickel	0.115	0.077
Selenium	0.171	0.077
Zinc	0.213	0.088
*Oil & Grease	2.090	2.090
*TSS	3.135	2.508
*pH	Within the range of 7.0 to 10.0 at all times	

*Regulated Pollutant

TABLE X1-3 (Continued)

NSPS FOR THE PRIMARY ALUMINUM SUBCATEGORY

Anode Bake Plant Wet Air Pollution Control

Pollutant or Pollutant Property	Maximum for Any One Day	Maximum for Monthly Average
Metric Units - mg/kg of anodes baked English Units - lbs/million lbs of anodes baked		
Acenaphthene	0.000	0.000
Benzo(a)anthracene	0.000	0.000
*Benzo(a)pyrene	0.000	0.000
Benzo(ghi)perylene	0.000	0.000
Chrysene	0.000	0.000
Dibenzo(a,h)anthracene	0.000	0.000
Fluoranthene	0.000	0.000
Pyrene	0.000	0.000
*Aluminum	0.000	0.000
*Antimony	0.000	0.000
Arsenic	0.000	0.000
Cadmium	0.000	0.000
Chromium	0.000	0.000
Copper	0.000	0.000
*Fluoride	0.000	0.000
Lead	0.000	0.000
*Nickel	0.000	0.000
Selenium	0.000	0.000
Zinc	0.000	0.000
*Oil & Grease	0.000	0.000
*TSS	0.000	0.000
*pH	Within the range of 7.0 to 10.0 at all times	

*Regulated Pollutant

TABLE X1-3 (Continued)

NSPS FOR THE PRIMARY ALUMINUM SUBCATEGORY

Cathode Reprocessing (Operated With Dry Potline Scrubbing and Not Commingled With Other Process or Nonprocess Waters)

Pollutant or Pollutant Property	Maximum for Any One Day	Maximum for Monthly Average
Metric Units - mg/kg of cryolite recovered English Units - lbs/million lbs of cryolite recovered		
Acenaphthene	1.180	0.546
Benzo(a)anthracene	2.715	1.257
*Benzo(a)pyrene	1.180	0.546
Benzo(ghi)perylene	1.180	0.546
Chrysene	2.715	1.257
Dibenzo(a,h)anthracene	1.180	0.546
Fluoranthene	13.690	6.339
Pyrene	9.326	4.317
*Aluminum	273.200	122.600
*Antimony	420.400	189.200
Arsenic	48.690	21.720
Cadmium	7.006	2.802
Chromium	12.960	5.254
Copper	44.840	21.370
*Cyanide	157.600	70.060
*Fluoride	29,430.000	3,310.000
Lead	9.808	4.554
*Nickel	80.570	35.030
Selenium	28.720	12.960
Zinc	35.730	14.710
*Oil & Grease	350.300	350.300
*TSS	2172.000	945.800
*pH	Within the range of 7.0 to 10.0 at all times	

*Regulated Pollutant

TABLE XI-3 (Continued)

NSPS FOR THE PRIMARY ALUMINUM SUBCATEGORY

Cathode Reprocessing (Operated With Dry Potline Scrubbing and Commingled With Other Process or Nonprocess Waters)

Pollutant or Pollutant Property	Maximum for Any One Day	Maximum for Monthly Average
Metric Units - mg/kg of cryolite recovered English Units - lbs/million lbs of cryolite recovered		
Acenaphthene	1.180	0.546
Benzo(a)anthracene	2.715	1.257
*Benzo(a)pyrene	1.181	0.547
Benzo(ghi)perylene	1.180	0.546
Chrysene	2.715	1.257
Dibenzo(a,h)anthracene	1.180	0.546
Fluoranthene	13.690	6.339
Pyrene	9.326	4.317
*Aluminum	214.000	94.930
*Antimony	67.600	30.120
Arsenic	48.690	21.720
Cadmium	7.006	2.802
Chromium	12.960	5.254
Copper	44.840	21.370
*Cyanide	157.600	70.060
*Fluoride	2084.000	924.800
Lead	9.808	4.554
*Nickel	19.270	12.960
Selenium	28.720	12.960
Zinc	35.730	14.710
*Oil & Grease	350.300	350.300
*TSS	2172.000	945.800
*pH	Within the range of 7.0 to 10.0 at all times	

*Regulated Pollutant

TABLE X1-3 (Continued)

NSPS FOR THE PRIMARY ALUMINUM SUBCATEGORY

Potline Wet Air Pollution Control

Pollutant or Pollutant Property	Maximum for Any One Day	Maximum for Monthly Average
Metric Units - mg/kg of aluminum produced from electrolytic reduction English Units - lbs/million lbs of aluminum produced from electrolytic reduction		
Acenaphthene	0.000	0.000
Benzo(a)anthracene	0.000	0.000
*Benzo(a)pyrene	0.000	0.000
Benzo(ghi)perylene	0.000	0.000
Chrysene	0.000	0.000
Dibenzo(a,h)anthracene	0.000	0.000
Fluoranthene	0.000	0.000
Pyrene	0.000	0.000
*Aluminum	0.000	0.000
*Antimony	0.000	0.000
Arsenic	0.000	0.000
Cadmium	0.000	0.000
Chromium	0.000	0.000
Copper	0.000	0.000
*Fluoride	0.000	0.000
Lead	0.000	0.000
*Nickel	0.000	0.000
Selenium	0.000	0.000
Zinc	0.000	0.000
*Oil & Grease	0.000	0.000
*TSS	0.000	0.000
*pH	Within the range of 7.0 to 10.0 at all times	

*Regulated Pollutant

TABLE Xl-3 (Continued)

NSPS FOR THE PRIMARY ALUMINUM SUBCATEGORY

Potroom Wet Air Pollution Control

Pollutant or Pollutant Property	Maximum for Any One Day	Maximum for Monthly Average
Metric Units - mg/kg of aluminum produced from electrolytic reduction English Units - lbs/million lbs of aluminum produced from electrolytic reduction		
Acenaphthene	0.000	0.000
Benzo(a)anthracene	0.000	0.000
*Benzo(a)pyrene	0.000	0.000
Benzo(ghi)perylene	0.000	0.000
Chrysene	0.000	0.000
Dibenzo(a,h)anthracene	0.000	0.000
Fluoranthene	0.000	0.000
Pyrene	0.000	0.000
*Aluminum	0.000	0.000
*Antimony	0.000	0.000
Arsenic	0.000	0.000
Cadmium	0.000	0.000
Chromium	0.000	0.000
Copper	0.000	0.000
*Fluoride	0.000	0.000
Lead	0.000	0.000
*Nickel	0.000	0.000
Selenium	0.000	0.000
Zinc	0.000	0.000
*Oil & Grease	0.000	0.000
*TSS	0.000	0.000
*pH	Within the range of 7.0 to 10.0 at all times	

*Regulated Pollutant

TABLE XI-3 (Continued)

NSPS FOR THE PRIMARY ALUMINUM SUBCATEGORY

Potline SO_2 Emissions Wet Air Pollution Control

Pollutant or Pollutant Property	Maximum for Any One Day	Maximum for Monthly Average
Metric Units - mg/kg of aluminum produced from electrolytic reduction English Units - lbs/million lbs of aluminum produced from electrolytic reduction		
Acenaphthene	0.045	0.021
Benzo(a)anthracene	0.104	0.048
*Benzo(a)pyrene	0.045	0.021
Benzo(ghi)perylene	0.045	0.021
Chrysene	0.104	0.048
Dibenzo(a,h)anthracene	0.045	0.021
Fluoranthene	0.524	0.243
Pyrene	0.357	0.165
*Aluminum	8.194	3.634
*Antimony	2.588	1.153
Arsenic	1.864	0.831
Cadmium	0.258	0.107
Chromium	0.496	0.201
Copper	1.716	0.818
*Fluoride	79.790	35.400
Lead	0.375	0.174
*Nickel	0.738	0.496
Selenium	1.100	0.496
Zinc	1.368	0.563
*Oil & Grease	13.410	13.410
*TSS	20.120	16.090
*pH	Within the range of 7.0 to 10.0 at all times	

*Regulated Pollutant

TABLE X1-3 (Continued)

NSPS FOR THE PRIMARY ALUMINUM SUBCATEGORY

Degassing Wet Air Pollution Control

Pollutant or Pollutant Property	Maximum for Any One Day	Maximum for Monthly Average
Metric Units - mg/kg of aluminum produced from electrolytic reduction English Units - lbs/million lbs of aluminum produced from electrolytic reduction		
Acenaphthene	0.000	0.000
Benzo(a)anthracene	0.000	0.000
*Benzo(a)pyrene	0.000	0.000
Benzo(ghi)perylene	0.000	0.000
Chrysene	0.000	0.000
Dibenzo(a,h)anthracene	0.000	0.000
Fluoranthene	0.000	0.000
Pyrene	0.000	0.000
*Aluminum	0.000	0.000
*Antimony	0.000	0.000
Arsenic	0.000	0.000
Cadmium	0.000	0.000
Chromium	0.000	0.000
Copper	0.000	0.000
*Fluoride	0.000	0.000
Lead	0.000	0.000
*Nickel	0.000	0.000
Selenium	0.000	0.000
Zinc	0.000	0.000
*Oil & Grease	0.000	0.000
*TSS	0.000	0.000
*pH	Within the range of 7.0 to 10.0 at all times	

*Regulated Pollutant

TABLE X1-3 (Continued)

NSPS FOR THE PRIMARY ALUMINUM SUBCATEGORY

Pot Repair and Pot Soaking

Pollutant or Pollutant Property	Maximum for Any One Day	Maximum for Monthly Average
Metric Units - mg/kg of aluminum produced from electrolytic refining English Units - lbs/million lbs of aluminum produced from electrolytic reduction		
Acenaphthene	0.000	0.000
Benzo(a)anthracene	0.000	0.000
*Benzo(a)pyrene	0.000	0.000
Benzo(ghi)perylene	0.000	0.000
Chrysene	0.000	0.000
Dibenzo(a,h)anthracene	0.000	0.000
Fluoranthene	0.000	0.000
Pyrene	0.000	0.000
*Aluminum	0.000	0.000
*Antimony	0.000	0.000
Arsenic	0.000	0.000
Cadmium	0.000	0.000
Chromium	0.000	0.000
Copper	0.000	0.000
*Fluoride	0.000	0.000
Lead	0.000	0.000
*Nickel	0.000	0.000
Selenium	0.000	0.000
Zinc	0.000	0.000
*Oil & Grease	0.000	0.000
*TSS	0.000	0.000
*pH	Within the range of 7.0 to 10.0 at all times	

*Regulated Pollutant

TABLE X1-3 (Continued)

NSPS FOR THE PRIMARY ALUMINUM SUBCATEGORY

Direct Chill Casting Contact Cooling

Pollutant or Pollutant Property	Maximum for Any One Day	Maximum for Monthly Average
Metric Units - mg/kg of aluminum product from direct chill casting English Units - lbs/million lbs of aluminum product from direct chill casting		
Acenaphthene	0.045	0.021
Benzo(a)anthracene	0.103	0.048
*Benzo(a)pyrene	0.045	0.021
Benzo(ghi)perylene	0.045	0.021
Chrysene	0.103	0.048
Dibenzo(a,h)anthracene	0.045	0.021
Fluoranthene	0.520	0.240
Pyrene	0.354	0.164
*Aluminum	8.120	3.602
*Antimony	2.565	1.143
Arsenic	1.847	0.824
Cadmium	0.266	0.106
Chromium	0.492	0.199
Copper	1.701	0.811
*Fluoride	79.080	35.090
Lead	0.372	0.173
*Nickel	0.731	0.492
Selenium	1.090	0.492
Zinc	1.356	0.558
*Oil & Grease	13.290	13.290
*TSS	19.940	15.950
*pH	Within the range of 7.0 to 10.0 at all times	

*Regulated Pollutant

TABLE X1-3 (Continued)

NSPS FOR THE PRIMARY ALUMINUM SUBCATEGORY

Continuous Rod Casting Contact Cooling

Pollutant or Pollutant Property	Maximum for Any One Day	Maximum for Monthly Average
Metric Units - mg/kg of aluminum product from rod casting English Units - lbs/million lbs of aluminum product from rod casting		
Acenaphthene	0.004	0.002
Benzo(a)anthracene	0.008	0.004
*Benzo(a)pyrene	0.004	0.002
Benzo(ghi)perylene	0.004	0.002
Chrysene	0.008	0.004
Dibenzo(a,h)anthracene	0.004	0.002
Fluoranthene	0.041	0.019
Pyrene	0.028	0.013
*Aluminum	0.635	0.282
*Antimony	0.201	0.089
Arsenic	0.145	0.064
Cadmium	0.021	0.008
Chromium	0.038	0.016
Copper	0.133	0.063
*Fluoride	6.188	2.746
Lead	0.029	0.014
*Nickel	0.057	0.038
Selenium	0.085	0.038
Zinc	0.106	0.044
*Oil & Grease	1.040	1.040
*TSS	1.560	1.248
*pH	Within the range of 7.0 to 10.0 at all times	

*Regulated Pollutant

TABLE X1-3 (Continued)

NSPS FOR THE PRIMARY ALUMINUM SUBCATEGORY

Stationary Casting or Shot Casting Contact Cooling

Pollutant or Pollutant Property	Maximum for Any One Day	Maximum for Monthly Average
Metric Units - mg/kg of aluminum product from stationary casting or shot casting English Units - lbs/million lbs of aluminum product from stationary casting or shot casting		
Acenaphthene	0.000	0.000
Benzo(a)anthracene	0.000	0.000
*Benzo(a)pyrene	0.000	0.000
Benzo(ghi)perylene	0.000	0.000
Chrysene	0.000	0.000
Dibenzo(a,h)anthracene	0.000	0.000
Fluoranthene	0.000	0.000
Pyrene	0.000	0.000
*Aluminum	0.000	0.000
*Antimony	0.000	0.000
Arsenic	0.000	0.000
Cadmium	0.000	0.000
Chromium	0.000	0.000
Copper	0.000	0.000
*Fluoride	0.000	0.000
Lead	0.000	0.000
*Nickel	0.000	0.000
Selenium	0.000	0.000
Zinc	0.000	0.000
*Oil & Grease	0.000	0.000
*TSS	0.000	0.000
*pH	Within the range of 7.0 to 10.0 at all times	

*Regulated Pollutant

THIS PAGE INTENTIONALLY LEFT BLANK

SECTION XII

PRETREATMENT STANDARDS

Section 307(b) of the Act requires EPA to promulgate pretreatment standards for existing sources (PSES), which must be achieved within three years of promulgation. PSES are designed to prevent the discharge of pollutants which pass through, interfere with, or are otherwise incompatible with the operation of publicly owned treatment works (POTW). The Clean Water Act of 1977 requires pretreatment for pollutants, such as heavy metals, that limit POTW sludge management alternatives. Section 307(c) of the Act requires EPA to promulgate pretreatment standards for new sources (PSNS) at the same time that it promulgates NSPS. New indirect discharge facilities, like new direct discharge facilities, have the opportunity to incorporate the best available demonstrated technologies, including process changes, in-plant controls, and end-of-pipe treatment technologies, and to use plant site selection to ensure adequate treatment system installation. Pretreatment standards are to be technology-based, analogous to the best available technology for removal of toxic pollutants.

This section describes the control and treatment technologies for pretreatment of process wastewaters from new sources in the primary aluminum subcategory. Mass discharge limitations of regulated pollutants are presented based on the described control technology.

TECHNICAL APPROACH TO PRETREATMENT

Before proposing and promulgating pretreatment standards, the Agency examines whether the pollutants discharged by the industry pass through the POTW or interfere with the POTW operation or its chosen sludge disposal practices. In determining whether pollutants pass through a well-operated POTW, achieving secondary treatment, the Agency compares the percentage of a pollutant removed by POTW with the percentage removed by direct discharger applying the best available technology economically achievable. A pollutant is deemed to pass through the POTW when the average percentage removed nationwide by well-operated POTW, meeting secondary treatment requirements, is less than the percentage removed by direct dischargers complying with BAT effluent limitations guidelines for that pollutant. (See generally, 46 FR at 9415-16 (January 28, 1981).)

This definition of pass through satisfies two competing objectives set by Congress: (1) that standards for indirect dischargers be equivalent to standards for direct dischargers, while at the same time, (2) that the treatment capability and performance of the POTW be recognized and taken into account in

regulating the discharge of pollutants from indirect dischargers. The Agency compares percentage removal rather than the mass or concentration of pollutants discharged because the latter would not take into account the mass of pollutants discharged to the POTW from non-industrial sources nor the dilution of the pollutants in the POTW effluent to lower concentrations due to the addition of large amounts of non-industrial wastewater.

PRETREATMENT STANDARDS FOR EXISTING SOURCES

There are no indirect discharging primary aluminum plants in the United States. Consequently, the Agency has elected to not promulgate pretreatment standards for existing sources.

PRETREATMENT STANDARDS FOR NEW SOURCES

Options for pretreatment of wastewaters are based on increasing the effectiveness of end-of-pipe treatment technologies. All in-plant changes and applicable end-of-pipe treatment processes have been discussed previously in Sections X and XI. The options for PSNS, therefore, are the same as the NSPS options discussed in Section XI. Although oil and grease is a conventional pollutant compatible with treatment provided by POTW, oil skimming is needed for the PSNS treatment technology to ensure proper removal. Oil and grease interferes with the chemical addition and mixing required for chemical precipitation treatment

A description of each option is presented in Section X, while a more detailed discussion, including pollutants controlled by each treatment process and achievable treatment concentrations is presented in Section VII of Vol-1.

Treatment technology options for the PSNS are:

OPTION A

- Preliminary treatment with oil skimming (where required)
- Chemical precipitation and sedimentation

OPTION B

- Preliminary treatment with oil skimming (where required)
- Preliminary treatment of cathode reprocessing wastewater with ferrous sulfate precipitation
- Chemical precipitation and sedimentation
- In-process flow reduction of casting contact cooling water

- Dry alumina scrubbing of gaseous emissions from anode paste plants, anode bake plants, potlines, and potrooms
- Alternate in-line fluxing and filtering

OPTION C

- Preliminary treatment with oil skimming (where required)
- Preliminary treatment of cathode reprocessing wastewater with ferrous sulfate precipitation
- Chemical precipitation and sedimentation
- In-process flow reduction of casting contact cooling water
- Dry alumina scrubbing of gaseous emissions from anode paste plants, anode bake plants, potlines, and potrooms
- Alternate in-line fluxing and filtering
- Multimedia filtration

OPTION E

- Preliminary treatment with oil skimming (where required)
- Preliminary treatment of cathode reprocessing wastewater with ferrous sulfate precipitation
- Chemical precipitation and sedimentation
- In-process flow reduction of casting contact cooling water
- Dry alumina scrubbing of gaseous emissions from anode paste plants, anode bake plants, potlines, and potrooms
- Alternate in-line fluxing and filtering
- Multimedia filtration
- End-of-pipe treatment with activated carbon adsorption

PSNS OPTION SELECTION

The technology basis for promulgated PSNS is identical to NSPS (Option C). The treatment scheme consists of preliminary treatment with ferrous sulfate precipitation and oil skimming (where required), followed by lime precipitation, sedimentation, in-process flow reduction, dry alumina scrubbing, and filtration. EPA knows of no demonstrated technology that provides more efficient pollutant removal than NSPS and BAT technology.

New plants have the opportunity to design and use the best and most efficient nonferrous metals manufacturing processes and wastewater treatment technologies without facing the added costs and restrictions encountered in retrofitting an existing plant. The additional flow reduction proposed for new sources can be achieved by the use of dry air pollution scrubbing. The Agency believes that the installation of dry scrubbing instead of wet scrubbing in new facilities reduces the cost of end-of-pipe treatment by reducing the overall volume of wastewater discharged.

REGULATED POLLUTANT PARAMETERS

Pollutants and pollutant parameters selected for limitation in accordance with the rationale of Sections VI and X, are identical to those selected for limitation for BAT with one exception. EPA is promulgating PSNS for benzo(a)pyrene, cyanide, nickel, and

fluoride to prevent pass-through. Limitations for antimony have not been established because it was shown that a well-operated POTW removes 60 percent and the Agency estimates the model BAT treatment technology will remove 55 percent. The conventional pollutants are not limited under PSNS because they are effectively controlled by POTW. Aluminum is not regulated because POTW often use it as an aid to enhance settling.

PRETREATMENT STANDARDS

The PSNS discharge flows are identical to the NSPS discharge flows for all processes. These discharge flows are listed in Table XII-1 (page 839). The mass of pollutant allowed to be discharged per mass of product is calculated by multiplying the achievable treatment concentration (mg/l) (Table VII-21, Vol-1, page 248) by the normalized wastewater discharge flow (l/kkg). Pretreatment standards for new sources, as determined from the above procedure, are shown in Table XII-2 (page 841) for each waste stream.

Mass-based standards are promulgated for the primary aluminum subcategory to ensure that the standards are achieved by means of pollutant removal rather than by dilution. They are particularly important since the standards are based upon flow reduction; pollutant limitations associated with flow reduction cannot be measured by any other way but as a reduction of mass discharged.

Table XII-1

PSNS WASTEWATER DISCHARGE RATES FOR THE PRIMARY ALUMINUM SUBCATEGORY

Wastewater Stream	PSNS Normalized Discharge Rate l/kkg	PSNS Normalized Discharge Rate gal/ton	Production Normalizing Parameter
Anode paste plant wet air pollution control	0	0	Paste produced
Anode contact cooling and briquette quenching	209	50	Anodes and briquettes cast
Anode bake plant wet air pollution control	0	0	Anodes baked
Cathode reprocessing	35,028	8,400	Cryolite produced from cathode reprocessing
Potline wet air pollution control	0	0	Aluminum produced from electrolytic reduction
Potline SO_2 wet air pollution control	1,341	322	Aluminum produced from electrolytic reduction
Potroom wet air pollution control	0	0	Aluminum produced from electrolytic reduction
Pot repair - pot soaking	0	0	Aluminum produced from electrolytic reduction
Degassing wet air pollution control	0	0	Aluminum product from degassing and fluxing
Direct chill casting cooling	1,329	626	Aluminum product from direct chill casting

Table XII-1 (Continued)

PSNS WASTEWATER DISCHARGE RATES FOR THE PRIMARY ALUMINUM SUBCATEGORY

Wastewater Stream	PSNS Normalized Discharge Rate l/kkg	gal/ton	Production Normalizing Parameter
Continuous rod casting contact cooling	104	25.0	Aluminum product from rod casting
Stationary and shot casting contact cooling	0	0	Aluminum product from stationary casting

TABLE XII-2

PSNS FOR THE PRIMARY ALUMINUM SUBCATEGORY

Anode and Cathode Paste Plant Wet Air Pollution Control

Pollutant or Pollutant Property	Maximum for Any One Day	Maximum for Monthly Average
Metric Units - mg/kg of paste produced English Units - lbs/million lbs of paste produced		
Acenaphthene	0.000	0.000
Benzo(a)anthracene	0.000	0.000
*Benzo(a)pyrene	0.000	0.000
Benzo(ghi)perylene	0.000	0.000
Chrysene	0.000	0.000
Dibenzo(a,h)anthracene	0.000	0.000
Fluoranthene	0.000	0.000
Pyrene	0.000	0.000
Antimony	0.000	0.000
Arsenic	0.000	0.000
Cadmium	0.000	0.000
Chromium	0.000	0.000
Copper	0.000	0.000
*Fluoride	0.000	0.000
Lead	0.000	0.000
*Nickel	0.000	0.000
Selenium	0.000	0.000
Zinc	0.000	0.000

*Regulated Pollutant

TABLE XII-2 (Continued)

PSNS FOR THE PRIMARY ALUMINUM SUBCATEGORY

Anode Contact Cooling and Briquette Quenching

Pollutant or Pollutant Property	Maximum for Any One Day	Maximum for Monthly Average
Metric Units - mg/kg of anodes cast English Units - lbs/million lbs of anodes cast		
Acenaphthene	0.007	0.003
Benzo(a)anthracene	0.016	0.007
*Benzo(a)pyrene	0.007	0.003
Benzo(ghi)perylene	0.007	0.003
Chrysene	0.016	0.007
Dibenzo(a,h)anthracene	0.007	0.003
Fluoranthene	0.082	0.038
Pyrene	0.056	0.026
Antimony	0.403	0.180
Arsenic	0.291	0.130
Cadmium	0.042	0.017
Chromium	0.077	0.031
Copper	0.268	0.127
*Fluoride	12.440	5.518
Lead	0.059	0.027
*Nickel	0.115	0.077
Selenium	0.171	0.077
Zinc	0.213	0.088

*Regulated Pollutant

TABLE XII-2 (Continued)

PSNS FOR THE PRIMARY ALUMINUM SUBCATEGORY

Anode Bake Plant Wet Air Pollution Control

Pollutant or Pollutant Property	Maximum for Any One Day	Maximum for Monthly Average
Metric Units - mg/kg of anodes baked English Units - lbs/million lbs of anodes baked		
Acenaphthene	0.000	0.000
Benzo(a)anthracene	0.000	0.000
*Benzo(a)pyrene	0.000	0.000
Benzo(ghi)perylene	0.000	0.000
Chrysene	0.000	0.000
Dibenzo(a,h)anthracene	0.000	0.000
Fluoranthene	0.000	0.000
Pyrene	0.000	0.000
Antimony	0.000	0.000
Arsenic	0.000	0.000
Cadmium	0.000	0.000
Chromium	0.000	0.000
Copper	0.000	0.000
*Fluoride	0.000	0.000
Lead	0.000	0.000
*Nickel	0.000	0.000
Selenium	0.000	0.000
Zinc	0.000	0.000

*Regulated Pollutant

TABLE XII-2 (Continued)

PSNS FOR THE PRIMARY ALUMINUM SUBCATEGORY

Cathode Reprocessing (Operated With Dry Potline Scrubbing and Not Commingled With Other Process or Nonprocess Waters)

Pollutant or Pollutant Property	Maximum for Any One Day	Maximum for Monthly Average
Metric Units - mg/kg of cryolite recovered English Units - lbs/million lbs of cryolite recovered		
Acenaphthene	1.180	0.546
Benzo(a)anthracene	2.715	1.257
*Benzo(a)pyrene	1.181	0.547
Benzo(ghi)perylene	1.180	0.546
Chrysene	2.715	1.257
Dibenzo(a,h)anthracene	1.180	0.546
Fluoranthene	13.690	6.339
Pyrene	9.326	4.317
Antimony	67.600	30.120
Arsenic	48.690	21.720
Cadmium	7.006	2.802
Chromium	12.960	5.254
Copper	44.840	21.370
*Cyanide	157.600	70.060
*Fluoride	2084.000	924.700
Lead	9.808	4.554
*Nickel	19.270	12.960
Selenium	28.720	12.960
Zinc	35.730	14.710

*Regulated Pollutant

TABLE XII-2 (Continued)

PSNS FOR THE PRIMARY ALUMINUM SUBCATEGORY

Cathode Reprocessing (Operated With Dry Potline Scrubbing and Commingled With Other Process or Nonprocess Waters)

Pollutant or Pollutant Property	Maximum for Any One Day	Maximum for Monthly Average
Metric Units - mg/kg of cryolite recovered English Units - lbs/million lbs of cryolite recovered		
Acenaphthene	1.180	0.546
Benzo(a)anthracene	2.715	1.257
*Benzo(a)pyrene	1.181	0.547
Benzo(ghi)perylene	1.180	0.546
Chrysene	2.715	1.257
Dibenzo(a,h)anthracene	1.180	0.546
Fluoranthene	13.690	6.339
Pyrene	9.326	4.317
Antimony	67.600	30.120
Arsenic	48.690	21.720
Cadmium	7.006	2.802
Chromium	12.960	5.254
Copper	44.840	21.370
*Cyanide	157.600	70.060
*Fluoride	29,430.000	3,310.000
Lead	9.808	4.554
*Nickel	80.570	35.030
Selenium	28.720	12.960
Zinc	35.730	14.710

*Regulated Pollutant

Table XII-2 (Continued)

PSNS FOR THE PRIMARY ALUMINUM SUBCATEGORY

Potline Wet Air Pollution Control

Pollutant or Pollutant Property	Maximum for Any One Day	Maximum for Monthly Average
Metric Units - mg/kg of aluminum produced from electrolytic reduction English Units - lbs/million lbs of aluminum produced from electrolytic reduction		
Acenaphthene	0.000	0.000
Benzo(a)anthracene	0.000	0.000
*Benzo(a)pyrene	0.000	0.000
Benzo(ghi)perylene	0.000	0.000
Chrysene	0.000	0.000
Dibenzo(a,h)anthracene	0.000	0.000
Fluoranthene	0.000	0.000
Pyrene	0.000	0.000
Antimony	0.000	0.000
Arsenic	0.000	0.000
Cadmium	0.000	0.000
Chromium	0.000	0.000
Copper	0.000	0.000
*Fluoride	0.000	0.000
Lead	0.000	0.000
*Nickel	0.000	0.000
Selenium	0.000	0.000
Zinc	0.000	0.000

*Regulated Pollutant

TABLE XII-2 (Continued)

PSNS FOR THE PRIMARY ALUMINUM SUBCATEGORY

Potroom Wet Air Pollution Control

Pollutant or Pollutant Property	Maximum for Any One Day	Maximum for Monthly Average
Metric Units - mg/kg of aluminum produced from electrolytic reduction English Units - lbs/million lbs of aluminum produced from electrolytic reduction		
Acenaphthene	0.045	0.021
Benzo(a)anthracene	0.104	0.048
*Benzo(a)pyrene	0.045	0.021
Benzo(ghi)perylene	0.045	0.021
Chrysene	0.104	0.048
Dibenzo(a,h)anthracene	0.045	0.021
Fluoranthene	0.524	0.243
Pyrene	0.357	0.165
Antimony	2.588	1.153
Arsenic	1.864	0.831
Cadmium	0.268	0.107
Chromium	0.496	0.201
Copper	1.716	0.818
*Fluoride	79.790	35.400
Lead	0.375	0.174
*Nickel	0.738	0.496
Selenium	1.100	0.496
Zinc	1.368	0.563

*Regulated Pollutant

TABLE XII-2 (Continued)

PSNS FOR THE PRIMARY ALUMINUM SUBCATEGORY

Potline SO_2 Emissions Wet Air Pollution Control

Pollutant or Pollutant Property	Maximum for Any One Day	Maximum for Monthly Average
Metric Units - mg/kg of aluminum produced from electrolytic reduction English Units - lbs/million lbs of aluminum produced from electrolytic reduction		
Acenaphthene	0.000	0.000
Benzo(a)anthracene	0.000	0.000
*Benzo(a)pyrene	0.000	0.000
Benzo(ghi)perylene	0.000	0.000
Chrysene	0.000	0.000
Dibenzo(a,h)anthracene	0.000	0.000
Fluoranthene	0.000	0.000
Pyrene	0.000	0.000
Antimony	0.000	0.000
Arsenic	0.000	0.000
Cadmium	0.000	0.000
Chromium	0.000	0.000
Copper	0.000	0.000
*Fluoride	0.000	0.000
Lead	0.000	0.000
*Nickel	0.000	0.000
Selenium	0.000	0.000
Zinc	0.000	0.000

*Regulated Pollutant

Table XlI-2 (Continued)

PSNS FOR THE PRIMARY ALUMINUM SUBCATEGORY

Degassing Wet Air Pollution Control

Pollutant or Pollutant Property	Maximum for Any One Day	Maximum for Monthly Average
Metric Units - mg/kg of aluminum produced from electrolytic reduction English Units - lbs/million lbs of aluminum produced from electrolytic reduction		
Acenaphthene	0.000	0.000
Benzo(a)anthracene	0.000	0.000
*Benzo(a)pyrene	0.000	0.000
Benzo(ghi)perylene	0.000	0.000
Chrysene	0.000	0.000
Dibenzo(a,h)anthracene	0.000	0.000
Fluoranthene	0.000	0.000
Pyrene	0.000	0.000
Antimony	0.000	0.000
Arsenic	0.000	0.000
Cadmium	0.000	0.000
Chromium	0.000	0.000
Copper	0.000	0.000
*Fluoride	0.000	0.000
Lead	0.000	0.000
*Nickel	0.000	0.000
Selenium	0.000	0.000
Zinc	0.000	0.000

*Regulated Pollutant

TABLE XII-2 (Continued)

PSNS FOR THE PRIMARY ALUMINUM SUBCATEGORY

Pot Repair and Pot Soaking

Pollutant or Pollutant Property	Maximum for Any One Day	Maximum for Monthly Average
Metric Units - mg/kg of aluminum produced from electrolytic reduction English Units - lbs/million lbs of aluminum produced from electrolytic reduction		
Acenaphthene	0.000	0.000
Benzo(a)anthracene	0.000	0.000
*Benzo(a)pyrene	0.000	0.000
Benzo(ghi)perylene	0.000	0.000
Chrysene	0.000	0.000
Dibenzo(a,h)anthracene	0.000	0.000
Fluoranthene	0.000	0.000
Pyrene	0.000	0.000
Antimony	0.000	0.000
Arsenic	0.000	0.000
Cadmium	0.000	0.000
Chromium	0.000	0.000
Copper	0.000	0.000
*Fluoride	0.000	0.000
Lead	0.000	0.000
*Nickel	0.000	0.000
Selenium	0.000	0.000
Zinc	0.000	0.000

*Regulated Pollutant

TABLE XII-2 (Continued)

PSNS FOR THE PRIMARY ALUMINUM SUBCATEGORY

Direct Chill Casting Contact Cooling

Pollutant or Pollutant Property	Maximum for Any One Day	Maximum for Monthly Average
Metric Units - mg/kg of aluminum product from direct chill casting English Units - lbs/million lbs of aluminum product from direct chill casting		
Acenaphthene	0.045	0.021
Benzo(a)anthracene	0.103	0.048
*Benzo(a)pyrene	0.045	0.021
Benzo(ghi)perylene	0.045	0.021
Chrysene	0.103	0.048
Dibenzo(a,h)anthracene	0.045	0.021
Fluoranthene	0.520	0.240
Pyrene	0.354	0.164
Antimony	2.565	1.143
Arsenic	1.847	0.824
Cadmium	0.266	0.106
Chromium	0.492	0.199
Copper	1.701	0.811
*Fluoride	79.080	35.090
Lead	0.372	0.173
*Nickel	0.731	0.492
Selenium	1.090	0.492
Zinc	1.356	0.558

*Regulated Pollutant

Table X11-2 (Continued)

PSNS FOR THE PRIMARY ALUMINUM SUBCATEGORY

Continuous Rod Casting Contact Cooling

Pollutant or Pollutant Property	Maximum for Any One Day	Maximum for Monthly Average
Metric Units - mg/kg of aluminum product from rod casting English Units - lbs/million lbs of aluminum product from rod casting		
Acenaphthene	0.004	0.002
Benzo(a)anthracene	0.008	0.004
*Benzo(a)pyrene	0.004	0.002
Benzo(ghi)perylene	0.004	0.002
Chrysene	0.008	0.004
Dibenzo(a,h)anthracene	0.004	0.002
Fluoranthene	0.041	0.019
Pyrene	0.028	0.013
Antimony	0.201	0.089
Arsenic	0.145	0.064
Cadmium	0.021	0.008
Chromium	0.038	0.016
Copper	0.133	0.063
*Fluoride	6.188	2.746
Lead	0.029	0.014
*Nickel	0.057	0.038
Selenium	0.085	0.038
Zinc	0.106	0.044

*Regulated Pollutant

TABLE XII-2 (Continued)

PSNS FOR THE PRIMARY ALUMINUM SUBCATEGORY

Stationary Casting or Shot Casting Contact Cooling

Pollutant or Pollutant Property	Maximum for Any One Day	Maximum for Monthly Average
Metric Units - mg/kkg of aluminum product from stationary casting or shot casting English Units - lbs/billion lbs of aluminum product from stationary casting or shot casting		
Acenaphthene	0.000	0.000
Benzo(a)anthracene	0.000	0.000
*Benzo(a)pyrene	0.000	0.000
Benzo(ghi)perylene	0.000	0.000
Chrysene	0.000	0.000
Dibenzo(a,h)anthracene	0.000	0.000
Fluoranthene	0.000	0.000
Pyrene	0.000	0.000
Antimony	0.000	0.000
Arsenic	0.000	0.000
Cadmium	0.000	0.000
Chromium	0.000	0.000
Copper	0.000	0.000
*Fluoride	0.000	0.000
Lead	0.000	0.000
*Nickel	0.000	0.000
Selenium	0.000	0.000
Zinc	0.000	0.000

*Regulated Pollutant

THIS PAGE INTENTIONALLY LEFT BLANK

SECTION XIII

BEST CONVENTIONAL POLLUTANT CONTROL TECHNOLOGY

EPA is not promulgating best conventional pollutant control technology (BCT) for the primary aluminum subcategory at this time.

THIS PAGE INTENTIONALLY LEFT BLANK

(Pages 857 and 858 are omitted)

NONFERROUS METALS MANUFACTURING POINT SOURCE CATEGORY

DEVELOPMENT DOCUMENT SUPPLEMENT

for the

Secondary Aluminum Smelting Subcategory

William K. Reilly
Administrator

Rebecca Hanmer
Acting Assistant Administrator for Water

Martha Prothro, Director
Office of Water Regulations and Standards

Thomas P. O'Farrell, Director
Industrial Technology Division

Ernst P. Hall, P.E., Chief
Metals Industry Branch
and
Technical Project Officer

May 1989

U.S. Environmental Protection Agency
Office of Water
Office of Water Regulations and Standards
Industrial Technology Division
Washington, D. C. 20460

TABLE OF CONTENTS

Section		Page
I	SUMMARY AND CONCLUSIONS	867
II	RECOMMENDATIONS	871
III	INDUSTRY PROFILE	889
	Description of Secondary Aluminum Production	889
	Raw Materials	889
	Preliminary Treatment	889
	Smelting and Refining	891
	Process Wastewater Sources	893
	Other Wastewater Sources	894
	Age, Production and Process Profile	894
IV	SUBCATEGORIZATION	901
	Factors Considered in Subdividing the Secondary	901
	Aluminum Subcategory	901
	Other Factors	903
	Production Normalizing Parameters	903
V	WATER USE AND WASTEWATER CHARACTERISTICS	905
	Wastewater Sources, Discharge Rates and Characteristics	906
	Scrap Drying Wet Air Pollution Control	909
	Scrap Screening and Milling	909
	Dross Washing	909
	Demagging Wet Air Pollution Control	909
	Delacquering Wet Air Pollution Control	910
	Ingot Conveyer Casting	910
	Direct Chill Casting Contact Cooling Water	910
	Shot Casting Contact Cooling Water	911
	Stationary Casting Cooling	911
VI	SELECTION OF POLLUTANTS	943
	Conventional and Nonconventional Pollutant Parameters	944
	Conventional and Nonconventional Pollutant Parameters Selected	944
	Toxic Pollutants	945
	Toxic Pollutants Never Detected	945
	Toxic Pollutants Never Found Above Their Analytical Quantification Limit	945

TABLE OF CONTENTS

Section		Page
VI	Toxic Pollutants Present Below Concentrations Achievable by Treatment	946
	Toxic Pollutants Detected in a Small Number of Sources	946
	Toxic Pollutants Selected for Consideration for Establishing Limitations	951
VII	CONTROL AND TREATMENT TECHNOLOGIES	959
	Technical Basis of Existing Regulations	959
	Scrap Drying Wet Air Pollution Control	960
	Scrap Screening and Milling Wastewater	960
	Dross Washing Wastewater	960
	Demagging Wet Air Pollution Control	960
	Delacquering Wet Air Pollution Control	961
	Ingot Conveyer Casting Contact Cooling	961
	Shot Casting Contact Cooling	962
	Control and Treatment Options Considered	962
	Option A	962
	Option C	962
	Control and Treatment Options Rejected	963
VIII	COSTS, ENERGY AND NONWATER QUALITY ASPECTS	965
	Treatment Options Considered	965
	Option A	965
	Option C	965
	Cost Methodology	966
	Nonwater Quality Aspects	967
	Energy Requirements	967
	Solid Waste	967
	Air Pollution	968
IX	BEST PRACTICABLE CONTROL TECHNOLOGY CURRENTLY AVAILABLE	973
X	BEST AVAILABLE TECHNOLOGY ECONOMICALLY ACHIEVABLE	975
	Technical Approach to BAT	976
	Option A	977
	Recycle of Casting Contact Cooling Water	977
	Recycle of Water Used in Wet Air Pollution Control	977
	Option C	978

TABLE OF CONTENTS

Section		Page
X	Industry Cost and Pollutant Removal Estimates	978
	Pollutant Removal Estimates	978
	Compliance Costs	979
	BAT Option Selection	979
	Wastewater Discharge Rates	981
	Scrap Drying Wet Air Pollution Control Wastewater	981
	Scrap Screening and Milling	981
	Dross Washing Wastewater	981
	Demagging Wet Air Pollution Control	982
	Delacquering Wet Air Pollution Control	983
	Direct Chill Casting Contact Cooling Water	983
	Ingot Conveyer Casting Contact Cooling Water	984
	Stationary Casting Contact Cooling Water	984
	Shot Casting Contact Cooling Water	985
	Regulated Pollutant Parameters	985
	Effluent Limitations	986
XI	New Source Performance Standards	997
	Introduction	997
	Technical Approach to BDT	998
	BDT Option Selection	998
	Regulated Pollutant Parameters	998
	New Source Performance Standards	999
XII	PRETREATMENT STANDARDS	1007
	Technical Approach to Pretreatment	1007
	Pretreatment Standards for Existing and New Sources	1008
	Option A	1008
	Option C	1008
	Industry Cost and Pollutant Removal Estimates	1009
	PSES and PSNS Option Selection	1009
	Regulated Pollutant Parameters	1009
	Pretreatment Standards	1010
XIII	BEST CONVENTIONAL POLLUTANT CONTROL TECHNOLOGY	1025

LIST OF TABLES

Table	Title	Page
III-1	Initial Operating Year Summary of Plants in the Secondary Aluminum Subcategory by Discharge Type	895
III-2	Production Ranges for Smelters and Refiners of the Secondary Aluminum Subcategory	896
III-3	Summary of Subcategory Processes and Associated Waste Streams	897
V-1	Water Use and Discharge Rates for Scrap Drying Wet Air Pollution Control	912
V-2	Water Use and Discharge Rates for Scrap Screening and Milling	913
V-3	Water Use and Discharge Rates for Dross Washing	914
V-4	Secondary Aluminum Sampling Data - Dross Washing Raw Wastewater	915
V-5	Water Use and Discharge Rates for Demagging Wet Air Pollution Control	918
V-6	Secondary Aluminum Sampling Data - Demagging Scrubber Liquor Raw Wastewater	919
V-7	Water Use and Discharge Rates for Delacquering Wet Air Pollution Control	923
V-8	Water Use and Discharge Rates for Ingot Conveyer Casting	924
V-9	Water Use and Discharge Rates for Shot Casting	925
V-10	Secondary Aluminum Sampling Data - Ingot Conveyer Casting Contact Cooling Water, Raw Wastewater	926
V-11	Secondary Aluminum Sampling Data - Demagging Wet Air Pollution Control and Casting Contact Cooling Combined Raw Wastewater	927
V-12	Secondary Aluminum Sampling Data - Treatment Plant Samples, Plant A	929
V-13	Secondary Aluminum Sampling Data - Treatment Plant Samples, Plant B	931

LIST OF TABLES

Table	Title	Page
V-14	Secondary Aluminum Sampling Data - Treatment Plant Samples, Plant D	933
V-15	Secondary Aluminum Sampling Data - Treatment Plant Samples, Plant E	936
VI-1	Frequency of Occurrence of Toxic Pollutants Secondary Aluminum Raw Wastewater	953
VI-2	Toxic Pollutants Never Detected	957
VIII-1	Cost of Compliance for the Secondary Aluminum Subcategory Direct Dischargers	970
VIII-2	Cost of Compliance for the Secondary Aluminum Subcategory Indirect Dischargers	971
X-1	Current Recycle Practices Within the Secondary Aluminum Subcategory	987
X-2	Pollutant Removal Estimates for Secondary Aluminum Direct Dischargers	988
X-3	Raw Wastewater Discharge Rates for the Secondary Aluminum Subcategory	989
X-4	BAT Effluent Limitations for the Secondary Aluminum Subcategory	990
XI-1	NSPS Wastewater Discharge Rates for the Secondary Aluminum Subcategory	1000
XI-2	NSPS for the Secondary Aluminum Subcategory	1001
XII-1	Pollutant Removal Estimates for the Secondary Aluminum Indirect Dischargers	1011
XII-2	PSES Wastewater Discharge Rates for the Secondary Aluminum Subcategory	1012
XII-3	PSNS Wastewater Discharge Rates for the Secondary Aluminum Subcategory	1014
XII-4	PSES for the Secondary Aluminum Subcategory	1016
XII-5	PSNS for the Secondary Aluminum Subcategory	1020

LIST OF FIGURES

Table	Title	Page
III-1	Secondary Aluminum Smelting Process	898
III-2	Geographic Locations of Secondary Aluminum Plants	899
V-1	Sampling Sites at Secondary Aluminum Plant A	938
V-2	Sampling Sites at Secondary Aluminum Plant B	939
V-3	Sampling Sites at Secondary Aluminum Plant C	940
V-4	Sampling Sites at Secondary Aluminum Plant D	941
V-5	Sampling Sites at Secondary Aluminum Plant E	942
X-1	BAT Treatment Scheme Option A, Secondary Aluminum Subcategory	995
X-2	BAT Treatment Scheme Option C, Secondary Aluminum Subcategory	996

SECTION I

SUMMARY AND CONCLUSIONS

On April 8, 1974, EPA promulgated technology-based effluent limitations guidelines and standards for the secondary aluminum smelting subcategory of the nonferrous metals manufacturing point source category. These included BPT, and BAT, effluent limitations and NSPS and PSNS (standards). The purpose of these effluent limitations and standards was to limit the quantities of total suspended solids, chemical oxygen demand, fluoride, ammonia, aluminum, and copper, and the range of pH discharged in secondary aluminum smelting wastewaters. On December 15, 1976, EPA promulgated technology-based pretreatment standards for existing sources (PSES) in the secondary aluminum subcategory. The purpose of these standards was to limit the quantities of ammonia, oil and grease, and the range of pH introduced into publicly owned treatment works in secondary aluminum smelting wastewater discharges.

Under the settlement agreements, EPA was required to develop BAT limitations and pretreatment and new source performance standards for pollutants discharged from twenty one specific industrial point source categories, including secondary aluminum smelting taking into account a specific list of 65 pollutants and classes of pollutants. The list of 65 classes was subsequently clarified by expanding to a list of 129 specific toxic pollutants. Congress amended the Clean Water Act in 1977 to encompass most provisions of the settlement agreements, including the list of 65 classes of pollutants. As a result of the settlement agreements and the Clean Water Act Amendments, EPA undertook an extensive program to develop technology-based BAT limitations and pretreatment and new source standards for the toxic and other pollutants in the twenty one categories.

EPA promulgated modifications to BAT, NSPS, PSES and PSNS for the secondary aluminum subcategory pursuant to the provisions of the Settlement Agreement and Sections 301, 304, 306, and 307 of the Clean Water Act and as amended. Consideration must be given to incorporation of limits on priority pollutant levels in discharges in these modified standards. This supplement provides a compilation and analysis of the background material used to develop these effluent limitations and standards.

After promulgation of amendments substantially revising BAT, NSPS and pretreatment for this subcategory, the Aluminum Association, Kaiser Aluminum and Chemical Core., Reynolds Metals Company, The Aluminum Recycling Association, and others filed petitions for review of the amended regulation.

In November, 1985 the aluminum parties entered into two settlement agreements which resolved issues raised by petitioners related to the primary and secondary aluminum subcategories. In

accordance with the settlement agreements, EPA published a notice of proposed rulemaking on May 20, 1986 and solicited comments.

EPA promulgated final amendments for the Secondary Aluminum Smelting Subcategory on July 7, 1987 (52 FR 25552). The flow basis for two building blocks, ingot conveyer casting and demagging wet air pollution control, were revised based on a re-evaluation of data available in the administrative record of this rulemaking

The secondary aluminum subcategory is comprised of 47 plants. Of the 47 plants, 10 discharge directly to waters of the U.S. (rivers, lakes, or streams); 14 discharge to publicly owned treatment works (POTW); and 23 achieve zero discharge of process wastewater.

EPA first studied the secondary aluminum subcategory to determine whether differences in raw materials, final products, manufacturing processes, equipment, age and size of plants, water usage, required the development of separate effluent limitations and standards for different segments of the subcategory. This involved a detailed analysis of wastewater discharge and treated effluent characteristics, including (1) the sources and volume of water used, the processes used, and the sources of pollutants and wastewaters in the plant; and (2) the constituents of wastewaters, including toxic pollutants.

EPA also identified several distinct control and treatment technologies (both in-plant and end-of-pipe) applicable to the secondary aluminum subcategory. The Agency analyzed both historical and newly generated data on the performance of these technologies, including their nonwater quality environmental impacts (air quality impacts and solid waste generation) and energy requirements. EPA also studied various flow reduction techniques reported in the data collection portfolios (dcp) and plant visits.

Engineering costs were prepared for each of the control and treatment options considered for the subcategory. These costs were then used by the Agency to estimate the impact of implementing the various options on the subcategory. For each control and treatment option that the Agency found to be most effective and technically feasible in controlling the discharge of pollutants, the number of potential closures, number of employees affected, and impact on price were estimated. These results are reported in a separate document entitled Economic Impact Analysis of Effluent Limitations and Standards for the Nonferrous Smelting and Refining Industry (EPA number).

Based on consideration of the above factors, EPA identified various control and treatment technologies which formed the basis for BPT and selected control and treatment appropriate for each set of limitations and standards. The mass based, production related limitations and standards for BPT, BAT, NSPS, PSES and PSNS are presented in Section II.

For BAT, the Agency has built upon the BPT basis of lime precipitation and sedimentation by adding in-process control technologies, preliminary treatment of ammonia by steam stripping, preliminary treatment of phenolics by activated carbon adsorption, and multimedia filtration. In-process control technologies include recycle or reuse of process water from wet air pollution control and metal contact cooling. Filtration is added as an effluent polishing step to further reduce metals and suspended solids concentrations. To meet the BAT effluent limitations based on this technology, the secondary aluminum subcategory is estimated to incur a capital cost of $1.1 million (1982 dollars) and an annual cost of $0.64 million (1982 dollars).

The best demonstrated technology (BDT), which is the technical basis of NSPS, is equivalent to BAT with the addition of dry milling to eliminate the discharge from dross washing. In establishing BDT, EPA recognizes that new plants have the opportunity to implement the best and most efficient manufacturing processes and treatment technology. Treatment of toxic metals is based upon lime precipitation, sedimentation, and filtration. Oil skimming for the control of oil and grease and preliminary treatment of phenolics by activated carbon adsorption are also included.

Pretreatment standards for existing sources are based on the same technology as BAT. The technology basis is in-process flow reduction, ammonia steam stripping preliminary treatment, activated carbon adsorption preliminary treatment, lime precipitation, sedimentation, and multimedia filtration. To meet PSES, the secondary aluminum subcategory is estimated to incur a capital cost of $2.3 million (1982 dollars) and an annual cost of $1.4 million (1982 dollars).

For pretreatment standards for new sources, the technology basis of in-process flow reduction, preliminary treatment, and end-of-pipe technology is equivalent to NSPS. As such, PSNS are identical to NSPS for all waste streams.

THIS PAGE INTENTIONALLY LEFT BLANK

SECTION II

RECOMMENDATIONS

This section contains a summary of the effluent limitations and standards which apply to the secondary aluminum subcategory taking into account the promulgated amendments of March 8, 1984 and July 7, 1987.

1. EPA has divided the secondary aluminum subcategory into nine subdivisions or building blocks for the purpose of effluent limitations and standards. These building blocks are:

(a) Scrap drying wet air pollution control,
(b) Scrap screening and milling,
(c) Dross washing,
(d) Demagging wet air pollution control,
(e) Delacquering wet air pollution control,
(f) Direct chill casting contact cooling,
(g) Stationary casting contact cooling,
(h) Ingot conveyer casting contact cooling, and (i) Shot casting contact cooling.

2. EPA promulgated BPT effluent limitations for the secondary aluminum subcategory on April 8, 1974, as Subpart C of 40 CFR Part 421. EPA has not promulgated any modifications to BPT effluent limitations. The BPT effluent limitations apply to discharges resulting from magnesium removal processes (demagging using either chlorine or aluminum fluoride) and wet residue processes. BPT was promulgated based on the performance achievable by the application of chemical precipitation and sedimentation (lime and settle) technology. The following BPT effluent limitations were promulgated for existing sources:

(a) The following limitations establish the quantity or quality of pollutants or pollutant properties, which may be discharged by a point source subject to the provisions of this subpart and which uses water for metal cooling, after application of the best practicable control technology currently available: There shall be no discharge of process wastewater pollutants to navigable waters.

(b) The following limitations establish the quantity or quality of pollutants or pollutant properties which may be discharged by a point source subject to the provisions of this subpart and which uses aluminum fluoride in its magnesium removal process ("demagging process"), after application of the best practicable control technology currently available: There shall be no discharge of process wastewater pollutants to navigable waters.

(c) The following limitations establish the quantity or quality of pollutants or pollutant properties controlled by this section, which may be discharged by a point source subject to the provisions of this subpart and which uses chlorine in its magnesium removal process, after application of the best practicable control technology currently available:

Effluent Characteristic	Effluent Limitations Average of daily values for 30 consecutive days shall not exceed
	Metric units (kilograms per 1,000 kg magnesium removed) English units (lbs per 1,000 lbs magnesium removed)
TSS	175
COD	6.5
pH	Within the range of 7.5 to 9.0

(d) The following limitations establish the quantity or quality of pollutants or pollutant properties which may be discharged by a point source subject to the provisions of this subpart and which processes residues by wet methods, after application of the best practical control technology currently available:

Effluent Characteristic	Effluent Limitations Average of daily values for 30 consecutive days shall not exceed
	Metric units (kilograms per 1,000 kg of product removed) English units (lbs per 1,000 lbs of product removed)
TSS	1.5
Fluoride	0.4
Ammonia (as N)	0.01
Aluminum	1.0
Copper	0.003
COD	1.0
pH	Within the range of 7.5 to 9.0

3. EPA is modifying BAT effluent limitations to take into account the performance achievable by the application of chemical precipitation, sedimentation, and multimedia filtration (lime, settle, and filter) technology, along with preliminary treatment consisting of ammonia steam stripping and activated carbon adsorption for selected waste streams. The following BAT effluent limitations are promulgated for existing sources:

(a) Scrap Drying Wet Air Pollution Control

BAT EFFLUENT LIMITATIONS

Pollutant or Pollutant Property	Maximum for Any One Day	Maximum for Monthly Average
Metric Units - mg/kg of aluminum scrap dried English Units - lbs/million lbs of aluminum scrap dried		
Lead	0.000	0.000
Zinc	0.000	0.000
Aluminum	0.000	0.000
Ammonia (as N)	0.000	0.000

(b) Scrap Screening and Milling

BAT EFFLUENT LIMITATIONS

Pollutant or Pollutant Property	Maximum for Any One Day	Maximum for Monthly Average
Metric Units - mg/kg of aluminum scrap screened and milled English Units - lbs/million lbs of aluminum scrap screened and milled		
Lead	0.000	0.000
Zinc	0.000	0.000
Aluminum	0.000	0.000
Ammonia (as N)	0.000	0.000

(c) Dross Washing

BAT EFFLUENT LIMITATIONS

Pollutant or Pollutant Property	Maximum for Any One Day	Maximum for Monthly Average
Metric Units - mg/kg of dross washed English Units - lbs/million lbs of dross washed		
Lead	3.043	1.413
Zinc	11.090	4.565
Aluminum	66.410	29.450
Ammonia (as N)	1,449.000	636.900

(d) Demagging Wet Air Pollution Control

BAT EFFLUENT LIMITATIONS

Pollutant or Pollutant Property	Maximum for Any One Day	Maximum for Monthly Average
Metric Units - mg/kg of aluminum demagged English Units - lbs/million lbs of aluminum demagged		
Lead	0.216	0.100
Zinc	0.786	0.324
Aluminum	4.711	2.090
Ammonia (as N)	102.800	45.180

(e) Delacquering Wet Air Pollution Control

BAT EFFLUENT LIMITATIONS

Pollutant or Pollutant Property	Maximum for Any One Day	Maximum for Monthly Average
Metric Units - mg/kg of aluminum delacquered English Units - lbs/million lbs of aluminum delacquered		
Lead	0.022	0.010
Zinc	0.082	0.034
Aluminum	0.489	0.217
Ammonia (as N)	10.670	4.688
Total Phenols (4-AAP Method)*	0.001	--

*At the source

(f) Direct Chill Casting Contact Cooling

BAT EFFLUENT LIMITATIONS

Pollutant or Pollutant Property	Maximum for Any One Day	Maximum for Monthly Average
Metric Units - mg/kg of aluminum cast English Units - lbs/million lbs of aluminum cast		
Lead	0.372	0.173
Zinc	1.356	0.558
Aluminum	8.120	3.602
Ammonia (as N)	177.200	77.880

(g) Ingot Conveyer Casting Contact Cooling (When Chlorine Demagging Wet Air Pollution Control is Not Practiced On-Site)

BAT EFFLUENT LIMITATIONS

Pollutant or Pollutant Property	Maximum for Any One Day	Maximum for Monthly Average
Metric Units - mg/kg of aluminum cast English Units - lbs/million lbs of aluminum cast		
Lead	0.019	0.009
Zinc	0.068	0.028
Aluminum	0.409	0.182
Ammonia (as N)	8.931	3.926

(h) Ingot Conveyer Casting Contact Cooling (When Chlorine Demagging Wet Air Pollution Control is Practiced On-Site)

BAT EFFLUENT LIMITATIONS

Pollutant or Pollutant Property	Maximum for Any One Day	Maximum for Monthly Average
Metric Units - mg/kg of aluminum cast English Units - lbs/million lbs of aluminum cast		
Lead	0.000	0.000
Zinc	0.000	0.000
Aluminum	0.000	0.000
Ammonia (as N)	0.000	0.000

(i) Stationary Casting Contact Cooling

BAT EFFLUENT LIMITATIONS

Pollutant or Pollutant Property	Maximum for Any One Day	Maximum for Monthly Average
Metric Units - mg/kg of aluminum cast English Units - lbs/million lbs of aluminum cast		
Lead	0.000	0.000
Zinc	0.000	0.000
Aluminum	0.000	0.000
Ammonia (as N)	0.000	0.000

(j) Shot Casting Contact Cooling

BAT EFFLUENT LIMITATIONS

Pollutant or Pollutant Property	Maximum for Any One Day	Maximum for Monthly Average
Metric Units - mg/kg of aluminum cast English Units - lbs/million lbs of aluminum cast		
Lead	0.000	0.000
Zinc	0.000	0.000
Aluminum	0.000	0.000
Ammonia (as N)	0.000	0.000

4. EPA is modifying NSPS based on the performance achievable by the application of chemical precipitation, sedimentation, and multimedia filtration (lime, settle, and filter) technology, along with preliminary treatment consisting of activated carbon adsorption and oil skimming for selected waste streams. The following effluent standards are promulgated for new sources:

(a) Scrap Drying Wet Air Pollution Control NSPS

Pollutant or Pollutant Property	Maximum for Any One Day	Maximum for Monthly Average
Metric Units - mg/kg of aluminum scrap dried English Units - lbs/million lbs of aluminum scrap dried		
Lead	0.000	0.000
Zinc	0.000	0.000
Aluminum	0.000	0.000
Ammonia (as N)	0.000	0.000
Oil and Grease	0.000	0.000
TSS	0.000	0.000
pH	Within the range of 7.0 to 10.0 at all times	

(b) Scrap Screening and Milling NSPS

Pollutant or Pollutant Property	Maximum for Any One Day	Maximum for Monthly Average
Metric Units - mg/kg of aluminum scrap screened and milled English Units - lbs/million lbs of aluminum scrap screened and milled		
Lead	0.000	0.000
Zinc	0.000	0.000
Aluminum	0.000	0.000
Ammonia (as N)	0.000	0.000
Oil and Grease	0.000	0.000
TSS	0.000	0.000
pH	Within the range of 7.0 to 10.0 at all times	

(c) Dross Washing NSPS

Pollutant or Pollutant Property	Maximum for Any One Day	Maximum for Monthly Average
Metric Units - mg/kg of dross washed English Units - lbs/million lbs of dross washed		
Lead	0.000	0.000
Zinc	0.000	0.000
Aluminum	0.000	0.000
Ammonia (as N)	0.000	0.000
Oil and Grease	0.000	0.000
TSS	0.000	0.000
pH	Within the range of 7.0 to 10.0 at all times	

(d) Demagging Wet Air Pollution Control NSPS

Pollutant or Pollutant Property	Maximum for Any One Day	Maximum for Monthly Average
Metric Units - mg/kg of aluminum demagged English Units - lbs/million lbs of aluminum demagged		
Lead	0.216	0.100
Zinc	0.786	0.324
Aluminum	4.711	2.090
Ammonia (as N)	102.800	45.180
Oil and Grease	7.710	7.710
TSS	11.570	9.252
pH	Within the range of 7.0 to 10.0 at all times	

(e) Delacquering Wet Air Pollution Control NSPS

Pollutant or Pollutant Property	Maximum for Any One Day	Maximum for Monthly Average
Metric Units - mg/kg of aluminum delacquered English Units - lbs/million lbs of aluminum delacquered		
Lead	0.022	0.010
Zinc	0.082	0.034
Aluminum	0.489	0.217
Ammonia (as N)	10.670	4.688
Total Phenols (4-AAP Method)*	0.001	--
TSS	1.200	0.960
Oil and Grease	0.800	0.800
pH	Within the range of 7.0 to 10.0 at all times	

*At the source

(f) Direct Chill Casting Contact Cooling NSPS

Pollutant or Pollutant Property	Maximum for Any One Day	Maximum for Monthly Average
Metric Units - mg/kg of aluminum cast English Units - lbs/million lbs of aluminum cast		
Lead	0.372	0.173
Zinc	1.356	0.558
Aluminum	8.120	3.602
Ammonia (as N)	177.200	77.880
Oil and Grease	13.290	13.290
TSS	19.940	15.950
pH	Within the range of 7.0 to 10.0 at all times	

(g) Ingot Conveyer Casting Contact Cooling NSPS (When Chlorine Demagging Wet Air Pollution Control is Not Practiced On-Site)

Pollutant or Pollutant Property	Maximum for Any One Day	Maximum for Monthly Average
Metric Units - mg/kg of aluminum cast English Units - lbs/million lbs of aluminum cast		
Lead	0.019	0.009
Zinc	0.068	0.028
Aluminum	0.409	0.182
Ammonia (as N)	8.931	3.926
TSS	1.005	0.804
Oil and Grease	0.670	0.670
pH	Within the range of 7.0 to 10.0 at all times	

(h) Ingot Conveyer Casting Contact Cooling NSPS (When Chlorine Demagging Wet Air Pollution Control is Practiced On-Site)

Pollutant or Pollutant Property	Maximum for Any One Day	Maximum for Monthly Average
Metric Units - mg/kg of aluminum cast English Units - lbs/million lbs of aluminum cast		
Lead	0.000	0.000
Zinc	0.000	0.000
Aluminum	0.000	0.000
Ammonia (as N)	0.000	0.000
TSS	0.000	0.000
Oil and Grease	0.000	0.000
pH	Within the range of 7.0 to 10.0 at all times	

(i) Stationary Casting Contact Cooling NSPS

Pollutant or Pollutant Property	Maximum for Any One Day	Maximum for Monthly Average
Metric Units - mg/kg of aluminum cast English Units - lbs/million lbs of aluminum cast		
Lead	0.000	0.000
Zinc	0.000	0.000
Aluminum	0.000	0.000
Ammonia (as N)	0.000	0.000
Oil and Grease	0.000	0.000
TSS	0.000	0.000
pH	Within the range of 7.0 to 10.0 at all times	

(j) Shot Casting Contact Cooling NSPS

Pollutant or Pollutant Property	Maximum for Any One Day	Maximum for Monthly Average
Metric Units - mg/kg of aluminum cast English Units - lbs/million lbs of aluminum cast		
Lead	0.000	0.000
Zinc	0.000	0.000
Aluminum	0.000	0.000
Ammonia (as N)	0.000	0.000
Oil and Grease	0.000	0.000
TSS	0.000	0.000
pH	Within the range of 7.0 to 10.0 at all times	

5. EPA is modifying PSES based on the performance achievable by the application of chemical precipitation, sedimentation, and multimedia filtration (lime, settle, and filter) technology, along with preliminary treatment consisting of ammonia steam stripping and activated carbon adsorption for selected waste streams. The following mass-based pretreatment standards are promulgated for existing sources:

(a) Scrap Drying Wet Air Pollution Control PSES

Pollutant or Pollutant Property	Maximum for Any One Day	Maximum for Monthly Average
Metric Units - mg/kg of aluminum scrap dried English Units - lbs/million lbs of aluminum scrap dried		
Lead	0.000	0.000
Zinc	0.000	0.000
Ammonia (as N)	0.000	0.000

(b) Scrap Screening and Milling PSES

Pollutant or Pollutant Property	Maximum for Any One Day	Maximum for Monthly Average
Metric Units - mg/kg of aluminum scrap screened and milled English Units - lbs/million lbs of aluminum scrap screened and milled		
Lead	0.000	0.000
Zinc	0.000	0.000
Ammonia (as N)	0.000	0.000

(c) Dross Washing PSES

Pollutant or Pollutant Property	Maximum for Any One Day	Maximum for Monthly Average
Metric Units - mg/kg of dross washed English Units - lbs/million lbs of dross washed		
Lead	3.043	1.413
Zinc	11.090	4.565
Ammonia (as N)	1,449.000	636.000

(d) Demagging Wet Air Pollution Control PSES

Pollutant or Pollutant Property	Maximum for Any One Day	Maximum for Monthly Average
Metric Units - mg/kg of aluminum demagged English Units - lbs/million lbs of aluminum demagged		
Lead	0.216	0.100
Zinc	0.786	0.324
Ammonia (as N)	102.800	45.180

(e) Delacquering Wet Air Pollution Control PSES

Pollutant or Pollutant Property	Maximum for Any One Day	Maximum for Monthly Average
Metric Units - mg/kg of aluminum delacquered English Units - lbs/million lbs of aluminum delacquered		
Lead	0.022	0.010
Zinc	0.082	0.034
Ammonia (as N)	10.670	4.688
Total Phenols (4-AAP Method)*	0.001	--

*At the source

(f) Direct Chill Casting Contact Cooling PSES

Pollutant or Pollutant Property	Maximum for Any One Day	Maximum for Monthly Average
Metric Units - mg/kg of aluminum cast English Units - lbs/billion lbs of aluminum cast		
Lead	0.372	0.173
Zinc	1.356	0.558
Ammonia (as N)	177.200	77.800

(g) Ingot Conveyer Casting Contact Cooling PSES (When Chlorine Demagging Wet Air Pollution Control is Not Practiced On-Site)

Pollutant or Pollutant Property	Maximum for Any One Day	Maximum for Monthly Average
Metric Units - mg/kg of aluminum cast English Units - lbs/million lbs of aluminum cast		
Lead	0.019	0.009
Zinc	0.068	0.028
Ammonia (as N)	8.931	3.926

(h) Ingot Conveyer Casting Contact Cooling PSES (When Chlorine Demagging Wet Air Pollution Control is Practiced On-Site)

Pollutant or Pollutant Property	Maximum for Any One Day	Maximum for Monthly Average
Metric Units - mg/kg of aluminum cast English Units - lbs/million lbs of aluminum cast		
Lead	0.000	0.000
Zinc	0.000	0.000
Ammonia (as N)	0.000	0.000

(i) Stationary Casting Contact Cooling PSES

Pollutant or Pollutant Property	Maximum for Any One Day	Maximum for Monthly Average
Metric Units - mg/kg of aluminum cast English Units - lbs/million lbs of aluminum cast		
Lead	0.000	0.000
Zinc	0.000	0.000
Ammonia (as N)	0.000	0.000

(j) Shot Casting Contact Cooling PSES

Pollutant or Pollutant Property	Maximum for Any One Day	Maximum for Monthly Average
Metric Units - mg/kg of aluminum cast English Units - lbs/million lbs of aluminum cast		
Lead	0.000	0.000
Zinc	0.000	0.000
Ammonia (as N)	0.000	0.000

7. EPA is modifying PSNS based on the performance achievable by the application of chemical precipitation, sedimentation, and multimedia filtration (lime, settle, and filter) technology, along with preliminary treatment consisting of activated carbon adsorption for the delacquering wet air pollution control waste stream. The following mass-based pretreatment standards are promulgated for new sources:

(a) Scrap Drying Wet Air Pollution Control PSNS

Pollutant or Pollutant Property	Maximum for Any One Day	Maximum for Monthly Average
Metric Units - mg/kg of aluminum scrap dried English Units - lbs/million lbs of aluminum scrap dried		
Lead	0.000	0.000
Zinc	0.000	0.000
Ammonia (as N)	0.000	0.000

(b) Scrap Screening and Milling PSNS

Pollutant or Pollutant Property	Maximum for Any One Day	Maximum for Monthly Average
Metric Units - mg/kg of aluminum scrap screened and milled English Units - lbs/million lbs of aluminum scrap screened and milled		
Lead	0.000	0.000
Zinc	0.000	0.000
Ammonia (as N)	0.000	0.000

(c) Dross Washing PSNS

Pollutant or Pollutant Property	Maximum for Any One Day	Maximum for Monthly Average
Metric Units - mg/kg of dross washed English Units - lbs/million lbs of dross washed		
Lead	0.000	0.000
Zinc	0.000	0.000
Ammonia (as N)	0.000	0.000

(d) Demagging Wet Air Pollution Control PSNS

Pollutant or Pollutant Property	Maximum for Any One Day	Maximum for Monthly Average
Metric Units - mg/kkg of aluminum demagged English Units - lbs/billion lbs of aluminum demagged		
Lead	0.216	0.100
Zinc	0.786	0.324
Ammonia (as N)	102.800	45.180

(e) Delacquering Wet Air Pollution Control PSNS

Pollutant or Pollutant Property	Maximum for Any One Day	Maximum for Monthly Average
Metric Units - mg/kg of aluminum delacquered English Units - lbs/million lbs of aluminum delacquered		
Lead	0.022	0.010
Zinc	0.082	0.034
Ammonia (as N)	10.670	4.688
Total Phenols (4-AAP Method)*	0.001	--

*At the source

(f) Direct Chill Casting Contact Cooling PSNS

Pollutant or Pollutant Property	Maximum for Any One Day	Maximum for Monthly Average
Metric Units - mg/kg of aluminum cast English Units - lbs/million lbs of aluminum cast		
Lead	0.372	0.173
Zinc	1.356	0.558
Ammonia (as N)	177.200	77.880

(g) Ingot Conveyer Casting Contact Cooling PSNS (When Chlorine Demagging Wet Air Pollution Control is Not Practiced On-Site)

Pollutant or Pollutant Property	Maximum for Any One Day	Maximum for Monthly Average
mg/kg (lb/million lbs) of aluminum cast		
Lead	0.019	0.009
Zinc	0.068	0.028
Ammonia (as N)	8.931	3.926

(h) Ingot Conveyer Casting Contact Cooling PSNS (When Chlorine Demagging Wet Air Pollution Control is Practiced On-Site)

Pollutant or Pollutant Property	Maximum for Any One Day	Maximum for Monthly Average
	mg/kg (lb/million lbs) of aluminum cast	
Lead	0.000	0.000
Zinc	0.000	0.000
Ammonia (as N)	0.000	0.000

(i) Stationary Casting Contact Cooling PSNS

Pollutant or Pollutant Property	Maximum for Any One Day	Maximum for Monthly Average
	Metric Units - mg/kg of aluminum cast English Units - lbs/million lbs of aluminum cast	
Lead	0.000	0.000
Zinc	0.000	0.000
Ammonia (as N)	0.000	0.000

(j) Shot Casting Contact Cooling PSNS

Pollutant or Pollutant Property	Maximum for Any One Day	Maximum for Monthly Average
	Metric Units - mg/kg of aluminum cast English Units - lbs/million lbs of aluminum cast	
Lead	0.000	0.000
Zinc	0.000	0.000
Ammonia (as N)	0.000	0.000

SECTION III

INDUSTRY PROFILE

This section of the Secondary Aluminum Supplement describes the raw materials and processes used in producing recycled aluminum and presents a profile of the secondary aluminum plants identified in this study.

DESCRIPTION OF SECONDARY ALUMINUM PRODUCTION

Secondary aluminum production involves two basic process steps: pretreatment and smelting and refining. A pretreatment step is required before smelting and refining operations can be under taken because this industry uses scrap aluminum (much of which is contaminated) for its raw material. The two processes, their components, and variations are discussed below. Figure III-1 (page 898) represents a general flow diagram of the two process steps.

RAW MATERIALS

The secondary aluminum subcategory uses aluminum-bearing scrap to produce metallic aluminum and aluminum alloys. Much of the scrap used is purchased from scrap dealers of industrial plants. There are six primary classifications of scrap processed: aluminum cans, old sheet and castings, new clippings and forgings, borings and turnings, residues, and high iron.

New scrap is produced during the manufacture of a finished product and originates from the aircraft industry, aluminum formers, and other manufacturing plants. Old scrap (sheet and castings) is comprised of worn out, damaged or obsolete articles and includes automobile parts, household items, and airplane parts. Borings and turnings are by-products of the machining of castings, rods, and forgings by the aircraft and automobile industry. Residues consist of drosses, skimmings, and slags which are obtained from primary reduction plants, secondary smelting plants, casting plants, and foundries. Foil from discarded packaging constitutes a minor source of raw material for this subcategory. High iron aluminum scrap which is to be reused in the secondary aluminum subcategory require more extensive treatment before smelting than other classifications scrap aluminum.

PRELIMINARY TREATMENT

Preliminary treatment of scrap involves preparing the material for further processing and removing contaminants. As Figure III-1 (page 898) indicates, the scrap pretreatment process varies depending on the source and type of raw material being handled. There is also variation in the degree to which scrap is pretreated among facilities. There are three general methods of

pretreating: mechanical, hydrometallurgical, and pyrometallurgical, with the method used being dependent on the type of scrap. The mechanical method involves shredding and classifying, baling, and milling and screening. Hydrometallurgical treatment involves leaching with water, and pyrometallurgical processing involves burning and drying, and sweating. Depending on the type of raw material, pretreatment may consist of a combination of these methods before smelting and refining is effected.

Old sheet, castings, and clippings preparation is a dry process that can vary from no pretreatment to crushing and screening that compacts the scrap. New clippings and forgings usually require little preparation other than sorting; however, they may be contaminated with cutting oils, and may require crushing and drying to remove the oils. Can scrap is often pretreated by burning the lacquer from the cans prior to smelting or remelting. Organic fumes emitted during this process are an air pollution source. Wet scrubbers are normally chosen over afterburners and baghouses to control emissions because of the explosion hazard that exists. Cable, which is not considered a major source of aluminum scrap requires shredding and classifying to remove the insulation and ferrous portions from the aluminum. The borings and burnings are also often contaminated by cutting oils and require burning or drying to remove that contaminant. The entire procedure consists of (1) crushing the borings and turnings to compact the scrap, (2) heating the scrap in an oil or gas-fired rotary dryer to remove organic material and water, (3) screening to remove aluminum fines, and (4) magnetically removing the tramp iron.

Aluminum and other metals from junked automobiles are recovered in a water elutriator system where scrap auto body parts are separated from light waste materials based on specific gravity differences. Water, or other flotation media, flow upward and separate the lightweight materials from the metal which continues to sink. Metal collected at the bottom of the system is removed with a perforated conveyer, and the water drains into a holding tank for settling and then returns to the system.

Residues, such as drosses, skimmings, and slags, contain 10 to 30 percent aluminum, as well as oxides, carbides, nitrides, fluxing salts, and other contaminants. Metallic aluminum can be liberated from the impurities using either dry or wet processes. The dry process consists of milling, screening, and magnetic separation for iron removal. The wet process involves milling and leaching with water to remove the contaminants. The washed material is then screened, dried, and passed through a magnetic separator. Heavy metallic skims, a minor source of aluminum, require little pretreatment.

Foil, which is another minor source of raw material for the subcategory, is usually pretreated by roasting to remove paper or wax backings. High iron content scrap often is subjected to sweating treatment to remove impurities. This process involves

placing the iron-contaminated aluminum in a sweating furnace. This furnace has sloped sides and the molten aluminum flows down the slope, leaving the higher melting point materials such as iron behind. Alternately, the high iron scrap also can be purified by crushing it and removing the iron magnetically.

SMELTING AND REFINING

The second step of the manufacturing process for the secondary aluminum subcategory is smelting and refining. This step actually consists of five substeps: charging scrap to the furnace; addition of fluxing agents; addition of alloying agents; demagging or degassing; and skimming.

Charging of scrap into the furnace can be a batch process or a continuous process. Each cycle, called a "heat", will vary in length depending on the process. Charging wells are often designed to permit the introduction of chips and scrap below the surface of a previously melted charge called a "heel." This design not only minimizes oxidation, but provides for more efficient application of pollution control systems.

The next step is fluxing the molten charge. There are two general types of fluxes: cover fluxes that are used to reduce oxidation of the melt by air, and solvent fluxes that react with contaminants such as nonmetallics, residues from burned coatings, and dirt to form insolubles which float on the surface of the melt as slag.

Next, alloying agents are added to the melt in varying amounts according to production specifications. Copper, silicon, manganese, or zinc are typical alloys added. Mixing the furnace contents is necessary to assure uniform composition. Nitrogen or other inert gases may be injected to aid in the mixing. Magnesium is another alloying agent used. However, scrap aluminum, received by the secondary aluminum smelters averages about 0.3 to 0.5 percent magnesium, while the product line of alloys produced averages about 0.1 percent. Therefore, after the furnace is fully charged and the melt brought up to the desired chemical specification, it is usually necessary to remove the excess magnesium (known as "demagging").

Demagging is accomplished with chlorine or chlorinating agents, such as anyhdrous aluminum chloride or with aluminum fluoride. Magnesium chloride or magnesium fluoride is formed and collected in the fluxing agents on top of the molten melt. As the magnesium is depleted, chlorine will consume aluminum and the excess aluminum chloride or aluminum fluoride present volatilizes into the surrounding air and is a source of air pollution.

Magnesium is the only metal removable from the alloy in this manner. Other metal alloy levels must be adjusted by the addition of either more aluminum (dilution) or more of the metal.

Chlorination is performed at temperatures between 760 and 815°C.

As a rule of thumb, the reaction requires 3.5 kilograms of chlorine per kilogram of magnesium removed. Elemental chlorine gas is fed under pressure through tubes or lances to the bottom of the melt. As it bubbles through the melt, it reacts with magnesium and aluminum to form chlorides, which float to the melt surface where they combine with the fluxing agents and are skimmed off. Because magnesium is above aluminum in the electromotive series, aluminum chloride will be reduced by any available magnesium in the melt. At the beginning of the demagging cycle, the principal reaction product is magnesium chloride. As magnesium is removed and there is less available for reaction with chlorine, the reaction of chlorine with aluminum becomes more significant, the reduction of the aluminum chloride by magnesium becomes less likely, and the production of aluminum chloride, a volatile compound, becomes significant. The aluminum chloride escapes and considerable fuming results from the chlorination, making ventilation and air pollution equipment necessary. Control of fumes is frequently accomplished by wet scrubbing and, thus, is a source of water contamination.

Aluminum fluoride as a demagging agent reacts with the magnesium to form magnesium fluoride, which in turn combines with the flux on top of the melt, where it is skimmed off. In practice, about 4.3 kilograms of aluminum fluoride are required per kilogram of magnesium removed. The air contaminants exist as gaseous fluorides or as fluoride dusts and are a source of air pollution. The fluorides are controlled by either dry or wet methods. When dry scrubbing is used, a solid waste is generated. When wet scrubbing is used, both water pollution and solid waste are generated.

Some facilities in the secondary aluminum subcategory are not limited by a magnesium content in their product, particularly the deoxidant manufacturers, and they make no attempt to remove magnesium. Therefore, these plants do not generate the magnitude of fumes produced by demagging, and as a result, do not require extensive air pollution control equipment and related water usage.

In the skimming step, the dross or slag, with its associated impurities, is skimmed from the molten aluminum. The cooled slag is stored for shipment to a residue processor, recycled, or discarded.

The product line(s) of each smelter can be categorized as specification alloy ingots, billets, hot metal, notched bar, shot, and hardeners. Specification alloy ingots, used by foundries for casting, are the most important products of the secondary aluminum subcategory. Cooling can be done with either contact or noncontact cooling water, and air cooling is also used. Ingot conveyer casting is the most predominant casting method used in the secondary aluminum subcategory. Molten aluminum is poured into ingot molds traveling on a conveyer system. The aluminum is allowed to briefly air cool prior to contacting the metal surface and mold with water. This allows

the metal surface to solidify so that the aluminum surfaces are not water marked. Enough heat is extracted from the aluminum for solidification and to prevent breaking when the aluminum is removed from the mold. Notched bar, RAI, and redox casting are three variations of ingot conveyer casting.

Direct chill casting is characterized by continuous solidification of the metal while it is being poured. The length of an ingot cast using this method is determined by the vertical distance it is allowed to drop rather than by mold dimensions. Molten aluminum is tapped from the melting furnace and flows through a distributor channel into a shallow mold. Noncontact cooling water circulates within this mold, causing solidification of the aluminum. The base of the mold is attached to a hydraulic cylinder which is gradually lowered as pouring continues. As the solidified aluminum leaves the mold, it is sprayed with contact cooling water to reduce the temperature of the forming ingot. The cylinder continues to descend into a tank of water, causing further cooling of the ingot as it is immersed. When the cylinder has reached its lowest position, pouring stops and the ingot is lifted from the pit. The hydraulic cylinder is then raised and positioned for another casting cycle.

Plants using contact cooling water recycle systems generate intermittent discharges (accompanied with sludge removal). Billets, manufactured for use in extrusion plants, are cooled with noncontact water that is recycled. Sometimes the molten metal is poured directly into preheated crucibles, then shipped while still in a molten form. No water is used. Notched bar molds may be air or water cooled with either contact or noncontact water.

Aluminum shot is also used as a deoxidant in the steel industry. Molten metal is poured into a vibrating feeder, where droplets of molten metal are formed through perforated openings. The droplets are cooled in a quench tank. Water is generally recycled, and periodic sludge removal is required.

PROCESS WASTEWATER SOURCES

The primary areas of water use and wastewater production in the secondary aluminum subcategory are as follows:

1. Scrap drying wet air pollution control,
2. Scrap screening and milling,
3. Dross washing,
4. Demagging wet air pollution control,
5. Delacquering wet air pollution control,
6. Direct chill casting contact cooling water,
7. Ingot conveyer casting contact cooling, 8. Stationary casting contact cooling water, and 9. Shot casting contact cooling water.

OTHER WASTEWATER SOURCES

There are other wastewater streams associated with the production of secondary aluminum. These include but are not limited to:

1. Maintenance and cleanup water, and
2. Stormwater runoff.

These wastewaters are not considered as part of this rulemaking. EPA believes that the flows and pollutant loadings associated with these streams are insignificant relative to the wastewater streams selected, or are best handled by the appropriate permit authority on a case-by-case basis under the authority of Section 402 of the CWA.

AGE, PRODUCTION, AND PROCESS PROFILE

Figure III-2 (page 899) shows the location of 47 secondary aluminum reduction plants. Most of the plants are located in the eastern United States, and most are in urban areas near raw materials and markets. The notations within the states indicated the type of discharge the facilities use, direct (D), indirect (I), or zero (Z).

The data in Table III-1 (page 895) indicate that the majority of facilities (34) are less than 35 years old, reflecting the relatively recent development of this industry.

In addition, most facilities practice zero discharge with only 21 percent (10 facilities) discharging directly to waters of the U.S.

The data in Table III-2 (page 896) indicate that the majority of facilities produce between 5,000 and 20,000 kkg per year of secondary aluminum. Table III-3 (page 897) provides a summary of the plants having the various secondary aluminum processes; the number of plants generating wastewater from the processes is also shown.

Table III-1

INITIAL OPERATING YEAR (RANGE) SUMMARY OF PLANTS
IN THE SECONDARY ALUMINUM SUBCATEGORY BY DISCHARGE TYPE

Type of Plant Discharge	1983-1974 0-10	1973-1969 10-15	1968-1959 15-25	1958-1949 25-35	1948-1939 35-45	1938-1929 45-55	1928-1919 55-65	1918-1904 65-80	Before 1904 80+	Insuff. Data	Total
Direct	0	1	4	1	3	0	0	0	0	1	10
Indirect	1	3	3	2	1	1	2	1	0	0	14
Zero	5	1	8	5	2	0	1	1	0	0	23
Total	6	5	15	8	6	1	3	2	0	1	47

TABLE III-2

PRODUCTION RANGES FOR SMELTERS AND REFINERS OF THE SECONDARY ALUMINUM SUBCATEGORY (kkg/yr)

Production Ranges	Number of Plants
0 - 2500	4
2501 - 5000	4
5001 - 10000	16
10000 - 20000	8
20001 - 30000	3
30000 - +	3
No Data	6
Total Number of Plants in Survey	47

TABLE III-3

SUMMARY OF SUBCATEGORY PROCESSES AND ASSOCIATED WASTE STREAMS

Process	Number of Plants With Process	Number of Plants Generating Wastewater
Raw Material Preparation		
Scrap drying air pollution control	23	0
Scrap screening and milling	18	1
Dross washing	3	3
Dust air pollution control	13	0
Delacquering	5	-
air pollution control	5	5
Demagging		
air pollution control	17	17
Casting	40	-
Ingot conveyer casting	14	14
Shot casting	4	4

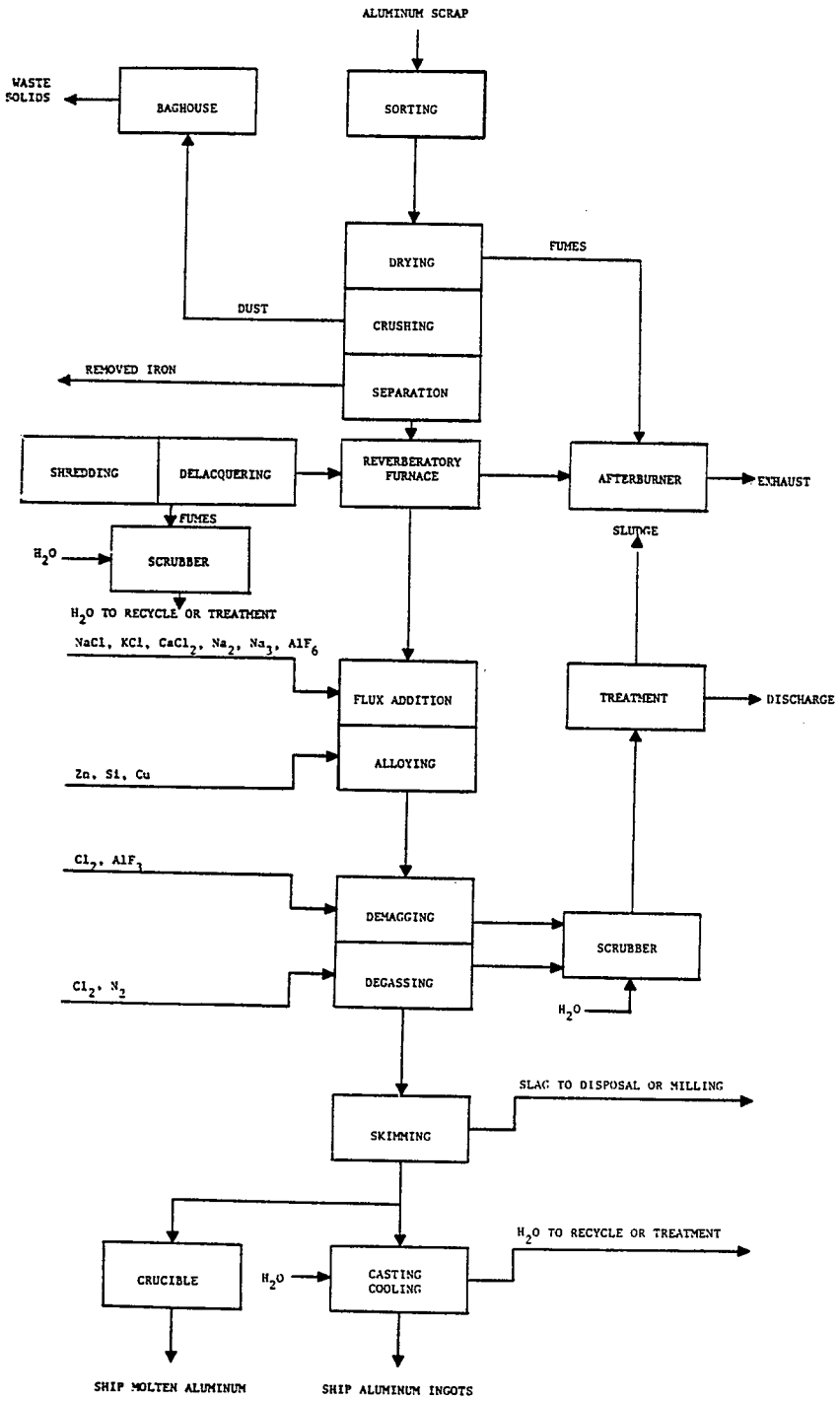

Figure III-1

SECONDARY ALUMINUM SMELTING PROCESS

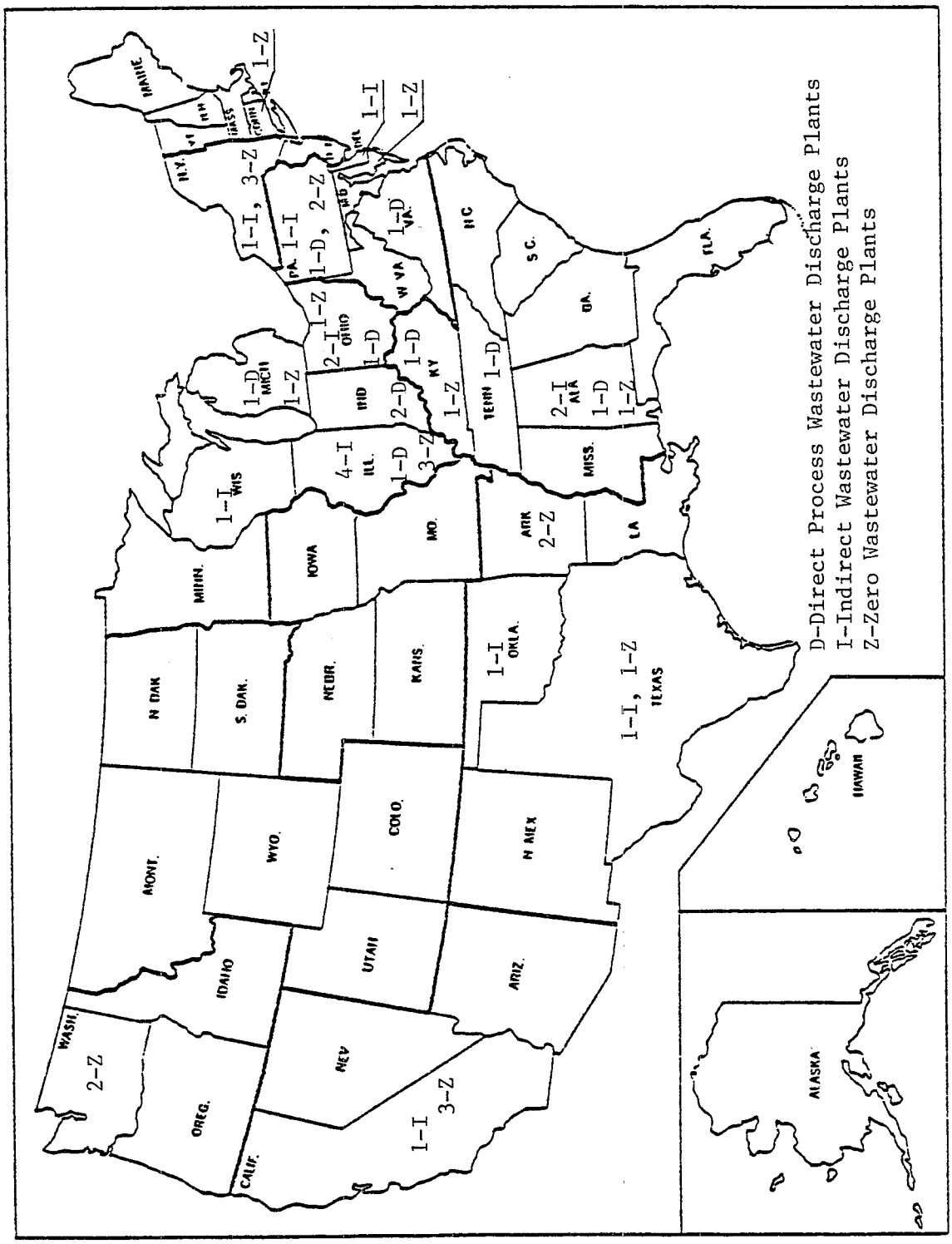

Figure III-2

GEOGRAPHIC LOCATIONS OF SECONDARY ALUMINUM PLANTS

THIS PAGE INTENTIONALLY LEFT BLANK

SECTION IV

SUBCATEGORIZATION

This section summarizes the factors considered during the designation of the secondary aluminum subcategory and its related subdivisions. Secondary aluminum was identified as a subcategory in a final regulation promulgated in 1974 and BPT, BAT, NSPS, and PSNS effluent limitations and standards were established for the secondary aluminum subcategory. The purpose of this study is to support modifications to the BAT, NSPS, and PSNS regulations.

FACTORS CONSIDERED IN SUBDIVIDING THE SECONDARY ALUMINUM SUBCATEGORY

The factors for general subcategorization were each evaluated when establishing the secondary aluminum subcategory and its subdivisions. In the discussion that follows, the factors will be described as they pertain to this particular subcategory. Subcategorization of the entire nonferrous metals industry and evaluation of the factors used in this process are discussed in Section IV of the General Development Document.

The rationale for dividing the secondary aluminum subcategory into segments or building blocks considers the diversity in source of raw materials, the use of certain manufacturing processes by only a few facilities, and the differences in available technologies for final product processing (i.e., contact cooling water, air cooling, and noncontact cooling water).

The raw materials used by secondary aluminum plants are either solid scraps (clippings and forgings, borings and turnings, and old sheet and castings) or residues from aluminum reduction and smelting. Since all secondary smelters use the various types of scraps at one time or another, the type of scrap cannot be used as a basis for subcategorization. However, many plants have scrap drying operations. Most of these plants use air pollution control devices in this process. A few plants use wet scrubbers which produce wastewater. Some facilities also use water in scrap screening and milling, generating wastewater. Therefore, scrap drying wet air pollution control and scrap screening and milling should be considered segments.

Can scrap is normally heated prior to melting to burn the lacquer contained on the cans. Wet scrubbers are normally used to control air pollution rather than afterburners and baghouses because of the explosion hazard. Explosion potential is increased if the scrap is shredded due to aluminum fines that would collect in dry scrubbing systems. Five plants operate wet scrubbers, indicating that delacquering wet air pollution control should be considered a segment.

Furnace residue processing to recover aluminum can produce a wastewater stream with treatable pollutant concentrations. Five facilities process furnace residues, and four of these use water for the processing. Since this process produces a potentially contaminated waste stream it has been identified as a segment.

Plants practicing magnesium removal (demagging), use either a chlorine or aluminum fluoride process. The demagging process requires air pollution control devices to minimize fuming. Wet scrubbing can be practiced with both types of demagging and the resulting scrubber water is usually treated by pH adjustment and settling.

Thirty-four plants demag, 20 generate wastewater from fume scrubbing. Because the demagging process can produce a contaminated wastewater, it has been identified as a segment within the secondary aluminum subcategory.

The final secondary aluminum process step is casting. The technique for cooling the aluminum into various shapes varies within the subcategory and with the product. Air cooling, water contact cooling, and water noncontact cooling are all used. When water contact cooling is used, the cooling water is frequently recycled. However, a blowdown stream may be necessary to dissipate the build-up of dissolved solids. This blowdown stream may have, in addition to treatable dissolved solids, oil and grease and phenolics, depending on whether lubricants are used in casting. This manufacturing process has also been considered to be segment within the secondary aluminum subcategory.

Within the secondary aluminum subcategory the processes that produce the wastewaters discussed previously, residue processing wastewater, demagging fume scrubber liquors, and contact cooling water, are not all present at all facilities. Some facilities may have one, others combinations of two, and still others all three. The building block approach used in this regulation accommodates these differences by establishing limitations and standards for each wastewater stream.

Limitations will be based on specific flow allowances for the following subdivisions:

1. Scrap drying wet air pollution control,
2. Scrap screening and milling,
3. Dross washing,
4. Demagging wet air pollution control,
5. Delacquering wet air pollution control,
6. Ingot conveyer casting,
7. Direct chill casting contact cooling,
8. Stationary casting contact cooling, and
9. Shot casting contact cooling.

OTHER FACTORS

The other factors considered in this evaluation were shown to be inappropriate bases for further segmentation. Air pollution control methods, treatment costs, nonwater quality aspects, and total energy requirements were each shown to be functions of the selected subcategorization factors -- metal product, raw materials, and production processes. As such, they support the method of subcategorization which has been applied. Certain other factors, such as plant age, plant size, and the number of employees, were also evaluated and determined to be inappropriate as bases for subcategorization of nonferrous metal plants.

PRODUCTION NORMALIZING PARAMETERS

The effluent limitations and standards developed in this document establish mass limitations on the discharge of specific pollutant parameters. To allow these regulations to be applied to plants with various production capacities, the mass of pollutant discharged must be related to a unit of production. This factor, the production normalizing parameter (PNP), is developed for each segment in conjunction with subcategorization.

In general, the amount of aluminum processed or produced by the respective manufacturing process segments is used as the PNP. The PNP's for the nine secondary aluminum segments are:

Segment	PNP
1. Scrap drying wet air pollution control	kkg of aluminum scrap dried
2. Scrap screening and milling	kkg of scrap screened or milled
3. Dross washing	kkg of dross washed
4. Demagging wet air pollution control	kkg of aluminum demagged
5. Delacquering wet air pollution control	kkg of aluminum delacquered
6. Ingot conveyer casting contact cooling	kkg of aluminum cast
7. Direct chill casting contact cooling	kkg of aluminum cast
8. Stationary casting contact cooling	kkg of aluminum cast
9. Shot casting contact cooling	kkg of aluminum cast

THIS PAGE INTENTIONALLY LEFT BLANK

SECTION V

WATER USE AND WASTEWATER CHARACTERISTICS

This section describes the characteristics of wastewater associated with the secondary aluminum subcategory. Data used to quantify wastewater flow and pollutant concentrations are presented, summarized, and discussed. The contribution of specific production processes to the overall wastewater discharge from secondary aluminum plants is identified whenever possible.

Two principal data sources were used in the development of the effluent limitations and standards for this subcategory; data collection portfolio (dcp) responses and field sampling results. Data collection portfolios, completed for each of the secondary aluminum plants, contained information regarding wastewater flows and production levels. An additional source of data used in this document is information and data gathered through comments and Section 308 requests (used to obtain supporting documentation for the comments). Additional data were gathered from six plants not considered at proposal.

Since gathering dcp information for this subcategory, the Agency has learned that 15 plants have closed. EPA believes that the data from these plants provide useful measures of the relationship between production and discharge. In light of this conclusion, the Agency is using these data in its consideration of BPT and BAT performance.

In order to quantify the pollutant discharge from secondary aluminum plants, a field sampling program was conducted. A complete list of the pollutants considered and a summary of the techniques used in sampling and laboratory analyses have been presented previously. samples were collected in two phases: screening and verification. The first phase, screen sampling, was to identify which toxic pollutants were present in the wastewaters from production of the various metals. Screening samples were analyzed for 128 of the 129 toxic pollutants and other pollutants deemed appropriate. (Because the analytical standard for TCDD was judged to be too hazardous to be made generally available, samples were never analyzed for this pollutant. There is no reason to expect that TCDD would be present in secondary aluminum wastewater.) A total of 10 plants were selected for screening sampling in the nonferrous metals manufacturing category, one of those being a secondary aluminum plant.

In general, the samples were analyzed for three classes of pollutants: toxic organic pollutants, toxic metal pollutants, and criteria pollutants (which includes conventional and nonconventional pollutants).

As described in Section IV of this supplement, secondary aluminum

plants have been categorized into nine segments. Differences in the wastewater characteristics associated with these building blocks are to be expected. For this reason, wastewater streams corresponding to each segment are addressed separately in the discussions that follow.

WASTEWATER SOURCES, DISCHARGE RATES, AND CHARACTERISTICS

The wastewater data presented in this section were evaluated in light of production process information compiled during this study. As a result, it was possible to identify the principal wastewater sources in the secondary aluminum subcategory. The result of this analysis is summarized in the following discussion.

Sources of process wastewater within the secondary aluminum subcategory include:

1. Scrap drying wet air pollution control,
2. Scrap screening and milling,
3. Dross washing,
4. Demagging wet air pollution control,
5. Delacquering wet air pollution control,
6. Ingot conveyer casting contact cooling,
7. Direct chill casting contact cooling water,
8. Stationary casting contact cooling, and
9. Shot casting contact cooling.

Data supplied by data collection portfolio responses were evaluated, and two flow-to-production ratios were calculated for each stream. The two ratios, water use and wastewater discharge flow, were differentiated by the flow value used in calculation. Water use was defined as the volume of water or other fluid (e.g., emulsions, lubricants) required for a given process per mass of aluminum product and was therefore based on the sum of recycle and make-up flows to a given process. Wastewater flow discharged after pretreatment or recycle (if these are used) was used in calculating the production normalized flow -- the volume of wastewater discharged from a given process to further treatment, disposal, or discharge per mass of aluminum produced. Differences between the water use and wastewater flows associated with a given stream resulted from recycle, evaporation, and carry-over on the product. The production values in calculations correspond to the production normalizing parameter, PNP, assigned to each stream, as outlined in Section IV. The production normalized flows were compiled by stream type. Where appropriate, an attempt was made to identify factors that could account for variations in water use. This information is summarized in this section. A similar analysis of factors affecting the wastewater values is presented in Sections X, XI, and XII, where representative BAT, BDT, and pretreatment discharge flows are selected for use in calculating the effluent limitations and standards. As an example, casting cooling water wastewater flow is related to the casting production. As such, the discharge rate is expressed in liters of cooling water per

metric ton of casting production (gallons of cooling water wastewater per ton of aluminum reduction production).

In order to quantify the concentrations of pollutants present in wastewater from secondary aluminum plants, wastewater samples were collected at five plants. Diagrams indicating the sampling sites and contributing production processes are shown in Figures V-1 to V-5 (pages 938 - 942)

The reported water use and discharge rates for the nine identified secondary aluminum wet operations are given in Tables V-1, 2, 3, 5, 7, 8, and 9 (pages 912 to 925). The raw wastewater sampling data for the facilities sampled are presented in Tables V-4, V-6, and V-10 (pages 915, 919, and 926). Table V-11 (page 927) shows combined raw wastewater data from demagging scrubbing and casting contact cooling.

The treated wastewater data are shown in Tables V-12 through V-15 (pages 929 through 936). The locations and stream codes of the samples taken are identified on the process flow diagrams in Figures V-1 through V-5 (pages 938 through 942). Where no data is listed for a specific day of sampling, the wastewater samples for the stream were not collected. If the analysis did not detect a pollutant in a waste stream, the pollutant was omitted from the table.

The data tables include some samples measured at concentrations considered not quantifiable. The base neutral extractable, acid extractable, and volatile organics are considered not quantifiable at concentrations equal to or less than 0.010 mg/l. Below this concentration, organic analytical results are not quantitatively accurate; however, the analyses are useful to indicate the possible presence of a particular pollutant. The pesticide fraction is considered not quantifiable at concentrations equal to or less than 0.005 mg/l. Nonquantifiable results are designated in the tables with an asterisk (double asterisk for pesticides).

These detection limits shown on the data tables are not the same as published detection limits for these pollutants by the same analytical methods. The detection limits used were reported with the analytical data and hence are the appropriate limits to apply to the data. Detection limit variation can occur as a result of a number of laboratory-specific, equipment-specific, and daily operator-specific factors. These factors can include day-to-day differences in machine calibration, variation in stock solutions, and variation in operators.

The statistical analysis of data includes some samples measured at concentrations considered not quantifiable. Data reported as an asterisk are considered as detected but below quantifiable concentrations, and a value of zero is used for averaging. Toxic organic, nonconventional and conventional pollutant data reported with a "less than" sign are considered as detected, but not further quantifiable. A value of zero is also used for

averaging. If a pollutant is reported as not detected, it is excluded in calculating the average. Finally, toxic metal values reported as less than a certain value were considered at not detected, and a value of zero is used in the calculation of the average. For example, three samples reported as ND, *, and 0.021 mg/l have an average value of 0.010 mg/l.

In the following discussion, water use and field sampling data are presented for each operation. Appropriate tubing or background blank and source water concentrations are presented with the summaries of the sampling data. Figures V-1 through V-5 (pages 938 through 942) show the location of wastewater sampling sites at each facility. The method by which each sample was collected is indicated by number, as follows:

1 one-time grab
2 24-hour manual composite
3 24-hour automatic composite
4 48-hour manual composite
5 48-hour automatic composite
6 72-hour manual composite
7 72-hour automatic composite

In the data collection portfolios, plants were asked to specify the presence or absence of any of the toxic pollutants in their effluent. All of the plants that responded to this portion of the questionnaire indicated that they believed the toxic organic pollutants to be absent. One exception, hexachloroethane, was reported believed to be present by two plants. This compound was not detected in any sample taken in the subcategory.

Although most of the plants indicated that the toxic metals were believed absent from their effluent, some plants did report that specific pollutants were known present or believed present. The responses for the toxic metals are shown in the tabulation below.

Pollutant	Known Present	Believed Present	Believed Absent	Known Absent
Antimony	-	-	23	-
Arsenic	-	1	22	-
Beryllium	1	-	22	-
Cadmium	5	1	17	-
Chromium	11	5	7	-
Copper	1	-	21	1
Lead	7	6	10	-
Mercury	2	2	18	1
Nickel	5	2	16	-
Selenium	-	-	22	1
Thallium	-	-	22	1
Zinc	9	6	8	-

SCRAP DRYING WET AIR POLLUTION CONTROL

Some scrap may require drying to remove cutting oils and water. The scrap drying procedure consists of crushing the scrap and heating in an oil or gas-fired rotary drier. Explosions are possible in the melting furnace if the scrap is not completely dried prior to charging. Twenty-nine secondary aluminum plants control air emissions from scrap drying operations. Three plants reported the use of scrubbers, while 26 used baghouses. Scrap drying wet air pollution control water use and discharge rates are shown in Table V-1 (page 912) in liters per metric ton (gal/ton) of aluminum scrap dried. Plants 427 and 4102 have either installed a dry system or discontinued the use of the scrubber, and plant 640 has ceased operations.

The Agency did not sample raw wastewater from scrap drying scrubbers, however, this wastewater should contain total suspended solids and treatable concentrations of aluminum. Toxic organic pollutants should not be present at measurable concentrations.

SCRAP SCREENING AND MILLING

Only two plants reported using water in scrap screening and milling. The discharge rates from these plants are presented in Table V-2 (page 913) in liters per metric ton of aluminum scrap screened or milled. The Agency did not sample scrap screening and milling wastewater but this waste stream should contain total suspended solids and treatable concentrations of aluminum, as well as toxic metals.

DROSS WASHING WASTEWATER

Sources of aluminum for the secondary aluminum subcategory are residues such as drosses, skimmings, and slags. These residues must be pretreated before charging them into the smelters. Both wet and dry processes are available for this pretreatment. Of the facilities surveyed, four used the wet process to prepare their residues for smelting. The quantities of water used and discharged, expressed as a function of dross processed, are presented in Table V-3 (page 914).

The data in Table V-4 (page 915) indicate that this wastewater contains treatable concentrations of suspended solids (aluminum oxide and hydrated alumina), ammonia, and metals such as aluminum, copper, and lead.

DEMAGGING WET AIR POLLUTION CONTROL

As discussed in Section III, demagging consists of injecting chlorine or aluminum fluoride into the molten aluminum to remove magnesium. During this process, heavy fuming can result. Of the 26 facilities supplying data, 17 reported using a wet process to control emissions from this process, while nine reported using a dry process. The flow rates used and discharged, expressed in

liters/metric ton of aluminum demagged, for those plants with wet air pollution control are shown in Table V-5 (page 918).

The wastewaters associated with this scrubbing operation may contain treatable concentrations of suspended solids and chlorides or fluorides, and of heavy metals. Table V-6 (page 919) summarizes the wastewater sampling data associated with demagging scrubber wastes.

DELACQUERING WET AIR POLLUTION CONTROL

Five plants reported using wet scrubbers to control air pollution from delacquering operations. Aluminum can scrap is charged to a furnace where paint and lacquers are burned from the metal surface. Aluminum fines emitted during shredding prior to delacquering may also be controlled by the delacquering scrubber. Delacquering wet air pollution control water use and discharge rates are shown in Table V-7 (page 923) in liters per metric ton (gal/ton) of aluminum delacquered.

Analytical data supplied to the Agency show treatable concentrations of total phenolics (0.346 mg/l to 26.8 mg/l), suspended solids (9 mg/l to 60.8 mg/l), and the presence of zinc, lead, and copper. Zinc was reported in treatable concentrations in three of five samples with one sample reported as 7.3 mg/l. GC/MS data supplied to the Agency show phenol, isophorone, naphthalene, and phenanthrene at 5.4, 0.045, 0.011, and 0.012 mg/l, respectively. The remaining toxic organics were all reported at less than 0.010 mg/l.

INGOT CONVEYER CASTING

The predominant method of casting in the secondary aluminum subcategory is ingot conveyer casting. There are 17 reported plants in the Agency's data base that use contact cooling water in ingot conveyer casting. There are additional plants that may use ingot conveyer casting; however, noncontact cooling water is used. Water use and discharge rates obtained from the dcp are presented in Table V-8. Three plants reported recycling cooling water, while 14 plants indicated they do not incorporate any recycle. One plant reported using ingot conveyer casting contact cooling water as demagging scrubber liquor makeup.

Table V-10 presents casting contact cooling water sampling data from a secondary aluminum plant utilizing ingot conveyer casting. Extensive sampling data of direct chill casting is presented in the aluminum forming point source category development document. These data, which are not expected to be significantly different than ingot conveyer casting, indicate suspended solids, oil and grease, and toxic metals may be present in both types of cooling waters.

DIRECT CHILL CASTING CONTACT COOLING WATER

The Agency is unaware of any secondary aluminum plants in the

United States using direct chill casting. There are, however, several plants that remelt aluminum scrap for forming operations that use direct chill casting. Casting of aluminum scrap for use in a forming plant is covered by the aluminum forming point source category. Water use and discharge rates for direct chill casting are presented in Section V of the primary aluminum subcategory supplement.

SHOT CASTING CONTACT COOLING WATER

Four secondary aluminum plants reported casting shot for subsequent use as a deoxidizer in the iron and steel industry. Water use and discharge rates for shot casting are presented in Table V-9. Temperature of the cooling water severely affects the quality of the aluminum shot. It is reported that the temperature of the quench bath must be maintained between 80F and 85F in the inlet and the outlet. Temperatures should not exceed 105F. Two plants used fresh make-up water to maintain the correct temperature. The other two plants, however, reported using cooling towers with no blowdown. Pollutant loadings of shot casting contact cooling water are expected to be very similar to ingot conveyer casting and direct chill casting, since all of these processes use water to cool and cast the molten metal. Oil and grease should not be present because mold lubrication is not required for shot casting.

STATIONARY CASTING COOLING

In the stationary casting method, molten aluminum is poured into cast iron molds and the generally allowed to air cool. The Agency is aware of the use of spray quenching to quickly cool the surface of the molten aluminum once it is cast into the molds; however, this water evaporates on contact with the molten aluminum. This operation is similar throughout the secondary aluminum and primary aluminum subcategories, and the aluminum forming category, and no discharge of process water has been reported.

TABLE V-1

WATER USE AND DISCHARGE RATES FOR
SCRAP DRYING WET AIR POLLUTION CONTROL

(l/kkg of aluminum scrap dried)

Plant Code	Percent Recycle	Production Normalized Water Use	Production Normalized Discharge Rate
00427	0	1057	1057
04102	100	5111	0
00640	100	567.6	0

TABLE V-2

WATER USE AND DISCHARGE RATES FOR
SCRAP SCREENING AND MILLING

(l/kkg of aluminum scrap dried)

Plant Code	Percent Recycle	Production Normalized Water Use	Production Normalized Discharge Rate
00296	100	13827	0
00301*	100	NR	0

* -- HEAVY MEDIA SEPARATION
NR -- DATA NOT REPORTED

TABLE V-3

WATER USE AND DISCHARGE RATES FOR DROSS WASHING

(l/kkg of dross washed)

Plant Code	Percent Recycle	Production Normalized Water Use	Production Normalized Discharge Rate
04104	67	32993	10868
04101	100	78840	0
04102	100	58408	0
04103	67*	NR	0

* -- Wastewater is all evaporated
NR -- Data not reported

Table V-4

SECONDARY ALUMINUM SAMPLING DATA
DROSS WASHING
RAW WASTEWATER

Pollutant (a)	Stream Code	Sample Type +	Source	Concentrations (mg/l, except as noted) Day 1	Day 2	Day 3	Average
Toxic Pollutants							
23. chloroform	70	2	0.022	0.061	0.057		0.059
30. 1,2-trans-dichloro-ethylene	70	2	ND	0.058	0.057		0.0575
39. fluoranthene	70	3	*	0.02			0.02
66. bis(2-ethylhexyl) phthalate	70	3	0.038	2.03			2.03
67. butyl benzyl phthalate	70	3	ND	0.098			0.098
68. di-n-butyl phthalate	70	3	*	0.022			0.022
69. di-n-octyl phthalate	70	3	0.011	0.036			0.036
71. dimethyl phthalate	70	3	ND	0.056			0.056
76. chrysene	70	3	*	0.198			0.198
87. trichloroethylene	70	2	0.022	<0.021	<0.015		<0.018
115. arsenic	70	3	<0.01	0.02			0.02
117. beryllium	70	3	<0.001	0.05			0.05

Table V-4 (Continued)

SECONDARY ALUMINUM SAMPLING DATA
DROSS WASHING
RAW WASTEWATER

Pollutant	Stream Code	Sample Type	+ Source	Concentrations (mg/l, except as noted) Day 1	Day 2	Day 3	Average
118. cadmium	70	3	0.02	0.40			0.4
119. chromium	70	3	0.009	2.0			2.0
120. copper	70	3	0.02	10.0			10.0
122. lead	70	3	<0.02	8.0			8.0
123. mercury	70	3	<0.0001	0.0006			0.0006
124. nickel	70	3	<0.005	1.0			1.0
126. silver	70	3	<0.02	0.07			0.07
127. thallium	70	3	<0.01	1.0			1.0
128. zinc	70	3	<0.06	8.0			8.0
Nonconventionals							
aluminum	70	3	0.05	2,000			2,000
ammonia	70	2		240	150		195.0
chemical oxygen demand (COD)	70	3		933			933
phenols (total; by 4-AAP method)	70	2		0.006	0.016		0.011
total organic carbon (TOC)	70	3		220			220.0

Table V-4 (Continued)

SECONDARY ALUMINUM SAMPLING DATA
DROSS WASHING
RAW WASTEWATER

Pollutant	Stream Code	Sample Type +	Concentrations (mg/l, except as noted) Source	Day 1	Day 2	Day 3	Average
Conventionals							
oil and grease	70	2		20.0	29.0		24.50
total suspended solids (TSS)	70	2	20,140				20,140
pH (standard units)	70	1			9.6		

(a) No samples were analyzed for the acid extractable toxic organic pollutants. One sample was analyzed for the pesticide fraction; none was detected above its analytical quantification limit. One sample was analyzed for PCBs; none was detected.

+Sample Type. Note: These numbers also apply to subsequent sampling data tables in this section.

1 - one-time grab
2 - 24-hour manual composite
3 - 24-hour automatic composite
4 - 48-hour manual composite
5 - 48-hour automatic composite
6 - 72-hour manual composite
7 - 72-hour automatic composite

* Indicates less than or equal to 0.01 mg/l
** Indicates less than or equal to 0.005 mg/l

TABLE V-5

WATER USE AND DISCHARGE RATES FOR
DEMAGGING WET AIR POLLUTION CONTROL

(l/kkg of aluminum demagged)

Plant Code	Percent Recycle	Production Normalized Water Use	Production Normalized Discharge Rate
296	100	43059	0
4104	0	6885	6885
332	0	1867	1867
532	100	1740	0
37	0	1289	1289
660	86.9	997	131
330	0	680	680
4209	0	596	596
320	NR	547	547
329	0	518	518
48	28.6	456	326
427	0	447	447
333	0	361	361
313	0	313	313
628	0	283	283
326	0	223	223
6202	100	132	0
313	0	NR	NR
319	NR	NR	NR
625	0	NR	NR

NR -- Data not reported

Table V-6

SECONDARY ALUMINUM SAMPLING DATA
DEMAGGING SCRUBBER LIQUOR
RAW WASTEWATER

Pollutant (a)	Stream Code	Sample Type	Source	Concentrations (mg/l, except as noted) Day 1	Day 2	Day 3	Average
Toxic Pollutants							
4. benzene	3	2		0.136	<0.013	<0.018	0.045
	68	2	0.017	*	*	*	*
23. chloroform	3	2		0.41	0.041	0.064	0.17
	68	2	0.022	0.019	0.071	0.019	0.36
29. 1,1-dichloro-ethylene	3	2		0.099	ND	ND	0.099
	68	2	ND	ND	ND	ND	
30. 1,2-trans-dichloro-ethylene	3	2		ND	ND	*	*
	68	2	ND	0.07	0.03	0.019	0.4
44. methylene chloride	3	2		0.37	ND	ND	0.37
	68	2	ND	ND	ND	ND	
48. dichlorobromo-methane	3	2		ND	ND	ND	
	68	2	ND	ND	0.019	ND	0.019
66. bis(2-ethylhexyl) phthalate	3	7		ND			
	68	7	0.038	0.228			0.228
85. tetrachloroethylene	3	2		0.378	ND	*	0.189
	68	2	ND	*	*	*	*
87. trichloroethylene	3	2		0.787	ND	<0.089	<0.39
	68	2	0.022	<0.03	<0.030	<0.031	<0.030

Table V-6 (Continued)

SECONDARY ALUMINUM SAMPLING DATA
DEMAGGING SCRUBBER LIQUOR
RAW WASTEWATER

	Pollutant (a)		Stream Code	Sample Type	Source	Concentrations (mg/l, except as noted) Day 1	Day 2	Day 3	Average
106.	PCB-1242	(b)	3	7		<0.020			<0.02
107.	PCB-1254	(b)	68	7	**	**			**
108.	PCB-1221	(b)							
109.	PCB-1232	(c)	3	7		<0.025			<0.025
110.	PCB-1248	(c)	68	7	**	**			**
111.	PCB-1260	(c)							
112.	PCB-1016	(c)							
113.	toxaphene		3	7		<0.011			<0.011
			68	7	ND	ND			
114.	antimony		3	7		0.3			0.3
			68	7	<0.1	<0.1			<0.1
115.	arsenic		3	7		4			4
			68	7	<0.01	<0.01			<0.01
117.	beryllium		68	7	<0.001	0.2			0.2
118.	cadmium		68	7	0.02	0.5			0.5
119.	chromium		68	7	0.009	<0.05			<0.05
120.	copper		68	7	0.02	0.2			0.2
121.	cyanide		3	7		<0.001	<0.001	<0.001	<0.001
			68	7			0.003		0.003

Table V-6 (Continued)

SECONDARY ALUMINUM SAMPLING DATA
DEMAGGING SCRUBBER LIQUOR
RAW WASTEWATER

Pollutant	Stream Code	Sample Type	Source	Concentrations (mg/l, except as noted) Day 1	Day 2	Day 3	Average
122. lead	68	7	<0.02	2			2
123. mercury	3	7		0.0064			0.0064
	68	7	<0.0001	0.001			0.001
124. nickel	68	7	<0.005	<0.05			<0.05
125. selenium	3	7		0.2			0.2
	68	7	<0.01	<0.01			<0.01
128. zinc	68	7	<0.06	3			3
Nonconventionals							
aluminum	3	2			ND	ND	
	68	2	0.05	500			500
ammonia	3	1		<0.1	<0.1	<0.1	<0.1
	68	2		0.84	0.42		0.63
chemical oxygen demand (COD)	3	2		48			48
	68	2		50			50
chloride	3	2		6,000			6,000
	68	2		3,241			3,241
phenols (total by 4-AAP method)	3	2		0.021	0.023	0.032	0.025
	68	2				0.007	0.007
total organic carbon (TOC)	3	2		3			3
	68	2		9			9

Table V-6 (Continued)

SECONDARY ALUMINUM SAMPLING DATA
DEMAGGING SCRUBBER LIQUOR
RAW WASTEWATER

Pollutant	Stream Code	Sample Type	Source	Concentrations (mg/l, except as noted) Day 1	Day 2	Day 3	Average
Conventionals							
oil and grease	3	2		121	16	157	98
	68	2				7	7
total suspended solids (TSS)	3	2		89			89
	68	2		2,082			2,082
pH (standard units)	3	1		2.8	3.6	2.5	
	68	1		6	6.4	6.1	

(a) One sample from one stream was analyzed for the acid extractable toxic organic pollutants; none was detected.

(b), (c) Reported together.

TABLE V-7

WATER USE AND DISCHARGE RATES FOR DELACQUERING WET AIR POLLUTION CONTROL

(l/kkg of aluminum scrap dried)

Plant Code	Percent Recycle	Production Normalized Water Use	Production Normalized Discharge Rate
340	0	296	296
342	NR	NR	NR
505	98	10010	167
313	97	8170	221
4101	98	25366	610

TABLE V-8

WATER USE AND DISCHARGE RATES FOR
SCRAP DRYING WET AIR POLLUTION CONTROL

(l/kkg of aluminum scrap dried)

Plant Code	Percent Recycle	Production Normalized Water Use	Production Normalized Discharge Rate
14	50	362	181
18	0	543	543
37	0	685	685
307	0	496	496
309	0	4347	4347
312	0	76	76
313	0	906	906
326	0	2824	2824
327	0	110	110
328	0	1139	1139
329	0	366	366
335	96	500	20
427	0	76	76
624	85	109	16
626	0	319	319
628	0	502	502
6202	0	227	227

TABLE V-9

WATER USE AND DISCHARGE RATES FOR
SCRAP DRYING WET AIR POLLUTION CONTROL

(l/kkg of aluminum scrap dried)

Plant Code	Percent Recycle	Production Normalized Water Use	Production Normalized Discharge Rate
51	100	NR	0
326	0	10578	10578
634	100	NR	0
4501	NR	175	NR

Table V-10

SECONDARY ALUMINUM SAMPLING DATA
INGOT CONVEYOR CASTING CONTACT COOLING WATER
RAW WASTEWATER

Pollutant (a)	Stream Code	Sample Type	Source	Concentrations (mg/l, except as noted) Day 1	Day 2	Day 3	Average
Toxic Pollutants							
23. chloroform	80	2	*	0.051			0.051
27. 1,4-dichlorobenzene	80	2	ND	0.026			0.026
66. bis(2-ethylhexyl) phthalate	80	2	*	0.075			0.075
67. butyl benzyl phthalate	80	2	*	0.014			0.014
68. di-n-butyl phthalate	80	2	*	0.045			0.045
77. acenaphthlyene	80	2	ND	0.017			0.017
84. pyrene	80	2	*	0.024			0.024
121. cyanide	80	2		0.005			0.005
Nonconventionals							
phenols (total; by 4-AAP method)	80	2		0.007			0.007
Conventionals							
oil and grease	80	2		16			16

(a) This sample was not analyzed for the acid extractable toxic pollutants. The pesticide fraction was analyzed for; none was detected above its analytical quantification limit. PCBs were analyzed for and detected below the quantification limit in one sample.

Table V-11

SECONDARY ALUMINUM SAMPLING DATA
DEMAGGING WET AIR POLLUTION CONTROL AND CASTING CONTACT COOLING
COMBINED RAW WASTEWATER

Pollutant (a)	Stream Code	Sample Type	Source	Concentrations (mg/l, except as noted) Day 1	Day 2	Day 3	Average
Toxic Pollutants							
23. chloroform	84	2	0.017	0.024	*	0.015	0.013
73. benzo(a)pyrene	84	3	ND		ND	0.012	0.012
117. beryllium	84	3			0.004	0.010	0.007
118. cadmium	84	3			0.02	0.05	0.035
120. copper	84	3			0.070	0.070	0.070
121. cyanide	84	3		0.003	0.002	0.007	0.004
122. lead	84	3			0.06	0.07	0.065
123. mercury	84	3			0.0002	0.0002	0.0002
128. zinc	84	3			2.0	2.0	2.0
Nonconventionals							
aluminum	84	3			70	90	80
chemical oxygen demand (COD)	84	3	<5		11	16	14
phenols (total; by 4-AAP method)	84	2		9.0	<0.001	<0.001	3.0

Table V-11 (Continued)

SECONDARY ALUMINUM SAMPLING DATA
DEMAGGING WET AIR POLLUTION CONTROL AND CASTING CONTACT COOLING
COMBINED RAW WASTEWATER

Pollutant	Stream Code	Sample Type	Source	Concentrations (mg/l, except as noted) Day 1	Day 2	Day 3	Average
total organic carbon (TOC)	84	3	5	6	9	7.5	
Conventionals							
Oil and grease	84	1		7	5	13	8.3
total suspended solids (TSS)	84	3	4	60	74	67	
pH (standard units)	84	1		6.8	6.6	6.5	

(a) No samples were analyzed for the acid extractable toxic organic pollutants. Two samples were analyzed for the pesticide fraction; none was reported present above its analytical quantification limit. PCBs were analyzed for and detected below the quantification limit in two samples.

Table V-12

SECONDARY ALUMINUM SAMPLING DATA
TREATMENT PLANT SAMPLES
PLANT A

Pollutant	Stream Code	Sample Type	Concentrations (mg/l, except as noted) Source	Day 1	Day 2	Day 3	Average
Toxic Pollutants							
23. chloroform	81	1	*	ND	*	0.025	0.125
47. bromoform	81	1	*	ND	0.011	*	0.0055
66. bis(2-ethylhexyl phthalate)	81	7	*	0.012			0.012
114. antimony	81	7	<0.1	1.1			1.1
115. arsenic	81	7	<0.01	0.07			0.07
121. cyanide	81	7		0.009	<0.001	<0.001	0.003
Nonconventionals							
chemical oxygen demand (COD)	81	7		1.4			1.4
phenols (total; by 4-AAP method)	81	1		0.008	0.007	0.004	0.006
total organic carbon (TOC)	81	7		6			6

Table V-12 (Continued)

SECONDARY ALUMINUM SAMPLING DATA
TREATMENT PLANT SAMPLES
PLANT A

Pollutant	Stream Code	Sample Type	Source	Concentrations (mg/l, except as noted) Day 1	Day 2	Day 3	Average
Conventionals							
oil and grease	81	1		3	28	ND	16
total suspended solids (TSS)	81	1		212			212
pH (standard units)	81	1		1.4	0.9	1.5	

Table V-13

SECONDARY ALUMINUM SAMPLING DATA
TREATMENT PLANT SAMPLES
PLANT B

	Pollutant	Stream Code	Sample Type	Concentrations (mg/l, except as noted) Source	Day 1	Day 2	Day 3	Average
Toxic Pollutants								
23.	chloroform	69	2	0.022	0.132	0.037		0.095
		133	1	0.022	ND			
30.	1,2-trans-dichloroethylene	69	2	ND	0.088	0.028		0.058
		133	1	ND	*			*
48.	dichlorobromomethane	69	2	ND	0.014	ND		0.014
		133	1	ND	ND			
66.	bis(2-ethylhexyl) phthalate	69	3	0.038	1.259			1.259
		133	1	0.038	0.036			0.036
68.	di-n-butyl phthalate	69	3	*	*			*
		133	1	*	0.012			0.012
115.	arsenic	69	3	<0.01	<0.01			<0.01
		133	1	<0.01	0.01			0.01
117.	beryllium	69	3	<0.001	0.02			0.02
		133	1	<0.001	0.05			0.05
118.	cadmium	69	3	0.02	<0.02			<0.02
		133	1	0.02	0.3			0.3
119.	chromium	69	3	0.009	<0.05			<0.05
		133	1	0.009	0.09			0.01

Table V-13 (Continued)

SECONDARY ALUMINUM SAMPLING DATA
TREATMENT PLANT SAMPLES
PLANT B

Pollutant	Stream Code	Sample Type	Concentrations (mg/l, except as noted) Source	Day 1	Day 2	Day 3	Average
120. copper	69	3	0.02	<0.06			<0.01
	133	1	0.02	2			0.01
121. cyanide	69	3			0.004		0.004
	133	1		0.002			0.002
122. lead	69	3	<0.02	<0.02			<0.02
	133	1	<0.02	2			2
123. mercury	69	3	<0.0001	0.0002			0.0002
	133	1	<0.0001	0.0006			0.0006
124. nickel	69	3	<0.005	<0.05			<0.05
	133	1	<0.005	0.2			0.2
128. zinc	69	3	<0.06	<0.06			<0.06
	133	1	<0.06	4			4
Nonconventionals							
aluminum	69	2	0.05	23.1			23.1
	133	1	0.05	200			200
ammonia	69	2		4.7	21		13

Table V-13 (Continued)

SECONDARY ALUMINUM SAMPLING DATA
TREATMENT PLANT SAMPLES
PLANT B

Pollutant	Stream Code	Sample Type	Source	Concentrations (mg/l, except as noted) Day 1	Day 2	Day 3	Average
chemical oxygen demand (COD)	69	2		54			54
	133	1		67			67
chloride	69	2		5500			5500
	133	1		3691			3691
total organic carbon (TOC)	69	2		9			9
	133	1		20			20
phenols (total; by 4-AAP method)	69	2			0.02		0.02
	133	1		0.006			0.006
Conventionals							
oil and grease	69	2			13		13
	133	1		11			11
total suspended solids (TSS)	69	2		240			240
	133	1		1132			1132
pH (standard units)	69	1		6	5.4		

Table V-14

SECONDARY ALUMINUM SAMPLING DATA
TREATMENT PLANT SAMPLES
PLANT D

Pollutant	Stream Code	Sample Type	Concentrations (mg/l, except as noted) Source	Day 1	Day 2	Day 3	Average
Toxic Pollutants							
23. chloroform	99	3	0.033	0.222	0.216	0.126	0.188
48. dichlorobromo-methane	99	3	ND	0.0255	0.018	0.018	0.021
51. chlorodibromo-methane	99	3	ND	<0.025	ND	0.029	0.0145
66. bis(2-ethylhexyl) phthalate	99	3	0.071	*	0.021	0.746	0.26
68. di-n-butyl phthalate	99	3	*	*	0.055	0.033	0.029
69. di-n-ocytl phthalate	99	3	ND	*	*	0.101	0.0337
118. cadmium	99	3	0.004	0.008	0.3	0.04	0.12
119. chromium	99	3	0.01	0.4	0.6	0.5	0.5
120. copper	99	3	<0.006	0.02	0.08	<0.06	0.033
121. cyanide	99	3		0.003	<0.001	<0.001	0.001
122. lead	99	3	<0.02	<0.02	0.9	0.3	0.4
123. mercury	99	3	<0.0001	0.004	0.0061	0.0042	0.0048

Table V-14 (Continued)

SECONDARY ALUMINUM SAMPLING DATA
TREATMENT PLANT SAMPLES
PLANT D

Pollutant	Stream Code	Sample Type	Concentrations (mg/l, except as noted) Source	Day 1	Day 2	Day 3	Average
124. nickel	99	3	<0.005	0.03	0.08	0.4	0.17
127. thallium	99	3	<0.1	<0.1	<0.1	0.1	0.033
128. zinc	99	3	<0.06	0.1	<0.6	<0.6	0.033
Nonconventionals							
aluminum	99	3	<0.05	2	3	1	2
chemical oxygen demand (COD)	99	3		10	6	<5	5
chloride	99	3		2510	2270	2170	2317
phenols (total; by 4-AAP method)	99	1		0.022	<0.001	<0.001	0.0073
total organic carbon (TOC)	99	3		6	6	6	6
Conventionals							
oil and grease	99	1		4	8	5	6
total suspended solids (TSS)	99	3		9	9	13	10

Table V-15

SECONDARY ALUMINUM SAMPLING DATA
TREATMENT PLANT SAMPLES
PLANT E

	Pollutant	Stream Code	Sample Type	Concentrations (mg/l, except as noted) Source	Day 1	Day 2	Day 3	Average
Toxic Pollutants								
4.	benzene	4	2		0.018	<0.018	<0.014	0.06
10.	1,2-dichloroethane	4	2		0.047	ND	0.124	0.086
11.	1,1,1-trichloro-ethane	4	2		ND	ND	0.016	0.016
15.	1,1,2,2-tetrachlo-roethane	4	2		ND	ND	<0.011	<0.011
23.	chloroform	4	2		0.386	0.056	0.085	0.18
29.	1,1-dichloro-ethylene	4	2		0.109	ND	ND	0.109
44.	methylene chloride	4	2		0.473	ND	ND	0.473
51.	chlorodibromometh-ane	4	2		ND	0.012	ND	0.012
85.	tetrachloroethylene	4	2		0.025	ND	<0.011	0.012
87.	trichloroethylene	4	2		0.098	<0.098	<0.074	0.033
114.	antimony	4	2		0.06			0.06

Table V-15 (Continued)

SECONDARY ALUMINUM SAMPLING DATA
TREATMENT PLANT SAMPLES
PLANT E

Pollutant	Stream Code	Sample Type	Source	Concentrations (mg/l, except as noted) Day 1	Day 2	Day 3	Average
121. cyanide	4	2		<0.001	<0.001	0.001	0.0003
123. mercury	4	2		0.0035			0.0035
125. selenium	4	2		0.02			0.02
Nonconventionals							
ammonia	4	2		<0.1	>0.1	<0.1	<0.1
chemical oxygen demand (COD)	4	2		40			40
chloride	4	2		4140			4140
phenols (total; by 4-AAP method)	4	2		0.012	0.005	0.017	0.011
total organic carbon (TOC)	4	2		122			122
Conventionals							
oil and grease	4	1		7	7	8	7
total suspended solids (TSS)	4	2		1950			1950
pH (standard units)	4	1		7.0	7.8	6.8	

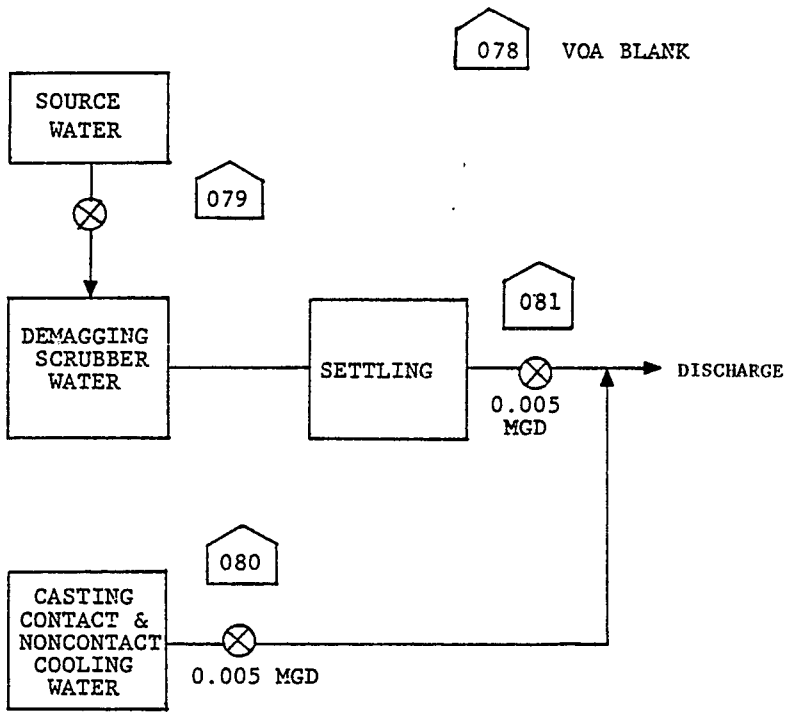

Figure V-1

SAMPLING SITES AT SECONDARY ALUMINUM PLANT A

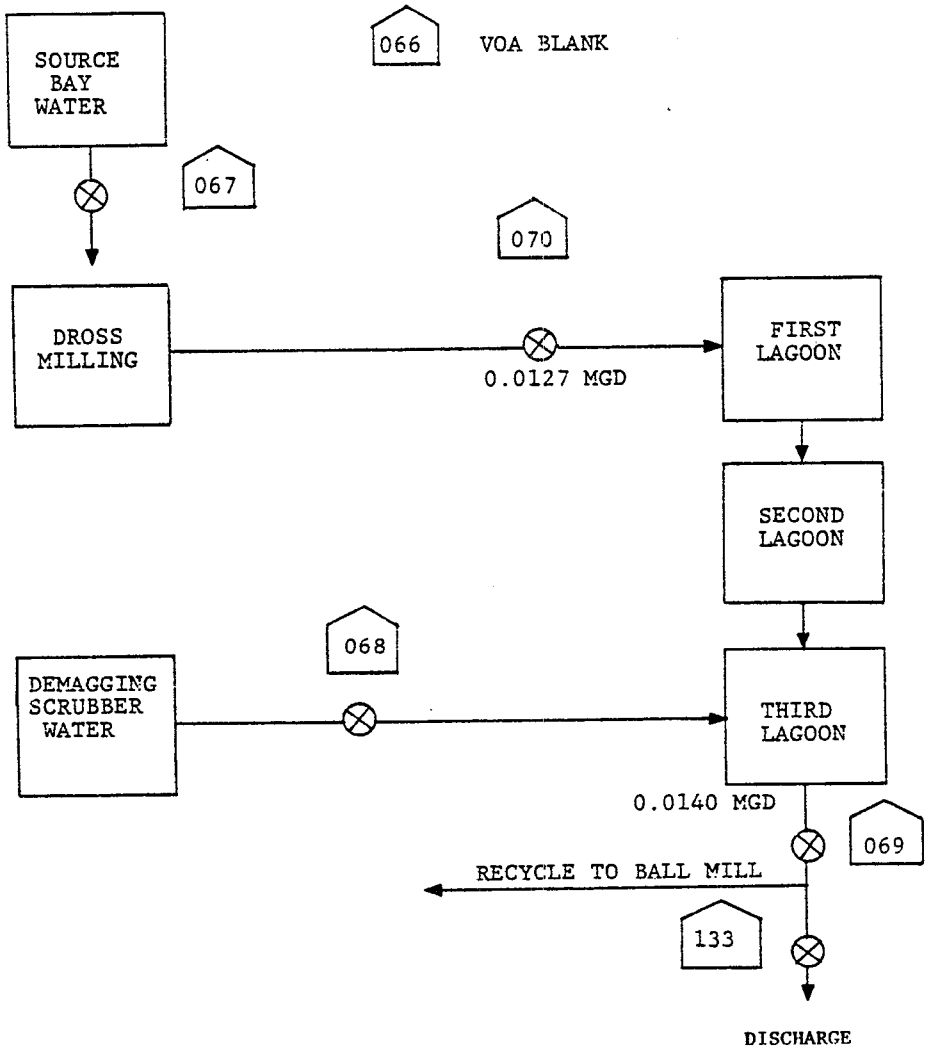

Figure V-2

SAMPLING SITES AT SECONDARY ALUMINUM PLANT B

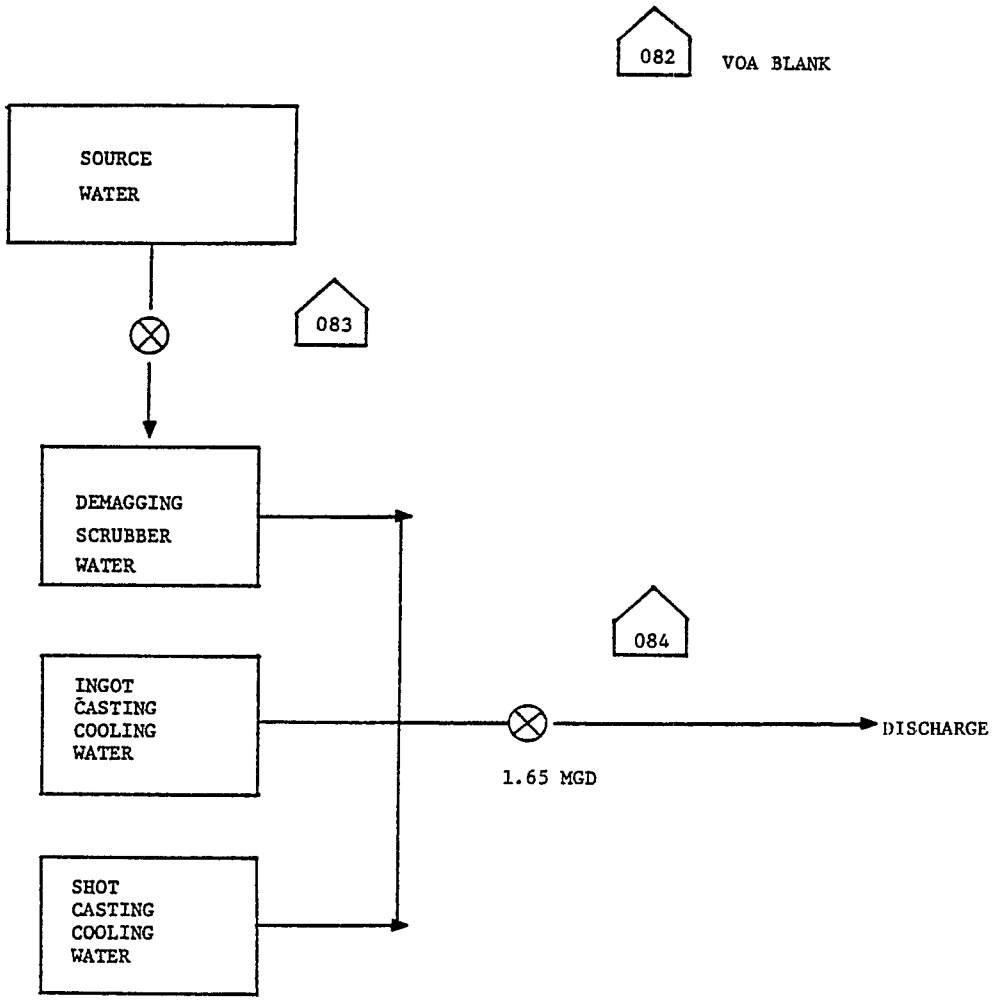

Figure V-3

SAMPLING SITES AT SECONDARY ALUMINUM PLANT C

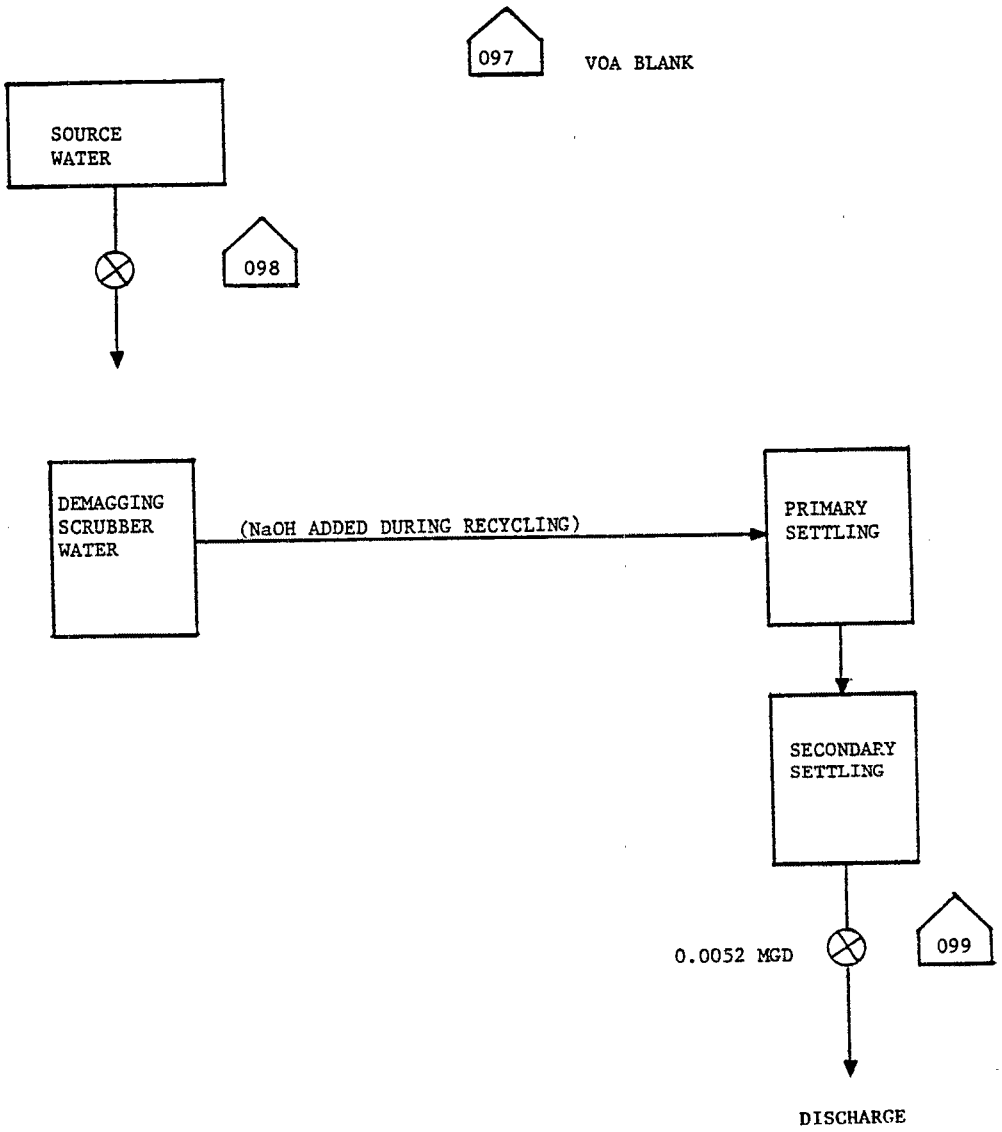

Figure V-4

SAMPLING SITES AT SECONDARY ALUMINUM PLANT D

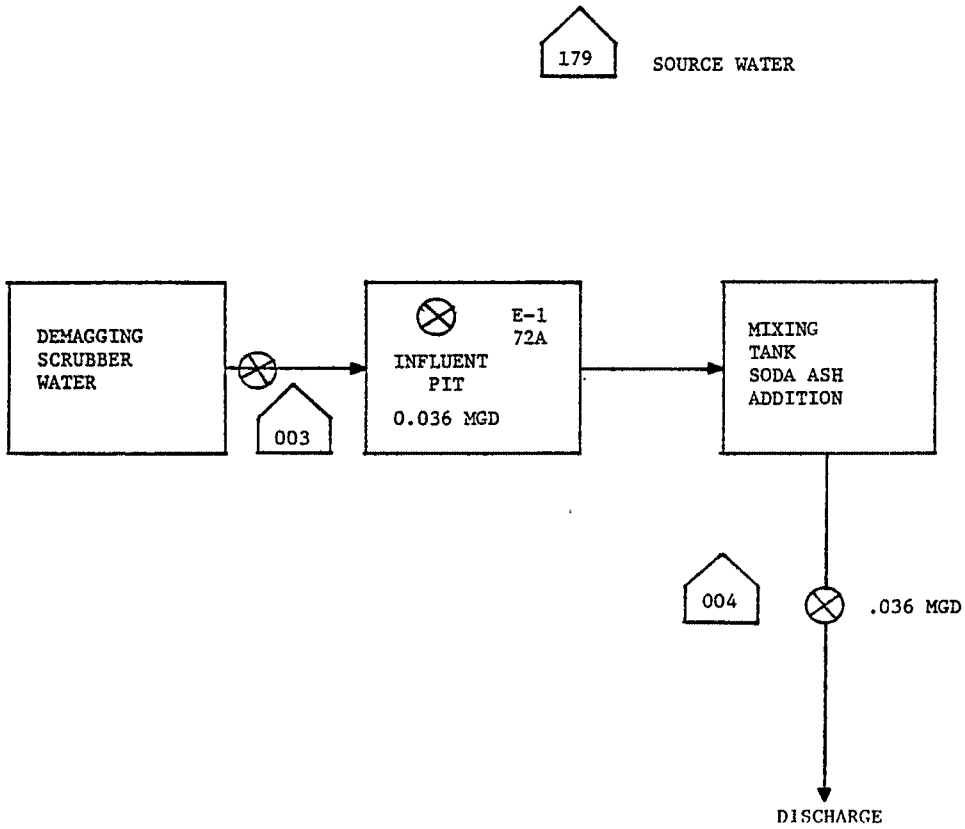

Figure V-5

SAMPLING SITES AT SECONDARY ALUMINUM PLANT E

SECTION VI

SELECTION OF POLLUTANTS

This section examines the chemical analysis data presented in section V and discusses the selection or exclusion of pollutants for potential limitation. The basis for the regulation of toxic and other pollutants is presented in Section VI of volume I of this document. Additionally, each pollutant selected for potential limitation is discussed there. That discussion provides information about where the pollutant originates (i.e., whether it is a naturally occurring substance, processed metal, or a manufactured compound); general physical properties and the form of the pollutant; toxic effects of the pollutant in humans and other animals; and behavior of the pollutant in POTW at the concentrations expected in industrial discharges. The discussion that follows describes the analysis that was performed to select or exclude pollutants for further consideration in the limitation for this subcategory.

The discussion that follows describes the analysis that was performed to select or exclude pollutants for further consideration for limitations and standards. Pollutants will be further considered if they are present in concentrations treatable by the technologies considered in this analysis. The treatable concentration used for the toxic metals were the long-term average performance values achievable by lime precipitation, sedimentation, and filtration. The treatable concentrations used for the toxic organics were the long-term performance values achievable by carbon adsorption.

After proposal, the Agency re-evaluated the treatment performance of activated carbon adsorption to control toxic organic pollutants. The treatment performance for the acid extractable, base-neutral extractable, and volatile organic pollutants has been set equal to the analytical quantification limit of 0.010 mg/l. The analytical quantification limit for pesticides and total phenols (by 4-AAP method) is 0.005 mg/l, which is below the 0.010 mg/l accepted for the other toxic organics. However, to be consistent, the treatment performance of 0.010 mg/l is used for pesticides and total phenols. The 0.010 mg/l concentration is achievable, assuming enough carbon is used in the column and a suitable contact time is allowed. The frequency of occurrence for 36 of the toxic pollutants has been redetermined based on the revised treatment performance value. No toxic organic pollutants have been selected for further consideration for limitation as a result of the revised treatment performance. However, sampling data for delacquering wet air pollution control submitted to the Agency through data collection requests have demonstrated the presence of 4-AAP phenols and phenol (pollutant number 65). As discussed below, these pollutants, which were not considered for limitation at proposal, have been selected for consideration for limitation.

CONVENTIONAL AND NONCONVENTIONAL POLLUTANT PARAMETERS

This study examined samples from the secondary aluminum subcategory for three conventional pollutant parameters (oil and grease, total suspended solids, and pH) and seven nonconventional pollutant parameters (ammonia, chemical oxygen demand, chloride, fluoride, aluminum, total organic carbon, and total phenols).

CONVENTIONAL AND NONCONVENTIONAL POLLUTANT PARAMETERS SELECTED

The conventional and nonconventional pollutants or pollutant parameters selected for consideration for limitation in this subcategory are:

aluminum
ammonia
total phenols (4-AAP)
total suspended solids (TSS)
oil and grease
pH

Aluminum was found above the 1.49 mg/l concentration attainable by identified treatment technology in four of six samples in three plants. Because it is the major product of plants in this subcategory and was found at treatable concentrations, aluminum is selected for consideration for limitation.

Ammonia was measured at three sites at two plants. The concentration of ammonia in these samples varied widely, depending on the stage and type of manufacturing process. Those plants that produce treatable concentrations of ammonia will be considered for limitation for that pollutant.

Total suspended solids ranged from 60 to 20,140 mg/l in six samples. All of the measured concentrations are well above the concentration achievable by identified treatment technology. Furthermore, most of the technologies used to remove toxic metals do so by converting these metals to precipitates, and these toxic-metal-containing precipitates should not be discharged. Meeting a limitation on total suspended solids also ensures that sedimentation to remove precipitated toxic metals has been effective. For these reasons, total suspended solids is considered for limitation in this subcategory.

Data solicited by the Agency through data collection requests have demonstrated the presence of 4-AAP phenols in delacquering scrubber liquor. Five sample analyses were submitted to EPA with phenolics concentrations ranging from 0.346 mg/l to 26.8 mg/l. Three concentrations were greater than 3 mg/l. The toxic pollutant phenol (number 65) was found at 5.4 mg/l in one sample. Based on this concentration and its frequency in delacquering wet air pollution control wastewater, total phenols (4-AAP) is selected for consideration for limitation.

Oil and grease was found above its treatable concentration (10 mg/l) in six of seven samples with concentrations ranging from 16 to 157 mg/l. Sampling data from direct chill casting raw wastewater taken at aluminum forming plants show oil and grease present at treatable concentrations in 15 of 23 samples. The treatable concentrations range from 15 to 226 mg/l. Therefore, oil and grease is selected for consideration for limitation.

The pH of a wastewater measures its relative acidity or alkalinity. In this study, the pH values observed in raw wastewater ranged from 2.8 to 9.6. Effective removal of toxic metals by precipitation requires careful control at pH. Therefore, pH is considered for limitation in this subcategory.

TOXIC POLLUTANTS

The frequency of occurrence of the toxic pollutants in the wastewater samples taken is presented in Table VI-1 (page 953). These data provide the basis for the categorization of specific pollutants, as discussed below. Table VI-1 is based on the raw wastewater data from streams 3, 68, 70, 80, and 84 (see Section V). Treatment plant sampling data were not considered in the frequency count.

TOXIC POLLUTANTS NEVER DETECTED

The toxic pollutants listed in Table VI-2 (page 957) were not detected in any wastewater samples from this subcategory; therefore, they were not selected for consideration in establishing limitations.

TOXIC POLLUTANTS NEVER FOUND ABOVE THEIR ANALYTICAL QUANTIFICATION LIMIT

The toxic pollutants listed below were never found above their analytical quantification level in any wastewater samples from this subcategory; therefore, they were not selected for consideration in establishing limitations.

91.	chlordane	
92.	4,4'-DDT	
93.	4,4'-DDE	
98.	endrin	
99.	endrin aldehyde	
100.	heptachlor	
101.	heptachlor epoxide	
102.	alpha-BHC	
103.	beta-BHC	
104.	gamma-BHC	
106.	PCB-1242	(a)
107.	PBC-1254	(a)
108.	PCB-1221	(a)
109.	PCB-1232	(b)
110.	PCB-1248	(b)
111.	PCB-1260	(b)

112. PCB-1016 (b)
113. toxaphene
121. cyanide

(a),(b) Reported together.

TOXIC POLLUTANTS PRESENT BELOW CONCENTRATIONS ACHIEVABLE BY TREATMENT

The pollutants listed below were not selected for consideration in establishing limitations because they were not found in any wastewater samples from this subcategory above concentrations considered achievable by existing or available treatment technologies. These pollutants are discussed individually following the list.

114. antimony
117. beryllium
123. mercury
125. selenium
126. silver

Antimony was found above its analytical quantification limit in one of six samples collected at four plants. The concentration found was 0.3 mg/l, which was below that achievable by identified technology. Therefore, antimony was not considered for limitation.

Beryllium was found above its analytical quantification limit in three of four samples. The maximum concentration measured was 0.20 mg/l. The concentration achievable by identified treatment technology are 0.20 mg/l. Therefore, beryllium was not considered for limitation.

Mercury was detected above its analytical quantification limit in all five samples of this subcategory, ranging from 0.0002 to 0.0064 mg/l. All of the values were below the 0.036 mg/l concentration achievable by identified treatment technology. Therefore, mercury was not considered for limitation.

Selenium was found above its quantification concentration in one of three samples collected at three plants. The concentration found was 0.20 mg/l, which was the concentration achievable by identified treatment technology. Therefore, selenium was not considered for limitation.

Silver was found above its analytical quantification limit in one of three samples with a value of 0.07 mg/l. This concentration was equal to that achievable by identified treatment technology. Therefore, silver are not considered for limitation.

TOXIC POLLUTANTS DETECTED IN A SMALL NUMBER OF SOURCES

The following pollutants were not selected for consideration for limitation on the basis they were detectable in the effluent from

only a small number of sources within the subcategory and it is uniquely related to only those sources.

4. benzene
23. chloroform
27. 1,4-dichlorobenzene
29. 1,1-dichloroethylene
30. 1,2-trans-dichloroethylene
39. fluoranthene
44. methylene chloride
48. dichlorobromomethane
66. bis(2-ethylhexyl) phthalate
67. butyl benzyl phthalate
68. di-n-butyl phthalate
69. di-n-octyl phthalate
71. dimethyl phthalate
73. benzo(a)pyrene
76. chrysene
77. acenaphthylene
84. pyrene
85. tetrachloroethylene
87. trichloroethylene
115. arsenic
119. chromium
120. copper
124. nickel
127. thallium

Although these pollutants were not selected for consideration in establishing nationwide limitations, it may be appropriate, on a case-by-case basis, for the permit writer to specify effluent limitations.

Benzene was found above its analytical quantification limit in one of 12 samples collected at four plants. The concentration of 0.136 mg/l was above the concentration achievable by identified treatment technology. Also, all secondary aluminum plants indicated in the dcp that this pollutant was known to be absent or believed to be absent from their wastewater. Because it was found above a treatable concentration at only one plant, benzene was not considered for limitation.

Chloroform, a common laboratory solvent, was found above its analytical quantification limit in 10 of 12 samples collected at four plants. The 10 samples ranged from values of 0.019 to 0.410 mg/l which were at concentrations above that achievable by treatment. All secondary aluminum plants indicated in the dcp that this pollutant was known to be absent or believed to be absent from their wastewater. Because the possibility of sample contamination is likely, chloroform was not considered for limitation.

1,4-Dichlorobenzene was found above its analytical quantification concentration in only one of six samples collected from three plants with a concentration of 0.026 mg/l, which was treatable by

identified technology. However, all secondary aluminum plants indicated in the dcp that this pollutant was known to be absent or believed to be absent from their wastewater. Since it was detected in only one plant, 1,4-dichlorobenzene was not considered for limitation.

1,1-Dichloroethylene was detected in only one of 12 samples collected at four plants. Its concentration was 0.099 mg/l, which was above the concentration achievable by available treatment (0.010 mg/l). Because it was found at only one plant, indicating the pollutant is site-specific, 1,1-dichloroethylene was not considered for limitation.

1,2-trans-Dichloroethylene was found above its treatable concentration (0.010 mg/l) in five of 12 samples. All five samples were taken at the same plant, including three from demagging scrubber wastewater. However, this pollutant was not detected in six samples from three other plants. Five of these six samples were taken from demagging scrubber wastewater or combined wastewater including demagging scrubber wastewater. Also, all secondary aluminum plants reporting in the dcp indicated that this pollutant was believed to be absent from their wastewater. Since this pollutant was found in treatable concentrations at only one plant, indicating it is site-specific, 1,2-trans-dichloroethylene was not considered for limitation.

Fluoranthene was detected above its analytical quantification limit in only one of six samples collected at three plants. The reported fluoranthene concentration, 0.020 mg/l, was above the concentration achievable by available treatment. However, all secondary aluminum plants indicated in the dcp that this pollutant was known to be absent or believed to be absent from their wastewater. Because it was found at only one plant, indicating the pollutant is site-specific, fluoranthene was not considered for limitation.

Methylene chloride was found above its analytical quantification limit in one of 12 samples. The measurable concentration was 0.370 mg/l. This pollutant was not attributable to specific materials or processes associated with the secondary aluminum subcategory; however, it is a common solvent used in analytical laboratories. Also, all secondary aluminum plants indicated in the dcp that this pollutant was known to be absent or believed to be absent from their wastewater. Since the possibility of sample contamination was likely, methylene chloride is not considered for limitation.

Dichlorobromomethane was detected in only one of 12 samples collected at four plants. Its concentration was 0.019 mg/l, which was above the concentration achievable by available treatment (0.010 mg/l). Because it was found at only one plant, indicating the pollutant was site-specific, dichlorobromomethane was not considered for limitation.

Bis(2-ethylhexyl) phthalate was found above its analytical

quantification limit in three of six samples. The concentrations measured were 0.075, 0.28, and 2.03 mg/l. The presence of this pollutant was not attributable to materials or processes associated with the secondary aluminum subcategory. It is commonly used as a plasticizer in laboratory and field sampling equipment. EPA suspects sample contamination as the source of this pollutant. Also, all secondary aluminum plants indicated in the dcp that this pollutant was known to be absent or believed to be absent from their wastewater. Therefore, bis(2-ethylhexyl) phthalate was not considered for limitation.

Butyl benzyl phthalate was found above its analytical quantification limit in two of six samples collected from three plants. The measured values were 0.014 and 0.098 mg/l. The presence of this pollutant was not attributable to materials or processes associated with the secondary aluminum subcategory. It is commonly used as a plasticizer in laboratory and field sampling equipment. EPA suspects sample contamination as the source of this pollutant. Also, all secondary aluminum plants indicated in the dcp that this pollutant was known to be absent or believed to be absent from their wastewater. For these reasons, butyl benzyl phthalate was not considered for limitation.

Di-n-butyl phthalate was found above its analytical quantification limit in two of six samples, with concentrations of 0.022 and 0.045 mg/l. The presence of this pollutant was not attributable to materials or processes associated with the secondary aluminum subcategory. It is commonly used as a plasticizer in laboratory and field sampling equipment. EPA suspects sample contamination as the source of this pollutant. Also, all secondary aluminum plants indicated in the dcp that this pollutant was known to be absent or believed to be absent from their wastewater. Therefore, di-n-butyl phthalate was not considered for limitation.

Di-n-octyl phthalate was found above its analytical quantification limit in only one of six samples collected at three plants, at a concentration of 0.036 mg/l. The presence of this pollutant was not attributable to materials or processes associated with the secondary aluminum subcategory. It is commonly used as a plasticizer in laboratory and field sampling equipment. EPA suspects sample contamination as the source of this pollutant. Also, all secondary aluminum plants indicated in the dcp that this pollutant was known to be absent or believed to be absent from their wastewater. For these reasons, di-n-octyl phthalate was not considered for limitation.

Dimethyl phthalate was detected at a concentration greater than its analytical quantification limit in only one of six samples collected at three plants. The measured concentration of this toxic pollutant was 0.056 mg/l. Also, all secondary aluminum plants indicated in the dcp that this pollutant was known to be absent or believed to be absent from their wastewater. Because it was found at just one plant, dimethyl phthalate was not

considered for limitation.

Benzo(a)pyrene was detected at a concentration above its analytical quantification limit in only one of six samples collected at three plants. The 0.012 mg/l concentration measured was above the concentration achievable by identified treatment technology. However, all secondary aluminum plants indicated in the dcp that this pollutant was known to be absent or believed to be absent from their wastewater. Because it was found at only one plant, benzo(a)pyrene was not considered for limitation.

Chrysene was detected at a concentration above its analytical quantification limit in only one of six samples collected at three plants. The 0.017 mg/l concentration measured was above the concentration achievable by identified treatment technology. However, all secondary aluminum plants indicated in the dcp that this pollutant was known to be absent or believed to be absent from their wastewater. Because it was found only at one plant, chrysene was not considered for limitation.

Acenaphthylene was detected at a concentration above its analytical quantification limit in only one of six samples collected at three plants. The 0.017 mg/l concentration measured was above the concentration achievable by identified treatment technology. Also, all secondary aluminum plants indicated in the dcp that this pollutant was known to be absent or believed to be absent from their wastewater. Because it was found at only one plant, acenaphthylene was not considered for limitation.

Pyrene was measured at a concentration greater than its analytical quantification limit in only one of six samples collected at three plants. The concentration of this toxic pollutant was 0.024 mg/l. Also, all secondary aluminum plants indicated in the dcp that this pollutant was known to be absent or believed to be absent from their wastewater. Because it was found at just one plant, pyrene was not considered for limitation.

Tetrachloroethylene was found above its analytical quantification limit and above the concentration attainable by available treatment in only one of 12 samples collected from four plants, indicating the pollutant was site-specific. The measured concentration was 0.378 mg/l. Also, all secondary aluminum plants indicated in the dcp that this pollutant was known to be absent or believed to be absent from their wastewater. Therefore, tetrachloroethylene was not considered for limitation.

Trichloroethylene was found above its analytical quantification limit and treatable concentration in one of 12 samples collected from four plants. The sample concentration was 0.787 mg/l. Also, all secondary aluminum plants indicated in the dcp that this pollutant was known to be absent or believed to be absent from their wastewater. Since this pollutant was found at only one plant, trichloroethylene was not considered for limitation.

Arsenic was found above its treatable concentration in one of three samples collected at four plants. The concentration of arsenic was 4.0 mg/l. Since it was found at a treatable concentration only one plant, arsenic was not considered for limitation.

Chromium was found above its treatable concentration in one of three samples collected at two plants. This sample contained 2.0 mg/l of chromium. Since a treatable concentration of chromium was collected at only one plant, chromium was not considered for limitation.

Copper was found above its treatable concentration in one of four samples, with a value of 10.0 mg/l. Since copper was found at only one plant, it was considered specific to that site and was not considered for limitation.

Nickel was detected above its treatable concentration in one of three samples (1.0 mg/l). Since it was found in only one plant, nickel was not considered for limitation.

Thallium was detected above its treatable concentration in one of three samples collected at three plants. Because it was found at only one plant, thallium was not considered for limitation.

TOXIC POLLUTANTS SELECTED FOR CONSIDERATION FOR ESTABLISHING LIMITATIONS

The pollutants listed below were selected for further consideration in establishing limitations and standards for this subcategory. The toxic pollutants selected are each discussed following the list.

65. phenol
118. cadmium
122. lead
128. zinc

Phenol was detected in one of three samples above treatable concentrations. Delacquering wet air pollution control wastewater, based on data from one sample submitted to the Agency, contains phenol. Also, the data show that delacquering wet air pollution control wastewater contains total phenolics in concentrations up to 26.8 mg/l. In five analyses submitted to the Agency, total phenolics was above treatable concentrations in all five samples. Therefore, phenol was selected for consideration for limitation.

Cadmium was detected above its analytical quantification limit in four samples collected at two plants. The values ranged from 0.020 to 0.500 mg/l. Three of the concentrations were above the concentration of 0.049 mg/l, which is achievable by the identified treatment technology. Data supplied to EPA by an industry representative showed cadmium at 0.64 mg/l in one sample from delacquering wet air pollution control. Therefore, cadmium

was selected for consideration for limitation.

Lead was detected present above its analytical quantification limit in all four samples collected at two plants. The reported lead concentrations ranged from 0.060 to 8.0 mg/l. A lead concentration of 0.08 mg/l is achievable by identified treatment technology. Data supplied to EPA by industry representatives showed lead above treatable concentrations in two of five samples (0.1 and 2.1 mg/l) for delacquering wet air pollution control. Therefore, lead was selected for consideration for limitation.

Zinc was detected above its analytical quantification limit in all four samples collected at two plants. The concentrations of zinc reported ranged from 2.0 to 8.0 mg/l. The concentration of zinc achievable by identified treatment technology is 0.23 mg/l. Data supplied to EPA by industry representatives showed zinc above treatable concentrations in three of five samples (0.824, 0.898, and 7.3 mg/l) for delacquering wet air pollution control. Therefore, zinc was selected for consideration for limitation.

Table VI-1

FREQUENCY OF OCCURRENCE OF TOXIC POLLUTANTS
SECONDARY ALUMINUM
RAW WASTEWATER

Pollutant	Analytical Quantification Concentration (mg/l)(a)	Treatable Concentration (mg/l)(b)	Number of Streams Analyzed	Number of Samples Analyzed	ND	Detected Below Quantification Concentration	Detected Below Treatable Concentration	Detected Above Treatable Concentration
1. acenaphthene	0.010	0.010	5	6	6			
2. acrolein	0.010	0.010	5	12	12			
3. acrylonitrile	0.010	0.010	5	12	12			
4. benzene	0.010	0.010	5	12	6	5		1
5. benzidine	0.010	0.010	5	6	6			
6. carbon tetrachloride	0.010	0.010	5	12	12			
7. chlorobenzene	0.010	0.010	5	12	12			
8. 1,2,4-trichlorobenzene	0.010	0.010	5	6	6			
9. hexachlorobenzene	0.010	0.010	5	6	6			
10. 1,2-dichloroethane	0.010	0.010	5	12	12			
11. 1,1,1-trichloroethane	0.010	0.010	5	12	12			
12. hexachloroethane	0.010	0.010	5	6	6			
13. 1,1-dichloroethane	0.010	0.010	5	12	12			
14. 1,1,2-trichloroethane	0.010	0.010	5	12	12			
15. 1,1,2,2-tetrachloroethane	0.010	0.010	5	12	12			
16. chloroethane	0.010	0.010	5	12	12			
17. bis(chloromethyl) ether	0.010	0.010	5	12	12			
18. bis(2-chloroethyl) ether	0.010	0.010	5	6	6			
19. 2-chloroethyl vinyl ether	0.010	0.010	5	12	12			
20. 2-chloronaphthalene	0.010	0.010	5	6	6			
21. 2,4,6-trichlorophenol	0.010	0.010	2	2	2			
22. parachlorometa cresol	0.010	0.010	2	2	2			
23. chloroform	0.010	0.010	5	12		1		11
24. 2-chlorophenol	0.010	0.010	2	2	2			
25. 1,2-dichlorobenzene	0.010	0.010	5	6	6			
26. 1,3-dichlorobenzene	0.010	0.010	5	6	6			
27. 1,4-dichlorobenzene	0.010	0.010	5	6	5			1
28. 3,3'-dichlorobenzidine	0.010	0.010	5	6	6			
29. 1,1-dichloroethylene	0.010	0.010	5	12	11			1
30. 1,2-trans-dichloroethylene	0.010	0.010	5	12	6	1		5
31. 2,4-dichlorophenol	0.010	0.010	2	2	2			
32. 1,2-dichloropropane	0.010	0.010	5	12	12			
33. 1,3-dichloropropylene	0.010	0.010	5	12	12			
34. 2,4-dimethylphenol	0.010	0.010	2	2	2			
35. 2,4-dinitrotoluene	0.010	0.010	5	6	6			
36. 2,6-dinitrotoluene	0.010	0.010	5	6	6			
37. 1,2-diphenylhydrazine	0.010	0.010	5	6	6			

Table VI-1 (Continued)

FREQUENCY OF OCCURRENCE OF TOXIC POLLUTANTS
SECONDARY ALUMINUM
RAW WASTEWATER

Pollutant	Analytical Quantification Concentration (mg/l)(a)	Treatable Concentration (mg/l)(b)	Number of Streams Analyzed	Number of Samples Analyzed	ND	Detected Below Quantification Concentration	Detected Below Treatable Concentration	Detected Above Treatable Concentration
38. ethylbenzene	0.010	0.010	5	12	12			
39. fluoranthene	0.010	0.010	5	6	5			1
40. 4-chlorophenyl phenyl ether	0.010	0.010	5	6	6			
41. 4-bromophenyl phenyl ether	0.010	0.010	5	6	6			
42. bis(2-chloroisopropyl) ether	0.010	0.010	5	6	6			
43. bis(2-chloroethoxy) methane	0.010	0.010	5	6	6			
44. methylene chloride	0.010	0.010	5	12	11			1
45. methyl chloride	0.010	0.010	5	12	12			
46. methyl bromide	0.010	0.010	5	12	12			
47. bromoform	0.010	0.010	5	12	12			
48. dichlorobromomethane	0.010	0.010	5	12	11			1
49. trichlorofluoromethane	0.010	0.010	5	12	12			
50. dichlorodifluoromethane	0.010	0.010	5	12	12			
51. chlorodibromomethane	0.010	0.010	5	12	12			
52. hexachlorobutadiene	0.010	0.010	5	6	6			
53. hexachlorocyclopentadiene	0.010	0.010	5	6	6			
54. isophorone	0.010	0.010	5	6	6			
55. naphthalene	0.010	0.010	5	6	6			
56. nitrobenzene	0.010	0.010	5	6	6			
57. 2-nitrophenol	0.010	0.010	2	2	2			
58. 4-nitrophenol	0.010	0.010	2	2	2			
59. 2,4-dinitrophenol	0.010	0.010	2	2	2			
60. 4,6-dinitro-o-cresol	0.010	0.010	2	2	2			
61. N-nitrosodimethylamine	0.010	0.010	5	6	6			
62. N-nitrosodiphenylamine	0.010	0.010	5	6	6			
63. N-nitrosodi-n-propylamine	0.010	0.010	5	6	6			
64. pentachlorophenol	0.010	0.010	2	2	2			
65. phenol	0.010	0.010	2	2	2			
66. bis(2-ethylhexyl) phthalate	0.010	0.010	5	6	3			3
67. butyl benzyl phthalate	0.010	0.010	5	6	4			2
68. di-n-butyl phthalate	0.010	0.010	5	6	4			2
69. di-n-octyl phthalate	0.010	0.010	5	6	5			1
70. diethyl phthalate	0.010	0.010	5	6	6			
71. dimethyl phthalate	0.010	0.010	5	6	5			1
72. benzo(a)anthracene	0.010	0.010	5	6	6			
73. benzo(a)pyrene	0.010	0.010	5	6	5			1
74. 3,4-benzofluoranthene	0.010	0.010	5	6	6			

Table VI-1 (Continued)

FREQUENCY OF OCCURRENCE OF TOXIC POLLUTANTS
SECONDARY ALUMINUM
RAW WASTEWATER

Pollutant	Analytical Quantification Concentration (mg/l)(a)	Treatable Concentration (mg/l)(b)	Number of Streams Analyzed	Number of Samples Analyzed	ND	Detected Below Quantification Concentration	Detected Below Treatable Concentration	Detected Above Treatable Concentration
75. benzo(k)fluoranthene	0.010	0.010	5	6	6			
76. chrysene	0.010	0.010	5	6	5			1
77. acenaphthylene	0.010	0.010	5	6	5			1
78. anthracene (c)	0.010	0.010	5	6	6			
79. benzo(ghi)perylene	0.010	0.010	5	6	6			
80. fluorene	0.010	0.010	5	6	6			
81. phenanthrene (c)	0.010	0.010	5	6	6			
82. dibenzo(a,h)anthracene	0.010	0.010	5	6	6			
83. indeno(1,2,3-cd)pyrene	0.010	0.010	5	6	6			
84. pyrene	0.010	0.010	5	6	5			1
85. tetrachloroethylene	0.010	0.010	5	12	7	4		1
86. toluene	0.010	0.010	5	12	12			
87. trichloroethylene	0.010	0.010	5	12	5	6		1
88. vinyl chloride	0.010	0.010	5	12	12			
89. aldrin	0.005	0.010	5	6	6			
90. dieldrin	0.005	0.010	5	6	6			
91. chlordane	0.005	0.010	5	6	2	4		
92. 4,4'-DDT	0.005	0.010	5	6	2	4		
93. 4,4'-DDE	0.005	0.010	5	6	3	3		
94. 4,4'-DDD	0.005	0.010	5	6	6			
95. alpha-endosulfan	0.005	0.010	5	6	6			
96. beta-endosulfan	0.005	0.010	5	6	6			
97. endosulfan sulfate	0.005	0.010	5	6	6			
98. endrin	0.005	0.010	5	6	5	1		
99. endrin aldehyde	0.005	0.010	5	6	4	2		
100. heptachlor	0.005	0.010	5	6	2	4		
101. heptachlor epoxide	0.005	0.010	5	6	4	2		
102. alpha-BHC	0.005	0.010	5	6	4	2		
103. beta-BHC	0.005	0.010	5	6	2	4		
104. gamma-BHC	0.005	0.010	5	6	3	3		
105. delta-BHC	0.005	0.010	5	6	6			
106. PCB-1242 (d)	0.005	0.010	5	6	1	5		
107. PCB-1254 (d)	0.005							
108. PCB-1221 (d)	0.005							
109. PCB-1232 (e)	0.005	0.010	5	6	1	5		
110. PCB-1248 (e)	0.005							
111. PCB-1260 (e)	0.005							
112. PCB-1016 (e)	0.005							

Table VI-1 (Continued)

FREQUENCY OF OCCURRENCE OF TOXIC POLLUTANTS
SECONDARY ALUMINUM
RAW WASTEWATER

Pollutant	Analytical Quantification Concentration (mg/l)(a)	Treatable Concentration (mg/l)(b)	Number of Streams Analyzed	Number of Samples Analyzed	ND	Detected Below Quantification Concentration	Detected Below Treatable Concentration	Detected Above Treatable Concentration
113. toxaphene	0.005	0.010	5	6	5	1		
114. antimony	0.100	0.47	3	3	2		1	
115. arsenic	0.010	0.34	3	3	1	1		1
116. asbestos	10 MFL	10 MFL	1	1	1			
117. beryllium	0.010	0.20	3	4		1	3	
118. cadmium	0.002	0.049	3	4			1	3
119. chromium	0.005	0.07	3	4		3		1
120. copper	0.009	0.39	3	4			3	1
121. cyanide (f)	0.02	0.047	5	10		9	1	
122. lead	0.020	0.08	3	4			2	2
123. mercury	0.0001	0.036	4	5			5	
124. nickel	0.005	0.22	3	3		2		1
125. selenium	0.01	0.20	3	3	2		1	
126. silver	0.02	0.07	3	3	2		1	
127. thallium	0.100	0.34	3	3	2			1
128. zinc	0.050	0.23	3	4				4
129. 2,3,7,8-tetrachlorodibenzo-p-dioxin (TCDD)	Not Analyzed							

(a) Analytical quantification concentration was reported with the data (see Section V).

(b) Treatable concentrations are based on performance of lime precipitation, sedimentation, and filtration for toxic metal pollutants and activated carbon adsorption for toxic organic pollutants.

(c),(d),(e) Reported together.

(f) Analytical quantification concentration for EPA Method 335.2, Total Cyanide Methods for Chemical Analysis of Water and Wastes, EPA-600/4-79-020, March 1979.

TABLE VI-2

TOXIC POLLUTANTS NEVER DETECTED

1. acenaphthene
2. acrolein
3. acrylonitrile
5. benzidine
6. carbon tetrachloride
7. chlorobenzene
8. 1,2,4-trichlorobenzene
9. hexachlorobenzene
10. 1,2-dichloroethane
11. 1,1,1-trichloroethane
12. hexachloroethane
13. 1,1-dichloroethane
14. 1,1,2-trichloroethane
15. 1,1,2,2-tetrachloroethane
16. chloroethane
17. DELETED
18. bis(2-chloroethyl) ether
19. 2-chloroethyl vinyl ether
20. 2-chloronaphthalene
21. 2,4,6-trichlorophenol
22. parachlorometa cresol
24. 2-chlorophenol
25. 1,2-dichlorobenzene
26. 1,3-dichlorobenzene
28. 3,3'-dichlorobenzidine
31. 2,4-dichlorophenol
32. 1,2-dichloropropane
33. 1,3-dichloropropylene
34. 2,4-dimethylphenol
35. 2,4-dinitrotoluene
36. 2,6-dinitrotoluene
37. 1,2-diphenylhydrazine
38. ethylbenzene
40. 4-chlorophenyl phenyl ether
41. 4-bromophenyl phenyl ether
42. bis(2-chloroisopropyl) ether
43. bis(2-chloroethoxy) methane
45. methyl chloride
46. methyl bromide
47. bromoform
49. DELETED
50. DELETED
51. chlorodibromomethane
52. hexachlorobutadiene
53. hexachlorocyclopentadiene
54. isophorone
55. naphthalene
56. nitrobenzene
57. 2-nitrophenol

TABLE VI-2 (Continued)

TOXIC POLLUTANTS NEVER DETECTED

58. 4-nitrophenol
59. 2,4-dinitrophenol
60. 4,6-dinitro-o-cresol
61. N-nitrosodimethylamine
62. N-nitrosodiphenylamine
63. N-nitrosodi-n-propylamine
64. pentachlorophenol
70. diethyl phthalate
72. benzo(a)anthracene
74. 3,4-benzofluoranthene
75. benzo(k)fluoranthene
78. anthracene (a)
79. benzo(ghi)perylene
80. fluorene
81. phenanthrene (a)
82. dibenzo(a,h)anthracene
83. indeno (1,2,3-cd)pyrene
86. toluene
88. vinyl chloride
89. aldrin
90. dieldrin
94. 4,4'-DDD
95. alpha-endosulfan
96. beta-endosulfan
97. endosulfan sulfate
105. delta-BHC
116. asbestos
129. 2,3,7,8-tetrachlorodibenzo-p-dioxin (TCDD)

(a) Reported together

SECTION VII

CONTROL AND TREATMENT TECHNOLOGIES

The preceding sections of this supplement discussed the wastewater sources, flows, and characteristics of the wastewaters from secondary aluminum plants. This section summarizes the description of these wastewaters and indicates the level of treatment which is currently practiced by in secondary aluminum subcategory for each waste stream. Since gathering data through data collection portfolios, the Agency has learned that 15 plants have closed. Treatment methods used by these plants are still presented in this section because they play an integral part in BAT technology selection.

This section presents a summary of the control and treatment technologies that are currently being applied to each of the sources generating wastewater in this subcategory. As discussed in Section V, wastewater associated with the secondary aluminum subcategory is characterized by the presence of the toxic metal pollutants and suspended solids. The raw (untreated) wastewater data are presented for specific sources as well as combined waste streams in Section V. Generally, these pollutants are present in each of the waste streams at treatable concentrations, so these waste streams are commonly combined for treatment to reduce the concentrations of these pollutants. Construction of one wastewater treatment system for combined treatment allows plants to take advantage of economies of scale and, in some instances, to combine streams of differing alkalinity to reduce treatment chemical requirements. Three plants in this subcategory currently have combined wastewater treatment systems, one has lime precipitation and sedimentation, and no plants have lime precipitation, sedimentation and filtration. As such, two options have been selected for consideration for BAT, BDT, and pretreatment in this subcategory, based on combined treatment of these compatible waste streams.

TECHNICAL BASIS OF EXISTING REGULATIONS

As mentioned in Section III, EPA promulgated BPT effluent limitations guidelines for the secondary aluminum smelting subcategory on April 8, 1974. In order to put the treatment practices currently in place and the technologies selected for BAT options into the proper perspective, it is necessary to describe the technologies selected by EPA for BPT, BAT, and pretreatment standards. The BPT regulations established by EPA limited the discharge of aluminum, copper, ammonia, chemical oxygen demand, fluoride, and total suspended solids and required the control of pH (refer to Section IX). The BAT regulation required zero discharge based on in-process changes which eliminated the need for demagging wet air pollution control and dross washing. Zero discharge of metal cooling water was based on 100 percent recycle. Pretreatment for existing sources

required oil skimming, pH adjustment, and ammonia air stripping.

SCRAP DRYING WET AIR POLLUTION CONTROL

Wet and dry control devices are used to control air emissions from scrap drying operations. Three plants use scrubbers; 26 plants use baghouses. Two plants practice 100 percent recycle, resulting in zero discharge. One plant discharges this wastewater, which may contain suspended solids and aluminum.

Alkali addition and sedimentation can be used to remove suspended solids and some metals. The one plant producing this wastewater reported no treatment before discharging to a municipal sewer system.

SCRAP SCREENING AND MILLING WASTEWATER

Two plants operate scrap screening and milling operations. Both plants practice 100 percent reycle of this wastewater, which may contain total suspended solids, toxic metals, and aluminum at treatable concentrations. Alkali addition and sedimentation may be used to reduce suspended solids and some metals.

DROSS WASHING WASTEWATER

Of the four plants that practice wet dross processing, two practice 100 percent recycle and one attains zero discharge by solar evaporation. Two plants recycle 67 percent of this wastewater, which contains toxic metals, aluminum, ammonia, and suspended solids.

The only currently practiced reduction of primary aluminum residues and secondary aluminum slags uses wet milling with a countercurrent flow process to reduce or possibly eliminate salt impregnation of runoff and ground water from discarded solid waste. Such salt recovery installations are operating in England and Switzerland, and the salts recovered assist in paying for the operation since they are reusable as fluxing salts in the secondary aluminum subcategory. By using a countercurrent milling and washing approach, two advantages are realized. The final recovered metal is washed with clean water, providing a low-salt feed to the melting furnaces. The wastewater, with the insolubles removed, would be of a concentration suitable for economical salt recovery by evaporation and crystallization. Heat for evaporation could be supplied by the waste heat from the furnaces. The process would have to contend with the ultimate disposal of dirt, trace metals, and insoluble salts not removed from the dross during milling. Sedimentation with recycle is the treatment method currently used at the one discharging facility.

DEMAGGING WET AIR POLLUTION CONTROL

During the smelting process it is often necessary to remove magnesium from the molten aluminum. This process of demagging can be performed with chlorine or aluminum fluoride. Most

facilities (25 of the 37 that demag) use chlorine to accomplish the demagging. Aluminum fluoride is more expensive than chlorine and is not regarded as effective in removing magnesium. In addition, the furnace refractory lining life is shorter when aluminum fluoride is used since residues resulting from its use in the demagging process are more corrosive than chlorine generated residues.

However, demagging with chlorine complicates emissions control because of the formation of hydrochloric acid in the smelting emissions, due to the hydrolysis of aluminum and magnesium chloride when wet scrubbing is used. Emissions from aluminum fluoride demagging are usually controlled with dry processes.

Demagging scrubbing wastewater contains toxic metals, aluminum, total suspended solids, and oil and grease.

Of the 58 facilities surveyed, 20 use some form of wet process control of demagging air emissions. Four of the 20 practice 100 percent recycle. Four of the facilities discharge (either directly or to a POTW) with no prior treatment, and one facility only settles the waste stream before discharging it. The six facilities that treat this waste stream all neutralize the stream (often with soda ash) before discharge. This neutralization step is usually followed by a settling procedure since pH adjustment to 5.0 to 7.0 will precipitate most of the aluminum and magnesium.

DELACQUERING WET AIR POLLUTION CONTROL

Wet scrubbers are used to control air pollution from delacquering operations at five plants. Two plants report using sedimentation, one plant neutralizes with caustic, and one plant uses lime and settle treatment. The fifth plant did not report its treatment method. Three plants reported recycle rates of 97 percent and above.

Analytical data submitted to the Agency show delacquering wet air pollution control wastewater to contain total phenolics and treatable concentrations of zinc. The pH of the scrubber liquor is approximately 6.5 and TSS concentrations are typically below 70 mg/l.

INGOT CONVEYER CASTING CONTACT COOLING

Ingot molds traveling on conveyers are sprayed with water to cool and solidify the molten metal.

Oil and grease, used to lubricate mold conveyer systems, is washed from the equipment as the product is sprayed with water. The quantity of ingot conveyer wastewater can be reduced by recycle or the reuse of the water in demagging wet air pollution control.

Casting contact cooling water contains treatable concentrations

of aluminum, oil and grease, and suspended solids.

Of the 17 facilities known to have ingot conveyer casting, only one plant uses any sort of treatment prior to discharge. Wastewater treatment at this plant consists of flotation and grit removal. Recycle is practiced at three plants.

SHOT CASTING CONTACT COOLING

The manufacture of deoxidizer shot involves allowing molten aluminum to flow through a mesh screen and fall (forming a spherical shot product) into a quenching tank. There are four plants known to manufacture shot, two of them are zero discharge through holding tanks and cooling towers. Chemical treatment of the wastewater is not practiced at any of the four plants.

CONTROL AND TREATMENT OPTIONS CONSIDERED

Based on an examination of the wastewater sampling data, two treatment technologies that effectively control the pollutants found in secondary aluminum wastewaters were selected for evaluation. These technology options are discussed below.

OPTION A

Option A for the secondary aluminum subcategory is analogous to BPT treatment with a few modifications. Option A requires control and treatment technologies to reduce the discharge of wastewater volume and pollutant mass. Recycle of casting contact cooling water is the control mechanism for flow reduction.

The Option A treatment model consists of ammonia stream stripping pretreatment applied to the dross washing wastewater stream, activated carbon adsorption pretreatment for total phenolics, pretreatment of casting cooling water with oil skimming, and lime and settle technology (chemical precipitation and sedimentation) applied to the combined stream of steam stripper effluent, demagging air pollution scrubbing wastewater, delacquering air pollution scrubbing wastewater, and casting contact cooling wastewater. Chemical precipitation is used to remove metals by the addition of lime followed by gravity sedimentation: Suspended solids are also removed from the process. Option A varies slightly from the promulgated BPT technology in that the existing BPT requires zero discharge of metal cooling water. Data submitted to the Agency (see Section IX) have demonstrated the need for a blowdown from ingot conveyer casting when demagging scrubbers are not operated. Therefore, Option A includes 90 percent recycle of cooling water when demagging wet air pollution control is not practiced, and 100 percent reuse when demagging wet air pollution control is practiced.

OPTION C

Option C for the secondary aluminum subcategory consists of

preliminary treatment with ammonia steam stripping, oil skimming, activated carbon adsorption, in-process flow reduction, and the chemical precipitation and sedimentation technology considered in Option A plus multimedia filtration end-of-pipe technology. Multimedia filtration is used to remove suspended solids, including precipitates of metals, beyond the concentration attainable by gravity sedimentation. The filter suggested is of the mixed media type, although other forms of filters such as rapid sand filters or pressure filters would perform satisfactorily. The addition of filters also provides consistent removal during periods in which there are rapid increases in flows or loadings of pollutants to the treatment scheme.

CONTROL AND TREATMENT OPTIONS REJECTED

Prior to proposing mass limitations for the secondary aluminum subcategory, the Agency evaluated reverse osmosis as an end-of-pipe treatment technology. However, reverse osmosis was rejected because it is not demonstrated in the nonferrous metals manufacturing subcategory, nor is it clearly transferable. The Option F treatment scheme is discussed below.

Option F for the secondary aluminum subcategory consisted of preliminary treatment with ammonia steam stripping and oil skimming in-process flow reduction, chemical precipitation, sedimentation, and multimedia filtration technology considered in Option C with the addition of reverse osmosis and evaporation end-of-pipe technology. Option F is used for complete recycle of the treated water by controlling the concentration of dissolved solids. Multiple-effect evaporation is used to dewater the brines rejected from reverse osmosis.

THIS PAGE INTENTIONALLY LEFT BLANK

SECTION VIII

COSTS, ENERGY, AND NONWATER QUALITY ASPECTS

This section describes the method used to develop the costs associated with the control and treatment technologies discussed in Section VII for wastewaters from secondary aluminum plants. The energy requirements of the considered options, as well as solid waste and air pollution aspects, are also discussed in this section.

TREATMENT OPTIONS CONSIDERED

As discussed in Section VII, two control and treatment options are considered for treating wastewater from the secondary aluminum subcategory. Cost estimates, in the form of annual cost curves, have been developed for each of these control and treatment options. The control and treatment options are presented schematically in Figures X-1 and X-2 (pages 995 and 996) and summarized below.

OPTION A

Option A for the secondary aluminum subcategory requires control and treatment technologies to reduce the discharge of wastewater volume and pollutant mass. The recycle of ingot conveyer casting contact cooling water through cooling towers or 100 percent reuse in demagging scrubbers and the recycle of scrap drying and delacquering scrubber water through holding tanks are the control mechanisms for flow reduction. The Option A treatment technology consists of ammonia steam stripping preliminary treatment applied to the dross washing wastewater stream, and oil skimming preliminary treatment applied to the casting contact cooling water stream. Activated carbon adsorption preliminary treatment is required for phenolics in delacquering scrubber liquor. Preliminary treatment is followed by lime precipitation and sedimentation applied to the combined stream of steam stripper effluent, casting contact cooling water, delacquering scrubber blowdown, and demagging scrubber water.

OPTION C

Option C for the secondary aluminum subcategory consists of all the control and treatment technologies of Option A (in-process flow reduction through holding tanks and cooling towers, ammonia steam stripping and oil skimming preliminary treatment, and lime precipitation and sedimentation end-of-pipe treatment) with the addition of multimedia filtration to the end-of-pipe treatment scheme.

Cost Methodology

A detailed discussion of the methodology used to develop the compliance costs is presented in Section VIII of the General Development Document. Plant-by-plant compliance costs have been estimated for the secondary aluminum subcategory and are presented in the administrative record supporting this regulation. A comparison of the costs developed for proposal and the revised costs for the final regulation are presented in Tables VIII-1 and VIII-2 (pages 970 and 971) for the direct and indirect dischargers, respectively.

Each of the major assumptions used to develop compliance costs is presented in Section VIII of the General Development Document. Each subcategory contains a unique set of waste streams requiring certain subcategory-specific assumptions to develop compliance costs. Seven major assumptions are discussed briefly below.

(1) Annual costs (except for amortized investment) for lime and settle treatment were incurred to comply with the promulgated BPT regulation. These costs were not included in the current regulation if lime and settle treatment is in place.

(2) Chemical precipitation costs were based on lime addition except for plants that currently utilize sodium hydroxide or soda ash. In these cases, sodium hydroxide addition was assumed for cost estimation.

(3) Activated carbon adsorption was included as a preliminary treatment step for delacquering scrubber blowdown to control phenolics. Analytical data supplied to the Agency indicate TSS concentrations were small enough not to cause plugging, so pretreatment prior to entering the column was unnecessary.

(4) Ammonia steam stripping was included as a preliminary treatment step for dross washing. Since the steam requirements for such treatment may exceed the excess steam generation capacity of a given plant, a steam generation unit was included in the costs.

(5) The ingot conveyer casting contact cooling water was routed to the demagging scrubber operation (if this operation was present), and the costs of this routing were included. When demagging wet air pollution control was not practiced at the plant, compliance costs were based on 90 percent recycle through cooling towers.

(6) Recycle of air pollution control scrubber liquor was based on recycle through holding tanks. Annual costs associated with maintenance and sludge disposal were included in the estimated compliance costs. Spent activated carbon was assumed to be regenerated or disposed of as a hazardous waste depending on volume

generated. If a plant currently recycles scrubber liquor, capital costs of the recycle equipment (piping, pumps, and holding tanks) were not included in the compliance costs.

(7) Capital and annual costs for plants discharging in both the secondary and primary aluminum subcategories were based on a combined treatment system and were apportioned to each subcategory on a flow-weighted basis.

NONWATER QUALITY ASPECTS

A general discussion of the nonwater quality aspects of the control and treatment options considered for the nonferrous metals category is contained in Section VIII of the General Development Document. Nonwater quality impacts specific to the secondary aluminum subcategory including energy requirements, solid waste, and air pollution are discussed below.

ENERGY REQUIREMENTS

The methodology used for determining the energy requirements for the various options is discussed in Section VIII of the General Development Document. Implementation of Option A technology is estimated to require 2.4 MW-hr/yr, while Option C would require 2.5 MW-hr/yr for the subcategory. At a typical secondary aluminum plant, Option A represents a 2.3 percent increase in overall electrical consumption, and Option C represents a 2.4 percent increase in overall electrical consumption. Therefore, it is concluded that the technology options considered will have a minimal impact on energy consumption in the secondary aluminum subcategory.

SOLID WASTE

Sludges associated with the secondary aluminum subcategory will necessarily contain toxic quantities (and concentrations) of toxic metal pollutants. The Agency examined the solid wastes that would be generated at secondary aluminum plants by lime, settle, and filter treatment technologies and believes they are not hazardous wastes under the Agency's regulations implementing Section 3001 of the Resource Conservation and Recovery Act. None of these wastes is listed specifically as hazardous. Nor are they likely to exhibit a characteristic of hazardous waste. By the addition of excess lime during treatment, similar sludges, specifically toxic metal bearing sludges, generated in other industrial categories such as the iron and steel and electroplating categories, passed the Extraction Procedure (EP) toxicity test. See 40 CFR §261.24. Thus, the Agency believes that the wastewater sludges will similarly not be EP toxic if the recommended technology is applied.

Certain secondary aluminum plants also will generate spent activated carbon which will be contaminated with phenols. Such spent carbon is not listed as a hazardous waste and would be

unlikely to exhibit a characteristic of hazardous waste. Nevertheless, the Agency has included costs for disposing of spent carbon as a hazardous waste, or (where volumes justify the practice) of regenerating it. Spent carbon is not currently subject to RCRA regulation when stored before recycling. See 40 CFR §261.6(a).

Although it is the Agency's view that solid wastes generated as a result of these guidelines are not expected to be hazardous, generators of these wastes must test the waste to determine if the wastes meet any of the characteristics of hazardous waste (see 40 CFR 262.11).

If these wastes should be identified or are listed as hazardous, they will come within the scope of RCRA's "cradle to grave" hazardous waste management program, requiring regulation from the point of generation to point of final disposition. EPA's generator standards require generators of hazardous nonferrous metals manufacturing wastes to meet containerization, labeling, record keeping, and reporting requirements. If plants dispose of hazardous wastes off-site, they are required to prepare a manifest which tracks the movement of the wastes from the generator's premises to a permitted off-site treatment, storage, or disposal facility. See 40 CFR 262.20 (45 FR 33142, May 19, 1980, as amended at 45 FR 86973, December 31, 1980). The transporter regulations require transporters of hazardous wastes to comply with the manifest system to assure that the wastes are delivered to a permitted facility. (See 40 CFR 263.20 45 FR 33151, May 19, 1980, as amended at 45 FR 86973, December 31, 1980). Finally, RCRA regulations establish standards for hazardous waste treatment, storage, and disposal facilities allowed to receive such wastes. (See 40 CFR Part 264, 46 FR 2802, January 12, 1981, 47 FR 32274, July 26, 1982).

Even if these wastes are not identified as hazardous, they still must be disposed of in compliance with the Subtitle D open dumping standards, implementing 4004 of RCRA. (See 44 FR 53438, September 13, 1979). The Agency has calculated as part of the costs for wastewater treatment the cost of hauling and disposing of these wastes. The Agency estimates implementation of lime and settle technology will generate approximately 11,000 tons per year of wastewater treatment sludge. Treatment of delacquering wet air pollution control will generate approximately 177 pounds per year of spent carbon. Multimedia filtration technology will not result in any significant amount of sludge over that generated by lime precipitation.

AIR POLLUTION

There is no reason to believe that any substantial air pollution problems will result from implementation of ammonia steam stripping, oil skimming, chemical precipitation, sedimentation, and multimedia filtration. These technologies transfer pollutants to solid waste and do not involve air stripping or any other physical process likely to transfer pollutants to air.

Water vapor containing some particulate matter will be released in the drift from the cooling tower systems which are used as the basis for flow reduction in the secondary aluminum subcategory. However, the Agency does not consider this impact to be significant.

Table VIII-1

COST OF COMPLIANCE FOR THE SECONDARY ALUMINUM SUBCATEGORY

DIRECT DISCHARGERS*

	Proposal		Promulgation	
Option	Capital Cost	Annual Cost	Capital Cost	Annual Cost
A	2,000,000	1,800,000	1,000,000	600,000
C	2,200,000	1,900,000	1,100,000	640,000

*1982 dollar

Table VIII-2

COST OF COMPLIANCE FOR THE SECONDARY ALUMINUM SUBCATEGORY

INDIRECT DISCHARGERS*

	Proposal		Promulgation	
Option	Capital Cost	Annual Cost	Capital Cost	Annual Cost
A	3,000,000	2,000,000	2,100,000	1,300,000
C	3,300,000	2,200,000	2,300,000	1,400,000

*1982 dollars

THIS PAGE INTENTIONALLY LEFT BLANK

SECTION IX

BEST PRACTICABLE CONTROL TECHNOLOGY CURRENTLY AVAILABLE

EPA promulgated best practicable control technology currently available (BPT) effluent limitations standards for the secondary aluminum industry on April 8, 1974 as Subpart C of 40 CFR Part 421. Pollutants regulated by these standards are aluminum, copper, chemical oxygen demand, ammonia, fluoride, TSS, and pH. Unlike the current rulemaking, the BPT standards were developed on the basis of two subdivisions of the secondary aluminum process, not on the basis of segments that isolate individual wastewater streams. BPT standards were established for magnesium removal processes (demagging using either chlorine or aluminum fluoride) and wet residue processes. The effluent limitations established by the 1974 BPT standards also require zero discharge of metal cooling water.

(a) The following limitations establish the quantity or quality of pollutants or pollutant properties, which may be discharged by a point source subject to the provisions of this subpart and which uses water for metal cooling, after application of the best practicable control technology currently available: There shall be no discharge of process wastewater pollutants to navigable waters.

(b) The following limitations establish the quantity or quality of pollutants or pollutant properties which may be discharged by a point source subject to the provisions of this subpart and which uses aluminum fluoride in its magnesium removal process ("demagging process"), after application of the best practicable control technology currently available: There shall be no discharge of process wastewater pollutants to navigable waters.

(c) The following limitations establish the quantity or quality of pollutants or pollutant properties controlled by this section, which may be discharged by a point source subject to the provisions of this subpart and which uses chlorine in its magnesium removal process, after application of the best practicable control technology currently available:

Effluent Characteristic	Effluent Limitations Average of daily values for 30 consecutive days shall not exceed
	Metric units (kilograms per 1,000 kg magnesium removed) English units (lbs per 1,000 lbs magnesium removed)
TSS	175
COD	6.5
pH	Within the range of 7.5 to 9.0

(d) The following limitations establish the quantity or quality of pollutants or pollutant properties which may be discharged by a point source subject to the provisions of this subpart and which processes residues by wet methods, after application of the best practical control technology currently available:

Effluent Characteristic	Effluent Limitations Average of daily values for 30 consecutive days shall not exceed
	Metric units (kilograms per 1,000 kg magnesium removed) English units (lbs per 1,000 lbs magnesium removed)
TSS	1.5
Fluoride	0.4
Ammonia (as N)	0.01
Aluminum	1.0
Copper	0.003
COD	1.0
pH	Within the range of 7.5 to 9.0

SECTION X

BEST AVAILABLE TECHNOLOGY ECONOMICALLY ACHIEVABLE

The effluent limitations are based on the best control and treatment technology used by a specific point source within the industrial category or subcategory, or by another industry where it is readily transferable. Emphasis is placed on additional treatment techniques applied at the end of the treatment systems currently used for BPT, as well as reduction of the amount of water used and discharged, process control, and treatment technology optimization.

The factors considered in assessing best available technology economically achievable (BAT) include the age of equipment and facilities involved, the process used, process changes, nonwater quality environmental impacts (including energy requirements), and the costs of application of such technology (Section 304(b)(2)(B) of the Clean Water Act). At a minimum, BAT represents the best available technology economically achievable at plants of various ages, sizes, processes, or other characteristics. Where the Agency has found the existing performance to be uniformly inadequate, BAT may be transferred from a different subcategory or category. BAT may include feasible process changes or internal controls, even when not in common industry practice.

The required assessment of BAT considers costs, but does not require a balancing of costs against effluent reduction benefits (see Weyerhaeuser v. Costle, 590 F.2d. 1011 (D.C. Cir. 1978)). However, in assessing the proposed BAT, the Agency has given substantial weight to the economic achievability of the technology.

On April 8, 1974, EPA promulgated technology-based BAT effluent limitations guidelines for the secondary aluminum subcategory. BAT required zero discharge based on 100 percent recycle of casting contact cooling water and in-process changes which eliminate demagging wet air pollution control and residue milling (dross washing). Elimination of demagging scrubbers was based on the installation of the Durham process, ALCOA process, and the Teller process, which significantly reduces fuming during demagging and the need for wet scrubbers. The Agency believed that each of these processes was sufficiently well demonstrated to be installed and become operational by 1984. Consequently, there was no justification for a discharge allowance associated with this waste stream. However, new information shows that the technologies are not sufficiently demonstrated nor are they applicable to plants on a nationwide basis.

A similar situation exists for dross washing. Zero discharge for this operation was based on demonstrated dry milling in the subcategory. However, the extensive retrofits of installing dry milling have prompted EPA to reevaluate the existing BAT zero

discharge requirement. For these reasons, the existing BAT is modified to allow a discharge for demagging wet air pollution control and dross washing.

TECHNICAL APPROACH TO BAT

In pursuing this second round of effluent regulations, EPA reviewed a wide range of technology options and evaluated the available possibilities to ensure that the most effective and beneficial technologies were used as the basis of BAT. To accomplish this, the Agency elected to examine two technology alternatives which could be applied to the secondary aluminum subcategory as BAT options.

In summary, the treatment technologies considered for BAT are presented below:

Option A (Figure X-1, page 995) is based on

- Preliminary treatment with oil skimming (where required)
- Preliminary treatment of dross washing wastewater with ammonia steam stripping
- Preliminary treatment of delacquering wet air pollution control wastewater with activated carbon adsorption
- In-process flow reduction of casting contact cooling water and scrubber liquor resulting from scrap drying and delacquering wet air pollution control
- Chemical precipitation and sedimentation

Option C (Figure X-2, page 996) is based on

- Preliminary treatment with oil skimming (where required)
- Preliminary treatment of dross washing wastewater with ammonia steam stripping
- Preliminary treatment of delacquering wet air pollution control wastewater with activated carbon adsorption
- In-process flow reduction of casting contact cooling water and scrubber liquor resulting from scrap drying and delacquering wet air pollution control
- Chemical precipitation and sedimentation
- Multimedia filtration

The two options for BAT are discussed in greater detail below. The first option considered is analogous to the BPT treatment and control technology.

OPTION A

Option A requires control and treatment techologies to reduce the discharge of wastewater volume and pollutant mass. These measures include in-process changes, resulting in the elimination of some wastewater streams and the concentration of pollutants in other effluents. As explained in Section VII of the General Development Document, treatment of a more concentrated effluent

allows achievement of a greater net pollutant removal and introduces the possible economic benefits associated with treating a lower volume of wastewater. Methods used in Option A to reduce process wastewater generation or discharge rates include the following:

Recycle of Casting Contact Cooling Water

The function of casting contact cooling water is to quickly remove heat from the newly formed ingot or bar. Therefore, the principal requirements of the water are that it be cool and not contain dissolved solids at a concentration that would cause water marks or other surface imperfections. There is sufficient category experience with casting contact cooling wastewaters to assure the success of this technology using cooling towers or heat exchangers (refer to Section VII of the General Development Document). A blowdown or periodic cleaning is likely to be needed to prevent a build-up of dissolved and suspended solids. (EPA has determined that a blowdown of 10 percent of the water applied in a process is adequate.)

Reuse of casting contact cooling water is also an effective means of reducing flow. One plant in the secondary aluminum subcategory has demonstrated that ingot conveyer casting contact cooling water can be reused as demagging scrubber liquor make-up. EPA knows of no engineering reason why this water is unsuitable for make-up water to the demagging scrubber.

Recycle of Water Used in Wet Air Pollution Control

There are three wastewater sources associated with wet air pollution control which are regulated under these effluent limitations:

1. Delacquering,
2. Scrap drying, and
3. Demagging.

Table X-1 (page 987)presents the number of plants reporting wastewater use with these sources, the number of plants practicing recycle of scrubber liquor, and the range of recycle values being used.

The Option A treatment model includes in-process flow reduction, steam stripping and activated carbon adsorption preliminary treatment of wastewaters containing ammonia and phenolics at treatable concentrations and oil skimming, where required. Preliminary treatment is followed by chemical precipitation and sedimentation (see Figure X-1, page 987). Although oil and grease is a conventional pollutant limited under best practicable technology (BPT), oil skimming is needed for BAT to ensure proper metals removal. Oil and grease interferes with the chemical addition and mixing required for chemical precipitation treatment. Chemical precipitation is used to remove metals by the addition of lime followed by gravity sedimentation.

Suspended solids are also removed from the process.

OPTION C

Option C for the secondary aluminum subcategory builds upon the Option A control and treatment technology of in-process flow reduction, oil skimming (where required), ammonia steam stripping, activated carbon adsorption, chemical precipitation, and sedimentation by adding multimedia filtration technology at the end of the Option A treatment scheme (see Figure X-2, page 988). Multimedia filtration is used to remove suspended solids, including precipitates of metals, beyond the concentration attainable by gravity sedimentation. The filter suggested is of the gravity, mixed media type, although other forms of filters, such as rapid sand filters or pressure filters, would perform satisfactorily.

INDUSTRY COST AND POLLUTANT REMOVAL ESTIMATES

As a means of evaluating each technology option, EPA developed estimates of the pollutant removal estimates and the compliance costs associated with each option. The methodologies are described below.

POLLUTANT REMOVAL ESTIMATES

A complete description of the methodology used to calculate the estimated pollutant reduction achieved by the application of the various treatment options is presented in Section X of the General Development Document. The pollutant removal estimates have been revised from proposal based on comments and new data. However, the methodology for calculating pollutant removals has not changed. The data used for estimating pollutant removals are the same as those used to revise the compliance costs.

Sampling data collected during the field sampling program were used to characterize the major waste streams considered for regulation. At each sampled facility, the sampling data were production normalized for each unit operation (i.e., mass of pollutant generated per mass of product manufactured). This value, referred to as the raw waste, was used to estimate the mass of toxic pollutants generated within the secondary aluminum subcategory. By multiplying the total subcategory production for a unit operation by the corresponding raw waste value, the mass of pollutant generated for that unit operation was estimated.

The volume of wastewater discharged after the application of each treatment option was estimated for each operation at each plant by comparing the actual discharge to the regulatory flow. The smaller of the two values was selected and summed with other plant flows. The mass of pollutant discharged was then estimated by multiplying the achievable concentration values attainable by the option (mg/l) by the estimated volume of process wastewater discharged by the subcategory. The mass of pollutant removed is simply the difference between the estimated mass of pollutant

generated within the subcategory and the mass of pollutant discharged after application of the treatment option. Pollutant removal estimates for the secondary aluminum direct dischargers are presented in Table X-2 (page 988).

COMPLIANCE COSTS

Compliance costs presented at proposal were estimated using cost curves, which related the total costs associated with installation and operation of wastewater treatment technologies to plant process wastewater discharge. EPA applied these curves on a per plant basis, a plant's costs (both capital, and operating and maintenance) being determined by what treatment it has in-place and by its individual process wastewater discharge (from dcp). The final step was to annualize the capital costs, and to sum the annualized capital costs, and the operating and maintenance costs, yielding the cost of compliance for the subcategory.

Since proposal, the cost estimation methodology has been changed as discussed in Section VIII of this supplement. A design model and plant-specific information were used to size a wastewater treatment system for each discharging facility. After completion of the design, capital and annual costs were estimated for each unit of the wastewater treatment system. Capital costs rely on vendor quotes, while annual costs were developed from the literature. The revised compliance costs for direct dischargers are presented in Table VIII-1 (page 970).

BAT OPTION SELECTION

EPA has selected Option C as the basis of BAT in this subcategory. The BAT treatment scheme proposed consists of flow reduction, oil skimming (where required), preliminary treatment of ammonia steam stripping and activated carbon, lime precipitation, sedimentation, and filtration for control of toxic metals. The selected option increases the removal of toxic pollutants from raw wastewater by approximately 9,600 kg/yr, 530 kg/yr of phenolics, and nonconventional pollutants by approximately 90,800 kg/yr. This option also removes approximately 8.2 kg/yr of toxic pollutants and 36 kg/yr of nonconventional pollutants over the estimated BPT discharge. The estimated capital cost of proposed BAT is $1.1 million (1982 dollars) and the annual cost is $0.64 million (1982 dollars).

Ammonia steam stripping is demonstrated in the nonferrous metals manufacturing category by two plants in the primary columbium-tantalum subcategory, and three plants in the primary tungsten subcategory. Activated carbon is not demonstrated in the subcategory, but it is a classic means of removing phenols from wastewater.

Activated carbon is demonstrated in the iron and steel (cokemaking) category as a phenols removal technology. The treatment performance used for activated carbon to develop mass

limitations for total phenolics is based on the attainable quantification limit of 0.010 mg/l. EPA believes this value is achievable when adequate quantities of carbon are used.

At the source requirements (i.e., requiring that compliance be demonstrated and monitoring conducted prior to commingling with process or nonprocess waters) are promulgated for phenol in delacquering wet air pollution control wastewaters. This is because there is a distinct possibility that plants may be able to meet the limits for toxic organics through dilution unless the compliance point is at-the-source, rather than end-of-pipe. This is because the organic pollutants are present in wastewater from only certain unit operations, and are present at concentrations that could be reduced below the analytical detection levels after commingling with other process wastewaters. The plants known to currently operate delacquering scrubbers are principally primary aluminum and aluminum forming plants, which generate much larger volumes of process wastewater than the delacquering operation. Therefore, at-the-source requirements are promulgated to prevent dilution.

Carbon adsorption may require preliminary treatment to remove suspended solids and oil and grease. Suspended solids concentrations in the influent should be reduced to minimize backwash requirements. Four sample analyses of delacquering scrubber liquor submitted to the Agency showed suspended solids concentrations of 22, 9.0, 17.2, and 60.8 mg/l.

These concentrations are essentially those achievable with lime and settle treatment (19.5 mg/l ten day average). Therefore, it appears pretreatment for TSS is not required prior to activated carbon adsorption pretreatment. Oil and grease data were not submitted.

Since filtration removes additional toxic and nonconventional pollutants, and is economically achievable, it is included as part of proposed BAT. Filtration also adds to the treatment system reliability by making it less susceptible to operator error and to sudden changes in raw wastewater flows and concentrations. Further, the selection of filters is an appropriate balance to the elimination of previously promulgated no discharge BAT requirements for ingot conveyer casting and dross washing. Providing these two allowances is only justified when the Agency can assume that most of the pollutants contained in these discharges will be removed by treatment.

For the Secondary Aluminum Subcategory, EPA promulgated final amendments on July 7, 1987 (52 FR 25552) to the regulation concerning two topics, which are described here.

EPA has amended the flow basis for two subdivisions based on a re-evaluation of data available in the Administrative Record for this rulemaking. These two subdivisions are ingot conveyer casting and demagging wet air pollution control.

WASTEWATER DISCHARGE RATES

Specific wastewater streams associated with the secondary aluminum subcategory are generated from scrap drying air pollution control, scrap screening and milling, dross washing, demagging wet air pollution control, delacquering wet air pollution control, direct chill casting contact cooling, ingot conveyer casting contact cooling, shot casting contact cooling, and stationary casting contact cooling.

Table X-3 (page 989) lists the production normalized wastewater discharge rates allocated at BAT for these wastewater streams. The values represent the best existing practices of the industry, as determined from the analysis of dcps. Individual discharge rates from the plants surveyed are presented in Section V of this supplement for each wastewater stream.

SCRAP DRYING WET AIR POLLUTION CONTROL WASTEWATER

No BAT wastewater discharge allowance was proposed for scrap drying air pollution control. Only three of 29 plants use scrubbers to control emissions; the remaining 26 plants use baghouses. Two of the three plants with scrubbers achieve zero discharge by 100 percent recycle. One plant is a once-through discharger with a rate of 1,057 l/kkg (253.5 gal/ton) of aluminum scrap produced. This plant also reported that it planned to discontinue the use of the scrubber. Wastewater rates are presented in Section V (Table V-1, page 912). The BAT allowance is zero discharge of wastewater pollutants based on the attainment of no discharge by 28 of 29 plants, including two of the three operations using wet air pollution control. No data or information were submitted to the Agency demonstrating zero discharge as proposed is not attainable.

SCRAP SCREENING AND MILLING

No BAT wastewater discharge rate was proposed for scrap screening and milling. Both plants reporting this wastewater are zero dischargers because of 100 percent recycle or reuse. Therefore, the Agency believes that zero discharge is possible for all secondary aluminum scrap screening and milling processes. No data or information were submitted to the Agency demonstrating a discharge allowance is needed for scrap screening and milling.

DROSS WASHING WASTEWATER

The proposed BAT wastewater discharge rate was 10,868 l/kkg (2,607 gal/ton) of dross processed. Four plants reported producing this wastewater. Two plants discharge from the process after 67 percent recycle. One plant completely evaporates this wastewater. The BAT rate is the discharge from plant 4104. Two plants recycle 100 percent of the wastewater. No data or information were submitted to the Agency demonstrating that the proposed discharge allowance was not appropriate; therefore, the promulgated discharge rate is equal to that proposed. EPA

considers the zero discharge practices for this waste stream to be site-specific and not applicable on a nationwide basis. Wastewater rates for dross washing are presented in Section V (Table V-3, page 914).

DEMAGGING WET AIR POLLUTION CONTROL

The proposed BAT wastewater discharge rate was 800 l/kkg (192 gal/ton) of aluminum demagged. This rate is allocated only for plants practicing wet air pollution control of demagging operations. Of the 37 demagging operations reported, 20 use water for emissions control. Nine plants using water reported no wastewater discharge, achieved by recycle or reuse. Eight of the nine plants completely recycle the wastewater, while one plant did not report a recycle percentage. Another plant practices a partial recycle of 40 percent. Nine plants were thought to have once-through operations, eight of these discharging 223.3 to 1,956.24 l/kkg (54.5 to 469.2 gal/ton). No flow data were provided by one of the discharging plants. A distribution of wastewater rates considered is presented in the proposed secondary aluminum supplemental development document. Industry comments prior to proposal asserted that the use of recirculation systems using treated water reduces demagging scrubber efficiency. Therefore, recycle of scrubber liquor was not used as a basis for the BAT discharge rate for demagging wet air pollution control. The BAT discharge rate was based on the average of the nine discharging plants.

Commenters on the proposed mass limitations questioned the reported 100 percent recycle of demagging scrubber liquor in the proposed supplemental development document. In addition, commenters questioned the calculation of the demagging scrubber discharge allowance. Based on these comments, the Agency re-evaluated the discharge rate for demagging scrubber liquor. Four plants were identified and confirmed to achieve zero discharge of demagging scrubber liquor. Zero discharge at these plants is site-specific and not appropriate on a national basis. A blowdown from demagging scrubbers is required to control chloride concentrations in the scrubber liquor. Those plants reporting zero discharge recycle from ponds with large capacitites and they may also be losing water through percolation.

The most predominant scrubber used for demagging is the Intecbell scrubber. Three plants reported using venturi scrubbers and one plant uses a packed tower. Water use between these three scrubbers is not significantly different; therefore, all data were considered together in selecting the BAT discharge rate. The promulgated BAT discharge rate was 697 l/kkg of aluminum demagged. This rate represented the average water use at those plants using less than 6,885 l/kkg. Two plants were above this rate, and they were not considered because they use an inordinately large amount of scrubber liquor when compared to the other plants.

The Agency has amended the flow rate for demagging wet air pollution control upon which are based the BAT limitations and NSPS, PSES, and PSNS for the demagging wet air pollution control subdivision. Secondary aluminum petitioners claimed that the control flow allowance of 697 l/kkg was incorrect due to a data interpretation error regarding the number of scrubbers associated with the water usage for one facility. The Agency agrees that it made an error in this calculation and has adjusted the water usage for this plant upwards. As a result, the final regulatory flow allowance is 771 l/kkg.

DELACQUERING WET AIR POLLUTION CONTROL

A BAT discharge rate has been added to account for wastewater associated with wet scrubbing of air pollution generated through the recycle of aluminum cans. Five plants reported the use of this scrubber as shown in Table V-7. The BAT discharge rate is based on the average reported discharge for plants 505, 313, and 4101. Each of these plants practices recycle of 97 percent or greater and uses a venturi scrubber. The BAT discharge rate is 80 l/kkg. Plant 340 was not included in the average because it uses a rotoclone scrubber. Water discharged for plant 340 with no recycle compares well with the plants practicing recycle.

DIRECT CHILL CASTING CONTACT COOLING WATER

The BAT wastewater discharge rate for direct chill casting contact cooling water was proposed as 1,999 l/kkg (479.4 gal/ton) of aluminum cast. Direct chill casting practices and the wastewater discharge from this operation are similar in aluminum forming, primary aluminum reduction and secondary aluminum plants. The information available does not indicate any significant difference in the amount of water required for direct chill casting in primary aluminum, secondary aluminum and aluminum forming plants. For this reason, available wastewater data from aluminum forming and primary aluminum plants were considered together in establishing BPT effluent limitations. No data for direct chill casting water use were provided by secondary aluminum plants.

In all, 26 primary aluminum plants and 61 aluminum forming plants have direct chill casting operations. Recycle of the contact cooling water is practiced at 30 aluminum forming and eight primary aluminum plants. Of these, eight plants indicated that total recycle of this stream made it possible to avoid any discharge of wastewater; however, the majority of the plants discharge a bleed stream. The discharge flow for this operation was based on the average of those plants practicing 50 percent recycle or greater.

The Agency was in error in this determination (as pointed out by a commenter from the aluminum industry) as it considers 90 percent recycle or greater BAT technology. (See 48 FR at 7052, Feb. 17, 1983). Therefore, the BAT discharge allowance has been recalculated based on those plants (both primary aluminum and

aluminum forming) that have recycle rates between 90 and 100 percent. The revised BAT discharge rate is thus 1,329 l/kkg (319 gal/ton) of aluminum cast. Although there are no reported secondary aluminum plants with direct chill casting, the Agency will promulgate mass limitations for this segment. It is possible new or existing sources may install direct chill casting in the future.

INGOT CONVEYER CASTING CONTACT COOLING WATER

In the proposed guidelines for this subcategory, ingot conveyer casting was considered stationary casting because of the promulgated zero discharge for metal cooling in the existing BPT and BAT effluent limitations. However, information and data submitted to the Agency indicate zero discharge of ingot conveyer casting is not demonstrated except when the discharge is recycled to a demagging air pollution scrubber. Therefore, a discharge allowance was provided in the promulgated regulation for ingot conveyer casting. The discharge rate, based on 90 percent recycle, was 43 l/kkg (10.3 gal/ton) of aluminum cast. This rate was based on the average water usage with the exception of plants 309 and 326. Data from these two plants were not used because of excessive water use as determined through comparison with the other plants. Only those plants not operating demagging scrubbers are provided the ingot conveyer casting allowance. One hundred percent reuse of casting water or demagging scrubber make-up water is demonstrated at one secondary aluminum facility.

The Agency has amended the flow rate upon which the BAT limitations and NSPS, PSES, and PSNS for ingot conveyer casting are based. Petitioners claimed that the regulatory flow allowance of 43 l/kkg was incorrect due to data interpretation mistakes and because the Agency unnecessarily excluded the water usage of plants that reported achieving zero discharge. EPA has promulgated an amended flow allowance of 67 l/kkg, which is based on corrected water usage data from five plants (these data involving water usage and operating schedules which were interpreted incorrectly by the Agency in constructing the flow allowance in the final rule) and includes three plants' water usage that reported achieving zero discharge. This is consistent with EPA's methodology employed throughout the nonferrous metals rulemaking, where the Agency typically used water usage at zero discharge plants in determining what degrees of flow reduction represent BAT, PSES, NSPS, and PSNS.

STATIONARY CASTING CONTACT COOLING WATER

No BAT wastewater discharge allowance is provided for stationary casting cooling. In the stationary casting method, molten aluminum is poured into cast iron molds and then generally allowed to air cool. The Agency is aware of the use of spray quenching to quickly cool the surface of the molten aluminum once it is cast into the molds; however, this water evaporates on contact with the molten aluminum. As such, the Agency believes that there is no basis for a pollutant discharge allowance.

SHOT CASTING CONTACT COOLING WATER

No BAT wastewater discharge allowance is provided for shot casting contact cooling. Through information requests the Agency has found zero discharge of shot casting cooling water demonstrated at two secondary aluminum facilities (of the four reporting the practice). Both of these plants reported no product quality constraints due to 100 percent recycle. Based on the demonstrated zero discharge practices for shot casting, the promulgated flow allowance requires zero discharge of process wastewater pollutants.

REGULATED POLLUTANT PARAMETERS

In implementing the terms of the Clean Water Act Amendments of 1977, the Agency placed particular emphasis on the toxic pollutants. The raw wastewater concentrations from individual operations and the subcategory as a whole were examined to select certain pollutants and pollutant parameters for consideration for limitation. This examination and evaluation, presented in Section VI, concluded that 10 pollutants and pollutant parameters are present in secondary aluminum wastewaters at concentrations that can be effectively reduced by identified treatment technologies.

However, the cost associated with analysis for toxic metal pollutants has prompted EPA to develop an alternative method for regulating and monitoring toxic pollutant discharges from the nonferrous metals manufacturing category. Rather than developing specific effluent mass limitations and standards for each of the toxic metals found in treatable concentrations in the raw wastewaters from a given subcategory, the Agency is promulgating effluent mass limitations only for those pollutants generated in the greatest quantities as shown by the pollutant removal estimate analysis. The pollutants selected for specific limitation are listed below:

122. lead
128. zinc
total phenols (4-AAP)
aluminum
ammonia

By establishing limitations and standards for certain toxic metal pollutants, dischargers will attain the same degree of control over toxic metal pollutants as they would have been required to achieve had all the toxic metal pollutants been directly limited.

This approach is justified technically since the treatable concentrations used for lime precipitation and sedimentation technology are based on optimized treatment for concomitant multiple metals removal. Thus, even though metals have somewhat different theoretical solubilities, they will be removed at very nearly the same rate in a lime precipitation and sedimentation

treatment system operated for multiple metals removal. Filtration as part of the technology basis is likewise justified because this technology removes metals non-preferentially. Thus, cadmium is excluded from limitation on the basis that it is effectively controlled by the limitations developed for lead and zinc.

The toxic metal pollutants selected for specific limitation in the secondary aluminum subcategory to control the discharges of toxic metal pollutants are lead and zinc. Ammonia and total phenolics are also selected for limitation since the methods used to control lead and zinc are not effective in the control of ammonia and total phenolics.

In Section VI, phenol was selected for further consideration for limitation. However, data submitted to the Agency are primarily in the form of total phenolics. Since phenol is contained in the total phenolics analysis, limitation of total phenols will also control the toxic pollutant phenol.

EFFLUENT LIMITATIONS

The treatable concentrations achievable by application of the BAT treatment are discussed in Section VII of this supplement. The treatable concentrations (both one day maximum and monthly average values) are multiplied by the BAT normalized discharge flows summarized in Table X-3 (page 989) to calculate the mass of pollutants allowed to be discharged per mass of product. The results of these calculations in milligrams of pollutant per kilogram of product represent the BAT effluent limitations and are presented in Table X-4 (page 990) for each waste stream.

Table X-1

CURRENT RECYCLE PRACTICES WITHIN THE SECONDARY ALUMINUM SUBCATEGORY

Waste Stream	Number of Plants With Wastewater	Number of Plants Practicing Recycle	Range of Recycle Values (%)
Delacquering Wet Air Pollution Control	5	3	97 - 98
Scrap Drying Wet Air Pollution Control	3	2	100
Demagging Wet Air Pollution Control	20	4	40 - 100
Ingot Conveyor Casting	17	2	50 - 96
Shot Casting	4	2	100

Table X-2

POLLUTANT REMOVAL ESTIMATES FOR SECONDARY ALUMINUM DIRECT DISCHARGERS

POLLUTANT	TOTAL RAW WASTE (kg/yr)	OPTION A DISCHARGED (kg/yr)	OPTION A REMOVED (kg/yr)	OPTION C DISCHARGED (kg/yr)	OPTION C REMOVED (kg/yr)
Cadmium	8,500.0	3.8	8,496.2	2.4	8,497.6
Lead	400.1	5.8	394.4	3.8	396.3
Zinc	704.6	15.8	688.8	11.0	693.6
TOTAL TOXIC METALS	9,604.7	25.4	9,579.3	17.2	9,587.5
Phenolics (4-AAP)	526.0	0.5	525.5	0.5	525.5
Aluminum	90,366.8	107.5	90,259.3	71.5	90,295.3
TOTAL NONCONVENTIONALS	90,892.7	108.0	90,784.7	72.0	90,820.7
TSS	198,351.1	575.9	197,775.2	124.8	198,226.3
Oil & Grease	12,613.6	479.9	12,133.7	479.9	12,133.7
TOTAL CONVENTIONALS	210,964.7	1,055.8	209,909.0	604.7	210,360.1
TOTAL POLLUTANTS	311,462.2	1,189.1	310,273.0	693.9	310,768.3
FLOW (l/yr)		47,990,000		47,990,000	

NOTE: TOTAL TOXIC METALS = Cadmium + Lead + Zinc
TOTAL NONCONVENTIONALS = Aluminum + Phenolics
TOTAL CONVENTIONALS = TSS + Oil & Grease
TOTAL POLLUTANTS = Total Toxic Metals + Total Nonconventionals + Total Conventionals

OPTION A = Oil Skimming, Ammonia Steam Stripping, Activated Carbon Adsorption, In-process Flow Reduction, and Lime Precipitation and Sedimentation
OPTION C = Option A, plus Multimedia Filtration

Table X-3

BAT WASTEWATER DISCHARGE RATES FOR THE SECONDARY ALUMINUM SUBCATEGORY

Waste Stream	BAT Normalized Discharge Rate l/kkg	BAT Normalized Discharge Rate gal/ton	Production Normalizing Parameter
Scrap Drying Wet Air Pollution Control	0	0	kkg of aluminum scrap dried
Scrap Screening and Milling	0	0	kkg of aluminum scrap screened and milled
Dross Washing	10,868	2,607	kkg of dross washed
Demagging Wet Air Pollution Control	697	167	kkg of aluminum demagged
Delacquering Wet Air Pollution Control	80	19	kkg of aluminum delacquered
Direct Chill Casting Contact Cooling	1,329	319	kkg of aluminum cast
Ingot Conveyor Casting Contact Cooling (When Chlorine Demagging Wet Air Pollution Control is Not Practiced On-Site)	43	10	kkg of aluminum cast
Ingot Conveyor Casting Contact Cooling (When Chlorine Demagging Wet Air Pollution Control is Practiced On-Site)	0	0	kkg of aluminum cast
Stationary Casting Contact Cooling	0	0	kkg of aluminum cast
Shot Casting Contact Cooling	0	0	kkg of aluminum cast

TABLE X-4

BAT EFFLUENT LIMITATIONS FOR THE
SECONDARY ALUMINUM SUBCATEGORY

Scrap Drying Wet Air Pollution Control

Pollutant or Pollutant property	Maximum for any one day	Maximum for monthly average
Metric Units - mg/kg of aluminum scrap dried		
English Units - lbs/million lbs of aluminum scrap dried		
Cadmium	0.000	0.000
*Lead	0.000	0.000
*Zinc	0.000	0.000
*Aluminum	0.000	0.000
*Ammonia (as N)	0.000	0.000

*Regulated Pollutant

Scrap Screening and Milling

Pollutant or Pollutant property	Maximum for any one day	Maximum for monthly average
Metric Units - mg/kg of aluminum scrap screened and milled		
English Units-lbs/million lbs of aluminum scrap screened and milled		
Cadmium	0.000	0.000
*Lead	0.000	0.000
*Zinc	0.000	0.000
*Aluminum	0.000	0.000
*Ammonia (as N)	0.000	0.000

*Regulated Pollutant

TABLE X-4 (Continued)

BAT EFFLUENT LIMITATIONS FOR THE
SECONDARY ALUMINUM SUBCATEGORY

Dross Washing

Pollutant or Pollutant property	Maximum for any one day	Maximum for monthly average
Metric Units - mg/kg of aluminum dross washed		
English Units - lbs/million lbs of aluminum dross washed		
Cadmium	2.174	0.869
*Lead	3.043	1.413
*Zinc	11.090	4.565
*Aluminum	66.400	29.450
*Ammonia (as N)	1449.000	636.900

*Regulated Pollutant

Demagging Wet Air Pollution Control

Pollutant or Pollutant property	Maximum for any one day	Maximum for monthly average
Metric Units - mg/kg of aluminum scrap demagged		
English Units - lbs/million lbs of aluminum scrap demagged		
Cadmium	0.139	0.056
*Lead	0.195	0.091
*Zinc	0.711	0.293
*Aluminum	4.250	1.889
*Ammonia (as N)	92.910	40.850

*Regulated Pollutant

TABLE X-4 (Continued)

BAT EFFLUENT LIMITATIONS FOR THE
SECONDARY ALUMINUM SUBCATEGORY

Delacquering Wet Air Pollution Control

Pollutant or Pollutant property	Maximum for any one day	Maximum for monthly average
Metric Units - mg/kg of aluminum delacquered		
English Units - lbs/million lbs of aluminum delacquered		
Cadmium	0.016	0.006
*Lead	0.022	0.010
*Zinc	0.082	0.034
*Aluminum	0.489	0.217
*Ammonia (as N)	10.670	4.688
*Total Phenols(4-AAP) **	0.001	—

*Regulated Pollutant
**At the source

Direct Chill Casting Contact Cooling

Pollutant or Pollutant property	Maximum for any one day	Maximum for monthly average
Metric Units - mg/kg of aluminum cast		
English Units - lbs/million lbs of aluminum cast		
Cadmium	0.266	0.106
*Lead	0.372	0.173
*Zinc	1.356	0.558
*Aluminum	8.120	3.602
*Ammonia (as N)	177.200	77.880

*Regulated Pollutant

TABLE X-4 (Continued)

BAT EFFLUENT LIMITATIONS FOR THE
SECONDARY ALUMINUM SUBCATEGORY

Ingot Conveyer Casting Contact Cooling (When Chlorine Demagging Wet Air Pollution Control is Not Practiced On-Site)

Pollutant or Pollutant property	Maximum for any one day	Maximum for monthly average
Metric Units - mg/kg of aluminum cast		
English Units - lbs/million lbs of aluminum cast		
Cadmium	0.009	0.003
*Lead	0.012	0.006
*Zinc	0.044	0.018
*Aluminum	0.263	0.117
*Ammonia (as N)	5.732	2.520

*Regulated Pollutant

Ingot Conveyor Casting Contact Cooling (When Chlorine Demagging Wet Air Pollution Control is Practiced On-Site)

Pollutant or Pollutant property	Maximum for any one day	Maximum for monthly average
Metric Units - mg/kg of aluminum screened & milled		
English Units - lbs/million lbs of aluminum screened & milled		
Cadmium	0.000	0.000
*Lead	0.000	0.000
*Zinc	0.000	0.000
*Aluminum	0.000	0.000
*Ammonia (as N)	0.000	0.000

*Regulated Pollutant

TABLE X-4 (Continued)

BAT EFFLUENT LIMITATIONS FOR THE
SECONDARY ALUMINUM SUBCATEGORY

Stationary Casting Contact Cooling

Pollutant or Pollutant property	Maximum for any one day	Maximum for monthly average
Metric Units - mg/kg of aluminum cast		
English Units - lbs/million lbs of aluminum cast		
Cadmium	0.000	0.000
*Lead	0.000	0.000
*Zinc	0.000	0.000
*Aluminum	0.000	0.000
*Ammonia (as N)	0.000	0.000

*Regulated Pollutant

Shot Casting Contact Cooling

Pollutant or Pollutant property	Maximum for any one day	Maximum for monthly average
Metric Units - mg/kg of aluminum cast		
English Units - lbs/million lbs of aluminum cast		
Cadmium	0.000	0.000
*Lead	0.000	0.000
*Zinc	0.000	0.000
*Aluminum	0.000	0.000
*Ammonia (as N)	0.000	0.000

*Regulated Pollutant

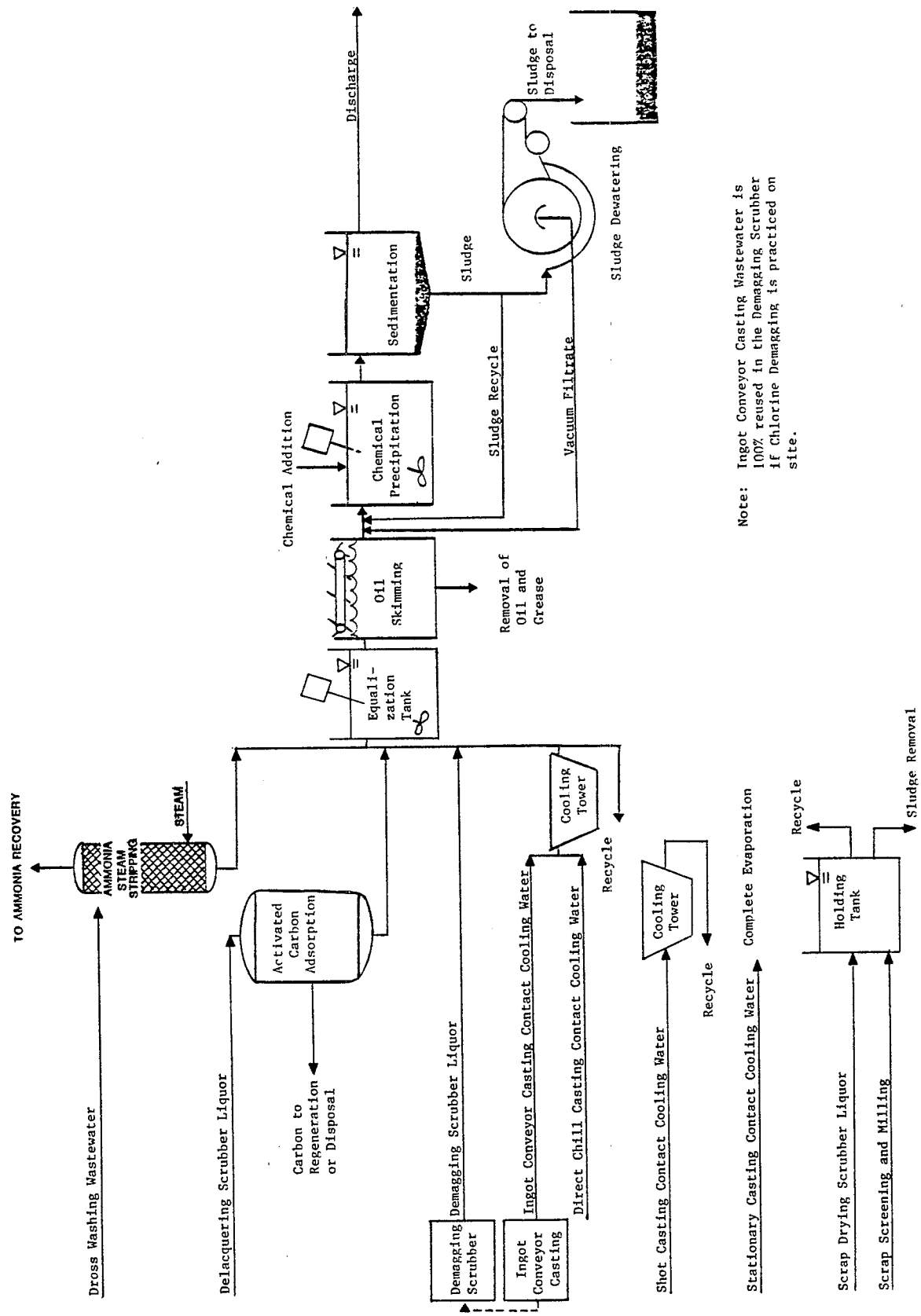

Note: Ingot Conveyor Casting Wastewater is 100% reused in the Demagging Scrubber if Chlorine Demagging is practiced on site.

Figure X-1

BAT TREATMENT SCHEME OPTION A
SECONDARY ALUMINUM SUBCATEGORY

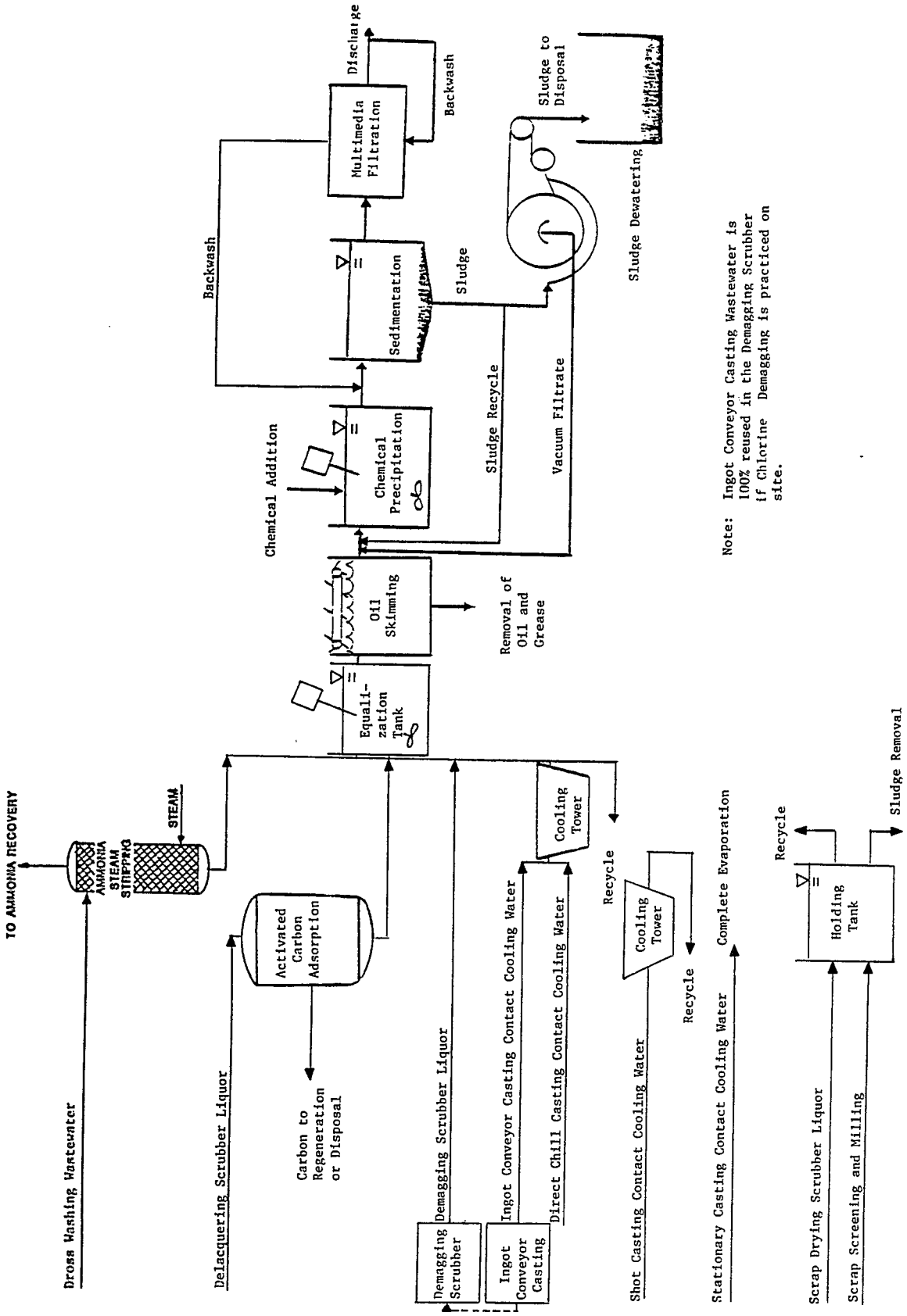

Figure X-2

BAT TREATMENT SCHEME OPTION C
SECONDARY ALUMINUM SUBCATEGORY

SECTION XI

NEW SOURCE PERFORMANCE STANDARDS

The basis for new source performance standards (NSPS) under Section 306 of the Act is the best available demonstrated technology (BDT). New plants have the opportunity to design the best and most efficient production processes and wastewater treatment technologies, without facing the added costs and restrictions encountered in retrofitting an existing plant. Therefore, Congress directed EPA to consider the best demonstrated process changes, in-plant controls, and end-of-pipe treatment technologies which reduce pollution to the maximum extent feasible.

This section describes the control technology for treatment of wastewater from new sources and presents mass discharge limitations of regulatory pollutants for NSPS in the secondary aluminum subcategory, based on the described control technology.

TECHNICAL APPROACH TO BDT

All of the treatment technology options applicable to a new source were previously considered for the BAT options. For this reason, two options were considered for BDT, all identical to the BAT options discussed in Section X. The treatment technologies used for the two BDT options are:

OPTION A

- Preliminary treatment with oil skimming (where required)
- Preliminary treatment of delacquering wet air pollution control wastewater with activated carbon adsorption
- In-process flow reduction of casting contact cooling water and scrubber liquor resulting from scrap drying and delacquering wet air pollution control
- Chemical precipitation and sedimentation

OPTION C

- Preliminary treatment with oil skimming (where required)
- Preliminary treatment of delacquering wet air pollution control wastewater with activated carbon adsorption
- In-process flow reduction of casting contact cooling water and scrubber liquor resulting from scrap drying and delacquering wet air pollution control
- Chemical precipitation and sedimentation
- Multimedia filtration

Partial or complete reuse and recycle of wastewater is an essential part of each option. Reuse and recycle can precede or follow end-of-pipe treatment. A more detailed discussion of these treatment options is presented in Section X.

BDT OPTION SELECTION

EPA promulgated the best available demonstrated technology for the secondary aluminum subcategory on April 8, 1974 as Subpart C of 40 CFR Part 421. The promulgated NSPS prohibits the discharge of process wastewater except for an allowance, if determined to be necessary, which allows the discharge of process wastewater from chlorine demagging. In this respect, promulgated NSPS was less stringent than promulgated BAT. The Agency did this recognizing that NSPS became effective on the date of promulgation and did not believe that the dry chlorine demagging processes were immediately available. The Agency believed that they were appropriate for BAT with its compliance date being 10 years later.

In February of 1983, EPA proposed to modify the promulgated NSPS to allow for a discharge from chlorine demagging and direct chill casting. The technology basis was identical to that of the proposed BAT treatment consisting of in-process flow reduction, preliminary treatment by oil skimming and ammonia steam stripping, lime precipitation, sedimentation, and filtration (Option C).

With the exception of dross washing, the modified NSPS promulgated for the secondary aluminum subcategory is equivalent to the BAT technology. Dross washing is not provided a discharge allowance in the NSPS due to the demonstration of dry milling in the subcategory. In the 1974 development document for secondary aluminum, it is stated that 17 of the 23 plants processing residues (drosses) practice dry milling to eliminate wastewater. Impact mills, grinders, and screening operations are used to remove the metallic aluminum values from the nonmetallic values. Dry milling is not required for existing sources due to the extensive retrofits of installing mills, grinders, and screening operations. New sources, however, have the ability to install the best equipment without the costs of major retrofits. Therefore, dry milling is considered appropriate for new sources. For the remaining waste streams, the Agency believes that BAT, as promulgated, is the best demonstrated technology. Additional flow reduction and more stringent treatment technologies are not demonstrated or readily transferable to the secondary aluminum subcategory.

REGULATED POLLUTANT PARAMETERS

The Agency has no reason to believe that the pollutants that will be found in treatable concentrations in processes within new sources will be any different than with existing sources. Accordingly, pollutants and pollutant parameters selected for limitation under NSPS, in accordance with the rationale of

Sections VI and X, are identical to those selected for BAT. The conventional pollutant parameters TSS, oil and grease, and pH are also selected for limitation.

NEW SOURCE PERFORMANCE STANDARDS

The NSPS discharge flows for each wastewater source are the same as the discharge rates for all the BAT options and are presented in Table XI-1 (page 1000). The mass of pollutant allowed to be discharged per mass of product is calculated by multiplying the appropriate achievable treatment concentration by the production normalized wastewater discharge flows (l/kkg). New source performance standards for the secondary aluminum subcategory waste streams are presented in Table XI-2 (page 1001).

Table XI-1

NSPS WASTEWATER DISCHARGE RATES FOR THE SECONDARY ALUMINUM SUBCATEGORY

Waste Stream	NSPS Normalized Discharge Rate l/kkg	NSPS Normalized Discharge Rate gal/ton	Production Normalizing Parameter
Scrap Drying Wet Air Pollution Control	0	0	kkg of aluminum scrap dried
Scrap Screening and Milling	0	0	kkg of aluminum scrap screened and milled
Dross Washing	0	0	kkg of dross washed
Demagging Wet Air Pollution Control	697	167	kkg of aluminum demagged
Delacquering Wet Air Pollution Control	80	19	kkg of aluminum delacquered
Direct Chill Casting Contact Cooling	1,329	319	kkg of aluminum cast
Ingot Conveyor Casting Contact Cooling (When Chlorine Demagging Wet Air Pollution Control is Not Practiced On-Site)	43	10	kkg of aluminum cast
Ingot Conveyor Casting Contact Cooling (When Chlorine Demagging Wet Air Pollution Control is Practiced On-Site)	0	0	kkg of aluminum cast
Stationary Casting Contact Cooling	0	0	kkg of aluminum cast
Shot Casting Contact Cooling	0	0	kkg of aluminum cast

TABLE XI-2

NSPS FOR THE SECONDARY ALUMINUM SUBCATEGORY

Scrap Drying Wet Air Pollution Control

Pollutant or Pollutant property	Maximum for any one day	Maximum for monthly average
Metric Units - mg/kg of aluminum scrap dried English Units - lbs/million lbs of aluminum scrap dried		
Cadmium	0.000	0.000
*Lead	0.000	0.000
*Zinc	0.000	0.000
*Aluminum	0.000	0.000
*Ammonia (as N)	0.000	0.000
*Oil and Grease	0.000	0.000
*TSS	0.000	0.000
*pH	Within the range of 7.0 to 10.0 at all times	

*Regulated Pollutant

Scrap Screening and Milling

Pollutant or Pollutant property	Maximum for any one day	Maximum for monthly average
Metric Units - mg/kg of aluminum screened and milled English Units - lbs/million lbs of aluminum screened and milled		
Cadmium	0.000	0.000
*Lead	0.000	0.000
*Zinc	0.000	0.000
*Aluminum	0.000	0.000
*Ammonia (as N)	0.000	0.000
*Oil and Grease	0.000	0.000
*TSS	0.000	0.000
*pH	Within the range of 7.0 to 10.0 at all times	

*Regulated Pollutant

TABLE XI-2 Continued)

NSPS FOR THE SECONDARY ALUMINUM SUBCATEGORY

Dross Washing

Pollutant or Pollutant property	Maximum for any one day	Maximum for monthly average
Metric Units - mg/kg of aluminum dross washed		
English Units - lbs/million lbs of aluminum dross washed		
Cadmium	0.000	0.000
*Lead	0.000	0.000
*Zinc	0.000	0.000
*Aluminum	0.000	0.000
*Ammonia (as N)	0.000	0.000
*Oil and Grease	0.000	0.000
*TSS	0.000	0.000
*pH	Within the range of 7.0 to 10.0 at all times	

*Regulated Pollutant

Demagging Wet Air Pollution Control

Pollutant or Pollutant property	Maximum for any one day	Maximum for monthly average
Metric Units - mg/kg of aluminum demagged		
English Units - lbs/million lbs of aluminum demagged		
Cadmium	0.139	0.056
*Lead	0.195	0.091
*Zinc	0.711	0.293
*Aluminum	4.250	1.889
*Ammonia (as N)	92.910	40.850
*Oil and Grease	6.970	6.970
*TSS	10.460	8.364
*pH	Within the range of 7.0 to 10.0 at all times	

*Regulated Pollutant

TABLE XI-2 Continued)

NSPS FOR THE SECONDARY ALUMINUM SUBCATEGORY

Delacquering Wet Air Pollution Control

Pollutant or Pollutant property	Maximum for any one day	Maximum for monthly average
Metric Units - mg/kg of aluminum delacquered		
English Units - lbs/million lbs of aluminum delacquered		
Cadmium	0.016	0.006
*Lead	0.022	0.010
*Zinc	0.082	0.034
*Aluminum	0.489	0.217
*Ammonia (as N)	10.670	4.688
*Total Phenols(4-AAP)	0.001	---
*Oil and Grease	0.800	0.800
*TSS	1.200	0.960
*pH	Within the range of 7.0 to 10.0 at all time	

*Regulated Pollutant
**At the source

Direct Chill Casting Contact Cooling

Pollutant or Pollutant property	Maximum for any one day	Maximum for monthly average
Metric Units - mg/kg of aluminum cast		
English Units - lbs/million lbs of aluminum cast		
Cadmium	0.266	0.106
*Lead	0.372	0.173
*Zinc	1.356	0.558
*Aluminum	8.120	3.602
*Ammonia (as N)	177.200	77.880
*Oil and Grease	13.290	13.290
*TSS	19.940	15.950
*pH	Within the range of 7.0 to 10.0 at all times	

*Regulated Pollutant

TABLE XI-2 Continued)

NSPS FOR THE SECONDARY ALUMINUM SUBCATEGORY

Ingot Conveyer Casting Contact Cooling (When Chlorine Demagging Wet Air Pollution Control is Not Practiced On-Site)

Pollutant or Pollutant property	Maximum for any one day	Maximum for monthly average
	Metric Units - mg/kg of aluminum cast English Units - lbs/million lbs of aluminum cast	
Cadmium	0.009	0.003
*Lead	0.012	0.006
*Zinc	0.044	0.018
*Aluminum	0.263	0.117
*Ammonia (as N)	5.732	2.520
*Oil and Grease	0.430	0.430
*TSS	0.645	0.516
*pH	Within the range of 7.0 to 10.0 at all times	

*Regulated Pollutant

Ingot Conveyer Casting Contact Cooling (When Chlorine Demagging Wet Air Pollution Control is Practiced On-Site)

Pollutant or Pollutant property	Maximum for any one day	Maximum for monthly average
	Metric Units - mg/kg of aluminum cast English Units - lbs/million lbs of aluminum cast	
Cadmium	0.000	0.000
*Lead	0.000	0.000
*Zinc	0.000	0.000
*Aluminum	0.000	0.000
*Ammonia (as N)	0.000	0.000
*Oil and Grease	0.000	0.000
*TSS	0.000	0.000
*pH	Within the range of 7.0 to 10.0 at all times	

*Regulated Pollutant

TABLE XI-2 Continued)

NSPS FOR THE SECONDARY ALUMINUM SUBCATEGORY

Stationary Casting Contact Cooling

Pollutant or Pollutant property	Maximum for any one day	Maximum for monthly average
Metric Units - mg/kg of aluminum cast English Units - lbs/million lbs of aluminum cast		
Cadmium	0.000	0.000
*Lead	0.000	0.000
*Zinc	0.000	0.000
*Aluminum	0.000	0.000
*Ammonia (as N)	0.000	0.000
*Oil and Grease	0.000	0.000
*TSS	0.000	0.000
*pH	Within the range of 7.0 to 10.0 at all times	

*Regulated Pollutant

Shot Casting Contact Cooling

Pollutant or Pollutant property	Maximum for any one day	Maximum for monthly average
Metric Units - mg/kg of aluminum cast English Units - lbs/million lbs of aluminum cast		
Cadmium	0.000	0.000
*Lead	0.000	0.000
*Zinc	0.000	0.000
*Aluminum	0.000	0.000
*Ammonia (as N)	0.000	0.000
*Oil and Grease	0.000	0.000
*TSS	0.000	0.000
*pH	Within the range of 7.0 to 10.0 at all times	

*Regulated Pollutant

THIS PAGE INTENTIONALLY LEFT BLANK

SECTION XII

PRETREATMENT STANDARDS

Section 307(b) of the Act requires EPA to promulgate pretreatment standards for existing sources (PSES), which must be achieved within three years of promulgation. PSES are designed to prevent the discharge of pollutants which pass through, interfere with, or are otherwise incompatible with the operation of publicly owned treatment works (POTW). The Clean Water Act of 1977 requires pretreatment for pollutants, such as heavy metals, that limit POTW sludge management alternatives. The existing PSES, promulgated in 1974, is based on oil skimming, pH adjustment, and ammonia air stripping technology.

Section 307(c) of the Act requires EPA to promulgate pretreatment standards for new sources (PSNS) at the same time that it promulgates NSPS. New indirect discharge facilities, like new direct discharge facilities, have the opportunity to incorporate the best available demonstrated technologies, including process changes, in-plant controls, and end-of-pipe treatment technologies, and to use plant site selection to ensure adequate treatment system installation. The existing PSNS is based on lime precipitation and sedimentation with in-process flow reduction.

Pretreatment standards for existing and new sources are to be technology based and analogous to the best available technology and the best demonstrated technology, respectively, for removal of toxic pollutants. For this reason, EPA is modifying the existing PSES and PSNS.

This section describes the control technology for pretreatment of process wastewaters from existing sources and new sources in the secondary aluminum subcategory. Pretreatment standards for regulated pollutants are presented based on the described control technology.

TECHNICAL APPROACH TO PRETREATMENT

Before promulgating pretreatment standards, the Agency examines whether the pollutants discharged by the subcategory pass through the POTW or interfere with the POTW operation or its chosen sludge disposal practices. In determining whether pollutants pass through a well-operated POTW, achieving secondary treatment, the Agency compares the percentage of a pollutant removed by POTW with the percentage removed by direct dischargers applying the best available technology economically achievable. A pollutant is deemed to pass through the POTW when the average percentage removed nationwide by well-operated POTW meeting secondary treatment requirements is less than the percentage removed by direct dischargers complying with BAT effluent limitations guidelines for that pollutant. (see generally, 46 FR at 9415-16,

January 28, 1981).

This definition of pass through satisfies two competing objectives set by Congress: (1) that standards for indirect dischargers be equivalent to standards for direct dischargers, while at the same time, (2) that the treatment capability and performance of the POTW be recognized and taken into account in regulating the discharge of pollutants from indirect dischargers. The Agency compares percentage removal rather than the mass or concentration of pollutants discharged because the latter would not take into account the mass of pollutants discharged to the POTW from non-industrial sources nor the dilution of the pollutants in the POTW effluent to lower concentrations due to the addition of large amounts of non-industrial wastewater.

PRETREATMENT STANDARDS FOR EXISTING AND NEW SOURCES

Options for pretreatment of wastewaters from both existing and new sources are based on increasing the effectiveness of end-of-pipe treatment technologies. All in-plant changes and applicable end-of-pipe treatment processes have been discussed previously in Sections X and XI. The options for PSNS and PSES, therefore, are the same as the BAT options discussed in Section X. Although oil and grease is a conventional pollutant compatible with treatment provided by POTW, oil skimming is needed for the PSNS treatment technology to ensure proper removal. Oil and grease interferes with the chemical addition and mixing required for chemical precipitation and treatment.

A description of each option is presented in Section X. Treatment technology options for the PSES and PSNS are:

OPTION A

- Preliminary treatment with oil skimming (where required)
- Preliminary treatment of dross washing wastewater with ammonia steam stripping
- Preliminary treatment of delacquering wet air pollution control wastewater with activated carbon adsorption
- In-process flow reduction of casting contact cooling water and scrubber liquor resulting from scrap drying and delacquering wet air pollution control
- Chemical precipitation and sedimentation

OPTION C

- Preliminary treatment with oil skimming (where required)
- Preliminary treatment of dross washing wastewater with ammonia steam stripping
- Preliminary treatment of delacquering wet air pollution control wastewater with activated carbon
- In-process flow reduction of casting contact cooling water and scrubber liquor resulting from scrap drying and delacquering wet air pollution control
- Chemical precipitation and sedimentation

- Multimedia filtration

INDUSTRY COST AND POLLUTANT REMOVAL ESTIMATES

The industry cost and environmental benefits of each treatment option were used to determine the most cost-effective option. The methodology applied in calculating pollutant removal estimates and plant compliance costs is discussed in Section X.

Table XII-1 (page 1011) shows the estimated pollutant removal estimates for indirect dischargers. Compliance costs are presented in Table VIII-2, (page 971).

PSES AND PSNS OPTION SELECTION

The technology basis for the promulgated PSES and PSNS is identical to BAT (Option C) and NSPS, respectively. The treatment scheme consists of in-process flow reduction, preliminary treatment with ammonia steam stripping, activated carbon adsorption, and oil skimming (where required), followed by lime precipitation, sedimentation, and filtration. EPA knows of no demonstrated technology that provides more efficient pollutant removal than BAT technology. No additional flow reduction for new sources is feasible because the only other available flow reduction technology, reverse osmosis (Option F) is not adequately demonstrated nor is it clearly transferable for this subcategory. Just as in the BAT effluent limitations, at-the-source monitoring and compliance is required for total phenolics in delacquering wet air pollution control wastewater.

The selected option for PSES increases the removal of approximately 11,300 kg/yr of toxic metals and 210 kg/yr of total phenolics over the estimated raw discharge. Estimated removal over the intermediate option considered is 11.6 kg/yr of toxic metals. The estimated capital cost of PSES is $2.3 million (1982 dollars) and the annual cost is $1.4 million (1982 dollars).

REGULATED POLLUTANT PARAMETERS

Pollutants selected for regulation under PSES and PSNS are identical to those selected for regulation for BAT. The conventional pollutants oil and grease, TSS, and pH are not limited under PSES and PSNS because they are effectively controlled by POTW. PSES and PSNS prevent the pass-through of lead, zinc, ammonia, and total phenols. The toxic pollutants are removed by well-operated POTW on an average of 53 percent (lead - 49 percent, zinc - 65 percent, phenol - 96 percent, and ammonia - 0 percent). Aluminum is not limited because in its hydroxide form it is used by POTW as a flocculant aid in the settling and removal of suspended solids. As such, aluminum in limited quantities does not pass through or interfere with POTW; rather it is a necessary aid to its operation.

PRETREATMENT STANDARDS

In proposing PSES and PSNS, the Agency considered whether to propose exclusively mass-based standards, or to allow a POTW the alternative of concentration or mass-based standards. Mass-based standards ensure that limitations are achieved by means of pollutant removal rather than by dilution. They are particularly important when a limitation is based upon flow reduction because pollutant limitations associated with the flow reduction cannot be measured any way but as a reduction of mass discharged. Mass-based standards, however, are harder to implement because a POTW faces increased difficulties in monitoring. A POTW also must develop specific limits for each plant based on the unit operations present and the production occurring in each operation.

EPA resolved these competing considerations by proposing mass-based standards exclusively where the PSES and PSNS treatment options include significant flow reductions or where significant pollutant removals are attributable to flow reductions. Flow reduction over current discharge rates was minimal (0.2 percent) in the secondary aluminum subcategory in the proposed standards. For secondary aluminum, EPA concluded that the proposed PSES should provide alternative mass-based and concentration-based standards.

The addition of ingot conveyer casting, however, now requires substantial flow reduction for the secondary aluminum subcategory. Recycle of ingot conveyer casting is based on 90 percent recycle when demagging scrubbers are not used and 100 percent reuse in demagging air pollution control when scrubbers are used. It is now estimated the PSES technology will reduce current flows by 25 percent. Consequently, concentration-based standards are not promulgated for this subcategory to ensure that flow reduction is achieved.

The PSES discharge flows are identical to the BAT discharge flows for all processes. These discharge flows are listed in Table XII-2, (page 1012) As shown in Table XII-3 (page 1014), the PSNS discharge flows are identical to the NSPS flows. The mass of pollutant allowed to be discharged per mass of product is calculated by multiplying the achievable treatment concentration (mg/l) by the normalized wastewater discharge flow (l/kkg). PSES and PSNS are shown in Tables XII-4 and XII-5, (pages 1016 and 1020) respectively.

Table XII-1

POLLUTANT REMOVAL ESTIMATES FOR THE SECONDARY ALUMINUM INDIRECT DISCHARGERS

POLLUTANT	TOTAL RAW WASTE (kg/yr)	OPTION A DISCHARGED (kg/yr)	OPTION A REMOVED (kg/yr)	OPTION C DISCHARGED (kg/yr)	OPTION C REMOVED (kg/yr)
Cadmium	9,920.4	5.4	9,915.0	3.4	9,917.0
Lead	542.5	8.2	534.3	5.5	537.1
Zinc	827.7	22.6	805.1	15.8	811.9
TOTAL TOXIC METALS	11,290.6	36.2	11,254.4	24.6	11,266.0
Phenolics (4-AAP)	212.5	0.7	211.8	0.7	211.8
Aluminum	129,548.2	153.4	129,394.8	102.0	129,446.1
Ammonia	2,286.9	2,191.4	95.5	2,191.4	95.5
TOTAL NONCONVENTIONALS	132,047.5	2,345.4	129,702.1	2,294.1	129,753.4
TSS	487,443.5	821.8	486,621.7	178.0	487,265.4
Oil & Grease	22,854.4	684.8	22,169.6	684.8	22,169.6
TOTAL CONVENTIONALS	510,297.8	1,506.6	508,791.3	862.8	509,435.0
TOTAL POLLUTANTS	653,635.9	3,888.2	649,747.7	3,181.5	650,454.4
FLOW (l/yr)		68,480,000		68,480,000	

NOTE: TOTAL TOXIC METALS = Cadmium + Lead + Zinc
TOTAL NONCONVENTIONALS = Aluminum + Ammonia + Phenolics
TOTAL CONVENTIONALS = TSS + Oil & Grease
TOTAL POLLUTANTS = Total Toxic Metals + Total Nonconventionals + Total Conventionals

OPTION A = Oil Skimming, Ammonia Steam Stripping, Activated Carbon Adsorption, In-process Flow Reduction, and Lime Precipitation and Sedimentation
OPTION C = Option A, plus Multimedia Filtration

Table XII-2

PSES WASTEWATER DISCHARGE RATES FOR THE SECONDARY ALUMINUM SUBCATEGORY

Waste Stream	PSES Normalized Discharge Rate l/kkg	gal/ton	Production Normalizing Parameter
Scrap Drying Wet Air Pollution Control	0	0	kkg of aluminum scrap dried
Scrap Screening and Milling	0	0	kkg of aluminum scrap screened and milled
Dross Washing	10,868	2,607	kkg of dross washed
Demagging Wet Air Pollution Control	697	167	kkg of aluminum demagged
Delacquering Wet Air Pollution Control	80	19	kkg of aluminum delacquered
Direct Chill Casting Contact Cooling	1,329	319	kkg of aluminum cast
Ingot Conveyor Casting Contact Cooling (When Chlorine Demagging Wet Air Pollution Control is Not Practiced On-Site)	43	10	kkg of aluminum cast
Ingot Conveyor Casting Contact Cooling (When Chlorine Demagging Wet Air Pollution Control is Practiced On-Site)	0	0	kkg of aluminum cast

Table XII-2 (Continued)

PSES WASTEWATER DISCHARGE RATES FOR THE SECONDARY ALUMINUM SUBCATEGORY

Waste Stream	PSES Normalized Discharge Rate l/kkg	gal/ton	Production Normalizing Parameter
Stationary Casting Contact Cooling	0	0	kkg of aluminum cast
Shot Casting Contact Cooling	0	0	kkg of aluminum cast

Table XII-3

PSNS WASTEWATER DISCHARGE RATES FOR THE SECONDARY ALUMINUM SUBCATEGORY

Waste Stream	PSNS Normalized Discharge Rate l/kkg	PSNS Normalized Discharge Rate gal/ton	Production Normalizing Parameter
Scrap Drying Wet Air Pollution Control	0	0	kkg of aluminum scrap dried
Scrap Screening and Milling	0	0	kkg of aluminum scrap screened and milled
Dross Washing	0	0	kkg of dross washed
Demagging Wet Air Pollution Control	697	167	kkg of aluminum demagged
Delacquering Wet Air Pollution Control	80	19	kkg of aluminum delacquered
Direct Chill Casting Contact Cooling	1,329	319	kkg of aluminum cast
Ingot Conveyor Casting Contact Cooling (When Chlorine Demagging Wet Air Pollution Control is Not Practiced On-Site)	43	10	kkg of aluminum cast
Ingot Conveyor Casting Contact Cooling (When Chlorine Demagging Wet Air Pollution Control is Practiced On-Site)	0	0	kkg of aluminum cast

Table XII-3 (Continued)

PSNS WASTEWATER DISCHARGE RATES FOR THE SECONDARY ALUMINUM SUBCATEGORY

Waste Stream	PSNS Normalized Discharge Rate l/kkg	gal/ton	Production Normalizing Parameter
Stationary Casting Contact Cooling	0	0	kkg of aluminum cast
Shot Casting Contact Cooling	0	0	kkg of aluminum cast

TABLE XII-4

PSES FOR THE SECONDARY ALUMINUM SUBCATEGORY

Scrap Drying Wet Air Pollution Control

Pollutant or Pollutant property	Maximum for any one day	Maximum for monthly average
Metric Units - mg/kg of aluminum scrap dried		
English Units - lbs/million lbs of aluminum scrap dried		
Cadmium	0.000	0.000
*Lead	0.000	0.000
*Zinc	0.000	0.000
*Ammonia (as N)	0.000	0.000

*Regulated Pollutant

Scrap Screening and Milling

Pollutant or Pollutant property	Maximum for any one day	Maximum for monthly average
Metric Units - mg/kg of aluminum delacquered		
English Units -lbs/million lbs of aluminum scrap screened & milled		
Cadmium	0.000	0.000
*Lead	0.000	0.000
*Zinc	0.000	0.000
*Ammonia (as N)	0.000	0.000

*Regulated Pollutant

Dross Washing

Pollutant or Pollutant property	Maximum for any one day	Maximum for monthly average
Metric Units - mg/kg of dross washed		
English Units - lbs/million lbs of dross washed		
Cadmium	2.174	0.869
*Lead	3.043	1.413
*Zinc	11.090	4.565
*Ammonia (as N)	1449.000	636.900

*Regulated Pollutant

TABLE XII-4 (Continued)

PSES FOR THE SECONDARY ALUMINUM SUBCATEGORY

Demagging Wet Air Pollution Control

Pollutant or Pollutant property	Maximum for any one day	Maximum for monthly average
Metric Units - mg/kg of aluminum demagged		
English Units - lbs/million lbs of aluminum demagged		
Cadmium	0.139	0.056
*Lead	0.195	0.091
*Zinc	0.711	0.293
*Ammonia (as N)	92.910	40.850

*Regulated Pollutant

Delacquering Wet Air Pollution Control

Pollutant or Pollutant property	Maximum for any one day	Maximum for monthly average
Metric Units - mg/kg of aluminum delacquered		
English Units - lbs/million lbs of aluminum delacquered		
Cadmium	0.016	0.006
*Lead	0.022	0.010
*Zinc	0.082	0.034
*Ammonia (as N)	10.670	4.688
*Total Phenols(4-AAP) **	0.001	---

*Regulated Pollutant
**At the source

Direct Chill Casting Contact Cooling

Pollutant or Pollutant property	Maximum for any one day	Maximum for monthly average
Metric Units - mg/kg of aluminum delacquered		
English Units - lbs/million lbs of aluminum delacquered		
Cadmium	0.266	0.106
*Lead	0.372	0.173
*Zinc	1.356	0.558
*Ammonia (as N)	177.200	77.880

*Regulated Pollutant

TABLE XII-4 (Continued)

PSES FOR THE SECONDARY ALUMINUM SUBCATEGORY

Ingot Conveyer Casting Contact Cooling (When Chlorine Demagging Wet Air Pollution Control is Not Practiced On-Site)

Pollutant or Pollutant property	Maximum for any one day	Maximum for monthly average
Metric Units - mg/kg of aluminum cast		
English Units - lbs/million lbs of aluminum cast		
Cadmium	0.009	0.003
*Lead	0.012	0.006
*Zinc	0.044	0.018
*Ammonia (as N)	5.732	2.520

*Regulated Pollutant

Ingot Conveyer Casting Contact Cooling (When Chlorine Demagging Wet Air Pollution Control is Practiced On-Site)

Pollutant or Pollutant property	Maximum for any one day	Maximum for monthly average
Metric Units - mg/kg of aluminum cast		
English Units - lbs/million lbs of aluminum cast		
Cadmium	0.000	0.000
*Lead	0.000	0.000
*Zinc	0.000	0.000
*Ammonia (as N)	0.000	0.000

*Regulated Pollutant

Stationary Casting Contact Cooling

Pollutant or. Pollutant property	Maximum for any one day	Maximum for monthly average
Metric Units - mg/kg of aluminum cast		
English Units - lbs/million lbs of aluminum cast		
Cadmium	0.000	0.000
*Lead	0.000	0.000
*Zinc	0.000	0.000
*Ammonia (as N)	0.000	0.000

*Regulated Pollutant

TABLE XII-4 (Continued)

PSES FOR THE SECONDARY ALUMINUM SUBCATEGORY

Shot Casting Contact Cooling

Pollutant or Pollutant property	Maximum for any one day	Maximum for monthly average
Metric Units - mg/kg of aluminum cast		
English Units - lbs/million lbs of aluminum cast		
Cadmium	0.000	0.000
*Lead	0.000	0.000
*Zinc	0.000	0.000
*Ammonia (as N)	0.000	0.000

*Regulated Pollutant

TABLE XII-5

PSNS FOR THE SECONDARY ALUMINUM SUBCATEGORY

Scrap Drying Wet Air Pollution Control

Pollutant or Pollutant property	Maximum for any one day	Maximum for monthly average
Metric Units - mg/kg of aluminum scrap dried		
English Units - lbs/million lbs of aluminum scrap dried		
Cadmium	0.000	0.000
*Lead	0.000	0.000
*Zinc	0.000	0.000
*Ammonia (as N)	0.000	0.000

*Regulated Pollutant

Scrap Screening and Milling

Pollutant or Pollutant property	Maximum for any one day	Maximum for monthly average
Metric Units - mg/kg of aluminum scrap screened & milled		
English Units-lbs/million lbs of aluminum scrap screened & milled		
Cadmium	0.000	0.000
*Lead	0.000	0.000
*Zinc	0.000	0.000
*Ammonia (as N)	0.000	0.000

*Regulated Pollutant

Dross Washing

Pollutant or Pollutant property	Maximum for any one day	Maximum for monthly average
Metric Units - mg/kg of dross washed		
English Units - lbs/million lbs of dross washed		
Cadmium	0.000	0.000
*Lead	0.000	0.000
*Zinc	0.000	0.000
*Ammonia (as N)	0.000	0.000

*Regulated Pollutant

TABLE XII-5 (Continued)

PSNS FOR THE SECONDARY ALUMINUM SUBCATEGORY

Demagging Wet Air Pollution Control

Pollutant or Pollutant property	Maximum for any one day	Maximum for monthly average
Metric Units - mg/kg of aluminum demagged		
English Units - lbs/million lbs of aluminum demagged		
Cadmium	0.139	0.056
*Lead	0.195	0.091
*Zinc	0.711	0.293
*Ammonia (as N)	92.910	40.850

*Regulated Pollutant

Delacquering Wet Air Pollution Control

Pollutant or Pollutant property	Maximum for any one day	Maximum for monthly average
Metric Units - mg/kg of aluminum delacquered		
English Units - lbs/million lbs of aluminum delacquered		
Cadmium	0.016	0.006
*Lead	0.022	0.010
*Zinc	0.082	0.034
*Ammonia (as N)	10.670	4.688
*Total Phenols(4-AAP) **	0.001	---

*Regulated Pollutant
**At the source

Direct Chill Casting Contact Cooling

Pollutant or Pollutant property	Maximum for any one day	Maximum for monthly average
Metric Units - mg/kg of aluminum cast		
English Units - lbs/million lbs of aluminum cast		
Cadmium	0.266	0.106
*Lead	0.372	0.173
*Zinc	1.356	0.588
*Ammonia (as N)	177.200	77.880

*Regulated Pollutant

TABLE XII-5 (Continued)

PSNS FOR THE SECONDARY ALUMINUM SUBCATEGORY

Ingot Conveyer Casting Contact Cooling (When Chlorine Demagging Wet Air Pollution is Not Practiced On-Site)

Pollutant or Pollutant property	Maximum for any one day	Maximum for monthly average
Metric Units - mg/kg of aluminum cast		
English Units - lbs/million lbs of aluminum cast		
Cadmium	0.009	0.003
*Lead	0.012	0.006
*Zinc	0.044	0.018
*Ammonia (as N)	5.732	2.520

*Regulated Pollutant

Ingot Conveyer Casting Contact Cooling (When Chlorine Demagging Wet Air Pollution Control is Practiced On-Site)

Pollutant or Pollutant property	Maximum for any one day	Maximum for monthly average
Metric Units - mg/kg of aluminum cast		
English Units - lbs/million lbs of aluminum cast		
Cadmium	0.000	0.000
*Lead	0.000	0.000
*Zinc	0.000	0.000
*Ammonia (as N)	0.000	0.000

*Regulated Pollutant

Stationary Casting Contact Cooling

Pollutant or Pollutant property	Maximum for any one day	Maximum for monthly average
Metric Units - mg/kg of aluminum cast		
English Units - lbs/million lbs of aluminum cast		
Cadmium	0.000	0.000
*Lead	0.000	0.000
*Zinc	0.000	0.000
*Ammonia (as N)	0.000	0.000

*Regulated Pollutant

TABLE XII-5 (Continued)

PSNS FOR THE SECONDARY ALUMINUM SUBCATEGORY

Shot Casting Contact Cooling

Pollutant or Pollutant property	Maximum for any one day	Maximum for monthly average
Metric Units - mg/kg of aluminum scrap dried		
English Units - lbs/million lbs of aluminum scrap dried		
Cadmium	0.000	0.000
*Lead	0.000	0.000
*Zinc	0.000	0.000
*Ammonia (as N)	0.000	0.000

*Regulated Pollutant

THIS PAGE INTENTIONALLY LEFT BLANK

SECTION XIII

BEST CONVENTIONAL POLLUTANT CONTROL TECHNOLOGY

EPA is not promulgating best conventional pollutant control technology (BCT) for the secondary aluminum subcategory at this time.

THIS PAGE INTENTIONALLY LEFT BLANK