United States
Environmental Protection
Agency

Office of Water Regulations
and Standards (WH-552)
Industrial Technology Division
Washington, DC 20460

EPA 440/1-89-019.9
May 1989

Office of Water

EPA

Development Document for Effluent Limitations Guidelines and Standards for the Nonferrous Metals Manufacturing Point Source Category

FINAL

Volume IX
Primary and Secondary Titanium
Primary Zirconium and Hafnium

Printed on Recycled Paper

ORGANIZATION OF THIS DOCUMENT

This development document for the nonferrous metals manufacturing category consists of a general development document which considers the general and overall aspects of the regulation and 31 subcategory specific supplements. These parts are organized into 10 volumes as listed below.

The information in the general document and in the supplements is organized by sections with the same type of information reported in the same section of each part. Hence to find information on any specific aspect of the category one would need only look in the same section of the general document and the specific supplements of interest.

The ten volumes contain contain the following subjects:

Volume I	General Development Document
Volume II	Bauxite Refining Primary Aluminum Smelting Secondary Aluminum Smelting
Volume III	Primary Copper Smelting Primary Electrolytic Copper Refining Secondary Copper Refining Metallurgical Acid Plants
Volume IV	Primary Zinc Primary Lead Secondary Lead Primary Antimony
Volume V	Primary Precious Metals and Mercury Secondary Precious Metals Secondary Silver Secondary Mercury
Volume VI	Primary Tungsten Secondary Tungsten and Cobalt Primary Molybdenum and Rhenium Secondary Molybdenum and Vanadium
Volume VII	Primary Beryllium Primary Nickel and Cobalt Secondary Nickel Secondary Tin
Volume VIII	Primary Columbium and Tantalum Secondary Tantalum Secondary Uranium
Volume IX	Primary and Secondary Titanium Primary Zirconium and Hafnium
Volume X	Primary and Secondary Germanium and Gallium Primary Rare Earth Metals Secondary Indium

DEVELOPMENT DOCUMENT

for

EFFLUENT LIMITATIONS GUIDELINES AND STANDARDS

for the

NONFERROUS METALS MANUFACTURING POINT SOURCE CATEGORY

VOLUME IX

Primary and Secondary Titanium
Primary Zirconium and Hafnium

William K. Reilly
Administrator

Rebecca Hanmer, Acting
Assistant Administrator for Water

Martha Prothro, Director
Office of Water Regulations and Standards

Thomas P. O'Farrell, Director
Industrial Technology Division

Ernst P. Hall, P.E., Chief
Metals Industry Branch
and
Technical Project Officer

May 1989

U.S. Environmental Protection Agency
Office of Water
Office of Water Regulations and Standards
Industrial Technology Division
Washington, D. C. 20460

TABLE OF CONTENTS

Supplement	Page
Primary and Secondary Titanium	4799
Primary Zirconium and Hafnium	5041

For detailed contents see detailed contents list in individual supplement.

NONFERROUS METALS MANUFACTURING POINT SOURCE CATEGORY

DEVELOPMENT DOCUMENT SUPPLEMENT

for the

Primary and Secondary Titanium Subcategory

William K. Reilly
Administrator

Rebecca Hanmer
Acting Assistant Administrator for Water

Martha Prothro, Director
Office of Water Regulations and Standards

Thomas P. O'Farrell, Director
Industrial Technology Division

Ernst P. Hall, P.E., Chief
Metals Industry Branch
and
Technical Project Officer

May 1989

U.S. Environmental Protection Agency
Office of Water
Office of Water Regulations and Standards
Industrial Technology Division
Washington, D. C. 20460

PRIMARY AND SECONDARY TITANIUM SUBCATEGORY

TABLE OF CONTENTS

Section		Page
I	SUMMARY	4811
II	CONCLUSIONS	4815
III	SUBCATEGORY PROFILE	4841
	Description of Titanium Production	4841
	Raw Materials	4841
	Chlorination of Rutile Ore	4841
	Reduction to Titanium Metal	4842
	Sponge Purification	4843
	Casting and Secondary Titanium Processing	4842
	Process Wastewater Sources	4844
	Other Wastewater Sources	4844
	Age, Production, and Process Profile	4844
IV	SUBCATEGORIZATION	4853
	Factors Considered in Subdividing the Primary and Secondary Titanium Subcategory	4853
	Other Factors	4854
	Production Normalizing Parameters	4855
V	WATER USE AND WASTEWATER CHARACTERISTICS	4857
	Wastewater Flow Rates	4858
	Wastewater Characteristics Data	4859
	Data Collection Portfolios	4859
	Field Sampling Data	4859
	Wastewater Characteristics and Flows by Subdivision	4861
	Chlorination Off-Gas Wet Air Pollution Control	4861
	Chlorination Area-Vent Wet Air Pollution Control	4861
	$TiCl_4$ Handling Wet Air Pollution Control	4861
	Reduction Area Wet Air Pollution Control	4862
	Melt Cell Wet Air Pollution Control	4862
	Chlorine Liquefaction Wet Air Pollution Control	4862
	Sodium Reduction Container Reconditioning Wash Water	4863
	Chip Crushing Wet Air Pollution Control	4863
	Acid Leachate and Rinse Water	4863
	Sponge Crushing and Screening Wet Air Pollution Control	4864
	Acid Pickle and Wash Water	4864
	Scrap Milling Wet Air Pollution Control	4864
	Scrap Detergent Wash Water	4864
	Casting Crucible Wash Water	4865
	Casting Contact Cooling Water	4865

TABLE OF CONTENTS (Continued)

Section		Page
VI	SELECTION OF POLLUTANT PARAMETERS	4929
	Conventional and Nonconventional Pollutant Parameters Selected	4929
	Toxic Priority Pollutants	4930
	Toxic Pollutants Never Detected	4930
	Toxic Pollutants Never Found Above Their Analytical Quantification Concentration	4930
	Toxic Pollutants Present Below Concentrations Achievable by Treatment	4931
	Toxic Pollutants Detected in a Small Number of Sources	4931
	Toxic Pollutants Selected for Further Consideration in Establishing Limitations and Standards	4934
VII	CONTROL AND TREATMENT TECHNOLOGIES	4943
	Current Control and Treatment Practices	4943
	Chlorination Off-Gas Wet Air Pollution Control	4943
	Chlorination Area-Vent Wet Air Pollution Control	4943
	$TiCl_4$ Handling Wet Air Pollution Control	4944
	Reduction Area Wet Air Pollution Control	4944
	Melt Cell Wet Air Pollution Control	4944
	Chlorine Liquefaction Wet Air Pollution Control	4944
	Sodium Reduction Container Reconditioning Wash Water	4945
	Chip Crushing Wet Air Pollution Control	4945
	Acid Leachate and Rinse Water	4945
	Sponge Crushing and Screening Wet Air Pollution Control	4945
	Acid Pickle and Wash Water	4945
	Scrap Milling Wet Air Pollution Control	4945
	Scrap Detergent Wash Water	4946
	Casting Crucible Wash Water	4946
	Casting Contact Cooling Water	4946
	Control and Treatment Options	4946
	Option A	4946
	Option B	4946
	Option C	4947

TABLE OF CONTENTS (Continued)

Section		Page
VIII	COSTS, ENERGY, AND NONWATER QUALITY ASPECTS	4949
	Treatment Options for Existing Sources	4949
	Option A	4949
	Option B	4949
	Option C	4949
	Cost Methodology	4950
	Nonwater Quality Aspects	4951
	Energy Requirements	4951
	Solid Waste	4951
	Air Pollution	4952
IX	BEST PRACTICABLE CONTROL TECHNOLOGY CURRENTLY AVAILABLE	4955
	Technical Approach to BPT	4955
	Industry Cost and Pollutant Removal Estimates	4957
	BPT Option Selection	4957
	Wastewater Discharge Rates	4958
	Chlorination Off-Gas Wet Air Pollution Control	4958
	Chlorination Area-Vent Wet Air Pollution Control	4958
	$TiCl_4$ Handling Wet Air Pollution Control	4959
	Reduction Area Wet Air Pollution Control	4959
	Melt Cell Wet Air Pollution Control	4959
	Chlorine Liquefaction Wet Air Pollution Control	4959
	Sodium Reduction Container Reconditioning Wash Water	4960
	Chip Crushing Wet Air Pollution Control	4960
	Acid Leachate and Rinse Water	4961
	Sponge Crushing and Screening Wet Air Pollution Control	4961
	Acid Pickle and Wash Water	4961
	Scrap Milling Wet Air Pollution Control	4961
	Scrap Detergent Wash Water	4961
	Casting Crucible Wash Water	4962
	Casting Contact Cooling Water	4962
	Regulated Pollutant Parameters	4962
	Effluent Limitations	4962

TABLE OF CONTENTS (Continued)

Section		Page
X	BEST AVAILABLE TECHNOLOGY ECONOMICALLY ACHIEVABLE	4975
	Technical Approach to BAT	4975
	Option A	4976
	Option B	4976
	Option C	4977
	Industry Cost and Pollutant Removal Estimates	4977
	Pollutant Removal Estimates	4978
	Compliance Costs	4978
	BAT Option Selection - Proposal	4979
	BAT Option Selection - Promulgation	4979
	Wastewater Discharge Rates	4980
	Reduction Area Wet Air Pollution Control	4980
	Melt Cell Wet Air Pollution Control	4980
	Chlorine Liquefaction Wet Air Pollution Control	4980
	Chip Crushing Wet Air Pollution Control	4981
	Sponge Crushing and Screening Wet Air Pollution Control	4981
	Scrap Milling Wet Air Pollution Control	4981
	Casting Contact Cooling Water	4981
	Regulated Pollutant Parameters	4981
	Effluent Limitations	4982
XI	NEW SOURCE PERFORMANCE STANDARDS	4999
	Technical Approach to NSPS	4999
	NSPS Option Selection - Proposal	5000
	NSPS Option Selection - Promulgation	5000
	Regulated Pollutant Parameters	5000
	New Source Performance Standards	5001

TABLE OF CONTENTS (Continued)

Section		Page
XII	PRETREATMENT STANDARDS	5013
	Technical Approach to Pretreatment	5013
	Industry Cost and Pollutant Removal Estimates	5014
	Pretreatment Standards for Existing and New Sources	5014
	PSES Option Selection - Proposal	5014
	PSES Option Selection - Promulgation	5015
	PSNS Option Selection - Proposal	5015
	PSNS Option Selection - Promulgation	5015
	Regulated Pollutant Parameters	5016
	Pretreatment Standards	5016
XIII	BEST CONVENTIONAL POLLUTANT CONTROL TECHNOLOGY	5039

PRIMARY AND SECONDARY TITANIUM SUBCATEGORY

LIST OF TABLES

Table	Title	Page
III-1	Initial Operating Year (Range) Summary of Plants in the Titanium Subcategory by Discharge Type	4846
III-2	Production Ranges for the Titanium Subcategory	4847
III-3	Summary of Titanium Subcategory Processes and Associated Waste Streams	4848
V-1	Water Use and Discharge Rates for Chlorination Off-Gas Wet Air Pollution Control	4866
V-2	Water Use and Discharge Rates for Chlorination Area-Vent Wet Air Pollution Control	4866
V-3	Water Use and Discharge Rates for $TiCl_4$ Handling Wet Air Pollution Control	4866
V-4	Water Use and Discharge Rates for Reduction Area Wet Air Pollution Control	4867
V-5	Water Use and Discharge Rates for Melt Cell Wet Air Pollution Control	4867
V-6	Water Use and Discharge Rates for Chlorine Liquefaction Wet Air Pollution Control	4868
V-7	Water Use and Discharge Rates for Sodium Reduction Container Reconditioning Wash Water	4868
V-8	Water Use and Discharge Rates for Chip Crushing Wet Air Pollution Control	4868
V-9	Water Use and Discharge Rates for Acid Leachate and Rinse Water	4849
V-10	Water Use and Discharge Rates for Sponge Crushing and Screening Wet Air Pollution Control	4869
V-11	Water Use and Discharge Rates for Acid Pickle and Wash Water	4870
V-12	Water Use and Discharge Rates for Scrap Milling Wet Air Pollution Control	4870

LIST OF TABLES (Continued)

Table	Title	Page
V-13	Water Use and Discharge Rates for Scrap Detergent Wash Water	4871
V-14	Water Use and Discharge Rates for Casting Crucible Wash Water	4871
V-15	Water Use and Discharge Rates for Casting Contact Cooling Water	4872
V-16	Titanium Sampling Data Reduction Area Wet Air Pollution Control Raw Wastewater	4873
V-17	Titanium Sampling Data Acid Leachate and Rinse Water Raw Wastewater	4883
V-18	Titanium Sampling Data Acid Leachate Raw Wastewater	4893
V-19	Titanium Sampling Data Leaching Rinse Water Raw Wastewater	4904
V-20	Titanium Sampling Data Treated Effluent	4915
V-21	Primary and Secondary Titanium Sampling Data Raw Wastewater Self-Sampling Program	4925
VI-1	Frequency of Occurrence of Priority Pollutants Primary and Secondary Titanium Raw Wastewater	4936
VI-2	Toxic Pollutants Never Detected	4940
VIII-1	Cost of Compliance for the Primary and Secondary Titanium Subcategory Direct Dischargers	4953
VIII-2	Cost of Compliance for the Primary and Secondary Titanium Subcategory Indirect Dischargers	4953
IX-1	BPT Wastewater Discharge Rates for the Primary and Secondary Titanium Subcategory	4963
IX-2	BPT Mass Limitations for the Primary and Secondary Titanium Subcategory	4965

LIST OF TABLES (Continued)

Table	Title	Page
X-1	Current Recycle Practices Within the Primary and Secondary Titanium Subcategory	4983
X-2	Pollutant Removal Estimates for Direct Dischargers in the Primary and Secondary Titanium Subcategory	4984
X-3	Cost of Compliance for the Primary and Secondary Titanium Subcategory Direct Dischargers	4985
X-4	BAT Wastewater Discharge Rates for the Primary and Secondary Titanium Subcategory	4986
X-5	BAT Mass Limitations for the Primary and Secondary Titanium Subcategory	4988
XI-1	NSPS Wastewater Discharge Rates for the Primary and Secondary Titanium Subcategory	5002
XI-2	NSPS for the Primary and Secondary Titanium Subcategory	5004
XII-1	Pollutant Removal Estimates for Indirect Dischargers in the Primary and Secondary Titanium Subcategory	5017
XII-2	Cost of Compliance for the Primary and Secondary Titanium Subcategory Indirect Dischargers	5018
XII-3	PSES Wastewater Discharge Rates for the Primary and Secondary Titanium Subcategory	5019
XII-4	PSNS Wastewater Discharge Rates for the Primary and Secondary Titanium Subcategory	5021
XII-5	PSES for the Primary and Secondary Titanium Subcategory	5023
XII-6	PSNS for the Primary and Secondary Titanium Subcategory	5031

LIST OF FIGURES

Figure	Title	Page
III-1	Titanium Production Process	4849
III-2	Geographic Locations of the Titanium Subcategory Plants	4851
V-1	Sampling Sites at Titanium Plant B	4927
V-2	Sampling Sites at Titanium Plant C	4928
IX-1	BPT Treatment Scheme for the Primary and Secondary Titanium Subcategory	4973
X-1	BAT Treatment Scheme for Option A	4996
X-2	BAT Treatment Scheme for Option B	4997
X-3	BAT Treatment Scheme for Option C	4998

THIS PAGE INTENTIONALLY LEFT BLANK

SECTION I

SUMMARY

This document provides the technical basis for promulgating effluent limitations based on best practicable technology (BPT) and best available technology (BAT) for existing direct dischargers, pretreatment standards for existing indirect dischargers (PSES), pretreatment standards for new indirect dischargers (PSNS), and standards of performance for new source direct dischargers (NSPS)

The primary and secondary titanium subcategory consists of eight plants. Of the plants, four discharge directly to rivers, lakes, or streams; two discharge to publicly owned treatment works (POTW); and two achieve zero discharge of process wastewater

EPA first studied the primary and secondary titanium subcategory to determine whether differences in raw materials, final products, manufacturing processes, equipment, age and size of plants, or water usage required the development of separate effluent limitations and standards for different segments of the subcategory. This involved a detailed analysis of wastewater discharge and treated effluent characteristics, including the sources and volume of water used, the processes used, the sources of pollutants and wastewaters in the plant, and the constituents of wastewaters, including toxic pollutants. As a result, fifteen subdivisions or building blocks have been identified for this subcategory that warrant separate effluent limitations These include:

(a) Chlorination off-gas wet air pollution control,
(b) Chlorination area-vent wet air pollution control,
(c) $TiCl_4$ handling wet air pollution control,
(d) Reduction area wet air pollution control,
(e) Melt cell wet air pollution control,
(f) Chlorine liquefaction wet air pollution control,
(g) Sodium reduction container reconditioning wash water,
(h) Chip crushing wet air pollution control,
(i) Acid leachate and rinse water,
(j) Sponge crushing and screening wet air pollution control,
(k) Acid pickle and wash water,
(l) Scrap milling wet air pollution control,
(m) Scrap detergent wash water,
(n) Casting crucible wash water, and
(o) Casting contact cooling water.

EPA also identified several distinct control and treatment technologies (both in-plant and end-of-pipe) applicable to the primary and secondary titanium subcategory. The Agency analyzed both historical and newly generated data on the performance of

these technologies, including their nonwater quality environmental impacts and air quality, solid waste generation, and energy requirements. EPA also studied various flow reduction techniques reported in the data collection portfolios (dcp) and plant visits.

Engineering costs were prepared for each of the control and treatment options considered for the subcategory. These costs were then used to estimate the impact of implementing the various options on the subcategory. For each control and treatment option that the Agency found to be most effective and technically feasible in controlling the discharge of pollutants, we estimated the number of potential closures, number of employees affected, and impact on price. These results are reported in a separate document entitled "The Economic Impact Analysis of Effluent Limitations and Standards for the Nonferrous Metals Manufacturing Industry."

After examining the various treatment technologies, the Agency identified BPT to represent the average of the best existing technology. The technology basis for the BPT limitations is chemical precipitation and sedimentation technology to remove metals and solids from combined wastewaters and to control pH, and oil skimming preliminary treatment for streams with treatable concentrations of oil and grease. EPA is not promulgating BPT limitations for titanium plants which do not practice electrolytic recovery of magnesium and which use vacuum distillation instead of leaching to purify titanium sponge. EPA is promulgating BPT limitations for all other titanium plants based on the selected treatment technology. To meet the BPT effluent limitations based on this technology, the primary and secondary titanium subcategory is expected to incur an estimated capital cost of $989,000 and an annual cost of $588,000.

EPA is not promulgating BAT limitations for titanium plants which do not practice electrolytic recovery of magnesium and which use vacuum distillation instead of leaching to purify titanium sponge. BAT limitations are promulgated for all other titanium plants based on chemical precipitation, sedimentation, and oil skimming pretreatment where required, (BPT technology) plus flow reduction, and filtration. The Agency considered applying the same technology levels to this entire subcategory but decided not to promulgate limitations for certain types of titanium facilities because there was little pollutant removal from the wastewater streams when treated by the BAT technology. The direct discharging primary and secondary titanium plants are estimated to incur a capital cost of $1,030,000, and an annualized cost of $585,000 to meet the BAT effluent limitations.

NSPS is equivalent to BAT with additional flow reduction based on dry scrubbing and by-product recovery. In selecting NSPS, EPA recognizes that new plants have the opportunity to implement the best and most efficient manufacturing processes and treatment technology. As such, the technology basis of BAT with additional

flow reduction based on dry scrubbing and by-product recovery has been determined as the best demonstrated technology.

The technology basis for PSES is equivalent to BAT. To meet the pretreatment standards for existing sources, the primary and secondary titanium subcategory is estimated to incur a capital and an annual cost. These compliance costs are not presented here because the data on which they are based have been claimed to be confidential. For PSNS, the Agency selected end-of-pipe treatment and in-process flow reduction control techniques equivalent to NSPS.

The best conventional technology (BCT) replaces BAT for the control of conventional pollutants. BCT is not being promulgated because the methodology for BCT has not yet been finalized.

The mass limitations and standards for BPT, BAT, NSPS, PSES, and PSNS are presented in Section II.

THIS PAGE INTENTIONALLY LEFT BLANK

SECTION II

CONCLUSIONS

1. EPA has divided the primary and secondary titanium subcategory into fifteen subdivisions for the purpose of effluent limitations and standards. These subdivisions are:

(a) Chlorination off-gas wet air pollution control,
(b) Chlorination area-vent wet air pollution control,
(c) $TiCl_4$ handling wet air pollution control,
(d) Reduction area wet air pollution control,
(e) Melt cell wet air pollution control,
(f) Chlorine liquefaction wet air pollution control,
(g) Sodium reduction container reconditioning wash water,
(h) Chip crushing wet air pollution control,
(i) Acid leachate and rinse water,
(j) Sponge crushing and screening wet air pollution control,
(k) Acid pickle and wash water,
(l) Scrap milling wet air pollution control,
(m) Scrap detergent wash water,
(n) Casting crucible wash water, and
(o) Casting contact cooling water.

BPT is promulgated based on the performance achievable by the application of oil skimming pretreatment for removal of oil and grease, followed by chemical precipitation and sedimentation (lime and settle) technology. EPA is promulgating these limitations for all titanium plants, except those plants which do not practice electrolytic recovery of magnesium and which use vacuum distillation instead of leaching to purify titanium sponge as the final product. For these excepted plants, no BPT limitations are promulgated. The following BPT limitations are promulgated:

(a) Chlorination Off-Gas Wet Air Pollution Control BPT

Pollutant or Pollutant Property	Maximum for Any One Day	Maximum for Monthly Average
	mg/kg (lb/million lbs) of $TiCl_4$ produced	
Chromium (total)	0.412	0.168
Lead	0.393	0.187
Nickel	1.797	1.189
Titanium	0.880	0.384
Oil and Grease	18.720	11.230
TSS	38.380	18.250
pH	Within the range of 7.5 to 10.0 at all times	

(b) Chlorination Area-Vent Wet Air Pollution Control BPT

Pollutant or Pollutant Property	Maximum for Any One Day	Maximum for Monthly Average
	mg/kg (lb/million lbs) of $TiCl_4$ produced	
Chromium (total)	0.458	0.187
Lead	0.437	0.208
Nickel	1.997	1.321
Titanium	0.978	0.426
Oil and Grease	20.800	12.480
TSS	42.640	20.280
pH	Within the range of 7.5 to 10.0 at all times	

(c) $TiCl_4$ Handling Wet Air Pollution Control BPT

Pollutant or Pollutant Property	Maximum for Any One Day	Maximum for Monthly Average
	mg/kg (lb/million lbs) of $TiCl_4$ handled	
Chromium (total)	0.082	0.034
Lead	0.079	0.037
Nickel	0.359	0.237
Titanium	0.176	0.077
Oil and Grease	3.740	2.244
TSS	7.667	3.647
pH	Within the range of 7.5 to 10.0 at all times	

(d) Reduction Area Wet Air Pollution Control BPT

Pollutant or Pollutant Property	Maximum for Any One Day	Maximum for Monthly Average
	mg/kg (lb/million lbs) of titanium produced	
Chromium (total)	18.170	7.435
Lead	17.350	8.261
Nickel	79.300	52.450
Titanium	38.820	16.930
Oil and Grease	826.100	495.600
TSS	1,693.000	805.400
pH	Within the range of 7.5 to 10.0 at all times	

(e) Melt Cell Wet Air Pollution Control BPT

Pollutant or Pollutant Property	Maximum for Any One Day	Maximum for Monthly Average
	mg/kg (lb/million lbs) of titanium produced	
Chromium (total)	9.352	3.826
Lead	8.927	4.251
Nickel	40.810	26.990
Titanium	19.980	8.714
Oil and Grease	425.100	255.000
TSS	871.400	414.500
pH	Within the range of 7.5 to 10.0 at all times	

(f) Chlorine Liquefaction Wet Air Pollution Control BPT

Pollutant or Pollutant Property	Maximum for Any One Day	Maximum for Monthly Average
	mg/kg (lb/million lbs) of titanium produced	
Chromium (total)	130.900	53.560
Lead	125.000	59.510
Nickel	571.300	377.900
Titanium	279.700	122.000
Oil and Grease	5,951.000	3,571.000
TSS	12,200.000	5,702.000
pH	Within the range of 7.5 to 10.0 at all times	

(g) Sodium Reduction Container Reconditioning Wash Water BPT

Pollutant or Pollutant Property	Maximum for Any One Day	Maximum for Monthly Average
	mg/kg (lb/million lbs) of titanium produced	
Chromium (total)	0.564	0.231
Lead	0.538	0.256
Nickel	2.461	1.628
Titanium	1.205	0.526
Oil and Grease	25.640	15.380
TSS	52.560	25.000
pH	Within the range of 7.5 to 10.0 at all times	

(h) Ship Crushing Wet Air Pollution Control BPT

Pollutant or Pollutant Property	Maximum for Any One Day	Maximum for Monthly Average
	mg/kg (lb/million lbs) of titanium produced	
Chromium (total)	10.090	4.126
Lead	9.627	4.584
Nickel	44.010	29.110
Titanium	21.550	9.398
Oil and Grease	458.400	275.100
TSS	939.800	447.000
pH	Within the range of 7.5 to 10.0 at all times	

(i) Acid Leachate and Rinse Water BPT

Pollutant or Pollutant Property	Maximum for Any One Day	Maximum for Monthly Average
	mg/kg (lb/million lbs) of titanium produced	
Chromium (total)	5.210	2.131
Lead	4.973	2.368
Nickel	22.730	15.040
Titanium	11.130	4.854
Oil and Grease	236.800	142.100
TSS	485.400	230.900
pH	Within the range of 7.5 to 10.0 at all times	

(j) Sponge Crushing and Screening Wet Air Pollution Control BPT

Pollutant or Pollutant Property	Maximum for Any One Day	Maximum for Monthly Average
	mg/kg (lb/million lbs) of titanium produced	
Chromium (total)	2.847	1.165
Lead	2.717	1.294
Nickel	12.420	8.217
Titanium	6.082	2.653
Oil and Grease	129.400	77.640
TSS	265.300	126.200
pH	Within the range of 7.5 to 10.0 at all times	

(k) Acid Pickle and Wash Water BPT

Pollutant or Pollutant Property	Maximum for Any One Day	Maximum for Monthly Average
	mg/kg (lb/million lbs) of titanium pickled	
Chromium (total)	0.027	0.011
Lead	0.026	0.012
Nickel	0.117	0.077
Titanium	0.057	0.025
Oil and Grease	1.220	0.732
TSS	2.501	1.190
pH	Within the range of 7.5 to 10.0 at all times	

l) Scrap Milling Wet Air Pollution Control BPT

Pollutant or Pollutant Property	Maximum for Any One Day	Maximum for Monthly Average
	mg/kg (lb/million lbs) of scrap milled	
Chromium (total)	0.995	0.407
Lead	0.950	0.452
Nickel	4.341	2.871
Titanium	2.125	0.927
Oil and Grease	45.220	27.130
TSS	92.700	44.090
pH	Within the range of 7.5 to 10.0 at all times	

(m) Scrap Detergent Wash Water BPT

Pollutant or Pollutant Property	Maximum for Any One Day	Maximum for Monthly Average
	mg/kg (lb/million lbs) of scrap washed	
Chromium (total)	7.948	3.252
Lead	7.587	3.613
Nickel	34.680	22.940
Titanium	16.980	7.406
Oil and Grease	361.300	216.800
TSS	740.600	352.300
pH	Within the range of 7.5 to 10.0 at all times	

(n) Casting Crucible Wash Water BPT

Pollutant or Pollutant Property	Maximum for Any One Day	Maximum for Monthly Average
	mg/kg (lb/million lbs) of titanium cast	
Chromium (total)	0.210	0.086
Lead	0.200	0.095
Nickel	0.916	0.606
Titanium	0.448	0.196
Oil and Grease	9.540	5.724
TSS	19.560	9.302
pH	Within the range of 7.5 to 10.0 at all times	

(o) Casting Contact Cooling Water BPT

Pollutant or Pollutant Property	Maximum for Any One Day	Maximum for Monthly Average
	mg/kg (lb/million lbs) of titanium cast	
Chromium (total)	321.100	131.400
Lead	306.500	145.900
Nickel	1,401.000	926.800
Titanium	685.900	299.200
Oil and Grease	14,590,000	8,757.000
TSS	29,920.000	14,230.000
pH	Within the range of 7.5 to 10.0 at all times	

EPA is not promulgating BAT limitations for titanium plants which do not practice electrolytic recovery of magnesium and which use vacuum distillation instead of leaching to purify titanium sponge. BAT limitations are promulgated for all other titanium plants based on oil skimming pretreatment, followed by chemical precipitation and sedimentation (lime and settle) technology, plus flow reduction and multimedia filtration. The following BAT effluent limitations are promulgated:

(a) Chlorination Off-Gas Wet Air Pollution Control BAT

Pollutant or Pollutant Property	Maximum for Any One Day	Maximum for Monthly Average
	mg/kg (lb/million lbs) of $TiCl_4$ produced	
Chromium (total)	0.346	0.140
Lead	0.262	0.122
Nickel	0.515	0.346
Titanium	0.496	0.215

(b) Chlorination Area-Vent Wet Air Pollution Control BAT

Pollutant or Pollutant Property	Maximum for Any One Day	Maximum for Monthly Average
	mg/kg (lb/million lbs) of $TiCl_4$ produced	
Chromium (total)	0.385	0.156
Lead	0.291	0.135
Nickel	0.572	0.385
Titanium	0.551	0.239

(c) $TiCl_4$ Handling Wet Air Pollution Control BAT

Pollutant or Pollutant Property	Maximum for Any One Day	Maximum for Monthly Average
	mg/kg (lb/million lbs) of $TiCl_4$ handled	
Chromium (total)	0.069	0.028
Lead	0.052	0.024
Nickel	0.103	0.069
Titanium	0.099	0.043

(d) Reduction Area Wet Air Pollution Control BAT

Pollutant or Pollutant Property	Maximum for Any One Day	Maximum for Monthly Average
	mg/kg (lb/million lbs) of titanium produced	
Chromium (total)	1.528	0.620
Lead	1.156	0.537
Nickel	2.272	1.528
Titanium	2.189	0.950

(e) Melt Cell Wet Air Pollution Control BAT

Pollutant or Pollutant Property	Maximum for Any One Day	Maximum for Monthly Average
	mg/kg (lb/million lbs) of titanium produced	
Chromium (total)	0.787	0.319
Lead	0.595	0.276
Nickel	1.169	0.787
Titanium	1.127	0.489

(f) Chlorine Liquefaction Wet Air Pollution Control BAT

Pollutant or Pollutant Property	Maximum for Any One Day	Maximum for Monthly Average
	mg/kg (lb/million lbs) of titanium produced	
Chromium (total)	11.010	4.463
Lead	8.332	3.868
Nickel	16.370	11.010
Titanium	15.770	6.844

(g) Sodium Reduction Container Reconditioning Wash Water BAT

Pollutant or Pollutant Property	Maximum for Any One Day	Maximum for Monthly Average
	mg/kg (lb/million lbs) of titanium produced	
Chromium (total)	0.474	0.192
Lead	0.359	0.167
Nickel	0.705	0.474
Titanium	0.679	0.295

(h) Chip Crushing Wet Air Pollution Control BAT

Pollutant or Pollutant Property	Maximum for Any One Day	Maximum for Monthly Average
	mg/kg (lb/million lbs) of titanium produced	
Chromium (total)	0.848	0.344
Lead	0.642	0.298
Nickel	1.261	0.848
Titanium	1.215	0.527

(i) Acid Leachate and Rinse Water BAT

Pollutant or Pollutant Property	Maximum for Any One Day	Maximum for Monthly Average
	mg/kg (lb/million lbs) of titanium produced	
Chromium (total)	4.381	1.776
Lead	3.315	1.539
Nickel	6.512	4.381
Titanium	6.275	2.723

(j) Sponge Crushing and Screening Wet Air Pollution Control BAT

Pollutant or Pollutant Property	Maximum for Any One Day	Maximum for Monthly Average
	mg/kg (lb/million lbs) of titanium produced	
Chromium (total)	0.239	0.097
Lead	0.181	0.084
Nickel	0.356	0.239
Titanium	0.343	0.149

(k) Acid Pickle and Wash Water BAT

Pollutant or Pollutant Property	Maximum for Any One Day	Maximum for Monthly Average
	mg/kg (lb/million lbs) of titanium pickled	
Chromium (total)	0.023	0.009
Lead	0.017	0.008
Nickel	0.034	0.023
Titanium	0.032	0.014

(l) Scrap Milling Wet Air Pollution Control BAT

Pollutant or Pollutant Property	Maximum for Any One Day	Maximum for Monthly Average
	mg/kg (lb/million lbs) of scrap milled	
Chromium (total)	0.084	0.034
Lead	0.064	0.030
Nickel	0.125	0.084
Titanium	0.120	0.052

(m) Scrap Detergent Wash Water BAT

Pollutant or Pollutant Property	Maximum for Any One Day	Maximum for Monthly Average
	mg/kg (lb/million lbs) of scrap washed	
Chromium (total)	6.684	2.710
Lead	5.058	2.348
Nickel	9.935	6.684
Titanium	9.574	4.155

(n) Casting Crucible Wash Water BAT

Pollutant or Pollutant Property	Maximum for Any One Day	Maximum for Monthly Average
	mg/kg (lb/million lbs) of titanium cast	
Chromium (total)	0.176	0.072
Lead	0.134	0.062
Nickel	0.262	0.176
Titanium	0.253	0.110

(o) Casting Contact Cooling Water BAT

Pollutant or Pollutant Property	Maximum for Any One Day	Maximum for Monthly Average
	mg/kg (lb/million lbs) of titanium cast	
Chromium (total)	27.000	10.950
Lead	20.430	9.486
Nickel	40.140	27.000
Titanium	38.680	16.780

4. EPA is not promulgating NSPS for titanium plants which do not practice electrolytic recovery of magnesium and which use vacuum distillation instead of leaching to purify titanium sponge. NSPS are promulgated for all other titanium plants based on oil skimming pretreatment, followed by chemical precipitation and sedimentation (lime and settle) technology, plus flow reduction, including zero discharge for four streams based on dry scrubbing and by-product recovery, and multimedia filtration at the end of the treatment scheme. The following effluent standards are promulgated for new sources:

(a) Chlorination Off-Gas Wet Air Pollution Control NSPS

Pollutant or Pollutant Property	Maximum for Any One Day	Maximum for Monthly Average
	mg/kg (lb/million lbs) of $TiCl_4$ produced	
Chromium (total)	0.346	0.140
Lead	0.262	0.122
Nickel	0.515	0.346
Titanium	0.496	0.215
Oil and Grease	9.360	9.360
TSS	14.040	11.230
pH	Within the range of 7.5 to 10.0 at all times	

(b) Chlorination Area-Vent Wet Air Pollution Control NSPS

Pollutant or Pollutant Property	Maximum for Any One Day	Maximum for Monthly Average
	mg/kg (lb/million lbs) of $TiCl_4$ produced	
Chromium (total)	0.385	0.156
Lead	0.291	0.135
Nickel	0.572	0.385
Titanium	0.551	0.239
Oil and Grease	10.400	10.400
TSS	15.600	12.480
pH	Within the range of 7.5 to 10.0 at all times	

(c) $TiCl_4$ Handling Wet Air Pollution Control NSPS

Pollutant or Pollutant Property	Maximum for Any One Day	Maximum for Monthly Average
	mg/kg (lb/million lbs) of $TiCl_4$ handled	
Chromium (total)	0.069	0.028
Lead	0.052	0.024
Nickel	0.103	0.069
Titanium	0.099	0.043
Oil and Grease	1.870	1.870
TSS	2.805	2.244
pH	Within the range of 7.5 to 10.0 at all times	

(d) Reduction Area Wet Air Pollution Control NSPS

Pollutant or Pollutant Property	Maximum for Any One Day	Maximum for Monthly Average
	mg/kg (lb/million lbs) of titanium produced	
Chromium (total)	1.528	0.620
Lead	1.156	0.537
Nickel	2.272	1.528
Titanium	2.189	0.950
Oil and Grease	41.300	41.300
TSS	61.950	49.560
pH	Within the range of 7.5 to 10.0 at all times	

(e) Melt Cell Wet Air Pollution Control NSPS

Pollutant or Pollutant Property	Maximum for Any One Day	Maximum for Monthly Average
	mg/kg (lb/million lbs) of titanium produced	
Chromium (total)	0.787	0.319
Lead	0.595	0.276
Nickel	1.169	0.787
Titanium	1.127	0.489
Oil and Grease	21.260	21.260
TSS	31.890	25.510
pH	Within the range of 7.5 to 10.0 at all times	

(f) Chlorine Liquefaction Wet Air Pollution Control NSPS

Pollutant or Pollutant Property	Maximum for Any One Day	Maximum for Monthly Average
	mg/kg (lb/million lbs) of titanium produced	
Chromium (total)	0.000	0.000
Lead	0.000	0.000
Nickel	0.000	0.000
Titanium	0.000	0.000
Oil and Grease	0.000	0.000
TSS	0.000	0.000
pH	Within the range of 7.5 to 10.0 at all times	

(g) Sodium Reduction Container Reconditioning Wash NSPS

Pollutant or Pollutant Property	Maximum for Any One Day	Maximum for Monthly Average
	mg/kg (lb/million lbs) of titanium produced	
Chromium (total)	0.474	0.192
Lead	0.359	0.167
Nickel	0.705	0.474
Titanium	0.679	0.295
Oil and Grease	12.820	12.820
TSS	19.230	15.380
pH	Within the range of 7.5 to 10.0 at all times	

(h) Chip Crushing Wet Air Pollution Control NSPS

Pollutant or Pollutant Property	Maximum for Any One Day	Maximum for Monthly Average
	mg/kg (lb/million lbs) of titanium produced	
Chromium (total)	0.000	0.000
Lead	0.000	0.000
Nickel	0.000	0.000
Titanium	0.000	0.000
Oil and Grease	0.000	0.000
TSS	0.000	0.000
pH	Within the range of 7.5 to 10.0 at all times	

(i) Acid Leachate and Rinse Water NSPS

Pollutant or Pollutant Property	Maximum for Any One Day	Maximum for Monthly Average
	mg/kg (lb/million lbs) of titanium produced	
Chromium (total)	4.381	1.776
Lead	3.315	1.539
Nickel	6.512	4.381
Titanium	6.275	2.723
Oil and Grease	118.400	118.400
TSS	177.600	142.100
pH	Within the range of 7.5 to 10.0 at all times	

(j) Sponge Crushing and Screening Wet Air Pollution Control NSPS

Pollutant or Pollutant Property	Maximum for Any One Day	Maximum for Monthly Average
	mg/kg (lb/million lbs) of titanium produced	
Chromium (total)	0.000	0.000
Lead	0.000	0.000
Nickel	0.000	0.000
Titanium	0.000	0.000
Oil and Grease	0.000	0.000
TSS	0.000	0.000
pH	Within the range of 7.5 to 10.0 at all times	

(k) Acid Pickle and Wash Water NSPS

Pollutant or Pollutant Property	Maximum for Any One Day	Maximum for Monthly Average
	mg/kg (lb/million lbs) of titanium pickled	
Chromium (total)	0.023	0.009
Lead	0.017	0.008
Nickel	0.034	0.023
Titanium	0.032	0.014
Oil and Grease	0.610	0.610
TSS	0.915	0.732
pH	Within the range of 7.5 to 10.0 at all times	

(l) Scrap Milling Wet Air Pollution Control

Pollutant or Pollutant Property	Maximum for Any One Day	Maximum for Monthly Average
	mg/kg (lb/million lbs) of scrap milled	
Chromium (total)	0.000	0.000
Lead	0.000	0.000
Nickel	0.000	0.000
Titanium	0.000	0.000
Oil and Grease	0.000	0.000
TSS	0.000	0.000
pH	Within the range of 7.5 to 10.0 at all times	

(m) Scrap Detergent Wash Water NSPS

Pollutant or Pollutant Property	Maximum for Any One Day	Maximum for Monthly Average
	mg/kg (lb/million lbs) of scrap washed	
Chromium (total)	6.684	2.710
Lead	5.058	2.348
Nickel	9.935	6.684
Titanium	9.574	4.155
Oil and Grease	180.600	180.600
TSS	271.000	216.800
pH	Within the range of 7.5 to 10.0 at all times	

(n) Casting Crucible Wash Water NSPS

Pollutant or Pollutant Property	Maximum for Any One Day	Maximum for Monthly Average
	mg/kg (lb/million lbs) of titanium cast	
Chromium (total)	0.176	0.072
Lead	0.134	0.062
Nickel	0.262	0.176
Titanium	0.253	0.110
Oil and Grease	4.770	4.770
TSS	7.155	5.724
pH	Within the range of 7.5 to 10.0 at all times	

(o) Casting Contact Cooling Water NSPS

Pollutant or Pollutant Property	Maximum for Any One Day	Maximum for Monthly Average
	mg/kg (lb/million lbs) of titanium cast	
Chromium (total)	27.000	10.950
Lead	20.430	9.486
Nickel	40.140	27.000
Titanium	38.680	16.780
Oil and Grease	729.700	729.700
TSS	1,095.000	875.700
pH	Within the range of 7.5 to 10.0 at all times	

EPA is not promulgating PSES for titanium plants which do not practice electrolytic recovery of magnesium and which use vacuum distillation instead of leaching to purify titanium sponge. PSES are promulgated for all other titanium plants based on oil skimming pretreatment, followed by chemical precipitation and sedimentation (lime and settle) technology, plus flow reduction and multimedia filtration. The following pretreatment standards are promulgated for existing sources:

(a) Chlorination Off-Gas Wet Air Pollution Control PSES

Pollutant or Pollutant Property	Maximum for Any One Day	Maximum for Monthly Average
	mg/kg (lb/million lbs) of $TiCl_4$ produced	
Chromium (total)	0.346	0.140
Lead	0.262	0.122
Nickel	0.515	0.346
Titanium	0.496	0.215

(b) Chlorination Area-Vent Wet Air Pollution Control PSES

Pollutant or Pollutant Property	Maximum for Any One Day	Maximum for Monthly Average
	mg/kg (lb/million lbs) of $TiCl_4$ produced	
Chromium (total)	0.385	0.156
Lead	0.291	0.135
Nickel	0.572	0.385
Titanium	0.551	0.239

(c) $TiCl_4$ Handling Wet Air Pollution Control PSES

Pollutant or Pollutant Property	Maximum for Any One Day	Maximum for Monthly Average
	mg/kg (lb/million lbs) of $TiCl_4$ handled	
Chromium (total)	0.069	0.028
Lead	0.052	0.024
Nickel	0.103	0.069
Titanium	0.099	0.043

(d) Reduction Area Wet Air Pollution Control PSES

Pollutant or Pollutant Property	Maximum for Any One Day	Maximum for Monthly Average
	mg/kg (lb/million lbs) of titanium produced	
Chromium (total)	1.528	0.620
Lead	1.156	0.537
Nickel	2.272	1.528
Titanium	2.189	0.950

(e) Melt Cell Wet Air Pollution Control PSES

Pollutant or Pollutant Property	Maximum for Any One Day	Maximum for Monthly Average
	mg/kg (lb/million lbs) of titanium produced	
Chromium (total)	0.787	0.319
Lead	0.595	0.276
Nickel	1.169	0.787
Titanium	1.127	0.489

(f) Chlorine Liquefaction Wet Air Pollution Control PSES

Pollutant or Pollutant Property	Maximum for Any One Day	Maximum for Monthly Average
	mg/kg (lb/million lbs) of titanium produced	
Chromium (total)	11.010	4.463
Lead	8.332	3.868
Nickel	16.370	11.010
Titanium	15.770	6.844

(g) Sodium Reduction Container Reconditioning Wash Water PSES

Pollutant or Pollutant Property	Maximum for Any One Day	Maximum for Monthly Average
	mg/kg (lb/million lbs) of titanium produced	
Chromium (total)	0.474	0.192
Lead	0.359	0.167
Nickel	0.705	0.474
Titanium	0.679	0.295

(h) Chip Crushing Wet Air Pollution Control PSES

Pollutant or Pollutant Property	Maximum for Any One Day	Maximum for Monthly Average
	mg/kg (lb/million lbs) of titanium produced	
Chromium (total)	0.848	0.344
Lead	0.642	0.298
Nickel	1.261	0.848
Titanium	1.215	0.527

(i) Acid Leachate and Rinse Water PSES

Pollutant or Pollutant Property	Maximum for Any One Day	Maximum for Monthly Average
	mg/kg (lb/million lbs) of titanium produced	
Chromium (total)	4.381	1.776
Lead	3.315	1.539
Nickel	6.512	4.381
Titanium	6.275	2.723

(j) Sponge Crushing and Screening Wet Air Pollution Control PSES

Pollutant or Pollutant Property	Maximum for Any One Day	Maximum for Monthly Average
	mg/kg (lb/million lbs) of titanium produced	
Chromium (total)	0.239	0.097
Lead	0.181	0.084
Nickel	0.356	0.239
Titanium	0.343	0.149

(k) Acid Pickle and Wash Water PSES

Pollutant or Pollutant Property	Maximum for Any One Day	Maximum for Monthly Average
	mg/kg (lb/million lbs) of titanium pickled	
Chromium (total)	0.023	0.009
Lead	0.017	0.008
Nickel	0.034	0.023
Titanium	0.032	0.014

(l) Scrap Milling Wet Air Pollution Control PSES

Pollutant or Pollutant Property	Maximum for Any One Day	Maximum for Monthly Average
	mg/kg (lb/million lbs) of scrap milled	
Chromium (total)	0.084	0.034
Lead	0.064	0.030
Nickel	0.125	0.084
Titanium	0.120	0.052

(m) Scrap Detergent Wash Water PSES

Pollutant or Pollutant Property	Maximum for Any One Day	Maximum for Monthly Average
	mg/kg (lb/million lbs) of scrap washed	
Chromium (total)	6.684	2.710
Lead	5.058	2.348
Nickel	9.935	6.684
Titanium	9.574	4.155

(n) Casting Crucible Wash Water PSES

Pollutant or Pollutant Property	Maximum for Any One Day	Maximum for Monthly Average
	mg/kg (lb/million lbs) of titanium cast	
Chromium (total)	0.176	0.072
Lead	0.134	0.062
Nickel	0.262	0.176
Titanium	0.253	0.110

(o) Casting Contact Cooling Water PSES

Pollutant or Pollutant Property	Maximum for Any One Day	Maximum for Monthly Average
	mg/kg (lb/million lbs) of titanium cast	
Chromium (total)	27.000	10.950
Lead	20.430	9.486
Nickel	40.140	27.000
Titanium	38.680	16.780

EPA is not promulgating PSNS for titanium plants which do not practice electrolytic recovery of magnesium and which use vacuum distillation instead of leaching to purify titanium sponge. PSNS are promulgated for all other titanium plants based on oil skimming pretreatment, followed by chemical precipitation and sedimentation (lime and settle) technology, plus flow reduction, including zero discharge for four streams based on dry scrubbing and by-product recovery, and multimedia filtration at the end of the treatment scheme. The following pretreatment standards are promulgated for new sources:

(a) Chlorination Off-Gas Wet Air Pollution Control PSNS

Pollutant or Pollutant Property	Maximum for Any One Day	Maximum for Monthly Average
	mg/kg (lb/million lbs) of $TiCl_4$ produced	
Chromium (total)	0.346	0.140
Lead	0.262	0.122
Nickel	0.515	0.346
Titanium	0.496	0.215

(b) Chlorination Area-Vent Wet Air Pollution Control PSNS

Pollutant or Pollutant Property	Maximum for Any One Day	Maximum for Monthly Average
	mg/kg (lb/million lbs) of $TiCl_4$ produced	
Chromium (total)	0.385	0.156
Lead	0.291	0.135
Nickel	0.572	0.385
Titanium	0.551	0.239

(c) $TiCl_4$ Handling Wet Air Pollution Control PSNS

Pollutant or Pollutant Property	Maximum for Any One Day	Maximum for Monthly Average
mg/kg (lb/million lbs) of $TiCl_4$ handled		
Chromium (total)	0.069	0.028
Lead	0.052	0.024
Nickel	0.103	0.069
Titanium	0.099	0.043

(d) Reduction Area Wet Air Pollution Control PSNS

Pollutant or Pollutant Property	Maximum for Any One Day	Maximum for Monthly Average
	mg/kg (lb/million lbs) of titanium produced	
Chromium (total)	1.528	0.620
Lead	1.156	0.537
Nickel	2.272	1.528
Titanium	2.189	0.950

(e) Melt Cell Wet Air Pollution Control PSNS

Pollutant or Pollutant Property	Maximum for Any One Day	Maximum for Monthly Average
	mg/kg (lb/million lbs) of titanium produced	
Chromium (total)	0.787	0.319
Lead	0.595	0.276
Nickel	1.169	0.787
Titanium	1.127	0.489

(f) Chlorine Liquefaction Wet Air Pollution Control PSNS

Pollutant or Pollutant Property	Maximum for Any One Day	Maximum for Monthly Average
	mg/kg (lb/million lbs) of titanium produced	
Chromium (total)	0.000	0.000
Lead	0.000	0.000
Nickel	0.000	0.000
Titanium	0.000	0.000

(g) Sodium Reduction Container Reconditioning Wash Water PSNS

Pollutant or Pollutant Property	Maximum for Any One Day	Maximum for Monthly Average
	mg/kg (lb/million lbs) of titanium produced	
Chromium (total)	0.474	0.192
Lead	0.359	0.167
Nickel	0.705	0.474
Titanium	0.679	0.295

(h) Chip Crushing Wet Air Pollution Control PSNS

Pollutant or Pollutant Property	Maximum for Any One Day	Maximum for Monthly Average
	mg/kg (lb/million lbs) of titanium produced	
Chromium (total)	0.000	0.000
Lead	0.000	0.000
Nickel	0.000	0.000
Titanium	0.000	0.000

(i) Acid Leachate and Rinse Water PSNS

Pollutant or Pollutant Property	Maximum for Any One Day	Maximum for Monthly Average
	mg/kg (lb/million lbs) of titanium produced	
Chromium (total)	4.381	1.776
Lead	3.315	1.539
Nickel	6.512	4.381
Titanium	6.275	2.723

(j) Sponge Crushing and Screening Wet Air Pollution Control PSNS

Pollutant or Pollutant Property	Maximum for Any One Day	Maximum for Monthly Average
mg/kg (lb/million lbs) of titanium produced		
Chromium (total)	0.000	0.000
Lead	0.000	0.000
Nickel	0.000	0.000
Titanium	0.000	0.000

(k) Acid Pickle and Wash Water PSNS

Pollutant or Pollutant Property	Maximum for Any One Day	Maximum for Monthly Average
mg/kg (lb/million lbs) of titanium pickled		
Chromium (total)	0.023	0.009
Lead	0.017	0.008
Nickel	0.034	0.023
Titanium	0.032	0.014

(l) Scrap Milling Wet Air Pollution Control PSNS

Pollutant or Pollutant Property	Maximum for Any One Day	Maximum for Monthly Average
mg/kg (lb/million lbs) of scrap milled		
Chromium (total)	0.000	0.000
Lead	0.000	0.000
Nickel	0.000	0.000
Titanium	0.000	0.000

(m) Scrap Detergent Wash Water PSNS

Pollutant or Pollutant Property	Maximum for Any One Day	Maximum for Monthly Average
	mg/kg (lb/million lbs) of scrap washed	
Chromium (total)	6.684	2.710
Lead	5.058	2.348
Nickel	9.935	6.684
Titanium	9.574	4.155

(n) Casting Crucible Wash Water PSNS

Pollutant or Pollutant Property	Maximum for Any One Day	Maximum for Monthly Average
	mg/kg (lb/million lbs) of titanium cast	
Chromium (total)	0.176	0.072
Lead	0.134	0.062
Nickel	0.262	0.176
Titanium	0.253	0.110

(o) Casting Contact Cooling Water PSNS

Pollutant or Pollutant Property	Maximum for Any One Day	Maximum for Monthly Average
	mg/kg (lb/million lbs) of titanium cast	
Chromium (total)	27.000	10.950
Lead	20.430	9.486
Nickel	40.140	27.000
Titanium	38.680	16.780

EPA is not promulgating best conventional pollutant control technology (BCT) for the primary and secondary titanium subcategory at this time.

SECTION III

SUBCATEGORY PROFILE

This section of the primary and secondary titanium supplement describes the raw materials and processes used in producing titanium and presents a profile of the titanium plants identified in this study.

The largest use of titanium is for compressor blades, rotors, and other parts for aircraft gas turbine engines. The second largest use is in airframe structures of both military and commercial aircraft. The most rapid growth in titanium use has been for industrial applications, such as heat exchangers and chemical industry equipment, where the metal's superior resistance to heat and corrosion is required.

DESCRIPTION OF TITANIUM PRODUCTION

The production processes used at titanium manufacturing plants depend largely on the raw materials used and the final products produced. Four major operations may be performed:

1. Chlorination of rutile ore,
2. Reduction to titanium sponge,
3. Titanium sponge purification, and
4. Casting and secondary titanium processing.

Some plants perform all four operations. Other plants begin with titanium tetrachloride and perform only the last three. Also, some plants sell the titanium sponge product without continuing to the casting operation. One plant carburizes rutile ore in a dry process to produce titanium carbide. Production processes for the titanium subcategory are presented schematically in Figure III-1 (page 4849) and described in detail below.

RAW MATERIALS

The major raw material used in titanium production is rutile ore which is approximately 95 percent TiO_2. This ore is mined predominantly from deposits on Australia's east coast. Rutile ore is converted by direct chlorination to titanium tetrachloride, a process intermediate which can be purchased for use as a raw material, and then reduced to titanium metal sponge. Scrap titanium in the form of chips, massive scrap, or millings may be blended with the titanium sponge and alloys before casting into ingots or bars.

CHLORINATION OF RUTILE ORE

Titanium tetrachloride, $TiCl_4$, is produced by the

chlorination of rutile ore and coke in a fluidized bed reactor. The $TiCl_4$, which is a liquid at ambient temperature and pressure, is condensed from the reaction gas and purified by distillation.

Water wash towers are used to cleanse off-gases from the condensers. The scrubbed gas then passes through a caustic tower and a Venturi scrubber. The gas stream leaving the Venturi scrubber may be released to the atmosphere or it may pass through another set of three scrubbers which also cleanse the chlorination area-vent gases. Each of these wet air pollution control devices is a source of wastewater.

REDUCTION TO TITANIUM METAL

Titanium tetrachloride is reduced to titanium metal at four plants by the Kroll process. This batch process employs magnesium as the reducing agent in an inert atmosphere. The $TiCl_4$ is added to magnesium in a retort furnace where it is converted to titanium metal and magnesium chloride. Molten magnesium chloride is tapped off as it is formed, and periodic vent taps are made during the reduction process to remove chloride vapors. The wet scrubbers used to cleanse these vapors are a source of wastewater for this process.

In one plant, during periods of rapid reduction, excess $MgCl_2$ is collected in a melt cell before it is transferred to electrolytic cells for recovery. Vapors generated by the molten magnesium chloride may be controlled by wet scrubbers resulting in a wastewater stream.

The titanium sponge produced by reduction is refined by distillation to remove magnesium and magnesium chloride contaminants. The Mg and $MgCl_2$ may be condensed and recycled to the reduction operation without producing any waste streams or may be recovered electrolytically.

In the electrolytic recovery process, molten $MgCl_2$ is transferred to an electrolytic cell where it is separated into its constituent elements. The magnesium floats to the top of the cells and is collected for sale or reuse in the reduction furnaces.

The chlorine gas formed during magnesium recovery is passed through a bag filter. The filtered gas is then recycled to the chlorination or reduction processes or is liquefied and sold as liquid chlorine. Some air escapes from the gas during liquefaction and although its volume is small, it is saturated with chlorine and must be treated before venting to the atmosphere. Burners may be used to convert the escaping chlorine to HCl vapors which are then scrubbed with water. This wet air pollution control represents a wastewater source.

An alternative to the Kroll process is the Hunter process in which $TiCl_4$ is reduced to titanium metal by sodium in an

inert atmosphere. While the sodium reduction process is frequently used to produce titanium sponge in both Japan and England, only one plant in the United States employs this method. No wet air pollution controls are reportedly associated with the reduction of $TiCl_4$ at that plant, and sodium recovery from spent leach liquor is performed off-site. Thus, there are no reported wastewater sources from the sodium reduction process.

After the reduction of $TiCl_4$ to titanium metal by magnesium or sodium, the titanium product is chipped out of the reaction container and crushed before further processing. The wet dust control scrubber for the crushing operation is a source of wastewater. If the empty container is cleaned and returned to the reduction facility for reuse, a wash water waste stream is generated.

One plant reports the production of titanium sponge by reducing rutile ore with calcium hydride (CaH_2) in a hydrogen atmosphere without forming the chlorinated intermediate. No wastewater sources were reported for this reduction process.

SPONGE PURIFICATION

Remaining impurities, such as magnesium and chlorides of magnesium and sodium, are removed from the titanium by leaching or by vacuum distillation. In the first method, crushed titanium chips are leached with nitric or hydrochloric acid and then rinsed with water. Both the spent leachate and the rinse water are wastewater streams. In the second method, impurities are vacuum-distilled from the crushed titanium chips with no wastewater generation.

The purified metal may be sold as titanium sponge, crushed and sold as titanium powder, or further processed by alloying and casting. Wet scrubbers control dust from the crushing operation and represent a wastewater source.

CASTING AND SECONDARY TITANIUM PROCESSING

Titanium scrap may be blended with leached titanium sponge and alloying metals before being melted and formed into ingots. Massive scrap, including titanium plate and sheet metal, is pickled with a mixture of hydrochloric, hydrofluoric, and nitric acids before alloying, creating an acidic waste stream of the pickle liquor and wash water. Titanium scrap chips and millings are crushed and then washed with a detergent solution to remove oil and dirt contaminants before alloying. Wastewater sources from these processes include the dust scrubber for the scrap milling operation and the detergent wash water.

The blended titanium and alloying metals are melted and cast as titanium ingots. The wastewater flow associated with the melt shop is an oily stream from the washing of melt crucibles.

PROCESS WASTEWATER SOURCES

A variety of processes are involved in primary and secondary titanium production. The significant wastewater sources that are associated with this subcategory can be subdivided as follows:

1. Chlorination off-gas wet air pollution control,
2. Chlorination area-vent wet air pollution control,
3. $TiCl_4$ handling wet air pollution control,
4. Reduction area wet air pollution control,
5. Melt cell wet air pollution control,
6. Chlorine liquefaction wet air pollution control,
7. Sodium reduction container reconditioning wash water,
8. Chip crushing wet air pollution control,
9. Acid leachate and rinse water,
10. Sponge crushing and screening wet air pollution control,
11. Acid pickle and wash water,
12. Scrap milling wet air pollution control,
13. Scrap detergent wash water,
14. Casting crucible wash water, and
15. Casting contact cooling water.

The sources of these wastewater streams are identified by their respective numbers in Figure III-1 (page 4849).

OTHER WASTEWATER SOURCES

There may be other wastewater streams associated with the primary and secondary titanium subcategory. These streams may include stormwater runoff, maintenance and cleanup water. These wastewaters are not considered as a part of this rulemaking. EPA believes that the flows and pollutant loadings associated with these waste streams are insignificant relative to the wastewater streams selected and are best handled by the appropriate permit authority on a case-by-case basis under authority of Section 403 of the Clean Water Act.

AGE, PRODUCTION, AND PROCESS PROFILE

Figure III-2 (page 4851) shows the location of the eight titanium plants operating in the United States. This figure shows that most of the titanium plants are located in the Western and Northeastern states.

Table III-1 (page 4846) summarizes the relative age and discharge status of the eight titanium plants. Three plants began nonferrous manufacturing operations within a few years of 1940, three began operations between 1956 and 1958, and two have have started since 1975.

Table III-2 (page 4847) lists the 1982 production ranges for the titanium plants. Five of the eight plants produce small quantities of titanium, less than 500 kkg/yr. Of the remaining three plants, two produce more than 5,000 kkg/yr.

Table III-3 (page 4848) lists the major production processes associated with the manufacture of titanium. Also shown is the number of plants generating wastewater from these processes.

Table III-1

INITIAL OPERATING YEAR (RANGE) SUMMARY OF PLANTS
IN THE TITANIUM SUBCATEGORY BY DISCHARGE TYPE

Type of Plant Discharge	Initial Operating Year (Range) (Plant Age in Years)					Total
	1982-1963 (0-20)	1962-1953 (20-30)	1952-1943 (30-40)	1942-1933 (40-50)	Before 1932 (50+)	
Direct	0	3	0	1	0	4
Indirect	1	0	0	1	0	2
Zero	1	0	0	0	0	1
Dry	0	0	1	0	0	1
Total	2	3	1	2	0	8

Table III-2

PRODUCTION RANGES FOR THE TITANIUM SUBCATEGORY

Type of Plant Discharge	Titanium Production Ranges for 1982 (kkg/yr)					Total Number of Plants
	0-250	250-500	500-1,000	1,000-5,000	5,000+	
Direct	1	0	0	1	2	4
Indirect*						2
Zero	0	1	0	0	0	1
Dry	1	0	0	0	0	1
						8

*Data for these plants are claimed to be confidential.

Table III-3

SUMMARY OF TITANIUM SUBCATEGORY PROCESSES AND ASSOCIATED WASTE STREAMS

Process	Number of Plants With Process	Number of Plants Reporting Generation of Wastewater*
Chlorination of Rutile Ore	2	
- Chlorination Off-Gas Wet Air Pollution Control	2	2
- Chlorination Area-Vent Wet Air Pollution Control	1	1
Reduction to Titanium Sponge	4	
- $TiCl_4$ Handling Wet Air Pollution Control	1	1
- Reduction Area Wet Air Pollution Control	4	4
- Melt Cell Wet Air Pollution Control	1	1
- Chlorine Liquefaction Wet Air Pollution Control	1	1
- Sodium Reduction Container Reconditioning Wash Water	1	1
- Chip Crushing Wet Air Pollution Control	2	2
Titanium Sponge Purification	5	
- Acid Leachate and Rinse Water	4	4
- Sponge Crushing and Screening Wet Air Pollution Control	1	1
Casting and Secondary Titanium Processing	3	
- Acid Pickle and Wash Water	3	3
- Scrap Milling Wet Air Pollution Control	1	1
- Scrap Detergent Wash Water	2	2
- Casting Crucible Wash Water	2	2
- Casting Contact Cooling Water	1	1

*Through reuse or evaporation practices, a plant may "generate" a wastewater from a particular process but not discharge it.

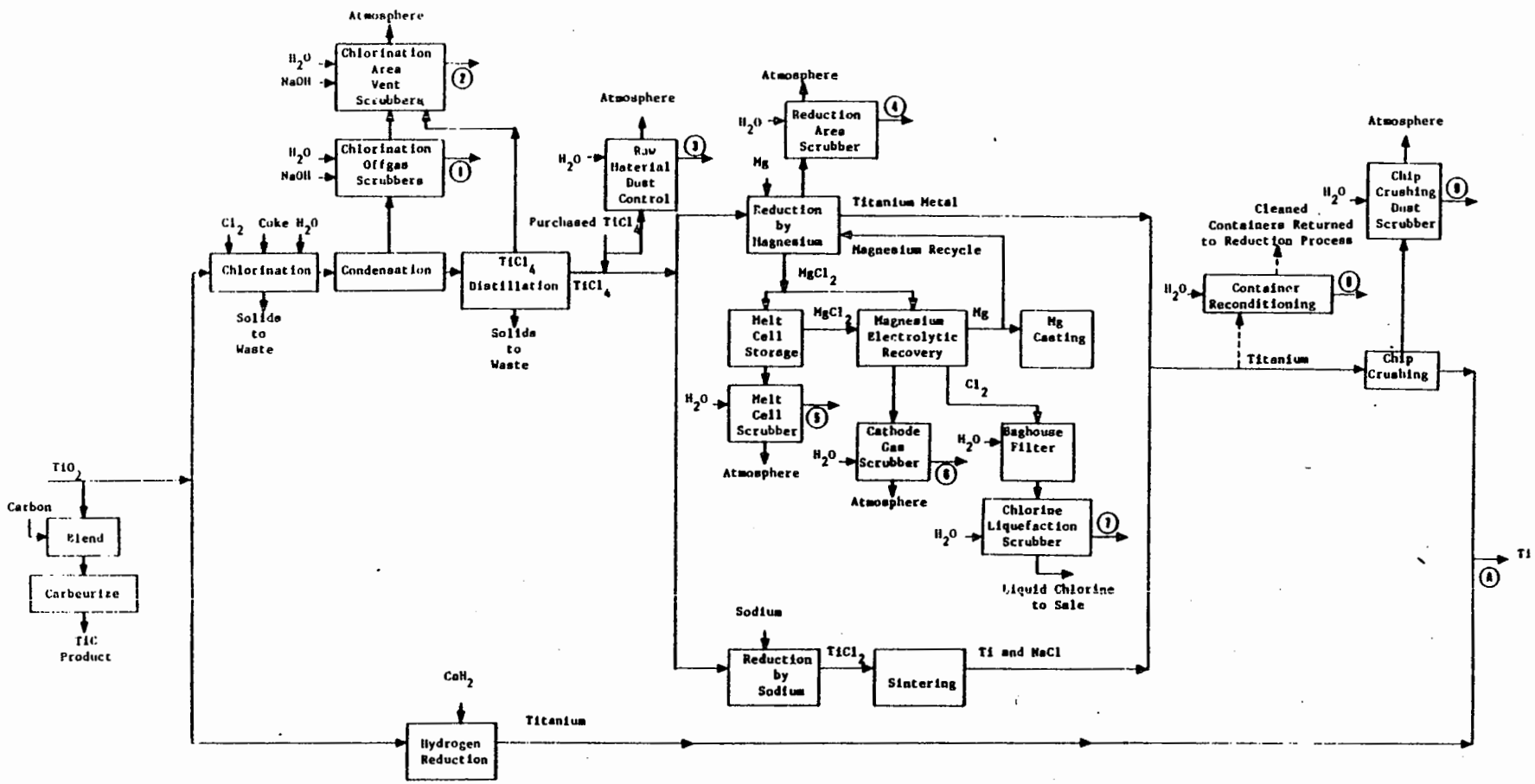

Figure III-1

TITANIUM PRODUCTION PROCESS

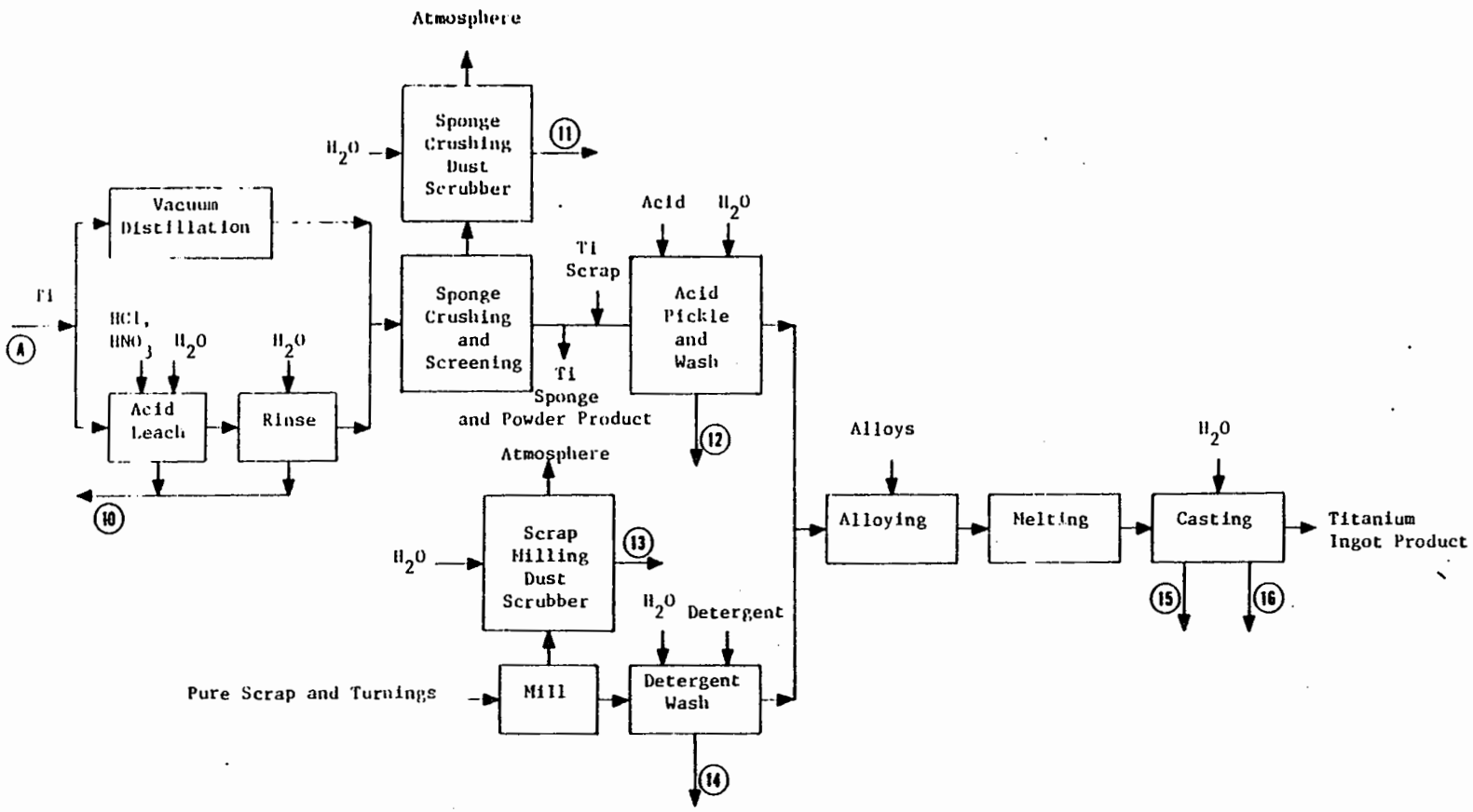

Figure III-1 (Continued)

TITANIUM PRODUCTION PROCESS

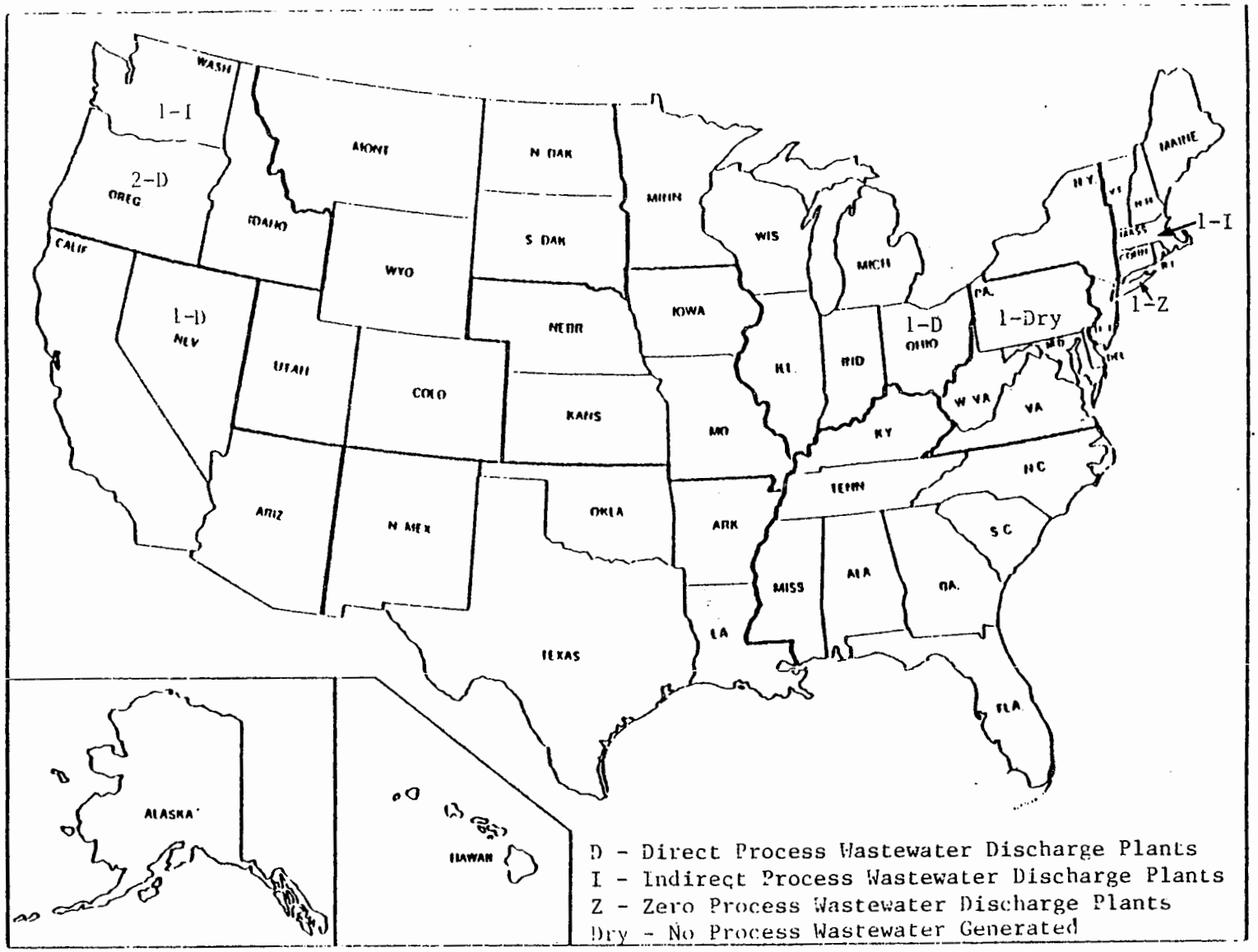

Figure III-2

GEOGRAPHIC LOCATIONS OF THE TITANIUM SUBCATEGORY PLANTS

THIS PAGE INTENTIONALLY LEFT BLANK

SECTION IV

SUBCATEGORIZATION

This section summarizes the factors considered during the designation of the related subdivisions or building blocks in the secondary titanium subcategory.

FACTORS CONSIDERED IN SUBDIVIDING THE PRIMARY AND SECONDARY TITANIUM SUBCATEGORY

The factors listed previously for general subcategorization were each evaluated when considering subdivision of the primary and secondary titanium subcategory. In the discussion that follows, the factors will be described as they pertain to this particular subcategory.

The rationale for considering further subdivision of the primary and secondary titanium subcategory is based primarily on differences in the production processes and raw materials used. Within this subcategory, a number of different operations are performed, which may or may not have a water use or discharge, and which may require the establishment of separate effluent limitations. While primary and secondary titanium is still considered a single subcategory, a thorough examination of the production processes has illustrated the need for limitations and standards based on a specific set of waste streams. Limitations will be based on specific flow allowances for the following subdivisions:

1. Chlorination off-gas wet air pollution control,
2. Chlorination area-vent wet air pollution control,
3. $TiCl_4$ handling wet air pollution control,
4. Reduction area wet air pollution control,
5. Melt cell wet air pollution control,
6. Chlorine liquefaction wet air pollution control,
7. Sodium reduction container reconditioning wash water,
8. Chip crushing wet air pollution control,
9. Acid leachate and rinse water,
10. Sponge crushing and screening wet air pollution control,
11. Acid pickle and wash water,
12. Scrap milling wet air pollution control,
13. Scrap detergent wash water,
14. Casting crucible wash water, and
15. Casting contact cooling water.

These subdivisions follow directly from differences between the processing steps used in titanium production. Chlorination of rutile ore, reduction to titanium sponge, sponge purification, and casting and secondary titanium processing each have various steps which may generate wastewaters.

Chlorination of rutile ore to titanium tetrachloride,

$TiCl_4$, establishes the need for the first two subdivisions. The $TiCl_4$, which is a liquid at ambient temperature and pressure, is condensed from the reaction gas and purified by distillation. Wet air pollution control devices may be used to control off-gases from the condensers and fumes from the chlorination area. These two subdivisions are necessary to account for these wastewater sources.

The third through eighth subdivisions result from differences in the processes by which $TiCl_4$ is reduced to titanium metal sponge. Wet air pollution control may be required at plants which store and handle $TiCl_4$ as a raw material. If magnesium is used in the reduction process, wet air pollution control may be required for the reaction off-gases. Three subdivisions result from the wet air pollution control associated with the recovery of magnesium and chlorine from magnesium chloride formed during TiO_2 reduction. When sodium is used in the reduction process, a wastewater stream is created by the washing of reusable reaction vessels. Another subdivision results from the wet air pollution control which may be required when titanium sponge is chipped out of the reaction containers. These six separate subdivisions are necessary because some plants do not use all of these processes.

The ninth and tenth subdivisions result from the differences in titanium sponge purification practices among plants. Remaining impurities such as magnesium and sodium chlorides are removed from the titanium sponge by vacuum distillation or by leaching. Vacuum distillation is a dry process, but leaching results in a wastewater stream. Wet air pollution control may be associated with the crushing and screening of the purified sponge in plants where titanium powder is a final product. Subdivisions for leaching and wet air pollution control are necessary to reflect the presence or absence of these processes at each plant.

The eleventh through fifteenth subdivisions account for the differences in casting and secondary titanium processing between plants. Scrap metal may require milling, pickling, or detergent washing operations, each of which may create a wastewater stream. Casting operations may include the use of crucible wash water and contact cooling water. Separate subdivisions are necessary for these operations to account for these wastewater sources.

OTHER FACTORS

Factors other than manufacturing processes which were considered in this evaluation were determined to be inappropriate bases for subdivision. Air pollution control methods, treatment costs, and total energy requirements are functions of the selected subcategorization factors, namely metal product, raw materials, and production processes. For reasons discussed in Section IV of Vol. I, factors such as plant age, plant size, and number of employees were also evaluated and determined to be inappropriate bases for subdivision of this nonferrous metals subcategory.

PRODUCTION NORMALIZING PARAMETERS

As discussed previously, the effluent limitations and standards developed in this document establish mass limitations on the discharge of specific pollutant parameters. To allow these limitations and standards to be applied to plants with various production capacities, the mass of pollutant discharged must be related to a unit of production. This factor is known as the production normalizing parameter (PNP). In general, the amount of titanium produced by the manufacturing process is used as the PNP. This is based on the principle that the amount of wastewater generated is proportional to the amount of product made. The PNPs for the 15 subdivisions or building blocks are:

Building Block	PNP
1. Chlorination off-gas wet air pollution control	kkg of $TiCl_4$ produced
2. Chlorination area-vent wet air pollution control	kkg of $TiCl_4$ produced
3. $TiCl_4$ handling wet air pollution control	kkg of $TiCl_4$ handled
4. Reduction area wet air pollution control	kkg of titanium produced
5. Melt cell wet air pollution control	kkg of titanium produced
6. Chlorine liquefaction wet air pollution control	kkg of titanium produced
7. Sodium reduction container reconditioning wash water	kkg of titanium produced
8. Chip crushing wet air pollution control	kkg of titanium produced
9. Acid leachate and rinse water	kkg of titanium produced
10. Sponge crushing and screening wet air pollution control	kkg of titanium produced
11. Acid pickle and wash water	kkg of titanium pickled
12. Scrap milling wet air pollution control	kkg of scrap milled

13.	Scrap detergent wash water	kkg of scrap washed
14.	Casting crucible wash water	kkg of titanium cast
15.	Casting contact cooling water	kkg of titanium cast

SECTION V

WATER USE AND WASTEWATER CHARACTERISTICS

This section describes the characteristics of wastewater associated with the primary and secondary titanium subcategory. Water use and discharge rates are explained and then summarized in tables at the end of this section. Data used to characterize the wastewaters are presented. Finally, the specific source, water use and discharge flows, and wastewater characteristics for each separate wastewater source are discussed.

The two principal data sources were used are data collection portfolios (dcp) and field sampling results. Data collection portfolios, completed for each of the primary and secondary titanium plants, contain information regarding wastewater flows and production levels.

In order to quantify the pollutant discharge from primary and secondary titanium plants, a field sampling program was conducted. Wastewater samples were analyzed for 124 of the 126 toxic pollutants and other pollutants deemed appropriate. (Because the analytical standard for TCDD was judged to be too hazardous to be made generally available, samples were never analyzed for this pollutant. Samples were also never analyzed for asbestos. There is no reason to expect that TCDD or asbestos would be present in primary and secondary titanium wastewater.) A total of three plants were selected for sampling in the titanium manufacturing subcategory. A complete list of the pollutants considered and a summary of the techniques used in sampling and laboratory analyses are included in Section V of Vol. I. In general, the samples were analyzed for three classes of pollutants: toxic organic pollutants, toxic metal pollutants, and criteria pollutants (which includes both conventional and nonconventional pollutants).

After proposal, EPA gathered additional wastewater sampling data for eight of the subdivisions in this subcategory. These data were acquired through a self sampling program initiated at the specific request of EPA. These data (Table V-21, page 4925) include analyses for the toxic metals antimony, cadmium, chromium, copper, lead, nickel, thallium and zinc. The data also include analyses for the nonconventional pollutants fluoride and titanium. These data show pollutant concentrations similar to those indicated by the data which EPA had acquired for these subdivisions prior to proposal (Table V-17, page 4883). The data also support the assumptions which EPA had made at proposal concerning the presence and concentrations of pollutants in those subdivisions where we did not have analytical data for specific pollutants. For this reason, the selection of pollutant parameters for limitation in this subcategory (Section VI) has not been revised

based on this new data.

As described in Section IV of this supplement, the primary and secondary titanium subcategory has been further divided into 15 subdivisions, so that the promulgated regulation contains mass discharge limitations and standards for 15 unit processes discharging process wastewater. Differences in the wastewater characteristics associated with these subdivisions are to be expected. For this reason, wastewater streams corresponding to each subdivision are addressed separately in the discussions that follow. These wastewater sources are:

1. Chlorination off-gas wet air pollution control,
2. Chlorination area-vent wet air pollution control,
3. $TiCl_4$ handling wet air pollution control,
4. Reduction area wet air pollution control,
5. Melt cell wet air pollution control,
6. Chlorine liquefaction wet air pollution control,
7. Sodium reduction container reconditioning wash water,
8. Chip crushing wet air pollution control,
9. Acid leachate and rinse water,
10. Sponge crushing and screening wet air pollution control,
11. Acid pickle and wash water,
12. Scrap milling wet air pollution control,
13. Scrap detergent wash water,
14. Casting crucible wash water, and
15. Casting contact cooling water.

WASTEWATER FLOW RATES

Data supplied by data collection portfolio responses were evaluated, and two flow-to-production ratios were calculated for each stream. The two ratios, water use and wastewater discharge flow, are differentiated by the flow value used in calculation. Water use is defined as the volume of water required for a given process per mass of titanium product and is therefore based on the sum of recycle and make-up flows to a given process. Wastewater flow discharged after pretreatment or recycle (if these are present) is used in calculating the production normalized flow, the volume of wastewater discharged from a given process to further treatment, disposal, or discharge per mass of titanium produced. Differences between the water use and wastewater flows associated with a given stream result from recycle, evaporation, and carry-over on the product. The production values used in this calculation correspond to the production normalizing parameter, PNP, assigned to each stream, as outlined in Section IV. As an example, the acid leachate and rinse wastewater is related to titanium metal production. The discharge rate is therefore expressed in liters of leachate and rinse wastewater per metric ton of titanium metal produced.

The production normalized flows were compiled and statistically analyzed by stream type. These production normalized water use and discharge flows are presented by subdivision in Tables V-1 through V-15 (pages 4866 through 4872). Where appropriate, an

attempt was made to identify factors that could account for variations in water use and discharge rates. These variations are discussed later in this section by subdivision. A similar analysis of factors affecting the wastewater flows is presented in Sections X, XI, and XII where representative BAT, NSPS, and pretreatment flows are selected for use in calculating the effluent limitations.

The water use and discharge rates shown do not include nonprocess wastewater, such as rainfall runoff and noncontact cooling water.

WASTEWATER CHARACTERISTICS DATA

Data used to characterize the various wastewaters associated with primary and secondary titanium production come from two sources: data collection portfolios (dcp) and analytical data from field sampling trips.

DATA COLLECTION PORTFOLIOS

In the data collection portfolios, plants were asked to indicate which of the priority pollutants were known or believed to be present in their effluent. One plant indicated that priority organics were known to be present, and one plant indicated that priority organics were believed to be present in their effluent. Five plants stated that some of the priority metals were known or believed to be present in their effluent. The responses for eight of the priority metals and cyanide are summarized below.

Pollutant	Known Present	Believed Present
Arsenic	1	0
Chromium	2	1
Copper	2	1
Cyanide	1	1
Lead	0	1
Mercury	1	0
Nickel	3	0
Silver	0	1
Zinc	2	1

FIELD SAMPLING DATA

In order to quantify the concentrations of pollutants present in wastewater from primary and secondary titanium plants, wastewater samples were collected at three of the eight plants. Diagrams indicating the sampling sites and contributing production processes are shown in Figures V-1 and V-2 (pages 4927 and 4928).

The sampling data for the primary and secondary titanium subcategory are presented in Tables V-16 through V-20 (pages 4873 through 4915). Tables V-17 through V-19 show raw wastewater analyses, and Table V-20 presents an analysis of a treated effluent. The stream codes listed may be used to

identify the location of each of the samples on process flow diagrams in Figures V-1 and V-2. Where no data are listed for a specific day of sampling, the wastewater samples for the stream were not collected. Additional sampling data for the primary and secondary titanium subcategory are contained in the confidential record.

Several points regarding these tables should be noted. First, the data tables include some samples measured at concentrations considered not quantifiable. The base-neutral extractable, acid extractable, and volatile organics are generally considered not quantifiable at concentrations equal to or less than 0.010 mg/l. Below this concentration, organic analytical results are not quantitatively accurate; however, the analyses are useful to indicate the presence of a particular pollutant. The pesticide fraction is considered not quantifiable at concentrations equal to or less than 0.005 mg/l.

Second, the detection limits shown on the data tables for toxic metals and conventional and nonconventional pollutants are not the same in all cases as the published detection limits for these pollutants by the same analytical methods. The detection limits used were reported with the analytical data and hence are the appropriate limits to apply to the data. Detection limit variation can occur as a result of a number of laboratory-specific, equipment-specific, and daily operator-specific factors. These factors can include day-to-day differences in machine calibration, variation in stock solutions, and variation in operators.

Third, the statistical analysis of data includes some samples measured at concentrations considered not quantifiable. For data considered as detected but below quantifiable concentrations, a value of zero is used for averaging. Priority organic, nonconventional, and conventional pollutant data reported with a "less than" sign are considered as detected, but not further quantifiable. A value of zero is also used for averaging. If a pollutant is reported as not detected, it is assigned a value of zero in calculating the average. Finally, priority metal values reported as less than a certain value were considered as not quantifiable, and consequently were assigned a value of zero in the calculation of the average.

Finally, appropriate source water concentrations are presented with the summaries of the sampling data. The method by which each sample was collected is indicated by number, as follows:

1 One-time grab
2 Manual composite during intermittent process operation
3 8-hour manual composite
4 8-hour automatic composite
5 24-hour manual composite
6 24-hour automatic composite

WASTEWATER CHARACTERISTICS AND FLOWS BY SUBDIVISION

Because primary and secondary titanium production involves 15 principal sources of wastewater, each of which has potentially different characteristics and flows, the wastewater characteristics and discharge rates corresponding to each subdivision will be described separately. A brief discussion of why the associated production processes generate a wastewater and explanations for variations of water use within each subdivision will also be presented.

CHLORINATION OFF-GAS WET AIR POLLUTION CONTROL

Rutile ore, TiO_2, is converted to TiCl34 by chlorination in two of the eight titanium plants. The resulting $TiCl_4$ gas is condensed and purified before being sent to the reduction facility. Off-gases from the condensers pass through a water wash tower, a caustic tower, and a Venturi scrubber in series to remove chlorine gas and particulates introduced during the chlorination process.

The three scrubbers are considered together to be a single wastewater source because both plants reporting the use of chlorination off-gas scrubbers use all three in series as a single unit operation. The water use and discharge rates for chlorination off-gas wet air pollution control are listed in Table V-1 (page 4866). Sampling data collected through a self-sampling program are presented in Table V-21 (page 4925) show that this wastewater contains treatable concentrations of cadmium and titanium.

CHLORINATION AREA-VENT WET AIR POLLUTION CONTROL

In one plant, the cleaned gas from the chlorination off-gas scrubbers is routed to a chlorination area scrubbing system where it is combined with ventilation vapors from $TiCl_4$ purification operations. Like the off-gas scrubbers, the area-vent wet air pollution control consists of a water wash tower, and a Venturi scrubber operated in series. After passing through this system, the cleaned gases are vented to the atmosphere.

The water use and discharge rates for chlorination area-vent wet air pollution control are listed in Table V-2 (page 4866). Sampling data for this wastewater stream are shown in Table V-21 (page 4925). These data show that this wastewater contains treatable concentrations of antimony, chromium and titanium.

$TiCl_4$ HANDLING WET AIR POLLUTION CONTROL

Four plants use $TiCl_4$ as a raw material in titanium production. One of these plants reports the use of wet air pollution control with an associated wastewater flow. The water use and discharge rates for this stream are listed in Table V-3 (page 4866). Sampling Data for this wastewater stream are

presented in Table V-21 (page 4925). These data show that this wastewater contains treatable concentrations of thallium, titanium and suspended solids.

REDUCTION AREA WET AIR POLLUTION CONTROL

The reduction of $TiCl_4$ to titanium metal is accomplished by a batch process using either sodium or magnesium as the reducing agent. In the four plants which practice magnesium reduction in an inert atmosphere, vent taps are made periodically to remove vapors from the reduction vessel. These vapors are cleansed in a reduction area scrubber and then vented to the atmosphere. No wet air pollution control was reported for reduction of $TiCl_4$ by sodium.

The water use and discharge rates for reduction area wet air pollution control are listed in Table V-4. Sampling data are presented in Table V-17 (page 4883). Additional sampling data for this stream are contained in Table V-21 (page 4925). This waste stream is characterized by treatable concentrations of magnesium, chromium, nickel, and titanium.

MELT CELL WET AIR POLLUTION CONTROL

During the reduction of $TiCl_4$ by magnesium, molten magnesium chloride is tapped off as formed and transferred to electrolytic cells for magnesium recovery. In one plant, during periods of rapid $MgCl_2$ formation, excess $MgCl_2$ is stored in a melt cell before continuing on to the electrolytic cell. Vapors from the melt cell are collected and converted to hydrochloric acid in a water scrubber.

The water use and discharge rates for melt cell wet air pollution control are listed in Table V-5 (page 4867). Sampling data for this waste stream are contained in the confidential record. This stream is characterized by an acidic pH and low concentrations of toxic metals.

CHLORINE LIQUEFACTION WET AIR POLLUTION CONTROL

The electrolytic reduction of $MgCl_2$ generates chlorine gas. After passing through bagfilters, this gas returns to the chlorination or reduction processes or is liquefied and sold. Some air always escapes from the gas during liquefaction and although its volume is small, it is saturated with chlorine and must be treated before venting to the atmosphere. Burners convert the escaping chlorine to HCl vapors in the one plant which practices chlorine liquefaction. The HCl vapors are then scrubbed with water, creating an acidic waste stream.

The water use and discharge rates for chlorine liquefaction wet air pollution control are listed in Table V-6 (page 4868). Sampling data for this waste stream are contained in the confidential record. This stream is characterized by a

low pH and treatable concentrations of priority metals.

SODIUM REDUCTION CONTAINER RECONDITIONING WASH WATER

The conversion of $TiCl_4$ to titanium metal is a batch process which is carried out in a retort vessel. When the reduction is complete, the titanium cake is chipped out of the container and sent on for further processing. The container can then be cleaned and returned to the reduction process for reuse. Of the two plants reporting reduction container cleaning and reuse, one uses magnesium to reduce $TiCl_4$ and one uses sodium. Only the plant using sodium in its reduction process reports a wastewater flow from the container reconditioning operation.

The water use and discharge rates for the sodium reduction container reconditioning wash are listed in Table V-7 (page 4868). Sampling data for this waste stream are presented in Table V-21 (page 4925). These data show that this wastewater contains treatable concentrations of titanium and suspended solids.

CHIP CRUSHING WET AIR POLLUTION CONTROL

The titanium cake formed by reduction is chipped out of the reduction container and sent on for further purification. To increase the effectiveness of these purification steps, the titanium chips may be crushed when they are removed from the reduction container. Two plants report wet air pollution control for the crushing operation with various degrees of scrubber water recycle.

The water use and discharge rates for chip crushing wet air pollution control are listed in Table V-8 (page 4868). Sampling data for this waste stream are contained in able V-21 (page 4925). These data show that this wastewater contains treatable concentrations of thallium, titanium and suspended solids.

ACID LEACHATE AND RINSE WATER

Purification of the titanium chips to remove the remaining Mg and $MgCl_2$ impurities can be accomplished either by vacuum distillation or by leaching. Vacuum distillation, practiced by one plant, does not result in the production of a wastewater stream. Acid leaching with HCl or HNO_3 followed by a water rinse produces acidic wastewater streams at the four plants reporting this purification process. The water use and discharge rates for acid leachate and rinse water are listed in Table V-9 (page 4869). At two plants, separate wastewater samples were taken from the leaching and rinsing operations. At one plant, a combined leach and rinse wastewater sample was analyzed. The sampling data are presented in Tables V-18, V-19, and V-20 (pages 4893, 4904 and 4915). This waste stream is characterized by treatable concentrations of copper, lead,

nickel, thallium, and suspended solids.

SPONGE CRUSHING AND SCREENING WET AIR POLLUTION CONTROL

Of the seven plants producing titanium metal, four sell titanium sponge or powder as their final product and three do further processing to produce titanium ingots and castings. One plant reports a wastewater flow from a dust control scrubber associated with the crushing, screening, and storage of leached titanium powder.

The water use and discharge rates for the sponge crushing and screening wet air pollution control are listed in Table V-10 (page 4869). Sampling data for this waste stream are contained in Table V-21 (page 4925). These data show that this wastewater contains treatable concentrations of thallium and suspended solids.

ACID PICKLE AND WASH WATER

Three plants report the use of acid pickling to remove surface oxides from massive titanium scrap before alloying and casting. The pickling mixture typically contains nitric, hydrochloric, and hydrofluoric acids. When a washing step was associated with the acid pickling, flow data were reported for the combined pickle and wash stream.

The water use and discharge rates for acid pickle and wash water are listed in Table V-11 (page 4870). Sampling data for this waste stream are contained in the confidential record. This acidic waste stream is characterized by a low production normalized flow and treatable concentrations of antimony, cadmium, chromium, copper, lead, nickel, and zinc. No sampling data for fluoride are available, but because hydrofluoric acid is commonly used as a pickling acid, a high concentration of fluoride in the wastewater stream is expected.

SCRAP MILLING WET AIR POLLUTION CONTROL

Pure titanium scrap and turnings can be alloyed with titanium sponge and cast into ingots. One plant mills the scrap and provides wet air pollution control. The water use and discharge rates for scrap milling wet air pollution control are listed in Table V-12 (page 4870). No sampling data are available for this stream, but it is expected to contain suspended solids, titanium, and low concentrations of toxic metals.

SCRAP DETERGENT WASH WATER

Scrap material such as titanium turnings must be washed with a soapy solution to remove oil and dirt before being alloyed and cast into ingots. This batch process results in a caustic waste stream which is reported at two plants. The water use and discharge rates for scrap detergent wash water are listed in Table V-13 (page 4871). This waste stream is characterized by

treatable concentrations of oil and grease, suspended solids, and toxic metals.

CASTING CRUCIBLE WASH WATER

Two plants report a waste stream from the washing of crucibles used in casting operations. The water use and discharge rates of this oily waste from the only plant to provide flow data are reported in Table V-14 (page 4871). Sampling data for this waste stream are contained in Table V-21 (page 4925). These data show that this wastewater contains treatable concentrations of copper, lead and titanium.

CASTING CONTACT COOLING WATER

One plant reports the use of contact cooling water from a cooling pond in its casting operations. The only other plant reporting casting cooling water uses noncontact water. The water use and discharge rates of the casting contact cooling water are listed in Table V-15 (page 4872). Sampling data for this waste stream are contained in the confidential record. This waste stream is characterized by treatable concentrations of oil and grease, suspended solids, and nickel.

TABLE V-1

WATER USE AND DISCHARGE RATES FOR
CHLORINATION OFF-GAS WET AIR POLLUTION CONTROL

(l/kkg of $TiCl_4$ produced)

Plant Code	Percent Recycle	Production Normalized Water Use Flow	Production Normalized Discharge Flow
1125	0	936	936
1085	NR	NR	3,334

TABLE V-2

WATER USE AND DISCHARGE RATES FOR
CHLORINATION AREA-VENT WET AIR POLLUTION CONTROL

(l/kkg of $TiCl_4$ produced)

Plant Code	Percent Recycle	Production Normalized Water Use Flow	Production Normalized Discharge Flow
1125	0	1,040	1,040

TABLE V-3

WATER USE AND DISCHARGE RATES FOR
$TiCl_4$ HANDLING WET AIR POLLUTION CONTROL

(l/kkg of $TiCl_4$ handled)

Plant Code	Percent Recycle	Production Normalized Water Use Flow	Production Normalized Discharge Flow
1075	NR	NR	187

TABLE V-4

WATER USE AND DISCHARGE RATES FOR
REDUCTION AREA WET AIR POLLUTION CONTROL

(l/kkg of Ti metal produced)

Plant Code	Percent Recycle	Production Normalized Water Use Flow	Production Normalized Discharge Flow
1125	0	15,789	15,789
1017	0	42,508	42,508
1085	0	65,613	65,613
1044	0	39,598	39,598

TABLE V-5

WATER USE AND DISCHARGE RATES FOR
MELT CELL WET AIR POLLUTION CONTROL

(l/kkg of Ti metal produced)

Plant Code	Percent Recycle	Production Normalized Water Use Flow	Production Normalized Discharge Flow
1017	0	21,254	21.254

TABLE V-6

WATER USE AND DISCHARGE RATES FOR
CHLORINE LIQUEFACTION WET AIR POLLUTION CONTROL

(l/kkg of Ti metal produced)

Plant Code	Percent Recycle	Production Normalized Water Use Flow	Production Normalized Discharge Flow
1017	0	297,559	297,559

TABLE V-7

WATER USE AND DISCHARGE RATES FOR
SODIUM REDUCTION CONTAINER RECONDITIONING WASH WATER

(l/kkg of Ti metal produced)

Plant Code	Percent Recycle	Production Normalized Water Use Flow	Production Normalized Discharge Flow
1075	0	1,282	1,282

TABLE V-8

WATER USE AND DISCHARGE RATES FOR
CHIP CRUSHING WET AIR POLLUTION CONTROL

(l/kkg of Ti metal produced)

Plant Code	Percent Recycle	Production Normalized Water Use Flow	Production Normalized Discharge Flow
1075	0	22,922	22,922
1085	NR	NR	1,094

TABLE V-9

WATER USE AND DISCHARGE RATES FOR
ACID LEACHATE AND RINSE WATER

(l/kkg of Ti metal produced)

Plant Code	Percent Recycle	Production Normalized Water Use Flow	Production Normalized Discharge Flow
1058	0	16,354	16,354
1017	0	11,840	11,840
1075*	0	27,728	27,728
1085	0	16,185	16,185

*Reported acid leachate flow only.

TABLE V-10

WATER USE AND DISCHARGE RATES FOR
SPONGE CRUSHING AND SCREENING WET AIR POLLUTION CONTROL

(l/kkg of Ti metal produced)

Plant Code	Percent Recycle	Production Normalized Water Use Flow	Production Normalized Discharge Flow
1075	0	6,470	6,470

TABLE V-11

WATER USE AND DISCHARGE RATES FOR
ACID PICKLE AND WASH WATER

(l/kkg of Ti metal pickled)

Plant Code	Percent Recycle	Production Normalized Water Use Flow	Production Normalized Discharge Flow
1017	NR	NR	95
1085	0	27	27
1149	NR	NR	NR

NR = data not reported.

TABLE V-12

WATER USE AND DISCHARGE RATES FOR
SCRAP MILLING WET AIR POLLUTION CONTROL

(l/kkg of scrap milled)

Plant Code	Percent Recycle	Production Normalized Water Use Flow	Production Normalized Discharge Flow
1085	0	2,261	2,261

TABLE V-13

WATER USE AND DISCHARGE RATES FOR
SCRAP DETERGENT WASH WATER

(l/kkg of scrap washed)

Plant Code	Percent Recycle	Production Normalized Water Use Flow	Production Normalized Discharge Flow
1017	0	18,064	18,064
1085	0	27,397	27,397

TABLE V-14

WATER USE AND DISCHARGE RATES FOR
CASTING CRUCIBLE WASH WATER

(l/kkg of Ti metal cast)

Plant Code	Percent Recycle	Production Normalized Water Use Flow	Production Normalized Discharge Flow
1017	0	477	477
1085	NR	NR	NR

NR = Present, but data not reported in dcp.

TABLE V-15

WATER USE AND DISCHARGE RATES FOR CASTING CONTACT COOLING WATER

(l/kkg of Ti metal cast)

Plant Code	Percent Recycle	Production Normalized Water Use Flow	Production Normalized Discharge Flow
1017	NR	NR	729,730

Table V-16

TITANIUM SAMPLING DATA
REDUCTION AREA WET AIR POLLUTION CONTROL
RAW WASTEWATER

Pollutant	Stream Code	Sample Type†	Concentrations (mg/l) Source	Day 1	Day 2	Day 3
Toxic Pollutants						
1. acenaphthene	204	1		ND		
2. acrolein	204	1		ND		
3. acrylonitrile	204	1		ND		
4. benzene	204	1		ND		
5. benzidine	204	1		ND		
6. carbon tetrachloride	204	1		ND		
7. chlorobenzene	204	1		ND		
8. 1,2,4-trichlorobenzene	204	1		ND		
9. hexachlorobenzene	204	1		ND		
10. 1,2-dichloroethane	204	1		ND		
11. 1,1,1-trichloroethane	204	1		ND		
12. hexachloroethane	204	1		ND		
13. 1,1-dichloroethane	204	1		ND		

Table V-16 (Continued)

TITANIUM SAMPLING DATA
REDUCTION AREA WET AIR POLLUTION CONTROL
RAW WASTEWATER

Pollutant	Stream Code	Sample Type†	Concentrations (mg/l) Source	Day 1	Day 2	Day 3
Toxic Pollutants (Continued)						
14. 1,1,2-trichloroethane	204	1		ND		
15. 1,1,2,2-tetrachloroethane	204	1		ND		
16. chloroethane	204	1		ND		
17. bis(chloromethyl)ether	204	1		ND		
18. bis(2-chloroethyl)ether	204	1		ND		
19. 2-chloroethyl vinyl ether	204	1		ND		
20. 2-chloronaphthalene	204	1		ND		
21. 2,4,6-trichlorophenol	204	1		ND		
22. p-chloro-m-cresol	204	1		ND		
23. chloroform	204	1		ND		
24. 2-chlorophenol	204	1		ND		
25. 1,2-dichlorobenzene	204	1		ND		
26. 1,3-dichlorobenzene	204	1		ND		
27. 1,4-dichlorobenzene	204	1		ND		

Table V-16 (Continued)

TITANIUM SAMPLING DATA
REDUCTION AREA WET AIR POLLUTION CONTROL
RAW WASTEWATER

Pollutant	Stream Code	Sample Type†	Concentrations (mg/l) Source	Day 1	Day 2	Day 3
Toxic Pollutants (Continued)						
28. 3,3'-dichlorobenzidine	204	1		ND		
29. 1,1-dichloroethylene	204	1		ND		
30. 1,2-trans-dichloroethylene	204	1		ND		
31. 2,4-dichlorophenol	204	1		ND		
32. 1,2-dichloropropane	204	1		ND		
33. 1,3-dichloropropene	204	1		ND		
34. 2,4-dimethylphenol	204	1		ND		
35. 2,4-dinitrotoluene	204	1		ND		
36. 2,6-dinitrotoluene	204	1		ND		
37. 1,3-diphenylhydrazine	204	1		ND		
38. ethylbenzene	204	1		ND		
39. fluoranthene	204	1		ND		
40. 4-chlorophenyl phenyl ether	204	1		ND		

Table V-16 (Continued)

TITANIUM SAMPLING DATA
REDUCTION AREA WET AIR POLLUTION CONTROL
RAW WASTEWATER

Pollutant	Stream Code	Sample Type†	Concentrations (mg/l) Source	Day 1	Day 2	Day 3
Toxic Pollutants (Continued)						
41. 4-bromophenyl phenyl ether	204	1		ND		
42. bis(2-chloroisopropyl)ether	204	1		ND		
43. bis(2-chloroethoxy)methane	204	1		ND		
44. methylene chloride	204	1		ND		
45. methyl chloride (chloromethane)	204	1		ND		
46. methyl bromide (bromomethane)	204	1		ND		
47. bromoform (tribromomethane)	204	1		ND		
48. dichlorobromomethane	204	1		ND		
49. trichlorofluoromethane	204	1		ND		
50. dichlorodifluoromethane	204	1		ND		
51. chlorodibromomethane	204	1		ND		
52. hexachlorobutadiene	204	1		ND		
53. hexachlorocyclopentadiene	204	1		ND		
54. isophorone	204	1		ND		

Table V-16 (Continued)

TITANIUM SAMPLING DATA
REDUCTION AREA WET AIR POLLUTION CONTROL
RAW WASTEWATER

Pollutant	Stream Code	Sample Type†	Concentrations (mg/l) Source	Day 1	Day 2	Day 3
Toxic Pollutants (Continued)						
55. naphthalene	204	1		ND		
56. nitrobenzene	204	1		ND		
57. 2-nitrophenol	204	1		ND		
58. 4-nitrophenol	204	1		ND		
59. 2,4-dinitrophenol	204	1		ND		
60. 4,6-dinitro-o-cresol	204	1		ND		
61. N-nitrosodimethylamine	204	1		ND		
62. N-nitrosodiphenylamine	204	1		ND		
63. N-nitrosodi-n-propylamine	204	1		ND		
64. pentachlorophenol	204	1		ND		
65. phenol	204	1		ND		
66. bis(2-ethylhexyl) phthalate	204	1		0.040		
67. butyl benzyl phthalate	204	1		ND		

Table V-16 (Continued)

TITANIUM SAMPLING DATA
REDUCTION AREA WET AIR POLLUTION CONTROL
RAW WASTEWATER

Pollutant	Stream Code	Sample Type†	Concentrations (mg/l) Source	Day 1	Day 2	Day 3
Toxic Pollutants (Continued)						
68. di-n-butyl phthalate	204	1		ND		
69. di-n-octyl phthalate	204	1		ND		
70. diethyl phthalate	204	1		ND		
71. dimethyl phthalate	204	1		ND		
72. benzo(a)anthracene	204	1		ND		
73. benzo(a)pyrene	204	1		ND		
74. benzo(b)fluoranthene	204	1		ND		
75. benzo(k)fluoranthane	204	1		ND		
76. chrysene	204	1		ND		
77. acenaphthylene	204	1		ND		
78. anthracene (a)	204	1		ND		
79. benzo(ghi)perylene	204	1		ND		
80. fluorene	204	1		ND		
81. phenanthrene (a)	204	1		ND		

Table V-16 (Continued)

TITANIUM SAMPLING DATA
REDUCTION AREA WET AIR POLLUTION CONTROL
RAW WASTEWATER

Pollutant	Stream Code	Sample Type†	Concentrations (mg/l) Source	Day 1	Day 2	Day 3
Toxic Pollutants (Continued)						
82. dibenzo(a,h)anthracene	204	1		ND		
83. indeno (1,2,3-c,d)pyrene	204	1		ND		
84. pyrene	204	1		ND		
85. tetrachloroethylene	204	1		ND		
86. toluene	204	1		ND		
87. trichloroethylene	204	1		ND		
88. vinyl chloride (chloroethylene)	204	1		ND		
89. aldrin	204	1		ND		
90. dieldrin	204	1		ND		
91. chlordane	204	1		ND		
92. 4,4'-DDT	204	1		ND		
93. 4,4'-DDE	204	1		ND		
94. 4,4'-DDD	204	1		ND		

Table V-16 (Continued)

TITANIUM SAMPLING DATA
REDUCTION AREA WET AIR POLLUTION CONTROL
RAW WASTEWATER

Pollutant	Stream Code	Sample Type†	Concentrations (mg/l) Source	Day 1	Day 2	Day 3
Toxic Pollutants (Continued)						
95. alpha-endosulfan	204	1		ND		
96. beta-endosulfan	204	1		ND		
97. endosulfan sulfate	204	1		ND		
98. endrin	204	1		ND		
99. endrin aldehyde	204	1		ND		
100. heptachlor	204	1		ND		
101. heptachlor epoxide	204	1		ND		
102. alpha-BHC	204	1		ND		
103. beta-BHC	204	1		ND		
104. gamma-BHC	204	1		ND		
105. delta-BHC	204	1		ND		
106. PCB-1242 (b)	204	1		ND		
107. PCB-1254 (b)	204	1		ND		
108. PCB-1221 (b)	204	1		ND		

Table V-16 (Continued)

TITANIUM SAMPLING DATA
REDUCTION AREA WET AIR POLLUTION CONTROL
RAW WASTEWATER

Pollutant	Stream Code	Sample Type†	Concentrations (mg/l) Source	Day 1	Day 2	Day 3
Toxic Pollutants (Continued)						
95. alpha-endosulfan	204	1		ND		
96. beta-endosulfan	204	1		ND		
97. endosulfan sulfate	204	1		ND		
98. endrin	204	1		ND		
99. endrin aldehyde	204	1		ND		
100. heptachlor	204	1		ND		
101. heptachlor epoxide	204	1		ND		
102. alpha-BHC	204	1		ND		
103. beta-BHC	204	1		ND		
104. gamma-BHC	204	1		ND		
105. delta-BHC	204	1		ND		
106. PCB-1242 (b)	204	1		ND		
107. PCB-1254 (b)	204	1		ND		
108. PCB-1221 (b)	204	1		ND		

Table V-16 (Continued)

TITANIUM SAMPLING DATA
REDUCTION AREA WET AIR POLLUTION CONTROL
RAW WASTEWATER

Pollutant	Stream Code	Sample Type†	Concentrations (mg/l) Source	Day 1	Day 2	Day 3
Toxic Pollutants (Continued)						
109. PCB-1232 (c)	204	1		ND		
110. PCB-1248 (c)	204	1		ND		
111. PCB-1260 (c)	204	1		ND		
112. PCB-1016 (c)	204	1		ND		
113. toxaphene	204	1		ND		
Conventional Pollutants						
pH (standard units)	204	1		7.4		

†Sample Type Code:
1 - One-time grab
2 - Manual composite during intermittent process operation
3 - 8-hour manual composite
4 - 8-hour automatic composite
5 - 24-hour manual composite
6 - 24-hour automatic composite
A - Anticipated quality if new process implemented.

(a),(b),(c) Reported together

Table V-17

TITANIUM SAMPLING DATA
ACID LEACHATE AND RINSE WATER
RAW WASTEWATER

Pollutant	Stream Code	Sample Type†	Concentrations (mg/l) Source	Day 1	Day 2	Day 3
Toxic Pollutants						
1. acenaphthene	211	1		ND	ND	
2. acrolein	211	1				
3. acrylonitrile	211	1				
4. benzene	211	1				
5. benzidine	211	1		ND	ND	
6. carbon tetrachloride	211	1				
7. chlorobenzene	211	1		ND	ND	
8. 1,2,4-trichlorobenzene	211	1				
9. hexachlorobenzene	211	1		ND	ND	
10. 1,2-dichloroethane	211	1				
11. 1,1,1-trichloroethane	211	1				
12. hexachloroethane	211	1		ND	ND	
13. 1,1-dichloroethane	211	1				

Table V-17 (Continued)

TITANIUM SAMPLING DATA
ACID LEACHATE AND RINSE WATER
RAW WASTEWATER

Pollutant	Stream Code	Sample Type†	Concentrations (mg/l) Source	Day 1	Day 2	Day 3
Toxic Pollutants (Continued)						
19. 2-chloroethyl vinyl ether	211	1				
20. 2-chloronaphthalene	211	1		ND	ND	
21. 2,4,6-trichlorophenol	211	1		ND	ND	
22. p-chloro-m-cresol	211	1		ND	ND	
23. chloroform	211	1				
24. 2-chlorophenol	211	1		ND	ND	
25. 1,2-dichlorobenzene	211	1		ND	ND	
26. 1,3-dichlorobenzene	211	1		ND	ND	
27. 1,4-dichlorobenzene	211	1		ND	ND	
28. 3,3'-dichlorobenzidine	211	1		ND	ND	
29. 1,1-dichloroethylene	211	1				
30. 1,2-*trans*-dichloroethylene	211	1				
31. 2,4-dichlorophenol	211	1		ND	ND	

Table V-17 (Continued)

TITANIUM SAMPLING DATA
ACID LEACHATE AND RINSE WATER
RAW WASTEWATER

Pollutant	Stream Code	Sample Type†	Concentrations (mg/l) Source	Day 1	Day 2	Day 3
Toxic Pollutants (Continued)						
32. 1,2-dichloropropane	211	1				
33. 1,3-dichloropropene	211	1				
34. 2,4-dimethylphenol	211	1		ND	ND	
35. 2,4-dinitrotoluene	211	1		ND	ND	
36. 2,6-dinitrotoluene	211	1		ND	ND	
37. 1,2-diphenylhydrazine	211	1		ND	ND	
38. ethylbenzene	211	1				
39. fluoranthene	211	1		ND	ND	
40. 4-chlorophenyl phenyl ether	211	1		ND	ND	
41. 4-bromophenyl phenyl ether	211	1		ND	ND	
42. bis(2-chloroisopropyl)ether	211	1		ND	ND	
43. bis(2-choroethoxy)methane	211	1		ND	ND	
44. methylene chloride	211	1		ND	ND	
45. methyl chloride (chloromethane)	211	1				

Table V-17 (Continued)

TITANIUM SAMPLING DATA
ACID LEACHATE AND RINSE WATER
RAW WASTEWATER

Pollutant	Stream Code	Sample Type†	Concentrations (mg/l) Source	Day 1	Day 2	Day 3
Toxic Pollutants (Continued)						
46. methyl bromide (bromomethane)	211	1				
47. bromoform (tribromomethane)	211	1				
48. dichlorobromomethane	211	1				
49. trichlorofluoromethane	211	1				
50. dichlorodifluoromethane	211	1				
51. chlorodibromomethane	211	1				
52. hexachlorobutadiene	211	1		ND	ND	
53. hexachlorocyclopentadiene	211	1		ND	ND	
54. isophorone	211	1		ND	ND	
55. naphthalene	211	1		ND	ND	
56. nitrobenzene	211	1		ND	ND	
57. 2-nitrophenol	211	1		ND	ND	
58. 4-nitrophenol	211	1		ND	ND	

Table V-17 (Continued)

TITANIUM SAMPLING DATA
ACID LEACHATE AND RINSE WATER
RAW WASTEWATER

Pollutant	Stream Code	Sample Type†	Concentrations (mg/l) Source	Day 1	Day 2	Day 3
Toxic Pollutants (Continued)						
59. 2,4-dinitrophenol	211	1		ND	ND	
60. 4,6-dinitro-o-cresol	211	1		ND	ND	
61. N-nitrosodimethylamine	211	1		ND	ND	
62. N-nitrosodiphenylamine	211	1		ND	ND	
63. N-nitrosodi-n-propylamine	211	1		ND	ND	
64. pentachlorophenol	211	1		ND	ND	
65. phenol	211	1		ND	ND	
66. bis(2-ethylhexyl) phthalate	211	1		0.040	0.03	
67. butyl benzyl phthalate	211	1		ND	ND	
68. di-n-butyl phthalate	211	1		*	*	
69. di-n-octyl phthalate	211	1		ND	ND	
70. diethyl phthalate	211	1		*	*	
71. dimethyl phthalate	211	1		ND	ND	
72. benzo(a)anthracene	211	1		ND	ND	

Table V-17 (Continued)

TITANIUM SAMPLING DATA
ACID LEACHATE AND RINSE WATER
RAW WASTEWATER

Pollutant	Stream Code	Sample Type†	Concentrations (mg/l) Source	Day 1	Day 2	Day 3
Toxic Pollutants (Continued)						
73. benzo(a)pyrene	211	1		ND	ND	
74. benzo(b)fluoranthene	211	1		ND	ND	
75. benzo(k)fluoranthane	211	1		ND	*	
76. chrysene	211	1		ND	ND	
77. acenaphthylene	211	1		ND	ND	
78. anthracene (a)	211	1		ND	ND	
79. benzo(ghi)perylene	211	1		ND	ND	
80. fluorene	211	1		ND	ND	
81. phenanthrene (a)	211	1		ND	ND	
82. dibenzo(a,h)anthracene	211	1		ND	ND	
83. indeno (1,2,3-c,d)pyrene	211	1		ND	ND	
84. pyrene	211	1		ND	ND	
85. tetrachloroethylene	211	1				

Table V-17 (Continued)

TITANIUM SAMPLING DATA
ACID LEACHATE AND RINSE WATER
RAW WASTEWATER

Pollutant	Stream Code	Sample Type†	Concentrations (mg/l) Source	Day 1	Day 2	Day 3
Toxic Pollutants (Continued)						
86. toluene	211	1				
87. trichloroethylene	211	1				
88. vinyl chloride (chloroethylene)	211	1				
89. aldrin	211	1		ND	ND	
90. dieldrin	211	1		ND	ND	
91. chlordane	211	1		ND	ND	
92. 4,4'-DDT	211	1		ND	ND	
93. 4,4'-DDE	211	1		ND	ND	
94. 4,4'-DDD	211	1		ND	0.160	
95. alpha-endosulfan	211	1		ND	0.090	
96. beta-endosulfan	211	1		ND	ND	
97. endosulfan sulfate	211	1		ND	ND	
98. endrin	211	1		ND	ND	
99. endrin aldehyde	211	1		ND	ND	

Table V-17 (Continued)

TITANIUM SAMPLING DATA
ACID LEACHATE AND RINSE WATER
RAW WASTEWATER

Pollutant	Stream Code	Sample Type†	Concentrations (mg/l) Source	Day 1	Day 2	Day 3
Toxic Pollutants (Continued)						
100. heptachlor	211	1		ND	ND	
101. heptachlor epoxide	211	1		ND	ND	
102. alpha-BHC	211	1		**	0.040	
103. beta-BHC	211	1		**	0.030	
104. gamma-BHC	211	1		ND	ND	
105. delta-BHC	211	1		ND	ND	
106. PCB-1242 (b)	211	1		ND	ND	
107. PCB-1254 (b)	211	1		ND	ND	
108. PCB-1221 (b)	211	1		ND	ND	
109. PCB-1232 (c)	211	1		ND	ND	
110. PCB-1248 (c)	211	1		ND	ND	
111. PCB-1260 (c)	211	1		ND	ND	
112. PCB-1016 (c)	211	1		ND	ND	

Table V-17 (Continued)

TITANIUM SAMPLING DATA
ACID LEACHATE AND RINSE WATER
RAW WASTEWATER

Pollutant	Stream Code	Sample Type†	Concentrations (mg/l) Source	Day 1	Day 2	Day 3
Toxic Pollutants (Continued)						
113. toxaphene	211	1		ND	ND	
114. antimony	211	1		0.88	0.83	
115. arsenic	211	1		0.27	0.62	
117. beryllium	211	1		0.002	<0.001	
118. cadmium	211	1		0.21	0.19	
119. chromium (total)	211	1		0.27	0.21	
120. copper	211	1		1.7	0.54	
121. cyanide (total)	211	1		<1	10,000	
122. lead	211	1		2.6	2.9	
123. mercury	211	1		0.001	0.002	
124. nickel	211	1		1.3	1.6	
125. selenium	211	1		0.22	0.19	
126. silver	211	1		1.2	0.29	

Table V-17 (Continued)

TITANIUM SAMPLING DATA
ACID LEACHATE AND RINSE WATER
RAW WASTEWATER

Pollutant	Stream Code	Sample Type†	Concentrations (mg/l) Source	Day 1	Day 2	Day 3
Toxic Pollutants (Continued)						
127. thallium	211	1		3.0	1.7	
128. zinc	211	1		0.67	0.43	
Nonconventional Pollutants						
Phenolics	211	1		19	9.0	
Titanium	211	1		190	1.7	
Conventional Pollutants						
pH (standard units)	211	1		1.9	ND	

†Sample Type Code:
1 - One-time grab
2 - Manual composite during intermittent process operation
3 - 8-hour manual composite
4 - 8-hour automatic composite
5 - 24-hour manual composite
6 - 24-hour automatic composite
A - Anticipated quality if new process implemented.

*Less than 0.01 mg/l.

**Less than 0.005 mg/l.

(a),(b),(c) Reported together

Table V-18

TITANIUM SAMPLING DATA
ACID LEACHATE
RAW WASTEWATER

Pollutant	Stream Code	Sample Type†	Concentrations (mg/l) Source	Day 1	Day 2	Day 3
Toxic Pollutants						
1. acenaphthene	320	1	ND	ND		
2. acrolein	320	1	ND	ND		
3. acrylonitrile	320	1	ND	ND		
4. benzene	320	1	ND	ND		
5. benzidine	320	1	ND	ND		
6. carbon tetrachloride	320	1	ND	ND		
7. chlorobenzene	320	1	ND	ND		
8. 1,2,4-trichlorobenzene	320	1	ND	ND		
9. hexachlorobenzene	320	1	ND	ND		
10. 1,2-dichloroethane	320	1	ND	ND		
11. 1,1,1-trichloroethane	320	1	ND	ND		
12. hexachloroethane	320	1	ND	ND		
13. 1,1-dichloroethane	320	1	ND	ND		

Table V-18 (Continued)

TITANIUM SAMPLING DATA
ACID LEACHATE
RAW WASTEWATER

Pollutant	Stream Code	Sample Type†	Concentrations (mg/l) Source	Day 1	Day 2	Day 3
Toxic Pollutants (Continued)						
14. 1,1,2-trichloroethane	320	1	ND	ND		
15. 1,1,2,2-tetrachloroethane	320	1	ND	ND		
16. chloroethane	320	1	ND	ND		
17. bis(chloromethyl)ether	320	1	ND	ND		
18. bis(2-chloroethyl)ether	320	1	ND	ND		
19. 2-chloroethyl vinyl ether	320	1	ND	ND		
20. 2-chloronaphthalene	320	1	ND	ND		
21. 2,4,6-trichlorophenol	320	1	ND	ND		
22. p-chloro-m-cresol	320	1	ND	ND		
23. chloroform	320	1	0.100	ND		
24. 2-chlorophenol	320	1	ND	ND		
25. 1,2-dichlorobenzene	320	1	ND	ND		
26. 1,3-dichlorobenzene	320	1	ND	ND		
27. 1,4-dichlorobenzene	320	1	ND	ND		

Table V-18 (Continued)

TITANIUM SAMPLING DATA
ACID LEACHATE
RAW WASTEWATER

Pollutant	Stream Code	Sample Type†	Concentrations (mg/l) Source	Day 1	Day 2	Day 3
Toxic Pollutants (Continued)						
28. 3,3'-dichlorobenzidine	320	1	ND	ND		
29. 1,1-dichloroethylene	320	1	ND	ND		
30. 1,2-trans-dichloroethylene	320	1	ND	ND		
31. 2,4-dichlorophenol	320	1	ND	ND		
32. 1,2-dichloropropane	320	1	ND	ND		
33. 1,3-dichloropropene	320	1	ND	ND		
34. 2,4-dimethylphenol	320	1	ND	ND		
35. 2,4-dinitrotoluene	320	1	ND	ND		
36. 2,6-dinitrotoluene	320	1	ND	ND		
37. 1,2-diphenylhydrazine	320	1	ND	ND		
38. ethylbenzene	320	1	ND	ND		
39. fluoranthene	320	1	ND	ND		
40. 4-chlorophenyl phenyl ether	320	1	ND	ND		

Table V-18 (Continued)

TITANIUM SAMPLING DATA
ACID LEACHATE
RAW WASTEWATER

Pollutant	Stream Code	Sample Type†	Concentrations (mg/l) Source	Day 1	Day 2	Day 3
Toxic Pollutants (Continued)						
41. 4-bromophenyl phenyl ether	320	1	ND	ND		
42. bis(2-chloroisopropyl)ether	320	1	ND	ND		
43. bis(2-chloroethoxy)methane	320	1	ND	ND		
44. methylene chloride	320	1	0.010	0.410		
45. methyl chloride (chloromethane)	320	1	ND	ND		
46. methyl bromide (bromomethane)	320	1	ND	ND		
47. bromoform (tribromomethane)	320	1	ND	ND		
48. dichlorobromomethane	320	1	0.050	ND		
49. trichlorofluoromethane	320	1	ND	ND		
50. dichlorodifluoromethane	320	1	ND	ND		
51. chlorodibromomethane	320	1	*	ND		
52. hexachlorobutadiene	320	1	ND	ND		
52. hexachlorocyclopentadiene	320	1	ND	ND		
54. isophorone	320	1	ND	ND		

Table V-18 (Continued)

TITANIUM SAMPLING DATA
ACID LEACHATE
RAW WASTEWATER

Pollutant	Stream Code	Sample Type†	Concentrations (mg/l) Source	Day 1	Day 2	Day 3
Toxic Pollutants (Continued)						
55. naphthalene	320	1	ND	ND		
56. nitrobenzene	320	1	ND	ND		
57. 2-nitrophenol	320	1	ND	ND		
58. 4-nitrophenol	320	1	ND	ND		
59. 2,4-dinitrophenol	320	1	ND	ND		
60. 4,6-dinitro-o-cresol	320	1	ND	ND		
61. N-nitrosodimethylamine	320	1	ND	ND		
62. N-nitrosodiphenylamine	320	1	ND	ND		
63. N-nitrosodi-n-propylamine	320	1	ND	ND		
64. pentachlorophenol	320	1	ND	*		
65. phenol	320	1	ND	*		
66. bis(2-ethylhexyl) phthalate	320	1	*	*		
67. butyl benzyl phthalate	320	1	ND	*		

Table V-18 (Continued)

TITANIUM SAMPLING DATA
ACID LEACHATE
RAW WASTEWATER

Pollutant	Stream Code	Sample Type†	Concentrations (mg/l) Source	Day 1	Day 2	Day 3
Toxic Pollutants (Continued)						
68. di-n-butyl phthalate	320	1	*	*		
69. di-n-octyl phthalate	320	1	ND	ND		
70. diethyl phthalate	320	1	*	ND		
71. dimethyl phthalate	320	1	ND	ND		
72. benzo(a)anthracene	320	1	ND	ND		
73. benzo(a)pyrene	320	1	ND	ND		
74. benzo(b)fluoranthene	320	1	ND	ND		
75. benzo(k)fluoranthane	320	1	ND	ND		
76. chrysene	320	1	ND	ND		
77. acenaphthylene	320	1	ND	ND		
78. anthracene (a)	320	1	ND	ND		
79. benzo(ghi)perylene	320	1	ND	ND		
80. fluorene	320	1	ND	ND		
81. phenanthrene (a)	320	1	ND	ND		

Table V-18 (Continued)

TITANIUM SAMPLING DATA
ACID LEACHATE
RAW WASTEWATER

Pollutant	Stream Code	Sample Type†	Concentrations (mg/l) Source	Day 1	Day 2	Day 3
Toxic Pollutants (Continued)						
82. dibenzo(a,h)anthracene	320	1	ND	ND		
83. indeno (1,2,3-c,d)pyrene	320	1	ND	ND		
84. pyrene	320	1	ND	ND		
85. tetrachloroethylene	320	1	ND	ND		
86. toluene	320	1	*	0.067		
87. trichloroethylene	320	1	ND	ND		
88. vinyl chloride (chloroethylene)	320	1	ND	ND		
89. aldrin	320	1	ND	ND		
90. dieldrin	320	1	ND	ND		
91. chlordane	320	1	ND	ND		
92. 4,4'-DDT	320	1	ND	ND		
93. 4,4'-DDE	320	1	ND	ND		
94. 4,4'-DDD	320	1	ND	ND		

Table V-18 (Continued)

TITANIUM SAMPLING DATA
ACID LEACHATE
RAW WASTEWATER

Pollutant	Stream Code	Sample Type†	Concentrations (mg/l) Source	Day 1	Day 2	Day 3
Toxic Pollutants (Continued)						
95. alpha-endosulfan	320	1	ND	ND		
96. beta-endosulfan	320	1	ND	ND		
97. endosulfan sulfate	320	1	ND	ND		
98. endrin	320	1	ND	ND		
99. endrin aldehyde	320	1	ND	ND		
100. heptachlor	320	1	ND	ND		
101. heptachlor epoxide	320	1	ND	ND		
102. alpha-BHC	320	1	ND	ND		
103. beta-BHC	320	1	ND	ND		
104. gamma-BHC	320	1	ND	ND		
105. delta-BHC	320	1	ND	ND		
106. PCB-1242 (b)	320	1	ND	ND		
107. PCB-1254 (b)	320	1	ND	ND		
108. PCB-1221 (b)	320	1	ND	ND		

Table V-18 (Continued)

TITANIUM SAMPLING DATA
ACID LEACHATE
RAW WASTEWATER

Pollutant	Stream Code	Sample Type†	Concentrations (mg/l) Source	Day 1	Day 2	Day 3
Toxic Pollutants (Continued)						
109. PCB-1232 (c)	320	1	ND	ND		
110. PCB-1248 (c)	320	1	ND	ND		
111. PCB-1260 (c)	320	1	ND	ND		
112. PCB-1016 (c)	320	1	ND	ND		
113. toxaphene	320	1	ND	ND		
114. antimony	320	1	<0.003	0.027		
115. arsenic	320	1	0.004	0.060		
117. beryllium	320	1	<0.0002	<0.0002		
118. cadmium	320	1	0.020	0.28		
119. chromium (total)	320	1	0.040	0.30		
120. copper	320	1	0.060	0.58		
121. cyanide (total)	320	1	0.008	0.010		
122. lead	320	1	0.14	4.0		
123. mercury	320	1	<0.0002	<0.0002		

Table V-18 (Continued)

TITANIUM SAMPLING DATA
ACID LEACHATE
RAW WASTEWATER

Pollutant	Stream Code	Sample Type†	Concentrations (mg/l) Source	Day 1	Day 2	Day 3
Toxic Pollutants (Continued)						
124. nickel	320	1	0.075	2.6		
125. selenium	320	1	<0.002	0.009		
126. silver	320	1	<0.0002	0.0014		
127. thallium	320	1	<0.001	3.8		
128. zinc	320	1	0.90	0.48		
Nonconventional Pollutants						
Fluoride	320	1	1.4	0.76		
Phenolics	320	1	14	<0.1		
Conventional Pollutants						
Oil and Grease	320	1	1.1	3.2		
Total Suspended Solids (TSS)	320	1	0	320		
pH (standard units)	320	1		0.6		

Table V-18 (Continued)

TITANIUM SAMPLING DATA
ACID LEACHATE
RAW WASTEWATER

†Sample Type Code:
1 - One-time grab
2 - Manual composite during intermittent process operation
3 - 8-hour manual composite
4 - 8-hour automatic composite
5 - 24-hour manual composite
6 - 24-hour automatic composite
A - Anticipated quality if new process implemented.

*Less than 0.01 mg/l.

(a),(b),(c) Reported together

Table V-19

TITANIUM SAMPLING DATA
LEACHING RINSE WATER
RAW WASTEWATER

Pollutant	Stream Code	Sample Type†	Concentrations (mg/l) Source	Day 1	Day 2	Day 3
Toxic Pollutants						
1. acenaphthene	319	1	ND	ND		
2. acrolein	319	1	ND	ND		
3. acrylonitrile	319	1	ND	ND		
4. benzene	319	1	ND	ND		
5. benzidine	319	1	ND	ND		
6. carbon tetrachloride	319	1	ND	ND		
7. chlorobenzene	319	1	ND	ND		
8. 1,2,4-trichlorobenzene	319	1	ND	ND		
9. hexachlorobenzene	319	1	ND	ND		
10. 1,2-dichloroethane	319	1	ND	ND		
11. 1,1,1-trichloroethane	319	1	ND	ND		
12. hexachloroethane	319	1	ND	ND		
13. 1,1-dichloroethane	319	1	ND	ND		
14. 1,1,2-trichloroethane	319	1	ND	ND		

Table V-19 (Continued)

TITANIUM SAMPLING DATA
LEACHING RINSE WATER
RAW WASTEWATER

Pollutant	Stream Code	Sample Type†	Concentrations (mg/l) Source	Day 1	Day 2	Day 3
Toxic Pollutants (Continued)						
15. 1,1,2,2-tetrachloroethane	319	1	ND	ND		
16. chloroethane	319	1	ND	ND		
17. bis(chloromethyl)ether	319	1	ND	ND		
18. bis(2-chloroethyl)ether	319	1	ND	ND		
19. 2-chloroethyl vinyl ether	319	1	ND	ND		
20. 2-chloronaphthalene	319	1	ND	ND		
21. 2,4,6-trichlorophenol	319	1	ND	ND		
22. p-chloro-m-cresol	319	1	ND	ND		
23. chloroform	319	1	0.100	ND		
24. 2-chlorophenol	319	1	ND	ND		
25. 1,2-dichlorobenzene	319	1	ND	ND		
26. 1,3-dichlorobenzene	319	1	ND	ND		
27. 1,4-dichlorobenzene	319	1	ND	ND		

Table V-19 (Continued)

TITANIUM SAMPLING DATA
LEACHING RINSE WATER
RAW WASTEWATER

Pollutant	Stream Code	Sample Type†	Concentrations (mg/l) Source	Day 1	Day 2	Day 3
Toxic Pollutants (Continued)						
28. 3,3'-dichlorobenzidine	319	1	ND	ND		
29. 1,1-dichloroethylene	319	1	ND	ND		
30. 1,2-trans-dichloroethylene	319	1	ND	ND		
31. 2,4-dichlorophenol	319	1	ND	ND		
32. 1,2-dichloropropane	319	1	ND	ND		
33. 1,3-dichloropropene	319	1	ND	ND		
34. 2,4-dimethylphenol	319	1	ND	ND		
35. 2,4-dinitrotoluene	319	1	ND	ND		
36. 2,6-dinitrotoluene	319	1	ND	ND		
37. 1,2-diphenylhydrazine	319	1	ND	ND		
38. ethylbenzene	319	1	ND	ND		
39. fluoranthene	319	1	ND	ND		
40. 4-chlorophenyl phenyl ether	319	1	ND	ND		
41. 4-bromophenyl phenyl ether	319	1	ND	ND		

Table V-19 (Continued)

TITANIUM SAMPLING DATA
LEACHING RINSE WATER
RAW WASTEWATER

Pollutant	Stream Code	Sample Type†	Concentrations (mg/l) Source	Day 1	Day 2	Day 3
Toxic Pollutants (Continued)						
42. bis(2-chloroisopropyl)ether	319	1	ND	ND		
43. bis(2-chloroethoxy)methane	319	1	ND	ND		
44. methylene chloride	319	1	0.010	0.035		
45. methyl chloride (chloromethane)	319	1	ND	ND		
46. methyl bromide (bromomethane)	319	1	ND	ND		
47. bromoform (tribromomethane)	319	1	ND	ND		
48. dichlorobromomethane	319	1	0.050	ND		
49. trichlorofluoromethane	319	1	ND	ND		
50. dichlorodifluoromethane	319	1	ND	ND		
51. chlorodibromomethane	319	1	*	ND		
52. hexachlorobutadiene	319	1	ND	ND		
53. hexachlorocyclopentadiene	319	1	ND	ND		
54. isophorone	319	1	ND	ND		

Table V-19 (Continued)

TITANIUM SAMPLING DATA
LEACHING RINSE WATER
RAW WASTEWATER

Pollutant	Stream Code	Sample Type†	Concentrations (mg/l) Source	Day 1	Day 2	Day 3
Toxic Pollutants (Continued)						
55. naphthalene	319	1	ND	ND		
56. nitrobenzene	319	1	ND	ND		
57. 2-nitrophenol	319	1	ND	ND		
58. 4-nitrophenol	319	1	ND	ND		
59. 2,4-dinitrophenol	319	1	ND	ND		
60. 4,6-dinitro-o-cresol	319	1	ND	ND		
61. N-nitrosodimethylamine	319	1	ND	ND		
62. N-nitrosodiphenylamine	319	1	ND	ND		
63. N-nitrosodi-n-propylamine	319	1	ND	ND		
64. pentachlorophenol	319	1	ND	ND		
65. phenol	319	1	ND	*		
66. bis(2-ethylhexyl) phthalate	319	1	*	ND		
67. butyl benzyl phthalate	319	1	ND	ND		
68. di-n-butyl phthalate	319	1	*	ND		

Table V-19 (Continued)

TITANIUM SAMPLING DATA
LEACHING RINSE WATER
RAW WASTEWATER

Pollutant	Stream Code	Sample Type†	Concentrations (mg/l) Source	Day 1	Day 2	Day 3
Toxic Pollutants (Continued)						
69. di-n-octyl phthalate	319	1	ND	ND		
70. diethyl phthalate	319	1	*	ND		
71. dimethyl phthalate	319	1	ND	ND		
72. benzo(a)anthracene	319	1	ND	ND		
73. benzo(a)pyrene	319	1	ND	ND		
74. benzo(b)fluoranthene	319	1	ND	ND		
75. benzo(k)fluoranthane	319	1	ND	ND		
76. chrysene	319	1	ND	ND		
77. acenaphthylene	319	1	ND	ND		
78. anthracene (a)	319	1	ND	ND		
79. benzo(ghi)perylene	319	1	ND	ND		
80. fluorene	319	1	ND	ND		
81. phenanthrene (a)	319	1	ND	ND		

Table V-19 (Continued)

TITANIUM SAMPLING DATA
LEACHING RINSE WATER
RAW WASTEWATER

Pollutant	Stream Code	Sample Type†	Concentrations (mg/l) Source	Day 1	Day 2	Day 3
Toxic Pollutants (Continued)						
82. dibenzo(a,h)anthracene	319	1	ND	ND		
83. indeno (1,2,3-c,d)pyrene	319	1	ND	ND		
84. pyrene	319	1	ND	ND		
85. tetrachloroethylene	319	1	ND	ND		
86. toluene	319	1	*	*		
87. trichloroethylene	319	1	ND	ND		
88. vinyl chloride (chloroethylene)	319	1	ND	ND		
89. aldrin	319	1	ND	ND		
90. dieldrin	319	1	ND	ND		
91. chlordane	319	1	ND	ND		
92. 4,4'-DDT	319	1	ND	ND		
93. 4,4'-DDE	319	1	ND	ND		
94. 4,4'-DDD	319	1	ND	ND		
95. alpha-endosulfan	319	1	ND	ND		

Table V-19 (Continued)

TITANIUM SAMPLING DATA
LEACHING RINSE WATER
RAW WASTEWATER

Pollutant	Stream Code	Sample Type†	Concentrations (mg/l) Source	Day 1	Day 2	Day 3
Toxic Pollutants (Continued)						
96. beta-endosulfan	319	1	ND	ND		
97. endosulfan sulfate	319	1	ND	ND		
98. endrin	319	1	ND	ND		
99. endrin aldehyde	319	1	ND	ND		
100. heptachlor	319	1	ND	ND		
101. heptachlor epoxide	319	1	ND	ND		
102. alpha-BHC	319	1	ND	ND		
103. beta-BHC	319	1	ND	ND		
104. gamma-BHC	319	1	ND	ND		
105. delta-BHC	319	1	ND	ND		
106. PCB-1242 (b)	319	1	ND	ND		
107. PCB-1254 (b)	319	1	ND	**		
108. PCB-1221 (b)	319	1	ND	ND		

Table V-19 (Continued)

TITANIUM SAMPLING DATA
LEACHING RINSE WATER
RAW WASTEWATER

Pollutant	Stream Code	Sample Type†	Concentrations (mg/l) Source	Day 1	Day 2	Day 3
Toxic Pollutants (Continued)						
109. PCB-1232 (c)	319	1	ND	ND		
110. PCB-1248 (c)	319	1	ND	ND		
111. PCB-1260 (c)	319	1	ND	ND		
112. PCB-1016 (c)	319	1	ND	ND		
113. toxaphene	319	1	ND	ND		
114. antimony	319	1	<0.003	0.074		
115. arsenic	319	1	0.004	0.100		
117. beryllium	319	1	<0.0002	<0.0002		
118. cadmium	319	1	0.020	0.16		
119. chromium (total)	319	1	0.040	1.2		
120. copper	319	1	0.060	2.9		
121. cyanide (total)	319	1	0.008	0.009		
122. lead	319	1	0.14	2.8		
123. mercury	319	1	<0.0002	<0.0002		

Table V-19 (Continued)

TITANIUM SAMPLING DATA
LEACHING RINSE WATER
RAW WASTEWATER

Pollutant	Stream Code	Sample Type†	Concentrations (mg/l) Source	Day 1	Day 2	Day 3
Toxic Pollutants (Continued)						
124. nickel	319	1	0.075	7.0		
125. selenium	319	1	<0.002	0.014		
126. silver	319	1	<0.0002	0.034		
127. thallium	319	1	<0.001	2.4		
128. zinc	319	1	0.090	0.54		
Nonconventional Pollutants						
Ammonia Nitrogen	319	1	0.060	0.026		
Fluoride	319	1	1.4	0.99		
Phenolics	319	1	14	6		
Conventional Pollutants						
Total Suspended Solids (TSS)	319	1	0	320		
pH (standard units)	319	1		0.8		

Table V-19 (Continued)

TITANIUM SAMPLING DATA
LEACHING RINSE WATER
RAW WASTEWATER

†Sample Type Code:
1 - One-time grab
2 - Manual composite during intermittent process operation
3 - 8-hour manual composite
4 - 8-hour automatic composite
5 - 24-hour manual composite
6 - 24-hour automatic composite
A - Anticipated quality if new process implemented.

*Less than 0.01 mg/l.

**Less than 0.005 mg/l.

(a),(b),(c) Reported together

Table V-20

TITANIUM SAMPLING DATA
TREATED EFFLUENT

Pollutant	Stream Code	Sample Type†	Concentrations (mg/l) Source	Day 1	Day 2	Day 3
Toxic Pollutants						
1. acenaphthene	240	1		ND	ND	
2. acrolein	240	1		ND	ND	
3. acrylonitrile	240	1		ND		
4. benzene	240	1		*	*	
5. benzidine	240	1		ND	ND	
6. carbon tetrachloride	240	1		ND	*	
7. chlorobenzene	240	1		ND	ND	
8. 1,2,4-trichlorobenzene	240	1		ND	ND	
9. hexachlorobenzene	240	1		ND	ND	
10. 1,2-dichloroethane	240	1		ND	ND	
11. 1,1,1-trichloroethane	240	1		*	*	
12. hexachloroethane	240	1		ND	ND	
13. 1,1-dichloroethane	240	1		ND	ND	
14. 1,1,2-trichloroethane	240	1		ND	ND	

Table V-20 (Continued)

TITANIUM SAMPLING DATA
TREATED EFFLUENT

Pollutant	Stream Code	Sample Type†	Concentrations (mg/l) Source	Day 1	Day 2	Day 3
Toxic Pollutants (Continued)						
15. 1,1,2,2-tetrachloroethane	240	1		ND	ND	
16. chloroethane	240	1		ND	ND	
17. bis(chloromethyl)ether	240	1		ND	ND	
18. bis(2-chloroethyl)ether	240	1		ND	ND	
19. 2-chloroethyl vinyl ether	240	1		ND	ND	
20. 2-chloronaphthalene	240	1		ND	ND	
21. 2,4,6-trichlorophenol	240	1		ND	ND	
22. p-chloro-m-cresol	240	1		ND	ND	
23. chloroform	240	1		ND	ND	
24. 2-chlorophenol	240	1		ND	ND	
25. 1,2-dichlorobenzene	240	1		ND	ND	
26. 1,3-dichlorobenzene	240	1		ND	ND	
27. 1,4-dichlorobenzene	240	1		ND	ND	
28. 3,3'-dichlorobenzidine	240	1		ND	ND	

Table V-20 (Continued)

TITANIUM SAMPLING DATA
TREATED EFFLUENT

Pollutant	Stream Code	Sample Type†	Concentrations (mg/l) Source	Day 1	Day 2	Day 3
Toxic Pollutants (Continued)						
29. 1,1-dichloroethylene	240	1		ND	ND	
30. 1,2-trans-dichloroethylene	240	1		ND	ND	
31. 2,4-dichlorophenol	240	1		ND	ND	
32. 1,2-dichloropropane	240	1		ND	ND	
33. 1,3-dichloropropene	240	1		ND	ND	
34. 2,4-dimethylphenol	240	1		ND	ND	
35. 2,4-dinitrotoluene	240	1		ND	ND	
36. 2,6-dinitrotoluene	240	1		ND	ND	
37. 1,2-diphenylhydrazine	240	1		ND	ND	
38. ethylbenzene	240	1		ND	ND	
39. fluoranthene	240	1		ND	ND	
40. 4-chlorophenyl phenyl ether	240	1		ND	ND	
41. 4-bromophenyl phenyl ether	240	1		ND	ND	
42. bis(2-chloroisopropyl)ether	240	1		ND	ND	

Table V-20 (Continued)

TITANIUM SAMPLING DATA
TREATED EFFLUENT

Pollutant	Stream Code	Sample Type†	Concentrations (mg/l) Source	Day 1	Day 2	Day 3
Toxic Pollutants (Continued)						
43. bis(2-chloroethoxy)methane	240	1		ND	ND	
44. methylene chloride	240	1		0.020	*	
45. methyl chloride (chloromethane)	240	1		ND	ND	
46. methyl bromide (bromomethane)	240	1		ND	ND	
47. bromoform (tribromomethane)	240	1		ND	ND	
48. dichlorobromomethane	240	1		ND	ND	
49. trichlorofluoromethane	240	1		ND	ND	
50. dichlorodifluoromethane	240	1		ND	ND	
51. chlorodibromomethane	240	1		ND	ND	
52. hexachlorobutadiene	240	1		ND	ND	
53. hexachlorocyclopentadiene	240	1		ND	ND	
54. isophorone	240	1		ND	ND	
55. naphthalene	240	1		ND	ND	
56. nitrobenzene	240	1		ND	ND	

Table V-20 (Continued)

TITANIUM SAMPLING DATA
TREATED EFFLUENT

Pollutant	Stream Code	Sample Type†	Concentrations (mg/l) Source	Day 1	Day 2	Day 3
Toxic Pollutants (Continued)						
57. 2-nitrophenol	240	1		ND	ND	
58. 4-nitrophenol	240	1		ND	ND	
59. 2,4-dinitrophenol	240	1		ND	ND	
60. 4,6-dinitro-o-cresol	240	1		ND	ND	
61. N-nitrosodimethylamine	240	1		ND	ND	
62. N-nitrosodiphenylamine	240	1		ND	ND	
63. N-nitrosodi-n-propylamine	240	1		ND	ND	
64. pentachlorophenol	240	1		ND	ND	
65. phenol	240	1		ND	ND	ND
66. bis(2-ethylhexyl) phthalate	240	1		*	*	
67. butyl benzyl phthalate	240	1		ND	ND	
68. di-n-butyl phthalate	240	1		*	*	
69. di-n-octyl phthalate	240	1		ND	ND	
70. diethyl phthalate	240	1		ND	*	

Table V-20 (Continued)

TITANIUM SAMPLING DATA
TREATED EFFLUENT

Pollutant	Stream Code	Sample Type†	Concentrations (mg/l) Source	Day 1	Day 2	Day 3
Toxic Pollutants (Continued)						
71. dimethyl phthalate	240	1		ND	ND	
72. benzo(a)anthracene	240	1		ND	ND	
73. benze(a)pyrene	240	1		ND	ND	
74. benzo(b)fluoranthene	240	1		ND	ND	
75. benzo(k)fluoranthane	240	1		ND	ND	
76. chrysene	240	1		ND	ND	
77. acenaphthylene	240	1		ND	ND	
78. anthracene (a)	240	1		ND	ND	
79. benzo(ghi)perylene	240	1		ND	ND	
80. fluorene	240	1		ND	ND	
81. phenanthrene (a)	240	1		ND	ND	
82. dibenzo(a,h)anthracene	240	1		ND	ND	
83. indeno (1,2,3-c,d)pyrene	240	1		ND	ND	
84. pyrene	240	1		ND	ND	

Table V-20 (Continued)

TITANIUM SAMPLING DATA
TREATED EFFLUENT

Pollutant	Stream Code	Sample Type†	Concentrations (mg/l) Source	Day 1	Day 2	Day 3
Toxic Pollutants (Continued)						
85. tetrachloroethylene	240	1		ND	ND	
86. toluene	240	1		ND	ND	
87. trichloroethylene	240	1		ND	ND	
88. vinyl chloride (chloroethylene)	240	1		ND	ND	
89. aldrin	240	1		ND	ND	
90. dieldrin	240	1		ND	ND	
91. chlordane	240	1		ND	ND	
92. 4,4'-DDT	240	1		ND	ND	
93. 4,4'-DDE	240	1		ND	ND	
94. 4,4'-DDD	240	1		ND	ND	
95. alpha-endosulfan	240	1		ND	ND	
96. beta-endosulfan	240	1		ND	ND	
97. endosulfan sulfate	240	1		ND	ND	
98. endrin	240	1		ND	ND	

Table V-20 (Continued)

TITANIUM SAMPLING DATA
TREATED EFFLUENT

Pollutant	Stream Code	Sample Type†	Concentrations (mg/l) Source	Day 1	Day 2	Day 3
Toxic Pollutants (Continued)						
99. endrin aldehyde	240	1		ND	ND	
100. heptachlor	240	1		ND	ND	
101. heptachlor epoxide	240	1		ND	ND	
102. alpha-BHC	240	1		ND	ND	
103. beta-BHC	240	1		ND	ND	
104. gamma-BHC	240	1		ND	ND	
105. delta-BHC	240	1		ND	ND	
106. PCB-1242 (b)	240	1		ND	ND	
107. PCB-1254 (b)	240	1		ND	ND	
108. PCB-1221 (b)	240	1		ND	ND	
109. PCB-1232 (c)	240	1		ND	ND	
110. PCB-1248 (c)	240	1		ND	ND	
111. PCB-1260 (c)	240	1		ND	ND	
112. PCB-1016 (c)	240	1		ND	ND	

Table V-20 (Continued)

TITANIUM SAMPLING DATA
TREATED EFFLUENT

Pollutant	Stream Code	Sample Type†	Concentrations (mg/l) Source	Day 1	Day 2	Day 3
Toxic Pollutants (Continued)						
113. toxaphene	240	1		ND	ND	
114. antimony	240	1		0.031	0.014	
115. arsenic	240	1		<0.001	<0.001	
117. beryllium	240	1		<0.001	<0.001	
118. cadmium	240	1		<0.001	<0.001	
119. chromium (total)	240	1		0.001	<0.001	
120. copper	240	1		0.150	0.140	
121. cyanide (total)	240	1		0.060	0.068	
122. lead	240	1		0.016	0.020	
123. mercury	240	1		0.001	<0.001	
124. nickel	240	1		<0.001	0.11	
125. selenium	240	1		0.065	0.028	
126. silver	240	1		0.016	0.001	
127. thallium	240	1		0.13	0.12	
128. zinc	240	1		0.020	0.050	

Table V-20 (Continued)

TITANIUM SAMPLING DATA
TREATED EFFLUENT

Pollutant	Stream Code	Sample Type†	Concentrations (mg/l) Source	Day 1	Day 2	Day 3
Nonconventional Pollutants						
Ammonia Nitrogen	240	1		1.1	0.38	
Phenolics	240	1		<1	<1	
Titanium	240	1		0.40	1.4	
Conventional Pollutants						
Oil and Grease	240	1		0.9	69	

†Sample Type Code:
1 - One-time grab
2 - Manual composite during intermittent process operation
3 - 8-hour manual composite
4 - 8-hour automatic composite
5 - 24-hour manual composite
6 - 24-hour automatic composite
A - Anticipated quality if new process implemented.

*Less than 0.01 mg/l.

(a),(b),(c) Reported together

TABLE V-21

PRIMARY AND SECONDARY TITANIUM SAMPLING DATA
RAW WASTEWATER SELF-SAMPLING PROGRAM
(Concentration - mg/l)

POLLUTANT	SAMPLE NUMBER					
Toxic Pollutants	88173	88174	88171	88172	M4772	88175
114. antimony	<0.010	0.024	1.260	17.400	<0.500	0.021
117. beryllium	<0.050	<0.050	<0.050	<0.050		<0.050
118. cadmium	0.150	<0.050	0.050	<0.050	<0.010	<0.050
119. chromium	<0.010	<0.100	<0.100	<0.010	<0.010	<0.050
120. copper	<0.100	<0.100	<0.100	<0.100	0.190	<0.100
122. lead	<0.200	<0.200	<0.200	<0.200	<0.030	<0.200
124. nickel	<0.200	<0.200	<0.200	<0.200	<0.010	<0.200
127. thallium	<0.010	<0.010	<0.010	<0.010	2.000	<0.010
128. zinc	<0.050	0.220	<0.050	0.210	0.690	0.070
Nonconventional Pollutants						
aluminum	3.300	27.900	<0.500	9.500		<0.500
cobalt	<0.500	<0.500	<0.500	<0.500	<0.500	<0.500
fluoride					0.300	
iron	14.000	140.000	0.370	27.000		0.840
manganese	<0.050	<0.050	<0.500	0.190		<0.050
molybdenum	<0.500	<0.500	<0.500	<0.500		<0.500
tin	8.000	5.000	<5.000	<5.000		<5.000
titanium	70.000	635.000	69.000	264.000	640.000	10.000
vanadium	3.700	4.800	6.300	89.000		<1.000
TSS					14.000	

Sample No.	Wastewater stream
88173	Chlorination off-gas caustic wet air pollution control
88174	Chlorination off-gas wet air pollution control
88171	Chlorination area-vent caustic wet air pollution control
88172	Chlorination area-vent wet air pollution control
M4772	$TiCl_4$ handling wet air pollution control
88172	Reduction area wet air pollution control

TABLE V-21 (Continued)

PRIMARY AND SECONDARY TITANIUM SAMPLING DATA
RAW WASTEWATER SELF-SAMPLING PROGRAM
(Concentration - mg/l)

POLLUTANT	SAMPLE NUMBER				
Toxic Pollutants	88141	M4773	M4774	M4775	88177
114. antimony	<0.010	<0.500	<0.500	<0.500	<0.010
117. beryllium	<0.050				<0.050
118. cadmium	<0.050	<0.010	<0.010	<0.010	<0.050
119. chromium	<0.100	0.013	0.054	<0.010	<0.100
120. copper	<0.100	0.025	0.070	0.017	8.500
122. lead	<0.200	<0.030	<0.030	<0.030	1.260
124. nickel	<0.200	0.250	0.210	<0.010	<0.200
127. thallium	<0.010	<0.100	4.500	0.600	<0.010
128. zinc	0.230	0.073	0.150	0.190	2.600
Nonconventional Pollutants					
aluminum	<0.500				55.100
cobalt	<0.500				<0.500
fluoride		0.400	0.260	0.960	
iron	1.090				1.940
manganese	<0.050				2.540
molybdenum	<0.500				<0.500
tin	<5.000				0.500
titanium	3.200	13.000	40.000	<1.000	19.500
vanadium	<1.000				1.600
TSS		121.00	1132.00		

Sample No.	Wastewater stream
88141	Reduction area wet air pollution control,
M4773	Sodium reduction container reconditioning wash water,
M4774	Chip crushing wet air pollution control,
M4775	Sponge crushing and screening wet air pollution control
88177	Casting crucible wash water

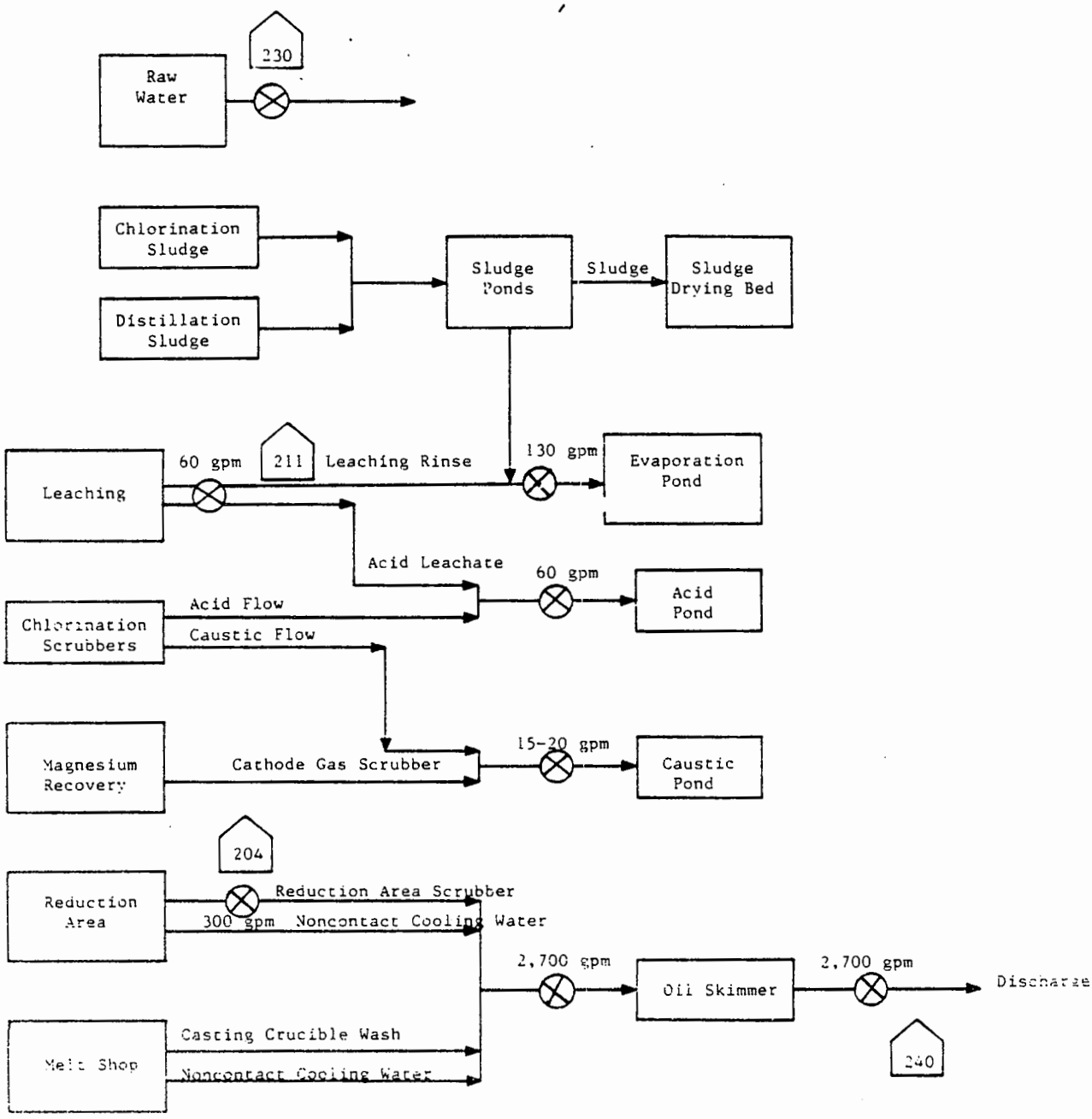

Figure V-1

SAMPLING SITES AT TITANIUM PLANT B

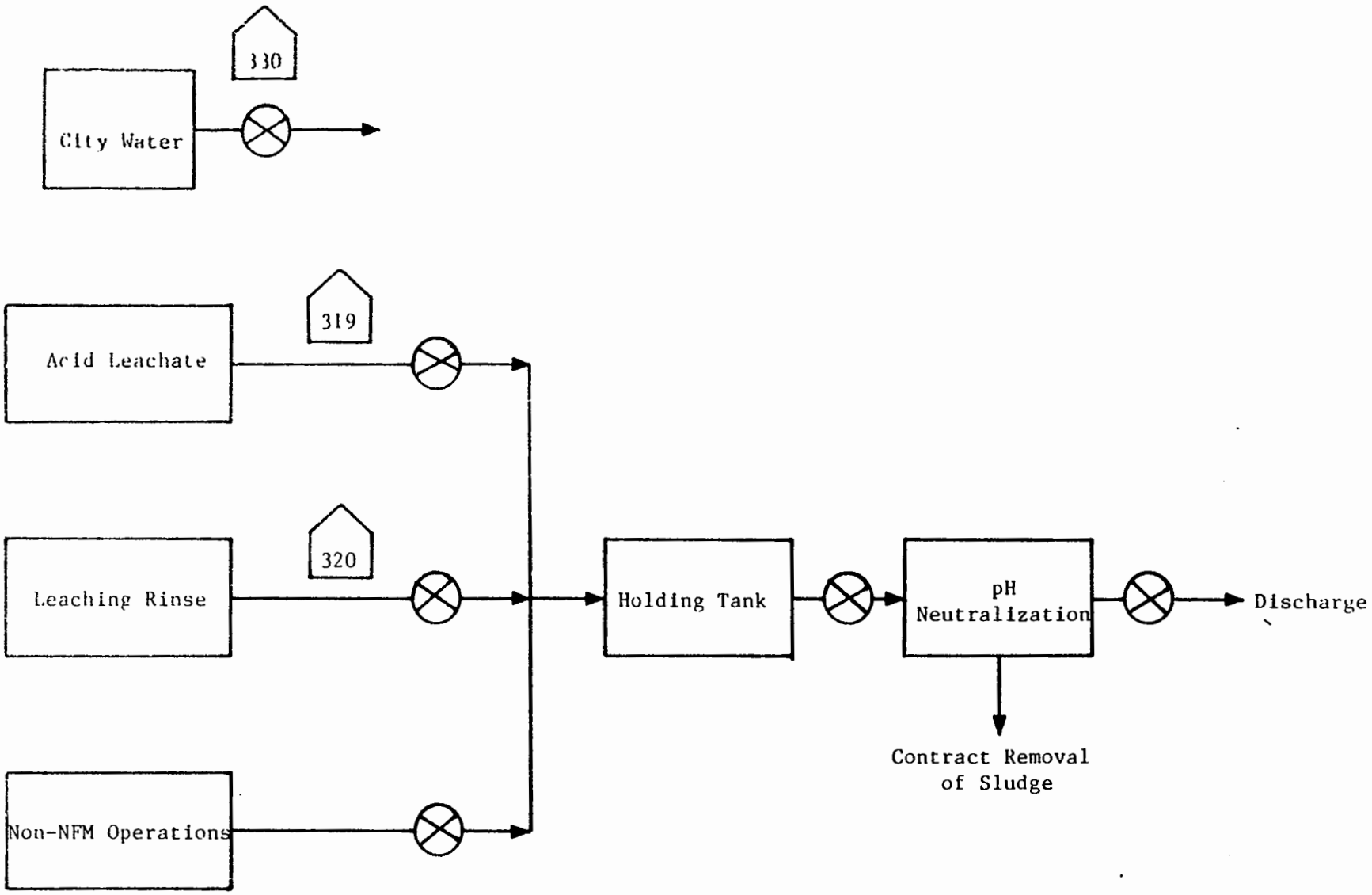

Figure V-2

SAMPLING SITES AT TITANIUM PLANT C

SECTION VI

SELECTION OF POLLUTANT PARAMETERS

This section examines the chemical analysis data presented in Section V and discusses the selection or exclusion of pollutants for potential limitation. The discussion that follows presents and briefly discusses the selection of conventional and nonconventional pollutants for effluent limitations. Also described is the analysis that was performed to select or exclude priority pollutants for further consideration for limitations and standards. Pollutant will be selected for further consideration if they are present in concentrations treatable by the technologies considered in this analysis. The treatable concentrations used for the priority metals were the long-term performance values achievable by chemical precipitation, sedimentation, and filtration. The treatable concentrations for the priority organics were the long-term performance values achievable by carbon adsorption.

CONVENTIONAL AND NONCONVENTIONAL POLLUTANT PARAMETERS SELECTED

This study considered samples from the primary and secondary titanium subcategory for three conventional pollutant parameters (oil and grease, total suspended solids, and pH) and six nonconventional pollutant parameters (ammonia, chloride, fluoride, magnesium, phenolics (4AAP), and titanium).

The conventional and nonconventional pollutants or pollutant parameters selected for limitation in this subcategory are:

titanium
oil and grease
total suspended solids (TSS)
pH

Based on an examination of the raw materials and production processes employed in the primary and secondary titanium subcategory, it is expected that treatable concentrations of titanium are present in the wastewater generated in this subcategory. Titanium is soluble in dilute acid, and acid solutions are commonly used in primary and secondary titanium processing operations. In addition, titanium may be present as suspended particulates from powder cleaning operations. Therefore, titanium is selected for limitation in this subcategory.

The principal sources of oil and grease in this subcategory are the scrap washing and casting operations. Oil and grease concentrations in a total of three samples range from 3.2 to 190 mg/l. Two of the three concentrations are greater than the 10

mg/l concentration considered achievable by identified treatment technology. Thus, oil and grease is selected for limitation.

Total suspended solids (TSS) concentrations in 11 samples range from less than 1 mg/l to 330 mg/l. Nine of the observed concentrations are greater than the 2.6 mg/l concentration considered achievable by identified treatment technology. Most of the methods used to remove toxic metals do so by converting these metals to precipitates. Meeting a limitation on total suspended solids ensures that sedimentation to remove precipitated toxic metals has been effective. For these reasons, total suspended solids are selected for limitation in this subcategory.

The pH values observed ranged from 0.1 to 7.4. Effective removal of toxic metals by precipitation requires careful control of pH. Therefore, pH is selected for limitation in this subcategory.

TOXIC PRIORITY POLLUTANTS

The frequency of occurrence of the priority pollutants in the wastewater samples taken is presented in Table VI-1 (page 4937). These data provide the basis for the categorization of specific pollutants, as discussed below. Table VI-1 is based on the raw wastewater data from streams 204, 211, 319, and 320 (see Section V) and from data for seven wastewater streams. Treatment plant and source water samples were not considered in this frequency count.

TOXIC POLLUTANTS NEVER DETECTED

The toxic pollutants listed in Table VI-2 (page 4941) were not detected in any wastewater samples from this subcategory. Therefore, they are not selected for consideration in establishing regulations.

TOXIC POLLUTANTS NEVER FOUND ABOVE THEIR ANALYTICAL QUANTIFICATION CONCENTRATION

The priority pollutants listed below were never found above their analytical quantification concentration in any wastewater samples from this subcategory; therefore, they are not selected for consideration in establishing effluent limitations and standards.

13. 1,1-dichloroethane
21. 2,4,6-trichlorophenol
23. chloroform (trichloromethane)
31. 2,4-dichlorophenol
36. 2,6-dinitrotoluene
48. dichlorobromomethane
51. chlorodibromomethane
57. 2-nitrophenol
70. diethyl phthalate
71. diemethyl phthalate
75. benzo(k)fluoranthene (11, 12-benzofluoranthene)

88. vinyl chloride (chloroethylene)
107. PCB-1254 (Arochlor 1254)
117. beryllium

TOXIC POLLUTANTS PRESENT BELOW CONCENTRATIONS ACHIEVABLE BY TREATMENT

The pollutant listed below is not selected for consideration in establishing limitations because it was not found in any wastewater samples from this subcategory above concentrations considered achievable by existing or available treatment technologies.

123. Mercury

Mercury was detected above its analytical quantification limit in seven of 14 samples from three plants. These samples were below the 0.036 mg/l concentration considered achievable by identified treatment technology. Therefore, mercury is not selected for limitation.

TOXIC POLLUTANTS DETECTED IN A SMALL NUMBER OF SOURCES

The following pollutants are not selected for limitation because they are detectable in the effluent from only a small number of sources within the subcategory and are uniquely related to only those sources.

4. benzene
11. 1,1,1-trichloroethane
44. methylene chloride
64. pentachlorophenol
65. phenol
66. bis(2-ethylhexyl) phthalate
67. butyl benzyl phthalate
68. di-n-butyl phthalate
69. di-n-octyl phthalate
86. toluene
87. trichloroethylene
94. 4,4'-DDD(p,p'TDE)
95. a-endosulfan-Alpha
102. Alpha - BHC
103. Beta - BHC
115. arsenic
121. cyanide
125. selenium
126. silver

Although these pollutants are not selected for consideration in establishing nationwide limitations, it may be appropriate, on a case-by-case basis, for the local permit writer to specify effluent limitations.

Benzene was found above its treatable concentration of 0.01 mg/l in eight of 12 samples. The maximum observed concentration is

0.05 mg/l. The Agency has no reason to believe that treatable concentrations of benzene should be present in primary and secondary titanium wastewaters. For this reason, and because benzene was also detected in the source water, benzene is not selected for limitation.

1,1,1-Trichloroethane was found in concentrations above its analytical quantification limit in three of 13 samples from three plants. All three of these samples were from a single plant and had concentrations above the 0.01 mg/l concentration considered achievable by identified treatment technology. Because it was found at only one plant, indicating that the pollutant is probably site-specific, 1, 1, 1-trichloroethane is not selected for limitation.

Methylene chloride was found above its treatable concentration in 8 of 13 samples from three plants at a maximum concentration of 0.410 mg/l. This pollutant is not attributable to specific materials or processes associated with titanium production. It is, however, a common solvent used in analytical laboratories. Since the possibility of sample contamination is likely, methylene chloride is not selected for limitation.

Pentachlorophenol was found at a concentration above its analytical quantification limit in one of 15 samples from three plants. This sample had a concentration above the 0.01 mg/l concentration considered achievable by identified treatment technology. Because it was found at only one plant, indicating that the pollutant is probably site-specific, pentachlorophenol is not selected for limitation.

Phenol was detected above its treatable concentration of 0.010 mg/l in one out of 15 samples analyzed at a concentration of 0.013 mg/l. Because it was found at a concentration only slightly above treatable, in only one out of fifteen samples, phenol is not selected for regulation.

Bis(2-ethylhexyl) phthalate was found above its treatable concentration of 0.01 mg/l in five of 15 samples from three plants. This compound is a plasticizer commonly used in laboratory and field sampling equipment and is not formed as a by-product in this subcategory. Therefore, bis(2-ethylhexyl) phthalate is not selected for limitation.

Butyl benzyl phthalate was found above its treatable concentration of 0.01 mg/l in two of 15 samples from three plants. This compound is a plasticizer commonly used in laboratory and field sampling equipment and is not formed as a by60product in this subcategory. Therefore, butyl benzyl phthalate is not selected for limitation.

Di-n-butyl phthalate was found above its treatable concentration of 0.01 mg/l in one of 15 samples from three plants. This compound is a plasticizer commonly used in

laboratory and field sampling equipment and is not formed as a by-product in this subcategory. Therefore, di-n-butyl phthalate is not selected for limitation.

Di-n-octyl phthalate was found at a concentration above its analytical quantification limit in one of 15 samples from three plants. This sample had a concentration above the 0.01 mg/l concentration considered achievable by identified treatment technology. Because it was found at only one plant, indicating that the pollutant is probably site-specific, di-n-octyl phthalate is not selected for limitation.

Toluene was found in concentrations above its treatable concentration of 0.01 mg/l in three of 13 samples at a maximum concentration of 0.067 mg/l. Because it was detected at a treatable concentration in only three out of thirteen samples, and because it was also detected in the source water, toluene is not selected for limitation.

Trichloroethylene was found in concentrations above its treatable concentration of 0.01 mg/l in three of 13 samples at a maximum concentration of 0.016 mg/l. For this reason trichloroethylene is not selected for limitation.

4,4'-DDD(p,p'TDE) was found at a concentration above its analytical quantification limit in one of 15 samples from three plants. This sample had a concentration above the 0.01 mg/l concentration considered achievable by identified treatment technology. Because it was found at only one plant, indicating that the pollutant is probably site-specific, 4,4'-DDD(p,p'TDE) is not selected for limitation.

a-Endosulfan-Alpha was found at a concentration above its analytical quantification limit in one of 15 samples from three plants. This sample had a concentration above the 0.01 mg/l concentration considered achievable by identified treatment technology. Because it was found at only one plant, indicating that the pollutant is probably site-specific, a-endosulfan-Alpha is not selected for limitation.

a-BHC-Alpha was found at a concentration above its analytical quantification limit in one of 15 samples from three plants. This sample had a concentration above the 0.01 mg/l concentration considered achievable by identified treatment technology. Because it was found at only one plant, indicating that the pollutant is probably site-specific, a-BHC-Alpha is not selected for limitation.

b-BHC-Beta was found at a concentration above its analytical quantification limit in one of 15 samples from three plants. This sample had a concentration above the 0.01 mg/l concentration considered achievable by identified treatment technology. Because it was found at only one plant, indicating that the pollutant is probably site-specific, a-BHC-Beta is not selected for limitation.

Arsenic was found in concentrations above its analytical quantification limit in seven of 14 samples from three plants. Only one of the seven samples had a concentration above the 0.34 mg/l concentration considered achievable by identified treatment technology. Because it was found at only one plant, indicating that the pollutant is probably site-specific, arsenic is not selected for limitation.

Cyanide was found in concentrations above its analytical quantification limit in three of 14 samples from three plants. Two of the samples from two plants had concentrations above the 0.047 mg/l concentration considered achievable by identified treatment technology. A recorded value of 10,000 mg/l for one of these samples is believed to be in error because a sample taken at the same point on the next day had a cyanide concentration of less than 1 mg/l. Because it was found above treatable levels only once in the remaining samples, cyanide is not selected for limitation.

Selenium was found in concentrations above its analytical quantification limit in five of 14 samples from three plants. Only one of the five samples had a concentration above the 0.20 mg/l concentration considered achievable by identified treatment technology. Because it was found at only one plant, indicating that the pollutant is probably site-specific, selenium is not selected for limitation.

Silver was found in concentrations above its analytical quantification limit in three of 14 samples from three plants. Two of the three samples, both of which were from a single plant, had concentrations above the 0.07 mg/l concentration considered achievable by identified treatment technology. Because it was found at only one plant, indicating that the pollutant is probably site-specific, silver is not selected for limitation.

PRIORITY POLLUTANTS SELECTED FOR FURTHER CONSIDERATION IN ESTABLISHING LIMITATIONS AND STANDARDS

The priority pollutants listed below have been detected in quantities above their treatability concentrations. All these pollutants are under consideration to be selected in establishing limitations and standards for this subcategory. The priority pollutants listed below are each discussed following the list.

114. antimony
118. cadmium
119. chromium (Total)
120. copper
122. lead
124. nickel
127. thallium
128. zinc

Antimony was found above its analytical quantification limit in three of 14 samples from three plants with concentrations ranging from 0.83 to 0.95 mg/l. All three of those samples, representing two plants, were above the 0.47 mg/l treatability concentration. Therefore, antimony is selected for further consideration for limitation.

Cadmium was found above its analytical quantification limit in six of 14 samples from three plants with concentrations ranging from 0.002 to 0.28 mg/l. Five of those samples, representing three plants, were above the 0.049 mg/l treatability concentration. Therefore, cadmium is selected for further consideration for limitation.

Chromium was found above its analytical quantification limit in 12 of 14 samples from three plants with concentrations ranging from 0.008 to 240 mg/l. Eight of those samples, representing three plants, were above the 0.07 mg/l treatability concentration. Therefore, chromium is selected for further consideration for limitation.

Copper was found above its analytical quantification limit in 12 of 14 samples from three plants with concentrations ranging from 0.009 to 2.9 mg/l. Five of those samples, representing three plants, were above the 0.39 mg/l treatability concentration. Therefore, copper is selected for further consideration for limitation.

Lead was found above its analytical quantification limit in eight of 14 samples from three plants with concentrations ranging from 0.043 to 4.0 mg/l. Six of those samples, representing three plants, were above the 0.08 mg/l treatability concentration. Therefore, lead is selected for further consideration for limitation.

Nickel was found above its analytical quantification limit in 14 of 14 samples from three plants with concentrations ranging from 0.010 to 7.2 mg/l. Eight of those samples, representing three plants, were above the 0.22 mg/l treatability concentration. Therefore, nickel is selected for further consideration for limitation.

Thallium was found above its analytical quantification limit in six of 14 samples from three plants with concentrations ranging from 0.12 to 3.8 mg/l. Five of those samples, representing three plants, were above the 0.34 mg/l treatability concentration. Therefore, thallium is selected for further consideration for limitation.

Zinc was found above its analytical quantification limit in nine of 14 samples from three plants with concentrations ranging from 0.05 to 0.67 mg/l. Six of those samples, representing three plants, were above the 0.23 mg/l treatability concentration. Therefore, zinc is selected for further consideration for limitation.

Table VI-1

FREQUENCY OF OCCURRENCE OF PRIORITY POLLUTANTS
PRIMARY AND SECONDARY TITANIUM
RAW WASTEWATER

Pollutant	Analytical Quantification Concentration (mg/l)(a)	Treatable Concentration (mg/l)(b)	Number of Streams Analyzed	Number of Samples Analyzed	ND	Detected Below Quantification Concentration	Detected Below Treatable Concentration	Detected Above Treatable Concentration
1. acenaphthene	0.010	0.01	12	15	15			
2. acrolein	0.010	0.01	12	13	13			
3. acrylonitrile	0.010	0.01	12	13	13			
4. benzene	0.010	0.01	12	13	3	2		8
5. benzidine	0.010	0.01	12	15	15			
6. carbon tetrachloride	0.010	0.01	12	13	13			
7. chlorobenzene	0.010	0.01	12	13	13			
8. 1,2,4-trichlorobenzene	0.010	0.01	12	14	14			
9. hexachlorobenzene	0.010	0.01	12	15	15			
10. 1,2-dichloroethane	0.010	0.01	12	13	13			
11. 1,1,1-trichloroethane	0.010	0.01	12	13	6	4		3
12. hexachloroethane	0.010	0.01	12	15	15			
13. 1,1-dichloroethane	0.010	0.01	12	13	10	3		
14. 1,1,2-trichloroethane	0.010	0.01	12	13	13			
15. 1,1,2,2-tetrachloroethane	0.010	0.01	12	13	13			
16. chloroethane	0.010	0.01	12	13	13			
17. bis(chloromethyl) ether	0.010	0.01	12	13	13			
18. bis(2-chloroethyl) ether	0.010	0.01	12	15	15			
19. 2-chloroethyl vinyl ether	0.010	0.01	12	13	13			
20. 2-chloronaphthalene	0.010	0.01	12	15	15			
21. 2,4,6-trichlorophenol	0.010	0.01	12	15	14	1		
22. parachlorometa cresol	0.010	0.01	12	15	15			
23. chloroform	0.010	0.01	12	13	7	6		
24. 2-chlorophenol	0.010	0.01	12	15	15			
25. 1,2-dichlorobenzene	0.010	0.01	12	15	15			
26. 1,3-dichlorobenzene	0.010	0.01	12	15	15			
27. 1,4-dichlorobenzene	0.010	0.01	12	15	15			
28. 3,3'-dichlorobenzidine	0.010	0.01	12	15	15			
29. 1,1-dichloroethylene	0.010	0.01	12	13	13			
30. 1,2-trans-dichloroethylene	0.010	0.01	12	13	13			
31. 2,4-dichlorophenol	0.010	0.01	12	15	12	3		
32. 1,2-dichloropropane	0.010	0.01	12	13	13			
33. 1,3-dichloropropylene	0.010	0.01	12	13	13			
34. 2,4-dimethylphenol	0.010	0.01	12	15	15			

Table VI-1 (Continued)

FREQUENCY OF OCCURRENCE OF PRIORITY POLLUTANTS
PRIMARY AND SECONDARY TITANIUM
RAW WASTEWATER

Pollutant	Analytical Quantification Concentration (mg/l)(a)	Treatable Concentration (mg/l)(b)	Number of Streams Analyzed	Number of Samples Analyzed	ND	Detected Below Quantification Concentration	Detected Below Treatable Concentration	Detected Above Treatable Concentration
35. 2,4-dinitrotoluene	0.010	0.01	12	15	15			
36. 2,6-dinitrotoluene	0.010	0.01	12	15	14	1		
37. 1,2-diphenylhydrazine	0.010	0.01	12	15	15			
38. ethylbenzene	0.010	0.01	12	13	13			
39. fluoranthene	0.010	0.01	12	15	15			
40. 4-chlorophenyl phenyl ether	0.010	0.01	12	15	15			
41. 4-bromophenyl phenyl ether	0.010	0.01	12	15	15			
42. bis(2-chloroisopropyl) ether	0.010	0.01	12	15	15			
43. bis(2-chloroethoxy) methane	0.010	0.01	12	15	15			
44. methylene chloride	0.010	0.01	12	13	1	4		8
45. methyl chloride	0.010	0.01	12	13	13			
46. methyl bromide	0.010	0.01	12	13	13			
47. bromoform	0.010	0.01	12	13	13			
48. dichlorobromomethane	0.010	0.01	12	13	12	1		
49. trichlorofluoromethane	0.010	0.01	12	13	13			
50. dichlorodifluoromethane	0.010	0.01	12	13	13			
51. chlorodibromomethane	0.010	0.01	12	13	12	1		
52. hexachlorobutadiene	0.010	0.01	12	15	15			
53. hexachlorocyclopentadiene	0.010	0.01	12	15	15			
54. isophorone	0.010	0.01	12	15	15			
55. naphthalene	0.010	0.01	12	15	15			
56. nitrobenzene	0.010	0.01	12	15	15			
57. 2-nitrophenol	0.010	0.01	12	15	14	1		
58. 4-nitrophenol	0.010	0.01	12	15	15			
59. 2,4-dinitrophenol	0.010	0.01	12	15	15			
60. 4,6-dinitro-o-cresol	0.010	0.01	12	15	15			
61. N-nitrosodimethylamine	0.010	0.01	12	15	15			
62. N-nitrosodiphenylamine	0.010	0.01	12	15	15			
63. N-nitrosodi-n-propylamine	0.010	0.01	12	15	15			
64. pentachlorophenol	0.010	0.01	12	15	13	1		1
65. phenol	0.010	0.01	12	15	6	7	1	1
66. bis(2-ethylhexyl) phthalate	0.010	0.01	12	15	3	7		5

Table VI-1 (Continued)

FREQUENCY OF OCCURRENCE OF PRIORITY POLLUTANTS
PRIMARY AND SECONDARY TITANIUM
RAW WASTEWATER

Pollutant	Analytical Quantification Concentration (mg/l)(a)	Treatable Concentration (mg/l)(b)	Number of Streams Analyzed	Number of Samples Analyzed	ND	Detected Below Quantification Concentration	Detected Below Treatable Concentration	Detected Above Treatable Concentration
67. butyl benzyl phthalate	0.010	0.01	12	15	11	2		2
68. di-n-butyl phthalate	0.010	0.01	12	15	5	9		1
69. di-n-octyl phthalate	0.010	0.01	12	15	14			1
70. diethyl phthalate	0.010	0.01	12	15	10	5		
71. dimethyl phthalate	0.010	0.01	12	15	14	1		
72. benzo(a)anthracene	0.010	0.01	12	15	15			
73. benzo(a)pyrene	0.010	0.01	12	15	15			
74. 3,4-benzofluoranthene	0.010	0.01	12	15	15			
75. benzo(k)fluoranthene	0.010	0.01	12	15	14	1		
76. chrysene	0.010	0.01	12	15	15			
77. acenaphthylene	0.010	0.01	12	15	15			
78. anthracene (c)	0.010	0.01	12	15	15			
79. benzo(ghi)perylene	0.010	0.01	12	15	15			
80. fluorene	0.010	0.01	12	15	15			
81. phenanthrene (c)	0.010	0.01	12	15	15			
82. dibenzo(a,h)anthracene	0.010	0.01	12	15	15			
83. indeno(1,2,3-cd)pyrene	0.010	0.01	12	15	15			
84. pyrene	0.010	0.01	12	15	15			
85. tetrachloroethylene	0.010	0.01	12	13	13			
86. toluene	0.010	0.01	12	13	1	9		3
87. trichloroethylene	0.010	0.01	12	13	9	1		3
88. vinyl chloride	0.010	0.01	12	13	12	1		
89. aldrin	0.005	0.01	12	15	15			
90. dieldrin	0.005	0.01	12	15	15			
91. chlordane	0.005	0.01	12	15	15			
92. 4,4'-DDT	0.005	0.01	12	15	15			
93. 4,4'-DDE	0.005	0.01	12	15	15			
94. 4,4'-DDD	0.005	0.01	12	15	14			1
95. alpha-endosulfan	0.005	0.01	12	15	14			1
96. beta-endosulfan	0.005	0.01	12	15	15			
97. endosulfan sulfate	0.005	0.01	12	15	15			
98. endrin	0.005	0.01	12	15	15			
99. endrin aldehyde	0.005	0.01	12	15	15			
100. heptachlor	0.005	0.01	12	15	15			
101. heptachlor epoxide	0.005	0.01	12	15	15			

Table VI-1 (Continued)

FREQUENCY OF OCCURRENCE OF PRIORITY POLLUTANTS
PRIMARY AND SECONDARY TITANIUM
RAW WASTEWATER

Pollutant	Analytical Quantification Concentration (mg/l)(a)	Treatable Concentration (mg/l)(b)	Number of Streams Analyzed	Number of Samples Analyzed	ND	Detected Below Quantification Concentration	Detected Below Treatable Concentration	Detected Above Treatable Concentration
102. alpha-BHC	0.005	0.01	12	15	13	1		1
103. beta-BHC	0.005	0.01	12	15	13	1		1
104. gamma-BHC	0.005	0.01	12	15	15			
105. delta-BHC	0.005	0.01	12	15	15			
106. PCB-1242 (d)	0.005	0.01	12	15	15			
107. PCB-1254 (d)	0.005	0.01	12	15	14	1		
108. PCB-1221 (d)	0.005	0.01	12	15	15			
109. PCB-1232 (e)	0.005	0.01	12	15	15			
110. PCB-1248 (e)	0.005	0.01	12	15	15			
111. PCB-1260 (e)	0.005	0.01	12	15	15			
112. PCB-1016 (e)	0.005	0.01	12	15	15			
113. toxaphene	0.005	0.01	12	15	15			
114. antimony	0.100	0.47	11	14		11		3
115. arsenic	0.010	0.34	11	14		7	6	1
116. asbestos			0					
117. beryllium	0.010	0.20	11	14		14		
118. cadmium	0.002	0.049	11	14		8	1	5
119. chromium	0.005	0.07	11	14		2	4	8
120. copper	0.009	0.39	11	14		2	7	5
121. cyanide (f)	0.02	0.047	11	14		11	1	2
122. lead	0.020	0.08	11	14		6	2	6
123. mercury	0.0001	0.036	11	14		7	7	
124. nickel	0.005	0.22	11	14			6	8
125. selenium	0.01	0.20	11	14		9	4	1
126. silver	0.02	0.07	11	14		11	1	2
127. thallium	0.100	0.34	11	14		8	1	5
128. zinc	0.050	0.23	11	14		5	3	6
129. 2,3,7,8-tetrachlorodibenzo-p-dioxin (TCDD)			0					

(a) Analytical quantification concentration was reported with the data (see Section V).

(b) Treatable concentrations are based on performance of lime precipitation, sedimentation, and filtration.

(c), (d), (e) Reported together.

(f) Analytical quantification concentration for EPA Method 335.2, Total Cyanide Methods for Chemical Analysis of Water and Wastes, EPA 600/4-79-020, March 1979.

TABLE VI-2

TOXIC POLLUTANTS NEVER DETECTED

1. Acenaphthene
2. Acrolein
3. Acrylonitrile
5. Benzidine
6. Carbon tetrachloride (tetrachloromethane)
7. Chlorobenzene
8. 1,2,4-trichlorobenzene
9. Hexachlorobenzene
10. 1,2-dichloroethane
12. Hexachloroethane
14. 1,1,2-trichloroethane
15. 1,1,2,2-tetrachloroethane
16. Chloroethane
17. Bis (chloromethyl) ether (Deleted)
18. Bis (2-chloroethyl) ether
19. 2-chloroethyl vinyl ether
20. 2-chloronaphthalene
22. Parachlorometa cresol
24. 2-chlorophenol
25. 1,2-dichlorobenzene
26. 1,3-dichlorobenzene
27. 1,4-dichlorobenzene
28. 3,3-dichlorobenzidine
29. 1,1-dichloroethylene
30. 1,2-trans-dichloroethylene
32. 1,2-dichloropropane
33. 1,2-dichloropropylene (1,360dichloropropene)
34. 2,4-dimethylphenol
35. 2,4-dinitrotoluene
37. 1,2-diphenylhydrazine
38. Ethylbenzene
39. Fluoranthene
40. 4-chlorophenyl phenyl ether
41. 4-bromophenyl phenyl ether
42. Bis (2-chloroisopropyl) ether
43. Bis (2-chloroethoxy) methane
45. Methyl chloride (dichloromethane)
46. Methyl bromide (bromomethane)
47. Bromoform (tribromomethane)
49. Trichlorofluoromethane (Deleted)
50. Dichlorodifluoromethane (Deleted)
52. Hexachlorobutadiene
53. Hexachlorocyclopentadiene
54. Isophorone
55. Napnthalene
56. Nitrobenzene
58. 4-nitrophenol
59. 2,4-dinitrophenol

TABLE VI-2 (Continued)

TOXIC POLLUTANTS NEVER DETECTED

60. 4,6-dinitro-o-cresol
61. N-nitrosodimethylamine
62. N-nitrosodiphenylamine
63. N-nitrosodi60n60propylamine
72. Benzo(a)anthracene (1,2-benzanthracene)
73. Benzo(a)pyrene (3,4-benzopyrene)
74. 3,4-benzofluroanthene
76. Chrysene
77. Acenaphthylene
78. Anthracene
79. Benzo(ghi)perylene (1, 12-benzoperylene)
80. Fluorene
81. Phenanthene
82. Dibenzo(a,h)anthracene (1,2,5,6-dibenzanthracene)
83. Indeno (1,2,-cd)pyrene (2,3-o-phenylenepyrene)
84. Pyrene
85. Tetrachloroethylene
89. Aldrin
90. Dieldrin
91. Chlordane (technical mixture and metabolities)
92. 4,4'-DDT
93. 4,4'-DDE(p,p'DDX)
96. B-endosulfan-Beta
97. Endosulfan sulfate
98. Endrin
99. Endrin aldehyde
100. Heptachlor
101. Heptachlor epoxide
104. Gamma - BHC (lindane)
105. Delta - BHC
106. PCB-1242 (Arochlor 1242)
108. PCB-1221 (Arochlor 1221)
109. PCB-1232 (Arochlor 1232)
110. PCB-1248 (Arochlor 1248)
111. PCB-1260 (Arochlor 1260)
112. PCB-1016 (Arochlor 1016)
113. Toxaphene
116. Asbestos
129. 2,3,7,8-tetra chlorodibenzo-p-dioxin (TCDD)

THIS PAGE INTENTIONALLY LEFT BLANK

SECTION VII

CONTROL AND TREATMENT TECHNOLOGIES

The preceding sections of this supplement discussed the sources, flows, and characteristics of the wastewaters generated in the primary and secondary titanium subcategory. This section summarizes the description of these wastewaters and indicates the level of treatment which is currently practiced for each waste stream. This section also presents the control and treatment technology options which were examined by the Agency for possible application to the primary and secondary titanium subcategory.

CURRENT CONTROL AND TREATMENT PRACTICES

This section presents a summary of the control and treatment technologies that are currently applied to each of the sources generating wastewater in this subcategory. As discussed in Section V, wastewater associated with the primary and secondary titanium subcategory is characterized by the presence of the priority metal pollutants, suspended solids, and oil and grease. This analysis is supported by the raw (untreated) wastewater data presented for specific sources as well as combined waste streams in Section V. Generally, these pollutants are present in each of the waste streams at concentrations above treatability, and these waste streams are commonly combined for treatment. Construction of one wastewater treatment system for combined treatment allows plants to take advantage of economies of scale, and in some instances, to combine streams of differing alkalinity to reduce treatment chemical requirements. Five plants in this subcategory currently have combined treatment systems, two of which consist of lime precipitation and sedimentation. Three options have been selected for consideration for BPT, BAT, NSPS, and pretreatment in this subcategory, based on combined treatment of these compatible waste streams.

CHLORINATION OFF-GAS WET AIR POLLUTION CONTROL

After rutile ore is chlorinated, titanium tetrachloride is recovered from the chlorination off-gases by fractional distillation using a series of condensers. Wet air pollution control equipment is used at two plants to remove chlorine gas and particulates. One of these plants achieves zero discharge of this stream by reuse in other processes. The other plant discharges this stream to a sewer after pH adjustment and sedimentation. That plant does not recycle this wastewater.

CHLORINATION AREA-VENT WET AIR POLLUTION CONTROL

Ventilation vapors from the chlorination area are routed to wet

air pollution control equipment before being released to the atmosphere. At the one plant that reports a separate waste stream for area vent scrubbers, the wastewater generated is discharged to a sewer after pH adjustment and sedimentation. That plant does not recycle this wastewater.

$TiCl_4$ HANDLING WET AIR POLLUTION CONTROL

Of the four plants that use titanium tetrachloride as a raw material in titanium production, one reports wet air pollution control for the handling operations. Although not clearly specified in the dcp, there is reason to believe that this plant recycles the scrubber water. The existing treatment for this waste stream consists of pH adjustment and sedimentation before direct discharge.

REDUCTION AREA WET AIR POLLUTION CONTROL

The reduction of $TiCl_4$ to titanium metal is accomplished by a batch process using either sodium or magnesium as the reducing agent. No air pollution control was reported for reduction by sodium, but in the four plants which practice magnesium reduction in an inert atmosphere, a waste stream is generated by the water scrubbers used to treat vent tap vapors. None of those four plants report recycle or reuse of this scrubber water which contains treatable concentrations of metals and chloride. One plant discharges this stream without treatment. The existing treatment at the other three plants consists of pH adjustment or lime addition followed by sedimentation.

MELT CELL WET AIR POLLUTION CONTROL

During the reduction of $TiCl_4$ by magnesium, molten magnesium chloride is tapped off as formed and transferred to electrolytic cells for magnesium recovery. In one plant, during periods of rapid $MgCl_2$ formation, excess $MgCl_2$ is stored in a melt cell before continuing on to the electrolytic cell. Vapors from the melt cell are collected and converted to hydrochloric acid in a water scrubber. That plant does not recycle the scrubber water before discharging it. The existing treatment for this wastewater consists of lime precipitation and sedimentation.

CHLORINE LIQUEFACTION WET AIR POLLUTION CONTROL

The electrolytic reduction of $MgCl_2$ generates chlorine gas which may be returned to the chlorination or reduction processes or liquefied and sold. In one plant, wet air pollution control is provided for the chlorine-saturated air which escapes from the liquefaction process. The wastewater generated is discharged after lime precipitation and sedimentation. That plant does not recycle this wastewater.

SODIUM REDUCTION CONTAINER RECONDITIONING WASH WATER

When the reduction of $TiCl_4$ to titanium metal is complete, the titanium cake is chipped out of the reaction vessel and further processed by crushing and leaching. The reaction container can then be cleaned and returned to the reduction process for reuse. Only the plant using sodium in its reduction process reports a wastewater flow from the container reconditioning operation. The existing treatment for this stream consists of pH adjustment and sedimentation.

CHIP CRUSHING WET AIR POLLUTION CONTROL

The titanium cake formed by reduction and chipped out of the reduction container is crushed to increase the effectiveness of subsequent purification steps. Two plants report wet air pollution control for the crushing operation. One achieves zero discharge using evaporation ponds. The other practices total reuse of this stream in processes unrelated to titanium manufacturing.

ACID LEACHATE AND RINSE WATER

Purification of the crushed titanium chips can be accomplished either by vacuum distillation or by leaching. Vacuum distillation, practiced by one plant, does not result in the production of a wastewater stream. Acid leaching with HCl or HNO_3 followed by a water rinse produces acidic wastewater streams at the four plants reporting this purification process. Two of those four have zero discharge of this stream: one by total reuse and one by evaporation in ponds. The two remaining plants discharge this stream after treatment by pH adjustment or lime addition followed by sedimentation.

SPONGE CRUSHING AND SCREENING WET AIR POLLUTION CONTROL

One plant reports a wastewater flow from a dust control scrubber associated with the crushing, screening, and storage of leached titanium powder. The existing treatment for this stream consists of pH adjustment and sedimentation. The plant does not recycle this wastewater.

ACID PICKLE AND WASH WATER

Three plants report the use of acid pickling to remove surface oxides from massive titanium scrap before alloying and casting. Two plants reporting this waste stream achieve zero discharge: one by contract removal and one by using evaporation ponds. Information on water use and discharge rates at the third plant is not available.

SCRAP MILLING WET AIR POLLUTION CONTROL

Pure titanium scrap and turnings can be alloyed with titanium

sponge and cast into ingots. One plant mills the scrap and provides wet air pollution control. That plant achieves zero discharge of this stream without recycle by using evaporation ponds.

SCRAP DETERGENT WASH WATER

Scrap material such as titanium turnings must be washed with a detergent solution to remove oil and dirt before being cast into ingots. The resulting oily, caustic waste stream is reported by two plants, one of which achieves zero discharge using evaporation ponds. The other plant discharges this stream after treatment by lime precipitation and sedimentation.

CASTING CRUCIBLE WASH WATER

Two plants report a waste stream from the washing of crucibles used in casting operations. At one plant, this oily wastewater is combined with another stream and treated by oil skimming before being discharged directly. The existing treatment at the other plant consists of lime precipitation and sedimentation.

CASTING CONTACT COOLING WATER

One plant reports the use of contact cooling water from a cooling pond in its casting operations. This waste stream is characterized by treatable concentrations of oil and grease, metals, and solids. The existing treatment for casting contact cooling water consists of lime precipitation and sedimentation.

CONTROL AND TREATMENT OPTIONS

The Agency examined three control and treatment alternatives that are applicable to the primary and secondary titanium subcategory. The options selected for evaluation represent a combination of in-process flow reduction, pretreatment technology applicable to individual waste streams, and end-of-pipe treatment technologies.

OPTION A

The Option A treatment scheme includes preliminary treatment consisting of oil skimming where required, followed by chemical precipitation and sedimentation technology. Specifically, lime or some other alkaline compound is used to precipitate priority metal ions as metal hydroxides. The metal hydroxides and suspended solids settle out and the sludge is collected. Vacuum filtration is used to dewater the sludge.

OPTION B

Option B for the primary and secondary titanium subcategory includes all treatment requirements of Option A (oil skimming where required, chemical precipitation and sedimentation)

plus control technologies to reduce the volume of wastewater discharged. Water recycle and reuse are the principal control mechanisms for flow reduction.

OPTION C

Option C for the primary and secondary titanium subcategory consists of all control and treatment requirements of Option B (oil skimming where required, chemical precipitation, sedimentation, and in-process flow reduction) plus multimedia filtration technology added at the end of the Option B treatment scheme. Multimedia filtration is used to remove suspended solids, including precipitates of toxic metals, beyond the concentration attainable by gravity sedimentation. The filter suggested is of the gravity, mixed media type, although other filters, such as rapid sand filters or pressure filters, would perform satisfactorily.

THIS PAGE INTENTIONALLY LEFT BLANK

SECTION VIII

COSTS, ENERGY, AND NONWATER QUALITY ASPECTS

This section presents a summary of compliance costs for the primary and secondary titanium subcategory and a description of the treatment options and subcategory-specific assumptions used to develop these estimates. Together with the estimated pollutant reduction performance presented in Sections IX, X, XI, and XII of this supplement, these cost estimates provide a basis for evaluating each regulatory option. These cost estimates are also used in determining the probable economic impact of regulation on the subcategory at different pollutant discharge levels. In addition, this section addresses nonwater quality environmental impacts of wastewater treatment and control alternatives, including air pollution, solid wastes, and energy requirements, which are specific to the primary and secondary titanium subcategory.

TREATMENT OPTIONS FOR EXISTING SOURCES

As discussed in Section VII, three treatment options have been developed for existing primary and secondary titanium sources. The treatment schemes for each option are summarized below and schematically presented in Figures X-1 through X-3 (pages 4996 - 4998).

OPTION A

Option A consists of preliminary oil -- water separation treatment where necessary and chemical precipitation and sedimentation end-of-pipe technology.

OPTION B

Option B consists of in-process flow reduction measures, oil -- water separation preliminary treatment where required, and chemical precipitation and sedimentation end-of-pipe technology. The in-process flow reduction measure consists of the recycle of the following wet air pollution control wastewater streams through holding tanks:

1. Reduction area wet air pollution control,
2. Melt cell wet air pollution,
3. Chlorine liquefaction wet air pollution control,
4. Chip crushing wet air pollution control,
5. Sponge crushing and screening wet air pollution control, and
6. Scrap milling wet air pollution control.

OPTION C

Option C requires the in-process flow reduction measures of

Option B, oil skimming preliminary treatment where required, and end-of-pipe treatment technology consisting of chemical precipitation, sedimentation, and multimedia filtration.

COST METHODOLOGY

A detailed discussion of the methodology used to develop the compliance costs is presented in Section VIII of Vol. I. Plant-by-plant compliance costs have been estimated for the nonferrous metals manufacturing category and are presented in the administrative record supporting this regulation. Compliance cost estimates developed for the promulgated regulation are presented in Tables VIII-1 and VIII-2 (page 4953) for the direct and indirect dischargers, respectively. These cost estimates are equivalent to those developed for the proposed regulation.

Each subcategory contains a unique set of waste streams requiring certain subcategory-specific assumptions to develop compliance costs. The assumptions specific to the primary and secondary titanium subcategory are discussed briefly below.

(1) It is assumed that all titanium plants use water for floor washing. A 500 gallon holding tank for recycle of treated water is included in the treatment scheme for plants with continuous operation of chemical precipitation. If batch treatment is used (batch chemical precipitation), a tank is assumed to be unnecessary. For both continuous and batch operation, recycle piping and a recycle pump are provided.

(2) All floor wash water is recycled after chemical precipitation and sedimentation.

(3) Costs for removal of the pollutant titanium are included in the compliance costs. For the purpose of costing, treatability concentrations for titanium are assumed to be 0.20 mg/l and 0.13 mg/l for the lime and settle, and lime, settle, and filter treatment scheme, respectively.

(4) All chromium in the raw wastewater is assumed to be Cr^{+3}; therefore, chromium reduction treatment is unnecessary.

Because of the nature of the wastewaters produced in the primary and secondary titanium subcategory, the Agency considered different technology standards for the various configurations of plants in the subcategory. The discharging plants in the subcategory were therefore divided into two groups dependent upon the processes present at a particular plant. A plant that does not practice electrolytic recovery of magnesium and which uses vacuum distillation instead of leaching to purify titanium sponge as the final product has relatively low levels of pollutants, and therefore it is exempted from national regulation. All other plants are covered by the promulgated regulations. If a plant exempted from national regulations elects to either employ electrolytic recovery of magnesium or leaching it immediately becomes subject to the promulgated regulations.

ENERGY REQUIREMENTS

Energy requirements for Option A are estimated at 1,020,000 kwh/yr. Option B energy requirements decrease over those for Option A because less water is being treated, thus saving energy costs for lime and settle treatment. Option A represents roughly one percent of a typical plant's electrical usage. It is therefore concluded that the energy requirements of the treatment options considered will have no significant impact on total plant energy consumption. Option C, which includes filtration, is estimated to increase energy consumption over Option B by approximately one percent.

SOLID WASTE

Sludge generated in the primary and secondary titanium subcategory is due to the precipitation of metal hydroxides and carbonates using lime. Sludges associated with the primary and secondary titanium subcategory will necessarily contain quantities of toxic metal pollutants. Sludges from primary operations are not subject to regulation as hazardous wastes since wastes generated by primary smelters and refiners are currently exempt from regulation by Act of Congress (Resource Conservation and Recovery Act (RCRA), Section 3001(b)), as interpreted by EPA. Wastes from secondary metal operations can be regulated as hazardous. However, the Agency examined the solid wastes that would be generated at secondary nonferrous metals manufacturing plants by the suggested treatment technologies and believes they are not hazardous wastes under the Agency's regulations implementing Section 3001 of RCRA. This judgment is based on the results of Extraction Procedure (EP) toxicity tests performed on similar sludges (i.e. toxic-metal-bearing lime sludges) generated by other industries such as the iron and steel industry. A small amount of excess lime was added during treatment, and the sludges subsequently generated passed the toxicity test. See CFR 40 §61.24. Thus, the Agency believes that the wastewater sludges from both primary and secondary operations will not be EP toxic if the recommended technology is applied.

Although it is the Agency's view that solid wastes generated as a result of these guidelines are not expected to be hazardous, generators of these wastes must test the waste to determine if the wastes meet any of the characteristics of hazardous waste (see 40 CFR 262.11).

If these wastes should be identified or are listed as hazardous, they will come within the scope of RCRA's "cradle to grave" hazardous waste management program, requiring regulation from the point of generation to point of final disposition. EPA's generator standards would require generators of hazardous nonferrous metals manufacturing wastes to meet containerization, labeling, recordkeeping, and reporting requirements; if plants dispose of hazardous wastes off site, they would have to prepare

a manifest which would track the movement of the wastes from the generator's premises to a permitted off-site treatment, storage, or disposal facility. See 40 CFR 262.20 45 FR 33142 (May 19, 1980), as amended at 45 FR 86973 (December 31, 1980). The transporter regulations require transporters of hazardous wastes to comply with the manifest system to assure that the wastes are delivered to a permitted facility. See 40 CFR 263.20 45 FR 33151 (May 19, 1980), as amended at 45 FR 86973 (December 31, 1980). Finally, RCRA regulations establish standards for hazardous waste treatment, storage, and disposal facilities allowed to receive such wastes. See 40 CFR Part 464 46 FR 2802 (January 12, 1981), 47 FR 32274 (July 26, 1982).

Even if these wastes are not identified as hazardous, they still must be disposed of in compliance with the Subtitle D open dumping standards, implementing 4004 of RCRA. See 44 FR 53438 (September 13, 1979). The Agency has calculated as part of the costs for wastewater treatment the cost of hauling and disposing of these wastes. For more details, see Section VIII of the General Development Document.

It is estimated that approximately 487 metric tons per year of sludge will be generated as a result of the promulgated regulations for the primary and secondary titanium subcategory.

AIR POLLUTION

There is no reason to believe that any substantial air pollution problems will result from implementation of oil skimming, chemical precipitation, sedimentation, and multimedia filtration. These technologies transfer pollutants to solid waste and are not likely to transfer pollutants to air.

TABLE VIII-1

COST OF COMPLIANCE FOR THE PRIMARY AND SECONDARY
TITANIUM SUBCATEGORY
DIRECT DISCHARGERS

(March, 1982- Dollars)

Option	Total Required Capital Cost	Total Annual Cost
A	989,000	588,000
B	945.000	543,000
C	1,030'000	585.000

TABLE VIII-2

COST OF COMPLIANCE FOR THE PRIMARY AND SECONDARY
TITANIUM SUBCATEGORY
INDIRECT DISCHARGERS

Compliance costs are not presented here for this subcategory because the data on which they are based have been claimed to be confidential.

THIS PAGE INTENTIONALLY LEFT BLANK

SECTION IX

BEST PRACTICABLE CONTROL TECHNOLOGY CURRENTLY AVAILABLE

This section defines the effluent characteristics attainable through the application of best practicable control technology currently available (BPT). BPT reflects the existing performance by plants of various sizes, ages, and manufacturing processes within the primary and secondary titanium subcategory, as well as the established performance of the recommended BPT systems. Particular consideration is given to the treatment already in place at plants within the data base.

The factors considered in identifying BPT include the total cost of applying the technology in relation to the effluent reduction benefits from such application, the age of equipment and facilities involved, the manufacturing processes used, nonwater quality environmental impacts (including energy requirements), and other factors the Administrator considers appropriate. In general, the BPT level represents the average of the existing performances of plants of various ages, sizes, processes, or other common characteristics. Where existing performance is uniformly inadequate, BPT may be transferred from a different subcategory or category. Limitations based on transfer of technology are supported by a rationale concluding that the technology is, indeed, transferable, and a reasonable prediction that it will be capable of achieving the prescribed effluent limits. BPT focuses on end-of-pipe treatment rather than process changes or internal controls, except where such practices are common industry practice.

TECHNICAL APPROACH TO BPT

The Agency studied the nonferrous metals category to identify the processes used, the wastewaters generated, and the treatment processes installed. Information was collected from industry using data collection portfolios, and specific plants were sampled and the wastewaters analyzed. In making technical assessments of data, reviewing manufacturing processes, and assessing wastewater treatment technology options, both indirect and direct dischargers have been considered as a single group. An examination of plants and processes did not indicate any process differences based on the type of discharge, whether it be direct or indirect.

As explained in Section IV, the primary and secondary titanium subcategory has been subdivided into 15 potential wastewater sources. Since the water use, discharge rates, and pollutant characteristics of each of these wastewaters is potentially unique, effluent limitations will be developed for each of the 15 subdivisions.

For each of the subdivisions, a specific approach was followed

for the development of BPT mass limitations. The first requirement to calculate these limitations is to account for production and flow variability from plant to plant. Therefore, a unit of production or production normalizing parameter (PNP) was determined for each waste stream which could then be related to the flow from the process to determine a production normalized flow. Selection of the PNP for each process element is discussed in Section IV. Each plant within the subcategory was then analyzed to determine (1) which subdivisions were present, (2) the specific flow rates generated for each subdivision, and (3) the specific production normalized flows for each subdivision. This analysis is discussed in detail in Section V. Nonprocess wastewater such as rainfall runoff and noncontact cooling water is not considered in the analysis.

Production normalized flows for each subdivision were then analyzed to determine the flow to be used as part of the basis for BPT mass limitations. The selected flow (sometimes referred to as the BPT regulatory flow or BPT discharge rate) reflects the water use controls which are common practices within the category. The BPT regulatory flow is based on the average of all applicable data. Plants with normalized flows above the average may have to implement some method of flow reduction to achieve the BPT limitations.

The second requirement to calculate mass limitations is the set of concentrations that are achievable by application of the BPT level of treatment technology. Section VII discusses the various control and treatment technologies which are currently in place for each wastewater source. In most cases, the current control and treatment technologies consist of chemical precipitation and sedimentation (lime and settle technology) and a combination of reuse and recycle to reduce flow.

Using these regulatory flows and the achievable concentrations, the next step is to calculate mass loadings for each wastewater source or subdivision. This calculation was made on a stream-by-stream basis, primarily because plants in this subcategory may perform one or more of the operations in various combinations. The mass loadings (milligrams of pollutant per metric ton of production or mg/kkg) were calculated by multiplying the BPT regulatory flow (l/kkg) by the concentration achievable by the BPT level of treatment technology (mg/l) for each pollutant parameter to be limited under BPT. These mass loadings are published in the Federal Register and in 40 CFR Part 421 as the effluent limitations and standards.

The mass loadings which are allowed under BPT for each plant will be the sum of the individual mass loadings for the various wastewater sources which are found at particular plants. Accordingly, all the wastewater generated within a plant may be combined for treatment in a single or common treatment system, but the effluent limitations for these combined wastewaters are based on the various wastewater sources which actually contribute to the combined flow. This method accounts for the variety of

combinations of wastewater sources and production processes which may be found at primary and secondary titanium plants.

The Agency usually establishes wastewater limitations in terms of mass rather than concentration. This approach prevents the use of dilution as a treatment method (except for controlling pH). The production normalized wastewater flow (l/kkg) is a link between the production operations and the effluent limitations. The pollutant discharge attributable to each operation can be calculated from the normalized flow and effluent concentration achievable by the treatment technology and summed to derive an appropriate limitation for each plant.

INDUSTRY COST AND POLLUTANT REMOVAL ESTIMATES

In balancing costs in relation to pollutant removal estimates, EPA considers the volume and nature of existing discharges, the volume and nature of discharges expected after application of BPT, the general environmental effects of the pollutants, and the cost and economic impacts of the required pollution control level. The Act does not require or permit consideration of water quality problems attributable to particular point sources or industries, or water quality improvements in particular water quality bodies. Accordingly, water quality considerations were not the basis for selecting the proposed or promulgated BPT.

The methodology for calculating pollutant removal estimates and plant compliance costs is discussed in Section X. Table X-2 (page 4984)shows the pollutant removal estimates for each treatment option. Compliance costs for direct dischargers are presented in Table X-3 (page 4985).

BPT OPTION SELECTION

The technology basis for the proposed and promulgated BPT limitations is Option A, chemical precipitation and sedimentation technology to remove metals and solids from combined wastewaters and to control pH, and oil skimming preliminary treatment for streams with treatable concentrations of oil and grease. These technologies are already in-place at two of the four direct dischargers in the subcategory. EPA is promulgating these limitations for all titanium plants, except those plants which do not practice electrolytic recovery of magnesium and which use vacuum distillation instead of leaching to purify titanium sponge. For these excepted plants, no BPT limitations are promulgated. The pollutants specifically selected for regulation at BPT are chromium, lead, nickel, titanium, oil and grease, TSS, and pH. The BPT treatment scheme is presented in Figure IX-1 (page 4974).

Implementation of the promulgated BPT limitations will remove annually an estimated 113 kg of toxic metals, 5,791 kg of titanium, and 58,864 kg of TSS. While two plants have the equipment in-place to comply with BPT, we do not believe that the plants are currently achieving the promulgated

BPT limitations. We project a capital cost of $989,000 and an annualized cost of $588,000 for achieving promulgated BPT in all plants.

More stringent technology options were not selected for BPT since they require in-process changes or end-of-pipe technologies less widely practiced in the subcategory, and, therefore, are more appropriately considered under BAT.

WASTEWATER DISCHARGE RATES

A BPT discharge rate is calculated for each subdivision based on the average of the flows of the existing plants, as determined from analysis of dcp. The discharge rate is used with the achievable treatment concentrations to determine BPT effluent limitations. Since the discharge rate may be different for each wastewater source, separate production normalized discharge rates for each of the 15 wastewater sources are discussed below and summarized in Table IX-1 (page 4964). The discharge rates are normalized on a production basis by relating the amount of wastewater generated to the mass of metal produced by the process associated with the waste stream in question. These production normalizing parameters, or PNPs, are also listed in Table IX-1.

Section V of this document further describes the discharge flow rates and presents the water use and discharge flow rates for each plant by subdivision in Tables V-1 through V-16.

CHLORINATION OFF-GAS WET AIR POLLUTION CONTROL

The BPT wastewater discharge allowance at proposal and promulgation for chlorination off-gas wet air pollution control is 936 l/kkg (224 gal/ton) of $TiCl_4$ produced. This rate is allocated only for those plants which convert TiO_2 to $TiCl_4$ by direct chlorination and employ wet scrubbers to control chlorine gas and particulates in the $TiCl_4$ product gases prior to condensation and purification. Two plants report this waste stream, but data for water use rates is supplied by only one facility. The BPT allowance is based on this water use rate. The second plant achieves zero discharge of this stream by reuse in other processes.

CHLORINATION AREA-VENT WET AIR POLLUTION CONTROL

The BPT wastewater discharge allowance at proposal and promulgation for chlorination area-vent wet air pollution control is 1,040 l/kkg (249 gal/ton) of $TiCl_4$ produced. This rate is allocated only for those plants which route the cleaned gas from the chlorination off-gas scrubbers to a chlorination area scrubbing system where it is combined with ventilation vapors from the $TiCl_4$ purification operations. This allowance is based on the water use rate at the only plant that reports this stream. That plant does not recycle this wastewater.

$TiCl_4$ HANDLING WET AIR POLLUTION CONTROL

The BPT wastewater discharge allowance at proposal and promulgation for $TiCl_4$ handling wet air pollution control is 187 l/kkg (45 gal/ton) of $TiCl_4$ handled. This rate is allocated only for those plants which use $TiCl_4$ as a raw material and employ wet scrubbers to control particulate emissions from raw material handling. This allowance is based on the discharge rate at the only plant that reports this stream. Although not clearly specified in the dcp, there is reason to believe that this plant practices greater than 90 percent recycle of this wastewater.

REDUCTION AREA WET AIR POLLUTION CONTROL

The BPT wastewater discharge allowance at proposal and promulgation for reduction area wet air pollution control is 41,303 l/kkg (9,898 gal/ton) of titanium produced. This rate is allocated only for those plants which practice magnesium reduction in an inert atmosphere and employ wet scrubbers to cleanse vapors from the reduction vessel. Four plants report this waste stream. At one plant the reduction area wet air pollution control also is used in the production of metals other than titanium. Information from this plant was not considered when choosing the BPT allowance because it was not possible to determine the amount of flow attributable to titanium production alone. The BPT discharge allowance is based on the average of the water use rates at the remaining three plants which discharge this stream. None of those plants report recycle of this wastewater.

MELT CELL WET AIR POLLUTION CONTROL

The BPT wastewater discharge allowance at proposal and promulgation for melt cell wet air pollution control is 21, 254 l/kkg (5,093 gal/ton) of titanium produced. This rate is allocated only for those plants which store excess $MgCl_2$ slag from magnesium reduction in a melt cell prior to recovering the magnesium by electrolysis, and pass the vapors collected in the melt cell through wet scrubbers before venting them to the atmosphere. This allowance is based on the water use rate at the only plant that reports this stream. That plant does not recycle this wastewater.

CHLORINE LIQUEFACTION WET AIR POLLUTION CONTROL

The BPT wastewater discharge allowance at proposal and promulgation for chlorine liquefaction wet air pollution control is 297,559 l/kkg (71,306 gal/ton) of titanium produced. This rate is allocated only for those plants which liquefy chlorine gas derived from electrolysis of $MgCl_2$ slag, and water-scrub any chlorine vapors that escape from the liquefaction operation. This allowance is based on the water use rate at one plant which practices

chlorine liquefaction. That plant does not recycle this wastewater.

SODIUM REDUCTION CONTAINER RECONDITIONING WASH WATER

The BPT wastewater discharge allowance at proposal and promulgation for sodium reduction container reconditioning wash water is 1,282 l/kkg (307 gal/ton) of titanium produced. This rate is allocated only for those plants which reduce $TiCl_4$ to titanium with sodium, and clean the used retort vessel prior to reusing it in the sodium reduction process. This allowance is based on the water use rate reported by the only plant which practices sodium reduction of $TiCl_4$. That plant does not recycle this wastewater.

CHIP CRUSHING WET AIR POLLUTION CONTROL

The BPT wastewater discharge allowance at proposal and promulgation for chip crushing wet air pollution control is 22,922 l/kkg (5,493 gal/ton) of titanium produced. This rate is allocated only for those plants which use wet scrubbers to control particulate emissions from the crushing of titanium cake formed by reduction. Two plants report this stream. One plant practices total reuse of this stream in processes unrelated to titanium manufacturing. The other plant achieves zero discharge of this stream using evaporation ponds. Information on water use and recycle at the second plant is not available. The BPT flow rate is based on the production normalized water use at the one facility which reported a value.

ACID LEACHATE AND RINSE WATER

The BPT wastewater discharge allowance at proposal and promulgation for acid leachate and rinse water is 11,840 l/kkg (2,837 gal/ton) of titanium produced. This rate is allocated only for those plants which acid leach and rinse with water the crushed titanium cake formed by reduction in order to remove Mg and $MgCl_2$ impurities. Four plants report this waste stream. Two plants practice zero discharge of this stream: one by total reuse and one by evaporation in ponds. Of the two remaining plants, one discharges this stream directly and one discharges it to a POTW. The BPT allowance is based on the discharge rate at the only plant that discharges this stream directly. The reported flow for plant 1075 was disregarded because it included only the acid leaching portion of the waste stream. The other two flows were not incorporated into the BPT wastewater discharge allowance because the Agency does not believe that they represent the optimum water use practices possible in this industry. No recycle of the acid leachate and rinse water is reported at any of the plants.

SPONGE CRUSHING AND SCREENING WET AIR POLLUTION CONTROL

The BPT wastewater discharge allowance at proposal and

promulgation for sponge crushing and screening wet air pollution control is 6,470 l/kkg (1,550 gal/ton) of titanium produced. This rate is allocated for those plants which operate a wet dust control scrubber associated with the crushing, screening, and storage of acid601reached titanium powder. This allowance is based on the water use rate at the only plant that reports this stream. That plant does not recycle this wastewater.

ACID PICKLE AND WASH WATER

The BPT wastewater discharge allowance at proposal and promulgation for acid pickle and wash water is 61 l/kkg (15 gal/ton) of titanium that is acid cleaned. This rate is allocated for those plants which acid pickle and wash with water titanium scrap used in alloying and casting operations. Two plants reporting this waste stream achieve zero discharge: one by contract removal and one by using evaporation ponds. Information on water use and discharge rates at the third plant is not available. The BPT flow rate is based on the average of the production normalized flow rates reported by the two facilities which supplied information on this stream. Since there is no reason to believe that plant 1017 practices recycle of acid pickle and wash water, it is reasonable to base the flow allowance on the average of the discharge rates at the two plants.

SCRAP MILLING WET AIR POLLUTION CONTROL

The BPT wastewater discharge allowance at proposal and promulgation for scrap milling wet air pollution control is 2,261 l/kkg (542 gal/ton) of titanium scrap milled. This rate is allocated only for those plants which provide wet air pollution control when milling titanium scrap and turnings that can be alloyed and cast with titanium sponge. The only plant which reports this waste stream currently achieves zero discharge using evaporation ponds. That plant does not recycle this wastewater. The BPT flow rate is based on the production normalized water use at the one facility reporting this stream.

SCRAP DETERGENT WASH WATER

The BPT wastewater discharge allowance at proposal and promulgation for scrap detergent wash water is 18,064 l/kkg (4,329 gal/ton) of scrap washed. This rate is allocated only for those plants which wash scrap titanium material to remove oil and dirt prior to alloying and casting. Two plants report this waste stream, one of which achieves zero discharge using evaporation ponds. The rate reported by the zero discharge plant was not considered in determining the BPT wastewater discharge allowance because the Agency believes that since this plant has the capability to use evaporation ponds, it does not necessarily employ the optimum water use practices available to the industry. The BPT allowance is based on the discharge rate at the only plant that discharges this stream directly. Neither of the plants which use scrap detergent washes practice

recycle of this stream.

CASTING CRUCIBLE WASH WATER

The BPT wastewater discharge allowance at proposal and promulgation for casting crucible wash water is 477 l/kkg (114 gal/ton) of titanium cast. This rate is allocated only for those plants which wash crucibles used in casting operations. Crucible washes are reported at two plants. The BPT allowance is based on the discharge rate at the only plant which provided flow and production information. No recycle of this stream is practiced at that plant.

CASTING CONTACT COOLING WATER

The BPT wastewater discharge allowance at proposal and promulgation for casting contact cooling water is 729,730 l/kkg (174,871 gal/ton) of titanium cast. This rate is allocated only for those plants which use direct contact cooling water in casting operations. This allowance is based on the discharge rate at the only plant that reports this stream. Information on water recycle at that plant is not available.

REGULATED POLLUTANT PARAMETERS

The raw wastewater concentrations from individual operations and the subcategory as a whole were examined to select certain pollutant parameters for limitation. This examination and evaluation was presented in Section VI. A total of seven pollutants or pollutant parameters are selected for limitation under BPT and are listed below:

119. chromium (total)
122. lead
124. nickel
titanium
oil and grease
TSS
pH

EFFLUENT LIMITATIONS

The achievable concentrations from the application of the BPT model technology are discussed in Section VII of Vol. I and summarized there in Table VII-21 (page 248). These concentrations (both one day maximum and monthly average values) are multiplied by the BPT normalized discharge flows summarized in Table IX-1 (page 4964) to calculate the mass of pollutants allowed to be discharged per mass of product. The results of these calculations in milligrams of pollutant per kilogram of product represent the BPT effluent limitations and are presented in Table IX-2 (page 4966) for each individual waste stream.

Table IX-1

BPT WASTEWATER DISCHARGE RATES FOR THE PRIMARY AND SECONDARY TITANIUM SUBCATEGORY

Wastewater Stream	BPT Normalized Discharge Rate l/kkg	BPT Normalized Discharge Rate gal/ton	Production Normalizing Parameter (kkg)
Chlorination off-gas wet air pollution control	936	224	$TiCl_4$ produced
Chlorination area-vent wet air pollution control	1,040	249	$TiCl_4$ produced
$TiCl_4$ handling wet air pollution control	187	45	$TiCl_4$ handled
Reduction area wet air pollution control	41,303	9,898	Titanium produced
Melt cell wet air pollution control	21,254	5,093	Titanium produced
Chlorine liquefaction wet air pollution control	297,559	71,306	Titanium produced
Sodium reduction container reconditioning wash water	1,282	307	Titanium produced
Chip crushing wet air pollution control	22,922	5,493	Titanium produced
Acid leachate and rinse water	11,840	2,837	Titanium produced

Table IX-1 (Continued)

BPT WASTEWATER DISCHARGE RATES FOR THE PRIMARY AND SECONDARY TITANIUM SUBCATEGORY

Wastewater Stream	BPT Normalized Discharge Rate l/kkg	BPT Normalized Discharge Rate gal/ton	Production Normalizing Parameter (kkg)
Sponge crushing and screening wet air pollution control	6,470	1,553	Titanium produced
Acid pickle and wash water	61	15	Titanium pickled
Scrap milling wet air pollution control	2,261	543	Scrap milled
Scrap detergent wash water	18,064	4,335	Scrap washed
Casting crucible wash water	477	114	Titanium cast
Casting contact cooling water	729,730	175,136	Titanium cast

TABLE IX-2

BPT MASS LIMITATIONS FOR THE
PRIMARY AND SECONDARY TITANIUM SUBCATEGORY

(a) Chlorination Off-Gas Wet Air Pollution Control BPT

Pollutant or Pollutant Property	Maximum for Any One Day	Maximum for Monthly Average
	mg/kg (lb/million lbs) of $TiCl_4$ produced	
Antimony	2.686	1.198
Cadmium	0.318	0.140
*Chromium	0.412	0.168
Copper	1.778	0.936
*Lead	0.393	0.187
*Nickel	1.797	1.189
Thallium	1.919	0.852
Zinc	1.367	0.571
*Titanium	0.880	0.384
*Oil and Grease	18.720	11.230
*TSS	38.380	18.250
*pH	Within the range of 7.5 to 10.0 at all times	

TABLE IX-2 (Continued)

BPT MASS LIMITATIONS FOR THE
PRIMARY AND SECONDARY TITANIUM SUBCATEGORY

(b) Chlorination Area-Vent Wet Air Pollution Control BPT

Pollutant or Pollutant Property	Maximum for Any One Day	Maximum for Monthly Average
	mg/kg (lb/million lbs) of $TiCl_4$ produced	
Antimony	2.985	1.331
Cadmium	0.354	0.156
*Chromium	0.458	0.187
Copper	1.976	1.040
*Lead	0.437	0.208
*Nickel	1.997	1.321
Thallium	2.132	0.946
Zinc	1.518	0.634
*Titanium	0.978	0.426
*Oil and Grease	20.800	12.480
*TSS	42.640	20.280
*pH	Within the range of 7.5 to 10.0 at all times	

*Regulated Pollutant

TABLE IX-2 (Continued)

BPT MASS LIMITATIONS FOR THE
PRIMARY AND SECONDARY TITANIUM SUBCATEGORY

(c) $TiCl_4$ Handling Wet Air Pollution Control BPT

Pollutant or Pollutant Property	Maximum for Any One Day	Maximum for Monthly Average
	mg/kg (lb/million lbs) of $TiCl_4$ handled	
Antimony	0.537	0.239
Cadmium	0.064	0.028
*Chromium	0.082	0.034
Copper	0.355	0.187
*Lead	0.079	0.037
*Nickel	0.359	0.237
Thallium	0.383	0.170
Zinc	0.273	0.114
*Titanium	0.176	0.077
*Oil and Grease	3.740	2.244
*TSS	7.667	3.647
*pH	Within the range of 7.5 to 10.0 at all times	

(d) Reduction Area Wet Air Pollution Control BPT

Pollutant or Pollutant Property	Maximum for Any One Day	Maximum for Monthly Average
	mg/kg (lb/million lbs) of titanium produced	
Antimony	118.500	52.870
Cadmium	14.040	6.195
*Chromium	18.170	7.435
Copper	78.480	41.300
*Lead	17.350	8.261
*Nickel	79.300	52.450
Thallium	84.670	37.590
Zinc	60.300	25.190
*Titanium	38.820	16.930
*Oil and Grease	826.100	495.600
*TSS	1,693.000	805.400
*pH	Within the range of 7.5 to 10.0 at all times	

*Regulated Pollutant

TABLE IX-2 (Continued)

BPT MASS LIMITATIONS FOR THE
PRIMARY AND SECONDARY TITANIUM SUBCATEGORY

(e) Melt Cell Wet Air Pollution Control BPT

Pollutant or Pollutant Property	Maximum for Any One Day	Maximum for Monthly Average
	mg/kg (lb/million lbs) of titanium produced	
Antimony	61.000	27.210
Cadmium	7.226	3.188
*Chromium	9.352	3.826
Copper	40.380	21.250
*Lead	8.927	4.251
*Nickel	40.810	26.990
Thallium	43.570	19.340
Zinc	31.030	12.960
*Titanium	19.980	8.714
*Oil and Grease	425.100	255.000
*TSS	871.400	414.500
*pH	Within the range of 7.5 to 10.0 at all times	

(f) Chlorine Liquefaction Wet Air Pollution Control BPT

Pollutant or Pollutant Property	Maximum for Any One Day	Maximum for Monthly Average
	mg/kg (lb/million lbs) of titanium produced	
Antimony	854.000	380.900
Cadmium	101.200	44.630
*Chromium	130.900	53.560
Copper	565.400	297.600
*Lead	125.000	59.510
*Nickel	571.300	377.900
Thallium	610.000	270.800
Zinc	434.400	181.500
*Titanium	279.700	122.000
*Oil and Grease	5,951.000	3,571.000
*TSS	12,200.000	5,802.000
*pH	Within the range of 7.5 to 10.0 at all times	

*Regulated Pollutant

TABLE IX-2 (Continued)

BPT MASS LIMITATIONS FOR THE
PRIMARY AND SECONDARY TITANIUM SUBCATEGORY

(g) Sodium Reduction Container Reconditioning Wash Water BPT

Pollutant or Pollutant Property	Maximum for Any One Day	Maximum for Monthly Average
	mg/kg (lb/million lbs) of titanium produced	
Antimony	3.679	1.641
Cadmium	0.436	0.192
*Chromium	0.564	0.231
Copper	2.436	1.282
*Lead	0.538	0.256
*Nickel	2.461	1.628
Thallium	2.628	1.167
Zinc	1.872	0.782
*Titanium	1.205	0.526
*Oil and Grease	25.640	15.380
*TSS	52.560	25.000
*pH	Within the range of 7.5 to 10.0 at all times	

(h) Chip Crushing Wet Air Pollution Control BPT

Pollutant or Pollutant Property	Maximum for Any One Day	Maximum for Monthly Average
	mg/kg (lb/million lbs) of titanium produced	
Antimony	65.790	29.340
Cadmium	7.793	3.438
*Chromium	10.090	4.126
Copper	43.550	22.920
*Lead	9.627	4.584
*Nickel	44.010	29.110
Thallium	46.990	20.860
Zinc	33.470	13.980
*Titanium	21.550	9.398
*Oil and Grease	458.400	275.100
*TSS	939.800	447.000
*pH	Within the range of 7.5 to 10.0 at all times	

*Regulated Pollutant

TABLE IX-2 (Continued)

BPT MASS LIMITATIONS FOR THE
PRIMARY AND SECONDARY TITANIUM SUBCATEGORY

(i) Acid Leachate and Rinse Water BPT

Pollutant or Pollutant Property	Maximum for Any One Day	Maximum for Monthly Average
	mg/kg (lb/million lbs) of titanium produced	
Antimony	33.980	15.160
Cadmium	4.026	1.776
*Chromium	5.210	2.131
Copper	22.500	11.840
*Lead	4.973	2.368
*Nickel	22.730	15.040
Thallium	24.270	10.770
Zinc	17.290	7.222
*Titanium	11.130	4.854
*Oil and Grease	236.800	142.100
*TSS	485.400	230.900
*pH	Within the range of 7.5 to 10.0 at all times	

(j) Sponge Crushing and Screening Wet APC BPT

Pollutant or Pollutant Property	Maximum for Any One Day	Maximum for Monthly Average
	mg/kg (lb/million lbs) of titanium produced	
Antimony	18.570	8.282
Cadmium	2.200	0.971
*Chromium	2.847	1.165
Copper	12.290	6.470
*Lead	2.717	1.294
*Nickel	12.420	8.217
Thallium	13.260	5.888
Zinc	9.446	3.947
*Titanium	6.082	2.653
*Oil and Grease	129.400	77.640
*TSS	265.300	126.200
*pH	Within the range of 7.5 to 10.0 at all times	

*Regulated Pollutant

TABLE IX-2 (Continued)

BPT MASS LIMITATIONS FOR THE
PRIMARY AND SECONDARY TITANIUM SUBCATEGORY

(k) Acid Pickle and Wash Water BPT

Pollutant or Pollutant Property	Maximum for Any One Day	Maximum for Monthly Average
mg/kg (lb/million lbs) of titanium pickled		
Antimony	0.175	0.078
Cadmium	0.021	0.009
*Chromium	0.027	0.011
Copper	0.116	0.061
*Lead	0.026	0.012
*Nickel	0.117	0.078
Thallium	0.125	0.056
Zinc	0.089	0.037
*Titanium	0.057	0.025
*Oil and Grease	1.220	0.732
*TSS	2.501	1.190
*pH	Within the range of 7.5 to 10.0 at all times	

(l) Scrap Milling Wet Air Pollution Control BPT

Pollutant or Pollutant Property	Maximum for Any One Day	Maximum for Monthly Average
mg/kg (lb/million lbs) of scrap milled		
Antimony	6.489	2.894
Cadmium	0.769	0.339
*Chromium	0.995	0.407
Copper	4.296	2.261
*Lead	0.950	0.452
*Nickel	4.341	2.871
Thallium	4.635	2.058
Zinc	3.301	1.379
*Titanium	2.125	0.927
*Oil and Grease	45.220	27.130
*TSS	92.700	44.090
*pH	Within the range of 7.5 to 10.0 at all times	

*Regulated Pollutant

TABLE IX-2 (Continued)

BPT MASS LIMITATIONS FOR THE
PRIMARY AND SECONDARY TITANIUM SUBCATEGORY

(m) Scrap Detergent Wash Water BPT

Pollutant or Pollutant Property	Maximum for Any One Day	Maximum for Monthly Average
mg/kg (lb/million lbs) of scrap washed		
Antimony	51.840	23.120
Cadmium	6.142	2.710
*Chromium	7.948	3.252
Copper	34.320	18.060
*Lead	7.587	3.613
*Nickel	34.680	22.940
Thallium	37.030	16.440
Zinc	26.370	11.020
*Titanium	16.980	7.406
*Oil and Grease	361.300	216.800
*TSS	740.600	352.200
*pH	Within the range of 7.5 to 10.0 at all times	

(n) Casting Crucible Wash Water BPT

Pollutant or Pollutant Property	Maximum for Any One Day	Maximum for Monthly Average
mg/kg (lb/million lbs) of titanium cast		
Antimony	1.369	0.611
Cadmium	0.162	0.072
*Chromium	0.210	0.086
Copper	0.906	0.477
*Lead	0.200	0.095
*Nickel	0.916	0.606
Thallium	0.978	0.434
Zinc	0.696	0.291
*Titanium	0.448	0.196
*Oil and Grease	9.540	5.724
*TSS	19.560	9.302
*pH	Within the range of 7.5 to 10.0 at all times	

*Regulated Pollutant

TABLE IX-2 (Continued)

BPT MASS LIMITATIONS FOR THE
PRIMARY AND SECONDARY TITANIUM SUBCATEGORY

(o) Casting Contact Cooling Water BPT

Pollutant or Pollutant Property	Maximum for Any One Day	Maximum for Monthly Average
	mg/kg (lb/million lbs) of titanium cast	
Antimony	2,094.000	934.100
Cadmium	248.100	109.500
*Chromium	321.100	131.400
Copper	1,386.000	729.700
*Lead	306.500	145.900
*Nickel	1,401.000	926.800
Thallium	1,496.000	664.100
Zinc	1,065.000	445.100
*Titanium	685.900	299.200
*Oil and Grease	14,590.000	8,757.000
*TSS	29,920.000	14,230.000
*pH	Within the range of 7.5 to 10.0 at all times	

*Regulated Pollutant

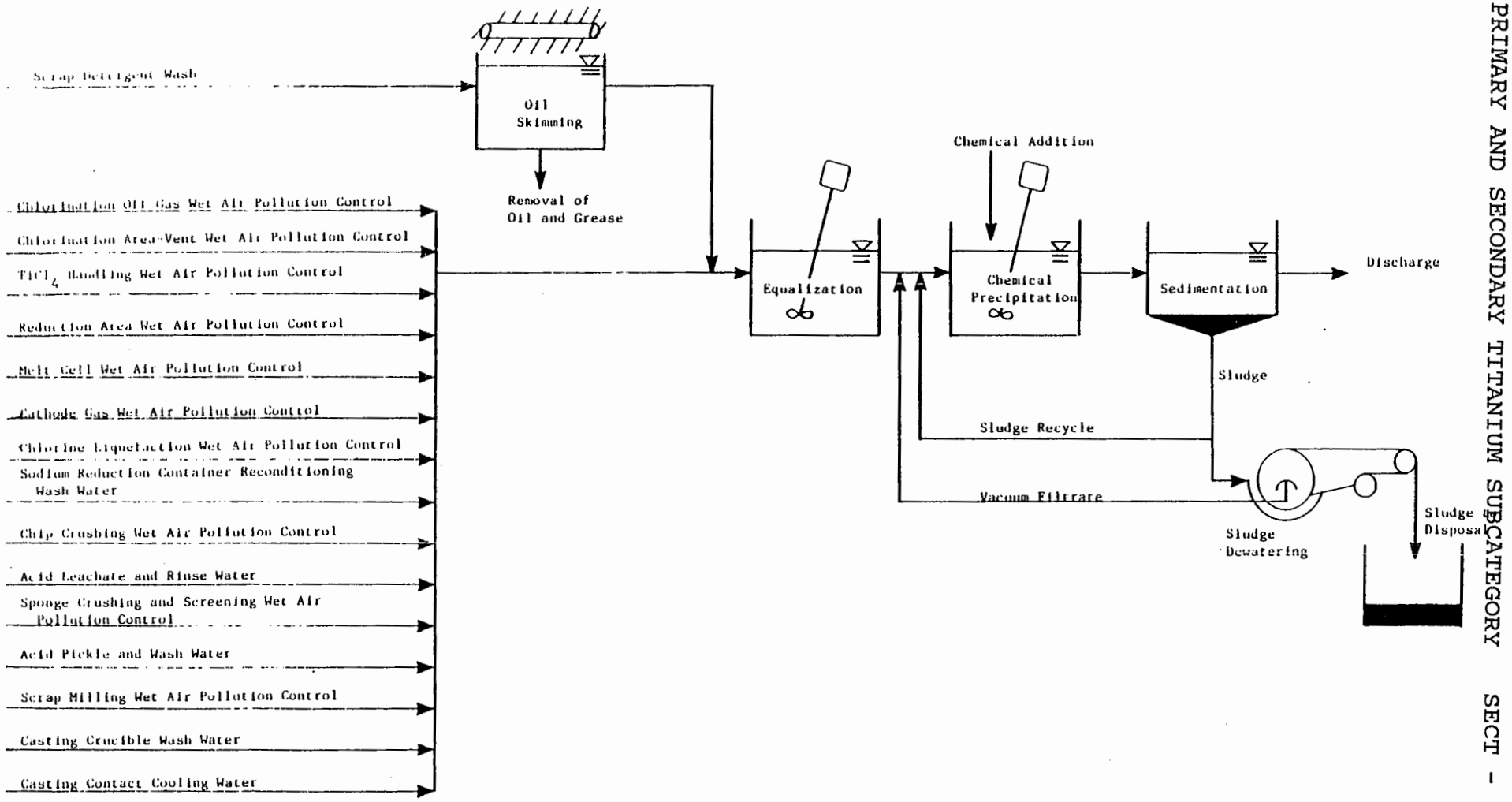

Figure IX-1

BPT TREATMENT SCHEME FOR THE PRIMARY AND SECONDARY TITANIUM SUBCATEGORY

THIS PAGE INTENTIONALLY LEFT BLANK

SECTION X

BEST AVAILABLE TECHNOLOGY ECONOMICALLY ACHIEVABLE

These effluent limitations are based on the best control and treatment technology used by a specific point source within the industrial category or subcategory, or by another category from which it is transferable. Emphasis is placed on additional treatment techniques applied at the end of the treatment systems currently used, as well as reduction of the amount of water used and discharged, process control, and treatment technology optimization.

The factors considered in assessing best available technology economically achievable (BAT) include the age of equipment and facilities involved, the process used, process changes, nonwater quality environmental impacts (including energy requirements), and the costs of application of such technology. BAT represents the best available technology economically achievable at plants of various ages, sizes, processes, or other characteristics. BAT may be transferred from a different subcategory or category and may include feasible process changes or internal controls, even when not in common industry practice.

The statutory assessment of BAT considers costs, but does not require a balancing of costs against pollutant removal benefits However, in assessing the proposed and promulgated BAT, the Agency has given substantial weight to the economic achievability of the technology.

TECHNICAL APPROACH TO BAT

The Agency reviewed a wide range of technology options and evaluated the available possibilities to ensure that the most effective and beneficial technologies were used as the basis of BAT. To accomplish this, the Agency elected to examine three technology options which could be applied to the primary and secondary titanium subcategory as alternatives for the basis of BAT effluent limitations.

For the development of BAT effluent limitations, mass loadings were calculated for each wastewater source or subdivision in the subcategory using the same technical approach as described in Section IX for BPT limitations development. The differences in the mass loadings for BPT and BAT are due to increased treatment effectiveness achievable with the more sophisticated BAT treatment technology and reductions in the effluent flows allocated to various waste streams.

The treatment technologies considered for BAT are summarized

below:

Option A (Figure X-1, page 4996):

o Preliminary treatment consisting of oil skimming (where required)
o Chemical precipitation and sedimentation

Option B (Figure X-2, page 4997):

o Preliminary treatment consisting of oil skimming (where required)
o Chemical precipitation and sedimentation
o Flow reduction

Option C (Figure X-3, page 4998):

o Preliminary treatment consisting of oil skimming (where required)
o Chemical precipitation and sedimentation
o Flow reduction
o Multimedia filtration

The three technology options examined for BAT are discussed in greater detail below. The first option considered (Option A) is the same as the BPT treatment and control technology which was presented in the previous section. The last two options each represent substantial progress toward preventing pollution of the environment above and beyond the progress achievable by BPT.

OPTION A

Option A for the primary and secondary titanium subcategory is equivalent to the control and treatment technologies selected as the basis for BPT in Section IX. The BPT end-of-pipe treatment scheme includes chemical precipitation and sedimentation, with oil skimming preliminary treatment of wastewaters containing treatable concentrations of oil and grease (see Figure X-1). The discharge allowances for Option A are equal to the discharge allowances allocated to each stream at BPT.

OPTION B

Option B for the primary and secondary titanium subcategory achieves lower pollutant discharge by building upon the Option A end-of-pipe treatment technology. Option B consists of chemical precipitation, sedimentation, oil skimming preliminary treatment of wastewaters containing treatable concentrations of oil and grease, and in-process flow reduction (see Figure X-2). Flow reduction measures, including in-process changes, result in the elimination of some wastewater streams and the concentration of pollutants in other effluents. Treatment of a more concentrated effluent allows achievement of a greater net pollutant removal and introduces the possible economic benefits associated with treating a lower volume of wastewater.

Methods used in Option B to reduce process wastewater generation

or discharge rates through flow reduction are discussed below:

Recycle of Water Used in Wet Air pollution Control

There are six wastewater sources associated with wet air pollution control that are regulated under these effluent limitations for which recycle is considered feasible:

- Reduction area wet air pollution control,
- Melt cell wet air pollution control,
- Chlorine liquefaction wet air pollution control,
- Chip crushing wet air pollution control
- Sponge crushing and screening wet air pollution control, and
- Scrap milling wet air pollution control.

Each of these waste streams is reported by one or more plants in the primary and secondary titanium subcategory. Table X-1 (page 4983) presents the number of plants reporting wastewater use with these sources, the number of plants practicing recycle of scrubber liquor, and the range of recycle values being used. Presently there is no reported recycle or reuse of these scrubber liquors in any of the plants; however, reduction of flow through recycle or reuse represents the best available technology economically achievable for these streams.

Recycle or Reuse of Casting Contact Cooling Water

One plant reports this waste stream without providing information on current water reuse and recycle practices. EPA believes that flow reduction can be achieved by recycle with a cooling tower for casting contact cooling water.

OPTION C

Option C for the primary and secondary titanium subcategory consists of all control and treatment requirements of Option B (chemical precipitation, sedimentation, oil skimming where required, and in-process flow reduction) plus multimedia filtration technology added at the end of the Option B treatment scheme (see Figure X-3). Multimedia filtration is used to remove suspended solids, including precipitates of toxic metals, beyond the concentration attainable by gravity sedimentation. The filter suggested is of the gravity, mixed media type, although other filters, such as rapid sand filters or pressure filters, would perform satisfactorily.

INDUSTRY COST AND POLLUTANT REMOVAL ESTIMATES

As one means of evaluating each technology option. EPA developed estimates of the pollutant removals and the compliance costs associated with each option. The methodologies are described below.

POLLUTANT REMOVAL ESTIMATES

Sampling data collected during the field sampling program were used to characterize the major waste streams considered for regulation. At each sampled facility, the data was production normalized for each unit operation (i.e., mass of pollutant generated per mass of product manufactured). This value, referred to as the raw waste, was used to estimate the mass of priority pollutants generated within the primary and secondary titanium subcategory. The pollutant removal estimates were calculated for each plant by first estimating the total mass of each pollutant in the untreated wastewater. This was calculated by first multiplying the raw waste values by the corresponding production value for that stream and then summing these values for each pollutant for every stream generated by the plant.

Next, the volume of wastewater discharged after the application of each treatment option was estimated for each operation at each plant by comparing the actual discharge to the regulatory flow. The smaller of the two values was selected and summed with the other plant flows. The mass of pollutant discharged was then estimated by multiplying the achievable concentration values attainable with the option (mg/l) by the estimated volume of process wastewater discharged by the subcategory. The mass of pollutant removed is the difference between the estimated mass of pollutant generated by each plant in the subcategory and the mass of pollutant discharged after application of the treatment option. The pollutant removal estimates for direct dischargers in the primary and secondary titanium subcategory are presented in Table X-2 (page 4984). These estimates are the same as those developed for the proposed regulation.

COMPLIANCE COSTS

In estimating subcategory-wide compliance costs, the first step was to develop a cost estimation model, relating the total costs associated with installation and operation of wastewater treatment technologies to plant process wastewater discharge. EPA applied the model to each plant. The plant's investment and operating costs are determined by what treatment it has in place and by its individual process wastewater discharge flow. As discussed above, this flow is either the actual or the BAT regulatory flow, whichever is lesser. The final step was to annualize the capital costs, and to sum the annualized capital costs, and the operating and maintenance costs for each plant, yielding the cost of compliance for the subcategory. The compliance costs associated with the various options are presented in Table X-3 (page 4985) for direct dischargers in the primary and secondary titanium subcategory. Compliance costs for indirect dischargers are shown in Section XII. These costs were used in assessing economic achievability.

BAT OPTION SELECTION - PROPOSAL

EPA proposed Level A BAT limitations for titanium plants which do not practice electrolytic recovery of magnesium and which use vacuum distillation instead of leaching to purify titanium sponge as the final product based on chemical precipitation, sedimentation, and oil skimming (BPT technology) plus in-process wastewater flow reduction. Level B BAT limitations were proposed for all other titanium plants based on chemical precipitation, sedimentation, and oil skimming pretreatment where required (BPT technology), plus flow reduction and filtration. Flow reduction is based on 90 percent recycle of scrubber effluent through holding tanks and 90 percent recycle of casting contact cooling water through cooling towers.

It was estimated at proposal that if the four existing direct discharging Level B plants in this subcategory became Level A dischargers they would incur a capital cost of $641,000 and an annualized cost of $325,000 (1982 dollars); 135 kilograms of toxic pollutants would be removed.

Implementation of the proposed Level B BAT limitations would remove annually an estimated 298 kilograms of priority pollutants. Estimated capital cost for achieving proposed BAT was $1,030,000, and annualized cost was $585,000 (1982 dollars).

BAT OPTION SELECTION - PROMULGATION

We are not promulgating BAT limitations for titanium plants which do not practice electrolytic recovery of magnesium and which use vacuum distillation instead of leaching to purify titanium sponge. BAT limitations are promulgated for all other titanium plants based on chemical precipitation, sedimentation, and oil skimming pretreatment where required, (BPT technology) plus flow reduction, and filtration. Flow reduction is based on 90 percent recycle of scrubber effluent through holding tanks and 90 percent recycle of casting contact cooling water through cooling towers. The Agency considered applying the same technology levels to this entire subcategory but decided to promulgate this regulatory scheme because there was little pollutant removal from the wastewater streams at certain types of plants when treated by the BAT technology.

The pollutants specifically selected for limitation under BAT are chromium, lead, nickel, and titanium. The toxic pollutants antimony, cadmium, copper, thallium and zinc were also considered for regulation because they were found at treatable concentrations in the raw wastewaters from this subcategory. These pollutants were not selected for specific regulation because they will be adequately treated when the regulated priority metals are treated to the concentrations achievable by the model BAT technology.

Implementation of the promulgated BAT limitations would remove annually an estimated 298 kg of toxic pollutants. Estimated

capital cost for achieving promulgated BAT is $1,030,000, and annualized cost is $585,000 (1982 dollars).

WASTEWATER DISCHARGE RATES

A BAT discharge rate was calculated for each subdivision based upon the flows of the existing plants, as determined from analysis of the data collection portfolios. The discharge rate is used with the achievable treatment concentrations to determine BAT effluent limitations. Since the discharge rate may be different for each wastewater source, separate production normalized discharge rates for each of the 16 wastewater sources were determined and are summarized in Table X-4 (page 4986). The discharge rates are normalized on a production basis by relating the amount of wastewater generated to the mass of metal product which is produced by the process associated with the waste stream in question. These production normalizing parameters, or PNPs, are also listed in Table X-4.

The BAT discharge rates reflect the flow reduction requirements of the selected BAT option. For this reason, the casting contact cooling water and the scrubber waters which were targeted for flow reduction through recycle for BAT have lower flow rates than the corresponding BPT flows. A discussion of these wastewaters is presented below.

REDUCTION AREA WET AIR POLLUTION CONTROL

The BAT wastewater discharge allowance at both proposal and promulgation for reduction area wet air pollution control is 4,130 l/kkg (990 gal/ton) of titanium produced. This waste stream is reported at four plants, one of which does not provide enough information to determine the amount of flow attributable to titanium production. The BAT allowance is based on 90 percent reuse or recycle of the average amount of water used for reduction area wet air pollution control at the remaining three plants. None of these plants currently recycle this wastewater.

MELT CELL WET AIR POLLUTION CONTROL

The BAT wastewater discharge allowance at both proposal and promulgation for melt cell wet air pollution control is 2,126 l/kkg (509 gal/ton) of titanium produced. This allowance is based on 90 percent reuse or recycle of the water used for melt cell wet air pollution control at the only plant that reports this stream. That plant currently does not recycle this wastewater.

CHLORINE LIQUEFACTION WET AIR POLLUTION CONTROL

The BAT wastewater discharge allowance at both proposal and promulgation for chlorine liquefaction wet air pollution control is 29,756 l/kkg (7,131 gal/ton) of titanium produced. This allowance is based on 90 percent reuse or recycle of the water used for chlorine liquefaction wet air

pollution control at the only plant that reports this scrubber. That plant currently does not recycle this wastewater.

CHIP CRUSHING WET AIR POLLUTION CONTROL

The BAT wastewater discharge allowance at both proposal and promulgation for chip crushing wet air pollution control is 2,292 l/kkg (549 gal/ton) of titanium produced. This allowance is based on 90 percent recycle of the water use at the one facility which reported water use and zero percent recycle. The other facility reporting this stream did not supply information concerning water use and recycle practices.

SPONGE CRUSHING AND SCREENING WET AIR POLLUTION CONTROL

The proposed and promulgated BAT wastewater discharge allowance for sponge crushing and screening wet air pollution control is 647 l/kkg (155 gal/ton) of titanium produced. This allowance is based on 90 percent reuse or recycle of the water used for sponge crushing and screening wet air pollution control at the one plant that reports this stream. That plant currently does not recycle this wastewater.

SCRAP MILLING WET AIR POLLUTION CONTROL

The proposed and promulgated BAT wastewater discharge allowance for scrap milling wet air pollution control is 227 l/kkg (54 gal/ton) of titanium scrap milled. This allowance is based on 90 percent recycle of the production normalized water use at the one facility reporting this waste stream. That facility currently practices no recycle of this stream.

CASTING CONTACT COOLING WATER

The BAT wastewater discharge allowance at both proposal and promulgation for casting contact cooling water is 72,973 l/kkg (17,487 gal/ton) of titanium cast. This allowance is based on 90 percent reuse or recycle with a cooling tower of the water used for casting contact cooling at the only plant that reports this stream. Information on current water reuse and recycle practices at that plant is not available.

REGULATED POLLUTANT PARAMETERS

The Agency placed particular emphasis on the toxic pollutants. The raw wastewater concentrations from individual operations and the subcategory as a whole were examined to select certain pollutants and pollutant parameters for limitation. This examination and evaluation, presented in Section VI, concluded that ten pollutants and pollutant parameters are present in primary and secondary titanium wastewaters at concentrations that can be effectively reduced by identified treatment technologies. However, the high cost associated with analysis for toxic metal pollutants has

prompted EPA to develop an alternative method for regulating and monitoring toxic pollutant discharges from the nonferrous metals manufacturing category. Rather than developing specific effluent mass limitations and standards for each of the toxic metals found in treatable concentrations in the raw wastewaters from a given subcategory, the Agency is promulgating effluent mass limitations only for those pollutants generated in the greatest quantities as shown by the pollutant removal analysis. The pollutants selected for specific limitation are listed below:

119. chromium (total)
122. lead
124. nickel
titanium

By establishing limitations and standards for certain toxic metal pollutants, dischargers will attain the same degree of control over toxic metal pollutants as they would have been required to achieve had all the toxic metal pollutants been directly limited.

This approach is technically justified since the achievable concentrations used for chemical precipitation and sedimentation technology are based on optimized treatment for concomitant multiple metals removal. Thus, even though metals have somewhat different theoretical solubilities, they will be removed at very nearly the same rate in a chemical precipitation and sedimentation treatment system operated for multiple metals removal. Filtration as part of the technology basis is likewise justified because this technology removes metals non-preferentially.

The following priority pollutants are excluded from limitation on the basis that they are effectively controlled by the limitations developed for chromium, lead, and nickel:

114. antimony
118. cadmium
120. copper
127. thallium
128. zinc

EFFLUENT LIMITATIONS

The effluent concentrations achievable by the application of the BAT treatment technology are discussed in Section VII of Vol. I and summarized there in Table VII-21 (page 248). The achievable concentrations (both one-day maximum and monthly average values) are multiplied by the BAT normalized discharge flows summarized in Table X-4 (page 4986) to calculate the mass of pollutants allowed to be discharged per mass of product. The results of these calculations in milligrams of pollutant per kilogram of product represent the BAT effluent limitations and are presented in Table X-5 (page 4988) for each individual waste stream.

Table X-1

CURRENT RECYCLE PRACTICES WITHIN THE
PRIMARY AND SECONDARY TITANIUM SUBCATEGORY

	Number of Plants With Wastewater	Number of Plants Practicing Recycle	Range of Recycle Values (%)
Reduction area wet air pollution control	4	0	0
Melt cell wet air pollution control	1	0	0
Chlorine liquefaction wet air pollution control	1	0	0
Chip crushing wet air pollution control	1	0	0
Sponge crushing and screening wet air pollution control	1	0	0
Scrap milling wet air pollution control	1	0	0

Table X-2

POLLUTANT REMOVAL ESTIMATES FOR DIRECT DISCHARGERS IN THE PRIMARY AND SECONDARY TITANIUM SUBCATEGORY

Pollutant	Raw Waste (kg/yr)	Option A Discharge (kg/yr)	Option A Removed (kg/yr)	Option B Discharge (kg/yr)	Option B Removed (kg/yr)	Option C Discharge (kg/yr)	Option C Removed (kg/yr)
Antimony	6.11	6.03	0.08	5.73	0.38	5.56	0.55
Arsenic	4.91	4.88	0.03	4.57	0.34	4.44	0.47
Cadmium	4.00	3.94	0.06	3.62	0.37	2.62	1.37
Chromium (total)	53.17	48.44	4.73	37.75	15.42	35.54	17.63
Copper	51.81	48.52	3.30	40.32	11.49	34.17	17.64
Cyanide (total)	8.82	8.79	0.03	8.39	0.43	8.13	0.69
Lead	73.30	21.77	51.53	14.02	59.28	11.10	62.20
Mercury	0.19	0.17	0.02	0.11	0.08	0.11	0.08
Nickel	157.41	147.32	10.09	100.97	56.43	53.30	104.11
Selenium	4.70	4.53	0.17	4.18	0.52	4.10	0.60
Silver	3.84	3.83	0.01	3.66	0.18	3.44	0.40
Thallium	47.34	44.69	2.66	26.58	20.77	17.90	29.44
Zinc	97.53	83.04	14.49	45.81	51.71	34.16	63.37
TOTAL PRIORITY POLLUTANTS	513.11	425.93	87.18	295.72	217.39	214.56	298.56
Titanium	7,140.55	1,349.54	5,791.00	944.23	6,196.31	899.23	6,241.32
Fluoride	0.71	0.71	0	0.33	0.38	0.31	0.40
TOTAL NONCONVENTIONALS	7,141.26	1,350.25	5,791.00	944.56	6,196.69	899.54	6,241.72
TSS	75,096.11	10,650.10	64,446.01	5,720.60	69,375.50	4,693.71	70,402.40
Oil and Grease	34,220.19	16,874.23	17,345.95	10,751.68	23,468.51	10,414.11	23,806.08
TOTAL CONVENTIONALS	109,316.29	27,524.33	81,791.96	16,472.28	92,844.01	15,107.82	94,208.48
TOTAL POLLUTANTS	116,970.66	29,300.51	87,670.15	17,712.56	99,258.10	16,221.91	100,748.75

TABLE X-3

COST OF COMPLIANCE FOR THE PRIMARY AND SECONDARY TITANIUM SUBCATEGORY DIRECT DISCHARGERS

(March, 1982 Dollars)

Option	Total Required Capital Cost	Total Annual Cost
A	989,000	588 000
B	945,000	543,000
C	1.030,000	585,000

Table X-4

BAT WASTEWATER DISCHARGE RATES FOR THE PRIMARY AND SECONDARY TITANIUM SUBCATEGORY

Wastewater Stream	BAT Normalized Discharge Rate		Production Normalizing Parameter (kkg)
	l/kkg	gal/ton	
Chlorination off-gas wet air pollution control	936	224	$TiCl_4$ produced
Chlorination area-vent wet air pollution control	1,040	249	$TiCl_4$ produced
$TiCl_4$ handling wet air pollution control	187	45	$TiCl_4$ handled
Reduction area wet air pollution control	4,130	990	Titanium produced
Melt cell wet air pollution control	2,126	509	Titanium produced
Chlorine liquefaction wet air pollution control	29,756	7,131	Titanium produced
Sodium reduction container reconditioning wash water	1,282	307	Titanium produced
Chip crushing wet air pollution control	2,292	549	Titanium produced
Acid leachate and rinse water	11,840	2,837	Titanium produced

Table X-4 (Continued)

BAT WASTEWATER DISCHARGE RATES FOR THE PRIMARY AND SECONDARY TITANIUM SUBCATEGORY

Wastewater Stream	BAT Normalized Discharge Rate l/kkg	BAT Normalized Discharge Rate gal/ton	Production Normalizing Parameter (kkg)
Sponge crushing and screening wet air pollution control	647	155	Titanium produced
Acid pickle and wash water	61	15	Titanium pickled
Scrap milling wet air pollution control	227	55	Scrap milled
Scrap detergent wash water	18,064	4,335	Scrap washed
Casting crucible wash water	477	114	Titanium cast
Casting contact cooling water	72,973	17,514	Titanium cast

TABLE X-5

BAT MASS LIMITATIONS FOR THE
PRIMARY AND SECONDARY TITANIUM SUBCATEGORY

(a) Chlorination Off-Gas Wet Air Pollution Control BAT

Pollutant or Pollutant Property	Maximum for Any One Day	Maximum for Monthly Average
	mg/kg (lb/million lbs) of $TiCl_4$ produced	
Antimony	1.806	0.805
Cadmium	0.187	0.075
*Chromium	0.346	0.140
Copper	1.198	0.571
*Lead	0.262	0.122
*Nickel	0.515	0.346
Thallium	1.310	0.571
Zinc	0.955	0.393
*Titanium	0.496	0.215

(b) Chlorination Area-Vent Wet Air Pollution Control BAT

Pollutant or Pollutant Property	Maximum for Any One Day	Maximum for Monthly Average
mg/kg (lb/million lbs) of $TiCl_4$ produced		
Antimony	2.007	0.894
Cadmium	0.208	0.083
*Chromium	0.385	0.156
Copper	1.331	0.634
*Lead	0.291	0.135
*Nickel	0.572	0.385
Thallium	1.456	0.634
Zinc	1.061	0.437
*Titanium	0.551	0.239

*Regulated Pollutant

TABLE X-5 (Continued)

BAT MASS LIMITATIONS FOR THE
PRIMARY AND SECONDARY TITANIUM SUBCATEGORY

(c) $TiCl_4$ Handling Wet Air Pollution Control BAT

Pollutant or Pollutant Property	Maximum for Any One Day	Maximum for Monthly Average
	mg/kg (lb/million lbs) of TiCl4 handled	
Antimony	0.361	0.161
Cadmium	0.037	0.015
*Chromium	0.069	0.028
Copper	0.239	0.114
*Lead	0.052	0.024
*Nickel	0.103	0.069
Thallium	0.262	0.114
Zinc	0.191	0.079
*Titanium	0.099	0.043

(d) Reduction Area Wet Air Pollution Control BAT

Pollutant or Pollutant Property	Maximum for Any One Day	Maximum for Monthly Average
	mg/kg (lb/million lbs) of titanium produced	
Antimony	7.971	3.552
Cadmium	0.826	0.330
*Chromium	1.528	0.620
Copper	5.286	2.519
*Lead	1.156	0.537
*Nickel	2.272	1.528
Thallium	5.782	2.519
Zinc	4.213	1.735
*Titanium	2.189	0.950

*Regulated Pollutant

TABLE X-5 (Continued)

BAT MASS LIMITATIONS FOR THE
PRIMARY AND SECONDARY TITANIUM SUBCATEGORY

(e) Melt Cell Wet Air Pollution Control BAT

Pollutant or Pollutant Property	Maximum for Any One Day	Maximum for Monthly Average
	mg/kg (lb/million lbs) of titanium produced	
Antimony	4.103	1.828
Cadmium	0.425	0.170
*Chromium	0.787	0.319
Copper	2.721	1.297
*Lead	0.595	0.276
*Nickel	1.169	0.787
Thallium	2.976	1.297
Zinc	2.169	0.893
*Titanium	1.127	0.489

(f) Chlorine Liquefaction Wet Air Pollution Control BAT

Pollutant or Pollutant Property	Maximum for Any One Day	Maximum for Monthly Average
	mg/kg (lb/million lbs) of titanium produced	
Antimony	57.430	25.590
Cadmium	5.951	2.380
*Chromium	11.010	4.463
Copper	38.090	18.150
*Lead	8.332	3.868
*Nickel	16.370	11.010
Thallium	41.660	18.150
Zinc	30.350	12.500
*Titanium	15.770	6.844

*Regulated Pollutant

TABLE X-5 (Continued)

BAT MASS LIMITATIONS FOR THE
PRIMARY AND SECONDARY TITANIUM SUBCATEGORY

(g) Sodium Reduction Container Reconditioning Wash Water BAT

Pollutant or Pollutant Property	Maximum for Any One Day	Maximum for Monthly Average
	mg/kg (lb/million lbs) of titanium produced	
Antimony	2.474	1.103
Cadmium	0.256	0.103
*Chromium	0.474	0.192
Copper	1.641	0.782
*Lead	0.359	0.167
*Nickel	0.705	0.474
Thallium	1.795	0.782
Zinc	1.308	0.538
*Titanium	0.679	0.295

(h) Chip Crushing Wet Air Pollution Control BAT

Pollutant or Pollutant Property	Maximum for Any One Day	Maximum for Monthly Average
	mg/kg (lb/million lbs) of titanium produced	
Antimony	4.424	1.971
Cadmium	0.458	0.183
*Chromium	0.848	0.344
Copper	2.934	1.398
*Lead	0.642	0.298
*Nickel	1.261	0.848
Thallium	3.209	1.398
Zinc	2.338	0.963
*Titanium	1.215	0.527

*Regulated Pollutant

TABLE X-5 (Continued)

BAT MASS LIMITATIONS FOR THE
PRIMARY AND SECONDARY TITANIUM SUBCATEGORY

(i) Acid Leachate and Rinse Water BAT

Pollutant or Pollutant Property	Maximum for Any One Day	Maximum for Monthly Average
	mg/kg (lb/million lbs) of titanium produced	
Antimony	22.850	10.180
Cadmium	2.368	0.947
*Chromium	4.381	1.776
Copper	15.160	7.222
*Lead	3.315	1.539
*Nickel	6.512	4.381
Thallium	16.580	7.222
Zinc	12.080	4.973
*Titanium	6.275	2.723

(j) Sponge Crushing and Screening Wet APC BAT

Pollutant or Pollutant Property	Maximum for Any One Day	Maximum for Monthly Average
	mg/kg (lb/million lbs) of titanium produced	
Antimony	1.249	0.556
Cadmium	0.129	0.052
*Chromium	0.239	0.097
Copper	0.828	0.395
*Lead	0.181	0.084
*Nickel	0.356	0.239
Thallium	0.906	0.395
Zinc	0.660	0.272
*Titanium	0.343	0.149

*Regulated Pollutant

Table X-5 (Continued)

BAT MASS LIMITATIONS FOR THE
PRIMARY AND SECONDARY TITANIUM SUBCATEGORY

(k) Acid Pickle and Wash Water BAT

Pollutant or Pollutant Property	Maximum for Any One Day	Maximum for Monthly Average
	mg/kg (lb/million lbs) of titanium pickled	
Antimony	0.118	0.053
Cadmium	0.012	0.005
*Chromium	0.023	0.009
Copper	0.078	0.037
*Lead	0.017	0.008
*Nickel	0.034	0.023
Thallium	0.085	0.037
Zinc	0.062	0.026
*Titanium	0.032	0.014

(l) Scrap Milling Wet Air Pollution Control BAT

Pollutant or Pollutant Property	Maximum for Any One Day	Maximum for Monthly Average
	mg/kg (lb/million lbs) of scrap milled	
Antimony	0.438	0.195
Cadmium	0.045	0.018
*Chromium	0.084	0.034
Copper	0.291	0.138
*Lead	0.064	0.030
*Nickel	0.125	0.084
Thallium	0.318	0.138
Zinc	0.232	0.095
*Titanium	0.120	0.052

*Regulated Pollutant

TABLE X-5 (Continued)

BAT MASS LIMITATIONS FOR THE
PRIMARY AND SECONDARY TITANIUM SUBCATEGORY

(m) Scrap Detergent Wash Water BAT

Pollutant or Pollutant Property	Maximum for Any One Day	Maximum for Monthly Average
	mg/kg (lb/million lbs) of scrap washed	
Antimony	34.860	15.540
Cadmium	3.613	1.445
*Chromium	6.684	2.710
Copper	23.120	11.020
*Lead	5.058	2.348
*Nickel	9.935	6.684
Thallium	25.290	11.020
Zinc	18.430	7.587
*Titanium	9.574	4.155

(n) Casting Crucible Wash Water BAT

Pollutant or Pollutant Property	Maximum for Any One Day	Maximum for Monthly Average
	mg/kg (lb/million lbs) of titanium cast	
Antimony	0.921	0.410
Cadmium	0.095	0.038
*Chromium	0.176	0.072
Copper	0.611	0.291
*Lead	0.134	0.062
*Nickel	0.262	0.176
Thallium	0.668	0.291
Zinc	0.487	0.200
*Titanium	0.253	0.110

*Regulated Pollutant

TABLE X-5 (Continued)

BAT MASS LIMITATIONS FOR THE
PRIMARY AND SECONDARY TITANIUM SUBCATEGORY

(o) Casting Contact Cooling Water BAT

Pollutant or Pollutant Property	Maximum for Any One Day	Maximum for Monthly Average
	mg/kg (lb/million lbs) of titanium cast	
Antimony	140.800	62.760
Cadmium	14.590	5.838
*Chromium	27.000	10.950
Copper	93.410	44.510
*Lead	20.430	9.486
*Nickel	40.140	27.000
Thallium	102.200	44.510
Zinc	74.430	30.650
*Titanium	38.680	16.780

*Regulated Pollutant

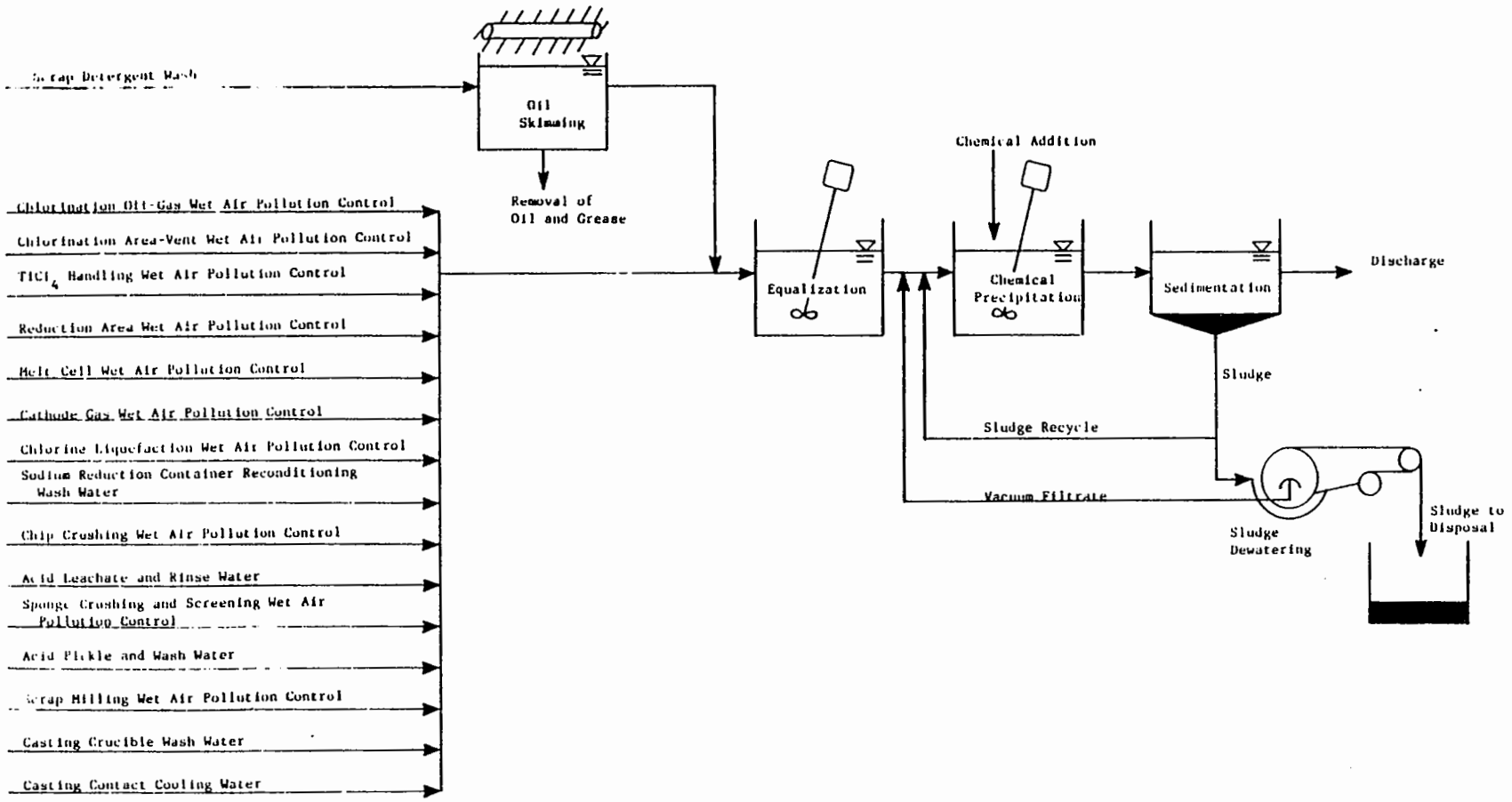

Figure X-1

BAT TREATMENT SCHEME FOR OPTION A

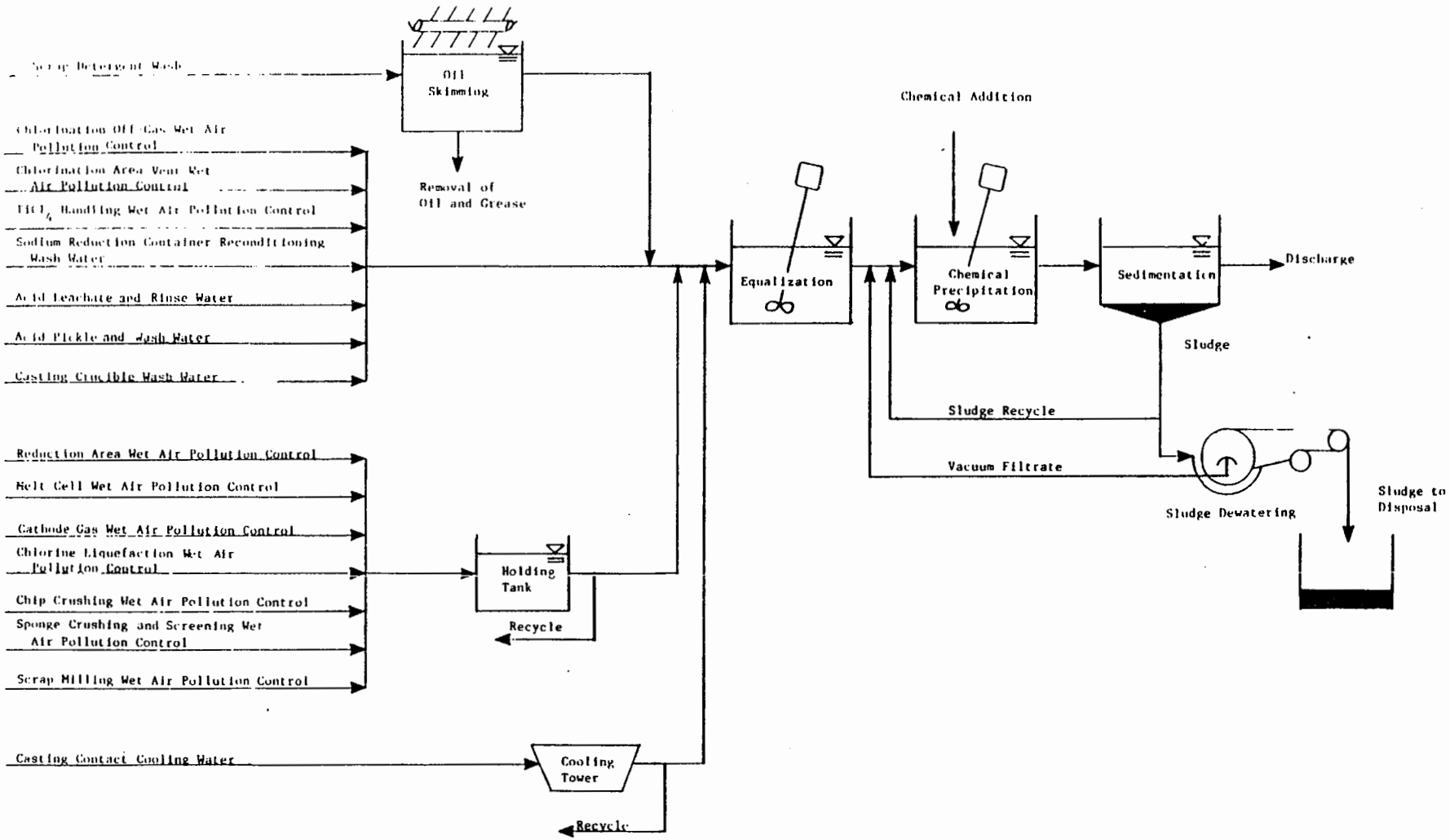

Figure X-2

BAT TREATMENT SCHEME FOR OPTION B

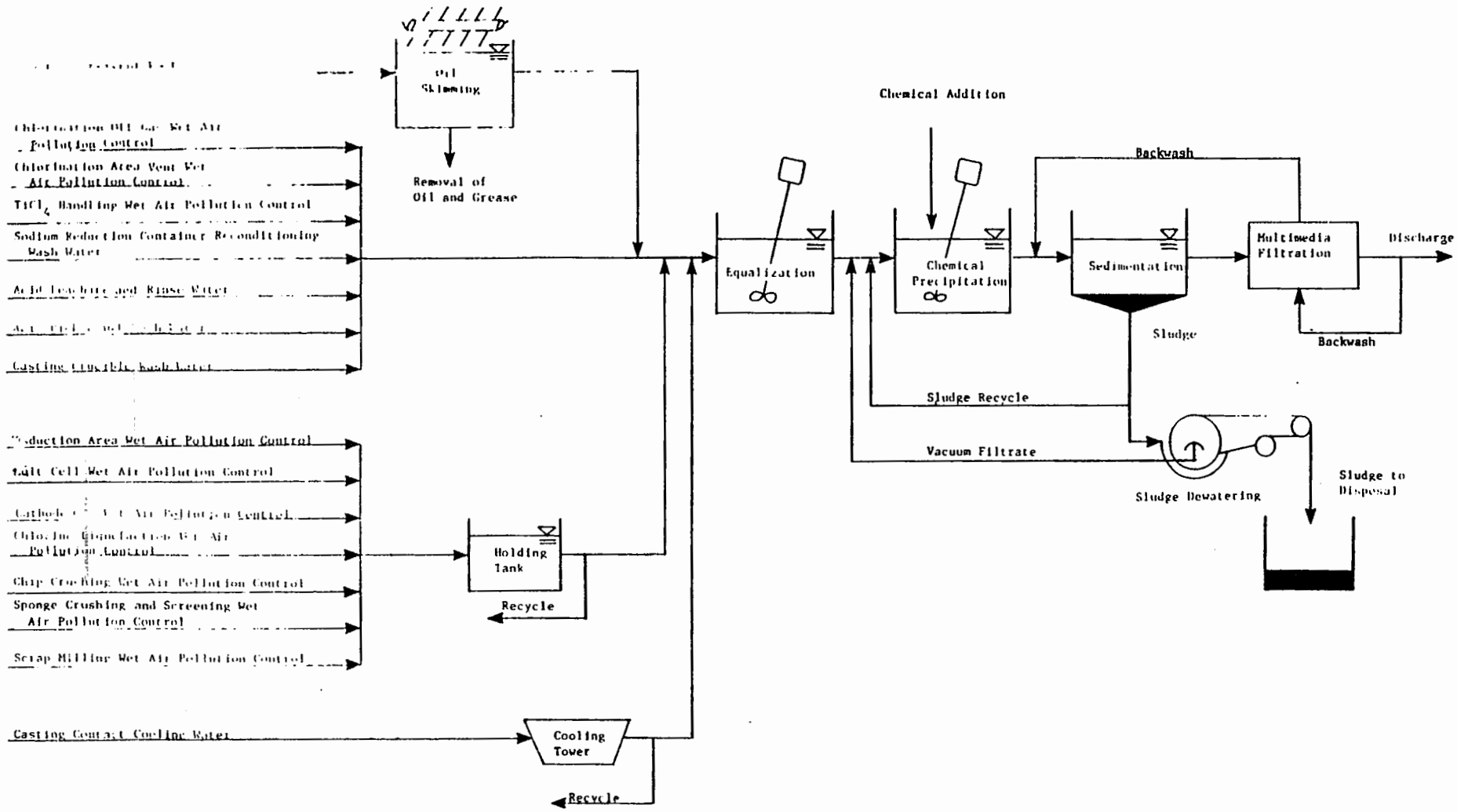

Figure X-3

BAT TREATMENT SCHEME FOR OPTION C

SECTION XI

NEW SOURCE PERFORMANCE STANDARDS

This section describes the technologies for treatment of wastewater from new sources and presents mass discharge standards for regulatory pollutants for NSPS in the primary and secondary titanium subcategory, based on the selected treatment technology. New plants have the opportunity to design the best and most efficient production processes and wastewater treatment technologies without facing the added costs and restrictions encountered in retrofitting an existing plant. Therefore, EPA has considered the best demonstrated process changes, in-plant controls and end-of-pipe treatment technologies which reduce pollution to the maximum extent feasible as the basis for NSPS.

TECHNICAL APPROACH TO NSPS

New source performance standards are generally equivalent to the best available technology (BAT) selected for currently existing plants. This is a consequence of careful review by the Agency of a wide range of technical options for new source treatment systems which is discussed in Section XI of the General Development Document. This review of the primary and secondary titanium subcategory, however, found new and economically feasible, demonstrated technologies which are considered an improvement over those chosen for consideration for BAT. These new technologies are based on dry scrubbing and by-product recovery of a salable product. There was nothing found to indicate that the characteristics of new plants would not be similar to those from existing plants, since the processes used by new sources are not expected to differ from those used at existing sources. Consequently, BAT production normalized discharge rates, which are based on the best existing practices of the subcategory, can also be applied to new sources, with the additional flow restrictions for selected waste streams based on dry scrubbing and by-product recovery. These additional flow reduction measures are further explained in the NSPS Option Selection paragraph on the following page. The NSPS discharge rates are presented in Table XI-1 (page 5002).

Treatment technologies considered for the NSPS options are identical to the treatment technologies considered for the BAT options. These options are:

OPTION A

- o Preliminary treatment consisting of oil skimming (where required)
- o Chemical precipitation and sedimentation

OPTION B

- o Preliminary treatment consisting of oil skimming (where required)
- o Chemical precipitation and sedimentation
- o In-process flow reduction

OPTION C

- o Preliminary treatment consisting of oil skimming (where required)
- o Chemical precipitation and sedimentation
- o In-process flow reduction
- o Multimedia filtration

NSPS OPTION SELECTION - PROPOSAL

EPA proposed that NSPS be equal to BAT for the titanium subcategory with additional flow reduction for four streams. Zero discharge was proposed for chip crushing, sponge crushing and screening, and scrap milling wet air pollution control wastewater based on dry scrubbing. Zero discharge was also proposed for chlorine liquefaction wet air pollution control based on by-product recovery of scrubber liquor as hypochlorous acid. All other wastewater discharge rates are the same as proposed for BAT.

NSPS OPTION SELECTION - PROMULGATION

NSPS is promulgated equal to BAT plus flow reduction technology with additional flow reduction applied to four wastewater streams. Zero wastewater discharge is established as the NSPS regulatory flow for chip crushing, sponge crushing and screening, and scrap milling wet air pollution control wastewater based on dry scrubbing. Zero discharge is also applied for chlorine liquefaction wet air pollution control based on by-product recovery of scrubber liquor as hypochlorous acid.

Cost for dry scrubbing air pollution control in a new facility is no greater than the cost for wet scrubbing which was the basis for BAT cost estimates. We believe that the promulgated NSPS are economically achievable, and that they will not pose a barrier to the entry of new plants into this subcategory.

REGULATED POLLUTANT PARAMETERS

The Agency has no reason to believe that the pollutants that will be found in treatable concentrations in processes within new sources will be any different than with existing sources.

Accordingly, toxic pollutants selected for limitation under NSPS, in accordance with the rationale of Sections VI and X, are identical to those selected for promulgated BAT. The conventional pollutant parameters oil and grease, TSS, and pH are also selected for limitation.

NEW SOURCE PERFORMANCE STANDARDS

The NSPS discharge flows for each wastewater source are shown in Table XI-1 (page 5002). The mass of pollutant allowed to be discharged per mass of product is calculated by multiplying the appropriate treatable concentration (mg/l) by the production normalized wastewater discharge flows (l/kkg). The results of these calculations are the production-based new source performance standards. These standards are presented in Table XI-2 (page 5004).

Table XI-1

NSPS WASTEWATER DISCHARGE RATES FOR THE PRIMARY AND SECONDARY TITANIUM SUBCATEGORY

Wastewater Stream	NSPS Normalized Discharge Rate		Production Normalizing Parameter (kkg)
	l/kkg	gal/ton	
Chlorination off-gas wet air pollution control	936	224	$TiCl_4$ produced
Chlorination area-vent wet air pollution control	1,040	249	$TiCl_4$ produced
$TiCl_4$ handling wet air pollution control	187	45	$TiCl_4$ handled
Reduction area wet air pollution control	4,130	990	Titanium produced
Melt cell wet air pollution control	2,126	509	Titanium produced
Chlorine liquefaction wet air pollution control	0	0	Titanium produced
Sodium reduction container reconditioning wash water	1,282	307	Titanium produced
Chip crushing wet air pollution control	0	0	Titanium produced
Acid leachate and rinse water	11,840	2,837	Titanium produced

Table XI-1 (Continued)

NSPS WASTEWATER DISCHARGE RATES FOR THE PRIMARY AND SECONDARY TITANIUM SUBCATEGORY

Wastewater Stream	NSPS Normalized Discharge Rate		Production Normalizing Parameter (kkg)
	l/kkg	gal/ton	
Sponge crushing and screening wet air pollution control	0	0	Titanium produced
Acid pickle and wash water	61	15	Titanium pickled
Scrap milling wet air pollution control	0	0	Scrap milled
Scrap detergent wash water	18,064	4,335	Scrap washed
Casting crucible wash water	477	114	Titanium cast
Casting contact cooling water	72,973	17,514	Titanium cast

TABLE XI-2

NSPS FOR THE PRIMARY AND SECONDARY TITANIUM SUBCATEGORY

(a) Chlorination Off-Gas Wet Air Pollution Control NSPS

Pollutant or Pollutant Property	Maximum for Any One Day	Maximum for Monthly Average
mg/kg (lb/million lbs) of $TiCl_4$ produced		
Antimony	1.806	0.805
Cadmium	0.187	0.075
*Chromium	0.346	0.140
Copper	1.198	0.571
*Lead	0.262	0.122
*Nickel	0.515	0.346
Thallium	1.310	0.571
Zinc	0.955	0.393
*Titanium	0.496	0.215
*Oil and Grease	9.360	9.360
*TSS	14.040	11.230
*pH	Within the range of 7.5 to 10.0 at all times	

(b) Chlorination Area-Vent Wet Air Pollution Control NSPS

Pollutant or Pollutant Property	Maximum for Any One Day	Maximum for Monthly Average
mg/kg (lb/million lbs) of $TiCl_4$ produced		
Antimony	2.007	0.894
Cadmium	0.208	0.083
*Chromium	0.385	0.156
Copper	1.331	0.634
*Lead	0.291	0.135
*Nickel	0.572	0.385
Thallium	1.456	0.634
Zinc	1.061	0.437
*Titanium	0.551	0.239
*Oil and Grease	10.400	10.400
*TSS	15.600	12.480
*pH	Within the range of 7.5 to 10.0 at all times	

*Regulated Pollutant

TABLE XI-2 (Continued)

NSPS FOR THE PRIMARY AND SECONDARY TITANIUM SUBCATEGORY

(c) $TiCl_4$ Handling Wet Air Pollution Control NSPS

Pollutant or Pollutant Property	Maximum for Any One Day	Maximum for Monthly Average
mg/kg (lb/million lbs) of $TiCl_4$ handled		
Antimony	0.361	0.161
Cadmium	0.037	0.015
*Chromium	0.069	0.028
Copper	0.239	0.114
*Lead	0.052	0.024
*Nickel	0.103	0.069
Thallium	0.262	0.114
Zinc	0.191	0.079
*Titanium	0.099	0.043
*Oil and Grease	1.870	1.870
*TSS	2.805	2.244
*pH	Within the range of 7.5 to 10.0 at all times	

(d) Reduction Area Wet Air Pollution Control NSPS

Pollutant or Pollutant Property	Maximum for Any One Day	Maximum for Monthly Average
mg/kg (lb/million lbs) of titanium produced		
Antimony	7.971	3.552
Cadmium	0.826	0.330
*Chromium	1.528	0.620
Copper	5.286	2.519
*Lead	1.156	0.537
*Nickel	2.272	1.528
Thallium	5.782	2.519
Zinc	4.213	1.735
*Titanium	2.189	0.950
*Oil and Grease	41.300	41.300
*TSS	61.950	49.560
*pH	Within the range of 7.5 to 10.0 at all times	

*Regulated Pollutant

TABLE XI-2 (Continued)

NSPS FOR THE PRIMARY AND SECONDARY TITANIUM SUBCATEGORY

(e) Cell Wet Air Pollution Control NSPS

Pollutant or Pollutant Property	Maximum for Any One Day	Maximum for Monthly Average
	mg/kg (lb/million lbs) of titanium produced	
Antimony	4.103	1.828
Cadmium	0.425	0.170
*Chromium	0.787	0.319
Copper	2.721	1.297
*Lead	0.595	0.276
*Nickel	1.169	0.787
Thallium	2.976	1.297
Zinc	2.169	0.893
*Titanium	1.127	0.489
*Oil and Grease	21.260	21.260
*TSS	31.890	25.510
*pH	Within the range of 7.5 to 10.0 at all times	

(f) Chlorine Liquefaction Wet Air Pollution Control NSPS

Pollutant or Pollutant Property	Maximum for Any One Day	Maximum for Monthly Average
	mg/kg (lb/million lbs) of titanium produced	
Antimony	0.000	0.000
Cadmium	0.000	0.000
*Chromium	0.000	0.000
Copper	0.000	0.000
*Lead	0.000	0.000
*Nickel	0.000	0.000
Thallium	0.000	0.000
Zinc	0.000	0.000
*Titanium	0.000	0.000
*Oil and Grease	0.000	0.000
*TSS	0.000	0.000
*pH	Within the range of 7.5 to 10.0 at all times	

*Regulated Pollutant

TABLE XI-2 (Continued)

NSPS FOR THE PRIMARY AND SECONDARY TITANIUM SUBCATEGORY

(g) Sodium Reduction Container Reconditioning Wash Water NSPS

Pollutant or Pollutant Property	Maximum for Any One Day	Maximum for Monthly Average
	mg/kg (lb/million lbs) of titanium produced	
Antimony	2.474	1.103
Cadmium	0.256	0.103
*Chromium	0.474	0.192
Copper	1.641	0.782
*Lead	0.359	0.167
*Nickel	0.705	0.474
Thallium	1.795	0.782
Zinc	1.308	0.538
*Titanium	0.679	0.295
*Oil and Grease	12.820	12.820
*TSS	19.230	15.380
*pH	Within the range of 7.5 to 10.0 at all times	

(h) Chip Crushing Wet Air Pollution Control NSPS

Pollutant or Pollutant Property	Maximum for Any One Day	Maximum for Monthly Average
mg/kg (lb/million lbs) of titanium produced		
Antimony	0.000	0.000
Cadmium	0.000	0.000
*Chromium	0.000	0.000
Copper	0.000	0.000
*Lead	0.000	0.000
*Nickel	0.000	0.000
Thallium	0.000	0.000
Zinc	0.000	0.000
*Titanium	0.000	0.000
*Oil and Grease	0.000	0.000
*TSS	0.000	0.000
*pH	Within the range of 7.5 to 10.0 at all times	

*Regulated Pollutant

TABLE XI-2 (Continued)

NSPS FOR THE PRIMARY AND SECONDARY TITANIUM SUBCATEGORY

(i) Acid Leachate and Rinse Water NSPS

Pollutant or Pollutant Property	Maximum for Any One Day	Maximum for Monthly Average
	mg/kg (lb/million lbs) of titanium produced	
Antimony	22.850	10.180
Cadmium	2.368	0.947
*Chromium	4.381	1.776
Copper	15.160	7.222
*Lead	3.315	1.539
*Nickel	6.512	4.381
Thallium	16.580	7.222
Zinc	12.080	4.973
*Titanium	6.275	2.723
*Oil and Grease	118.400	118.400
*TSS	177.600	142.100
*pH	Within the range of 7.5 to 10.0 at all times	

(j) Sponge Crushing and Screening Wet APC NSPS

Pollutant or Pollutant Property	Maximum for Any One Day	Maximum for Monthly Average
	mg/kg (lb/million lbs) of titanium produced	
Antimony	0.000	0.000
Cadmium	0.000	0.000
*Chromium	0.000	0.000
Copper	0.000	0.000
*Lead	0.000	0.000
*Nickel	0.000	0.000
Thallium	0.000	0.000
Zinc	0.000	0.000
*Titanium	0.000	0.000
*Oil and Grease	0.000	0.000
*TSS	0.000	0.000
*pH	Within the range of 7.5 to 10.0 at all times	

*Regulated Pollutant

TABLE XI-2 (Continued)

NSPS FOR THE PRIMARY AND SECONDARY TITANIUM SUBCATEGORY

(k) Acid Pickle and Wash Water NSPS

Pollutant or Pollutant Property	Maximum for Any One Day	Maximum for Monthly Average
	mg/kg (lb/million lbs) of titanium pickled	
Antimony	0.118	0.053
Cadmium	0.012	0.005
*Chromium	0.023	0.009
Copper	0.078	0.037
*Lead	0.017	0.008
*Nickel	0.034	0.023
Thallium	0.085	0.037
Zinc	0.062	0.026
*Titanium	0.032	0.014
*Oil and Grease	0.610	0.610
*TSS	0.915	0.732
*pH	Within the range of 7.5 to 10.0 at all times	

(l) Scrap Milling Wet Air Pollution Control NSPS

Pollutant or Pollutant Property	Maximum for Any One Day	Maximum for Monthly Average
	mg/kg (lb/million lbs) of scrap milled	
Antimony	0.000	0.000
Cadmium	0.000	0.000
*Chromium	0.000	0.000
Copper	0.000	0.000
*Lead	0.000	0.000
*Nickel	0.000	0.000
Thallium	0.000	0.000
Zinc	0.000	0.000
*Titanium	0.000	0.000
*Oil and Grease	0.000	0.000
*TSS	0.000	0.000
*pH	Within the range of 7.5 to 10.0 at all times	

*Regulated Pollutant

TABLE XI-2 (Continued)

NSPS FOR THE PRIMARY AND SECONDARY TITANIUM SUBCATEGORY

(m) Scrap Detergent Wash Water NSPS

Pollutant or Pollutant Property	Maximum for Any One Day	Maximum for Monthly Average
	mg/kg (lb/million lbs) of scrap washed	
Antimony	34.860	15.540
Cadmium	3.613	1.445
*Chromium	6.684	2.710
Copper	23.120	11.020
*Lead	5.058	2.348
*Nickel	9.935	6.684
Thallium	25.290	11.020
Zinc	18.430	7.587
*Titanium	9.574	4.155
*Oil and Grease	180.600	180.600
*TSS	271.000	216.800
*pH	Within the range of 7.5 to 10.0 at all times	

(n) Casting Crucible Wash Water NSPS

Pollutant or Pollutant Property	Maximum for Any One Day	Maximum for Monthly Average
	mg/kg (lb/million lbs) of titanium cast	
Antimony	0.921	0.410
Cadmium	0.095	0.038
*Chromium	0.176	0.072
Copper	0.611	0.291
*Lead	0.134	0.062
*Nickel	0.262	0.176
Thallium	0.668	0.291
Zinc	0.487	0.200
*Titanium	0.253	0.110
*Oil and Grease	4.770	4.770
*TSS	7.155	5.724
*pH	Within the range of 7.5 to 10.0 at all times	

*Regulated Pollutant

TABLE XI-2 (Continued)

NSPS FOR THE PRIMARY AND SECONDARY TITANIUM SUBCATEGORY

(o) Casting Contact Cooling Water NSPS

Pollutant or Pollutant Property	Maximum for Any One Day	Maximum for Monthly Average
	mg/kg (lb/million lbs) of titanium cast	
Antimony	140.800	62.760
Cadmium	14.590	5.838
*Chromium	27.000	10.950
Copper	93.410	44.510
*Lead	20.430	9.486
*Nickel	40.140	27.000
Thallium	102.200	44.510
Zinc	74.430	30.650
*Titanium	38.680	16.780
*Oil and Grease	729.700	729.700
*TSS	1,095.000	875.700
*pH	Within the range of 7.5 to 10.0 at all times	

*Regulated Pollutant

THIS PAGE INTENTIONALLY LEFT BLANK

SECTION XII

PRETREATMENT STANDARDS

This section describes the control and treatment technologies for pretreatment of process wastewaters from existing sources and new sources in the primary and secondary titanium subcategory. PSES are designed to prevent the discharge of pollutants which pass through, interfere with, or are otherwise incompatible with the operation of publicly owned treatment works (POTW). The Clean Water Act requires pretreatment for pollutants, such as toxic metals, that limit POTW sludge management alternatives. New indirect discharge facilities, like new direct discharge facilities, have the opportunity to incorporate the best available demonstrated technologies, including process changes, in-plant controls, and end-of-pipe treatment technologies, and to use plant site selection to ensure adequate treatment system function. Pretreatment standards are to be technology based, analogous to the best available or demonstrated technology for removal of toxic pollutants. Pretreatment standards for regulated pollutants are presented based on the selected control and treatment technology.

TECHNICAL APPROACH TO PRETREATMENT

Before proposing and promulgating pretreatment standards, the Agency examines whether the pollutants discharged by the industry pass through the POTW or interfere with the POTW operation or its chosen sludge disposal practices. In determining whether pollutants pass through a well-operated POTW achieving secondary treatment, the Agency compares the percentage of a pollutant removed by POTW with the percentage removed by direct dischargers applying the best available technology economically achievable. A pollutant is deemed to pass through the POTW when the average percentage removed nationwide by well-operated POTW meeting secondary treatment requirements, is less than the percentage removed by direct dischargers complying with BAT effluent limitations guidelines for that pollutant.

This definition of pass through satisfies the competing objectives set by Congress that standards for indirect dischargers be equivalent to standards for direct dischargers while at the same time the treatment capability and performance of the POTW be recognized and taken into account in regulating the discharge of pollutants from indirect dischargers. The Agency compares percentage removal rather than the mass or concentration of pollutants discharged because the latter would not take into account the mass of pollutants discharged to the POTW from non-industrial sources or the dilution of the pollutants in the POTW effluent to lower concentrations due to the addition of large amounts of non-industrial wastewater.

INDUSTRY COST AND POLLUTANT REMOVAL ESTIMATES

The industry cost and pollutant removal estimates of each treatment option were used to determine the most cost-effective option. The methodology applied in calculating pollutant removal estimates and plant compliance costs is discussed in Section X. Table XII-1 (page 5016) shows the estimated pollutant removals for indirect dischargers. Compliance costs for indirect dischargers are presented in Table XII-2 (page 5017).

PRETREATMENT STANDARDS FOR EXISTING AND NEW SOURCES

Options for pretreatment of wastewaters from both existing and new sources are based on increasing the effectiveness of end-of-pipe treatment technologies. All in-plant changes and applicable end-of-pipe treatment processes have been discussed previously in Sections X and XI. The options for PSNS and PSES, therefore, are the same as the BAT options discussed in Section X. A description of each option is presented in Section X.

Treatment technologies considered for the PSNS and PSES options are:

OPTION A

- o Preliminary treatment consisting of oil skimming (where required)
- o Chemical precipitation and sedimentation

OPTION B

- o Preliminary treatment consisting of oil skimming (where required)
- o Chemical precipitation and sedimentation
- o In-process flow reduction

OPTION C

- o Preliminary treatment consisting of oil skimming (where required)
- o Chemical precipitation and sedimentation
- o In-process flow reduction
- o Multimedia filtration

PSES OPTION SELECTION - PROPOSAL

EPA proposed PSES equal to BAT for the primary and secondary titanium subcategory. EPA believed it necessary to propose PSES to avoid pass-through of chromium, lead, nickel, thallium, titanium, and fluoride, which were the pollutants specifically proposed for regulation under PSES.

Wastewater discharge allowances for PSES were the same as those for proposed BAT. Implementation of proposed PSES was estimated

to remove 1.7 kilograms of priority pollutants and 147 kilograms of titanium annually.

PSES OPTION SELECTION - PROMULGATION

We are promulgating PSES equal to BAT for this subcategory. It is necessary to promulgate PSES to avoid pass-through of chromium, lead, nickel, and titanium. The four pollutants are removed by a well-operated POTW achieving secondary treatment at an average of 14 percent while BAT removes approximately 76 percent. Discharge allowances for PSES are the same as BAT allowances, and are shown in Table XII-3 (page 5018).

Implementation of promulgated PSES would remove annually an estimated 1.7 kg of toxic pollutants and 147 kg of titanium.

The costs and specific removal data for this subcategory are not presented here because the data on which they are based has been claimed to be confidential. The promulgated PSES will not result in adverse economic impacts.

PSNS OPTION SELECTION - PROPOSAL

EPA proposed Level A and Level B PSNS equivalent to NSPS. The technology basis for proposed PSNS and NSPS were identical. The same pollutants were proposed for regulation at PSNS as at PSES, for the same reasons. Wastewater discharge rates proposed for PSNS were equivalent to those at NSPS, including flow reduction beyond that proposed at BAT for four waste streams. EPA believed that the proposed PSNS were achievable and were not an economic barrier to entry of new plants into this subcategory.

PSNS OPTION SELECTION - PROMULGATION

We are promulgating PSNS equivalent to NSPS. The technology basis for promulgated PSNS is identical to NSPS. The same pollutants are regulated at PSNS as at PSES and they pass through at PSNS as at PSES, for the same reasons. The PSNS and NSPS flow allowances are based on minimization of process wastewater wherever possible through the use of cooling towers to recycle contact cooling water and holding tanks for wet scrubbing wastewater. The discharge allowance for pollutants is the same at PSNS and NSPS (See Table XII-4, page 5020). The discharges are based on 90 percent recycle of these waste streams. As in NSPS, flow reduction beyond BAT is promulgated for chip crushing, sponge crushing and screening, and scrap milling wet air pollution control wastewater based on dry scrubbing. Zero discharge allowance for pollutants is also promulgated for chlorine liquefaction wet air pollution control based on by-product recovery of scrubber liquor as hypochlorous acid.

We believe that the promulgated PSNS are achievable, and that they are not a barrier to entry of new plants into this

subcategory.

REGULATED POLLUTANT PARAMETERS

Pollutants selected for limitation, in accordance with the rationale of Sections VI and X, are identical to those selected for limitation for BAT. It is necessary to promulgate PSES and PSNS to prevent the pass-through of chromium, lead, nickel, and titanium, which are the limited pollutants.

PRETREATMENT STANDARDS

Pretreatment standards, PSES and PSNS, are based on the treatable concentrations from the selected treatment technology, (Option C), and the discharge rates determined in Section X for BAT, and Section XI for NSPS, respectively. A mass of pollutant per mass of product (mg/kg) allocation is given for each subdivision within the subcategory. This pollutant allocation is based on the product of the treatable concentration from the promulgated treatment (mg/l) and the production normalized wastewater discharge rate. The achievable treatment concentrations for PSES and PSNS are identical to those for BAT. PSES and PSNS are presented in Tables XII-5 and XII-6 (pages 5022 and 5030).

Table XII-1

POLLUTANT REMOVAL ESTIMATES FOR INDIRECT DISCHARGERS IN THE PRIMARY AND SECONDARY TITANIUM SUBCATEGORY

Pollutant	Raw Waste (kg/yr)	Option A Discharge (kg/yr)	Option A Removed (kg/yr)	Option B Discharge (kg/yr)	Option B Removed (kg/yr)	Option C Discharge (kg/yr)	Option C Removed (kg/yr)
Antimony	0.030	0.029	0.001	0.027	0.002	0.027	0.002
Arsenic	0.028	0.027	0.001	0.026	0.002	0.026	0.002
Cadmium	0.013	0.013	0	0.012	0.001	0.012	0.001
Chromium (total)	1.608	1.564	0.044	1.479	0.130	1.478	0.131
Copper	0.794	0.764	0.029	0.729	0.065	0.729	0.065
Cyanide (total)	0.023	0.022	0.001	0.021	0.002	0.021	0.002
Lead	0.309	0.290	0.019	0.276	0.032	0.276	0.032
Mercury	0.008	0.007	0	0.007	0.001	0.007	0.001
Nickel	2.663	2.560	0.104	2.441	0.223	2.441	0.223
Selenium	0.073	0.071	0.003	0.067	0.006	0.067	0.006
Silver	0.004	0.004	0	0.004	0	0.004	0
Thallium	0.046	0.039	0.006	0.038	0.008	0.037	0.009
Zinc	1.870	1.801	0.069	1.717	0.153	1.717	0.153
TOTAL PRIORITY POLLUTANTS	7.469	7.191	0.278	6.844	0.625	6.842	0.627
Titanium	163.114	20.302	142.812	16.706	146.409	8.778	154.336
Fluoride	0.002	0	0.002	0	0.002	0	0.002
TOTAL NONCONVENTIONALS	163.117	20.302	142.815	16.706	146.412	8.778	154.339
TSS	1,407.727	243.710	1,164.018	200.551	1,207.176	38.058	1,369.669
Oil and Grease	548.610	528.961	19.649	504.362	44.248	504.362	44.248
TOTAL CONVENTIONALS	1,956.337	772.671	1,183.667	704.913	1,251.424	542.420	1,413.917
TOTAL POLLUTANTS	2,126.923	800.164	1,326.759	728.463	1,398.460	558.040	1,568.883

TABLE XII-2

COST OF COMPLIANCE FOR THE
PRIMARY AND SECONDARY TITANIUM SUBCATEGORY
INDIRECT DISCHARGERS

Compliance costs are not presented here for this subcategory because the data on which they are based have been claimed to be confidential.

Table XII-3

PSES WASTEWATER DISCHARGE RATES FOR THE PRIMARY AND SECONDARY TITANIUM SUBCATEGORY

Wastewater Stream	PSES Normalized Discharge Rate l/kkg	PSES Normalized Discharge Rate gal/ton	Production Normalizing Parameter (kkg)
Chlorination off-gas wet air pollution control	936	224	$TiCl_4$ produced
Chlorination area-vent wet air pollution control	1,040	249	$TiCl_4$ produced
$TiCl_4$ handling wet air pollution control	187	45	$TiCl_4$ handled
Reduction area wet air pollution control	4,130	990	Titanium produced
Melt cell wet air pollution control	2,126	509	Titanium produced
Chlorine liquefaction wet air pollution control	29,756	7,131	Titanium produced
Sodium reduction container reconditioning wash water	1,282	307	Titanium produced
Chip crushing wet air pollution control	2,292	549	Titanium produced
Acid leachate and rinse water	11,840	2,837	Titanium produced

Table XII-3 (Continued)

PSES WASTEWATER DISCHARGE RATES FOR THE PRIMARY AND SECONDARY TITANIUM SUBCATEGORY

Wastewater Stream	PSES Normalized Discharge Rate l/kkg	PSES Normalized Discharge Rate gal/ton	Production Normalizing Parameter (kkg)
Sponge crushing and screening wet air pollution control	647	155	Titanium produced
Acid pickle and wash water	61	15	Titanium pickled
Scrap milling wet air pollution control	227	55	Scrap milled
Scrap detergent wash water	18,064	4,335	Scrap washed
Casting crucible wash water	477	114	Titanium cast
Casting contact cooling water	72,973	17,514	Titanium cast

Table XII-4

PSNS WASTEWATER DISCHARGE RATES FOR THE PRIMARY AND SECONDARY TITANIUM SUBCATEGORY

Wastewater Stream	PSNS Normalized Discharge Rate l/kkg	PSNS Normalized Discharge Rate gal/ton	Production Normalizing Parameter (kkg)
Chlorination off-gas wet air pollution control	936	224	$TiCl_4$ produced
Chlorination area-vent wet air pollution control	1,040	249	$TiCl_4$ produced
$TiCl_4$ handling wet air pollution control	187	45	$TiCl_4$ handled
Reduction area wet air pollution control	4,130	990	Titanium produced
Melt cell wet air pollution control	2,126	509	Titanium produced
Chlorine liquefaction wet air pollution control	0	0	Titanium produced
Sodium reduction container reconditioning wash water	1,282	307	Titanium produced
Chip crushing wet air pollution control	0	0	Titanium produced
Acid leachate and rinse water	11,840	2,837	Titanium produced

Table XII-4 (Continued)

PSNS WASTEWATER DISCHARGE RATES FOR THE PRIMARY AND SECONDARY TITANIUM SUBCATEGORY

Wastewater Stream	PSNS Normalized Discharge Rate l/kkg	PSNS Normalized Discharge Rate gal/ton	Production Normalizing Parameter (kkg)
Sponge crushing and screening wet air pollution control	0	0	Titanium produced
Acid pickle and wash water	61	15	Titanium pickled
Scrap milling wet air pollution control	0	0	Scrap milled
Scrap detergent wash water	18,064	4,335	Scrap washed
Casting crucible wash water	477	114	Titanium cast
Casting contact cooling water	72,973	17,515	Titanium cast

TABLE XII-5

PSES FOR THE PRIMARY AND SECONDARY TITANIUM SUBCATEGORY

(a) Chlorination Off-Gas Wet Air Pollution Control PSES

Pollutant or Pollutant Property	Maximum for Any One Day	Maximum for Monthly Average
	mg/kg (lb/million lbs) of $TiCl_4$ produced	
Antimony	1.806	0.805
Cadmium	0.187	0.075
*Chromium	0.346	0.140
Copper	1.198	0.571
*Lead	0.262	0.122
*Nickel	0.515	0.346
Thallium	1.310	0.571
Zinc	0.955	0.393
*Titanium	0.496	0.215

(b) Chlorination Area-Vent Wet Air Pollution Control PSES

Pollutant or Pollutant Property	Maximum for Any One Day	Maximum for Monthly Average
mg/kg (lb/million lbs) of $TiCl_4$ produced		
Antimony	2.007	0.894
Cadmium	0.208	0.083
*Chromium	0.385	0.156
Copper	1.331	0.634
*Lead	0.291	0.135
*Nickel	0.572	0.385
Thallium	1.456	0.634
Zinc	1.061	0.437
*Titanium	0.551	0.239

*Regulated Pollutant

TABLE XII-5 (Continued)

PSES FOR THE PRIMARY AND SECONDARY TITANIUM SUBCATEGORY

(c) $TiCl_4$ Handling Wet Air Pollution Control PSES

Pollutant or Pollutant Property	Maximum for Any One Day	Maximum for Monthly Average
	mg/kg (lb/million lbs) of TiCl4 handled	
Antimony	0.361	0.161
Cadmium	0.037	0.015
*Chromium	0.069	0.028
Copper	0.239	0.114
*Lead	0.052	0.024
*Nickel	0.103	0.069
Thallium	0.262	0.114
Zinc	0.191	0.079
*Titanium	0.099	0.043

(d) Reduction Area Wet Air Pollution Control PSES

Pollutant or Pollutant Property	Maximum for Any One Day	Maximum for Monthly Average
	mg/kg (lb/million lbs) of titanium produced	
Antimony	7.971	3.552
Cadmium	0.826	0.330
*Chromium	1.528	0.620
Copper	5.286	2.519
*Lead	1.156	0.537
*Nickel	2.272	1.528
Thallium	5.782	2.519
Zinc	4.213	1.735
*Titanium	2.189	0.950

*Regulated Pollutant

TABLE XII-5 (Continued)

PSES FOR THE PRIMARY AND SECONDARY TITANIUM SUBCATEGORY

(e) Melt Cell Wet Air Pollution Control PSES

Pollutant or Pollutant Property	Maximum for Any One Day	Maximum for Monthly Average
	mg/kg (lb/million lbs) of titanium produced	
Antimony	4.103	1.828
Cadmium	0.425	0.170
*Chromium	0.787	0.319
Copper	2.721	1.297
*Lead	0.595	0.276
*Nickel	1.169	0.787
Thallium	2.976	1.297
Zinc	2.169	0.893
*Titanium	1.127	0.489

(f) Chlorine Liquefaction Wet Air Pollution Control PSES

Pollutant or Pollutant Property	Maximum for Any One Day	Maximum for Monthly Average
	mg/kg (lb/million lbs) of titanium produced	
Antimony	57.430	25.590
Cadmium	5.951	2.380
*Chromium	11.010	4.463
Copper	38.090	18.150
*Lead	8.332	3.868
*Nickel	16.370	11.010
Thallium	41.660	18.150
Zinc	30.350	12.500
*Titanium	15.770	6.844

*Regulated Pollutant

TABLE XII-5 (Continued)

PSES FOR THE PRIMARY AND SECONDARY TITANIUM SUBCATEGORY

(g) Sodium Reduction Container Reconditioning Wash Water PSES

Pollutant or Pollutant Property	Maximum for Any One Day	Maximum for Monthly Average
	mg/kg (lb/million lbs) of titanium produced	
Antimony	2.474	1.103
Cadmium	0.256	0.103
*Chromium	0.474	0.192
Copper	1.641	0.782
*Lead	0.359	0.167
*Nickel	0.705	0.474
Thallium	1.795	0.782
Zinc	1.308	0.538
*Titanium	0.679	0.295

(h) Chip Crushing Wet Air Pollution Control PSES

Pollutant or Pollutant Property	Maximum for Any One Day	Maximum for Monthly Average
	mg/kg (lb/million lbs) of titanium produced	
Antimony	4.424	1.971
Cadmium	0.458	0.183
*Chromium	0.848	0.344
Copper	2.934	1.398
*Lead	0.642	0.298
*Nickel	1.261	0.848
Thallium	3.209	1.398
Zinc	2.338	0.963
*Titanium	1.215	0.527

*Regulated Pollutant

TABLE XII-5 (Continued)

PSES FOR THE PRIMARY AND SECONDARY TITANIUM SUBCATEGORY

(i) Acid Leachate and Rinse Water PSES

Pollutant or Pollutant Property	Maximum for Any One Day	Maximum for Monthly Average
	mg/kg (lb/million lbs) of titanium produced	
Antimony	22.850	10.180
Cadmium	2.368	0.947
*Chromium	4.381	1.776
Copper	15.160	7.222
*Lead	3.315	1.539
*Nickel	6.512	4.381
Thallium	16.580	7.222
Zinc	12.080	4.973
*Titanium	6.275	2.723

(j) Sponge Crushing and Screening Wet APC PSES

Pollutant or Pollutant Property	Maximum for Any One Day	Maximum for Monthly Average
	mg/kg (lb/million lbs) of titanium produced	
Antimony	1.249	0.556
Cadmium	0.129	0.052
*Chromium	0.239	0.097
Copper	0.828	0.395
*Lead	0.181	0.084
*Nickel	0.356	0.239
Thallium	0.906	0.395
Zinc	0.660	0.272
*Titanium	0.343	0.149

*Regulated Pollutant

TABLE XII-5 (Continued)

PSES FOR THE PRIMARY AND SECONDARY TITANIUM SUBCATEGORY

(k) Acid Pickle and Wash Water PSES

Pollutant or Pollutant Property	Maximum for Any One Day	Maximum for Monthly Average
	mg/kg (lb/million lbs) of titanium pickled	
Antimony	0.118	0.053
Cadmium	0.012	0.005
*Chromium	0.023	0.009
Copper	0.078	0.037
*Lead	0.017	0.008
*Nickel	0.034	0.023
Thallium	0.085	0.037
Zinc	0.062	0.026
*Titanium	0.032	0.014

(l) Scrap Milling Wet Air Pollution Control PSES

Pollutant or Pollutant Property	Maximum for Any One Day	Maximum for Monthly Average
	mg/kg (lb/million lbs) of scrap milled	
Antimony	0.438	0.195
Cadmium	0.045	0.018
*Chromium	0.084	0.034
Copper	0.291	0.138
*Lead	0.064	0.030
*Nickel	0.125	0.084
Thallium	0.318	0.138
Zinc	0.232	0.095
*Titanium	0.120	0.052

*Regulated Pollutant

TABLE XII-5 (Continued)

PSES FOR THE PRIMARY AND SECONDARY TITANIUM SUBCATEGORY

(m) Scrap Detergent Wash Water PSES

Pollutant or Pollutant Property	Maximum for Any One Day	Maximum for Monthly Average
	mg/kg (lb/million lbs) of scrap washed	
Antimony	34.860	15.540
Cadmium	3.613	1.445
*Chromium	6.684	2.710
Copper	23.120	11.020
*Lead	5.058	2.348
*Nickel	9.935	6.684
Thallium	25.290	11.020
Zinc	18.430	7.587
*Titanium	9.574	4.155

(n) Casting Crucible Wash Water PSES

Pollutant or Pollutant Property	Maximum for Any One Day	Maximum for Monthly Average
	mg/kg (lb/million lbs) of titanium cast	
Antimony	0.921	0.410
Cadmium	0.095	0.038
*Chromium	0.176	0.072
Copper	0.611	0.291
*Lead	0.134	0.062
*Nickel	0.262	0.176
Thallium	0.668	0.291
Zinc	0.487	0.200
*Titanium	0.253	0.110

*Regulated Pollutant

TABLE XII-5 (Continued)

PSES FOR THE PRIMARY AND SECONDARY TITANIUM SUBCATEGORY

(o) Casting Contact Cooling Water PSES

Pollutant or Pollutant Property	Maximum for Any One Day	Maximum for Monthly Average
	mg/kg (lb/million lbs) of titanium cast	
Antimony	140.800	62.760
Cadmium	14.590	5.838
*Chromium	27.000	10.950
Copper	93.410	44.510
*Lead	20.430	9.486
*Nickel	40.140	27.000
Thallium	102.200	44.510
Zinc	74.430	30.650
*Titanium	38.680	16.780

*Regulated Pollutant

TABLE XII-6

PSNS FOR THE PRIMARY AND SECONDARY TITANIUM SUBCATEGORY

(a) Chlorination Off-Gas Wet Air Pollution Control PSNS

Pollutant or Pollutant Property	Maximum for Any One Day	Maximum for Monthly Average
mg/kg (lb/million lbs) of $TiCl_4$ produced		
Antimony	1.806	0.805
Cadmium	0.187	0.075
*Chromium	0.346	0.140
Copper	1.198	0.571
*Lead	0.262	0.122
*Nickel	0.515	0.346
Thallium	1.310	0.571
Zinc	0.955	0.393
*Titanium	0.496	0.215

(b) Chlorination Area-Vent Wet Air Pollution Control PSNS

Pollutant or Pollutant Property	Maximum for Any One Day	Maximum for Monthly Average
mg/kg (lb/million lbs) of $TiCl_4$ produced		
Antimony	2.007	0.894
Cadmium	0.208	0.083
*Chromium	0.385	0.156
Copper	1.331	0.634
*Lead	0.291	0.135
*Nickel	0.572	0.385
Thallium	1.456	0.634
Zinc	1.061	0.437
*Titanium	0.551	0.239

*Regulated Pollutant

TABLE XII-6 (Continued)

PSNS FOR THE PRIMARY AND SECONDARY TITANIUM SUBCATEGORY

(c) $TiCl_4$ Handling Wet Air Pollution Control PSNS

Pollutant or Pollutant Property	Maximum for Any One Day	Maximum for Monthly Average
mg/kg (lb/million lbs) of $TiCl_4$ handled		
Antimony	0.361	0.161
Cadmium	0.037	0.015
*Chromium	0.069	0.028
Copper	0.239	0.114
*Lead	0.052	0.024
*Nickel	0.103	0.069
Thallium	0.262	0.114
Zinc	0.191	0.079
*Titanium	0.099	0.043

(d) Reduction Area Wet Air Pollution Control PSNS

Pollutant or Pollutant Property	Maximum for Any One Day	Maximum for Monthly Average
mg/kg (lb/million lbs) of titanium produced		
Antimony	7.971	3.552
Cadmium	0.826	0.330
*Chromium	1.528	0.620
Copper	5.286	2.519
*Lead	1.156	0.537
*Nickel	2.272	1.528
Thallium	5.782	2.519
Zinc	4.213	1.735
*Titanium	2.189	0.950

*Regulated Pollutant

TABLE XII-6 (Continued)

PSNS FOR THE PRIMARY AND SECONDARY TITANIUM SUBCATEGORY

(e) Cell Wet Air Pollution Control PSNS

Pollutant or Pollutant Property	Maximum for Any One Day	Maximum for Monthly Average
	mg/kg (lb/million lbs) of titanium produced	
Antimony	4.103	1.828
Cadmium	0.425	0.170
*Chromium	0.787	0.319
Copper	2.721	1.297
*Lead	0.595	0.276
*Nickel	1.169	0.787
Thallium	2.976	1.297
Zinc	2.169	0.893
*Titanium	1.127	0.489

(f) Chlorine Liquefaction Wet Air Pollution Control PSNS

Pollutant or Pollutant Property	Maximum for Any One Day	Maximum for Monthly Average
	mg/kg (lb/million lbs) of titanium produced	
Antimony	0.000	0.000
Cadmium	0.000	0.000
*Chromium	0.000	0.000
Copper	0.000	0.000
*Lead	0.000	0.000
*Nickel	0.000	0.000
Thallium	0.000	0.000
Zinc	0.000	0.000
*Titanium	0.000	0.000

*Regulated Pollutant

TABLE XII-6 (Continued)

PSNS FOR THE PRIMARY AND SECONDARY TITANIUM SUBCATEGORY

(g) Sodium Reduction Container Reconditioning Wash Water PSNS

Pollutant or Pollutant Property	Maximum for Any One Day	Maximum for Monthly Average
	mg/kg (lb/million lbs) of titanium produced	
Antimony	2.474	1.103
Cadmium	0.256	0.103
*Chromium	0.474	0.192
Copper	1.641	0.782
*Lead	0.359	0.167
*Nickel	0.705	0.474
Thallium	1.795	0.782
Zinc	1.308	0.538
*Titanium	0.679	0.295

(h) Chip Crushing Wet Air Pollution Control PSNS

Pollutant or Pollutant Property	Maximum for Any One Day	Maximum for Monthly Average
mg/kg (lb/million lbs) of titanium produced		
Antimony	0.000	0.000
Cadmium	0.000	0.000
*Chromium	0.000	0.000
Copper	0.000	0.000
*Lead	0.000	0.000
*Nickel	0.000	0.000
Thallium	0.000	0.000
Zinc	0.000	0.000
*Titanium	0.000	0.000

*Regulated Pollutant

TABLE XII-6 (Continued)

PSNS FOR THE PRIMARY AND SECONDARY TITANIUM SUBCATEGORY

(i) Acid Leachate and Rinse Water PSNS

Pollutant or Pollutant Property	Maximum for Any One Day	Maximum for Monthly Average
	mg/kg (lb/million lbs) of titanium produced	
Antimony	22.850	10.180
Cadmium	2.368	0.947
*Chromium	4.381	1.776
Copper	15.160	7.222
*Lead	3.315	1.539
*Nickel	6.512	4.381
Thallium	16.580	7.222
Zinc	12.080	4.973
*Titanium	6.275	2.723

(j) Sponge Crushing and Screening Wet APC PSNS

Pollutant or Pollutant Property	Maximum for Any One Day	Maximum for Monthly Average
	mg/kg (lb/million lbs) of titanium produced	
Antimony	0.000	0.000
Cadmium	0.000	0.000
*Chromium	0.000	0.000
Copper	0.000	0.000
*Lead	0.000	0.000
*Nickel	0.000	0.000
Thallium	0.000	0.000
Zinc	0.000	0.000
*Titanium	0.000	0.000

*Regulated Pollutant

TABLE XII-6 (Continued)

PSNS FOR THE PRIMARY AND SECONDARY TITANIUM SUBCATEGORY

(k) Acid Pickle and Wash Water PSNS

Pollutant or Pollutant Property	Maximum for Any One Day	Maximum for Monthly Average
	mg/kg (lb/million lbs) of titanium pickled	
Antimony	0.118	0.053
Cadmium	0.012	0.005
*Chromium	0.023	0.009
Copper	0.078	0.037
*Lead	0.017	0.008
*Nickel	0.034	0.023
Thallium	0.085	0.037
Zinc	0.062	0.026
*Titanium	0.032	0.014

(l) Scrap Milling Wet Air Pollution Control PSNS

Pollutant or Pollutant Property	Maximum for Any One Day	Maximum for Monthly Average
	mg/kg (lb/million lbs) of scrap milled	
Antimony	0.000	0.000
Cadmium	0.000	0.000
*Chromium	0.000	0.000
Copper	0.000	0.000
*Lead	0.000	0.000
*Nickel	0.000	0.000
Thallium	0.000	0.000
Zinc	0.000	0.000
*Titanium	0.000	0.000

*Regulated Pollutant

TABLE XII-6 (Continued)

PSNS FOR THE PRIMARY AND SECONDARY TITANIUM SUBCATEGORY

(m) Scrap Detergent Wash Water PSNS

Pollutant or Pollutant Property	Maximum for Any One Day	Maximum for Monthly Average
	mg/kg (lb/million lbs) of scrap washed	
Antimony	34.860	15.540
Cadmium	3.613	1.445
*Chromium	6.684	2.710
Copper	23.120	11.020
*Lead	5.058	2.348
*Nickel	9.935	6.684
Thallium	25.290	11.020
Zinc	18.430	7.587
*Titanium	9.574	4.155

(n) Casting Crucible Wash Water PSNS

Pollutant or Pollutant Property	Maximum for Any One Day	Maximum for Monthly Average
	mg/kg (lb/million lbs) of titanium cast	
Antimony	0.921	0.410
Cadmium	0.095	0.038
*Chromium	0.176	0.072
Copper	0.611	0.291
*Lead	0.134	0.062
*Nickel	0.262	0.176
Thallium	0.668	0.291
Zinc	0.487	0.200
*Titanium	0.253	0.110

*Regulated Pollutant

TABLE XII-6 (Continued)

PSNS FOR THE PRIMARY AND SECONDARY TITANIUM SUBCATEGORY

(o) Casting Contact Cooling Water PSNS

Pollutant or Pollutant Property	Maximum for Any One Day	Maximum for Monthly Average
	mg/kg (lb/million lbs) of titanium cast	
Antimony	140.800	62.760
Cadmium	14.590	5.838
*Chromium	27.000	10.950
Copper	93.410	44.510
*Lead	20.430	9.486
*Nickel	40.140	27.000
Thallium	102.200	44.510
Zinc	74.430	30.650
*Titanium	38.680	16.780
*Oil and Grease	729.700	729.700
*TSS	1,095.000	875.700
*pH	Within the range of 7.5 to 10.0 at all times	

*Regulated Pollutant

SECTION XIII

BEST CONVENTIONAL POLLUTANT CONTROL TECHNOLOGY

EPA is not promulgating best conventional pollutant control technology (BCT) for the primary and secondary titanium subcategory at this time.

THIS PAGE INTENTIONALLY LEFT BLANK

NONFERROUS METALS MANUFACTURING POINT SOURCE CATEGORY

DEVELOPMENT DOCUMENT SUPPLEMENT

for the

Primary Zirconium and Hafnium Subcategory

William K. Reilly
Administrator

Rebecca Hanmer
Acting Assistant Administrator for Water

Martha Prothro, Director
Office of Water Regulations and Standards

Thomas P. O'Farrell, Director
Industrial Technology Division

Ernst P. Hall, P.E., Chief
Metals Industry Branch
and
Technical Project Officer

May 1989

U.S. Environmental Protection Agency
Office of Water
Office of Water Regulations and Standards
Industrial Technology Division
Washington, D. C. 20460

PRIMARY ZIRCONIUM AND HAFNIUM SUBCATEGORY

TABLE OF CONTENTS

Section		Page
I	SUMMARY	5051
II	CONCLUSIONS	5055
III	SUBCATEGORY PROFILE	5081
	Description of Primary Zirconium and Hafnium Production	5081
	Raw Materials	5081
	Sand Chlorination	5082
	Separation	5082
	Calcining	5083
	Pure Chlorination	5083
	Reduction	5083
	Purification	5084
	Process Wastewater Sources	5084
	Other Wastewater Sources	5085
	Age, Production, and Process Profile	5085
IV	SUBCATEGORIZATION	5095
	Factors Considered in Subdividing the Primary Zirconium and Hafnium Subcategory	5095
	Other Factors	5097
	Production Normalizing Parameters	5097
V	WATER USE AND WASTEWATER CHARACTERISTICS	5099
	Wastewater Flow Rates	5100
	Wastewater Characteristics Data	5100
	Data Collection Portfolios	5101
	Field Sampling Data	5101
	Wastewater Characteristics and Flows by Subdivision	5102
	Sand Drying Wet Air Pollution Control	5103
	Sand Chlorination Off-Gas Wet Air Pollution Control	5103
	Sand Chlorination Area-Vent Wet Air Pollution Control	5103
	$SiCl_4$ Purification Wet Air Pollution Control	5103
	Feed Makeup Wet Air Pollution Control	5103
	Iron Extraction (MIBK) Steam Stripper Bottoms	5104
	Zirconium Filtrate Hafnium Filtrate	5104
	Calcining Caustic Wet Air Pollution Control	5104
	Pure Chlorination Wet air Pollution Control	5105
	Reduction Area-Vent Wet Air Pollution Control	5105

TABLE OF CONTENTS (Continued)

Section		Page
	Magnesium Recovery Off-Gas Wet Air Pollution Control	5105
	Magnesium Recovery Area Vent Wet Air Pollution Control	5105
	Zirconium Chip Crushing Wet Air Pollution Control	5105
	Acid Leachate from Zirconium Metal Production	5105
	Acid Leachate from Zirconium Alloy Production	5106
	Leaching Rinse Water from Zirconium Metal Production	5106
	Leaching Rinse Water from Zirconium Alloy Production	5106
VI	SELECTION OF POLLUTANT PARAMETERS	5135
	Conventional and Nonconventional Pollutant Parameters	5135
	Conventional and Nonconventional Pollutant Parameters Selected	5136
	Toxic Priority Pollutants	5136
	Toxic Pollutants Never Detected	5135
	Toxic Pollutants Never Found Above Their Analytical Quantification Concentration	5137
	Toxic Pollutants Present Below Concentrations Achievable by Treatment	5137
	Toxic Pollutants Detected in a Small Number of Sources	5138
	Toxic Pollutants Selected for Further Consideration in Establishing Limitations and Standards	5139
VII	CONTROL AND TREATMENT TECHNOLOGIES	5149
	Sand Drying Wet Air Pollution Control	5149
	Sand Chlorination Off-Gas Wet Air Pollution Control	5149
	Sand Chlorination Area Vent Wet Air Pollution Control	5150
	$SiCl_4$ Purification Wet Air Pollution Control	5150
	Feed Makeup Wet Air Pollution Control	5150
	Iron Extraction (MIBK) Steam Stripper Bottoms	5150
	Zirconium Filtrate	5150
	Hafnium Filtrate	5150
	Calcining Caustic Wet Air Pollution Control	5150
	Pure Chlorination Wet Air Pollution Control	5151
	Reduction Area Vent Wet Air Pollution Control	5151

TABLE OF CONTENTS (Continued)

Section		Page
	Magnesium Recovery Off-Gas Wet Air Pollution Control	5151
	Magnesium Recovery Area Vent Wet Air Pollution Control	5151
	Zirconium Chip Crushing Wet Air Pollution Control	5151
	Acid Leachate from Zirconium Metal or From Zirconium Alloy Production	5151
	Leaching Rinse Water from Zirconium Metal or Zirconium Alloy Production	5152
	Control and Treatment Options	5152
	Option A	5152
	Option C	5152
VIII	COSTS, ENERGY, AND NONWATER QUALITY ASPECTS	5153
	Treatment Options for Existing Sources	5153
	Option A	5153
	Option C	5153
	Cost Methodology	5153
	Energy Requirements	5154
	Solid Waste	5154
	Air Pollution	5155
IX	BEST PRACTICABLE CONTROL TECHNOLOGY CURRENTLY AVAILABLE	5157
	Technical Approach to BPT	5157
	Industry Cost and Pollutant Reduction Benefits	5157
	BPT Option Selection	5159
	Wastewater Discharge Rates	5159
	Sand Drying Wet Air Pollution Control	5160
	Sand Chlorination Off-Gas Wet Air Pollution Control	5161
	Sand Chlorination Area Vent Wet Air Pollution Control	5161
	$SiCl_4$ Purification Wet Air Pollution Control	5162
	Feed Makeup Wet Air Pollution Control	5162
	Iron Extraction (MIBK) Steam Stripper Bottoms	5162
	Zirconium Filtrate	5163
	Hafnium Filtrate	5163
	Calcining Caustic Wet Air Pollution Control	5163
	Pure Chlorination Wet Air Pollution Control	5164
	Reduction Area Vent Wet Air Pollution Control	5164
	Magnesium Recovery Wet Air Pollution Control	5164

TABLE OF CONTENTS (Continued)

Section		Page
	Magnesium Recovery Area Vent Wet Air Pollution Control	5165
	Zirconium Chip Crushing Wet Air Pollution Control	5166
	Acid Leachate from Zirconium Metal Production	5166
	Acid Leachate from Zirconium Alloy Production	5166
	Leaching Rinse Water from Zirconium Metal Production	5166
	Leaching Rinse Water from Zirconium Alloy Production	5166
	Regulated Pollutant Parameters	5166
	Effluent Limitations	5167
X	BEST AVAILABLE TECHNOLOGY ECONOMICALLY ACHIEVABLE	5179
	Technical Approach to BAT	5179
	Option A	5180
	Option C	5180
	Industry Cost and Pollutant Removal Estimated	5180
	Pollutant Removal Estimates	5181
	Compliance Costs	5181
	BAT Option Selection - Proposal	5182
	BAT Option Selection - Promulgation	5182
	Wastewater Discharge Rates	5183
	Regulated Pollutant Parameters	5183
	Effluent Limitations	5183
XI	NEW SOURCE PERFORMANCE STANDARDS	5201
	Technical Approach to NSPS	5201
	NSPS Option Selection - Proposal	5202
	NSPS Option Selection - Promulgation	5202
	Regulated Pollutant Parameters	5202
	New Source Performance Standards	5202
XII	PRETREATMENT STANDARDS	5215
	Technical Approach to Pretreatment	5215
	Pretreatment Standards for Existing and New Sources	5216
	PSES and PSNS Option Selection - Proposal	5217
	PSES and PSNS Option Selection - Promulgation	5217
	Regulated Pollutant Parameters	5217
	Pretreatment Standards	5217
XIII	BEST CONVENTIONAL POLLUTANT CONTROL TECHNOLOGY	5129

LIST OF TABLES

Table	Title	Page
III-1	Initial Operating Year (Range) Summary of Plants in the Primary Zirconium and Hafnium Subcategory by Discharge Type	5086
III-2	Production Ranges for the Primary Zirconium and Hafnium Subcategory	5087
III-3	Summary of Primary Zirconium and Hafnium Subcategory Processes and Associated Waste Streams	5088
V-1	Water Use and Discharge Rates for Sand Drying Wet Air Pollution Control	5107
V-2	Water Use and Discharge Rates for Sand Chlorination Off-Gas Wet Air Pollution Control	5107
V-3	Water Use and Discharge Rates for Sand Chlorination Area-Vent Wet Air Pollution Control	5108
V-4	Water Use and Discharge Rates for $SiCl_4$ Purification Wet Air Pollution Control	5108
V-5	Water Use and Discharge Rates for Feed Makeup Wet Air Pollution Control	5109
V-6	Water Use and Discharge Rates for Iron Extraction (MIBK) Steam Stripper Bottoms	5110
V-7	Water Use and Discharge Rates for Zirconium Filtrate	5110
V-8	Water Use and Discharge Rates for Hafnium Filtrate	5111
V-9	Water Use and Discharge Rates for Calcining Caustic Wet Air Pollution Control	5112
V-10	Water Use and Discharge Rates for Pure Chlorination Wet Air Pollution Control	5113
V-11	Water Use and Discharge Rates for Reduction Area-Vent Wet Air Pollution Control	5114
V-12	Water Use and Discharge Rates for Magnesium Recovery Off-Gas Wet Air Pollution Control	5114
V-13	Water Use and Discharge Rates for Magnesium Recovery Area-Vent Wet Air Pollution Control	5115

LIST OF TABLES (Continued)

Table	Title	Page
V-14	Water Use and Discharge Rates for Zirconium Chip Crushing Wet Air Pollution Control	5115
V-15	Water Use and Discharge Rates for Acid Leachate from Zirconium Metal Production	5116
V-16	Water Use and Discharge Rates for Acid Leachate from Zirconium Alloy Production	5117
V-17	Water Use and Discharge Rates for Leaching Rinse Waste from Zirconium Metal Production	5118
V-18	Water Use and Discharge Rates for Leaching Rinse Waste from Zirconium Alloy Production	5119
V-19	Primary Zirconium and Hafnium Sampling Data $SiCl_4$ Purification Wet Air Pollution Control Raw Wastewater	5120
V-20	Primary Zirconium and Hafnium Sampling Data Feed Makeup Wet Air Pollution Control Raw Wastewater	5120
V-21	Primary Zirconium and Hafnium Sampling Data Iron Extraction (MIBK) Steam Stripper Bottoms Raw Wastewater	5120
V-22	Primary Zirconium and Hafnium Sampling Data Zirconium Filtrate Raw Wastewater	5120
V-23	Primary Zirconium and Hafnium Sampling Data Hafnium Filtrate Raw Wastewater	5120
V-24	Primary Zirconium and Hafnium Sampling Data Calcining Caustic Wet Air Pollution Control Raw Wastewater	5121
V-25	Primary Zirconium and Hafnium Sampling Data Magnesium Recovery Wet Air Pollution Control Raw Wastewater	5121
V-26	Primary Zirconium and Hafnium Sampling Data Acid Leachate Waste Raw Wastewater	5121
V-27	Primary Zirconium and Hafnium Sampling Data Leaching Rinse Waste Raw Wastewater	5121
V-28	Primary Zirconium and Hafnium Sampling Data Treated Effluent	5122

LIST OF TABLES (Continued)

Table	Title	Page
VI-1	Frequency of Occurrence of Priority Pollutants Primary Zirconium and Hafnium Subcategory Raw Wastewater	5141
VI-2	Toxic Pollutants Never Detected	5145
VIII-1	Cost of Compliance for the Zirconium and Hafnium Subcategory Direct Dischargers	5156
IX-1	BPT Wastewater Discharge Rates for the Primary Zirconium and Hafnium Subcategory	5167
IX-2	BPT Mass Limitations for the Primary Zirconium and Hafnium Subcategory	5169
X-1	Current Recycle Practices Within the Primary Zirconium and Hafnium Subcategory	5185
X-2	Pollutant Benefit Estimates for Direct Dischargers in the Primary Zirconium and Hafnium Subcategory	5186
X-3	Cost of Compliance for the Primary Zirconium and Hafnium Subcategory Direct Dischargers	5187
X-4	BAT Wastewater Discharge Rates for the Primary Zirconium and Hafnium Subcategory	5188
X-5	BAT Mass Limitations for the Primary Zirconium and Hafnium Subcategory	5190
XI-1	NSPS Wastewater Discharge Rates for the Primary Zirconium and Hafnium Subcategory	5203
XI-2	NSPS for the Primary Zirconium and Hafnium Subcategory	5205
XII-1	PSNS Wastewater Discharge Rates for the Primary Zirconium and Hafnium Subcategory	5218
XII-2	PSNS for the Primary Zirconium and Hafnium Subcategory	5220

LIST OF FIGURES

Figure	Title	Page
III-1	Primary Zirconium and Hafnium Production Processes	5090
III-2	Primary Zirconium and Hafnium Production Processes	5092
III-3	Geographic Locations of the Primary Zirconium and Hafnium Subcategory Plants	5093
IX-1	BPT Treatment Scheme	5178
X-1	BAT Treatment Scheme for Option A	5199
X-2	BAT Treatment Scheme for Option B	5200

SECTION I

SUMMARY

This document provides the technical basis for promulgating effluent limitations based on best practicable technology (BPT) and best available technology economically achievable (BAT) for existing direct dischargers, pretreatment standards for new indirect dischargers (PSNS), and standards of performance for new source direct dischargers (NSPS).

The primary zirconium and hafnium subcategory consists of 3 plants. Of the 3 plants, one discharges directly to rivers, lakes, or streams, one discharges to publicly owned treatment works (POTW), and one achieves zero discharge of process wastewater.

EPA first studied the primary zirconium and hafnium subcategory to determine whether differences in raw materials, final products, manufacturing processes, equipment, age and size of plants, and water usage required the development of separate effluent limitations and standards for different segments of the subcategory. This involved a detailed analysis of wastewater discharge and treated effluent characteristics, including the sources and volume of water used, the processes used, the sources of pollutants and wastewaters in the plant, and the constituents of wastewaters, including priority pollutants. As a result, eighteen subdivisions or building blocks have been identified for this subcategory that warrant separate effluent limitations. These include:

- Sand drying wet air pollution control,
- Sand chlorination off-gas wet air pollution control,
- Sand chlorination area vent wet air pollution control,
- $SiCl_4$ purification wet air pollution control,
- Feed makeup wet air pollution control,
- Iron extraction (MIBK) steam stripper bottoms,
- Zirconium filtrate,
- Hafnium filtrate,
- Calcining caustic wet air pollution control,
- Pure chlorination wet air pollution control,
- Reduction area vent wet air pollution control,
- Magnesium recovery off-gas wet air pollution control,
- Magnesium recovery area vent wet air pollution control
- Zirconium chip crushing wet air pollution control,
- Acid leachate from zirconium metal production,
- Acid leachate from zirconium alloy production,
- Leaching rinse water from zirconium metal production, and
- Leaching rinse water from zirconium alloy production

EPA also identified several distinct control and treatment technologies (both in-plant and end-of-pipe) applicable to the

primary zirconium and hafnium subcategory. The Agency analyzed both historical and newly generated data on the performance of these technologies, including their nonwater quality environmental impacts and air quality, solid waste generation, and energy requirements. EPA also studied various flow reduction techniques reported in the data collection portfolios (dcp) and plant visits.

Engineering costs were prepared for each plant for each of the control and treatment options considered for the subcategory. These costs were then used by the Agency to estimate the impact of implementing the various options in the subcategory. For each control and treatment option that the Agency found to be most effective and technically feasible in controlling the discharge of pollutants, we estimated the number of potential closures, number of employees affected, and impact on price. These results are reported in a separate document entitled "The Economic Impact Analysis of Effluent Limitations Guidelines and Standards for the Nonferrous Metals Manufacturing Industry."

After examining the various treatment technologies being operated in the subcategory, the Agency has identified BPT to represent the average of the best existing technology. Metals removal based on chemical precipitation and sedimentation technology is the basis for the BPT limitations. Steam stripping was selected as the technology basis for ammonia limitations. Cyanide precipitation was selected as the technology basis for cyanide limitations.

EPA is promulgating BAT limitations based on cyanide precipitation, ammonia steam stripping, and chemical precipitation and sedimentation (BPT technology), plus filtration.

EPA is not promulgating BPT or BAT limitations for plants which only produce zirconium or zirconium-nickel alloys by magnesium reduction of ZrO_2, because little pollutant removal is expected with treatment of the wastewater associated with these operations.

NSPS is equivalent to BAT. In selecting NSPS, EPA recognizes that new plants have the opportunity to implement the best and most efficient manufacturing processes and treatment technology. However, no such processes or treatment technology were considered to meet the NSPS criteria. Therefore, the technology basis of BAT has been determined as the best demonstrated technology.

PSES is not being promulgated at this time because the one indirect discharging facility in this subcategory only has operations which result in relatively clean wastewater. Because little pollutant removal could be expected with treatment, EPA is not promulgating limits for these operations.

For PSNS, the Agency selected end-of-pipe treatment and in-

process flow reduction control techniques equivalent to NSPS.

BCT limitations for this subcategory are not being promulgated at this time.

The mass limitations and standards for BPT, BAT, NSPS, PSES and PSNS are presented in Section II.

THIS PAGE INTENTIONALLY LEFT BLANK

SECTION II

CONCLUSIONS

EPA has divided the primary zirconium and hafnium subcategory into eighteen subdivisions for the purpose of effluent limitations and standards. These subdivisions are:

(a) Sand drying wet air pollution control,
(b) Sand chlorination off-gas wet air pollution control,
(c) Sand chlorination area vent wet air pollution control,
(d) $SiCl_4$ purification wet air pollution control,
(e) Feed makeup wet air pollution control,
(f) Iron extraction (MIBK) steam stripper bottoms,
(g) Zirconium filtrate,
(h) Hafnium filtrate,
(i) Calcining caustic wet air pollution control,
(j) Pure chlorination wet air pollution control,
(k) Reduction area vent wet air pollution control,
(l) Magnesium recovery off-gas wet air pollution control,
(m) Magnesium recovery area vent wet air pollution control,
(n) Zirconium chip crushing wet air pollution control,
(o) Acid leachate from zirconium metal production,
(p) Acid leachate from zirconium alloy production,
(q) Leaching rinse water from zirconium metal production, and
(r) Leaching rinse water from zirconium alloy production.

BPT is promulgated based on the performance achievable by the application of ammonia steam stripping, cyanide precipitation, and chemical precipitation and sedimentation technology. EPA is not promulgating BPT limitations for those plants which only produce zirconium or zirconium. nickel alloys by magnesium reduction of ZrO_2. The following effluent limitations are promulgated:

(a) Sand Drying Wet Air Pollution Control BPT

Pollutant or Pollutant Property	Maximum For Any One Day	Maximum for Monthly Average
mg/kg (lb/million lbs) of zirconium dioxide and hafnium dioxide produced		
Chromium (Total)	0.250	0.102
Cyanide (Total)	0.165	0.068
Lead	0.239	0.114
Nickel	1.091	0.721
Ammonia (as N)	75.710	33.280
TSS	23.290	11.080
pH	Within the range of 7.5 to 10.0 at all times	

(b) Sand Chlorination Off-Gas Wet Air Pollution Control BPT

Pollutant or Pollutant Property	Maximum For Any One Day	Maximum for Monthly Average
mg/kg (lb/million lbs) of zirconium dioxide and hafnium dioxide produced		
Chromium (Total)	19.130	7.825
Cyanide (Total)	12.610	5.216
Lead	18.260	8.694
Nickel	83.460	55.210
Ammonia (as N)	5,795.000	2,547.000
TSS	1,782.000	847.700
pH	Within the range of 7.5 to 10.0 at all times	

(c) Sand Chlorination Area Vent Wet Air Pollution Control BPT

Pollutant or Pollutant Property	Maximum For Any One Day	Maximum for Monthly Average
mg/kg (lb/million lbs) of zirconium dioxide and hafnium dioxide produced		
Chromium (Total)	3.751	1.534
Cyanide (Total)	2.472	1.023
Lead	3.580	1.705
Nickel	16.370	10.830
Ammonia (as N)	1,136.000	499.500
TSS	349.500	166.200
pH	Within the range of 7.5 to 10.0 at all times	

(d) $SiCl_4$ Purification Wet Air Pollution Control BPT

Pollutant or Pollutant Property	Maximum For Any One Day	Maximum for Monthly Average
mg/kg (lb/million lbs) of zirconium dioxide and hafnium dioxide produced		
Chromium (Total)	3.299	1.350
Cyanide (Total)	2.174	0.900
Lead	3.149	1.500
Nickel	14.400	9.522
Ammonia (as N)	999.500	439.400
TSS	307.400	146.200
pH	Within the range of 7.5 to 10.0 at all times	

(e) Feed Makeup Wet Air Pollution Control BPT

Pollutant or Pollutant Property	Maximum For Any One Day	Maximum for Monthly Average
mg/kg (lb/million lbs) of zirconium dioxide and hafnium dioxide produced		
Chromium (Total)	2.501	1.023
Cyanide (Total)	1.648	0.682
Lead	2.387	1.137
Nickel	10.910	7.217
Ammonia (as N)	757.500	333.000
TSS	233.000	110.800
pH	Within the range of 7.5 to 10.0 at all times	

(f) Iron Extraction (MIBK) Steam Stripper Bottoms BPT

Pollutant or Pollutant Property	Maximum For Any One Day	Maximum for Monthly Average
mg/kg (lb/million lbs) of zirconium dioxide and hafnium dioxide produced		
Chromium (Total)	0.987	0.404
Cyanide (Total)	0.651	0.269
Lead	0.942	0.449
Nickel	4.308	2.850
Ammonia (as N)	299.100	131.500
TSS	92.000	43.760
pH	Within the range of 7.5 to 10.0 at all times	

(g) Zirconium Filtrate BPT

Pollutant or Pollutant Property	Maximum For Any One Day	Maximum for Monthly Average
mg/kg (lb/million lbs) of zirconium dioxide and hafnium dioxide produced		
Chromium (Total)	17.070	6.982
Cyanide (Total)	11.250	4.655
Lead	16.290	7.758
Nickel	74.480	49.260
Ammonia (as N)	5,171.000	2,273.000
TSS	1,596.000	756.400
pH	Within the range of 7.5 to 10.0 at all times	

(h) Hafnium Filtrate BPT

Pollutant or Pollutant Property	Maximum For Any One Day	Maximum for Monthly Average
mg/kg (lb/million lbs) of zirconium dioxide and hafnium dioxide produced		
Chromium (Total)	0.000	0.000
Cyanide (Total)	0.000	0.000
Lead	0.000	0.000
Nickel	0.000	0.000
Ammonia (as N)	0.000	0.000
TSS	0.000	0.000
pH	Within the range of 7.5 to 10.0 at all times	

(i) Calcining Caustic Wet Air Pollution Control BPT

Pollutant or Pollutant Property	Maximum For Any One Day	Maximum for Monthly Average
mg/kg (lb/million lbs) of zirconium dioxide and hafnium dioxide produced		
Chromium (Total)	3.959	1.619
Cyanide (Total)	2.609	1.080
Lead	3.779	1.799
Nickel	17.270	11.430
Ammonia (as N)	1,199.000	527.200
TSS	368.900	175.400
pH	Within the range of 7.5 to 10.0 at all times	

(j) Pure Chlorination Wet Air Pollution Control BPT

Pollutant or Pollutant Property	Maximum For Any One Day	Maximum for Monthly Average
mg/kg (lb/million lbs) of zirconium and hafnium produced		
Chromium (Total)	16.860	6.897
Cyanide (Total)	11.110	4.598
Lead	16.090	7.663
Nickel	73.570	48.660
Ammonia (as N)	5,108.000	2,245.000
TSS	1,571.000	747.200
pH	Within the range of 7.5 to 10.0 at all times	

(k) Reduction Area-Vent Wet Air Pollution Control BPT

Pollutant or Pollutant Property	Maximum For Any One Day	Maximum for Monthly Average
mg/kg (lb/million lbs) of zirconium and hafnium produced		
Chromium (Total)	1.622	0.663
Cyanide (Total)	1.069	0.442
Lead	1.548	0.737
Nickel	7.077	4.681
Ammonia (as N)	491.300	216.000
TSS	151.100	71.880
pH	Within the range of 7.5 to 10.0 at all times	

(l) Magnesium Recovery Off-Gas Wet Air Pollution Control BPT

Pollutant or Pollutant Property	Maximum For Any One Day	Maximum for Monthly Average
mg/kg (lb/million lbs) of zirconium and hafnium produced		
Chromium (Total)	9.123	3.732
Cyanide (Total)	6.013	2.488
Lead	8.708	4.147
Nickel	39.810	26.330
Ammonia (as N)	2,764.000	1,215.000
TSS	850.100	404.300
pH	Within the range of 7.5 to 10.0 at all times	

(m) Magnesium Recovery Area Vent Wet Air Pollution Control BPT

Pollutant or Pollutant Property	Maximum For Any One Day	Maximum for Monthly Average
mg/kg (lb/million lbs) of zirconium and hafnium produced		
Chromium (Total)	5.068	2.073
Cyanide (Total)	3.340	1.382
Lead	4.838	2.304
Nickel	22.110	14.630
Ammonia (as N)	1,535.000	675.000
TSS	472.200	224.600
pH	Within the range of 7.5 to 10.0 at all times	

(n) Zirconium Chip Crushing Wet Air Pollution Control BPT

Pollutant or Pollutant Property	Maximum For Any One Day	Maximum for Monthly Average
mg/kg (lb/million lbs) of zirconium and hafnium produced		
Chromium (Total)	0.000	0.000
Cyanide (Total)	0.000	0.000
Lead	0.000	0.000
Nickel	0.000	0.000
Ammonia (as N)	0.000	0.000
TSS	0.000	0.000
pH	Within the range of 7.5 to 10.0 at all times	

(o) Acid Leachate from Zirconium Metal Production BPT

Pollutant or Pollutant Property	Maximum For Any One Day	Maximum for Monthly Average
mg/kg (lb/million lbs) of pure zirconium produced		
Chromium (Total)	12.970	5.304
Cyanide (Total)	8.545	3.536
Lead	12.380	5.893
Nickel	56.570	37.420
Ammonia (as N)	3,928.000	1,727.000
TSS	1,208.000	574.600
pH	Within the range of 7.5 to 10.0 at all times	

(p) Acid Leachate from Zirconium Alloy Production BPT

Pollutant or Pollutant Property	Maximum For Any One Day	Maximum for Monthly Average
mg/kg (lb/million lbs) of zirconium contained in alloys produced		
Chromium (Total)	6.939	2.839
Cyanide (Total)	4.574	1.893
Lead	6.624	3.154
Nickel	30.280	20.030
Ammonia (as N)	2,102.000	924.200
TSS	646.600	307.600
pH	Within the range of 7.5 to 10.0 at all times	

(q) Leaching Rinse Water from Zirconium Metal Production BPT

Pollutant or Pollutant Property	Maximum For Any One Day	Maximum for Monthly Average
mg/kg (lb/million lbs) of pure zirconium produced		
Chromium (Total)	25.930	10.610
Cyanide (Total)	17.090	7.072
Lead	24.750	11.790
Nickel	113.200	74.840
Ammonia (as N)	7,856.000	3,453.000
TSS	2,416.000	1,149.000
pH	Within the range of 7.5 to 10.0 at all times	

(r) Leaching Rinse Water from Zirconium Alloy Production BPT

Pollutant or Pollutant Property	Maximum For Any One Day	Maximum for Monthly Average
mg/kg (lb/million lbs) of zirconium contained in alloys produced		
Chromium (Total)	0.347	0.142
Cyanide (Total)	0.229	0.095
Lead	0.331	0.158
Nickel	1.515	1.002
Ammonia (as N)	105.200	46.240
TSS	32.350	15.390
pH	Within the range of 7.5 to 10.0 at all times	

EPA is not promulgating BAT limitations for primary zirconium and hafnium plants which only produce zirconium or zirconium-nickel alloys by magnesium reduction of ZrO_2. BAT limitations are promulgated for all other primary zirconium and hafnium plants based on cyanide precipitation, ammonia steam stripping, and chemical precipitation and sedimentation (BPT technology), and multimedia filtration. The following BAT limitations are promulgated:

(a) Sand Drying Wet Air Pollution Control BAT

Pollutant or Pollutant Property	Maximum For Any One Day	Maximum for Monthly Average
mg/kg (lb/million lbs) of zirconium dioxide and hafnium dioxide produced		
Chromium (Total)	0.210	0.085
Cyanide (Total)	0.114	0.045
Lead	0.159	0.074
Nickel	0.312	0.210
Ammonia (as N)	75.710	33.280

(b) Sand Chlorination Off-Gas Wet Air Pollution Control BAT

Pollutant or Pollutant Property	Maximum For Any One Day	Maximum for Monthly Average
mg/kg (lb/million lbs) of zirconium dioxide and hafnium dioxide produced		
Chromium (Total)	16.080	6.521
Cyanide (Total)	8.694	3.478
Lead	12.170	5.651
Nickel	23.910	16.080
Ammonia (as N)	5,795.000	2,547.000

(c) Sand Chlorination Area Vent Wet Air Pollution Control BAT

Pollutant or Pollutant Property	Maximum For Any One Day	Maximum for Monthly Average
mg/kg (lb/million lbs) of zirconium dioxide and hafnium dioxide produced		
Chromium (Total)	3.154	1.279
Cyanide (Total)	1.705	0.682
Lead	2.387	1.108
Nickel	4.688	3.154
Ammonia (as N)	1,136.000	499.500

(d) $SiCl_4$ Purification Wet Air Pollution Control BAT

Pollutant or Pollutant Property	Maximum For Any One Day	Maximum for Monthly Average
mg/kg (lb/million lbs) of zirconium dioxide and hafnium dioxide produced		
Chromium (Total)	2.774	1.125
Cyanide (Total)	1.500	0.600
Lead	2.099	0.975
Nickel	4.124	2.774
Ammonia (as N)	999.500	439.400

(e) Feed Makeup Wet Air Pollution Control BAT

Pollutant or Pollutant Property	Maximum For Any One Day	Maximum for Monthly Average
mg/kg (lb/million lbs) of zirconium dioxide and hafnium dioxide produced		
Chromium (Total)	2.103	0.852
Cyanide (Total)	1.137	0.455
Lead	1.591	0.739
Nickel	3.126	2.103
Ammonia (as N)	757.500	333.000

(f) Iron Extraction (MIBK) Steam Stripper Bottoms BAT

Pollutant or Pollutant Property	Maximum For Any One Day	Maximum for Monthly Average
mg/kg (lb/million lbs) of zirconium dioxide and hafnium dioxide produced		
Chromium (Total)	0.830	0.337
Cyanide (Total)	0.449	0.180
Lead	0.628	0.292
Nickel	1.234	0.830
Ammonia (as N)	299.100	131.500

(g) Zirconium Filtrate BAT

Pollutant or Pollutant Property	Maximum For Any One Day	Maximum for Monthly Average
mg/kg (lb/million lbs) of zirconium dioxide and hafnium dioxide produced		
Chromium (Total)	14.350	5.819
Cyanide (Total)	7.758	3.104
Lead	10.860	5.043
Nickel	21.330	14.350
Ammonia (as N)	5,171.000	2,273.000

(h) Hafnium Filtrate BAT

Pollutant or Pollutant Property	Maximum For Any One Day	Maximum for Monthly Average
mg/kg (lb/million lbs) of zirconium dioxide and hafnium dioxide produced		
Chromium (Total)	0.000	0.000
Cyanide (Total)	0.000	0.000
Lead	0.000	0.000
Nickel	0.000	0.000
Ammonia (as N)	0.000	0.000

(i) Calcining Caustic Wet Air Pollution Control BAT

Pollutant or Pollutant Property	Maximum For Any One Day	Maximum for Monthly Average
mg/kg (lb/million lbs) of zirconium dioxide and hafnium dioxide produced		
Chromium (Total)	3.329	1.350
Cyanide (Total)	1.799	0.720
Lead	2.519	1.170
Nickel	4.948	3.329
Ammonia (as N)	1,199.000	527.200

(j) Pure Chlorination Wet Air Pollution Control BAT

Pollutant or Pollutant Property	Maximum For Any One Day	Maximum for Monthly Average
mg/kg (lb/million lbs) of zirconium and hafnium produced		
Chromium (Total)	14.180	5.748
Cyanide (Total)	7.663	3.065
Lead	10.730	4.981
Nickel	21.070	14.180
Ammonia (as N)	5,108.000	2,245.000

(k) Reduction Area Vent Wet Air Pollution Control BAT

Pollutant or Pollutant Property	Maximum For Any One Day	Maximum for Monthly Average
mg/kg (lb/million lbs) of zirconium and hafnium produced		
Chromium (Total)	1.364	0.553
Cyanide (Total)	0.737	0.295
Lead	1.032	0.479
Nickel	2.027	1.364
Ammonia (as N)	491.300	216.000

(l) Magnesium Recovery Off-Gas Wet Air Pollution Control BAT

Pollutant or Pollutant Property	Maximum For Any One Day	Maximum for Monthly Average
mg/kg (lb/million lbs) of zirconium and hafnium produced		
Chromium (Total)	7.671	3.110
Cyanide (Total)	4.147	1.659
Lead	5.805	2.695
Nickel	11.400	7.671
Ammonia (as N)	2,764.000	1,215.000

BAT MASS LIMITATIONS FOR THE PRIMARY ZIRCONIUM AND HAFNIUM SUBCATEGORY

(m) Magnesium Recovery Area Vent Wet Air Pollution Control

Pollutant or Pollutant Property	Maximum For Any One Day	Maximum for Monthly Average
mg/kg (lb/million lbs) of zirconium and hafnium produced		
Chromium (Total)	4.262	1.728
Cyanide (Total)	2.304	0.921
Lead	3.225	1.497
Nickel	6.335	4.262
Ammonia (as N)	1,535.000	675.000

(n) Zirconium Chip Crushing Wet Air Pollution Control BAT

Pollutant or Pollutant Property	Maximum For Any One Day	Maximum for Monthly Average
mg/kg (lb/million lbs) of zirconium and hafnium produced		
Chromium (Total)	0.000	0.000
Cyanide (Total)	0.000	0.000
Lead	0.000	0.000
Nickel	0.000	0.000
Ammonia (as N)	0.000	0.000

(o) Acid Leachate from Zirconium Metal Production BAT

Pollutant or Pollutant Property	Maximum For Any One Day	Maximum for Monthly Average
mg/kg (lb/million lbs) of pure zirconium produced		
Chromium (Total	10.900	4.420
Cyanide (Total)	5.893	2.357
Lead	8.250	3.831
Nickel	16.210	10.900
Ammonia (as N)	3,928.000	1,674.000

(p) Acid Leachate from Zirconium Alloy Production BAT

Pollutant or Pollutant Property	Maximum For Any One Day	Maximum for Monthly Average
mg/kg (lb/million lbs) of zirconium contained in alloys produced		
Chromium (Total)	5.835	2.366
Cyanide (Total)	3.154	1.262
Lead	4.416	2.050
Nickel	8.674	5.835
Ammonia (as N)	2,102.000	895.000

(q) Leaching Rinse Water from Zirconium Metal Production BAT

Pollutant or Pollutant Property	Maximum For Any One Day	Maximum for Monthly Average
mg/kg (lb/million lbs) of pure zirconium produced		
Chromium (Total)	21.810	8.840
Cyanide (Total)	11.790	4.715
Lead	16.500	7.661
Nickel	32.410	21.810
Ammonia (as N)	7,856.000	3,453.000

(r) Leaching Rinse Water from Zirconium Alloy Production BAT

Pollutant or Pollutant Property	Maximum For Any One Day	Maximum for Monthly Average
mg/kg (lb/million lbs) of zirconium contained in alloys produced		
Chromium (Total)	0.292	0.118
Cyanide (Total)	0.158	0.063
Lead	0.221	0.103
Nickel	0.434	0.292
Ammonia (as N)	105.200	46.240

EPA is not promulgating new source performance standards for primary zirconium and hafnium plants which only produce zirconium or zirconium-nickel alloys by magnesium reduction of ZrO_2. New source performance standards are promulgated for all other primary zirconium and hafnium plants based on cyanide precipitation, ammonia steam stripping, and chemical precipitation and sedimentation (lime and settle technology), plus multimedia filtration. The following new source performance standards are promulgated:

(a) Sand Drying Wet Air Pollution Control NSPS

Pollutant or Pollutant Property	Maximum For Any One Day	Maximum for Monthly Average
mg/kg (lb/million lbs) of zirconium dioxide and hafnium dioxide produced		
Chromium (Total)	0.210	0.085
Cyanide (Total)	0.114	0.045
Lead	0.159	0.074
Nickel	0.312	0.210
Ammonia (as N)	75.710	33.280
TSS	8.520	6.816
pH	Within the range of 7.5 to 10.0 at all times	

(b) Sand Chlorination Off-Gas Wet Air Pollution Control NSPS

Pollutant or Pollutant Property	Maximum For Any One Day	Maximum for Monthly Average
mg/kg (lb/million lbs) of zirconium dioxide and hafnium dioxide produced		
Chromium (Total)	16.080	6.521
Cyanide (Total)	8.694	3.478
Lead	12.170	5.651
Nickel	23.910	16.080
Ammonia (as N)	5,795.000	2,547.000
TSS	652.100	521.000
pH	Within the range of 7.5 to 10.0 at all times	

(c) Sand Chlorination Area Vent Wet Air Pollution Control NSPS

Pollutant or Pollutant Property	Maximum For Any One Day	Maximum for Monthly Average
mg/kg (lb/million lbs) of zirconium dioxide and hafnium dioxide produced		
Chromium (Total)	3.154	1.279
Cyanide (Total)	1.705	0.682
Lead	2.387	1.108
Nickel	4.688	3.154
Ammonia (as N)	1,136.000	499.500
TSS	127.900	102.300
pH	Within the range of 7.5 to 10.0 at all times	

(d) $SiCl_4$ Purification Wet Air Pollution Control NSPS

Pollutant or Pollutant Property	Maximum For Any One Day	Maximum for Monthly Average
mg/kg (lb/million lbs) of zirconium dioxide and hafnium dioxide produced		
Chromium (Total)	2.774	1.125
Cyanide (Total)	1.500	0.600
Lead	2.099	0.975
Nickel	4.124	2.774
Ammonia (as N)	999.500	439.400
TSS	112.500	89.980
pH	Within the range of 7.5 to 10.0 at all times	

(e) Feed Makeup Wet Air Pollution Control NSPS

Pollutant or Pollutant Property	Maximum For Any One Day	Maximum for Monthly Average
mg/kg (lb/million lbs) of zirconium dioxide and hafnium dioxide produced		
Chromium (Total)	2.103	0.852
Cyanide (Total)	1.137	0.455
Lead	1.591	0.739
Nickel	3.126	2.103
Ammonia (as N)	757.500	333.000
TSS	85.250	68.200
pH	Within the range of 7.5 to 10.0 at all times	

(f) Iron Extraction (MIBK) Steam Stripper Bottoms NSPS

Pollutant or Pollutant Property	Maximum For Any One Day	Maximum for Monthly Average
mg/kg (lb/million lbs) of zirconium dioxide and hafnium dioxide produced		
Chromium (Total)	0.830	0.337
Cyanide (Total)	0.449	0.180
Lead	0.628	0.292
Nickel	1.234	0.830
Ammonia (as N)	299.100	131.500
TSS	33.660	26.930
pH	Within the range of 7.5 to 10.0 at all times	

(g) Zirconium Filtrate NSPS

Pollutant or Pollutant Property	Maximum For Any One Day	Maximum for Monthly Average
mg/kg (lb/million lbs) of zirconium dioxide and hafnium dioxide produced		
Chromium (Total)	14.350	5.819
Cyanide (Total)	7.758	3.103
Lead	10.860	5.043
Nickel	21.330	14.350
Ammonia (as N)	5,171.000	2,273.000
TSS	581.900	465.500
pH	Within the range of 7.5 to 10.0 at all times	

(h) Hafnium Filtrate NSPS

Pollutant or Pollutant Property	Maximum For Any One Day	Maximum for Monthly Average
mg/kg (lb/million lbs) of zirconium dioxide and hafnium dioxide produced		
Chromium (Total)	0.000	0.000
Cyanide (Total)	0.000	0.000
Lead	0.000	0.000
Nickel	0.000	0.000
Ammonia (as N)	0.000	0.000
TSS	0.000	0.000
pH	Within the range of 7.5 to 10.0 at all times	

(i) Calcining Caustic Wet Air Pollution Control NSPS

Pollutant or Pollutant Property	Maximum For Any One Day	Maximum for Monthly Average
mg/kg (lb/million lbs) of zirconium dioxide and hafnium dioxide produced		
Chromium (Total)	3.329	1.350
Cyanide (Total)	1.799	0.720
Lead	2.519	1.170
Nickel	4.948	3.329
Ammonia (as N)	1,199.000	527.200
TSS	135.000	108.000
pH	Within the range of 7.5 to 10.0 at all times	

(j) Pure Chlorination Wet Air Pollution Control NSPS

Pollutant or Pollutant Property	Maximum For Any One Day	Maximum for Monthly Average
mg/kg (lb/million lbs) of zirconium and hafnium produced		
Chromium (Total)	14.180	5.748
Cyanide (Total)	7.663	3.065
Lead	10.730	4.981
Nickel	21.070	14.180
Ammonia (as N)	5,108.000	2,245.000
TSS	574.800	459.800
pH	Within the range of 7.5 to 10.0 at all times	

(k) Reduction Area Vent Wet Air Pollution Control NSPS

Pollutant or Pollutant Property	Maximum For Any One Day	Maximum for Monthly Average
mg/kg (lb/million lbs) of zirconium and hafnium produced		
Chromium (Total)	1.364	0.553
Cyanide (Total)	0.737	0.295
Lead	1.032	0.479
Nickel	2.027	1.364
Ammonia (as N)	491.300	216.000
TSS	55.290	44.230
pH	Within the range of 7.5 to 10.0 at all times	

(l) Recovery Off-Gas Wet Air Pollution Control NSPS

Pollutant or Pollutant Property	Maximum For Any One Day	Maximum for Monthly Average
mg/kg (lb/million lbs) of zirconium and hafnium produced		
Chromium (Total)	7.671	3.110
Cyanide (Total)	4.147	1.659
Lead	5.805	2.695
Nickel	11.400	6.671
Ammonia (as N)	2,764.000	1,215.000
TSS	404.300	248.800
pH	Within the range of 7.5 to 10.0 at all times	

(m) Magnesium Recovery Area Vent Wet Air Pollution Control NSPS

Pollutant or Pollutant Property	Maximum For Any One Day	Maximum for Monthly Average
mg/kg (lb/million lbs) of zirconium and hafnium produced		
Chromium (Total)	4.262	1.728
Cyanide (Total)	2.304	0.921
Lead	3.225	1.497
Nickel	6.335	4.262
Ammonia (as N)	1,535.000	675.000
TSS	172.800	138.200
pH	Within the range of 7.5 to 10.0 at all times	

(n) Zirconium Chip Crushing Wet Air Pollution Control NSPS

Pollutant or Pollutant Property	Maximum For Any One Day	Maximum for Monthly Average
mg/kg (lb/million lbs) of zirconium and hafnium produced		
Chromium (Total)	0.000	0.000
Cyanide (Total)	0.000	0.000
Lead	0.000	0.000
Nickel	0.000	0.000
Ammonia (as N)	0.000	0.000
TSS	0.000	0.000
pH	Within the range of 7.5 to 10.0 at all times	

(o) Acid Leachate from Zirconium Metal Production NSPS

Pollutant or Pollutant Property	Maximum For Any One Day	Maximum for Monthly Average
mg/kg (lb/million lbs) of pure zirconium produced		
Chromium (Total)	10.900	4.420
Cyanide (Total)	5.893	2.357
Lead	8.250	3.831
Nickel	16.210	10.900
Ammonia (as N)	3,928.000	1,674.000
TSS	442.000	353.600
pH	Within the range of 7.5 to 10.0 at all times	

(p) Acid Leachate from Zirconium Alloy Production NSPS

Pollutant or Pollutant Property	Maximum For Any One Day	Maximum for Monthly Average
mg/kg (lb/million lbs) of zirconium contained in alloys produced		
Chromium (Total)	5.835	2.366
Cyanide (Total)	3.154	1.262
Lead	4.416	2.050
Nickel	8.674	5.835
Ammonia (as N)	2,102.000	895.800
TSS	236.600	189.300
pH	Within the range of 7.5 to 10.0 at all times	

(q) Leaching Rinse Water from Zirconium Metal Production NSPS

Pollutant or Pollutant Property	Maximum For Any One Day	Maximum for Monthly Average
mg/kg (lb/million lbs) of pure zirconium produced		
Chromium (Total)	21.810	8.840
Cyanide (Total)	11.790	4.715
Lead	16.500	7.661
Nickel	32.410	21.810
Ammonia (as N)	7,856.000	3,453.000
TSS	884.000	707.200
pH	Within the range of 7.5 to 10.0 at all times	

(r) Leaching Rinse Water from Zirconium Alloy Production NSPS

Pollutant or Pollutant Property	Maximum For Any One Day	Maximum for Monthly Average
mg/kg (lb/million lbs) of zirconium contained in alloys produced		
Chromium (Total)	0.292	0.118
Cyanide (Total)	0.158	0.063
Lead	0.221	0.103
Nickel	0.434	0.292
Ammonia (as N)	105.200	46.240
TSS	11.840	9.468
pH	Within the range of 7.5 to 10.0 at all times	

EPA is not promulgating pretreatment standards for indirect dischargers at this time because the one indirect discharger in this subcategory operates only those processes which generate wastewater containing a very small mass of pollutants.

EPA is not promulgating PSNS for primary zirconium and hafnium plants which only produce zirconium or zirconium-nickel alloys by magnesium reduction of ZrO_2. PSNS are promulgated for all other primary zirconium and hafnium plants based on cyanide precipitation, ammonia steam stripping, and chemical precipitation and sedimentation (lime and settle technology), plus multimedia filtration. The following pretreatment standards for new sources are promulgated:

(a) Sand Drying Wet Air Pollution Control PSNS

Pollutant or Pollutant Property	Maximum For Any One Day	Maximum for Monthly Average
mg/kg (lb/million lbs) of zirconium dioxide and hafnium dioxide produced		
Chromium (Total)	0.210	0.085
Cyanide (Total)	0.114	0.045
Lead	0.159	0.074
Nickel	0.312	0 210
Ammonia (as N)	75.710	33.280

(b) Sand Chlorination Off-Gas Wet Air Pollution Control PSNS

Pollutant or Pollutant Property	Maximum For Any One Day	Maximum for Monthly Average
mg/kg (lb/million lbs) of zirconium dioxide and hafnium dioxide produced		
Chromium (Total)	16.080	6.521
Cyanide (Total)	8.690	3.478
Lead	12.170	5.651
Nickel	23.910	16.080
Ammonia (as N)	5,795.000	2,547.000

(c) Sand Chlorination Area Vent Wet Air Pollution Control PSNS

Pollutant or Pollutant Property	Maximum For Any One Day	Maximum for Monthly Average
mg/kg (lb/million lbs) of zirconium dioxide and hafnium dioxide produced		
Chromium (Total)	3.154	1.279
Cyanide (Total)	1.705	0.682
Lead	2.387	1.108
Nickel	4.688	3.154
Ammonia (as N)	1,136.000	499.500

(d) $SiCl_4$ Purification Wet Air Pollution Control PSNS

Pollutant or Pollutant Property	Maximum For Any One Day	Maximum for Monthly Average
mg/kg (lb/million lbs) of zirconium dioxide and hafnium dioxide produced		
Chromium (Total)	2.774	1.125
Cyanide (Total)	1.500	0.600
Lead	2.099	0.975
Nickel	4.124	2.774
Ammonia (as N)	999.500	439.400

(e) Feed Makeup Wet Air Pollution Control PSNS

Pollutant or Pollutant Property	Maximum For Any One Day	Maximum for Monthly Average
mg/kg (lb/million lbs) of zirconium dioxide and hafnium dioxide produced		
Chromium (Total)	2.103	0.852
Cyanide (Total)	1.137	0.455
Lead	1.591	0.739
Nickel	3.126	2.103
Ammonia (as N)	757.500	333.000

(f) Iron Extraction (MIBK) Steam Stripper Bottoms PSNS

Pollutant or Pollutant Property	Maximum For Any One Day	Maximum for Monthly Average
mg/kg (lb/million lbs) of zirconium dioxide and hafnium dioxide produced		
Chromium (Total)	0.830	0.337
Cyanide (Total)	0.449	0.180
Lead	0.628	0.292
Nickel	1.234	0.830
Ammonia (as N)	299.100	131.500

(g) Zirconium Filtrate PSNS

Pollutant or Pollutant Property	Maximum For Any One Day	Maximum for Monthly Average
mg/kg (lb/million lbs) of zirconium dioxide and hafnium dioxide produced		
Chromium (Total)	14.350	5.819
Cyanide (Total)	7.758	3.104
Lead	10.860	5.043
Nickel	21.340	14.350
Ammonia (as N)	5,171.000	2,204.000

(h) Hafnium Filtrate PSNS

Pollutant or Pollutant Property	Maximum For Any One Day	Maximum for Monthly Average
mg/kg (lb/million lbs) of zirconium dioxide and hafnium dioxide produced		
Chromium (Total)	0.000	0.000
Cyanide (Total)	0.000	0.000
Lead	0.000	0.000
Nickel	0.000	0.000
Ammonia (as N)	0.000	0.000

i) Calcining Caustic Wet Air Pollution Control PSNS

Pollutant or Pollutant Property	Maximum For Any One Day	Maximum for Monthly Average
mg/kg (lb/million lbs) of zirconium dioxide and hafnium dioxide produced		
Chromium (Total)	3.329	1.350
Cyanide (Total)	1.799	0.720
Lead	2.519	1.170
Nickel	4.948	3.329
Ammonia (as N)	1,199.000	527.200

(j) Pure Chlorination Wet Air Pollution Control PSNS

Pollutant or Pollutant Property	Maximum For Any One Day	Maximum for Monthly Average
mg/kg (lb/million lbs) of zirconium and hafnium produced		
Chromium (Total)	14.180	5.748
Cyanide (Total)	7.663	3.065
Lead	10.730	4.981
Nickel	21.007	14.180
Ammonia (as N)	5,108.000	2,245.000

(k) Reduction Area Vent Wet Air Pollution Control PSNS

Pollutant or Pollutant Property	Maximum For Any One Day	Maximum for Monthly Average
mg/kg (lb/million lbs) of zirconium and hafnium produced		
Chromium (Total)	1.364	0.553
Cyanide (Total)	0.737	0.295
Lead	1.032	0.479
Nickel	2.027	1.364
Ammonia (as N)	491.300	216.000

(l) Magnesium Recovery Off-Gas Wet Air Pollution Control PSNS

Pollutant or Pollutant Property	Maximum For Any One Day	Maximum for Monthly Average
mg/kg (lb/million lbs) of zirconium and hafnium produced		
Chromium (Total)	7.671	3.110
Cyanide (Total)	4.147	1.659
Lead	5.805	2.695
Nickel	11.400	7.671
Ammonia (as N)	2,764.000	1,215.000

(m) Magnesium Recovery Area Vent Wet Air Pollution Control PSNS

Pollutant or Pollutant Property	Maximum For Any One Day	Maximum for Monthly Average
mg/kg (lb/million lbs) of zirconium and hafnium produced		
Chromium (Total)	4.262	1.728
Cyanide (Total)	2.304	0.921
Lead	3.225	1.497
Nickel	6.335	4.262
Ammonia (as N)	1,535.000	675.000

(n) Zirconium Chip Crushing Wet Air Pollution Control PSNS

Pollutant or Pollutant Property	Maximum For Any One Day	Maximum for Monthly Average
mg/kg (lb/million lbs) of zirconium and hafnium produced		
Chromium (Total)	0.000	0.000
Cyanide (Total)	0.000	0.000
Lead	0.000	0.000
Nickel	0.000	0.000
Ammonia (as N)	0.000	0.000

(o) Acid Leachate from Zirconium Metal Production PSNS

Pollutant or Pollutant Property	Maximum For Any One Day	Maximum for Monthly Average
mg/kg (lb/million lbs) of pure zirconium produced		
Chromium (Total)	10.900	4.420
Cyanide (Total)	5.893	2.357
Lead	8.250	3.831
Nickel	16.210	10.900
Ammonia (as N)	3,928.000	1,674.000

(p) Acid Leachate from Zirconium Alloy Production PSNS

Pollutant or Pollutant Property	Maximum For Any One Day	Maximum for Monthly Average
mg/kg (lb/million lbs) of zirconium contained in alloys produced		
Chromium (Total)	5.835	2.366
Cyanide (Total)	3.154	1.262
Lead	4.416	2.050
Nickel	8.674	5.835
Ammonia (as N)	2,102.000	895.800

(q) Leaching Rinse Water from Zirconium Metal Production PSNS

Pollutant or Pollutant Property	Maximum For Any One Day	Maximum for Monthly Average
mg/kg (lb/million lbs) of pure zirconium produced		
Chromium (Total)	21.810	8.840
Cyanide (Total)	11.790	4.715
Lead	16.500	7.661
Nickel	32.410	21.810
Ammonia (as N)	7,856.000	3,453.000

(r) Leaching Rinse Water from Zirconium Alloy Production PSNS

Pollutant or Pollutant Property	Maximum For Any One Day	Maximum for Monthly Average
mg/kg (lb/million lbs) of zirconium contained in alloys produced		
Chromium (Total)	0.292	0.118
Cyanide (Total)	0.158	0.063
Lead	0.221	0.103
Nickel	0.434	0.292
Ammonia (as N)	105.200	46.240

EPA is not promulgating BCT for this subcategory at this time.

SECTION III

SUBCATEGORY PROFILE

This section of the primary zirconium and hafnium supplement describes the raw materials and processes used in producing primary zirconium and hafnium and presents a profile of the plants identified in this study.

Zirconium metal is noted for its excellent corrosion resistance. Because of several properties such as its low neutron absorption cross section and low radioactivity after radiation exposure, high-purity, hafnium-free zirconium, called reactor grade zirconium, is a valuable inert material used for nuclear reactor construction. Hafnium metal is a by-product of zirconium metal production. Because of its high neutron absorption cross section, excellent hot water corrosion resistance, and good ductility and machinability, the major use of hafnium metal is for control rods in nuclear reactors.

DESCRIPTION OF PRIMARY ZIRCONIUM AND HAFNIUM PRODUCTION

The production processes used at primary zirconium and hafnium manufacturing plants depend largely on the raw materials used. Six basic processing operations may be performed:

1. Sand chlorination,
2. Separation,
3. Calcining,
4. Pure chlorination,
5. Reduction, and
6. Purification.

The plants which produce zirconium and hafnium from zircon sand use all six of these process steps. Plants which produce zirconium from zirconium dioxide practice reduction and purification only. Production processes for the primary zirconium and hafnium subcategory are presented schematically in Figures III-1 and III-2 (pages 5090 and 5092) and described below.

RAW MATERIALS

The principal raw material used in the primary zirconium and hafnium industry is the ore mineral zircon, $ZrSiO_4$, found in zircon sand. It is obtained primarily as beach sands from Australia, but it may also originate in Florida, South Africa, or India. Hafnium dioxide comprises about 2 percent by weight of the metal in zircon sand.

SAND CHLORINATION

After drying, concentrated zircon sand is mixed with coke, ground and fed continuously to the top of a fluidized bed chlorinator. The basic sand chlorination reaction, conducted at approximately 950°C, is:

$$ZrSiO_4 + 2C + 4Cl_2 \longrightarrow ZrCl_4 + SiCl_4 + 2CO_2$$

Crude zirconium tetrachloride and silicon tetrachloride are condensed from the off-gases. Crude zirconium tetrachloride refers to a mixture of zirconium tetrachloride and hafnium tetrachloride. The crude zirconium tetrachloride is then hydrolyzed with water and the resulting solution is filtered to remove suspended solids. The reaction which occurs during this feed makeup step is:

$$ZrCl_4 + H_2O \longrightarrow ZrOCl_2 + 2HCl$$

Several waste streams are generated during sand chlorination. Wastewaters originate from the air pollution control devices which are required for the ore drying process, the chlorination and condensation processes, the silicon tetrachloride purification process, as well as the feed makeup process.

SEPARATION

Iron is removed from the zirconium-hafnium solution from the feed makeup step ($ZrOCl_2$ and $HfOCl_2$) by extraction, resulting in a waste ferric chloride solution.

The iron free zirconium and hafnium solution is passed through a series of liquid-liquid extraction, stripping, and scrubbing steps to separate zirconium from hafnium. Liquid-liquid extraction using methyl isobutyl ketone (MIBK) as a solvent separates zirconium from hafnium by preferentially extracting hafnium into the solvent phase.

Hafnium is stripped from the solvent to the aqueous phase by acidification and the recovered solvent is recycled, after treatment, within the separations operation. The hafnium solution is reacted with ammonium hydroxide to precipitate hafnium hydroxide. The precipitate is recovered by filtration and the residual wastewater discharged to treatment. After drying, the hafnium hydroxide is either stored or calcined to produce hafnium dioxide, HfO_2.

Zirconium is recovered from the aqueous zirconium stream through chemical treatment and further extraction with MIBK. Zirconium is precipitated and filtered as zirconium sulfate, $Zr_5O_8(SO_4)_2$. The filter cake can be either sent to calcining or repulped with ammonium hydroxide. Ammonium hydroxide is added to convert the zirconium sulfate to zirconium hydroxide and to remove trace metals from the zirconium product. The precipitate is filtered to remove water and

sent to the calcining furnace for further processing. The filtrate is discharged as a wastewater stream.

CALCINING

From this point in the process, hafnium and zirconium are processed separately but identically. The hafnium and zirconium filter cakes are calcined to produce HfO_2 and ZrO_2. Both water scrubbers and caustic scrubbers are used to control emissions from the kilns. The water from the scrubbers used to control particulate emissions is recycled to the separations process to recover zirconium and hafnium. The scrubber water is therefore considered to be a process stream and not a wastewater stream.

When zirconium is calcined, a caustic scrubber for SO_2 removal is used in addition to the water scrubbers. Even when the zirconium sulfate filter cake has been repulped during the separation process to form zirconium hydroxide, some of the sulfate will remain unreacted. A caustic scrubber is therefore necessary to control SO_2 emissions during calcination.

PURE CHLORINATION

Pure chlorination is essentially the same process as sand chlorination. The pure zirconium or hafnium oxide is mixed with fine coke and reacted with chlorine to produce the tetrachloride gas. The pure zirconium or hafnium tetrachloride is then recovered in condensers. As with sand chlorination, the water and caustic scrubbers for air pollution control are a wastewater source.

REDUCTION

Pure zirconium tetrachloride and hafnium tetrachloride are reduced to their respective metals in a batch process using magnesium in a reduction furnace. The tetrachloride is added to magnesium in a retort furnace where it is converted to zirconium or hafnium metal and magnesium chloride.

Off-gases from the furnace pass through a water scrubber before being released. Because the scrubber blowdown is recycled to the separation process to recover zirconium and hafnium, it is considered to be a process stream. The water scrubber which controls the area ventilation gases is not reused in the separation process, and is a source of wastewater.

Zirconium oxide is mixed with magnesium metal powder and placed in a steel cylinder. The cylinder is then placed in a furnace and retorted at approximately 950°C. Once initiated, the reaction (which produces zirconium metal sponge and magnesium oxide) becomes self-sustaining. There are no reported wastewater sources in this zirconium oxide reduction process.

Zirconium oxide can also be used to produce zirconium-nickel alloys. The process is similar to the magnesium reduction

operation except that calcium hydride is used as the reducing agent in the furnace and nickel is added directly to the mixture of zirconium oxide and calcium.

PURIFICATION

When zirconium or hafnium metal is produced by magnesium reduction of the tetrachloride, a crude metal regulus with magnesium chloride is formed in the furnace. The magnesium chloride is separated from the zirconium or hafnium regulus to produce zirconium or hafnium sponge.

A different purification process is used when zirconium metal or zirconium-nickel alloys are produced by magnesium reduction of zirconium oxide. The zirconium sponge is removed from the reduction cylinder and pulverized. The impurities are leached out with acid, and the purified metal is rinsed with water. The product is then dried and sold as metal or alloy powder.

Wastewater sources from the purification process include acid leachate and leaching rinse water. No wastewater is associated with magnesium chloride separation. An additional wastewater stream is generated by the wet air pollution control for the crushing operation.

PROCESS WASTEWATER SOURCES

A variety of processes are involved in primary zirconium and hafnium production. The wastewater sources that are associated with this subcategory can be subdivided as follows:

1. Sand drying wet air pollution control,
2. Sand chlorination off-gas wet air pollution control,
3. Sand chlorination area vent wet air pollution control,
4. $SiCl_4$ purification wet air pollution control,
5. Feed makeup wet air pollution control,
6. Iron extraction (MIBK) steam stripper bottoms,
7. Zirconium filtrate,
8. Hafnium filtrate,
9. Calcining caustic wet air pollution control,
10. Pure chlorination wet air pollution control,
11. Reduction area vent wet air pollution control,
12. Magnesium recovery off-gas wet air pollution control,
13. Magnesium recovery area vent wet air pollution control
14. Zirconium chip crushing wet air pollution control,
15. Acid leachate from zirconium metal production,
16. Acid leachate from zirconium alloy production,
17. Leaching rinse water from zirconium metal production, and
18. Leaching rinse water from zirconium alloy production.

These wastewater streams are identified in Figures III-1 and III-2 (pages 5090 and 5092) by their respective numbers.

OTHER WASTEWATER SOURCES

Other wastewater streams are sometimes associated with the production of primary zirconium and hafnium. These wastewaters include stormwater runoff, and maintenance and cleanup water. These wastewater streams are not considered as a part of this rulemaking. EPA believes that the flows and pollutant loadings associated with these streams are insignificant relative to the wastewater streams selected and are best handled by the appropriate permit authority on a case-by-case basis under authority of Section 402 of the Clean Water Act.

AGE, PRODUCTION, AND PROCESS PROFILE

Figure III-3 (page 5093) shows the location of the three primary zirconium and hafnium plants operating in the United States. This figure shows one plant in Oregon, one in Utah, and the third in Massachusetts.

Table III-1 (page 5086) shows relative plant ages. Plant age covers a 42 year span, the oldest plant having been built in 1937. Table III-2 (page 5087) shows relative production ranges. The production varies widely from plant to plant.

Table III-3 (page 5088) lists the major production processes associated with the manufacture of primary zirconium and hafnium. Also shown is the number of plants discharging wastewater from these processes.

TABLE III-1

INITIAL OPERATING YEAR (RANGE) SUMMARY OF PLANTS IN THE PRIMARY ZIRCONIUM AND HAFNIUM SUBCATEGORY BY DISCHARGE TYPE

Type of Plant	Present-1966 (0-17)	1965-1946 (15-35)	1945-1926 (35-55)	Before 1926	(Total)
Direct	0	1	0	0	1
Indirect	0	0	1	0	1
Zero	1	0	0	0	1
Total	1	1	1	0	3

TABLE III-2

PRODUCTION RANGES FOR THE PRIMARY ZIRCONIUM AND HAFNIUM SUBCATEGORY

Zirconium Products Production Ranges for 1982 (Metric Tons/Year)	Number of Plants

These data are not presented here because the data from which they are calculated have been claimed to be confidential

Hafnium Products Production Ranges for 1982 Tons/Year)	Number of Plants

These data are not presented here because the data from which they are calculated have been claimed to be confidential

Table III-3

SUMMARY OF PRIMARY ZIRCONIUM AND HAFNIUM SUBCATEGORY PROCESSES AND ASSOCIATED WASTE STREAMS

Process or Waste Stream	Number of Plants With Process	Number of Plants Reporting Generation of Wastewater*
Sand Chlorination	2	
- Sand Drying Wet Air Pollution Control	1	1
- Sand Chlorination Off-Gas Wet Air Pollution Control	2	2
- Sand Chlorination Area-Vent Wet Air Pollution Control	2	1
- $SiCl_4$ Purification Wet Air Pollution Control	2	1
- Feed Makeup Wet Air Pollution Control	2	2
Separation	2	
- Iron Extraction (MIBK) Steam Stripper Bottoms	2	2
- Zirconium Filtrate	2	2
- Hafnium Filtrate	2	2
Calcination	2	
- Calcining Caustic Wet Air Pollution Control	2	2
Pure Chlorination	3	
- Pure Chlorination Wet Air Pollution Control	2	1
Reduction	3	
- Reduction Area-Vent Wet Air Pollution Control	3	2

Table III-3 (Continued)

SUMMARY OF PRIMARY ZIRCONIUM AND HAFNIUM SUBCATEGORY
PROCESSES AND ASSOCIATED WASTE STREAMS

Process or Waste Stream	Number of Plants With Process	Number of Plants Reporting Generation of Wastewater*
Purification	3	
- Magnesium Recovery Off-Gas Wet Air Pollution Control	2	1
- Magnesium Recovery Area Vent Wet Air Pollution Control	1	1
- Zirconium Chip Crushing Wet Air Pollution Control	1	0
- Acid Leachate from Zirconium Metal or Zirconium Alloy Production	1	1
- Leaching Rinse Water from Zirconium Metal or Zirconium Alloy Production	1	1

*Through reuse or evaporation practices, a plant may "generate" a wastewater from a particular process but not discharge it.

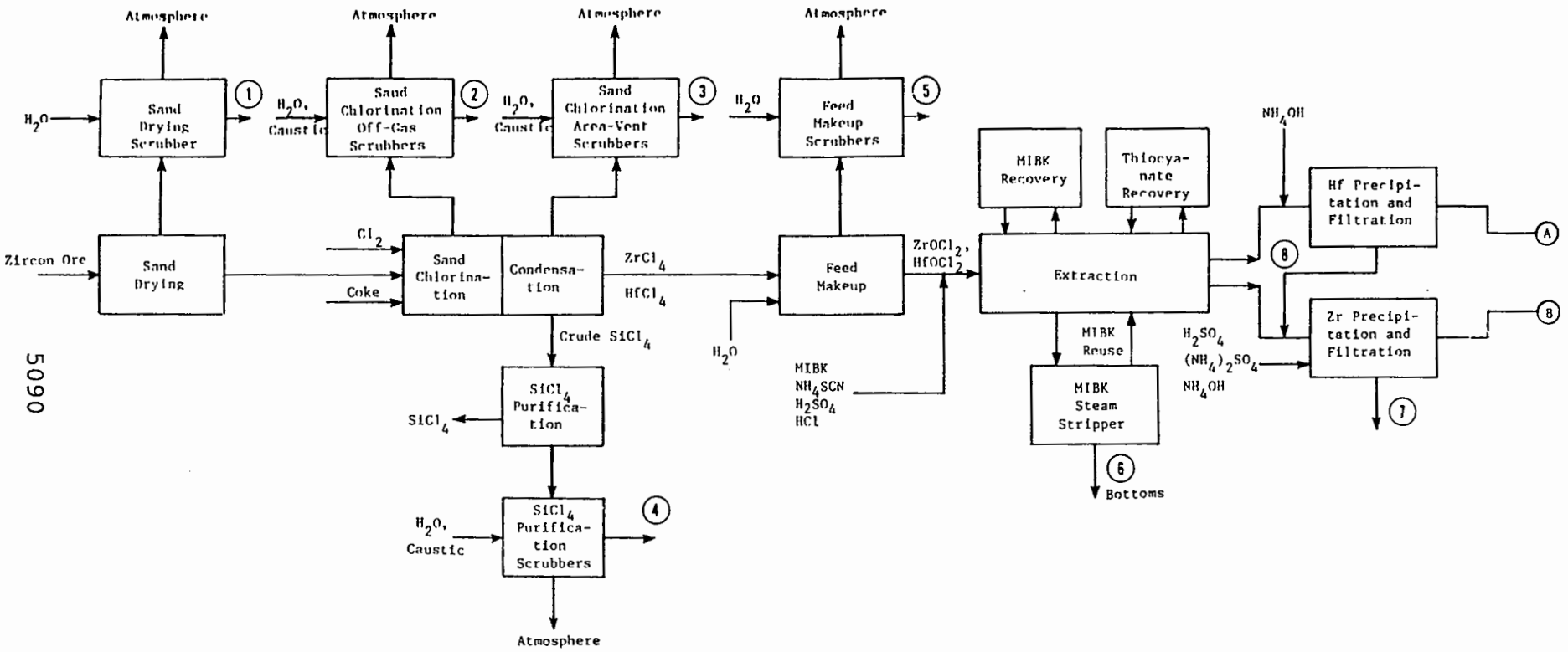

Figure III-1

PRIMARY ZIRCONIUM AND HAFNIUM PRODUCTION PROCESSES

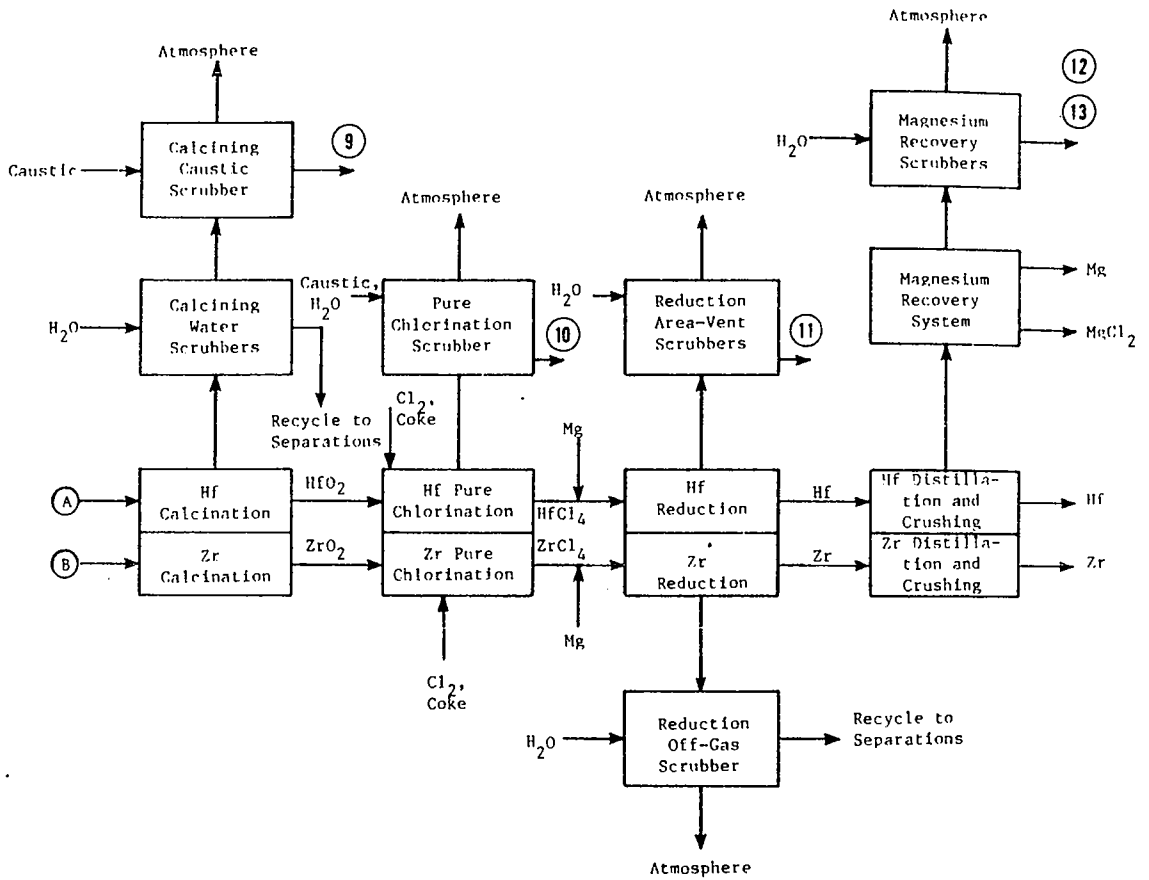

Figure III-1 (Continued)

PRIMARY ZIRCONIUM AND HAFNIUM PRODUCTION PROCESSES

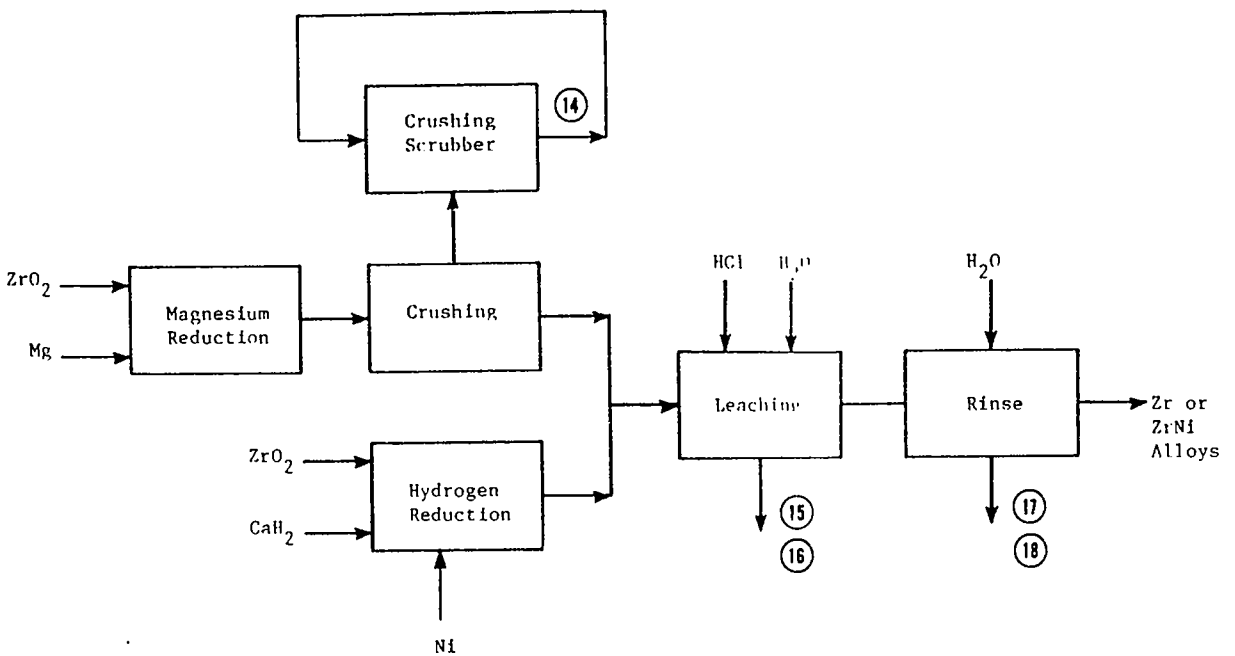

Figure III-2

PRIMARY ZIRCONIUM AND HAFNIUM PRODUCTION PROCESSES

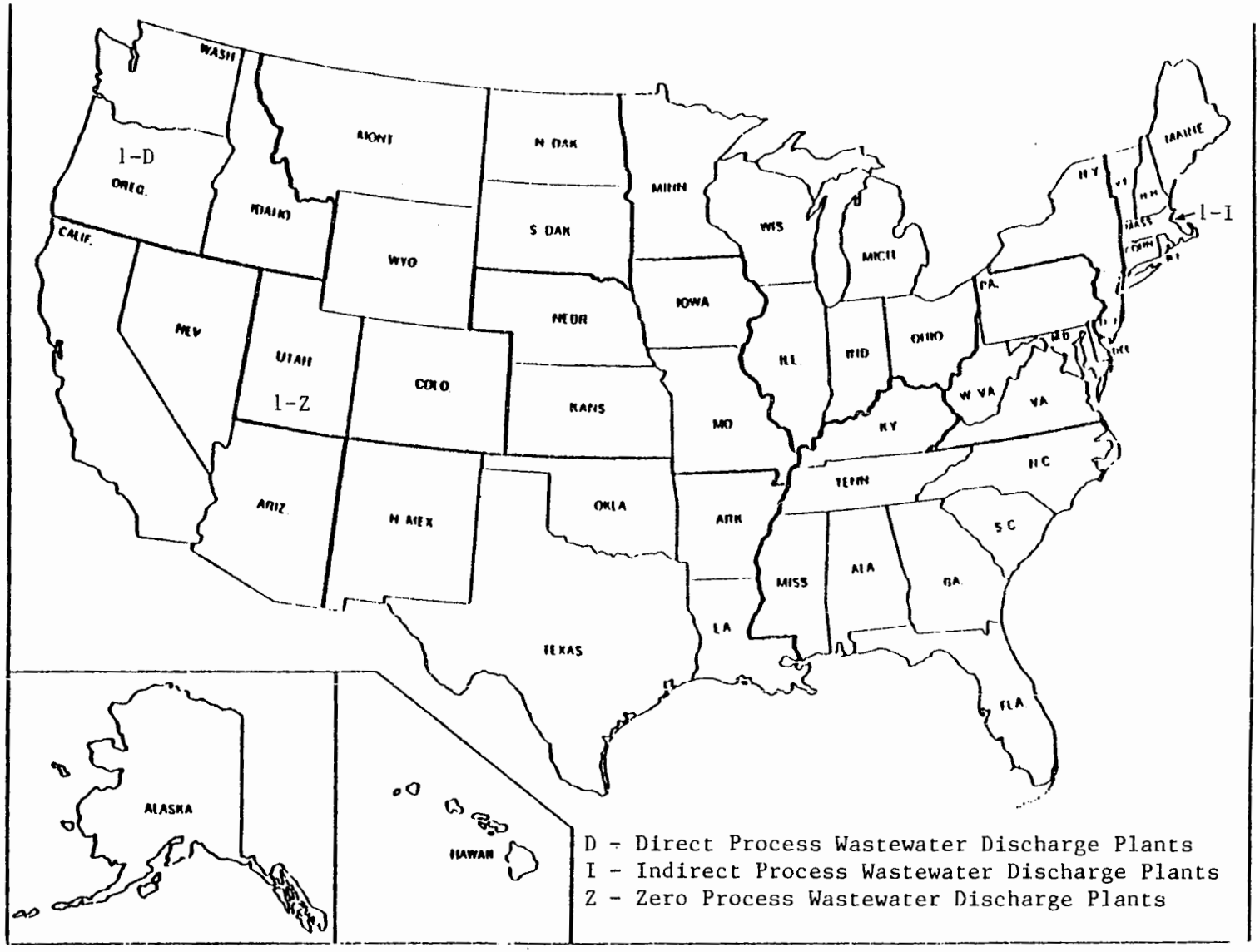

Figure III-3

GEOGRAPHIC LOCATIONS OF THE PRIMARY ZIRCONIUM AND HAFNIUM SUBCATEGORY PLANTS

THIS PAGE INTENTIONALLY LEFT BLANK

SECTION IV

SUBCATEGORIZATION

This section summarizes the factors considered during the designation of the related subdivisions of the primary zirconium and hafnium subcategory.

FACTORS CONSIDERED IN SUBDIVIDING THE PRIMARY ZIRCONIUM AND HAFNIUM SUBCATEGORY

The factors listed for general subcategorization were each evaluated when considering subdivision of the primary zirconium and hafnium subcategory. In the discussion that follows, these factors will be described only as they pertain to this particular subcategory.

Because different production processes generate dissimilar wastewaters and the combination of production processes utilized varies from plant to plant within the subcategory, effluent limitations and standards are developed for each specific wastewater source. The limitations and standards will be based on specific flow allowances for the following subdivisions:

1. Sand drying wet air pollution control,
2. Sand chlorination off-gas wet air pollution control,
3. Sand chlorination area vent wet air pollution control,
4. $SiCl_4$ purification wet air pollution control,
5. Feed makeup wet air pollution control,
6. Iron extraction (MIBK) stream stripper bottoms,
7. Zirconium filtrate,
8. Hafnium filtrate,
9. Calcining caustic wet air pollution control,
10. Pure chlorination wet air pollution control,
11. Reduction area vent wet air pollution control,
12. Magnesium recovery off-gas wet air pollution control,
13. Magnesium recovery area vent wet air pollution control,
14. Zirconium chip crushing wet air pollution control,
15. Acid leachate from zirconium metal production,
16. Acid leachate from zirconium alloy production,
17. Leaching rinse water from zirconium metal production, and
18. Leaching rinse water from zirconium alloy production.

These subdivisions follow directly from differences between the six processing steps used in zirconium and hafnium production. Sand chlorination, separation, calcining, pure chlorination, reduction, and purification each have various steps which may generate wastewaters.

Chlorination of zircon sand, $ZrSiO_4$ to crude zirconium tetrachloride establishes the need for the first five subdivisions. Air pollution control may be required for sand

drying operations before chlorination. During chlorination, the tetrachloride is separated and recovered from the reaction gas using a series of condensers. Wet air pollution control devices may be used to control off-gases from the condensers and fumes from the chlorination area. One additional waste stream results from the purification of silicon tetrachloride, a by-product of the chlorination reaction. The fifth subdivision results from wet air pollution control used to control off-gases from the feed makeup step. These five subdivisions are necessary to account for these wastewater sources.

The sixth, seventh, and eighth subdivisions result from the different processes used in zirconium and hafnium separation. MIBK is recovered by steam stripping, creating a bottoms wastewater stream. Hafnium precipitation and filtration creates a wastewater stream which may be discharged or recycled. Zirconium precipitation and filtration also creates a wastewater stream which is discharged. Separate subdivisions are necessary to account for these three wastewater sources.

Wet air pollution control is required for the off-gases formed when zirconium and hafnium filter cakes are calcined, however, the water from these scrubbers sometimes can be reused. The ninth subdivision is created to allow for a wastewater flow from the caustic scrubbers.

Chlorination of the separated and calcined zirconium and hafnium oxides establishes the need for the tenth subdivision. This pure chlorination step is essentially the same as the sand chlorination step and requires wet air pollution control for the off-gases.

The eleventh through thirteenth subdivisions result from differences in zirconium and hafnium reduction processes. When zirconium and hafnium tetrachlorides are reduced by magnesium, wet air pollution control may be required for reduction area ventilation vapors and for the magnesium recovery process. Separate subdivisions for the discharges from the reduction area ventilation scrubber, the magnesium recovery off-gas scrubber, and the magnesium recovery area vent scrubber are necessary to account for the presence or absence of these wastewater sources.

The final five subdivisions result from differences in zirconium purification practices. When the reduction process is complete, the zirconium is removed from the reaction container and crushed. A wastewater stream is generated by the wet air pollution control devices associated with the crushing operation. The impurities remaining in the crushed sponge are removed by vacuum distillation or by leaching. Leaching and rinsing result in wastewater streams. Leach and rinse subdivisions are necessary for zirconium metal and zirconium alloy production by reduction of zirconium dioxide. Subdivisions for crushing wet air pollution control and leaching and rinsing are necessary to reflect the presence or absence of these processes.

OTHER FACTORS

Factors other than manufacturing processes were determined to be inappropriate bases for subdivision. Air pollution control methods, treatment costs, and total energy requirements are functions of the selected subcategorization factors, namely metal product, raw materials, and production processes. Factors such as plant age, plant size, and number of employees were also evaluated and determined to be inappropriate bases for subdivision of this nonferrous metals subcategory.

PRODUCTION NORMALIZING PARAMETERS

As discussed previously, the effluent limitations and standards developed in this document establish mass limitations on the discharge of specific pollutant parameters. To allow these limitations and guidelines to be applied to plants with various production capacities, the mass of pollutant discharged must be related to a unit of production. This factor is known as the production normalizing parameter (PNP). In general, the amount of zirconium and hafnium or their respective oxides produced is used as the PNP. This is based on the principle that the amount of water generated is proportional to the amount of product made. The PNPs for the 18 subdivisions or building blocks are as follows:

Subdivision	PNP
1. Sand drying wet air pollution control	kkg of zirconium dioxide and hafnium dioxide produced
2. Sand chlorination off-gas wet air pollution control	kkg of zirconium dioxide and hafnium dioxide produced
3. Sand chlorination area-vent wet air pollution control	kkg of zirconium dioxide and hafnium dioxide produced
4. $SiCl_4$ purification wet air pollution control	kkg of zirconium dioxide and hafnium dioxide produced
5. Feed makeup wet air pollution control	kkg of zirconium dioxide and hafnium dioxide produced
6. Iron extraction (MIBK) steam stripper bottoms	kkg of zirconium dioxide and hafnium dioxide produced
7. Zirconium filtrate	kkg of zirconium dioxide and hafnium dioxide

	produced
8. Hafnium filtrate	kkg of zirconium dioxide and hafnium dioxide produced
9. Calcining caustic wet air pollution control	kkg of zirconium dioxide and hafnium dioxide produced
10. Pure chlorination wet air pollution control	kkg of zirconium and hafnium produced
11. Reduction area vent wet air pollution control	kkg of zirconium and hafnium produced
12. Magnesium recovery off-gas wet air pollution control	kkg of zirconium and hafnium produced
13. Magnesium recovery area vent wet air pollution control	kkg of zirconium and hafnium produced
14. Zirconium chip crushing wet air pollution control	kkg of zirconium and hafnium produced
15. Acid leachate from zirconium metal production	kkg of pure zirconium produced
16. Acid leachate from zirconium alloy production	kkg of zirconium contained in alloys produced
17. Leaching rinse water from zirconium metal production	kkg of pure zirconium produced
18. Leaching rinse water from zirconium alloy production	kkg of zirconium contained in alloys produced

SECTION V

WATER USE AND WASTEWATER CHARACTERISTICS

This section describes the characteristics of wastewater associated with the primary zirconium and hafnium subcategory. Data used to quantify wastewater flow and pollutant concentrations are presented, summarized, and discussed. The contribution of specific production processes to the overall wastewater discharge from primary zirconium and hafnium plants is identified whenever possible.

The two principal data sources used are data collection portfolios (dcp) and field sampling results. Data collection portfolios, completed for each of the primary zirconium and hafnium plants, contain information regarding wastewater flows and production levels.

In order to quantify the pollutant discharge from primary zirconium and hafnium plants, a field sampling program was conducted. Wastewater samples were analyzed for 124 of the 126 toxic pollutants and other pollutants deemed appropriate. Because the analytical standard for TCDD was judged to be too hazardous to be made generally available, samples were never analyzed for this pollutant. Samples were also never analyzed for asbestos. There is no reason to expect that TCDD or asbestos would be present in primary zirconium and hafnium wastewater. A total of two plants were selected for sampling in the zirconium and hafnium manufacturing subcategory, representing two-thirds of the plants in the subcategory. In general, the samples were analyzed for cyanide and three classes of pollutants: priority organic pollutants, priority metal pollutants, and criteria pollutants (which includes both conventional and nonconventional pollutants).

After proposal, EPA gathered additional wastewater sampling data for twelve subdivisions in this subcategory. These data were acquired through a self sampling program which was initiated at the specific request of EPA. The data include analysis for the toxic metals cadmium, chromium, lead, nickel, thallium and zinc. The data also include analyses for cyanide and the nonconventional pollutants ammonia, hafnium, radium 226 and zirconium. These data show pollutant concentrations similar to those indicated by the data which EPA had acquired for these subdivisions prior to proposal (see Tables V-19 through V-25 (pages 5120 to 5121). The data also support the assumptions which EPA had made concerning the presence and concentrations of pollutants in those subdivisions where we did not have analytical data for specific pollutants. For this reason, the selection of pollutant parameters for limitation in this subcategory (Section VI) has not been revised based on this new data.

As described in Section IV of this supplement, the primary zirconium and hafnium subcategory has been divided into 18 subdivisions or building blocks, so that the promulgated regulation contains mass discharge limitations and standards for 18 unit processes discharging process wastewater. Differences in the wastewater characteristics associated with these subdivisions are to be expected. For this reason, wastewater streams corresponding to each subdivision are addressed separately in the discussions that follow. These wastewater sources are:

1. Sand drying wet air pollution control,
2. Sand chlorination off-gas wet air pollution control,
3. Sand chlorination area vent wet air pollution control,
4. $SiCl_4$ purification wet air pollution control,
5. Feed makeup wet air pollution control,
6. Iron extraction (MIBK) steam stripper bottoms,
7. Zirconium filtrate,
8. Hafnium filtrate,
9. Calcining caustic wet air pollution control,
10. Pure chlorination wet air pollution control,
11. Reduction area vent wet air pollution control,
12. Magnesium recovery off-gas wet air pollution control,
13. Magnesium recovery area vent wet air pollution control,
14. Zirconium chip crushing wet air pollution control,
15. Acid leachate from zirconium metal production,
16. Acid leachate from zirconium alloy production,
17. Leaching rinse water from zirconium metal production, and
18. Leaching rinse water from zirconium alloy production.

WASTEWATER FLOW RATES

Data supplied by data collection portfolio responses were evaluated, and two flow-to-production ratios were calculated for each stream. The two ratios, water use and wastewater discharge flow, are differentiated by the flow value used in calculation. Water use is defined as the volume of water required for a given process per mass of zirconium or hafnium product and is therefore based on the sum of recycle and make-up flows to a given process. Wastewater flow discharged after pretreatment or recycle (if these are present) is used in calculating the production normalized flow--the volume of wastewater discharged from a given process to further treatment, disposal, or discharge per mass of zirconium or hafnium produced. Differences between the water use and wastewater flows associated with a given stream result from recycle, evaporation, and carry-over on the product. The production values used in this calculation correspond to the production normalizing parameter, PNP, assigned to each stream, as outlined in Section IV. As an example, the acid leachate from zirconium metal production wastewater is related to zirconium metal production. The discharge rate is therefore expressed in liters of leachate per metric ton of zirconium metal production.

The production normalized flows were compiled and statistically analyzed by stream type. These production normalized water use and discharge flows are presented by subdivision in Tables V-1 through V-18 (pages 5107 to 5119). Where appropriate, an attempt was made to identify factors that could account for variations in water use and discharge rates. These variations are discussed later in this section by subdivision. A similar analysis of factors affecting the wastewater flows is presented in Sections IX, X, XI, and XII where representative BPT, BAT, NSPS, and pretreatment flows are selected for use in calculating the effluent limitations.

The water use and discharge rates shown do not include nonprocess wastewater, such as rainfall runoff and noncontact cooling water.

WASTEWATER CHARACTERISTICS DATA

Data used to characterize the various wastewaters associated with zirconium and hafnium production come from three sources: data collection portfolios, analytical data from field sampling trips made prior to proposal, and data from a self sampling episode conducted after proposal.

DATA COLLECTION PORTFOLIOS

In the data collection portfolios, plants were asked to indicate which of the priority pollutants were known or believed to be present in their effluent. Of the plants that discharge wastewaters, one plant indicated that nickel was known to be present. Another plant stated that some of the priority metals including copper, lead, and zinc were believed to be present in their effluent, as well as several toxic organic pollutants and cyanide. The priority organics believed present include carbon tetrachloride, 1,1,1-trichloroethane, hexachloroethane, 1,1-dichloroethane, chloroform, methyl chloride, bis (2-ethylhexyl) phthalate, di-n-butyl phthalate, diethyl phthalate, and trichloroethylene. The plant listing these pollutants indicated that the pollutants exist at only trace or background levels, i.e., not necessarily above concentrations achievable by defined treatment.

FIELD SAMPLING DATA

In order to quantity the concentrations of pollutants present in wastewater from primary zirconium and hafnium plants, wastewater samples were collected at two of the three plants. Raw wastewater characteristics and related data have been claimed as confidential by the companies sampled. Hence raw wastewater data, before wastewater treatment, and related in-process information indicating the sampling sites and contributing production processes are not shown in detail in this document. Such information was available to EPA at the time this regulation was being developed.

Several points regarding these tables should be noted. First, the data tables include some samples measured at concentrations

considered not quantifiable. The base-neutral extractable, acid extractable, and volatile organics are generally considered not quantifiable at concentrations equal to or less than 0.010 mg/l. Below this concentration, organic analytical results are not quantitatively accurate; however, the analyses are useful to indicate the presence of a particular pollutant. The pesticide fraction is considered not quantifiable at concentrations equal to or less than 0.005 mg/l. Nonquantifiable results are designated in the tables with an asterisk (double asterisk for pesticides).

Second, the detection limits shown on the data tables are not the same in all cases as the published detection limits for these pollutants by the same analytical methods. The detection limits used were reported with the analytical data and hence are the appropriate limits to apply to the data. Detection limit variation can occur as a result of a number of laboratory-specific, equipment-specific, and daily operator-specific factors. These factors can include day-to-day differences in machine calibration, variation in stock solutions, and variation in operators.

Third, the statistical analysis of data includes some samples measured at concentrations considered not quantifiable. Data reported as an asterisk or with a "less than" sign are considered as detected but below quantifiable concentrations, and a value of zero is used for averaging. A value of zero is also used for averaging if a pollutant is reported as not detected. Finally, toxic metal values reported as less than a certain value were considered as below quantification and a value of zero is used in the calculation of the average.

Finally, appropriate source water concentrations are presented with the summaries of the sampling data.

The method by which each sample was collected is indicated by number as follows:

1. One-time grab
2. Manual composite during intermittent process operation
3. 8-hour manual composite
4. 8-hour automatic composite
5. 24-hour manual composite
6. 24-hour automatic composite

WASTEWATER CHARACTERISTICS AND FLOWS BY SUBDIVISION

Since primary zirconium and hafnium production involves 18 principal sources of wastewater, each of which has potentially different characteristics and flows, the wastewater characteristics and discharge rates corresponding to each subdivision will be described separately. A brief discussion of why the associated production processes generate a wastewater and explanations for variations of water use within each subdivision will also be presented.

SAND DRYING WET AIR POLLUTION CONTROL

The principal raw material used in the primary zirconium and hafnium industry is the ore mineral zircon ($ZrO_2 \cdot SiO_2$) found in zircon sand. In the one plant which reports sand drying before chlorination, the associated wet air pollution control represents a source of wastewater. The water use and discharge rates for this stream are presented in Table V-1.

SAND CHLORINATION OFF-GAS WET AIR POLLUTION CONTROL

Crude zirconium tetrachloride and silicon tetrachloride are separated and recovered from the chlorination off-gases using a series of condensers. Off-gases from the condensers pass through a wet air pollution control system and thus represent a single wastewater source. Table V-2 (page 5107) lists the water use and discharge rates for sand chlorination off-gas wet air pollution control.

SAND CHLORINATION AREA-VENT WET AIR POLLUTION CONTROL

Ventilation from the chlorination area is routed to a chlorination area-vent scrubber system. The water use and discharge rates for sand chlorination area-vent wet air pollution control are listed in Table V-3 (page 5108).

$SiCl_4$ PURIFICATION WET AIR POLLUTION CONTROL

The SiCl4 may be purified in a process which uses scrubbers. The water use and discharge rates for the resulting wastewater stream are listed in Table V-4 (page 5108). The sampling data for $SiCl_4$ purification wet air pollution control are presented in Table V-19 (page 5120).

FEED MAKEUP WET AIR POLLUTION CONTROL

Crude zirconium tetrachloride is prepurified before being sent to the separations process. This feed makeup step requires water scrubbers for wet air pollution control. The resulting wastewater is characterized by treatable concentrations of suspended solids, zirconium, cyanide, and a low pH. The water use and discharge rates for this stream are listed in Table V-5 (page 5109). Sampling data for feed makeup wet air pollution control are presented in Table V-20 (page 5120).

IRON EXTRACTION (MIBK) STEAM STRIPPER BOTTOMS

After iron impurities are extracted from the hafnium, the residual extraction solution is steam stripped to recover MIBK which is reused in the process. The bottoms from the iron extraction MIBK steam stripper are discharged as a wastewater stream. Water use and discharge rates for iron extraction (MIBK) steam stripper bottoms are listed in Table V-6

(page 5110). Sampling data for this stream are presented in Table V-21 (page 5120).

ZIRCONIUM FILTRATE

After zirconium has been separated from hafnium it is precipitated from solution. The resulting zirconium sulfate compound is filtered, and the filter cake may either sent to the calcining furnace directly or repulped with ammonium hydroxide to form zirconium hydroxide prior to calcining. The water use and discharge rates for the zirconium filtrate are listed in Table V-7 (page 5110). Sampling data for this stream are presented in Table V-22 (page 5120).

HAFNIUM FILTRATE

After hafnium has been separated from zirconium using solvent extraction, hafnium is precipitated as a hydroxide. The resulting hafnium hydroxide is filtered and the cake is sent to storage or to calcining. The filtrate may be discarded or reused in the zirconium precipitation process. The water use and discharge rates for hafnium filtrate are listed in Table V-8 (page 5111). Sampling data for this wastewater stream are presented in Table V-23 (page 5120).

CALCINING CAUSTIC WET AIR POLLUTION CONTROL

The zirconium and hafnium filter cakes are fed to rotary kilns for conversion to metal oxides. Before being released to the atmosphere, the kiln off-gases are treated in scrubbers. Some discharges from the water scrubbers are reused in the separations area while other discharges containing sodium sulfite are discharged. The water use and discharge rates for calcining wet air pollution control are listed in Table V-9 (page 5112). Sampling data for this stream are presented in Table V-24 (page 5121).

PURE CHLORINATION WET AIR POLLUTION CONTROL

Pure chlorination is similar to sand chlorination, except that the chlorination of calcined zirconium oxide and calcined hafnium oxide is carried out in separate reactors. The wastewaters generated in this area are similar to the sand chlorination scrubber wastewater and contains treatable levels of zirconium, chlorine and particulates. Table V-10 (page 5113) lists the water use and discharge rates for pure chlorination wet air pollution control.

REDUCTION AREA-VENT WET AIR POLLUTION CONTROL

Zirconium and hafnium tetrachlorides are reduced to their respective metals by reaction with magnesium in reduction furnaces. The discharge from the water scrubbers which treat the reduction off-gases and area ventilation is partially

recycled and the remainder discharged. The water use and discharge rates for reduction area-vent wet air pollution control are listed in Table V-11 (page 5114).

MAGNESIUM RECOVERY OFF-GAS WET AIR POLLUTION CONTROL

Water scrubbers installed for air pollution control in the magnesium recovery area discharge a wastewater. The water use and discharge rates for magnesium recovery wet air pollution control are listed in Table V-12 (page 5114). Sampling data for this stream are presented in Table V-25 (page 5121).

MAGNESIUM RECOVERY AREA VENT WET AIR POLLUTION CONTROL

Air from the reduction area ventilation system is routed through a wet scrubbing system before being released to the atmosphere. The blowdown from this scrubbing system is discharged as a wastewater stream. Water use and discharge rates for magnesium recovery area vent wet air pollution control are presented in Table V-13 (page 5115).

ZIRCONIUM CHIP CRUSHING WET AIR POLLUTION CONTROL

The zirconium cake formed by reduction is removed from the reduction container and crushed. The water use and discharge rates for zirconium chip crushing wet air pollution control are listed in Table V-14 (page 5115).

ACID LEACHATE FROM ZIRCONIUM METAL PRODUCTION

Purification of the zirconium or hafnium chips to remove the remaining impurities can be accomplished either by vacuum distillation or by leaching. Vacuum distillation does not result in the production of a wastewater stream. Leaching with hydrochloric or acetic acid produces a wastewater stream. The water use and discharge rates for acid leachate from zirconium metal production are listed in Table V-15 (page 5116). Sampling data for this wastewater are presented in Table V-26 (page 5121).

ACID LEACHATE FROM ZIRCONIUM ALLOY PRODUCTION

Zirconium-nickel alloys purified by acid leaching produce a waste stream similar in pollutant concentrations, although with different flow rates, to acid leachate from zirconium metal production. Water use and discharge rates for acid leachate from zirconium alloy production are presented in Table V-16 (page 5117). The sampling data for this stream are presented in Table V-26(page 5121).

LEACHING RINSE WATER FROM ZIRCONIUM METAL PRODUCTION

After leaching with acid to remove impurities, the zirconium metal chips are rinsed with water, dried, and packaged for sale. The rinse water is discharged as a wastweater. Table V-17 (page

5118) lists the water use and discharge rates for this wastewater stream. Sampling data for leaching rinse water are presented in Table V-27 (page 5121).

LEACHING RINSE WATER FROM ZIRCONIUM ALLOY PRODUCTION

Zirconium-nickel alloys purified by acid leaching and rinsing with water produce a waste stream similar in pollutant concentrations although with different flow rates to leaching rinse water from zirconium metal production. Water use and discharge rates for leaching rinse water from zirconium alloy production are presented in Table V-18 (page 5119). Sampling data for this waste stream are presented in Table V-27 (page 5121).

Table V-1

WATER USE AND DISCHARGE RATES FOR
SAND DRYING WET AIR POLLUTION CONTROL

(l/kkg of zirconium dioxide and hafnium dioxide produced)

Plant Code	Percent Recycle	Production Normalized Water Use	Production Normalized Discharge Flow
1044	0	568	568

Table V-2

WATER USE AND DISCHARGE RATES FOR
SAND CHLORINATION OFF-GAS WET AIR POLLUTION CONTROL

(l/kkg of zirconium dioxide and hafnium dioxide produced)

Plant Code	Percent Recycle	Production Normalized Water Use	Production Normalized Discharge Flow
1044	93	621,030	43,470
1074	NR	NR	16,540

NR = data not reported in dcp.

Table V-3

WATER USE AND DISCHARGE RATES FOR
SAND CHLORINATION AREA-VENT WET AIR POLLUTION CONTROL

(l/kkg of zirconium dioxide and hafnium dioxide produced)

Plant Code	Percent Recycle	Production Normalized Water Use	Production Normalized Discharge Flow
1044	96	213,100	8,524

Table V-4

WATER USE AND DISCHARGE RATES FOR
$SiCl_4$ PURIFICATION WET AIR POLLUTION CONTROL

(l/kkg of zirconium dioxide and hafnium dioxide produced)

Plant Code	Percent Recycle	Production Normalized Water Use	Production Normalized Discharge Flow
1044	96	187,450	7,498

Table V-5

WATER USE AND DISCHARGE RATES FOR
FEED MAKEUP WET AIR POLLUTION CONTROL

(l/kkg of zirconium dioxide and hafnium dioxide produced)

Plant Code	Percent Recycle	Production Normalized Water Use	Production Normalized Discharge Flow
1044	92	71,0?0	5,683
1074	100*	NR	0

*One hundred percent reuse in plant processes.

NR = data not reported in dcp.

Table V-6

WATER USE AND DISCHARGE RATES FOR
IRON EXTRACTION (MIBK) STEAM STRIPPER BOTTOMS

(l/kkg of zirconium dioxide and hafnium dioxide produced)

Plant Code	Percent Recycle	Production Normalized Water Use	Production Normalized Discharge Flow
1044	0	1,184	1,184
1074	0	3,303	3,303

Table V-7

WATER USE AND DISCHARGE RATES FOR
ZIRCONIUM FILTRATE

(l/kkg of zirconium dioxide and hafnium dioxide produced)

Plant Code	Percent Recycle	Production Normalized Water Use	Production Normalized Discharge Flow
1044	0	39,940	39,9-0
1074	0	37.640	37,640

Table V-8

WATER USE AND DISCHARGE RATES FOR
HAFNIUM FILTRATE

(l/kkg of zirconium dioxide and hafnium dioxide produced)

Plant Code	Percent Recycle	Production Normalized Water Use	Production Normalized Discharge Flow
1044	100*	NR	0
1074	100*	NR	0

NR = data not reported in dcp.

Table V-9

WATER USE AND DISCHARGE RATES FOR
CALCINING CAUSTIC WET AIR POLLUTION CONTROL

(l/kkg of zirconium dioxide and hafnium dioxide produced)

Plant Code	Percent Recycle	Production Normalized Water Use	Production Normalized Discharge Flow
1044	90	89,970	8,997
1074	NR	NR	1,539

NR = data not reported in dcp.

Table V-10

WATER USE AND DISCHARGE RATES FOR
PURE CHLORINATION WET AIR POLLUTION CONTROL

(l/kkg of zirconium and hafnium produced)

Plant Code	Percent Recycle	Production Normalized Water Use	Production Normalized Discharge Flow
1044	97	1,277,233	38,317
1074	NR	NR	NR

NR = data not reported in dcp.

Table V-11

WATER USE AND DISCHARGE RATES FOR
REDUCTION AREA-VENT WET AIR POLLUTION CONTROL

(l/kkg of zirconium and hafnium produced)

Plant Code	Percent Recycle	Production Normalized Water Use	Production Normalized Discharge Flow
1044	97	122,867	3,686

Table V-12

WATER USE AND DISCHARGE RATES FOR
MAGNESIUM RECOVERY OFF-GAS WET AIR POLLUTION CONTROL

(l/kkg of zirconium and hafnium produced)

Plant Code	Percent Recycle	Production Normalized Water Use	Production Normalized Discharge Flow
1044	96	518,325	20,733
1074	NR	NR	NR

NR = data not reported in dcp.

Table V-13

WATER USE AND DISCHARGE RATES FOR
MAGNESIUM RECOVERY AREA-VENT WET AIR POLLUTION CONTROL

(l/kkg of zirconium and hafnium produced)

Plant Code	Percent Recycle	Production Normalized Water Use	Production Normalized Discharge Flow
1044	96	287,950	11,518

Table V-14

WATER USE AND DISCHARGE RATES FOR
ZIRCONIUM CHIP CRUSHING WET AIR POLLUTION CONTROL

(l/kkg of zirconium and hafnium produced)

Plant Code	Percent Recycle	Production Normalized Water Use	Production Normalized Discharge Flow
1058	100	NR	0

NR = data not reported in dcp.

Table V-15

WATER USE AND DISCHARGE RATES FOR
ACID LEACHATE FROM ZIRCONIUM METAL PRODUCTION

(l/kkg of pure zirconium produced)

Plant Code	Percent Recycle	Production Normalized Water Use	Production Normalized Discharge Flow
1058	NR	NR	29,465

NR = data not reported in dcp.

Table V-16

WATER USE AND DISCHARGE RATES FOR
ACID LEACHATE FROM ZIRCONIUM ALLOY PRODUCTION

(l/kkg of zirconium contained in alloys)

Plant Code	Percent Recycle	Production Normalized Water Use	Production Normalized Discharge Flow
1058	NR	NR	12,617[a]
1058	NR	NR	18,925[b]

NR = data not reported in dcp.

[a]Flow for production of ZrNi (70 percent) alloys.

[b]Flow for production of ZrNi (30 percent) alloys.

Table V-17

WATER USE AND DISCHARGE RATES FOR
LEACHING RINSE WASTE FROM
ZIRCONIUM METAL PRODUCTION

(l/kkg of pure zirconium produced)

Plant Code	Percent Recycle	Production Normalized Water Use	Production Normalized Discharge Flow
1058	NR	NR	58,930

NR = data not reported in dcp.

Table V-18

WATER USE AND DISCHARGE RATES FOR
LEACHING RINSE WASTE FROM
ZIRCONIUM ALLOY PRODUCTION

(l/kkg of zirconium contained in alloys)

Plant Code	Percent Recycle	Production Normalized Water Use	Production Normalized Discharge Flow
1058	NR	NR	632[a]
1058	NR	NR	946[b]

NR = data not reported in dcp.

[a]Flow for production of ZrNi (70 percent) alloys.

[b]Flow for production of ZrNi (30 percent) alloys.

TABLE V-19

PRIMARY ZIRCONIUM AND HAFNIUM SAMPLING DATA
$SiCl_4$ PURIFICATION WET AIR POLLUTION CONTROL
RAW WASTEWATER

These data are not presented here because they have been claimed to be confidential.

TABLE V-20

PRIMARY ZIRCONIUM AND HAFNIUM SAMPLING DATA
FEED MAKEUP WET AIR POLLUTION CONTROL
RAW WASTEWATER

These data are not presented here because they have been claimed to be confidential.

TABLE V-21

PRIMARY ZIRCONIUM AND HAFNIUM SAMPLING DATA
IRON EXTRACTION (MIBK) STEAM STRIPPER BOTTOMS
RAW WASTEWATER

These data are not presented here because they have been claimed to be confidential.

TABLE V-22

PRIMARY ZIRCONIUM AND HAFNIUM SAMPLING DATA
ZIRCONIUM FILTRATE
RAW WASTEWATER

These data are not presented here because they have been claimed to be confidential.

TABLE V-23

PRIMARY ZIRCONIUM AND HAFNIUM SAMPLING DATA
HAFNIUM FILTRATE
RAW WASTEWATER

These data are not presented here because they have been claimed to be confidential.

TABLE V-24

PRIMARY ZIRCONIUM AND HAFNIUM SAMPLING DATA
CALCINING WET AIR POLLUTION CONTROL
RAW WASTEWATER

These data are not presented here because they have been claimed to be confidential.

TABLE V-25

PRIMARY ZIRCONIUM AND HAFNIUM SAMPLING DATA
MAGNESIUM ZIRCONIUM WET AIR POLLUTION CONTROL
RAW WASTEWATER

These data are not presented here because they have been claimed to be confidential.

TABLE V-26

PRIMARY ZIRCONIUM AND HAFNIUM SAMPLING DATA
ACID LEACHATE WASTE
RAW WASTEWATER

These data are not presented here because they have been claimed to be confidential.

TABLE V-27

PRIMARY ZIRCONIUM AND HAFNIUM SAMPLING DATA
LEACHING RINSE WASTE
RAW WASTEWATER

These data are not presented here because they have been claimed to be confidential.

Table V-28

PRIMARY ZIRCONIUM AND HAFNIUM SAMPLING DATA
TREATED EFFLUENT

Pollutant	Stream Code	Sample Type†	Concentrations (mg/l) Source	Day 1	Day 2	Day 3
Toxic Pollutants						
1. acenaphthene	227	1		ND	ND	ND
2. acrolein	127	1		ND	ND	ND
	227	1		ND	ND	ND
3. acrylonitrile	127	1		ND	ND	ND
	227	1		ND	ND	ND
4. benzene	127	1		ND	ND	ND
	227	1		ND	ND	ND
5. benzidine	227	1		ND	ND	ND
6. carbon tetrachloride	127	1		ND	ND	ND
	227	1		ND	ND	ND
7. chlorobenzene	127	1		ND	ND	ND
	227	1		ND	ND	ND
8. 1,2,4-trichlorobenzene	227	1		ND	ND	ND
9. hexachlorobenzene	227	1		ND	ND	ND
10. 1,2-dichloroethane	127	1		ND	ND	ND
	227	1		ND	ND	ND
11. 1,1,1-trichloroethane	127	1		0.340	0.650	0.730
	227	1		ND	ND	ND

Table V-28 (Continued)

PRIMARY ZIRCONIUM AND HAFNIUM SAMPLING DATA
TREATED EFFLUENT

Pollutant	Stream Code	Sample Type†	Concentrations (mg/l) Source	Day 1	Day 2	Day 3
Toxic Pollutants (Continued)						
12. hexachloroethane	127	6		0.011	0.090	
	227	1		ND	ND	ND
13. 1,1-dichloroethane	127	1		ND	ND	0.021
	227	1		ND	ND	ND
14. 1,1,2-trichloroethane	127	1		ND	ND	ND
	227	1		ND	ND	ND
15. 1,1,2,2-tetrachloroethane	127	1		0.003	ND	ND
	227	1		ND	ND	ND
16. chloroethane	127	1		ND	ND	ND
	227	1		ND	ND	ND
17. bis(chloromethyl)ether	227	1		ND	ND	ND
18. bis(2-chloroethyl)ether	227	1		ND	ND	ND
19. 2-chloroethyl vinyl ether	227	1		ND	ND	ND
20. 2-chloronaphthalene	227	1		ND	ND	ND
21. 2,4,6-trichlorophenol	127	6		ND	ND	ND
	227	1		ND	ND	ND
22. p-chloro-m-cresol	127	6		ND	ND	ND
	227	1		ND	ND	ND

Table V-28 (Continued)

PRIMARY ZIRCONIUM AND HAFNIUM SAMPLING DATA
TREATED EFFLUENT

Pollutant	Stream Code	Sample Type†	Concentrations (mg/l) Source	Day 1	Day 2	Day 3
Toxic Pollutants (Continued)						
23. chloroform	127	1		0.009	0.015	0.097
	227	1		*	0.010	0.020
24. 2-chlorophenol	127	6		ND	ND	ND
	227	1		ND	ND	ND
25. 1,2-dichlorobenzene	227	1		ND	ND	ND
26. 1,3-dichlorobenzene	227	1		ND	ND	ND
27. 1,4-dichlorobenzene	227	1		ND	ND	ND
28. 3,3'-dichlorobenzidine	227	1		ND	ND	ND
29. 1,1-dichloroethylene	127	1		ND	ND	ND
	227	1		ND	ND	ND
30. 1,2-trans-dichloroethylene	127	1		ND	ND	ND
	227	1		ND	ND	ND
31. 2,4-dichlorophenol	127	6		ND	ND	ND
	227	1		ND	ND	ND
32. 1,2-dichloropropane	127	1		ND	ND	ND
	227	1		ND	ND	ND
33. 1,3-dichloropropene	127	1		ND	ND	ND
	227	1		ND	ND	ND

Table V-28 (Continued)

PRIMARY ZIRCONIUM AND HAFNIUM SAMPLING DATA
TREATED EFFLUENT

Pollutant	Stream Code	Sample Type†	Concentrations (mg/l) Source	Day 1	Day 2	Day 3
Toxic Pollutants (Continued)						
34. 2,4-dimethylphenol	127	6		ND	ND	ND
	227	1		ND	ND	ND
35. 2,4-dinitrotoluene	227	1		ND	ND	ND
36. 2,6-dinitrotoluene	227	1		ND	ND	ND
37. 1,2-diphenylhydrazine	227	1		ND	ND	ND
38. ethylbenzene	127	1		ND	ND	ND
	227	1		ND	ND	ND
39. fluoranthene	227	1		ND	ND	ND
40. 4-chlorophenyl phenyl ether	227	1		ND	ND	ND
41. 4-bromophenyl phenyl ether	227	1		ND	ND	ND
42. bis(2-chloroisopropyl)ether	227	1		ND	ND	ND
43. bis(2-chloroethoxy)methane	227	1		ND	ND	ND
44. methylene chloride	127	1		ND	0.120	0.075
	227	1		0.040	0.020	0.060
45. methyl chloride (chloromethane)	127	1		ND	ND	ND
	227	1		ND	ND	ND

Table V-28 (Continued)

PRIMARY ZIRCONIUM AND HAFNIUM SAMPLING DATA
TREATED EFFLUENT

Pollutant	Stream Code	Sample Type†	Concentrations (mg/l) Source	Day 1	Day 2	Day 3
Toxic Pollutants (Continued)						
46. methyl bromide (bromomethane)	127	1		ND	ND	ND
	227	1		ND	ND	ND
47. bromoform (tribromomethane)	127	1		ND	ND	ND
	227	1		ND	ND	ND
48. dichlorobromomethane	127	1		ND	0.001	0.003
	227	1		ND	ND	*
49. trichlorofluoromethane	127	1		ND	ND	ND
	227	1		ND	ND	ND
50. dichlorodifluoromethane	127	1		ND	ND	ND
	227	1		ND	ND	ND
51. chlorodibromomethane	127	1		ND	ND	ND
	227	1		ND	ND	*
52. hexachlorobutadiene	227	1		ND	ND	ND
53. hexachlorocyclopentadiene	227	1		ND	ND	ND
54. isophorone	227	1		ND	ND	ND
55. naphthalene	127	6			0.015	
	227	1		ND	ND	ND

Table V-28 (Continued)

PRIMARY ZIRCONIUM AND HAFNIUM SAMPLING DATA
TREATED EFFLUENT

Pollutant	Stream Code	Sample Type†	Concentrations (mg/l) Source	Day 1	Day 2	Day 3
Toxic Pollutants (Continued)						
56. nitrobenzene	227	1		ND	ND	ND
57. 2-nitrophenol	127	6		ND	ND	ND
	227	1		ND	ND	ND
58. 4-nitrophenol	127	6		ND	ND	ND
	227	1		ND	ND	ND
59. 2,4-dinitrophenol	127	6		ND	ND	ND
	227	1		ND	ND	ND
60. 4,6-dinitro-o-cresol	127	6		ND	ND	ND
	227	1		ND	ND	ND
61. N-nitrosodimethylamine	227	1		ND	ND	ND
62. N-nitrosodiphenylamine	227	1		ND	ND	ND
63. N-nitrosodi-n-propylamine	227	1		ND	ND	ND
64. pentachlorophenol	127	6		ND	ND	ND
	227	1		ND	ND	ND
65. phenol	127	6		ND	ND	ND
	227	1		ND	*	*
66. bis(2-ethylhexyl) phthalate	227	1		*	*	0.020

Table V-28 (Continued)

PRIMARY ZIRCONIUM AND HAFNIUM SAMPLING DATA
TREATED EFFLUENT

Pollutant	Stream Code	Sample Type†	Concentrations (mg/l) Source	Day 1	Day 2	Day 3
Toxic Pollutants (Continued)						
67. butyl benzyl phthalate	227	1		ND	ND	ND
68. di-n-butyl phthalate	227	1		*	*	*
69. di-n-octyl phthalate	227	1		ND	ND	ND
70. diethyl phthalate	227	1		*	*	*
71. dimethyl phthalate	227	1		ND	ND	ND
72. benzo(a)anthracene	227	1		ND	ND	ND
73. benzo(a)pyrene	227	1		ND	ND	ND
74. benzo(b)fluoranthene	227	1		ND	ND	ND
75. benzo(k)fluoranthane	227	1		ND	ND	ND
76. chrysene	227	1		ND	ND	ND
77. acenaphthylene	227	1		ND	ND	ND
78. anthracene (a)	227	1		ND	ND	ND
79. benzo(ghi)perylene	227	1		ND	ND	ND
80. fluorene	227	1		ND	ND	ND

Table V-28 (Continued)

PRIMARY ZIRCONIUM AND HAFNIUM SAMPLING DATA
TREATED EFFLUENT

Pollutant	Stream Code	Sample Type†	Concentrations (mg/l) Source	Day 1	Day 2	Day 3
Toxic Pollutants (Continued)						
81. phenanthrene (a)	227	1		ND	ND	ND
82. dibenzo(a,h)anthracene	227	1		ND	ND	ND
83. indeno(1,2,3-c,d)pyrene	227	1		ND	ND	ND
84. pyrene	227	1		ND	ND	ND
85. tetrachloroethylene	127	1		0.028	ND	0.006
	227	1		ND	ND	ND
86. toluene	127	1		ND	ND	ND
	227	1		*	*	ND
87. trichloroethylene	127	1		0.004	ND	0.005
	227	1		*	ND	ND
88. vinyl chloride (chloroethylene)	127	1		ND	ND	ND
	227	1		ND	ND	ND
89. aldrin	227	1		ND	ND	ND
90. dieldrin	227	1		ND	ND	ND
91. chlordane	227	1		ND	ND	ND
92. 4,4'-DDT	227	1		ND	ND	ND

Table V-28 (Continued)

PRIMARY ZIRCONIUM AND HAFNIUM SAMPLING DATA
TREATED EFFLUENT

Pollutant	Stream Code	Sample Type†	Concentrations (mg/l) Source	Day 1	Day 2	Day 3
Toxic Pollutants (Continued)						
93. 4,4'-DDE	227	1		ND	ND	ND
94. 4,4'-DDD	227	1		ND	ND	ND
95. alpha-endosulfan	227	1		ND	ND	ND
96. beta-endosulfan	227	1		ND	ND	ND
97. endosulfan sulfate	227	1		ND	ND	ND
98. endrin	227	1		ND	ND	ND
99. endrin aldehyde	227	1		ND	ND	ND
100. heptachlor	227	1		ND	ND	ND
101. heptachlor epoxide	227	1		ND	ND	ND
102. alpha-BHC	227	1		ND	ND	ND
103. beta-BHC	227	1		ND	ND	ND
104. gamma-BHC	227	1		ND	ND	ND
105. delta-BHC	227	1		ND	ND	ND

Table V-28 (Continued)

PRIMARY ZIRCONIUM AND HAFNIUM SAMPLING DATA
TREATED EFFLUENT

Pollutant		Stream Code	Sample Type†	Concentrations (mg/l) Source	Day 1	Day 2	Day 3
Toxic Pollutants (Continued)							
106. PCB-1242	(b)	227	1		ND	ND	ND
107. PCB-1242	(b)	227	1		ND	ND	ND
108. PCB-1242	(b)	227	1		ND	ND	ND
109. PCB-1242	(c)	227	1		ND	ND	ND
110. PCB-1242	(c)	227	1		ND	ND	ND
111. PCB-1242	(c)	227	1		ND	ND	ND
112. PCB-1242	(c)	227	1		ND	ND	ND
113. toxaphene		227	1		ND	ND	ND
114. antimony		127	6		ND		ND
		227	1		<0.003	<0.003	<0.003
115. arsenic		127	6		0.024		ND
		227	1		0.017	0.013	0.039
117. beryllium		127	6		ND		ND
		227	1		0.0004	<0.0002	<0.0002
118. cadmium		127	6		ND		ND
		227	1		0.090	0.070	0.060

Table V-28 (Continued)

PRIMARY ZIRCONIUM AND HAFNIUM SAMPLING DATA
TREATED EFFLUENT

Pollutant	Stream Code	Sample Type†	Concentrations (mg/l) Source	Day 1	Day 2	Day 3
Toxic Pollutants (Continued)						
119. chromium (total)	127	6		0.010		ND
	227	1		0.013	0.38	0.10
120. copper	127	6		0.012		0.028
	227	1		0.090	0.11	0.09
121. cyanide (total)	127	1		5.0	4.80	0.21
	227	1		0.007	0.021	0.023
122. lead	127	6		0.04		ND
	227	1		1.0	0.65	0.59
123. mercury	127	6		ND		0.0003
	227	1		<0.0002	<0.0002	<0.0002
124. nickel	127	6		1.10		0.34
	227	1		1.6	0.93	9.4
125. selenium	127	6		ND		ND
	227	1		0.019	0.019	<0.002
126. silver	127	6		ND		ND
	227	1		0.0004	0.0002	0.0009
127. thallium	127	6		ND		ND
	227	1		1.6	1.1	0.95

Table V-28 (Continued)

PRIMARY ZIRCONIUM AND HAFNIUM SAMPLING DATA
TREATED EFFLUENT

Pollutant	Stream Code	Sample Type†	Concentrations (mg/l) Source	Day 1	Day 2	Day 3
Toxic Pollutants (Continued)						
128. zinc	127	6		0.19		0.11
	227	1		0.11	0.090	0.080
Nonconventional Pollutants						
alkalinity	227	1		120	77	35
ammonia nitrogen	127	6		8.8	13	48
	227	1		6.1	6.7	8.1
calcium	227	1		350	360	390
fluoride	127	6		5.0	4.1	4.9
	227	1		0.24	0.44	2.2
magnesium	227	1		7,900	6,900	3,300
phenolics	127	1		0.003	0.006	0.240
	227	1		0.0003	0.040	0.023
total dissolved solids (TDS)	227	1		49,000	37,000	25,000
Conventional Pollutants						
oil and grease	127	1		2.3	0.65	2.4
	227	1		<1	<1	<1

Table V-28 (Continued)

PRIMARY ZIRCONIUM AND HAFNIUM SAMPLING DATA
TREATED EFFLUENT

Pollutant	Stream Code	Sample Type†	Concentrations (mg/l) Source	Day 1	Day 2	Day 3
Conventional Pollutants (Continued)						
total suspended solids (TSS)	127	6		2.0	10.0	1.0
	227	1		60	75	65
pH (standard units)	127	6		7.9	6.8	
	227	1		8.6	9.0	8.6
methyl isobutyl ketone (MIBK)	127			0.910	0.150	1.200

†Sample Type Code: 1 - One-time grab
6 - 24-hour automatic composite

*Less than 0.01 mg/l.

(a), (b), (c) Reported together.

SECTION VI

SELECTION OF POLLUTANT PARAMETERS

Section V of this supplement presented data from primary zirconium and hafnium plant sampling visits and subsequent chemical analyses. This section examines that data and discusses the selection or exclusion of pollutants for potential limitation.

Each pollutant selected for potential limitation is discussed in Section VI of the General Development Document. That discussion provides information concerning the origin of each pollutant (i.e., whether it is a naturally occurring substance, processed metal, or a manufactured compound); general physical properties and the form of the pollutant; toxic effects of the pollutant in humans and other animals; and behavior of the pollutant in POTW at the concentrations expected in industrial discharges.

The discussion that follows describes the analysis that was performed to select or exclude priority pollutants for further consideration for limitations and standards. Also, conventional and nonconventional pollutants will be selected for limitation. Pollutants will be selected for further consideration if they are present in concentrations treatable by the technologies considered in this analysis. The treatable concentrations used for the priority metals were the long-term performance values achievable by chemical precipitation, sedimentation, and filtration. The treatable concentrations for the priority organics were the long-term performance values achievable by carbon adsorption.

CONVENTIONAL AND NONCONVENTIONAL POLLUTANT PARAMETERS

As part of this study, the Agency examined samples for two conventional pollutant parameters (total suspended solids and pH) and the nonconventional pollutant parameters ammonia, hafnium, radium 226 and zirconium. At proposal, the Agency had selected radium 226 for limitation in this subcategory. On March 18, 1985, the Agency published a notice of data availability which stated that the Agency was also considering regulating the nonconventional metals hafnium and zirconium. For promulgation, the Agency has decided not to regulate hafnium, radium 226, or zirconium because these pollutants will be effectively controlled by the limitations developed for the selected priority metal pollutants.

CONVENTIONAL AND NONCONVENTIONAL POLLUTANT PARAMETERS SELECTED

The conventional and nonconventional pollutants or pollutant parameters selected for limitation in this subcategory are:

ammonia
total suspended solids (TSS)
pH

Ammonia was analyzed for in 13 samples. Quantifiable concentrations ranged from 0.035 to 2800 mg/l. The only treatable concentration (2800 mg/l) was observed in the iron extraction (MIBK) steam stripper bottoms. Ammonia is expected to be present in this stream because of the ammonium thiocyanate raw material used in the extraction process. In addition, methods used to remove toxic metals do not effectively remove ammonia. For these reasons, ammonia is selected for limitation in this subcategory.

Total suspended solids (TSS) concentrations in 12 samples ranged from less than 0.5 mg/l to 1,655 mg/l. Eleven of the observed concentrations are greater than the 2.6 mg/l concentration considered achievable by identified treatment technology. Most of the methods used to remove toxic metals do so by converting these metals to precipitates. Meeting a limitation on total suspended solids ensures that sedimentation to remove precipitated toxic metals has been effective. For these reasons, total suspended solids are selected for limitation.

The 15 pH values observed ranged from 0.5 to 9.4. Fourteen of the observed values ranging from 0.5-6.8 are outside the 7.5 10.0 range considered desirable for discharge to receiving waters, with ten of these 14 values equal to or less than 2.2. Effective removal of toxic metals by precipitation requires careful control of pH. Therefore, pH is selected for limitation in this subcategory.

Radium - 226 was analyzed for in 4 raw wastewater samples collected during a post-proposal self-sampling effort. The concentration of radium - 226 in 3 of the 4 samples was less than the concentration considered achievable by identified treatment technology 4.13 picouries per liter. These 3 concentrations were 0.12 p Ci/l, 0.22 p Ci/l, and 0.90 p Ci/l. The one treatable concentration, 81 p Ci/l, was detected in the zirconium filtrate stream. Because radium - 226 was not detected above treatable concentrations in 3 of 4 raw wastewater samples, and because not much removal can be expected with treatment, radium - 226 is not selected for limitation in this subcategory.

TOXIC PRIORITY POLLUTANTS

The frequency of occurrence of the toxic pollutants in the wastewater samples taken is presented in Table VI-1 (page 5141). These data provide the basis for the categorization of specific

pollutants, as discussed below. Table VI-1 is based on the raw wastewater data from streams 105, 108, 110, 112, 114, 116, 120, 223, and 225 (see Section V). Treatment plant and source water samples were not considered in this frequency count.

TOXIC POLLUTANTS NEVER DETECTED

The toxic pollutants listed in Table VI-2 (page 5145) were not detected in any wastewater samples from this subcategory. Therefore, they are not selected for consideration in establishing regulations.

TOXIC POLLUTANTS NEVER FOUND ABOVE THEIR ANALYTICAL QUANTIFICATION CONCENTRATION

The toxic pollutants listed below were never found above their analytical quantification concentration in any raw wastewater samples from this subcategory; therefore, they are not selected for consideration in establishing regulations.

55. naphthalene
66. bis (2-ethylhexyl) phthalate
68. di-n-butyl phthalate
69. di-n-octyl phthalate
70. diethyl phthalate
114. antimony
126. silver

TOXIC POLLUTANTS PRESENT BELOW CONCENTRATIONS ACHIEVABLE BY TREATMENT

The pollutants listed below are not selected for consideration in establishing limitations because they were not found in any wastewater samples from this subcategory above concentrations considered achievable by existing or available treatment technologies. These pollutants are discussed individually following the list.

115. arsenic
117. beryllium
120. copper
123. mercury
125. selenium

Arsenic was detected above its analytical quantification limit in one of five samples. This sample's concentration was below that attainable by treatment (0.34 mg/l). Therefore, arsenic is not selected for limitation.

Beryllium was found at a concentration above its analytical quantification concentration in one of five samples. This sample was below the concentration considered achievable by identified treatment technology (0.20 mg/l). Therefore, beryllium is not selected for limitation.

Copper was detected above its analytical quantification limit in all of five. All of the values are below the 0.39 mg/l concentration considered achievable by treatment. Therefore, copper is not selected for limitation.

Mercury was detected above its analytical quantification limit in two of five samples. Both sample concentrations were below the concentration achievable by identified treatment technology (0.036 mg/l). Therefore, mercury is not selected for limitation.

Selenium was found at a concentration above its analytical quantification limit in one of five samples. This sample concentration was below that attainable by treatment (0.20 mg/l). Therefore, selenium is not selected for limitation.

TOXIC POLLUTANTS DETECTED IN A SMALL NUMBER OF SOURCES

The following pollutants were not selected for limitation on the basis that they are detectable in the effluent from only a small number of sources within the subcategory and are uniquely related to only those sources.

23. chloroform (trichloromethane)
44. methylene chloride (dichloromethane)
48. dichlorobromomethane
51. chlorodibromomethane
67. butyl benzyl phthalate

Although these pollutants were not selected for consideration in establishing nationwide limitations, it may be appropriate, on a case-by-case basis, for the local permitter to specify effluent limitations.

Chloroform (trichloromethane) was found above its treatable concentration of 0.010 mg/l in four of six raw wastewater samples with concentrations ranging from 0.03 to 0.33 mg/l. Chloroform is not attributable to specific materials or processes associated with zirconium and hafnium production. It is, however, a common solvent used in analytical laboratories, and the possibility of sample contamination exists. For these reasons, chloroform is not selected for limitation.

Methylene chloride (dichloromethane) was found above its treatable concentration of 0.010 mg/l in two of six raw wastewater samples with concentrations ranging from 0.01 to 0.16 mg/l. Methylene chloride is not attributable to specific materials or processes associated with zirconium and hafnium production. It is, however, a common solvent used in analytical laboratories, and the possibility of sample contamination exists. For these reasons, methylene chloride is not selected for limitation.

Dichlorobromomethane was detected above the concentration considered achievable by identified treatment technology (0.010

mg/l) in one of six raw wastewater samples. The observed treatable concentration is 0.020 mg/l. However, it was also detected in the corresponding source water sample at 0.050 mg/l. For this reason, dichlorobromomethane is not selected for limitation.

Chlorodibromomethane was found above the concentration achievable by treatment in one of six samples at a concentration of 0.090 mg/l. Because this pollutant is found at only one plant and is not attributable to specific materials or processes associated with zirconium and hafnium production, chlorodibromomethane is not selected for limitation.

Butyl benzyl phthalate was found above the achievable concentration of 0.010 mg/l in two raw wastewater samples. This compound is a plasticizer commonly used in laboratory and field sampling equipment and is not formed as a by-product in this subcategory. Therefore, butyl benzyl phthalate is not selected for limitation.

TOXIC POLLUTANTS SELECTED FOR FURTHER CONSIDERATION IN ESTABLISHING LIMITATIONS AND STANDARDS

The toxic pollutants listed below are selected for further consideration in establishing limitations and standards for this subcategory. The selected pollutants are each discussed following the list.

118. cadmium
119. chromium (Total)
121. cyanide (Total)
122. lead
124. nickel
127. thallium
128. zinc

Cadmium was found above its analytical quantification limit in four of five samples with concentrations ranging from 0.010 to 0.06 mg/l. One of those samples was above the 0.049 mg/l concentration achievable by treatment. Therefore, cadmium is selected for further consideration for limitation.

Chromium was found above its analytical quantification limit in all five samples with concentrations ranging from 0.029 to 0.491 mg/l. Four of those samples were above the 0.07 mg/l concentration achievable by treatment. Therefore, chromium is selected for further consideration for limitation.

Cyanide was found above its analytical quantification limit in nine of 11 samples with concentrations ranging from 0.063 to 16.0 mg/l. All nine of these samples were above the 0.047 mg/l concentration achievable by treatment. In addition, cyanide is expected to be present in the wastewater because of its use as a raw material. Therefore, cyanide is selected for further consideration for limitation.

Lead was found above its analytical quantification limit in three of five samples with concentrations ranging from 0.13 to 2.76 mg/l. All three of these samples were above the 0.08 mg/l concentration achievable by treatment. Therefore, lead is selected for further consideration for limitation.

Nickel was found above its analytical quantification limit in three of five samples with concentrations ranging from 0.45 to 4.46 mg/l. All three of these samples were above the 0.22 mg/l achievable by treatment. Therefore, nickel is selected for further consideration for limitation.

Thallium was found above its analytical quantification limit in one of five samples at a concentration of 1.7 mg/l. This sample was above the 0.23 mg/l concentration achievable by treatment. Therefore, thallium is selected for further consideration for limitation.

Zinc was found above its analytical quantification limit in three of five samples with concentrations ranging from 0.11 to 0.31 mg/l. Two of these samples were above the 0.23 mg/l concentration achievable by treatment. Therefore, zinc is selected for further consideration for limitation.

Table VI-i

FREQUENCY OF OCCURRENCE OF PRIORITY POLLUTANTS
PRIMARY ZIRCONIUM AND HAFNIUM SUBCATEGORY
RAW WASTEWATER

Pollutant	Analytical Quantification Concentration (mg/l)(a)	Treatable Concentration (mg/l)(b)	Number of Streams Analyzed	Number of Samples Analyzed	ND	Detected Below Quantification Concentration	Detected Below Treatable Concentration	Detected Above Treatable Concentration
1. acenaphthene	0.010	0.01	2	2	2			
2. acrolein	0.010	0.01	4	6	6			
3. acrylonitrile	0.010	0.01	4	6	6			
4. benzene	0.010	0.01	4	6	6			
5. benzidine	0.010	0.01	2	2	2			
6. carbon tetrachloride	0.010	0.01	4	6	6			
7. chlorobenzene	0.010	0.01	4	6	6			
8. 1,2,4-trichlorobenzene	0.010	0.01	2	2	2			
9. hexachlorobenzene	0.010	0.01	2	2	2			
10. 1,2-dichloroethane	0.010	0.01	4	6	6			
11. 1,1,1-trichloroethane	0.010	0.01	4	6	6			
12. hexachloroethane	0.010	0.01	2	2	2			
13. 1,1-dichloroethane	0.010	0.01	4	6	6			
14. 1,1,2-trichloroethane	0.010	0.01	4	6	6			
15. 1,1,2,2-tetrachloroethane	0.010	0.01	4	6	6			
16. chloroethane	0.010	0.01	4	6	6			
17. bis(chloromethyl) ether	0.010	0.01	2	2	2			
18. bis(2-chloroethyl) ether	0.010	0.01	2	2	2			
19. 2-chloroethyl vinyl ether	0.010	0.01	2	2	2			
20. 2-chloronaphthalene	0.010	0.01	2	2	2			
21. 2,4,6-trichlorophenol	0.010	0.01	4	5	5			
22. parachlorometa cresol	0.010	0.01	4	5	5			
23. chloroform	0.010	0.01	4	6	1	1		4
24. 2-chlorophenol	0.010	0.01	4	5	5			
25. 1,2-dichlorobenzene	0.010	0.01	2	2	2			
26. 1,3-dichlorobenzene	0.010	0.01	2	2	2			
27. 1,4-dichlorobenzene	0.010	0.01	2	2	2			
28. 3,3'-dichlorobenzidine	0.010	0.01	2	2	2			
29. 1,1-dichloroethylene	0.010	0.01	4	6	6			
30. 1,2-trans-dichloroethylene	0.010	0.01	4	6	6			
31. 2,4-dichlorophenol	0.010	0.01	4	5	5			
32. 1,2-dichloropropane	0.010	0.01	4	6	6			
33. 1,3-dichloropropylene	0.010	0.01	4	6	6			
34. 2,4-dimethylphenol	0.010	0.01	4	5	5			

Table VI-1 (Continued)

FREQUENCY OF OCCURRENCE OF PRIORITY POLLUTANTS
PRIMARY ZIRCONIUM AND HAFNIUM SUBCATEGORY
RAW WASTEWATER

Pollutant	Analytical Quantification Concentration (mg/l)(a)	Treatable Concentration (mg/l)(b)	Number of Streams Analyzed	Number of Samples Analyzed	ND	Detected Below Quantification Concentration	Below Treatable Concentration	Above Treatable Concentration
35. 2,4-dinitrotoluene	0.010	0.01	2	2	2			
36. 2,6-dinitrotoluene	0.010	0.01	2	2	2			
37. 1,2-diphenylhydrazine	0.010	0.01	2	2	2			
38. ethylbenzene	0.010	0.01	4	6	6			
39. fluoranthene	0.010	0.01	2	2	2			
40. 4-chlorophenyl phenyl ether	0.010	0.01	2	2	2			
41. 4-bromophenyl phenyl ether	0.010	0.01	2	2	2			
42. bis(2-chloroisopropyl) ether	0.010	0.01	2	2	2			
43. bis(2-chloroethoxy) methane	0.010	0.01	2	2	2			
44. methylene chloride	0.010	0.01	4	6	3	1		2
45. methyl chloride	0.010	0.01	4	6	6			
46. methyl bromide	0.010	0.01	4	6	6			
47. bromoform	0.010	0.01	4	6	6			
48. dichlorobromomethane	0.010	0.01	4	6	5			1
49. trichlorofluoromethane	0.010	0.01	4	6	6			
50. dichlorodifluoromethane	0.010	0.01	4	6	6			
51. chlorodibromomethane	0.010	0.01	4	6	4	1		1
52. hexachlorobutadiene	0.010	0.01	2	2	2			
53. hexachlorocyclopentadiene	0.010	0.01	2	2	2			
54. isophorone	0.010	0.01	2	2	2			
55. naphthalene	0.010	0.01	2	2	1	1		
56. nitrobenzene	0.010	0.01	2	2	2			
57. 2-nitrophenol	0.010	0.01	4	5	5			
58. 4-nitrophenol	0.010	0.01	4	5	5			
59. 2,4-dinitrophenol	0.010	0.01	4	5	5			
60. 4,6-dinitro-o-cresol	0.010	0.01	4	5	5			
61. N-nitrosodimethylamine	0.010	0.01	2	2	2			
62. N-nitrosodiphenylamine	0.010	0.01	2	2	2			
63. N-nitrosodi-n-propylamine	0.010	0.01	2	2	2			
64. pentachlorophenol	0.010	0.01	4	5	5			
65. phenol	0.010	0.01	4	5	5			
66. bis(2-ethylhexyl) phthalate	0.010	0.01	2	2	1	1		
67. butyl benzyl phthalate	0.010	0.01	2	2				2
68. di-n-butyl phthalate	0.010	0.01	2	2		2		

Table VI-1 (Continued)

FREQUENCY OF OCCURRENCE OF PRIORITY POLLUTANTS
PRIMARY ZIRCONIUM AND HAFNIUM SUBCATEGORY
RAW WASTEWATER

Pollutant	Analytical Quantification Concentration (mg/l)(a)	Treatable Concentration (mg/l)(b)	Number of Streams Analyzed	Number of Samples Analyzed	ND	Detected Below Quantification Concentration	Detected Below Treatable Concentration	Detected Above Treatable Concentration
69. di-n-octyl phthalate	0.010	0.01	2	2	1	1		
70. diethyl phthalate	0.010	0.01	2	2		2		
71. dimethyl phthalate	0.010	0.01	2	2	2			
72. benzo(a)anthracene	0.010	0.01	2	2	2			
73. benzo(a)pyrene	0.010	0.01	2	2	2			
74. 3,4-benzofluoranthene	0.010	0.01	2	2	2			
75. benzo(k)fluoranthene	0.010	0.01	2	2	2			
76. chrysene	0.010	0.01	2	2	2			
77. acenaphthylene	0.010	0.01	2	2	2			
78. anthracene (c)	0.010	0.01	2	2	2			
79. benzo(ghi)perylene	0.010	0.01	2	2	2			
80. fluorene	0.010	0.01	2	2	2			
81. phenanthrene (c)	0.010	0.01	2	2	2			
82. dibenzo(a,h)anthracene	0.010	0.01	2	2	2			
83. indeno(1,2,3-cd)pyrene	0.010	0.01	2	2	2			
84. pyrene	0.010	0.01	2	2	2			
85. tetrachloroethylene	0.010	0.01	4	6	6			
86. toluene	0.010	0.01	4	6	6			
87. trichloroethylene	0.010	0.01	4	6	6			
88. vinyl chloride	0.010	0.01	4	6	6			
89. aldrin	0.005	0.01	2	2	2			
90. dieldrin	0.005	0.01	2	2	2			
91. chlordane	0.005	0.01	2	2	2			
92. 4,4'-DDT	0.005	0.01	2	2	2			
93. 4,4'-DDE	0.005	0.01	2	2	2			
94. 4,4'-DDD	0.005	0.01	2	2	2			
95. alpha-endosulfan	0.005	0.01	2	2	2			
96. beta-endosulfan	0.005	0.01	2	2	2			
97. endosulfan sulfate	0.005	0.01	2	2	2			
98. endrin	0.005	0.01	2	2	2			
99. endrin aldehyde	0.005	0.01	2	2	2			
100. heptachlor	0.005	0.01	2	2	2			
101. heptachlor epoxide	0.005	0.01	2	2	2			
102. alpha-BHC	0.005	0.01	2	2	2			
103. beta-BHC	0.005	0.01	2	2	2			

Table VI-1 (Continued)

FREQUENCY OF OCCURRENCE OF PRIORITY POLLUTANTS
PRIMARY ZIRCONIUM AND HAFNIUM SUBCATEGORY
RAW WASTEWATER

Pollutant	Analytical Quantification Concentration (mg/l)(a)	Treatable Concentration (mg/l)(b)	Number of Streams Analyzed	Number of Samples Analyzed	ND	Detected Below Quantification Concentration	Detected Below Treatable Concentration	Detected Above Treatable Concentration
104. gamma-BHC	0.005	0.01	2	2	2			
105. delta-BHC	0.005	0.01	2	2	2			
106. PCB-1242 (d)	0.005	0.01	2	2	2			
107. PCB-1254 (d)	0.005	0.01	2	2	2			
108. PCB-1221 (d)	0.005	0.01	2	2	2			
109. PCB-1232 (e)	0.005	0.01	2	2	2			
110. PCB-1248 (e)	0.005	0.01	2	2	2			
111. PCB-1260 (e)	0.005	0.01	2	2	2			
112. PCB-1016 (e)	0.005	0.01	2	2	2			
113. toxaphene	0.005	0.01	2	2	2			
114. antimony	0.100	0.47	4	5		5		
115. arsenic	0.010	0.34	4	5		4	1	
116. asbestos	10 MFL	10 MFL	0					
117. beryllium	0.010	0.20	4	5		4	1	
118. cadmium	0.002	0.049	4	5		1	3	1
119. chromium	0.005	0.07	4	5			1	4
120. copper	0.009	0.39	4	5			5	
121. cyanide (f)	0.02	0.047	8	11		2		9
122. lead	0.020	0.08	4	5		2		3
123. mercury	0.0001	0.036	4	5		3	2	
124. nickel	0.005	0.22	4	5		2		3
125. selenium	0.01	0.20	4	5		4	1	
126. silver	0.02	0.07	4	5		5		
127. thallium	0.100	0.34	4	5		4		1
128. zinc	0.050	0.23	4	5		2	1	2
129. 2,3,7,8-tetrachlorodibenzo-p-dioxin (TCDD)			0					

(a) Analytical quantification concentration was reported with the data (see Section V).

(b) Treatable concentrations are based on perfonmance of chemical precipitation, sedimentation, and filtration.

(c), (d), (e) Reported together.

(f) Analytical quantification concentration for EPA Method 335.2, Total Cyanide Methods for Chemical Analysis of Water and Wastes, EPA 600/4-79-020, March 1979.

TABLE VI-2

TOXIC POLLUTANTS NEVER DETECTED

1. acenaphthene
2. acrolein
3. acrylonitrile
4. benzene
5. benzidene
6. carbon tetrachloride (tetrachloromethane)
7. chlorobenzene
8. 1,2,4-trichlorobenzene
9. hexachlorobenzene
10. 1,2-dichloroethane
11. 1,1,1-trichloroethane
12. hexachloroethane
13. 1,1-dichloroethane
14. 1,1,2-trichloroethane
15. 1,1,2,2-tetrachloroethane
16. chloroethane
17. bis (chloromethyl) ether (deleted)
18. bis (2-chloroethyl) ether
19. 2-chloroethyl vinyl ether (mixed)
20. 2-chloronaphthalene
21. 2,4,6-trichlorophenol
22. parachlorometa cresol
24. 2-chlorophenol
25. 1,2-dichlorobenzene
26. 1,3-dichlorobenzene
27. 1,4-dichlorobenzene
28. 3,3'-dichlorobenzidine
29. 1,1-dichloroethylene
30. 1,2-trans-dichloroethylene
31. 2,4-dichlorophenol
32. 1,2-dichloropropane
33. 1,2-dichloropropylene (1,3-dichloropropene)
34. 2,4-dimethylphenol
35. 2,4-dinitrotoluene
36. 2,6-dinitrotoluene
37. 1,2-diphenylhydrazine
38. ethylbenzene
39. fluoranthene
40. 4-chlorophenyl phenyl ether
41. 4-bromophenyl phenyl ether
42. bis (3-chloroisopropyl) ether
43. bis (2-choroethoxy) methane
45. methyl chloride (chloromethane)
46. methyl bromide (bromomethane)
47. bromoform (tribromomethane)

TABLE VI-2 (Continued)

TOXIC POLLUTANTS NEVER DETECTED

49. trichlorofluoromethane (deleted)
50. dichlorodifluoromethane (deleted)
52. hexachlorobutadiene
53. hexachlorocyclopentadiene
54. isophorone
56. nitrobenzene
57. 2-nitrophenol
58. 4-nitrophenol
59. 2,4-dinitrophenol
60. 4,6-dinitro-o-cresol
61. N-nitrosodimethylamine
62. N-nitrosodiphenylamine
63. N-nitrosodi-n-propylamine
64. pentachlorophenol
65. phenol
71. dimethyl phthalate
72. benzo (a)anthracene (1,2-benzanthracene)
73. benzo (a)pyrene (3,4-benzopyrene)
74. 3,4-benzofluoranthene
75. benzo(k)fluoranthane (11,12-benzofluoranthene)
76. chrysene
77. acenaphthylene
78. anthracene
79. benzo(ghi)perylene (1,11-benzoperylene)
80. fluorene
81. phenanthrene
82. dibenzo (a,h)anthracene (1,2,5,6-dibenzanthracene)
83. indeno (1,2,3-cd)pyrene (w,e,-o-phenylenepyrene)
84. pyrene
85. tetrachloroethylene
86. toluene
87. trichloroethylene
88. vinyl chloride (chloroethylene)
89. aldrin
90. dieldrin
91. chlordane (technical mixture and metabolites)
92. 4,4'-DDT
93. 4,4'-DDE9p,p'DDX)
94. 4,4'-DDD(p,p'TDE)
95. Alpha-endosulfan
96. Beta-endosulfan
97. endosulfan sulfate
98. endrin
99. endrin aldehyde

TABLE VI-2 (Continued)

TOXIC POLLUTANTS NEVER DETECTED

100. heptachlor
101. heptachlor epoxide
102. Alpha-BHC
103. Beta-BHC
104. Gamma-BHC (lindane)
105. Delta-BHC
106. PCB-1242 (Arochlor 1242)
107. PCB-1254 (Arochlor 1254)
108. PCB-1221 (Arochlor 1221)
109. PCB-1232 (Arochlor 1232)
110. PCB-1248 (Arochlor 1248)
111. PCB-1260 (Arochlor 1260)
112. PCB-1016 (Arochlor 1016)
113. toxaphene
116. asbestos (fibrous)
129. 2,3,7,8-tetrachlorodibenzo-p-dioxin (TCDD)

THIS PAGE INTENTIONALLY LEFT BLANK

SECTION VII

CONTROL AND TREATMENT TECHNOLOGIES

The preceding sections of this supplement discussed the sources, flows, and characteristics of the wastewaters generated in the primary zirconium and hafnium subcategory. This section presents a summary of the control and treatment technologies that are currently applied to each of the sources generating wastewater in this subcategory.

As discussed in Section V, wastewater associated with the primary zirconium and hafnium subcategory is characterized by the presence of the priority metal pollutants, ammonia, cyanide, and suspended solids. This analysis is supported by the raw (untreated) wastewater data presented for specific sources in Section V. Generally, these pollutants are present in each of the waste streams at treatable concentrations, and these wastewater streams are commonly combined for treatment. Construction of one wastewater treatment system for combined treatment allows plants to take advantage of economies of scale, and in some instances, to combine streams of differing alkalinity to reduce treatment chemical requirements. Two plants in this subcategory currently have combined treatment systems, one of which consists of chemical precipitation and sedimentation. Three options have been selected for consideration for BPT, BAT, NSPS and pretreatment in this subcategory, based on combined treatment of these compatible waste streams.

SAND DRYING WET AIR POLLUTION CONTROL

The principal raw material used in the primary zirconium and hafnium industry is the ore mineral zircon found in zircon sand. In the one plant which reports sand drying operations before sand chlorination, wet air pollution control is operated without recycle. This stream is discharged after chemical precipitation and sedimentation (lime and settle) treatment.

SAND CHLORINATION OFF-GAS WET AIR POLLUTION CONTROL

After zircon ore is chlorinated, crude zirconium-tetrachloride and silicon tetrachloride are separated and recovered from the off-gases using a series of condensers. Wet air pollution control equipment is used to remove residual chlorine gas and particulates from the condenser off-gases. One plant has achieved zero discharge of this wastewater stream using evaporation ponds. Other plants discharge this stream after dechlorination, chemical precipitation, and sedimentation. Extensive recycle of scrubber liquor is practiced.

SAND CHLORINATION AREA VENT WET AIR POLLUTION CONTROL

Ventilation vapors from the sand chlorination area are routed to wet air pollution control equipment before being released to the atmosphere. At the one plant that reports a separate waste stream for area-vent scrubbers, the wastewater generated is discharged after dechlorination, chemical precipitation, and sedimentation. That plant reported practicing 96 percent recycle this wastewater.

$SiCl_4$ PURIFICATION WET AIR POLLUTION CONTROL

Silicon tetrachloride purification requires wet air pollution control. That process practices 96 percent recycle of the scrubber water before discharging it. The existing treatment for this wastewater consists of chemical precipitation and sedimentation.

FEED MAKEUP WET AIR POLLUTION CONTROL

Feed makeup steps are intended to remove suspended solids from crude zirconium-hafnium tetrachloride . This process uses wet scrubbing systems to control emissions. A high rate of recycle and reuse (92 to 100 percent) of the feed makeup scrubber liquor is achieved prior to discharge. Chemical precipitation and sedimentation is practiced for this stream.

IRON EXTRACTION (MIBK) STEAM STRIPPER BOTTOMS

Methyl isobutyl ketone (MIBK) is recovered from the iron extraction wastewater stream using a steam stripper, from which the bottoms is discharged. When this steam is discharged it is treated by ammonia stream stripping, chemical precipitation, and sedimentation. No reuse or recycle of this wastewater is reported.

ZIRCONIUM FILTRATE

Separated zirconium is precipitated from solution and filtered before being sent to the calcining furnace. Recycle or reuses of this wastewater stream is not reported. When this wastewater is discharged, it is treated by ammonia stream stripping, chemical precipitation, and sedimentation.

HAFNIUM FILTRATE

Separated hafnium is precipitated from solution and filtered before being sent to the calcining furnace. The filtrate can be reused in the separation process to recover its zirconium content or disposed using evaporation ponds.

CALCINING CAUSTIC WET AIR POLLUTION CONTROL

Wet air pollution control systems are used to cleanse the off-gases from the calcining furnaces. A high rate (90 percent) of

recycle or reuse of the discharge from the water scrubbers in the separations process is achieved. When the blowdown from this operation is discharged it is treated by dechlorination, chemical precipitation, and sedimentation.

PURE CHLORINATION WET AIR POLLUTION CONTROL

Pure chlorination is similar to sand chlorination except that the chlorination of zirconium oxide and hafnium oxide is carried out in separate reactors at lower temperatures. The scrubbers used for reactor off-gases and area ventilation vapors discharge a wastewater stream. This stream may be recycled and the blowdown is treated by dechlorination, chemical precipitation, and sedimentation before being discharged.

REDUCTION AREA VENT WET AIR POLLUTION CONTROL

The plants that reduce zirconium and hafnium tetrachloride to metal use scrubbers for area ventilation vapors. The scrubber liquor is recycled before it is discharged after treatment by chemical precipitation and sedimentation.

MAGNESIUM RECOVERY OFF-GAS WET AIR POLLUTION CONTROL

Scrubbers, installed for air pollution control in the magnesium recovery area, discharge a wastewater which is characterized by treatable concentrations of magnesium and solids. The scrubber liquor may be recycled prior to treatment which consists of chemical precipitation and sedimentation followed by discharge.

MAGNESIUM RECOVERY AREA VENT WET AIR POLLUTION CONTROL

Ventilation air from the magnesium recovery area passes through a wet scrubber prior to being released to the atmosphere. The scrubber liquor is recycled prior to discharge and treatment consists of chemical precipitation and sedimentation.

ZIRCONIUM CHIP CRUSHING WET AIR POLLUTION CONTROL

The zirconium sponge formed by reduction is removed from the reduction container and crushed. Scrubbers, installed for air pollution control in the crushing operation generate a wastewater. Zero discharge of this wastewater is achieved by 100 percent recycle of the scrubber liquor.

ACID LEACHATE FROM ZIRCONIUM METAL OR FROM ZIRCONIUM ALLOY PRODUCTION

When zirconium metal and zirconium-nickel alloys are purified by leaching, the resulting leachate is not reused or recycled. Existing treatment for this wastewater stream consists of pH adjustment before discharge.

LEACHING RINSE WATER FROM ZIRCONIUM METAL OR ZIRCONIUM ALLOY PRODUCTION

After leaching with acid to remove impurities, the zirconium metal or zirconium alloy is rinsed with water, dried, and packaged for sale. The rinse water is not recycled or reused. Existing treatment for this stream consists of pH adjustment before discharge.

CONTROL AND TREATMENT OPTIONS

The Agency examined two control and treatment technology alternatives that are applicable to the primary zirconium and hafnium subcategory. The options selected for evaluation represent a combination of pretreatment technology applicable to individual waste streams, and end-of-pipe treatment technologies. The effectiveness of these treatment technologies is presented in Section VII of Vol. I and summarized there in Table VII-21 (page 250).

OPTION A

Option A for the primary zirconium and hafnium subcategory consists of ammonia steam stripping preliminary treatment applied to the combined zirconium filtrate and iron extraction (MIBK) steam stripper bottoms stream. cyanide precipitation preliminary treatment applied to $SiCl_4$ purification wet air pollution control, feed makeup wet air pollution control, acid leachate and ammonia steam stripper bottoms, and chemical precipitation and sedimentation of all of the waste streams. Chemical precipitation and sedimentation consists of the addition of lime or some other chemical to precipitate metals followed by gravity sedimentation for the removal of suspended solids, including the metal precipitates.

OPTION C

Option C for the primary zirconium and hafnium subcategory consists of all control and treatment requirements of Option B (preliminary treatment consisting of ammonia steam stripping and cyanide precipitation where required, chemical precipitation, sedimentation, plus multimedia filtration technology added at the end of the Option A treatment scheme. Multimedia filtration is used to remove suspended solids, including precipitates of metals, beyond the concentration attainable by gravity sedimentation. The filter suggested is of the gravity, mixed media type, although other filters, such as rapid sand filters or pressure filters, would perform satisfactorily.

SECTION VIII

COSTS, ENERGY, AND NONWATER QUALITY ASPECTS

This section presents a summary of compliance costs for the primary zirconium and hafnium subcategory and a description of the treatment options and subcategory-specific assumptions used to develop these estimates. Together with the estimated pollutant reduction performance presented in Section IX, X, XI, and XII of this supplement, these cost estimates provide a basis for evaluating each regulatory option. These cost estimates are also used in determining the probable economic impact of regulation on the subcategory at different pollutant discharge levels. In addition, this section addresses nonwater quality environmental impacts of wastewater treatment and control alternatives, including air pollution, solid wastes, and energy requirements, which are specific to the primary zirconium and hafnium subcategory.

TREATMENT OPTIONS FOR EXISTING SOURCES

As discussed in Section VII, two treatment options have been developed for existing primary zirconium and hafnium sources. The treatment schemes for each option are summarized below and schematically presented in Figures X-1 and X-2 (pages 5199 and 5200).

OPTION A

Option A consists of ammonia stream stripping and cyanide precipitation preliminary treatment where required, and chemical precipitation and sedimentation end-of-pipe technology.

OPTION C

Option C requires ammonia steam stripping and cyanide precipitation preliminary treatment where required, and end-of-pipe treatment technology consisting of chemical precipitation, sedimentation, and multimedia filtration.

COST METHODOLOGY

A detailed discussion of the methodology used to develop the compliance cost estimates is presented in Section VIII of Vol. I. Plant-by-plant compliance costs have been revised as necessary for the nonferrous metals manufacturing category and are documented in detail in the administrative record supporting this regulation. A comparison of the costs developed for direct dischargers for the proposed and promulgated rulemaking is presented in Table VIII-1 (page 5156).

Table VIII-2 (page 5156) presents the compliance cost estimates for indirect dischargers. The general assumptions used to develop compliance costs are presented in Section VIII Vol. I. Each subcategory also contains a unique set of wastewater streams requiring certain subcategory-specific assumptions to develop compliance costs. The major assumptions specific to the primary zirconium and hafnium subcategory are discussed briefly below.

(1) All chromium in the raw wastewater is assumed to be trivalent chromium; therefore, chromium reduction treatment is unnecessary.

(2) Sludge formed in the cyanide precipitation process was costed as disposed of as a hazardous waste.

ENERGY REQUIREMENTS

The methodology used for determining the energy requirements for the various options is discussed in Section VIII of the General Development Document. Energy requirements for Option A are estimated at 12,210,900 kwh/yr. Option C, which includes filtration, is estimated to increase energy consumption over Option B by approximately 1 percent. Further, the total energy requirement for Option C is approximately 10 percent of the estimated total plant energy usage. It is therefore concluded that the energy requirements of the treatment options considered will have no significant impact on total plant energy consumption.

SOLID WASTE

Sludge generated in the primary zirconium and hafnium subcategory is due to the precipitation of metal hydroxides and carbonates using lime or other chemicals. Sludges associated with the primary zirconium and hafnium subcategory will necessarily contain quantities of toxic metal pollutants. These sludges are not subject to regulation as hazardous wastes since wastes generated by primary smelters and refiners are currently exempt from regulation by Act of Congress (Resource Conservation and Recovery Act (RCRA), Section 3001(b)), as interpreted by EPA. If a small excess of lime is added during treatment, the Agency does not believe these sludges would be identified as hazardous under RCRA in any case. (Compliance costs include this amount of lime.) This judgment is based on the results of Extraction Procedure (EP) toxicity tests performed on similar sludges (toxic metal-bearing sludges) generated by other industries such as the iron and steel industry. A small amount of excess lime was added during treatment, and the sludges subsequently generated passed the toxicity test. See CFR 261.24. Thus, the Agency believes that the wastewater sludges will similarly not be EP toxic if the recommended technology is applied. The one exception to this j sludges generated by cyanide precipitation, which were treated hazardous throughout this study.

Although it is the Agency's view that solid wastes generated as a result of these guidelines are not expected to be hazardous, generators of these wastes must test the waste to determine if the wastes meet any of the characteristics of hazardous waste (see 40 CFR 262.11).

If these wastes should be identified or are listed as hazardous, they will come within the scope of RCRA's "cradle to grave" hazardous waste management program, requiring regulation from the point of generation to point of final disposition. EPA's generator standards would require generators of hazardous nonferrous metals manufacturing wastes to meet containerization, labeling, recordkeeping, and reporting requirements; if plants dispose of hazardous wastes off-site, they would have to prepare a manifest which would track the movement of the wastes from the generator's premises to a permitted off-site treatment, storage, or disposal facility. See 40 CFR 262.20, 45 FR 33142 (May 19, 1980), as amended at 45 FR 86973 (December 31, 1980). The transporter regulations require transporters of hazardous wastes to comply with the manifest system to assure that the wastes are delivered to a permitted facility. See 40 CFR 263.20, 45 FR 1980). Finally, RCRA regulations establish standards for hazardous waste treatment, storage, and disposal facilities allowed to receive such wastes. See 40 CFR part 464, 46 FR 2802 (January 12, 1981), and 47 FR 32274 (July 26, 1982).

Even if these wastes are not identified as hazardous, they still must be disposed of in compliance with the Subtitle D open dumping standards, implementing Section 4004 of RCRA. See 44 FR 53438 (September 13, 1979). The Agency has calculated as part of the costs for wastewater treatment the cost of hauling and disposing of these wastes.

It is estimated that 2,623 metric tons per year of sludge will be generated as a result of the promulgated BAT regulations for the primary zirconium and hafnium subcategory.

AIR POLLUTION

There is no reason to believe that any substantial air pollution problems will result from implementation of ammonia steam stripping, cyanide precipitation, chemical precipitation, sedimentation, and multimedia filtration. The ammonia steam stripping process yields an aqueous ammonia stream. The other technologies transfer pollutants to solid waste and are not likely to transfer pollutants to air.

Table VIII-1

COST OF COMPLIANCE FOR THE PRIMARY ZIRCONIUM
AND HAFNIUM SUBCATEGORY
DIRECT DISCHARGERS

These costs are not presented here because the data on which they are based have been claimed to be confidential.

SECTION IX

BEST PRACTICABLE CONTROL TECHNOLOGY CURRENTLY AVAILABLE

This section defines the effluent characteristics attainable through the application of best practicable control technology currently available (BPT). BPT reflects the existing performance by plants of various sizes, ages, and manufacturing processes within the primary zirconium and hafnium subcategory, as well as the established performance of the model BPT systems. Particular consideration is given to the treatment already in place at plants within the data base.

The factors considered in identifying BPT include the total cost of applying the technology in relation to the effluent reduction benefits from such application, the age of equipment and facilities involved, the manufacturing processes used, nonwater quality environmental impacts (including energy requirements), and other factors the Administrator considers appropriate. In general, the BPT level represents the average of the existing performances of plants of various ages, sizes, processes, or other common characteristics. Where existing performance is uniformly inadequate, BPT may be transferred from a different subcategory or category. Limitations based on transfer of technology are supported by a rationale concluding that the technology is, indeed, transferable, and a reasonable prediction that it will be capable of achieving the prescribed effluent limits. BPT focuses on end-of-pipe treatment rather than process changes or internal controls, except where such practices are common industry practice.

TECHNICAL APPROACH TO BPT

The Agency studied the primary zirconium and hafnium subcategory to identify the processes used, the wastewaters generated, and the treatment processes installed. Information was collected using data collection portfolios, and specific plants were sampled and the wastewaters analyzed. In making technical assessments of data, reviewing manufacturing processes, and assessing wastewater treatment technology options, both indirect and direct dischargers have been considered as a single group. An examination of plants and processes did not indicate any process differences based on the type of discharge, whether it be direct or indirect.

As explained in Section IV, the primary zirconium and hafnium subcategory has been subdivided into 18 potential wastewater sources. Since the water use, discharge rates, and pollutant characteristics of each of these wastewaters is potentially unique, effluent limitations will be developed for each of the 18 subdivisions.

For each of the subdivisions, a specific approach was followed for the development of BPT mass limitations. The first

requirement to calculate these limitations is to account for production and flow variability from plant to plant. Therefore, a unit of production or production normalizing parameter (PNP) was determined for each waste stream which could then be related to the flow from the process to determine a production normalized flow. Selection of the PNP for each process element is discussed in Section IV. Each plant within the subcategory was then analyzed to determine which subdivisions were present, the specific flow rates generated for each subdivision, and the specific production normalized flows for each subdivision. This analysis is discussed in detail in Section V. Nonprocess wastewaters such as rainfall runoff and noncontact cooling water are not considered in the analysis.

Production normalized flows were than analyzed to determine the flow to be used as part of the basis for BPT mass limitations. The selected flow (sometimes referred to as the BPT regulatory flow or BPT discharge rate) reflects the water use controls which are common practices within the category. The BPT regulatory flow is based on the average of all applicable data. Plants with normalized flows above the average may have to implement some method of flow reduction to achieve the BPT limitations.

The second requirement to calculate mass limitations is the set of concentrations that are achievable by application of the BPT level of treatment technology. Section VII discusses the various control and treatment technologies which are currently in place for each wastewater source. In most cases, the current control and treatment technologies consist of chemical precipitation and sedimentation (lime and settle) technology and a combination of reuse and recycle to reduce flow, along with ammonia steam stripping applied to streams with treatable concentrations of ammonia. Cyanide precipitation is applied to streams with treatable concentrations of free and complexed cyanide.

Using these regulatory flows and the achievable concentrations, the next step is to calculate mass loadings for each wastewater source or subdivision. This calculation was made on a stream-by-stream basis, primarily because plants in this subcategory may perform one or more of the operations in various combinations. The mass loadings (milligrams of pollutant per metric ton of production mg/kkg) were calculated by multiplying the BPT regulatory flow (l/kkg) by the concentration achievable by the BPT level of treatment technology (mg/l) for each pollutant parameter to be limited under BPT. These mass loadings are published in the Federal Register and in CFR Part 421 as the effluent limitations.

The mass loadings which are allowed under BPT for each plant will be the sum of the individual mass loadings for the various wastewater sources which are found at particular plants. Accordingly, all the wastewater generated within a plant may be combined for treatment in a single or common treatment system, but the effluent limitations for these combined wastewaters are based on the various wastewater sources which actually contribute

to the combined flow. This method accounts for the variety of combinations of wastewater sources and production processes which may be found at primary zirconium and hafnium plants.

The Agency usually establishes wastewater limitations in terms of mass rather than concentration. This approach prevents the use of dilution as a treatment method (except for controlling ph). The production normalized wastewater flow (l/kkg) is a link between the production operations and the effluent limitations. The pollutant discharge attributable to each operation can be calculated from the normalized flow and effluent concentration achievable by the treatment technology and summed to derive an appropriate limitation for each plant.

INDUSTRY COST AND POLLUTANT REDUCTION BENEFITS

In balancing costs in relation to effluent reduction benefits, EPA considers the volume and nature of existing discharges, the volume and nature of discharges expected after application of BPT, the general environmental effects of the pollutants, and the cost and economic impacts of the required pollution control level. The Act does not require or permit consideration of water quality problems attributable to particular point sources or industries, or water quality improvements in particular water quality bodies. Accordingly, water quality considerations were not the basis for selecting the proposed BPT.

The methodology for calculating pollutant reduction benefits and plant compliance costs is discussed in Section X. Table X-2 (page 5186) shows the pollutant reduction benefits for direct dischargers at each treatment option. Compliance costs for direct dischargers are presented in Table X-3 (page 5187).

BPT OPTION SELECTION

The technology basis for the proposed and promulgated BPT limitations is Option A, chemical precipitation and sedimentation technology to remove metals and solids from combined wastewaters and to control pH plus ammonia steam stripping and cyanide precipitation preliminary treatment of streams containing ammonia or cyanide. Chemical precipitation and sedimentation technology and ammonia steam stripping are already in-place at the one direct discharger in the subcategory. The pollutants specifically selected for regulation at BPT are chromium, cyanide, lead, nickel, ammonia, TSS, and pH. BPT is not promulgated for plants which only produce zirconium or zirconium-nickel alloys by magnesium reduction of ZrO_2, as discussed under BAT. The BPT treatment scheme is shown schematically in Figure IX-1 (page 5178).

The costs and pollutant removals data for the Subcategory are not presented here because the data on which they are based have been claimed to be confidential.

Ammonia steam stripping is demonstrated at six facilities in the nonferrous metals manufacturing category. These facilities are treating ammonia-bearing wastewaters associated with the production of primary tungsten, primary columbium and tantalum, primary molybdenum, secondary tungsten and cobalt, and primary zirconium and hafnium. EPA believes that performance data from the iron and steel manufacturing category provide a valid measure of this technology's performance on nonferrous metals manufacturing category wastewater because raw wastewater concentrations of ammonia are of the same order of magnitude in the respective raw wastewater matrices.

Chemical analysis data were collected of raw waste (treatment influent) and treated waste (treatment effluent) from one coke plant of the iron and steel manufacturing category. A contractor for EPA, using EPA sampling and chemical analysis protocols, collected six paired samples in a two-month period. These data are the data base for determining the effectiveness of ammonia steam stripping technology and are contained within the public record supporting this document. Ammonia treatment at this coke plant consisted of two steam stripping columns in series with steam injected countercurrently to the flow of the wastewater. A lime reactor for pH adjustment separated the two stripping columns.

The Agency has verified the proposed steam stripping performance values using steam stripping data collected at a primary zirconium and hafnium plant which has raw ammonia levels as high as any in the nonferrous metals manufacturing category. Data collected by the plant represent almost two years of daily operations, and support the long-term mean used to establish treatment effectiveness. In addition, data submitted by a primary columbium and tantalum facility support the ammonia treatment performance concentration.

We are transferring cyanide precipitation technology and performance to the primary zirconium and hafnium subcategory from coil coating plants. We believe the technology is transferable to these subcategories because the raw wastewater concentrations are of the same order of magnitude as those observed in coil coating wastewater. In that cyanide precipitation converts all cyanide species to complex cyanides and that precipitation of the complexed cyanides is solubility related, we believe that the technology will achieve identical effluent concentrations in both categories.

WASTEWATER DISCHARGE RATES

A BPT wastewater discharge rate is calculated for each subdivision based on the average of the flows of the existing plants, as determined from analysis of dcp. The discharge rate is used with the achievable treatment concentrations to determine BPT effluent limitations. Since the discharge rate may be different for each wastewater source, separate production normalized discharge rates for each of the 18 wastewater sources

are discussed below and summarized in Table IX-1 (page 5167). The discharge rates are normalized on a production basis by relating the amount of wastewater generated to the mass of metal produced by the process associated with the waste stream in question. These production normalizing parameters, or PNPs, are also listed in Table IX-1.

Section V of this document further describes the discharge flow rates and presents the water use and discharge flow rates by subdivision in Tables V-1 through V-18.

SAND DRYING WET AIR POLLUTION CONTROL

The BPT wastewater discharge allowance for sand drying wet air pollution control at proposal was 379 l/kkg (91 gal/ton) of zircon sand dried. Based on comments which the Agency received on the proposed rulemaking, it was decided that the mass of zirconium dioxide and hafnium dioxide produced is a more appropriate production normalizing parameter for this wastewater stream. The Agency also evaluated new flow and production data submitted after proposal with industry comments. The final BPT wastewater discharge rate for this subdivision is 568 l/kkg (136 gal/ton) of zirconium dioxide and hafnium dioxide produced. This rate is based on the rate reported by one plant which generates this wastewater stream. This rate is allocated to any plant drying zircon sand prior to chlorination, and practicing wet air pollution control of drier off-gases.

SAND CHLORINATION OFF-GAS WET AIR POLLUTION CONTROL

The BPT wastewater discharge allowance for sand chlorination off-gas wet air pollution control at proposal was 14,712 l/kkg (3,529 gal/ton) of crude $ZrCl_4$ produced. Based on comments which the Agency received on the proposed rulemaking, it was decided that the mass of zirconium dioxide and hafnium dioxide produced is a more appropriate production normalizing parameter for this wastewater stream. The Agency also evaluated new flow and production data submitted after proposal with industry comments. The promulgated BPT wastewater discharge rate for this subdivision is 43,470 l/kkg (10,418 gal/ton) of zirconium dioxide and hafnium dioxide produced. One plant reported sufficient information, including a 93 percent rate of recycle, to determine water use and discharge rates. This rate is allocated to any plant which chlorinates zircon sand and controls chlorinator off-gas emissions with a wet scrubber.

SAND CHLORINATION AREA VENT WET AIR POLLUTION CONTROL

The BPT wastewater discharge allowance for sand chlorination area vent wet air pollution control at proposal was 19,616 l/kkg (4,706 gal/ton) of crude $ZrCl_4$ produced. Based on comments which the Agency received on the proposed rulemaking, it was decided that the mass of zirconium dioxide and hafnium dioxide produced is a more appropriate production normalizing parameter for this wastewater stream. The Agency also evaluated new flow and

production data submitted after proposal with industry comments. The promulgated BPT wastewater discharge rate for this subdivision is 8,524 l/kkg (2,043 gal/ton) of zirconium dioxide and hafnium dioxide produced. The BPT flow rate is based on the rate reported which includes 96 percent recycle. This rate is allocated to any plant chlorinating zircon sand and controlling area ventilation emissions with a wet scrubbing system.

$SiCl_4$ PURIFICATION WET AIR POLLUTION CONTROL

The BPT wastewater discharge allowance for $SiCl_4$ purification wet air pollution control at proposal was 8,650 l/kkg (2,075 gal/ton) of $SiCl_4$ purified. Based on comments which the Agency received on the proposed rulemaking, it was decided that the mass of zirconium dioxide and hafnium dioxide produced is a more appropriate production normalizing parameter for this wastewater stream. The Agency also evaluated new flow and production data submitted after proposal with industry comments. The final BPT wastewater discharge rate for this subdivision is 7,498 l/kkg (1,797 gal/ton) of zirconium dioxide and hafnium dioxide produced. The BPT flow rate is based on the rates reported which include 96 percent recycle of scrubber liquor prior to discharge. This rate is allocated to any plant purifying $SiCl_4$ produced as a by-product of zircon sand chlorination, and controlling off-gases with a wet air pollution control device.

FEED MAKEUP WET AIR POLLUTION CONTROL

The BPT wastewater discharge allowance for feed makeup wet air pollution control at proposal was 6,334 l/kkg (1,519 gal/ton) of crude $ZrCl_4$ produced. Based on comments which the Agency received on the proposed rulemaking, it was decided that the mass of zirconium dioxide and hafnium dioxide produced is a more appropriate production normalizing parameter for this wastewater stream. The Agency also evaluated new flow and production data submitted after proposal with industry comments. The promulgated BPT wastewater discharge rate for this subdivision is 5,683 l/kkg (1,362 gal/ton) of zirconium dioxide and hafnium dioxide produced. One facility totally reuses this water in other plant processes. One other facility discharges this water after 92 percent recycle. The BPT flow rate is based on the rate reported by the facility which discharges this water after recycle. This rate is allocated for any plant hydrolyzing crude $ZrCl_4$ and controlling off-gases with a wet air pollution control device.

IRON EXTRACTION (MIBK) STEAM STRIPPER BOTTOMS

The BPT wastewater discharge allowance for iron extraction (MIBK) steam stripper bottoms at proposal was 2,077 l/kkg (498 gal/ton) of zirconium and hafnium produced. Based on comments which the Agency received on the proposed rulemaking, it was decided that the mass of zirconium dioxide and hafnium dioxide produced is a more appropriate production normalizing parameter for this wastewater stream. The Agency also evaluated new flow and

production data submitted after proposal with industry comments. The final BPT wastewater discharge rate for this subdivision is 2,244 l/kkg (538 gal/ton) of zirconium dioxide and hafnium dioxide produced. This rate is based on the average of the rates reported by the facilities which generate this wastewater stream. This rate is allocated to any plant recovering MIBK from an iron-rich stream following the extraction of iron from the feed stream to the zirconium-hafnium separations process.

ZIRCONIUM FILTRATE

The BPT wastewater discharge allowance for zirconium filtrate at proposal was 71,190 l/kkg (17,078 gal/ton) of zirconium produced. Based on comments which the Agency received on the proposed rulemaking, it was decided that the mass of zirconium dioxide and hafnium dioxide produced is a more appropriate production normalizing parameter for this wastewater stream. The Agency also evaluated new flow and production data submitted after proposal with industry comments. The final BPT wastewater discharge rate for this subdivision is 38,790 l/kkg (9,297 gal/ton) of zirconium dioxide and hafnium dioxide produced. This rate is based on the average of the rates reported by the facilities which generate this stream. No reuse or recycle of this wastewater is reported. This rate is allocated to any plant precipitating zirconium as either a sulfate or an hydroxide.

HAFNIUM FILTRATE

There is no BPT wastewater discharge allowance for hafnium filtrate. All of the plants reporting this wastewater stream achieves zero discharge of this stream. Because no plants reported a discharge, the BPT allowance for this wastewater is zero.

CALCINING CAUSTIC WET AIR POLLUTION CONTROL

The BPT wastewater discharge allowance for calcining caustic wet air pollution control at proposal was 17,856 l/kkg (4,284 gal/ton) of zirconium and hafnium produced. Based on comments which the Agency received on the proposed rulemaking, it was decided that the mass of zirconium dioxide and hafnium dioxide produced is a more appropriate production normalizing parameter for this wastewater stream. The Agency also evaluated new flow and production data submitted after proposal with industry comments. The final BPT wastewater discharge rate for this subdivision is 8,997 l/kkg (2,156 gal/ton) of zirconium dioxide and hafnium dioxide produced. The BPT flow rate is based on the rate reported by one facility, which currently practices 90 percent recycle. This rate is allocated to any plant calcining zirconium or hafnium hydroxide and controlling off-gases with a caustic scrubber.

PURE CHLORINATION WET AIR POLLUTION CONTROL

The BPT wastewater discharge allowance for pure chlorination wet air pollution control at proposal was 26,322 l/kkg (6,314 gal/ton) of zirconium and hafnium produced. The Agency has evaluated new flow and production data submitted after proposal with industry comments. The final BPT wastewater discharge rate for this subdivision is 38,317 l/kkg (9,204 gal/ton) of zirconium and hafnium. The BPT rate is based on the rate reported by one facility currently practicing 97 percent recycle of scrubber liquor prior to discharge. This rate is allocated to any plant chlorinating zirconium or hafnium dioxide and controlling off-gases with a wet scrubber.

REDUCTION AREA VENT WET AIR POLLUTION CONTROL

The BPT wastewater discharge allowance for reduction area-vent wet air pollution control at proposal was 658 l/kkg (158 gal/ton) of zirconium and hafnium produced. The Agency has evaluated new flow and production data submitted after proposal with industry comments. The final BPT wastewater discharge rate for this subdivision is 3,686 l/kkg (885 gal/ton) of zirconium and hafnium produced. The BPT rate is based on the rate reported by one plant which practices 97 percent recycle of scrubber liquor prior to discharge. This rate is allocated to any plant reducing zirconium or hafnium tetrachloride to metal with magnesium, and controlling area fumes with a wet scrubber.

MAGNESIUM RECOVERY WET AIR POLLUTION CONTROL

The BPT wastewater discharge allowance for magnesium recovery off-gas wet air pollution control at proposal was 13,161 l/kkg (3,157 gal/ton) of zirconium and hafnium produced. The Agency has evaluated new flow and production data submitted after proposal with industry comments. The final BPT wastewater discharge rate for this subdivision is 20,733 l/kkg (4,980 gal/ton) of zirconium and hafnium produced. This rate is based on the rate reported by one plant which currently practices 96 percent recycle of scrubber liquor prior to discharge. This rate is allocated to any plant recovering magnesium from the magnesium chloride produced in the zirconium or hafnium reduction process, and controlling the resultant off-gases with a wet scrubber.

MAGNESIUM RECOVERY AREA VENT WET AIR POLLUTION CONTROL

The final BPT wastewater discharge allowance for magnesium recovery area vent wet air pollution control is 11,518 l/kkg (2,767 gal/ton) of zirconium and hafnium produced. This flow is based on the discharge flow reported by one plant which currently practices 96 percent recycle of the scrubber liquor prior to discharge. This BPT flow rate is allocated to any plant which controls emissions from magnesium recovery area ventilation air using a wet scrubbing system.

ZIRCONIUM CHIP CRUSHING WET AIR POLLUTION CONTROL

These is no BPT wastewater discharge allowance for zirconium chip crushing wet air pollution control. Zero discharge is achieved by complete recycle of scrubber liquor. Because no discharge is reported, the BPT allowance for this wastewater is zero.

ACID LEACHATE FROM ZIRCONIUM METAL PRODUCTION

The BPT wastewater discharge allowance for acid leachate from zirconium metal production is 29,465 l/kkg (7,068 gal/ton) of pure zirconium produced. Separate allowances are given for pure metal and alloys (see next subdivision). Different flows are reported for the two products because of differences in the method of reduction used. The BPT allowances for acid leachate from zirconium metal and zirconium alloy production are based on information from one plant that discharges this stream. No reuse or recycle of this wastewater is reported. This rate is allocated to any plant purifying zirconium metal by acid leaching.

ACID LEACHATE FROM ZIRCONIUM ALLOY PRODUCTION

The BPT wastewater discharge allowance for acid leachate from zirconium alloy production is 15,771 l/kkg (3,783 gal/ton) of zirconium contained in alloys. This rate is based on the average of the flow rates reported. This rate is allocated at any plant purifying zirconium-nickel alloy by acid leaching.

LEACHING RINSE WATER FROM ZIRCONIUM METAL PRODUCTION

The BPT wastewater discharge allowance for leaching rinse water from zirconium metal production is 58,930 l/kkg (14,137 gal/ton) of pure zirconium metal produced. As with acid leachate, separate allowances are given for pure metal and alloys (see next subdivision) because the differences in flows reported for the two products result from differences in the method of reduction used. The BPT allowance for leaching rinse water from zirconium metal production is based on the discharge rate at one plant which practices no recycle or reuse. This rate is allocated to any plant rinsing zirconium metal following acid leaching purification.

LEACHING RINSE WATER FROM ZIRCONIUM ALLOY PRODUCTION

The BPT wastewater discharge allowance for leaching rinse water from zirconium alloy production is 789 l/kkg (189 gal/ton) of zirconium contained in alloys. This rate is based on the average of the flows reported. This rate is allocated to any plant rinsing zirconium alloys following acid leaching purification.

REGULATED POLLUTANT PARAMETERS

The raw wastewater concentrations from individual operations and the subcategory as a whole were examined to select certain

pollutant parameters for limitation. This examination and evaluation was presented in Section VI. A total of seven pollutants or pollutant parameters are selected for limitation under BPT and are listed below:

119. chromium (total)
121. cyanide (total)
122. lead
124. nickel
ammonia
total suspended solids (TSS)
pH

EFFLUENT LIMITATIONS

The pollutant concentrations achievable by application of the model BPT technology are discussed in Section VII of Vol. I and summarized there in Table VII-21 (page 250). These concentrations (both one day maximum and monthly average values) are multiplied by the BPT normalized discharge flows summarized in Table IX-1 (page 5167) to calculate the mass of pollutants allowed to be discharged per mass of product. The results of these calculations in milligrams of pollutant per kilogram of product represent the BPT effluent limitations and are presented in Table IX-2 (page 5169) for each individual waste stream.

Table IX-1

BPT WASTEWATER DISCHARGE RATES FOR THE PRIMARY ZIRCONIUM AND HAFNIUM SUBCATEGORY

Wastewater Stream	BPT Normalized Discharge Rate l/kkg	BPT Normalized Discharge Rate gal/ton	Production Normalizing Parameter
Sand drying wet air pollution control	568	136	Zirconium dioxide and hafnium dioxide produced
Sand chlorination off-gas wet air pollution control	43,470	10,418	Zirconium dioxide and hafnium dioxide produced
Sand chlorination area-vent wet air pollution control	8,524	2,043	Zirconium dioxide and hafnium dioxide produced
$SiCl_4$ purification wet air pollution control	7,498	1,797	Zirconium dioxide and hafnium dioxide produced
Feed makeup wet air pollution control	5,683	1,362	Zirconium dioxide and hafnium dioxide produced
Iron extraction (MIBK) steam stripper bottoms	2,244	538	Zirconium dioxide and hafnium dioxide produced
Zirconium filtrate	38,790	9,297	Zirconium dioxide and hafnium dioxide produced
Hafnium filtrate	0	0	Zirconium dioxide and hafnium dioxide produced
Calcining caustic wet air pollution control	8,997	2,156	Zirconium dioxide and hafnium dioxide produced

Table IX-1 (Continued)

BPT WASTEWATER DISCHARGE RATES FOR THE PRIMARY ZIRCONIUM AND HAFNIUM SUBCATEGORY

Wastewater Stream	BPT Normalized Discharge Rate		Production Normalizing Parameter
	l/kkg	gal/ton	
Pure chlorination wet air pollution control	38,317	9,204	Zirconium and hafnium produced
Reduction area vent wet air pollution control	3,686	885	Zirconium and hafnium produced
Magnesium recovery off-gas wet air pollution control	20,733	4,980	Zirconium and hafnium produced
Magnesium recovery area vent wet air pollution control	11,518	2,767	Zirconium and hafnium produced
Zirconium chip crushing wet air pollution control	0	0	Zirconium and hafnium produced
Acid leachate from zirconium metal production	29,465	7,068	Pure zirconium produced
Acid leachate from zirconium alloy production	15,771	3,783	Zirconium contained in alloys produced
Leaching rinse water from zirconium metal production	58,930	14,137	Pure zirconium produced
Leaching rinse water from zirconium alloy production	789	189	Zirconium contained in alloys produced

TABLE IX-2

BPT MASS LIMITATIONS FOR THE
PRIMARY ZIRCONIUM AND HAFNIUM SUBCATEGORY

(a) Sand Drying Wet Air Pollution Control BPT

Pollutant or pollutant property	Maximum for any one day	Maximum for monthly average
	mg/kg (lb/million lbs) of zirconium dioxide and hafnium dioxide produced	
Cadmium	0.193	0.085
*Chromium	0.250	0.102
*Cyanide	0.165	0.068
*Lead	0.239	0.114
*Nickel	1.091	0.721
Thallium	1.164	0.517
Zinc	0.829	0.346
*Ammonia	75.710	33.280
Hafnium	16.360	7.895
Radium-226	17.040	6.379
Zirconium	16.360	7.895
*TSS	23.290	11.080
*pH Within the range of 7.5 to 10.0 at all times		

(b) Sand Chlorination Off-Gas Wet Air Pollution Control BPT

Pollutant or pollutant property	Maximum for any one day	Maximum for monthly average
	mg/kg (lb/million lbs) of zirconium dioxide and hafnium dioxide produced	
Cadmium	14.780	6.521
*Chromium	19.130	7.825
*Cyanide	12.610	5.216
*Lead	18.260	8.694
*Nickel	83.460	55.210
Thallium	89.110	39.560
Zinc	63.470	26.520
*Ammonia	5,795.000	2,547.000
Hafnium	1,252.000	604.200
Radium-226	1,304.000	488.200
Zirconium	1,252.000	604.200
*TSS	1,782.000	847.700
*pH Within the range of 7.5 to 10.0 at all times		

*Regulated Pollutant

TABLE IX-2 (Continued)

BPT MASS LIMITATIONS FOR THE
PRIMARY ZIRCONIUM AND HAFNIUM SUBCATEGORY

(c) Sand Chlorination Area-Vent Wet Air Pollution Control BPT

Pollutant or pollutant property	Maximum for any one day	Maximum for monthly average
	mg/kg (lb/million lbs) of zirconium dioxide and hafnium dioxide produced	
Cadmium	2.898	1.279
*Chromium	3.751	1.534
*Cyanide	2.472	1.023
*Lead	3.580	1.705
*Nickel	16.370	10.830
Thallium	17.470	7.757
Zinc	12.450	5.200
*Ammonia	1,136.000	499.500
Hafnium	245.500	118.500
Radium-226	255.700	95.720
Zirconium	245.500	118.500
*TSS	349.500	166.200
*pH	Within the range of 7.5 to 10.0 at all times	

(d) $SiCl_4$ Purification Wet Air Pollution Control BPT

Pollutant or pollutant property	Maximum for any one day	Maximum for monthly average
	mg/kg (lb/million lbs) of zirconium dioxide and hafnium dioxide produced	
Cadmium	2.549	1.125
*Chromium	3.299	1.350
*Cyanide	2.174	0.900
*Lead	3.149	1.500
*Nickel	14.400	9.522
Thallium	15.370	6.823
Zinc	10.950	4.574
*Ammonia	999.500	439.400
Hafnium	215.900	104.200
Radium-226	224.900	84.200
Zirconium	215.900	104.200
*TSS	307.400	146.200
*pH	Within the range of 7.5 to 10.0 at all times	

*Regulated Pollutant

TABLE IX-2 (Continued)

BPT MASS LIMITATIONS FOR THE
PRIMARY ZIRCONIUM AND HAFNIUM SUBCATEGORY

(e) Feed Makeup Wet Air Pollution Control BPT

Pollutant or pollutant property	Maximum for any one day	Maximum for monthly average
	mg/kg (lb/million lbs) of zirconium dioxide and hafnium dioxide produced	
Cadmium	1.932	0.852
*Chromium	2.501	1.023
*Cyanide	1.648	0.682
*Lead	2.387	1.137
*Nickel	10.910	7.217
Thallium	11.650	5.172
Zinc	8.297	3.467
*Ammonia	757.500	333.000
Hafnium	163.700	78.990
Radium-226	170.500	63.820
Zirconium	163.700	78.990
*TSS	233.000	110.800
*pH	Within the range of 7.5 to 10.0 at all times	

(f) Iron Extraction (MIBK) Steam Stripper Bottoms BPT

Pollutant or pollutant property	Maximum for any one day	Maximum for monthly average
	mg/kg (lb/million lbs) of zirconium dioxide and hafnium dioxide produced	
Cadmium	0.763	0.337
*Chromium	0.987	0.404
*Cyanide	0.651	0.269
*Lead	0.942	0.449
*Nickel	4.308	2.850
Thallium	4.600	2.042
Zinc	3.276	1.369
*Ammonia	299.100	131.500
Hafnium	64.630	31.190
Radium-226	67.320	25.200
Zirconium	64.630	31.190
*TSS	92.000	43.760
*pH	Within the range of 7.5 to 10.0 at all times	

*Regulated Pollutant

TABLE IX-2 (Continued)

BPT MASS LIMITATIONS FOR THE
PRIMARY ZIRCONIUM AND HAFNIUM SUBCATEGORY

(g) Zirconium Filtrate BPT

Pollutant or pollutant property	Maximum for any one day	Maximum for monthly average
	mg/kg (lb/million lbs) of zirconium dioxide and hafnium dioxide produced	
Cadmium	13.190	5.819
*Chromium	17.070	6.982
*Cyanide	11.250	4.655
*Lead	16.290	7.758
*Nickel	74.480	49.260
Thallium	79.520	35.300
Zinc	56.630	23.660
*Ammonia	5,171.000	2,273.000
Hafnium	1,117.000	539.200
Radium.226	1,164.000	435.600
Zirconium	1,117.000	539.200
*TSS	1,590.000	756.400
*pH	Within the range of 7.5 to 10.0 at all times	

(h) Hafnium Filtrate BPT

Pollutant or pollutant property	Maximum for any one day	Maximum for monthly average
mg/kg (lb/million lbs) of zirconium dioxide and hafnium dioxide produced		
Cadmium	0.000	0.000
*Chromium	0.000	0.000
*Cyanide	0.000	0.000
*Lead	0.000	0.000
*Nickel	0.000	0.000
Thallium	0.000	0.000
Zinc	0.000	0.000
*Ammonia	0.000	0.000
Hafnium	0.000	0.000
Radium-226	0.000	0.000
Zirconium	0.000	0.000
*TSS	0.000	0.000
*pH	Within the range of 7.5 to 10.0 at all times	

*Regulated Pollutant

TABLE IX-2 (Continued)

BPT MASS LIMITATIONS FOR THE
PRIMARY ZIRCONIUM AND HAFNIUM SUBCATEGORY

(i) Calcining Caustic Wet Air Pollution Control BPT

Pollutant or pollutant property	Maximum for any one day	Maximum for monthly average
	mg/kg (lb/million lbs) of zirconium dioxide and hafnium dioxide produced	
Cadmium	3.059	1.350
*Chromium	3.959	1.619
*Cyanide	2.609	1.080
*Lead	3.779	1.799
*Nickel	17.270	11.430
Thallium	18.440	8.187
Zinc	13.140	5.488
*Ammonia	1,199.000	527.200
Hafnium	259.100	125.100
Radium-226	269.900	101.000
Zirconium	259.100	125.100
*TSS	368.900	175.400
*pH	Within the range of 7.5 to 10.0 at all times	

(j) Pure Chlorination Wet Air Pollution Control BPT

Pollutant or pollutant property	Maximum for any one day	Maximum for monthly average
	mg/kg (lb/million lbs) of zirconium and hafnium produced	
Cadmium	13.030	5.748
*Chromium	16.860	6.897
*Cyanide	11.110	4.598
*Lead	16.090	7.663
*Nickel	73.570	48.660
Thallium	78.550	34.870
Zinc	55.940	23.320
*Ammonia	5,106.000	2,245.000
Hafnium	1,104.000	532.600
Radium-226	1,150.000	430.300
Zirconium	1,104.000	532.600
*TSS	1,571.000	747.200
*pH	Within the range of 7.5 to 10.0 at all times	

*Regulated Pollutant

TABLE IX-2 (Continued)

BPT MASS LIMITATIONS FOR THE
PRIMARY ZIRCONIUM AND HAFNIUM SUBCATEGORY

(k) Reduction Area Vent Wet Air Pollution Control BPT

Pollutant or pollutant property	Maximum for any one day	Maximum for monthly average
	mg/kg (lb/million lbs) of zirconium and hafnium produced	
Cadmium	1.253	0.553
*Chromium	1.662	0.663
*Cyanide	1.069	0.442
*Lead	1.548	0.732
*Nickel	7.077	4.681
Thallium	7.556	3.354
Zinc	5.382	2.248
*Ammonia	491.300	216.000
Hafnium	106.200	51.240
Radium-226	110.600	41.390
Zirconium	106.200	57.240
*TSS	151.100	71.880
*pH Within the range of 7.5 to 10.0 at all times		

(l) Magnesium Recovery Off-Gas Wet Air Pollution Control BPT

Pollutant or pollutant property	Maximum for any one day	Maximum for monthly average
	mg/kg (lb/million lbs) of zirconium and hafnium produced	
Cadmium	7.049	3.110
*Chromium	9.123	3.232
*Cyanide	6.013	2.488
*Lead	8.708	4.147
*Nickel	39.810	26.330
Thallium	42.500	18.870
Zinc	30.270	12.650
*Ammonia	2,764.000	1,215.000
Hafnium	597.100	288.200
Radium-226	622.000	232.800
Zirconium	597.100	288.200
*TSS	850.100	404.300
*pH Within the range of 7.5 to 10.0 at all times		

*Regulated Pollutant

TABLE IX-2 (Continued)

BPT MASS LIMITATIONS FOR THE
PRIMARY ZIRCONIUM AND HAFNIUM SUBCATEGORY

(m) Magnesium Recovery Area Vent Wet Air Pollution Control BPT

Pollutant or pollutant property	Maximum for any one day	Maximum for monthly average
	mg/kg (lb/million lbs) of zirconium and hafnium produced	
Cadmium	3.916	0.576
*Chromium	5.068	2.073
*Cyanide	3.340	1.382
*Lead	4.838	2.304
*Nickel	22.110	14.630
Thallium	23.610	10.480
Zinc	16.820	7.026
*Ammonia	1,535.000	675.000
Hafnium	331.700	160.100
Radium-226	345.500	129.300
Zirconium	331.700	160.100
*TSS	472.200	224.600
*pH Within the range of 7.5 to 10.0 at all times		

(n) Zirconium Chip Crushing Wet Air Pollution Control BPT

Pollutant or pollutant property	Maximum for any one day	Maximum for monthly average
	mg/kg (lb/million lbs) of zirconium and hafnium produced	
Cadmium	0.000	0.000
*Chromium	0.000	0.000
*Cyanide	0.000	0.000
*Lead	0.000	0.000
*Nickel	0.000	0.000
Thallium	0.000	0.000
Zinc	0.000	0.000
*Ammonia	0.000	0.000
Hafnium	0.000	0.000
Radium-226	0.000	0.000
Zirconium	0.000	0.000
*TSS	0.000	0.000
*pH Within the range of 7.5 to 10.0 at all times		

*Regulated Pollutant

TABLE IX-2 (Continued)

BPT MASS LIMITATIONS FOR THE
PRIMARY ZIRCONIUM AND HAFNIUM SUBCATEGORY

(o) Acid Leachate from Zirconium Metal Production BPT

Pollutant or pollutant property	Maximum for any one day	Maximum for monthly average
	mg/kg (lb/million lbs) of pure zirconium produced	
Cadmium	10.020	4.420
*Chromium	12.960	5.304
*Cyanide	8.545	3.536
*Lead	12.380	5.893
*Nickel	56.570	37.420
Thallium	60.400	26.810
Zinc	43.020	17.970
*Ammonia	3,928.000	1,727.000
Hafnium	848.600	409.600
Radium-226	884.000	330.900
Zirconium	848.600	409.600
*TSS	1,208.000	574.600
*pH Within the range of 7.5 to 10.0 at all times		

(p) Acid Leachate from Zirconium Alloy Production BPT

Pollutant or pollutant property	Maximum for any one day	Maximum for monthly average
	mg/kg (lb/million lbs) of zirconium contained in alloys produced	
Cadmium	5.362	2.366
*Chromium	6.939	2.839
*Cyanide	4.574	1.893
*Lead	6.624	3.154
*Nickel	30.280	20.030
Thallium	32.330	14.350
Zinc	23.030	9.620
*Ammonia	2,102.000	924.200
Hafnium	454.200	219.200
Radium-226	473.100	177.100
Zirconium	454.200	219.200
*TSS	646.600	307.500
*pH Within the range of 7.5 to 10.0 at all times		

*Regulated Pollutant

TABLE IX-2 (Continued)

BPT MASS LIMITATIONS FOR THE
PRIMARY ZIRCONIUM AND HAFNIUM SUBCATEGORY

(q) Leaching Rinse Water from Zirconium Metal Production BPT

Pollutant or pollutant property	Maximum for any one day	Maximum for monthly average
	mg/kg (lb/million lbs) of pure zirconium produced	
Cadmium	20.040	8.840
*Chromium	25.930	10.610
*Cyanide	17.090	7.072
*Lead	24.750	11.790
*Nickel	113.100	74.840
Thallium	120.800	53.630
Zinc	86.040	35.950
*Ammonia	7,855.000	3,453.000
Hafnium	1,697.000	819.100
Radium-226	1,768.000	661.800
Zirconium	1,697.000	819.100
*TSS	2,416.000	1,149.000
*pH Within the range of 7.5 to 10.0 at all times		

(r) Leaching Rinse Water from Zirconium Alloy Production BPT

Pollutant or pollutant property	Maximum for any one day	Maximum for monthly average
	mg/kg (lb/million lbs) of zirconium contained in alloys produced	
Cadmium	0.268	0.118
*Chromium	0.347	0.142
*Cyanide	0.229	0.095
*Lead	0.331	0.158
*Nickel	1.515	1.002
Thallium	1.617	0.718
Zinc	1.152	0.481
*Ammonia	105.200	46.240
Hafnium	22.720	10.970
Radium-226	23.670	8.860
Zirconium	22.720	10.970
*TSS	32.350	15.390
*pH Within the range of 7.5 to 10.0 at all times		

*Regulated Pollutant

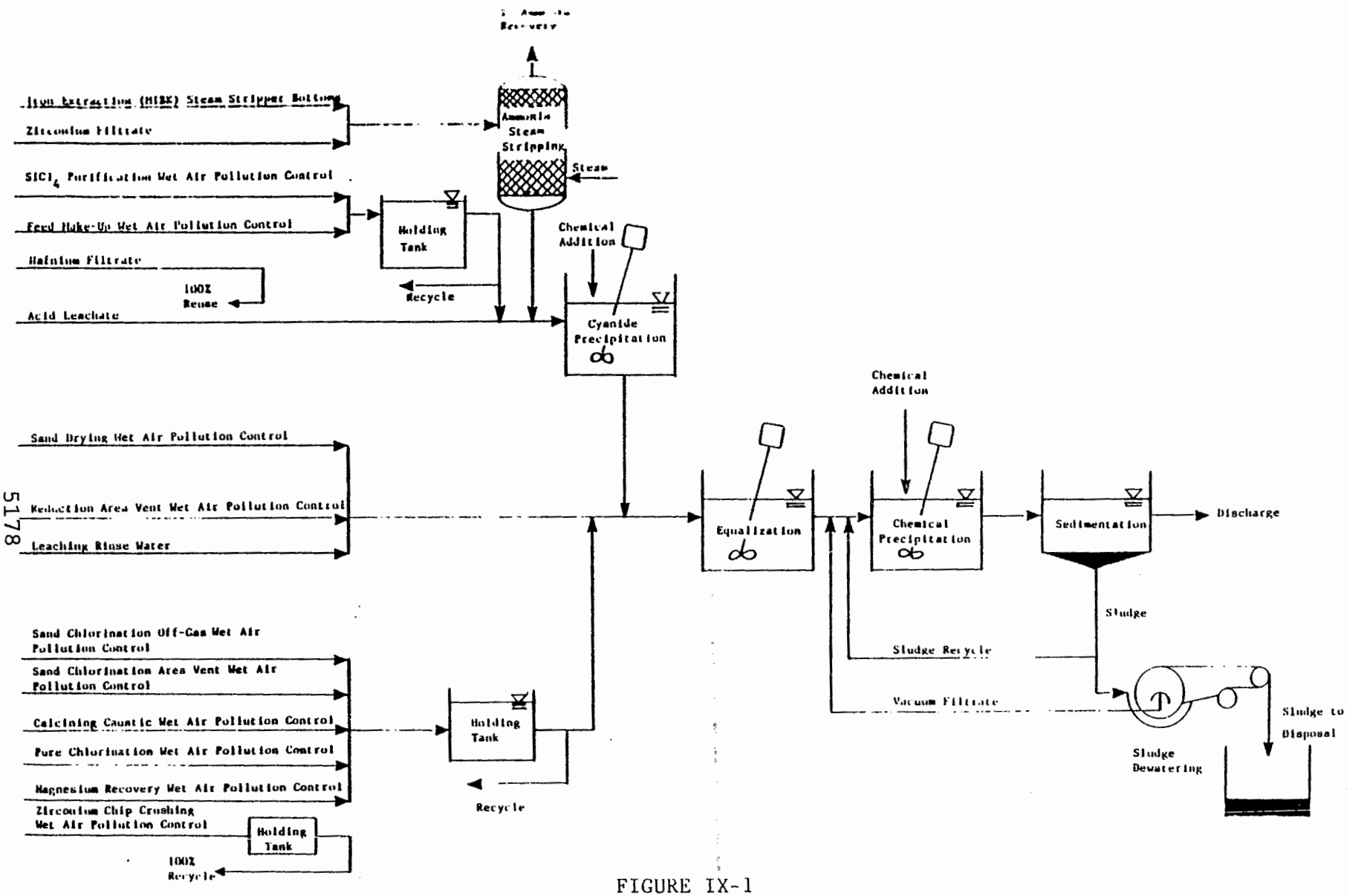

FIGURE IX-1

BPT TREATMENT SCHEME

SECTION X

BEST AVAILABLE TECHNOLOGY ECONOMICALLY ACHIEVABLE

These effluent limitations are based on the best control and treatment technology used by a specific point source within the industrial category or subcategory, or by another category from which it is transferable. Emphasis is placed on additional treatment techniques applied at the end of the treatment systems currently used, as well as reduction of the amount of water used and discharged, process control, and treatment technology optimization.

The factors considered in assessing best available technology economically achievable (BAT) include the age of equipment and facilities involved, the process used, process changes, nonwater quality environmental impacts (including energy requirements), and the costs of application of such technology. BAT represents the best available technology economically achievable at plants of various ages, sizes, processes, or other characteristics. BAT may be transferred from a different subcategory or category and may include feasible process changes or internal controls, even when not in common industry practice.

The required assessment of BAT considers costs, but does not require a balancing of costs against effluent reduction benefits. However, in assessing the proposed and promulgated BAT, the Agency has given substantial weight to the economic achievability of the technology.

TECHNICAL APPROACH TO BAT

The Agency reviewed a wide range of technology options and evaluated the available possibilities to ensure that the most effective and beneficial technologies were used as the basis of BAT. To accomplish this, the Agency elected to examine two technology options which could be applied to the primary zirconium and hafnium subcategory as treatment options for the basis of BAT effluent limitations.

For the development of BAT effluent limitations, mass loadings were calculated for each wastewater source or subdivision in the subcategory using the same technical approach as in Section IX for BPT limitations development. The differences in the mass loadings for BPT and BAT are due to increased treatment effectiveness achievable with the more sophisticated BAT treatment technology and reductions in the effluent flows allocated to various waste streams.

In summary, the treatment technologies considered for the primary zirconium and hafnium subcategory are:

Option A (Figure X-1, page 5199):

- o Preliminary treatment with ammonia steam stripping and cyanide precipitation (where required)
- o Chemical precipitation and sedimentation

Option C (Figure X-2, page 5200):

- o Preliminary treatment with ammonia steam stripping and cyanide precipitation (where required)
- o Chemical precipitation and sedimentation
- o Multimedia filtration

The two technology options examined for BAT are discussed in greater detail below. The first option considered is the same as considered for BPT and is presented in the previous section. The last two options each represent substantial progress toward preventing pollution of the environment above and beyond the progress achievable by BPT.

OPTION A

Option A for the primary zirconium and hafnium subcategory is equivalent to the control and treatment technologies selected as the basis for BPT in Section IX. The BPT end-of-pipe treatment scheme includes chemical precipitation and sedimentation with ammonia steam stripping, and cyanide precipitation preliminary treatment of wastewaters containing treatable concentrations of ammonia or cyanide (See Figure X-1). The discharge allowances for Option A are equal to the discharge allowances allocated to each stream at BPT.

OPTION C

Option C for the primary zirconium and hafnium subcategory consists of all control and treatment requirements of Option A (ammonia steam stripping and cyanide precipitation where required, chemical precipitation and sedimentation), plus multimedia filtration technology added at the end of the Option A treatment scheme (see Figure X-2).

Multimedia filtration is used to remove suspended solids, including precipitates of toxic metals, beyond the concentration attainable by gravity sedimentation. The filter suggested is of the gravity, mixed media type, although other filters, such as rapid sand filters or pressure filters, would perform satisfactorily.

INDUSTRY COST AND POLLUTANT REMOVAL ESTIMATES

As one means of evaluating each technology option, EPA developed

estimates of the pollutant reduction benefits and the compliance costs associated with each option. The methodologies are described below.

POLLUTANT REMOVAL ESTIMATES

Sampling data collected during the field sampling program were used to characterize the major wastewater streams considered for regulation. At each sampled facility, the sampling data were production normalized for each unit operation (i.e., mass of pollutant generated per mass of product manufactured). This value, referred to as the raw waste, was used to estimate the mass of priority pollutants generated within the primary zirconium and hafnium subcategory. The pollutant removal estimates were calculated for each plant by first estimating the total mass of each pollutant in the untreated wastewater. This was calculated by first multiplying the raw waste values by the corresponding production value for that stream and then summing these values for each pollutant for every stream generated by the plant.

Next, the volume of wastewater discharged after the application of each treatment option was estimated for each operation at each plant by first comparing the actual discharge to the regulatory flow. The smaller of the two values was selected and summed with the other plant flows. The mass of pollutant discharged was then estimated by multiplying the achievable concentration values attainable with the option (mg/l) by the estimated volume of process wastewater discharged by the subcategory. Finally, the mass of pollutant removed is the difference between the estimated mass of pollutant generated by each plant in the subcategory and the mass of pollutant discharged after application of the treatment option.

The pollutant removal estimates for the primary zirconium and hafnium subcategory are presented in Table X-2 (page 5186), for direct dischargers.

COMPLIANCE COSTS

In estimating subcategory-wide compliance costs, the first step was to develop a cost model, relating the total costs associated with installation and operation of wastewater treatment technologies to plant process wastewater discharge. EPA applied the model on a per plant basis, a plant's costs both capital, and operating and maintenance being determined by what treatment it has in place and by its individual process wastewater discharge (from dcp). The final step was to annualize the capital costs, and to sum the annualized capital costs, and the operating and maintenance costs, yielding the cost of compliance for the subcategory (see Table X-3, page 5187). These costs were used in assessing economic achievability.

BAT OPTION SELECTION - PROPOSAL

EPA proposed Level A BAT limitations for plants which only produce zirconium or zirconium-nickel alloys by magnesium reduction of ZrO_2 based on barium chloride coprecipitation, cyanide precipitation, ammonia steam stripping and chemical precipitation and sedimentation (BPT technology), plus in-process wastewater flow reduction. Level B limitations were proposed for all other plants in the subcategory. The proposed Level B limitations were based on barium chloride coprecipitation, cyanide precipitation, ammonia steam stripping and chemical precipitation and sedimentation (BPT technology), plus flow reduction and filtration.

Flow reduction was included as part of the proposed BAT technology because one discharging facility in this subcategory had erroneously reported that they practice no recycle of scrubber liquor associated with any of the wet air pollution control subdivisions. This facility submitted new data with comments on the proposed rulemaking which indicate that the facility is currently practicing recycle at a rate of 90 percent or greater for all wet air pollution control subdivisions. The Agency evaluated the new flow and production data and changed the BPT flow rates for several of the subdivisions. The Agency also decided that further flow reduction through recycle, beyond the 90 percent or greater already practiced, is not feasible. The final BAT wastewater discharge rates are therefore equal to the promulgated BPT wastewater discharge rates for all subdivisions.

BAT OPTION SELECTION PROMULGATION

EPA is not promulgating BAT limitations for plants which only produce zirconium or zirconium-nickel alloys by magnesium reduction of ZrO_2. BAT limitations apply to all other plants in the subcategory. The promulgated limitations are based on cyanide precipitation, ammonia steam stripping and chemical precipitation and sedimentation (BPT technology), plus filtration.

The achievable concentration for ammonia steam stripping is based on iron and steel manufacturing category data. The achievable concentrations for cyanide precipitation are based on coil coating category data.

The pollutants specifically limited under BAT are chromium, cyanide, lead, nickel, and ammonia. The priority pollutants cadmium, thallium and zinc were also considered for regulation because they were found at treatable concentrations in the raw wastewaters from this subcategory. These pollutants were not selected for specific regulation because they will be effectively controlled when the regulated toxic metals are treated to the concentrations achievable by the model BAT technology.

WASTEWATER DISCHARGE RATES

A BAT discharge rate was calculated for each subdivision based upon the flows of the existing plants, as determined from analysis of dcp as well as flow and production data supplied with industry comments on the proposed rulemaking. The discharge rate is used with the treatability concentrations to determine BAT effluent limitations. Since the discharge rate may be different for each wastewater source, separate production normalized discharge rates for each of the 18 wastewater sources were determined and are summarized in Table X-4 (page 5188). The discharge rates are normalized on a production basis by relating the amount of wastewater generated to the mass of metal produced by the process associated with the waste stream in question. These production normalizing parameters (PNP) are also listed in Table X-4.

REGULATED POLLUTANT PARAMETERS

The Agency placed particular emphasis on the toxic pollutants. The raw wastewater concentrations from individual operations and the subcategory as a whole were examined to select certain pollutants and pollutant parameters for consideration for limitation. This examination and evaluation, presented in Section VI, concluded that 7 toxic pollutants are present in primary zirconium and hafnium wastewaters at concentrations that can be effectively reduced by identified treatment technologies.

However, the high cost associated with analysis for priority metal pollutants has prompted EPA to develop an alternative method for regulating and monitoring priority pollutant discharges from the nonferrous metals manufacturing category. Rather than developing specific effluent mass limitations and standards for each of the priority pollutants found in treatable concentrations in the raw wastewater from a given subcategory, the Agency is promulgating effluent mass limitations only for those pollutants generated in the greatest quantities as shown by the pollutant reduction benefit analysis. The pollutants selected for specific limitation are listed below:

119. chromium (total)
121. cyanide (total)
122. lead
124. nickel
ammonia

During the development of this regulation, there was considerable discussion of the true level of cyanide in the wastewaters. While both the industry and EPA disagreed about the absolute amount of cyanides present, there was no disagreement over the fact of the presence of cyanide in certain wastewater streams. Hence, it is wholly appropriate to regulate cyanide in this subcategory,

By establishing limitations and standards for certain priority metal pollutants, dischargers will attain the same degree of control over priority metal pollutants as they would have been required to achieve had all the priority metal pollutants been directly limited.

This approach is technically justified since the treatable concentrations used for chemical precipitation and sedimentation technology are based on optimized treatment for concomitant multiple metals removal. Thus, even though metals have somewhat different theoretical solubilities, they will be removed at very nearly the same rate in a chemical precipitation and sedimentation treatment system operated for multiple metals removal. Filtration as part of the technology basis is likewise justified because this technology removes metals non-preferentially.

The following toxic pollutants are excluded from limitation on the basis that they are effectively controlled by the limitations developed for chromium, cyanide, lead, nickel, ammonia:

118. cadmium
127. thallium
128. zinc

EFFLUENT LIMITATIONS

The effluent concentrations achievable by the application of the BAT treatment technology are discussed in Section VII of Vol. I and summarized there in Table VII-21 (page 250). The treatable concentrations (both one-day maximum and monthly average values) are multiplied by the BAT normalized discharge flows summarized in Table X-4 (page 5188) to calculate the mass of pollutants allowed to be discharged per mass of product. The results of these calculations in milligrams of pollutant per kilogram of product represent the BAT effluent limitations and are presented in Table X-5 (page 5190) for each individual waste stream.

CURRENT RECYCLE PRACTICES WITHIN THE PRIMARY ZIRCONIUM AND HAFNIUM SUBCATEGORY

	Number of Plants With Wastewater	Number of Plants Practicing Recycle	Range of Recycle Values (%)
Sand drying wet air pollution control	1	1	NR
Sand chlorination off-gas wet air pollution control	2	2	93
Sand chlorination area-vent wet air pollution control	1	1	96
$SiCl_4$ purification wet air pollution control	1	1	96
Feed makeup wet air pollution control	2	2	92-100*
Calcining caustic wet air pollution control	2	2	90
Pure chlorination wet air pollution control	1	1	97
Reduction area vent wet air pollution control	1	1	97
Magnesium recovery off-gas wet air pollution control	1	1	96
Magnesium recovery area vent wet air pollution control	1	1	96

*One hundred percent reuse in plant processes.

Table X-2

POLLUTANT BENEFIT ESTIMATES FOR DIRECT DISCHARGERS IN THE PRIMARY ZIRCONIUM AND HAFNIUM SUBCATEGORY

Pollutant	Total Raw Discharge (kg/yr)	Option A Discharge (kg/yr)	Option A Removed (kg/yr)	Option C Discharge (kg/yr)	Option C Removed (kg/yr)
Antimony	0.59	0.59	0	0.59	0
Arsenic	2.97	2.97	0	2.97	0
Cadmium	4.16	4.16	0	4.16	0
Chromium (Total)	121.31	49.95	71.36	41.63	79.68
Copper	13.08	13.08	0	13.08	0
Cyanide (Total)	12,773.09	41.63	12,731.47	27.95	12,745.14
Lead	730.23	71.36	658.87	47.57	682.66
Mercury	5.35	5.35	0	5.35	0
Nickel	1,088.21	440.04	648.17	130.82	957.39
Selenium	1.78	1.78	0	1.78	0
Silver	0	0	0	0	0
Thallium	33.30	33.30	0	33.30	0
Zinc	98.71	98.71	0	98.71	0
TOTAL PRIORITY POLLUTANTS	14,872.80	762.94	14,109.87	407.93	14,464.87
Ammonia	19,370,739.13	19,147.75	19,351,591.38	19,147.75	19,351,591.38
Titanium	5,262.66	77.30	5,185.35	51.54	5,211.12
Zirconium	5,262.66	2,860.27	2,402.39	1,906.94	3,355.72
Hafnium	5,262.66	2,860.27	2,402.39	1,906.94	3,355.72
Fluoride	0	0	0	0	0
TOTAL NONCONVENTIONALS	19,386,527.10	24,945.59	19,361,581.51	23,013.16	19,363,513.93
TSS	45,371.83	7,135.81	38,236.03	1,546.09	43,825.74
Oil and Grease	2,658.09	2,658.09	0	2,658.09	0
TOTAL CONVENTIONALS	48,029.92	9,793.89	38,236.03	4,204.18	43,825.74
TOTAL POLLUTANTS	19,449,429.82	35,502.42	19,413,927.40	27,625.27	19,421,804.54

TABLE X-3

Compliance costs are not presented here because the data on which they are based have been claimed to be confidential.

Table X-4

BAT WASTEWATER DISCHARGE RATES FOR THE PRIMARY ZIRCONIUM AND HAFNIUM SUBCATEGORY

Wastewater Stream	BAT Normalized Discharge Rate l/kkg	BAT Normalized Discharge Rate gal/ton	Production Normalizing Parameter
Sand drying wet air pollution control	568	136	Zirconium dioxide and hafnium dioxide produced
Sand chlorination off-gas wet air pollution control	43,470	10,418	Zirconium dioxide and hafnium dioxide produced
Sand chlorination area-vent wet air pollution control	8,524	2,043	Zirconium dioxide and hafnium dioxide produced
$SiCl_4$ purification wet air pollution control	7,498	1,797	Zirconium dioxide and hafnium dioxide produced
Feed makeup wet air pollution control	5,683	1,362	Zirconium dioxide and hafnium dioxide produced
Iron extraction (MIBK) steam stripper bottoms	2,244	538	Zirconium dioxide and hafnium dioxide produced
Zirconium filtrate	38,790	9,297	Zirconium dioxide and hafnium dioxide produced
Hafnium filtrate	0	0	Zirconium dioxide and hafnium dioxide produced
Calcining caustic wet air pollution control	8,997	2,156	Zirconium dioxide and hafnium dioxide produced

Table X-4 (Continued)

BAT WASTEWATER DISCHARGE RATES FOR THE PRIMARY ZIRCONIUM AND HAFNIUM SUBCATEGORY

Wastewater Stream	BAT Normalized Discharge Rate l/kkg	BAT Normalized Discharge Rate gal/ton	Production Normalizing Parameter
Pure chlorination wet air pollution control	38,317	9,204	Zirconium and hafnium produced
Reduction area vent wet air pollution control	3,686	885	Zirconium and hafnium produced
Magnesium recovery off-gas wet air pollution control	20,733	4,980	Zirconium and hafnium produced
Magnesium recovery area vent wet air pollution control	11,518	2,767	Zirconium and hafnium produced
Zirconium chip crushing wet air pollution control	0	0	Zirconium and hafnium produced
Acid leachate from zirconium metal production	29,465	7,068	Pure zirconium produced
Acid leachate from zirconium alloy production	15,771	3,783	Zirconium contained in alloys produced
Leaching rinse water from zirconium metal production	58,930	14,137	Pure zirconium produced
Leaching rinse water from zirconium alloy production	789	189	Zirconium contained in alloys produced

TABLE X-5

BAT MASS LIMITATIONS FOR THE
PRIMARY ZIRCONIUM AND HAFNIUM SUBCATEGORY

(a) Sand Drying Wet Air Pollution Control BAT

Pollutant or pollutant property	Maximum for any one day	Maximum for monthly average
	mg/kg (lb/million lbs) of zirconium dioxide and hafnium dioxide produced	
Cadmium	0.114	0.045
*Chromium	0.210	0.085
*Cyanide	0.114	0.045
*Lead	0.159	0.074
*Nickel	0.312	0.210
Thallium	0.795	0.346
Zinc	0.579	0.239
*Ammonia	75.710	33.280
Hafnium	11.190	5.118
Radium-226	11.360	4.271
Zirconium	11.190	5.118

(b) Sand Chlorination Off-Gas Wet Air Pollution Control BAT

Pollutant or pollutant property	Maximum for any one day	Maximum for monthly average
	mg/kg (lb/million lbs) of zirconium dioxide and hafnium dioxide produced	
Cadmium	8.694	3.478
*Chromium	16.080	6.521
*Cyanide	8.694	3.478
*Lead	12.170	5.651
*Nickel	23.910	16.080
Thallium	60.860	26.520
Zinc	44.340	18.260
*Ammonia	5,795.000	2,547.000
Hafnium	856.400	391.700
Radium-226	869.400	326.900
Zirconium	856.400	391.700

*Regulated Pollutant

TABLE X-5 (Continued)

BAT MASS LIMITATIONS FOR THE
PRIMARY ZIRCONIUM AND HAFNIUM SUBCATEGORY

(c) Sand Chlorination Area-Vent Wet Air Pollution Control BAT

Pollutant or pollutant property	Maximum for any one day	Maximum for monthly average
	mg/kg (lb/million lbs) of zirconium dioxide and hafnium dioxide produced	
Cadmium	1.705	.682
*Chromium	3.154	1.279
*Cyanide	1.705	0.682
*Lead	2.387	1.108
*Nickel	4.688	3.154
Thallium	11.930	5.200
Zinc	8.694	3.580
*Ammonia	1,136.000	499.500
Hafnium	167.900	76.800
Radium-226	170.500	64.100
Zirconium	167.900	76.800

(d) $SiCl_4$ Purification Wet Air Pollution Control BAT

Pollutant or pollutant property	Maximum for any one day	Maximum for monthly average
	mg/kg (lb/million lbs) of zirconium dioxide and hafnium dioxide produced	
Cadmium	1.500	0.600
*Chromium	2.774	1.125
*Cyanide	1.500	0.600
*Lead	2.099	0.975
*Nickel	4.124	2.774
Thallium	10.500	4.574
Zinc	7.648	3.149
*Ammonia	999.500	439.400
Hafnium	147.700	67.560
Radium.226	150.000	56.380
Zirconium	147.700	67.560

*Regulated Pollutant

TABLE X-5 (Continued)

BAT MASS LIMITATIONS FOR THE
PRIMARY ZIRCONIUM AND HAFNIUM SUBCATEGORY

(e) Feed Makeup Wet Air Pollution Control BAT

Pollutant or pollutant property	Maximum for any one day	Maximum for monthly average
	mg/kg (lb/million lbs) of zirconium dioxide and hafnium dioxide produced	
Cadmium	1.137	0.455
*Chromium	2.103	0.852
*Cyanide	1.137	0.455
*Lead	1.591	0.739
*Nickel	3.126	2.103
Thallium	7.956	3.467
Zinc	5.797	2.387
*Ammonia	757.500	333.000
Hafnium	112.000	51.200
Radium-226	113.700	42.740
Zirconium	112.000	51.200

(f) Iron Extraction (MIBK) Steam Stripper Bottoms BAT

Pollutant or pollutant property	Maximum for any one day	Maximum for monthly average
	mg/kg (lb/million lbs) of zirconium dioxide and hafnium dioxide produced	
Cadmium	0.449	0.180
*Chromium	0.830	0.337
*Cyanide	0.449	0.180
*Lead	0.628	0.292
*Nickel	1.234	0.830
Thallium	3.142	1.369
Zinc	2.289	0.942
*Ammonia	299.100	131.500
Hafnium	44.210	20.220
Radium-226	44.880	16.870
Zirconium	44.210	20.220

*Regulated Pollutant

TABLE X-5 (Continued)

BAT MASS LIMITATIONS FOR THE
PRIMARY ZIRCONIUM AND HAFNIUM SUBCATEGORY

(g) Zirconium Filtrate BAT

Pollutant or pollutant property	Maximum for any one day	Maximum for monthly average
	mg/kg (lb/million lbs) of zirconium dioxide and hafnium dioxide produced	
Cadmium	7.758	3.103
*Chromium	14.350	5.819
*Cyanide	7.758	3.103
*Lead	10.860	5.043
*Nickel	21.330	14.350
Thallium	54.310	23.660
Zinc	39.570	16.290
*Ammonia	5,171.000	2,273.000
Hafnium	764.200	349.500
Radium-226	775.800	291.700
Zirconium	764.200	349.500

(h) Hafnium Filtrate BAT

Pollutant or pollutant property	Maximum for any one day	Maximum for monthly average
	mg/kg (lb/million lbs) of zirconium dioxide and hafnium dioxide produced	
Cadmium	0.000	0.000
*Chromium	0.000	0.000
*Cyanide	0.000	0.000
*Lead	0.000	0.000
*Nickel	0.000	0.000
Thallium	0.000	0.000
Zinc	0.000	0.000
*Ammonia	0.000	0.000
Hafnium	0.000	0.000
Radium-226	0.000	0.000
Zirconium	0.000	0.000

*Regulated Pollutant

TABLE X-5 (Continued)

BAT MASS LIMITATIONS FOR THE
PRIMARY ZIRCONIUM AND HAFNIUM SUBCATEGORY

(i) Calcining Caustic Wet Air Pollution Control BAT

Pollutant or pollutant property	Maximum for any one day	Maximum for monthly average
	mg/kg (lb/million lbs) of zirconium dioxide and hafnium dioxide produced	
Cadmium	1.799	0.720
*Chromium	3.329	1.350
*Cyanide	1.799	0.720
*Lead	2.519	1.170
*Nickel	4.948	3.329
Thallium	12.600	5.488
Zinc	9.177	3.779
*Ammonia	1,199.000	527.200
Hafnium	177.200	81.060
Radium-226	179.900	67.660
Zirconium	177.200	81.060

(j) Pure Chlorination Wet Air Pollution Control BAT

Pollutant or pollutant property	Maximum for any one day	Maximum for monthly average
	mg/kg (lb/million lbs) of zirconium and hafnium produced	
Cadmium	7.663	3.065
*Chromium	14.180	5.748
*Cyanide	7.663	3.065
*Lead	10.730	4.981
*Nickel	21.070	14.180
Thallium	53.640	23.370
Zinc	39.080	16.090
*Ammonia	5,108.000	2,245.000
Hafnium	754.800	345.200
Radium.226	766.300	288.100
Zirconium	754.800	345.200

*Regulated Pollutant

TABLE X-5 (Continued)

BAT MASS LIMITATIONS FOR THE
PRIMARY ZIRCONIUM AND HAFNIUM SUBCATEGORY

(k) Reduction Area Vent Wet Air Pollution Control BAT

Pollutant or pollutant property	Maximum for any one day	Maximum for monthly average
	mg/kg (lb/million lbs) of zirconium and hafnium produced	
Cadmium	0.737	0.295
*Chromium	1.364	0.553
*Cyanide	0.737	0.295
*Lead	1.032	0.479
*Nickel	2.027	1.364
Thallium	5.160	2.248
Zinc	3.260	1.548
*Ammonia	491.300	216.000
Hafnium	72.610	33.210
Radium-226	73.720	27.720
Zirconium	72.610	33.210

(l) Magnesium Recovery Off-Gas Wet Air Pollution Control BAT

Pollutant or pollutant property	Maximum for any one day	Maximum for monthly average
	mg/kg (lb/million lbs) of zirconium and hafnium produced	
Cadmium	4.147	1.659
*Chromium	7.671	3.110
*Cyanide	4.147	1.659
*Lead	5.805	2.695
*Nickel	11.400	7.671
Thallium	29.030	12.650
Zinc	21.150	8.708
*Ammonia	2,764.000	1,215.000
Hafnium	408.400	186.800
Radium-226	414.700	155.900
Zirconium	408.400	186.800

*Regulated Pollutant

TABLE X-5 (Continued)

BAT MASS LIMITATIONS FOR THE
PRIMARY ZIRCONIUM AND HAFNIUM SUBCATEGORY

(m) Magnesium Recovery Area Vent Wet Air Pollution Control BAT

Pollutant or pollutant property	Maximum for any one day	Maximum for monthly average
	mg/kg (lb/million lbs) of zirconium and hafnium produced	
Cadmium	2.304	0.921
*Chromium	4.262	1.728
*Cyanide	2.304	0.921
*Lead	3.225	1.497
*Nickel	6.335	4.262
Thallium	16.130	7.026
Zinc	11.750	4.838
*Ammonia	1,535.000	675.000
Hafnium	226.900	103.800
Radium-226	230.400	86.620
Zirconium	226.900	103.800

(n) Zirconium Chip Crushing Wet Air Pollution Control BAT

Pollutant or pollutant property	Maximum for any one day	Maximum for monthly average
	mg/kg (lb/million lbs) of zirconium and hafnium produced	
Cadmium	0.000	0.000
*Chromium	0.000	0.000
*Cyanide	0.000	0.000
*Lead	0.000	0.000
*Nickel	0.000	0.000
Thallium	0.000	0.000
Zinc	0.000	0.000
*Ammonia	0.000	0.000
Hafnium	0.000	0.000
Radium.226	0.000	0.000
Zirconium	0.000	0.000

*Regulated Pollutant

TABLE X-5 (Continued)

BAT MASS LIMITATIONS FOR THE
PRIMARY ZIRCONIUM AND HAFNIUM SUBCATEGORY

(o) Acid Leachate from Zirconium Metal Production BAT

Pollutant or pollutant property	Maximum for any one day	Maximum for monthly average
	mg/kg (lb/million lbs) of pure zirconium produced	
Cadmium	5.893	2.357
*Chromium	10.900	4.420
*Cyanide	5.893	2.357
*Lead	8.250	3.830
*Nickel	16.210	10.900
Thallium	41.250	17.970
Zinc	30.050	12.380
*Ammonia	3,928.000	1,727.000
Hafnium	580.500	265.500
Radium-226	589.300	221.600
Zirconium	580.500	265.500

(p) Acid Leachate from Zirconium Alloy Production BAT

Pollutant or pollutant property	Maximum for any one day	Maximum for monthly average
	mg/kg (lb/million lbs) of zirconium contained in alloys produced	
Cadmium	3.154	1.262
*Chromium	5.835	2.366
*Cyanide	3.154	1.262
*Lead	4.416	2.050
*Nickel	8.674	5.835
Thallium	22.080	9.620
Zinc	16.090	6.624
*Ammonia	2,102.000	924.200
Hafnium	310.700	142.100
Radium-226	315.400	118.600
Zirconium	310.700	142.100

TABLE X-5 (Continued)

BAT MASS LIMITATIONS FOR THE
PRIMARY ZIRCONIUM AND HAFNIUM SUBCATEGORY

(q) Leaching Rinse Water from Zirconium Metal Production BAT

Pollutant or pollutant property	Maximum for any one day	Maximum for monthly average
	mg/kg (lb/million lbs) of pure zirconium produced	
Cadmium	11.790	4.714
*Chromium	21.800	8.840
*Cyanide	11.790	4.714
*Lead	16.500	7.661
*Nickel	32.410	21.800
Thallium	82.500	35.950
Zinc	60.110	24.750
*Ammonia	7,855.000	3,453.000
Hafnium	1,161.000	531.000
Radium-226	1,179.000	443.200
Zirconium	1,161.000	531.000

(r) Leaching Rinse Water from Zirconium Alloy Production BAT

Pollutant or pollutant property	Maximum for any one day	Maximum for monthly average
	mg/kg (lb/million lbs) of zirconium contained in alloys produced	
Cadmium	0.158	0.063
*Chromium	0.292	0.118
*Cyanide	0.158	0.063
*Lead	0.221	0.103
*Nickel	0.434	0.292
Thallium	1.105	0.481
Zinc	0.805	0.331
*Ammonia	105.200	46.240
Hafnium	15.540	7.109
Radium-226	15.780	5.933
Zirconium	15.540	7.109

*Regulated Pollutant

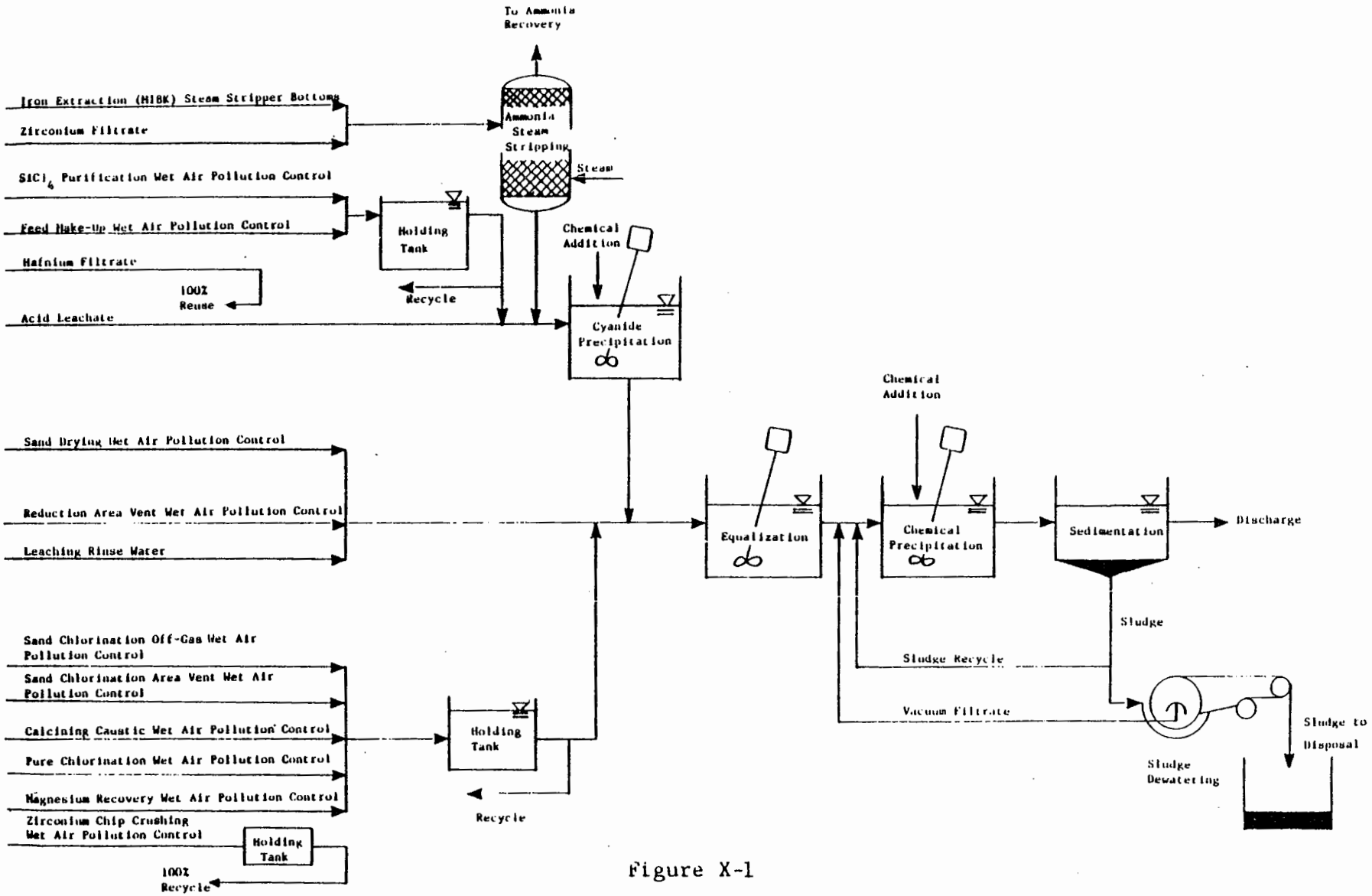

Figure X-1

BAT TREATMENT SCHEME FOR OPTION A

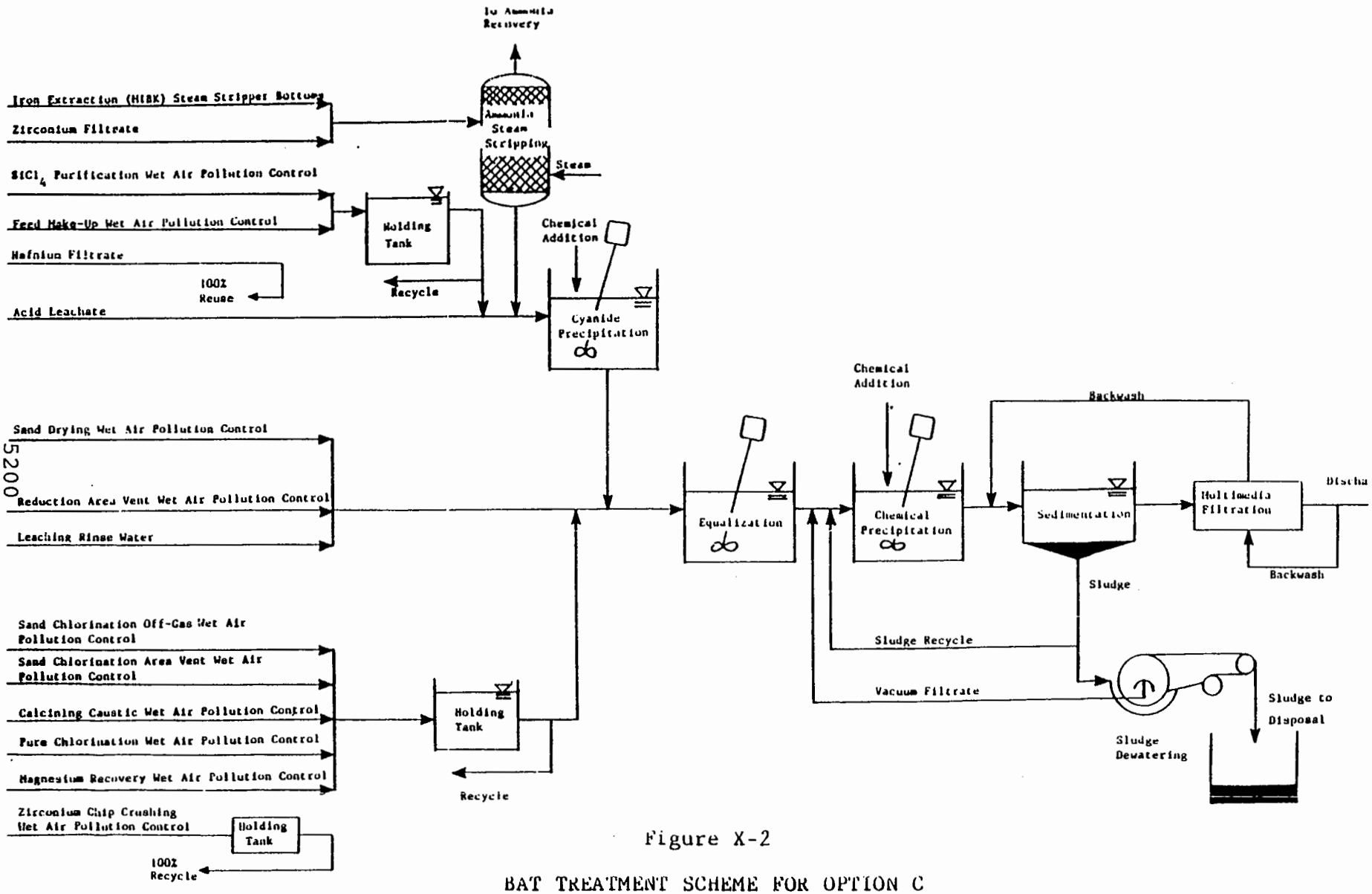

Figure X-2

BAT TREATMENT SCHEME FOR OPTION C

SECTION XI

NEW SOURCE PERFORMANCE STANDARDS

This section describes the technologies for treatment of wastewater from new sources and presents mass discharge standards for regulated pollutants for NSPS in the primary zirconium and hafnium subcategory, based on the selected treatment technology. New plants have the opportunity to design the best and most efficient production processes and wastewater treatment technologies without facing the added costs and restrictions encountered in retrofitting an existing plant. Therefore, EPA has considered the best demonstrated process changes, in-plant controls and end-of-pipe treatment technologies which reduce pollution to the maximum extent feasible as the basis for NSPS.

TECHNICAL APPROACH TO NSPS

New source performances standards are equivalent to the best available technology (BAT) selected for currently existing primary zirconium and hafnium plants. This result is a consequence of careful review by the Agency of a wide range of technical options for new source treatment systems which is discussed in Section XI of Vol. I. Additionally, there was nothing found to indicate that the wastewater flows and characteristics of new plants would not be similar to those from existing plants, since the processes used by new sources are not expected to differ from those used at existing sources. Consequently, BAT production normalized discharge rates, which are based on the best existing practices of the subcategory, can also be applied to new sources. These rates are presented in Table XI-1 (page 5203).

Treatment technologies considered for the NSPS options are identical to the treatment technologies considered for the BAT options. These options are:

Option A

- o Preliminary treatment with ammonia steam stripping and cyanide precipitation (where required)
- o Chemical precipitation and sedimentation

Option C

- o Preliminary treatment with ammonia steam stripping and cyanide precipitation (where required)
- o Chemical precipitation and sedimentation
- o Multimedia filtration

NSPS OPTION SELECTION - PROPOSAL

EPA proposed that the technology basis for NSPS for the primary zirconium and hafnium subcategory be equivalent to the technology basis for the proposed BAT. This was ammonia steam stripping, barium chloride coprecipitation, chemical precipitation and sedimentation (lime and settle) plus flow reduction and filtration. The wastewater discharge rates for the proposed NSPS were equal to those for the proposed BAT.

NSPS OPTIONS SELECTION - PROMULGATION

EPA is promulgating NSPS for the primary zirconium and hafnium subcategory equal to the promulgated BAT. Our review of the subcategory indicated that no new demonstrated technologies that improve on the BAT technology exist. We do not believe that new plants could achieve any flow reduction beyond the allowance proposed for BAT. Because NSPS is equal to BAT we do not believe that the NSPS will pose a barrier to the entry of new plants into the subcategory.

REGULATED POLLUTANT PARAMETERS

The Agency has no reason to believe that the pollutants that will be found in treatable concentrations in process wastewater within new sources will be any different than with existing sources. Accordingly, pollutants and pollutant parameters selected for limitation under NSPS,in accordance with the rationale of Sections VI and X, are identical to those selected for BAT. The conventional pollutant parameters TSS and pH are also selected for limitation.

NEW SOURCE PERFORMANCE STANDARDS

The NSPS discharge flows for each wastewater sources are the same as the discharge flow allowances for BAT and are shown in Table XI-1 (page 5201). The mass of pollutants allowed to be discharged per mass of product is calculated by multiplying the appropriate treatment effectiveness concentration (mg/l) by the production normalized wastewater discharge flow (l/kkg). The result of this calculation is the mass based, production related new source performance standard. These standards are presented in Table XI-2 (page 5205).

Table XI-1

NSPS WASTEWATER DISCHARGE RATES FOR THE PRIMARY ZIRCONIUM AND HAFNIUM SUBCATEGORY

Wastewater Stream	NSPS Normalized Discharge Rate		Production Normalizing Parameter
	l/kkg	gal/ton	
Sand drying wet air pollution control	568	136	Zirconium dioxide and hafnium dioxide produced
Sand chlorination off-gas wet air pollution control	43,470	10,418	Zirconium dioxide and hafnium dioxide produced
Sand chlorination area-vent wet air pollution control	8,524	2,043	Zirconium dioxide and hafnium dioxide produced
$SiCl_4$ purification wet air pollution control	7,498	1,797	Zirconium dioxide and hafnium dioxide produced
Feed makeup wet air pollution control	5,683	1,362	Zirconium dioxide and hafnium dioxide produced
Iron extraction (MIBK) steam stripper bottoms	2,244	538	Zirconium dioxide and hafnium dioxide produced
Zirconium filtrate	38,790	9,297	Zirconium dioxide and hafnium dioxide produced
Hafnium filtrate	0	0	Zirconium dioxide and hafnium dioxide produced
Calcining caustic wet air pollution control	8,997	2,156	Zirconium dioxide and hafnium dioxide produced

Table XI-1 (Continued)

NSPS WASTEWATER DISCHARGE RATES FOR THE PRIMARY ZIRCONIUM AND HAFNIUM SUBCATEGORY

Wastewater Stream	NSPS Normalized Discharge Rate l/kkg	NSPS Normalized Discharge Rate gal/ton	Production Normalizing Parameter
Pure chlorination wet air pollution control	38,317	9,204	Zirconium and hafnium produced
Reduction area vent wet air pollution control	3,686	885	Zirconium and hafnium produced
Magnesium recovery off-gas wet air pollution control	20,733	4,980	Zirconium and hafnium produced
Magnesium recovery area vent wet air pollution control	11,518	2,767	Zirconium and hafnium produced
Zirconium chip crushing wet air pollution control	0	0	Zirconium and hafnium produced
Acid leachate from zirconium metal production	29,465	7,068	Pure zirconium produced
Acid leachate from zirconium alloy production	15,771	3,783	Zirconium contained in alloys produced
Leaching rinse water from zirconium metal production	58,930	14,137	Pure zirconium produced
Leaching rinse water from zirconium alloy production	789	189	Zirconium contained in alloys produced

TABLE XI-2

NSPS FOR THE PRIMARY ZIRCONIUM AND HAFNIUM SUBCATEGORY

(a) Sand Drying Wet Air Pollution Control NSPS

Pollutant or pollutant property	Maximum for any one day	Maximum for monthly average
	mg/kg (lb/million lbs) of zirconium dioxide and hafnium dioxide produced	
Cadmium	0.114	0.045
*Chromium	0.210	0.085
*Cyanide	0.114	0.045
*Lead	0.159	0.074
*Nickel	0.312	0.210
Thallium	0.795	0.346
Zinc	0.579	0.239
*Ammonia	75.710	33.280
Hafnium	11.190	5.118
Radium.226	11.360	4.271
Zirconium	11.190	5.118
*TSS	8.520	6.816
*pH Within the range of 7.5 to 10.0 at all times		

(b) Acid Chlorination Off-Gas Wet Air Pollution Control NSPS

Pollutant or pollutant property	Maximum for any one day	Maximum for monthly average
	mg/kg (lb/million lbs) of zirconium dioxide and hafnium dioxide produced	
Cadmium	8.694	3.478
*Chromium	16.080	6.521
*Cyanide	8.694	3.478
*Lead	12.170	5.651
*Nickel	23.910	16.080
Thallium	60.860	26.520
Zinc	44.340	18.260
*Ammonia	5,795.000	2,547.000
Hafnium	856.400	391.700
Radium.226	869.400	326.900
Zirconium	856.400	391.700
*TSS	652.100	521.600
*pH Within the range of 7.5 to 10.0 at all times		

*Regulated Pollutant

TABLE XI-2 (Continued)

NSPS FOR THE PRIMARY ZIRCONIUM AND HAFNIUM SUBCATEGORY

(c) Sand Chlorination Area-Vent Wet Air Pollution Control NSPS

Pollutant or pollutant property	Maximum for any one day	Maximum for monthly average
	mg/kg (lb/million lbs) of zirconium dioxide and hafnium dioxide produced	
Cadmium	1.705	0.682
*Chromium	3.154	1.279
*Cyanide	1.705	0.682
*Lead	2.387	1.108
*Nickel	4.688	3.154
Thallium	11.930	5.200
Zinc	8.694	3.580
*Ammonia	1,136.000	499.500
Hafnium	167.900	76.800
Radium-226	170.500	64.100
Zirconium	167.900	76.800
*TSS	127.900	102.300
*pH	Within the range of 7.5 to 10.0 at all times	

(d) $SiCl_4$ Purification Wet Air Pollution Control NSPS

Pollutant or pollutant property	Maximum for any one day	Maximum for monthly average
	mg/kg (lb/million lbs) of zirconium dioxide and hafnium dioxide produced	
Cadmium	1.500	0.600
*Chromium	2.774	1.125
*Cyanide	1.500	0.600
*Lead	2.099	0.975
*Nickel	4.124	2.774
Thallium	10.500	4.574
Zinc	7.648	3.149
*Ammonia	999.500	439.400
Hafnium	147.700	67.560
Radium-226	150.000	56.380
Zirconium	147.700	67.560
*TSS	112.500	89.980
*pH	Within the range of 7.5 to 10.0 at all times	

*Regulated Pollutant

TABLE XI-2 (Continued)

NSPS FOR THE PRIMARY ZIRCONIUM AND HAFNIUM SUBCATEGORY

(e) Feed Makeup Wet Air Pollution Control NSPS

Pollutant or pollutant property	Maximum for any one day	Maximum for monthly average
	mg/kg (lb/million lbs) of zirconium dioxide and hafnium dioxide produced	
Cadmium	1.137	0.455
*Chromium	2.103	0.852
*Cyanide	1.137	0.455
*Lead	1.591	0.739
*Nickel	3.126	2.103
Thallium	7.956	3.467
Zinc	5.797	2.387
*Ammonia	757.500	333.000
Hafnium	112.000	51.200
Radium-226	113.700	42.740
Zirconium	112.000	51.200
*TSS	85.250	68.200
*pH	Within the range of 7.5 to 10.0 at all times	

(f) Iron Extraction (MIBK) Steam Stripper Bottoms NSPS

Pollutant or pollutant property	Maximum for any one day	Maximum for monthly average
	mg/kg (lb/million lbs) of zirconium dioxide and hafnium dioxide produced	
Cadmium	0.449	0.180
*Chromium	0.830	0.337
*Cyanide	0.449	0.180
*Lead	0.628	0.292
*Nickel	1.234	0.830
Thallium	3.142	1.369
Zinc	2.289	0.942
*Ammonia	299.100	131.500
Hafnium	44.210	20.220
Radium-226	44.880	16.870
Zirconium	44.210	20.220
*TSS	33.660	26.930
*pH	Within the range of 7.5 to 10.0 at all times	

*Regulated Pollutant

TABLE XI-2 (Continued)

NSPS FOR THE PRIMARY ZIRCONIUM AND HAFNIUM SUBCATEGORY

(g) Zirconium Filtrate NSPS

Pollutant or pollutant property	Maximum for any one day	Maximum for monthly average
mg/kg (lb/million lbs) of zirconium dioxide and hafnium dioxide produced		
Cadmium	7.758	3.103
*Chromium	14.350	5.819
*Cyanide	7.758	3.103
*Lead	10.860	5.043
*Nickel	21.330	14.350
Thallium	54.310	23.660
Zinc	39.570	16.290
*Ammonia	5,171.000	2,273.000
Hafnium	764.200	349.500
Radium-226	775.800	291.700
Zirconium	764.200	349.500
*TSS	581.900	465.500
*pH Within the range of 7.5 to 10.0 at all times		

(h) Hafnium Filtrate NSPS

Pollutant or pollutant property	Maximum for any one day	Maximum for monthly average
mg/kg (lb/million lbs) of zirconium dioxide and hafnium dioxide produced		
Cadmium	0.000	0.000
*Chromium	0.000	0.000
*Cyanide	0.000	0.000
*Lead	0.000	0.000
*Nickel	0.000	0.000
Thallium	0.000	0.000
Zinc	0.000	0.000
*Ammonia	0.000	0.000
Hafnium	0.000	0.000
Radium-226	0.000	0.000
Zirconium	0.000	0.000
*TSS	0.000	0.000
*pH Within the range of 7.5 to 10.0 at all times		

*Regulated Pollutant

TABLE XI-2 (Continued)

NSPS FOR THE PRIMARY ZIRCONIUM AND HAFNIUM SUBCATEGORY

(i) Calcining Caustic Wet Air Pollution Control NSPS

Pollutant or pollutant property	Maximum for any one day	Maximum for monthly average
	mg/kg (lb/million lbs) of zirconium dioxide and hafnium dioxide produced	
Cadmium	1.799	0.720
*Chromium	3.329	1.350
*Cyanide	1.799	0.720
*Lead	2.519	1.170
*Nickel	4.948	3.329
Thallium	12.600	5.488
Zinc	9.177	3.779
*Ammonia	1,199.000	527.200
Hafnium	177.200	81.060
Radium-226	179.900	67.660
Zirconium	177.200	81.060
*TSS	135.000	108.000
*pH	Within the range of 7.5 to 10.0 at all times	

(j) Pure Chlorination Wet Air Pollution Control NSPS

Pollutant or pollutant property	Maximum for any one day	Maximum for monthly average
	mg/kg (lb/million lbs) of zirconium and hafnium produced	
Cadmium	7.663	3.065
*Chromium	14.180	5.748
*Cyanide	7.663	3.065
*Lead	10.730	4.981
*Nickel	21.070	14.180
Thallium	53.640	23.370
Zinc	39.080	16.090
*Ammonia	5,108.000	2,245.000
Hafnium	754.800	345.200
Radium.226	766.300	288.100
Zirconium	754.800	345.200
*TSS	574.800	345.200
*pH	Within the range of 7.5 to 10.0 at all times	

*Regulated Pollutant

TABLE XI-2 (Continued)

NSPS FOR THE PRIMARY ZIRCONIUM AND HAFNIUM SUBCATEGORY

(k) Reduction Area Vent Wet Air Pollution Control NSPS

Pollutant or pollutant property	Maximum for any one day	Maximum for monthly average
	mg/kg (lb/million lbs) of zirconium and hafnium produced	
Cadmium	0.737	0.295
*Chromium	1.364	0.553
*Cyanide	0.737	0.295
*Lead	1.032	0.479
*Nickel	2.027	1.362
Thallium	5.160	2.248
Zinc	3.260	1.548
*Ammonia	491.300	216.000
Hafnium	72.610	33.210
Radium-226	73.720	27.720
Zirconium	72.610	33.210
*TSS	55.290	44.230
*pH	Within the range of 7.5 to 10.0 at all times	

(l) Magnesium Recovery Off-Gas Wet Air Pollution Control NSPS

Pollutant or pollutant property	Maximum for any one day	Maximum for monthly average
	mg/kg (lb/million lbs) of zirconium and hafnium produced	
Cadmium	4.147	1.659
*Chromium	7.671	3.110
*Cyanide	4.147	1.659
*Lead	5.805	2.695
*Nickel	11.400	7.671
Thallium	29.030	12.650
Zinc	21.150	8.708
*Ammonia	2,764.000	1,215.000
Hafnium	408.400	186.800
Radium-226	414.700	155.900
Zirconium	408.400	186.800
*TSS	404.300	248.800
*pH	Within the range of 7.5 to 10.0 at all times	

*Regulated Pollutant

TABLE XI-2 (Continued)

NSPS FOR THE PRIMARY ZIRCONIUM AND HAFNIUM SUBCATEGORY

(m) Magnesium Recovery Area Vent Wet Air Pollution Control NSPS

Pollutant or pollutant property	Maximum for any one day	Maximum for monthly average
	mg/kg (lb/million lbs) of zirconium and hafnium produced	
Cadmium	2.304	0.921
*Chromium	4.262	1.728
*Cyanide	2.304	0.921
*Lead	3.225	1.497
*Nickel	6.335	4.262
Thallium	16.130	7.026
Zinc	11.750	4.838
*Ammonia	1,535.000	675.000
Hafnium	226.900	103.800
Radium-226	230.400	86.620
Zirconium	226.900	103.800
*TSS	172.800	138.200
*pH	Within the range of 7.5 to 10.0 at all times	

(n) Zirconium Chip Crushing Wet Air Pollution Control NSPS

Pollutant or pollutant property	Maximum for any one day	Maximum for monthly average
	mg/kg (lb/million lbs) of zirconium and hafnium produced	
Cadmium	0.000	0.000
*Chromium	0.000	0.000
*Cyanide	0.000	0.000
*Lead	0.000	0.000
*Nickel	0.000	0.000
Thallium	0.000	0.000
Zinc	0.000	0.000
*Ammonia	0.000	0.000
Hafnium	0.000	0.000
Radium-226	0.000	0.000
Zirconium	0.000	0.000
*TSS	0.000	0.000
*pH	Within the range of 7.5 to 10.0 at all times	

*Regulated Pollutant

TABLE XI-2 (Continued)

NSPS FOR THE PRIMARY ZIRCONIUM AND HAFNIUM SUBCATEGORY

(o) Acid Leachate from Zirconium Metal Production NSPS

Pollutant or pollutant property	Maximum for any one day	Maximum for monthly average
	mg/kg (lb/million lbs) of pure zirconium produced	
Cadmium	5.893	2.357
*Chromium	10.900	4.420
*Cyanide	5.893	2.357
*Lead	8.250	3.830
*Nickel	16.210	10.900
Thallium	41.250	17.970
Zinc	30.050	12.380
*Ammonia	3,928.000	1,727.000
Hafnium	580.500	265.500
Radium-226	589.300	221.600
Zirconium	580.500	265.500
*TSS	442.000	353.600
*pH	Within the range of 7.5 to 10.0 at all times	

(p) Acid Leachate from Zirconium Alloy Production NSPS

Pollutant or pollutant property	Maximum for any one day	Maximum for monthly average
	mg/kg (lb/million lbs) of zirconium contained in alloys produced	
Cadmium	3.154	1.262
*Chromium	5.835	2.366
*Cyanide	3.154	1.262
*Lead	4.416	2.050
*Nickel	8.674	5.835
Thallium	22.080	9.620
Zinc	16.090	6.624
*Ammonia	2,102.000	924.200
Hafnium	310.700	142.100
Radium-226	315.400	118.600
Zirconium	310.700	142.100
*TSS	236.600	189.300
*pH	Within the range of 7.5 to 10.0 at all times	

*Regulated Pollutant

TABLE XI-2 (Continued)

NSPS FOR THE PRIMARY ZIRCONIUM AND HAFNIUM SUBCATEGORY

(q) Leaching Rinse Water from Zirconium Metal Production NSPS

Pollutant or pollutant property	Maximum for any one day	Maximum for monthly average
	mg/kg (lb/million lbs) of pure zirconium produced	
Cadmium	11.790	4.714
*Chromium	21.800	8.840
*Cyanide	11.790	4.714
*Lead	16.500	7.661
*Nickel	32.410	21.800
Thallium	82.500	35.950
Zinc	60.110	24.750
*Ammonia	7,855.000	3,453.000
Hafnium	1,161.000	531.000
Radium.226	1,179.000	443.200
Zirconium	1,161.000	531.000
*TSS	884.000	707.200
*pH	Within the range of 7.5 to 10.0 at all times	

(r) Leaching Rinse Water from Zirconium Alloy Production NSPS

Pollutant or pollutant property	Maximum for any one day	Maximum for monthly average
	mg/kg (lb/million lbs) of zirconium contained in alloys produced	
Cadmium	0.158	0.063
*Chromium	0.292	0.118
*Cyanide	0.158	0.063
*Lead	0.221	0.103
*Nickel	0.434	0.292
Thallium	1.105	0.481
Zinc	0.805	0.331
*Ammonia	105.200	46.240
Hafnium	15.540	7.109
Radium-226	15.780	5.933
Zirconium	15.540	7.109
*TSS	11.840	9.468
*pH	Within the range of 7.5 to 10.0 at all times	

*Regulated Pollutant

THIS PAGE INTENTIONALLY LEFT BLANK

SECTION XII

PRETREATMENT STANDARDS

This section describes the control and treatment technologies for pretreatment of process wastewaters from new sources in the primary zirconium and hafnium subcategory. PSES are designed to prevent the discharge of pollutants which pass through, interfere with, or are otherwise incompatible with the operation of publicly owned treatment works (POTW). The Clean Water Act also requires pretreatment for pollutants, such as toxic metals, that limit POTW sludge management alternatives. New indirect discharge facilities, like new direct discharge facilities, have the opportunity to incorporate the best available demonstrated technologies, including process changes, in-plant controls, and end-of-pipe treatment technologies, and to use plant site selection to ensure adequate treatment system function. Pretreatment standards are to be technology based, analogous to the best available or best demonstrated technology for removal of toxic pollutants. Pretreatment standards for regulated pollutants are presented based on the selected control and treatment technology.

PSES is not being promulgated for the primary zirconium and hafnium subcategory because there are no existing indirect dischargers on this subcategory. However, pretreatment standards for new sources are promulgated.

TECHNICAL APPROACH TO PRETREATMENT

Before proposing and promulgating pretreatment standards, the Agency examines whether the pollutants discharged by the industry pass through the POTW or interfere with the POTW operation or its chosen sludge disposal practices. In determining whether pollutants pass through a well-operated POTW achieving secondary treatment, the Agency compares the percentage of a pollutant removed by POTW with the percentage removed by direct dischargers applying the best available technology economically achievable. A pollutant is deemed to pass through the POTW when the average percentage removed nationwide by well-operated POTW meeting secondary treatment requirements, is less than the percentage removed by direct dischargers complying with BAT effluent limitations guidelines for that pollutant.

This definition of pass-through satisfies two competing objectives set by Congress that standards for indirect dischargers be equivalent to standards for direct dischargers while at the same time, the treatment capability and performance of the POTW be recognized and taken into account in regulating the discharge of pollutants from indirect dischargers.

The Agency compares percentage removal rather than the mass or concentration of pollutants discharged because the latter would not take into account the mass of pollutants discharged to the POTW from non-industrial sources or the dilution of the pollutants in the POTW effluent to lower concentrations due to the addition of large amounts of non-industrial wastewater.

PRETREATMENT STANDARDS FOR EXISTING AND NEW SOURCES

Options for pretreatment of wastewaters from both existing and new sources are based on increasing the effectiveness of end-of-pipe treatment technologies. All in-plant changes and applicable end-of-pipe treatment processes have been discussed previously in Sections X and XI. The options for PSES and PSNS, therefore, are the same as the BAT options discussed in Section X.

A description of each option is presented in Section X, with a more detailed discussion, including pollutants controlled by each treatment process is presented in Section VII of the General Development Document.

Treatment technologies considered for the PSES and PSNS options are:

OPTION A

- o Preliminary treatment with ammonia steam stripping and cyanide precipitation (where required)
- o Chemical precipitation and sedimentation

OPTION C

- o Preliminary treatment with ammonia steam stripping and cyanide precipitation (where required)
- o Chemical precipitation and sedimentation
- o Multimedia filtration

PSES AND PSNS OPTION SELECTION - PROPOSAL

Level A PSES were proposed for plants which only produce zirconium or zirconium-nickel alloys from ZrO_2 reduction with magnesium or calcium hydride. The technology basis for the proposed Level A PSES was preliminary treatment consisting of ammonia steam stripping and cyanide precipitation where necessary, barium chloride co-precipitation, chemical precipitation, sedimentation, and flow reduction. Level B PSES were proposed for all other plants in the subcategory. Level B PSES were based on preliminary treatment consisting of ammonia steam stripping and cyanide precipitation where necessary, barium chloride co-precipitation, chemical precipitation, sedimentation, wastewater flow reduction, and filtration. Flow reduction was based on

percent recycle of scrubber effluent.

EPA proposed PSNS equivalent to PSES, NSPS and BAT. The technology basis for the proposed PSNS was identical to the proposed NSPS.

PSES AND PSNS OPTION SELECTION-PROMULGATION

PSES is not being promulgated at this time because the one indirect discharging facility in this subcategory only has operations which result in relatively clean wastewater. Because little pollutant removal could be expected with treatment, EPA is not promulgating limits for these operations. As such, there are no compliance costs for indirect dischargers.

We are promulgating PSNS equivalent to NSPS and BAT. The technology basis for PSNS is identical to NSPS. The same pollutants pass through as at PSES, for the same reasons. We know of no economically feasible, demonstrated technology that is better than BAT technology.

We believe that the promulgated PSNS are achievable, and that they are not a barrier to entry of new plants into this subcategory.

REGULATED POLLUTANT PARAMETERS

Pollutants selected for limitation, in accordance with the rationale of Sections VI and X, are identical to those selected for limitation for BAT.

PRETREATMENT STANDARDS

Pretreatment standards are based on the treatable concentrations from the selected treatment technology, (Option C), and the discharge rates determined in Section X for BAT, and shown in Table XII-1 (page 5218). A mass of pollutant per mass of product (mg/kg) allocation is given for each subdivision within the subcategory. This pollutant allocation is based on the product of the treatable concentration from the proposed treatment (mg/l) and the production normalized wastewater discharge rate (l/kkg). The achievable treatment concentrations for PSNS are identical to those for BAT. PSNS are presented in Table XII-2 (page 5220).

TABLE XII-1

PSNS WASTEWATER DISCHARGE RATES FOR THE PRIMARY ZIRCONIUM AND HAFNIUM SUBCATEGORY

Wastewater Stream	PSNS Normalized Discharge Rate l/kkg	PSNS Normalized Discharge Rate gal/ton	Production Normalizing Parameter
Sand drying wet air pollution control	379	91	Zircon sand dried
Sand chlorination off-gas wet air pollution control	1,471	353	Crude $ZrCl_4$ produced
Sand chlorination area-vent wet air pollution control	1,962	471	Crude $ZrCl_4$ produced
$SiCl_4$ purification wet air pollution control	865	208	$SiCl_4$ purified
Feed makeup wet air pollution control	634	152	Crude $ZrCl_4$ produced
Iron extraction (MIBK) ste stripper bottoms	2,077	498	Zirconium and hafnium produced
Zirconium filtrate	71,190	17,078	Zirconium produced
Hafnium filtrate	0	0	Hafnium produced
Calcining caustic wet air pollution control	1,786	428	Zirconium and hafnium produced
Pure chlorination wet air pollution control	2,632	631	Zirconium and hafnium produced

TABLE XII-1 (Continued)

PSNS WASTEWATER DISCHARGE RATES FOR THE PRIMARY ZIRCONIUM AND HAFNIUM SUBCATEGORY

Wastewater Stream	PSNS Normalized Discharge Rate l/kkg	PSNS Normalized Discharge Rate gal/ton	Production Normalizing Parameter
Pure chlorination wet air pollution control	38,317	9,204	Zirconium and hafnium produced
Reduction area vent wet air pollution control	3,686	885	Zirconium and hafnium produced
Magnesium recovery off-gas wet air pollution control	20,733	4,980	Zirconium and hafnium produced
Magnesium recovery area-vent wet air pollution control	11,518	2,767	Zirconium and hafnium produced
Zirconium chip crushing wet air pollution control	0	0	Zirconium produced
Acid leachate from zirconium metal production	29,465	7,068	Pure Zirconium produced
Acid leachate from zirconium alloy production	15,771	3,783	Zirconium contained in alloys
Leaching rinse water from zirconium metal production	58,930	14,137	Pure Zirconium produced
Leaching rinse water from zirconium alloy production	789	189	Zirconium contained in alloys

Table XII-2

PSNS FOR THE PRIMARY ZIRCONIUM AND HAFNIUM SUBCATEGORY

(a) Sand Drying Wet Air Pollution Control PSNS

Pollutant or pollutant property	Maximum for any one day	Maximum for monthly average
	mg/kg (lb/million lbs) of zirconium dioxide and hafnium dioxide produced	
Cadmium	0.114	0.045
*Chromium	0.210	0.085
*Cyanide	0.114	0.045
*Lead	0.159	0.074
*Nickel	0.312	0.210
Thallium	0.795	0.346
Zinc	0.579	0.239
*Ammonia	75.710	33.280
Hafnium	11.190	5.118
Radium-226	11.360	4.271
Zirconium	11.190	5.118

(b) Sand Chlorination Off-Gas Wet Air Pollution Control PSNS

Pollutant or pollutant property	Maximum for any one day	Maximum for monthly average
	mg/kg (lb/million lbs) of zirconium dioxide and hafnium dioxide produced	
Cadmium	8.694	3.478
*Chromium	16.080	6.521
*Cyanide	8.694	3.478
*Lead	12.170	5.651
*Nickel	23.910	16.080
Thallium	60.860	26.520
Zinc	44.340	18.260
*Ammonia	5,795.000	2,547.000
Hafnium	856.400	391.700
Radium-226	869.400	326.900
Zirconium	856.400	391.700

*Regulated Pollutant

TABLE XII-2 (Continued)

PSNS FOR THE PRIMARY ZIRCONIUM AND HAFNIUM SUBCATEGORY

(c) Sand Chlorination Area-Vent Wet Air Pollution Control PSNS

Pollutant or pollutant property	Maximum for any one day	Maximum for monthly average
	mg/kg (lb/million lbs) of zirconium dioxide and hafnium dioxide produced	
Cadmium	1.705	0.682
*Chromium	3.154	1.279
*Cyanide	1.705	0.682
*Lead	2.387	1.108
*Nickel	4.688	3.154
Thallium	11.930	5.200
Zinc	8.694	3.580
*Ammonia	1,136.000	499.500
Hafnium	167.900	76.800
Radium-226	170.500	64.100
Zirconium	167.900	76.800

(d) $SiCl_4$ Purification Wet Air Pollution Control PSNS

Pollutant or pollutant property	Maximum for any one day	Maximum for monthly average
mg/kg (lb/million lbs) of zirconium dioxide and hafnium dioxide produced		
Cadmium	1.500	0.600
*Chromium	2.774	1.125
*Cyanide	1.500	0.600
*Lead	2.099	0.975
*Nickel	4.124	2.774
Thallium	10.500	4.574
Zinc	7.648	3.149
*Ammonia	999.500	439.400
Hafnium	147.700	67.560
Radium-226	150.000	56.380
Zirconium	147.700	67.560

*Regulated Pollutant

TABLE XII-2 (Continued)

PSNS FOR THE PRIMARY ZIRCONIUM AND HAFNIUM SUBCATEGORY

(e) Feed Makeup Wet Air Pollution Control PSNS

Pollutant or pollutant property	Maximum for any one day	Maximum for monthly average
	mg/kg (lb/million lbs) of zirconium dioxide and hafnium dioxide produced	
Cadmium	1.137	0.455
*Chromium	2.103	0.852
*Cyanide	1.137	0.455
*Lead	1.591	0.739
*Nickel	3.126	2.103
Thallium	7.956	3.467
Zinc	5.797	2.387
*Ammonia	757.500	333.000
Hafnium	112.000	51.200
Radium-226	113.700	42.740
Zirconium	112.000	51.200

(f) Iron Extraction (MIBK) Steam Stripper Bottoms PSNS

Pollutant or pollutant property	Maximum for any one day	Maximum for monthly average
	mg/kg (lb/million lbs) of zirconium dioxide and hafnium dioxide produced	
Cadmium	0.449	0.180
*Chromium	0.830	0.337
*Cyanide	0.449	0.180
*Lead	0.628	0.292
*Nickel	1.234	0.830
Thallium	3.142	1.369
Zinc	2.289	0.942
*Ammonia	299.100	131.500
Hafnium	44.210	20.220
Radium-226	44.880	16.870
Zirconium	44.210	20.220

*Regulated Pollutant

TABLE XII-2 (Continued)

PSNS FOR THE PRIMARY ZIRCONIUM AND HAFNIUM SUBCATEGORY

(g) Zirconium Filtrate PSNS

Pollutant or pollutant property	Maximum for any one day	Maximum for monthly average
	mg/kg (lb/million lbs) of zirconium dioxide and hafnium dioxide produced	
Cadmium	7.758	3.103
*Chromium	14.350	5.819
*Cyanide	7.758	3.103
*Lead	10.860	5.043
*Nickel	21.330	14.350
Thallium	54.310	23.660
Zinc	39.570	16.290
*Ammonia	5,171.000	2,273.000
Hafnium	764.200	349.500
Radium-226	775.800	291.700
Zirconium	764.200	349.500

(h) Hafnium Filtrate PSNS

Pollutant or pollutant property	Maximum for any one day	Maximum for monthly average
	mg/kg (lb/million lbs) of zirconium dioxide and hafnium dioxide produced	
Cadmium	0.000	0.000
*Chromium	0.000	0.000
*Cyanide	0.000	0.000
*Lead	0.000	0.000
*Nickel	0.000	0.000
Thallium	0.000	0.000
Zinc	0.000	0.000
*Ammonia	0.000	0.000
Hafnium	0.000	0.000
Radium-226	0.000	0.000
Zirconium	0.000	0.000

*Regulated Pollutant

TABLE XII-2 (Continued)

PSNS FOR THE PRIMARY ZIRCONIUM AND HAFNIUM SUBCATEGORY

(i) Calcining Caustic Wet Air Pollution Control PSNS

Pollutant or pollutant property	Maximum for any one day	Maximum for monthly average
	mg/kg (lb/million lbs) of zirconium dioxide and hafnium dioxide produced	
Cadmium	1.799	0.720
*Chromium	3.329	1.350
*Cyanide	1.799	0.720
*Lead	2.519	1.170
*Nickel	4.948	3.329
Thallium	12.600	5.488
Zinc	9.177	3.779
*Ammonia	1,199.000	527.200
Hafnium	177.200	81.060
Radium-226	179.900	67.660
Zirconium	177.200	81.060

(j) Pure Chlorination Wet Air Pollution Control PSNS

Pollutant or pollutant property	Maximum for any one day	Maximum for monthly average
	mg/kg (lb/million lbs) of zirconium and hafnium produced	
Cadmium	7.663	3.065
*Chromium	14.180	5.748
*Cyanide	7.663	3.065
*Lead	10.730	4.981
*Nickel	21.070	14.180
Thallium	53.640	23.370
Zinc	39.080	16.090
*Ammonia	5,108.000	2,245.000
Hafnium	754.800	345.200
Radium.226	766.300	288.100
Zirconium	754.800	345.200

*Regulated Pollutant

TABLE XII-2 (Continued)

PSNS FOR THE PRIMARY ZIRCONIUM AND HAFNIUM SUBCATEGORY

(k) Reduction Area Vent Wet Air Pollution Control PSNS

Pollutant or pollutant property	Maximum for any one day	Maximum for monthly average
	mg/kg (lb/million lbs) of zirconium and hafnium produced	
Cadmium	0.737	0.295
*Chromium	1.364	0.553
*Cyanide	0.737	0.295
*Lead	1.032	0.479
*Nickel	2.027	1.364
Thallium	5.160	2.248
Zinc	3.260	1.548
*Ammonia	491.300	216.000
Hafnium	72.610	33.210
Radium-226	73.720	27.720
Zirconium	72.610	33.210

(l) Magnesium Recovery Off-Gas Wet Air Pollution Control PSNS

Pollutant or pollutant property	Maximum for any one day	Maximum for monthly average
	mg/kg (lb/million lbs) of zirconium and hafnium produced	
Cadmium	4.147	1.659
*Chromium	7.671	3.110
*Cyanide	4.147	1.659
*Lead	5.805	2.695
*Nickel	11.400	7.671
Thallium	29.030	12.650
Zinc	21.150	8.708
*Ammonia	2,764.000	1,215.000
Hafnium	408.400	186.800
Radium-226	414.700	155.900
Zirconium	408.400	186.800

*Regulated Pollutant

TABLE XII-2 (Continued)

PSNS FOR THE PRIMARY ZIRCONIUM AND HAFNIUM SUBCATEGORY

(m) Magnesium Recovery Area Vent Wet Air Pollution Control PSNS

Pollutant or pollutant property	Maximum for any one day	Maximum for monthly average
	mg/kg (lb/million lbs) of zirconium and hafnium produced	
Cadmium	2.304	0.921
*Chromium	4.262	1.728
*Cyanide	2.304	0.921
*Lead	3.225	1.497
*Nickel	6.335	4.262
Thallium	16.130	7.026
Zinc	11.750	4.838
*Ammonia	1,535.000	675.000
Hafnium	226.900	103.800
Radium-226	230.400	86.620
Zirconium	226.900	103.800

(n) Zirconium Chip Crushing Wet Air Pollution Control PSNS

Pollutant or pollutant property	Maximum for any one day	Maximum for monthly average
	mg/kg (lb/million lbs) of zirconium and hafnium produced	
Cadmium	0.000	0.000
*Chromium	0.000	0.000
*Cyanide	0.000	0.000
*Lead	0.000	0.000
*Nickel	0.000	0.000
Thallium	0.000	0.000
Zinc	0.000	0.000
*Ammonia	0.000	0.000
Hafnium	0.000	0.000
Radium-226	0.000	0.000
Zirconium	0.000	0.000

*Regulated Pollutant

TABLE XII-2 (Continued)

PSNS FOR THE PRIMARY ZIRCONIUM AND HAFNIUM SUBCATEGORY

(o) Acid Leachate from Zirconium Metal Production PSNS

Pollutant or pollutant property	Maximum for any one day	Maximum for monthly average
	mg/kg (lb/million lbs) of pure zirconium produced	
Cadmium	5.893	2.357
*Chromium	10.900	4.420
*Cyanide	5.893	2.357
*Lead	8.250	3.830
*Nickel	16.210	10.900
Thallium	41.250	17.970
Zinc	30.050	12.380
*Ammonia	3,928.000	1,727.000
Hafnium	580.500	265.500
Radium-226	589.300	221.600
Zirconium	580.500	265.500

(p) Acid Leachate from Zirconium Alloy Production PSNS

Pollutant or pollutant property	Maximum for any one day	Maximum for monthly average
	mg/kg (lb/million lbs) of zirconium contained in alloys produced	
Cadmium	3.154	1.262
*Chromium	5.835	2.366
*Cyanide	3.154	1.262
*Lead	4.416	2.050
*Nickel	8.674	5.835
Thallium	22.080	9.620
Zinc	16.090	6.624
*Ammonia	2,102.000	924.200
Hafnium	310.700	142.100
Radium-226	315.400	118.600
Zirconium	310.700	142.100

*Regulated Pollutant

TABLE XII-2 (Continued)

PSNS FOR THE PRIMARY ZIRCONIUM AND HAFNIUM SUBCATEGORY

(q) Leaching Rinse Water from Zirconium Metal Production PSNS

Pollutant or pollutant property	Maximum for any one day	Maximum for monthly average
	mg/kg (lb/million lbs) of pure zirconium produced	
Cadmium	11.790	4.714
*Chromium	21.800	8.840
*Cyanide	11.790	4.714
*Lead	16.500	7.661
*Nickel	32.410	21.800
Thallium	82.500	35.950
Zinc	60.110	24.750
*Ammonia	7,855.000	3,453.000
Hafnium	1,161.000	531.000
Radium-226	1,179.000	443.200
Zirconium	1,161.000	531.000

(r) Leaching Rinse Water from Zirconium Alloy Production PSNS

Pollutant or pollutant property	Maximum for any one day	Maximum for monthly average
	mg/kg (lb/million lbs) of zirconium contained in alloys produced	
Cadmium	0.158	0.063
*Chromium	0.292	0.118
*Cyanide	0.158	0.063
*Lead	0.221	0.103
*Nickel	0.434	0.292
Thallium	1.105	0.481
Zinc	0.805	0.331
*Ammonia	105.200	46.240
Hafnium	15.540	7.109
Radium-226	15.780	5.933
Zirconium	15.540	7.109

*Regulated Pollutant

SECTION XIII

BEST CONVENTIONAL POLLUTANT CONTROL TECHNOLOGY

EPA is not promulgating best conventional pollutant control technology (BCT) limitations for the primary zirconium and hafnium subcategory at this time.

THIS PAGE INTENTIONALLY LEFT BLANK