EPA-450/2-89-013

August 1989

LOCATING AND ESTIMATING AIR EMISSIONS FROM SOURCES OF PERCHLOROETHYLENE AND TRICHLOROETHYLENE

By

Claire C. Most

Radian Corporation

Research Triangle Park, North Carolina

Contract Number 68-02-4392

EPA Project Officer: Anne A. Pope

U. S. ENVIRONMENTAL PROTECTION AGENCY

Office Of Air and Radiation

Office Of Air Quality Planning And Standards

Research Triangle Park, North Carolina 27711

This report has been reviewed by the Office of Air Quality Planning and Standards, U. S. Environmental Protection Agency, and has been approved for publication. Mention of trade names or commercial products does not constitute endorsement or recommendation for use.

EPA 450/2-89-013

TABLE OF CONTENTS

Section		Page
1	Purpose of Document	1
	References for Section 1	4
2	Overview of Document Contents	5
3	Background	7
	Trichloroethylene	7
	Nature of Pollutant	7
	Overview of Production and Use	9
	Perchloroethylene	10
	Nature of Pollutant	10
	Overview of Production and Use	13
	References for Section 3	16
4	Emissions from Trichloroethylene and Perchloroethylene Production	17
	Trichloroethylene Production	17
	Process Descriptions	17
	Emissions	22
	Source Locations	27
	Perchloroethylene Production	27
	Process Descriptions	27
	Emissions	31
	Source Locations	35
	References for Section 4	37

TABLE OF CONTENTS (Continued)

Section		Page
5	Emissions from Industries Producing Trichloroethylene or Perchloroethylene as a By-product	39
	Vinylidene Chloride Production	39
	Process Description	39
	Emissions	42
	Source Locations	43
	Ethylene Dichloride/Vinyl Chloride Monomer Production	43
	Process Descriptions	45
	Emissions	50
	Source Locations	54
	References for Section 5	56
6	Emissions from Industries Using Trichloroethylene or Perchloroethylene as Chemical Feedstock	57
	Chlorofluorocarbon Production	57
	Process Description	58
	Emissions	60
	Source Locations	63
	Polyvinyl Chloride (PVC) Production	63
	Process Description	63
	Emissions	67
	Source Locations	69
	References for Section 6	72

TABLE OF CONTENTS (Continued)

Section		Page
7	Emissions from Industries Using Trichloroethylene and Perchloroethylene as Solvent	75
	Trichloroethylene and Perchloroethylene Use in Organic Solvent Cleaning	75
	Process Description	75
	Emissions	77
	Source Locations	84
	Dry Cleaning	84
	Process Description	85
	Emissions	87
	Source Locations	88
	Paints, Coatings, and Adhesives	90
	Aerosols	91
	References for Section 7	92
8	Other Potential Sources of Trichloroethylene and Perchloroethylene Emissions	95
	Distribution Facilities	95
	Publicly Owned Treatment Works (POTWs)	97
	Unidentified or Miscellaneous Sources of Trichloroethylene and Perchloroethylene	98
	References for Section 8	100
9	Source Test Procedures	103
	References for Section 9	105
APPENDIX A - Derivation of Emission Factors		A-1

LIST OF TABLES

Table		Page
1	Physical and Chemical Properties of Trichloroethylene	8
2	Physical and Chemical Properties of Perchloroethylene	12
3	Trichloroethylene and Perchloroethylene Emission Factors for an Existing Plant Producing Trichloroethylene by Ethylene Dichloride Chlorination	25
4	Trichloroethylene and Perchloroethylene Emission Factors for an Existing Plant Producing Trichloroethylene and Perchloroethylene by Ethylene Dichloride Oxychlorination	26
5	Domestic Producers of Trichloroethylene in 1988	28
6	Emission Factors for the Release of Perchloroethylene from Perchloroethylene Production by Ethylene Dichloride Chlorination	33
7	Emission Factors for the Release of Perchloroethylene from Perchloroethylene Production by Hydrocarbon Chlorinolysis Process	34
8	Domestic Producers of Perchloroethylene in 1988	36
9	Domestic Producers of Vinylidene Chloride in 1988	44
10	Trichloroethylene and Perchloroethylene Emission Factors for Three Plants Producing Ethylene Dichloride/Vinyl Chloride Monomer	53
11	Domestic Producers of Vinyl Chloride Monomer in 1988	55
12	Estimated Controlled and Uncontrolled Perchloroethylene Emission Factors for Existing Facilities Producing Chlorofluorocarbon 113 and 114	62
13	Facilities Producing Chlorofluorocarbons 113, 114, 115, and/or 116 in 1988	64
14	Potential Emission Controls for PVC Plants	68
15	Facilities Producing Polyvinyl Chloride Resins in 1988	70

LIST OF TABLES (Continued)

Table		Page
16	Trichloroethylene and Perchloroethylene Emission Factors for Organic Solvent Cleaning: Schedule A.....	80
17	Trichloroethylene and Perchloroethylene Emission Factors for Organic Solvent Cleaning: Schedule B.....	82
18	Emission Factors for the Perchloroethylene Dry Cleaning Industry	89
19	Summary of Major Trichloroethylene and Perchloroethylene Distributors	96
A-1	Trichloroethylene and Perchloroethylene Emission Factors for Equipment Leaks from Selected Production Processes	A-6

LIST OF FIGURES

Figure		Page
1	Chemical use tree for trichloroethylene	11
2	Chemical use tree for perchloroethylene	15
3	Basic operations that may be used for trichloroethylene (TCE) and perchloroethylene (PCE) production by ethylene dichloride (EDC) chlorination	19
4	Basic operations that may be used for trichloroethylene (TCE) and perchloroethylene (PCE) production by ethylene dichloride (EDC) oxychlorination	21
5	Basic operations that may be used for the production of perchloroethylene by hydrocarbon chlorinolysis	30
6	Basic operations that may be used for vinylidene chloride production from 1,1,2-trichloroethane	41
7	Basic operations that may be used for ethylene dichloride production by the balanced process, with air-based oxychlorination	46
8	Basic operations that may be used for ethylene dichloride production by the oxygen process (oxychlorination step) .	49
9	Basic operations that may be used for vinyl chloride production by ethylene dichloride dehydrochlorination ...	51
10	Basic operations that may be used in the production of CFC-113 and CFC-114	59
11	Basic operations for polyvinyl chloride production by suspension process using trichloroethylene as a reaction chain transfer agent	65
12	Schematic of a perchloroethylene dry cleaning plant	86
13	Integrated bag sampling train	104

SECTION 1
PURPOSE OF DOCUMENT

The Environmental Protection Agency and State and local air pollution control agencies are becoming increasingly aware of the presence of substances in the ambient air that may be toxic at certain concentrations. This awareness, in turn, has led to attempts to identify source/receptor relationships for these substances and to develop control programs to regulate emissions. Unfortunately, very little information is available on the ambient air concentrations of these substances or on the sources that may be discharging them to the atmosphere.

To assist groups interested in inventorying air emissions of various potentially toxic substances, EPA is preparing a series of documents such as this that compiles available information on sources and emissions of these substances. Prior documents in the series are listed below:

Substance	EPA Publication Number
Acrylonitrile	EPA-450/4-84-007a
Carbon Tetrachloride	EPA-450/4-84-007b
Chloroform	EPA-450/4-84-007c
Ethylene Dichloride	EPA-450/4-84-007d
Formaldehyde	EPA-450/4-84-007e
Nickel	EPA-450/4-84-007f
Chromium	EPA-450/4-84-007g
Manganese	EPA-450/4-84-007h
Phosgene	EPA-450/4-84-007i
Epichlorohydrin	EPA-450/4-84-007j
Vinylidene Chloride	EPA-450/4-84-007k
Ethylene Oxide	EPA-450/4-84-007l
Chlorobenzenes	EPA-450/4-84-007m

Substance	EPA Publication Number
Polychlorinated Biphenyls (PCBs)	EPA-450/4-84-007n
Polycyclic Organic Matter (POM)	EPA-450/4-84-007p
Benzene	EPA-450/4-84-007q

This document deals specifically with trichloroethylene and perchloroethylene. Its intended audience includes Federal, State and local air pollution personnel and others who are interested in locating potential emitters of these compounds and making gross estimates of air emissions therefrom.

Because of the limited amounts of data available on some potential sources of trichloroethylene and perchloroethylene emissions, and since the configurations of many sources will not be the same as those described herein, this document is best used as a primer to inform air pollution personnel about (1) the types of sources that may emit trichloroethylene and perchloroethylene, (2) process variations and release points that may be expected within these sources, and (3) available emissions information indicating the potential for trichloroethylene or perchloroethylene to be released into the air from each operation.

The reader is strongly cautioned against using the emissions information contained in this document to try to develop an exact assessment of emissions from any particular facility. Because insufficient data are available to develop statistical estimates of the accuracy of these emission factors, no estimate can be made of the error that could result when these factors are used to calculate emissions from any given facility. It is possible, in some extreme cases, that order-of-magnitude differences could result between actual and calculated emissions, depending on differences in source configurations, control equipment, and operating practices. Thus, in situations where an accurate assessment of trichloroethylene or perchloroethylene emissions is necessary, source-specific information should be obtained to confirm the existence of particular emitting operations, the

types and effectiveness of control measures, and the impact of operating practices. A source test and/or material balance should be considered as the best means to determine air emissions directly from an operation.

In addition to the information presented in this document, another potential source of emissions data for perchloroethylene and trichloroethylene is the Toxic Chemical Release Inventory (TRI) form required by Section 313 of Title III of the Superfund Amendments and Reauthorization Act of 1986 (SARA 313).[1] SARA 313 requires owners and operators of certain facilities that manufacture, import, process or otherwise use certain toxic chemicals to report annually their releases of these chemicals to any environmental media. As part of SARA 313, EPA provides public access to the annual emissions data. The TRI data include general facility information, chemical information, and emissions data. Air emissions data are reported as total facility release estimates, broken out into fugitive and point components. No individual process or stack data are provided to EPA. The TRI requires the use of available stack monitoring or measurement of emissions to comply with SARA 313. If monitoring data are unavailable, emissions are to be quantified based on best estimates of releases to the environment. The reader is cautioned that the TRI will not likely provide facility, emissions, and chemical release data sufficient for conducting detailed exposure modeling and risk assessment. In many cases, the TRI data are based on annual estimates of emissions (i.e., on emission factors, material balances, engineering judgment). The reader is urged to obtain TRI data in addition to information provided in this document to locate potential emitters of perchloroethylene and trichloroethylene, and to make preliminary estimates of air emissions from these facilities. To obtain an exact assessment of air emissions from processes at a specific facility, source tests or detailed material balance calculations should be conducted, and detailed plant site information should be compiled.

For each major industrial source category described in Sections 4 through 8, example process descriptions and flow diagrams are given, potential emission points are identified, and available emission factor estimates are presented that show the potential for trichloroethylene and perchloroethylene emissions before and after controls employed by industry. Individual companies are named that are reported to be involved with either the production or use of trichloroethylene or perchloroethylene based primarily on trade publications.

The final section of this document summarizes available procedures for source sampling and analysis of trichloroethylene and perchloroethylene. Details are not prescribed nor is any EPA endorsement given or implied to any of these sampling and analysis procedures. At this time, EPA has not generally evaluated these methods. Consequently, this document merely provides an overview of applicable source sampling procedures, citing references for those interested in conducting source tests.

This document does not contain any discussion of health or other environmental effects of trichloroethylene or perchloroethylene, nor does it include any discussion of ambient air levels or ambient air monitoring techniques.

Comments on the contents or usefulness of this document are welcomed, as is any information on process descriptions, operating practices, control measures and emissions information that would enable EPA to improve its contents. All comments should be sent to:

Chief, Pollutant Characterization Section (MD-15)
Noncriteria Pollutant Programs Branch
U.S. Environmental Protection Agency
Research Triangle Park, N.C. 27711

SECTION 3
BACKGROUND

TRICHLOROETHYLENE

Nature of Pollutant

Trichloroethylene (TCE) is a colorless, sweet smelling, nonflammable liquid at normal temperatures and pressures. Trichloroethylene is also known as ethylene trichloride, trichloroethene, and trichlor. The structure of TCE is illustrated below:

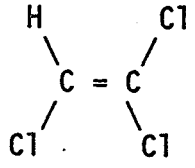

Physical and chemical properties of trichloroethylene are presented in Table 1.

Trichloroethylene is miscible with most organic liquids including such common solvents as ether, alcohol, and chloroform, but is essentially insoluble in water. It is relatively volatile, with a vapor pressure of 7.6 kPa at 20°C.[1] The lower explosive limit of the vapor in air is 11 percent, and the upper explosive limit is 41 percent.[2] The liquid does not have a flash point.[1,2]

Trichloroethylene decomposes by atmospheric oxidation and degradation catalyzed by aluminum chloride.[1] The decomposition products include compounds that are acidic and corrosive, such as hydrochloric acid. To prevent decomposition, commercial grades of TCE contain stabilizers such as amines, neutral inhibitor mixtures, and/or epoxides.[1]

TABLE 1. PHYSICAL AND CHEMICAL PROPERTIES OF TRICHLOROETHYLENE

Property	Value
Structural Formula: C_2HCl_3, $CHCl = CCl_2$	
Molecular weight	131.39
Melting point, ^oC	-87.1
Boiling point, ^oC	86.7
Density at 20^oC, g/mL	1.465
Vapor pressure at 20^oC, kPa (mmHg)	7.6 (57)
Viscosity (absolute) at 20^oC, mPa S (=cP)	0.58
Surface tension at 25^oC, mN/m (=dyn/cm)	26.4
Flash point (closed cup), ^oC	None
Upper explosive limit in air, % by volume	41
Lower explosive limit in air, % by volume	11
Heat of formation, liquid, MJ/(kg mol)	4.18
Heat of formation, vapor, MJ/(kg mol)	-29.3
Heat of combustion, MJ/kg	7.325
Solubility in water at 20^oC, g/100g water	0.107
Solubility of water in trichloroethylene at 20^oC, g/100g trichloroethylene	0.0225

SOURCE: References 1 and 2.

The lifetime of TCE in the atmosphere is slightly over four days, where atmospheric lifetime is defined as the time required for the concentration to decay to 1/e (37%) of its original value.[3] This relatively short lifetime indicates that TCE is not a persistent atmospheric compound; however, it is continually released to the atmosphere. The relatively short lifetime of TCE should prevent long-range global transport of significant levels of TCE. The major mechanism for destruction of TCE in the atmosphere is reaction with hydroxyl radicals.[3,4] Some of the anticipated degradation products include phosgene, dichloroacetyl chloride, and formyl chloride.[3]

Overview of Production and Use

The commercial production of trichloroethylene began in the United States in 1925 for use as a metal degreasing and dry cleaning agent.[1] Trichloroethylene is currently produced in the United States by two companies at two manufacturing sites.[5] Domestic production in 1987 was about 91,000 Mg. Approximately 23,000 Mg of trichloroethylene were exported and 4,500 Mg imported.[5] Trichloroethylene production demand is expected to decrease because of improved industry recycling practices involving TCE and the availability of inexpensive imports. Since 1980, imports have risen steadily and exports have fallen.

Trichloroethylene is produced domestically by two processes: (1) direct chlorination of ethylene dichloride, and (2) oxychlorination of ethylene dichloride. By varying raw material ratios, trichloroethylene can be produced separately or as a coproduct of perchloroethylene (PCE).[1,6] Of the two companies currently producing TCE, one company produces TCE separately using the direct chlorination process (PCE is produced as a by-product); the other produces TCE and PCE as coproducts using the oxychlorination process.[7,8] Trichloroethylene may also be produced as a by-product during vinylidene chloride or ethylene dichloride/vinyl chloride monomer manufacture.[7]

Figure 1 presents a chemical use tree summarizing the production and use of TCE. The major end use of TCE is as an organic solvent for industrial degreasing; about 85 percent of the TCE supply is used in vapor degreasing and another 5 percent is used in cold cleaning.[5] These processes are used in many industrial processes such as the manufacture of automobiles, electronics, furniture, appliances, jewelry, and plumbing fixtures.[7]

Approximately five percent of the TCE supply is used as a chain-length modifier in the production of polyvinyl chloride (PVC).[5] The remaining TCE (5 percent) is consumed in other solvent and miscellaneous applications. These applications include use (1) as a solvent in adhesive formulations; (2) as a solvent in paints and coatings; and (3) in miscellaneous chemical synthesis and solvent applications.[5,7]

PERCHLOROETHYLENE

Nature of Pollutant

Perchloroethylene (PCE) is a colorless, nonflammable liquid with an ethereal odor.[2,9] The chemical name for perchloroethylene is tetrachloroethylene; it is also known as tetrachloroethene and perc. The structure of PCE is illustrated below:

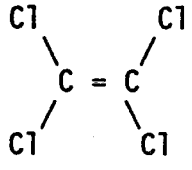

Perchloroethylene is practically insoluble in water, but is miscible with the chlorinated organic solvents and most other common solvents such as ethanol, diethyl ether, and oils. It is a solvent for many substances, including fats, oils and tars.[9] At 20°C, PCE has a vapor pressure of 1.87 kPa (14 mmHg).[2] Table 2 summarizes the physical and chemical properties of PCE.

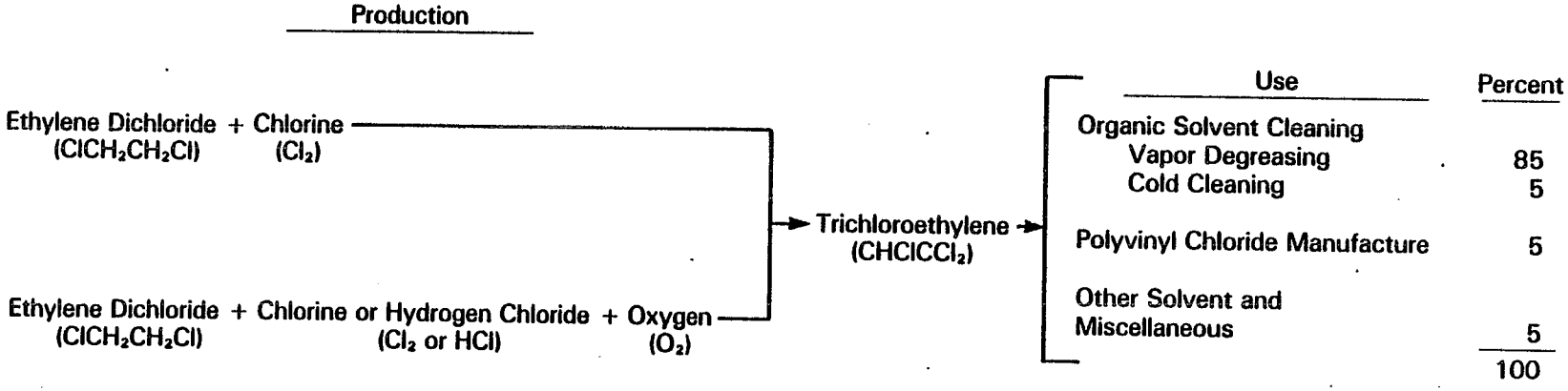

Figure 1. Chemical use tree for trichloroethylene.[5,7]

1181738R

TABLE 2. PHYSICAL AND CHEMICAL PROPERTIES OF PERCHLOROETHYLENE

Property	Value
Structural Formula: C_2Cl_4, $Cl_2C = CCl_2$	
Molecular weight	165.83
Melting point, ^oC	-22.7
Boiling point, ^oC	121.2
Density at 20^oC, g/mL	1.62260
Vapor pressure at 20^oC, kPa (mmHg)	1.87 (14)
Viscosity at 25^oC, mPa S (=cP)	0.839
Surface tension at 15^oC, mN/m (=dyn/cm)	32.86
Heat of formation, liquid, kJ/(mol)	12.5
Heat of formation, vapor, kJ/(mol)	-25
Heat of combustion at constant pressure with formation of aq HCl, kJ/(mol)	679.9
Solubility in water at 25^oC, mg/100g water	15
Solubility of water in perchloroethylene at 25^oC, mg/120g perchloroethylene	8

SOURCE: References 2 and 9.

In the presence of light and air, perchloroethylene slowly autooxidizes to trichloroacetyl chloride. Stabilizers, such as amines or phenols, inhibit the decomposition process to extend solvent life and protect equipment and materials. Compared to other chlorinated ethanes and ethylenes, PCE is relatively stable, and generally requires only small amounts of stabilizers.[9]

The major mechanism that removes perchloroethylene from the air is reaction with hydroxyl radicals.[3,4] The degradation products include phosgene and chloroacetyl chlorides. The atmospheric lifetime of PCE is estimated to range from 119 to 251 days, where atmospheric lifetime is defined as the time required for the concentration to decay to 1/e (37%) of its original value.[3] The relatively long lifetime of PCE in the atmosphere suggests that long-range global transport is likely. Monitoring data have shown the presence of PCE in the atmosphere worldwide and at locations removed from anthropogenic emission sources. Removal of PCE from the air can also occur by washout.

Overview of Production and Use

Perchloroethylene was first prepared in 1821 by Faraday from hexachloroethane.[9] Industrial production began in the United States in about 1925. Perchloroethylene is currently produced by four companies at six locations. The total domestic production was about 200,000 Mg in 1987.[10] The total imports of PCE in 1987 were 54,000 Mg/yr, and the total exports were 27,000 Mg/yr.[10] Perchloroethylene production demand is expected to remain the same or decline slightly over the long term.

Perchloroethylene is produced domestically by three processes. These are (1) the direct chlorination of ethylene dichloride, (2) the oxychlorination of ethylene dichloride, and (3) hydrocarbon chlorinolysis. In the first two processes, PCE can be produced separately or as a coproduct of TCE with the raw material ratios determining the proportions of PCE and TCE.[6] In the third process, PCE is manufactured as a coproduct with carbon

tetrachloride.[11] Perchloroethylene may also be formed as a by-product during ethylene dichloride/vinyl chloride monomer manufacture.[8] Perchloroethylene is produced in purified, technical, USP, and spectrometric grades. The various grades are produced for dry cleaning, technical, industrial, and vapor-degreasing uses, respectively.

The current uses of PCE are listed in Figure 2, along with the percentage of the total product devoted to each use. Perchloroethylene is commercially important primarily as a chlorinated hydrocarbon solvent and as a chemical intermediate. The major end use of PCE is as a dry cleaning solvent. Perchloroethylene largely replaced carbon tetrachloride (which is no longer used) in commercial, coin-operated, industrial and garment-rental dry cleaning operations. Some PCE is also used in textile processing as a scouring solvent and as a carrier solvent. Together these uses account for about 50 percent of total domestic demand for PCE.[10] Approximately 25 percent of the PCE supply is used as a chemical intermediate in chlorofluorocarbon production (mostly for chlorofluorocarbon 113).[10] Another 15 percent is consumed in organic solvent cleaning operations such as vapor degreasing and metal cleaning.[10] The remaining 10 percent of the PCE supply is primarily consumed in other solvent applications. These applications include use (1) as a solvent in paints, coatings, and adhesives, (2) as a solvent in aerosol formulations, and (3) in miscellaneous solvent applications.[8]

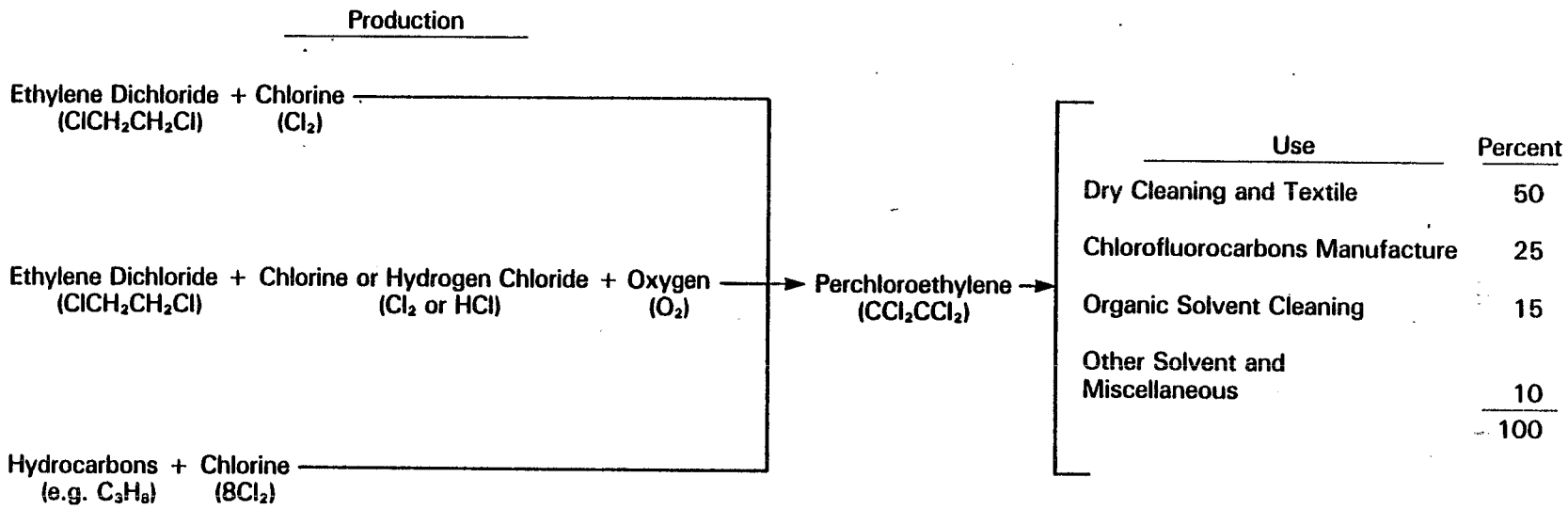

Figure 2. Chemical use tree for perchloroethylene.[7,8,10]

1181739R

REFERENCES FOR SECTION 3

1. McNeill, W. C., Jr. Trichloroethylene. (In) Encyclopedia of Chemical Technology, 3rd ed. Volume 5. R. E. Kirk, D. F. Othmer, M. Grayson, and D. Eckroth, eds. John Wiley and Sons, New York, New York. 1978. pp. 745-753.

2. U.S. Department of Health and Human Services. NIOSH Pocket Guide to Chemical Hazards. DHHS (NIOSH) Publication No. 85-114. National Institute for Occupational Safety and Health, Cincinnati, Ohio. 1985.

3. Cupitt, L. T. Atmospheric Persistence of Eight Air Toxics. EPA/600/3-87-004. U.S. Environmental Protection Agency, Research Triangle Park, North Carolina. 1987.

4. Cupitt, L. T. Fate of Toxic and Hazardous Materials in the Air Environment. EPA-600/3-80-084. U.S. Environmental Protection Agency, Research Triangle Park, North Carolina. 1980.

5. Mannsville Chemical Products Corp. Chemical Products Synopsis - Trichloroethylene. Asbury Park, New Jersey. 1987.

6. Standifer, R. L., and J. A. Key. Report 4: 1,1,1-Trichloroethane and Perchloroethylene, Trichloroethylene, and Vinylidine Chloride. (In) Organic Chemical Manufacturing, Volume 8: Selected Processes. EPA-450/3-80-28c. U.S. Environmental Protection Agency, Research Triangle Park, North Carolina. 1980. pp. III-8 to III-14.

7. U.S. Environmental Protection Agency. Survey of Trichloroethylene Emission Sources. EPA-450/3-85-021. Office of Air Quality Planning and Standards, Research Triangle Park, North Carolina. 1985.

8. U.S. Environmental Protection Agency. Survey of Perchloroethylene Emissions Sources. EPA-450/3-85-017. Office of Air Quality Planning and Standards, Research Triangle Park, North Carolina. 1985.

9. Keil, S. L. Tetrachloroethylene. (In) Encyclopedia of Chemical Technology, 3rd ed. Volume 5. R. E. Kirk, D. F. Othmer, M. Grayson, and D. Eckroth, eds. John Wiley and Sons, New York, New York. 1978. pp. 754-762.

10. Mannsville Chemical Products Corp. Chemical Products Synopsis - Perchloroethylene. Asbury Park, New Jersey. 1987.

11. Hobbs, F. D., and C. W. Stuewe. Report 2: Carbon Tetrachloride and Perchloroethylene by the Hydrocarbon Chlorinolysis Process. (In) Organic Chemical Manufacturing, Volume 8: Selected Processes. EPA-450/3-80-28c. U.S. Environmental Protection Agency, Research Triangle Park, North Carolina. 1980. pp. III-1 to III-4.

SECTION 4
EMISSIONS FROM TRICHLOROETHYLENE AND PERCHLOROETHYLENE PRODUCTION

Sources of atmospheric emissions of trichloroethylene and perchloroethylene related to their production are described in this section. Process flow diagrams are included as appropriate and the specific streams or vents in the figures are labeled to correspond to the discussion in the text. Emission factors for the production processes are presented when available and control technologies are described. It is advisable for the reader to contact specific sources in question to verify the nature of the process used, production volume, and control techniques in place before applying any of the emission factors presented in this report.

TRICHLOROETHYLENE PRODUCTION

Trichloroethylene (TCE) is currently produced domestically by either direct chlorination or oxychlorination of ethylene dichloride (EDC) or other chlorinated ethanes. Trichloroethylene, $Cl_2C=CHCl$, can be produced separately or as a coproduct of perchloroethylene (PCE), $Cl_2C=CCl_2$, by varying raw material ratios.[1]

Trichloroethylene was once manufactured predominantly by the chlorination of acetylene. However, because of the high cost of acetylene, EDC chlorination became the preferred method for producing TCE. No domestic plants currently use the acetylene-based process to produce TCE.[2]

Process Descriptions

Ethylene Dichloride Chlorination Process--

The major products of the EDC chlorination process are TCE and PCE. Hydrogen chloride (HCl) is produced as a by-product. The direct chlorination process involves the reaction of EDC with chlorine to yield a

crude product from which marketable-grade TCE and PCE are derived following distillation and purification. The EDC/chlorine ratio determines which product (TCE or PCE) will be produced in the greatest quantity. The following chemical equation characterizes the EDC chlorination process:

$$\underset{\text{EDC}}{ClCH_2CH_2Cl} + \underset{\text{Chlorine}}{Cl_2} \xrightarrow[1\text{ atm}]{400\text{-}450^{o}} HCl + \underset{\text{TCE}}{Cl_2CCHCl} + \underset{\text{PCE}}{Cl_2CCCl_2}$$

Basic operations that may be used in the production of TCE and PCE by EDC chlorination are shown in Figure 3. Ethylene dichloride (Stream 1) and chlorine (Steam 2) vapors are fed to a chlorination reactor. The chlorination is carried out at a high temperature (400 to 450°C), slightly above atmospheric pressure, without the use of a catalyst. Other chlorinated C_2 hydrocarbons or recycled chlorinated hydrocarbon by-products may be fed to the chlorinator.[1]

The product stream from the chlorination reaction consists of a mixture of chlorinated hydrocarbons and HCl. Hydrogen chloride (Steam 3) is separated from the chlorinated hydrocarbon mixture (Steam 4) and used in other processes. The chlorinated hydrocarbon mixture (Stream 4) is neutralized with sodium hydroxide solution (Stream 5) and is then dried. Spent caustic is transferred to a wastewater treatment plant.[1]

The dried crude product (Stream 7) is separated by a PCE/TCE column into crude TCE (Stream 8) and crude PCE (Stream 9). The crude TCE (Stream 8) is fed to a TCE column, where light ends (Stream 10) are removed overhead. Bottoms from this column (Stream 11), containing TCE and heavies, are sent to the finishing column, where TCE (Stream 12) is removed overhead and sent to TCE storage. Heavy ends (Stream 13) are combined with light ends (Stream 10) from the TCE column and stored for eventual recycling.[1]

The crude PCE (Stream 9) from the PCE/TCE column is fed to a PCE column, where PCE (Stream 14) goes overhead to PCE storage. Bottoms from

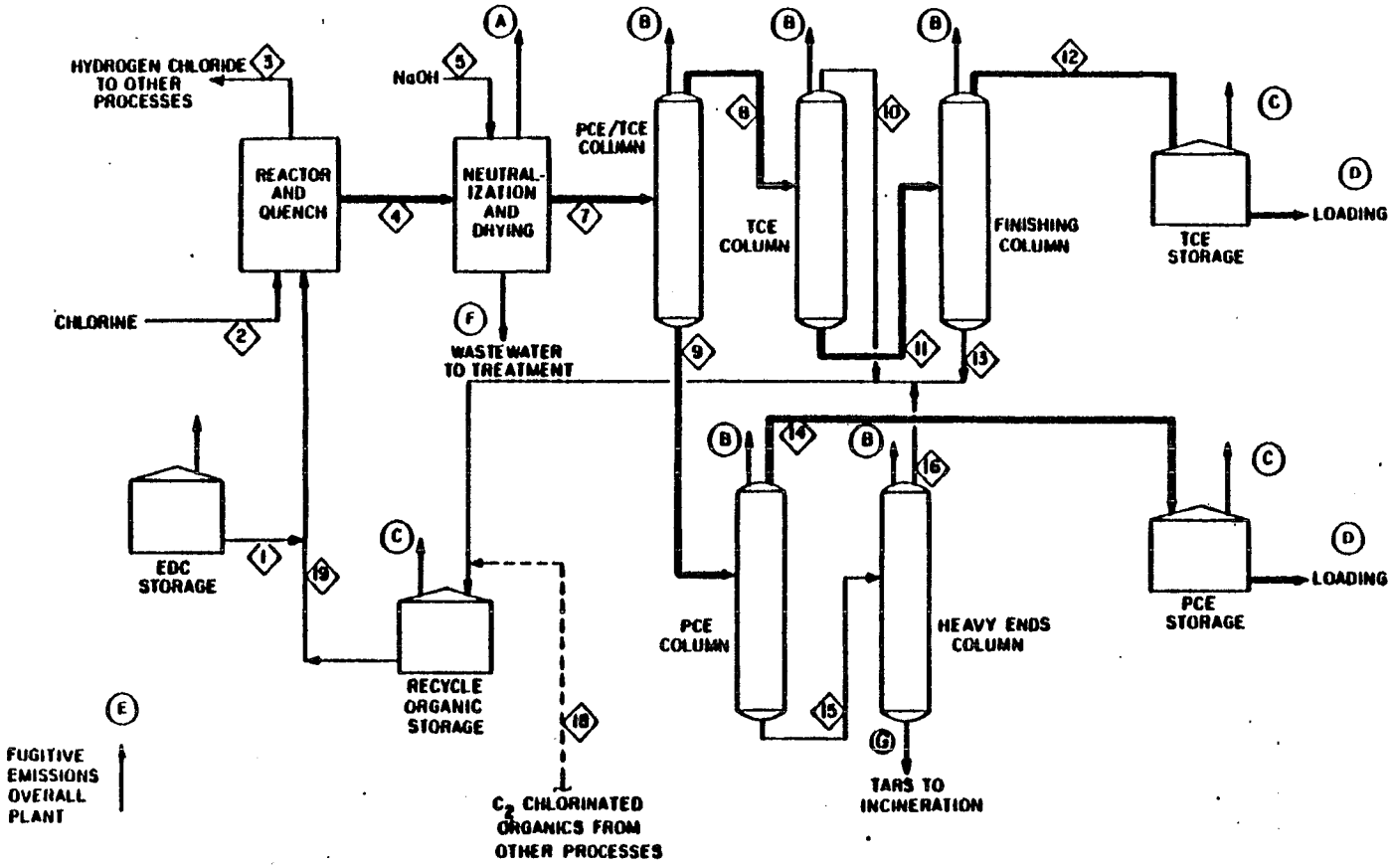

NOTE: The numbers in this figure refer to process streams, as discussed in the text, and the letters designate process vents. The heavy lines represent final product streams through the process.

Figure 3. Basic operations that may be used for trichloroethylene (TCE) and perchloroethylene (PCE) production by ethylene dichloride (EDC) chlorination. [1]

this column (Steam 15) are fed to a heavy ends column. Overheads from the heavy ends column (Stream 16) are recycled and bottoms, consisting of tars, are incinerated.[1]

Ethylene Dichloride Oxychlorination Process--

The major products of the EDC oxychlorination process are TCE, PCE, and water. Side reactions produce carbon dioxide, hydrogen chloride, and several chlorinated hydrocarbons. The EDC oxychlorination process is based on the use of a single step oxychlorination where EDC is reacted with chlorine and/or HCl to from TCE and PCE. This reaction can be illustrated by the following chemical equation:

$$ClCH_2CH_2Cl + Cl_2 + HCl + O_2 \xrightarrow[CuCl_2]{430^oC} Cl_2CCHCl + H_2O + Cl_2CCCl_2$$

EDC TCE PCE

The crude product contains 85 to 90 weight percent PCE plus TCE and 10 to 15 weight percent by-product organics. Essentially all by-product organics are recovered during purification and are recycled to the reactor. The process is very flexible, so that the reaction can be directed toward the production of either PCE or TCE in varying proportions by adjusting the EDC to HCl/Cl_2 ratio.[1]

Figure 4 shows basic operations that may be used for EDC oxychlorination. Ethylene dichloride (Stream 1), chlorine or hydrogen chloride (Steam 2), oxygen (Stream 3), and recycled by-products are fed to a fluid-bed reactor in the gas phase. The reactor contains a vertical bundle of tubes with boiling liquid outside the tubes to maintain the reaction temperature at about 425°C. The reaction takes place at pressures slightly above atmospheric. Copper chloride catalyst is added continuously to the tube bundle. The reactor product (Stream 4) is fed to a water-cooled condenser and then a refrigerated condenser. Condensed material and catalyst fines drain to a decanter. The noncondensed inert gases

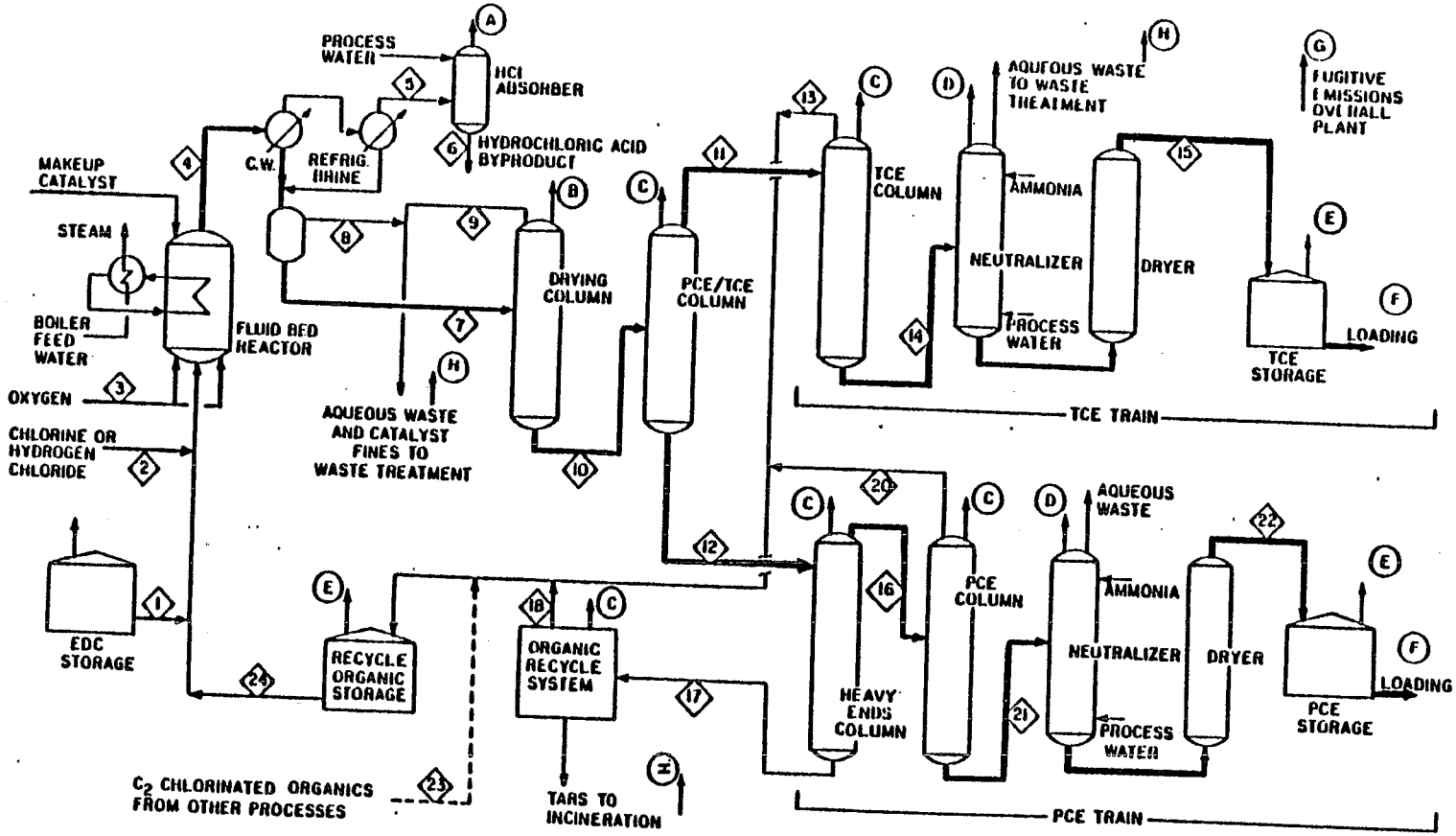

NOTE: The numbers in this figure refer to process streams, as discussed in the text, and the letters designate process vents. The heavy lines represent final product streams through the process.

Figure 4. Basic operations that may be used for trichloroethylene (TCE) and perchloroethylene (PCE) production by ethylene dichloride (EDC) oxychlorination. [1]

(Stream 5), consisting of carbon dioxide, hydrogen chloride, nitrogen, and a small amount of uncondensed chlorinated hydrocarbons, are fed to a hydrogen chloride absorber, where HCl is recovered by absorption in process water to make by-product hydrochloric acid. The remaining inert gases are purged (Vent A).[1]

In the decanter, the crude product (Stream 7) is separated from an aqueous phase. The aqueous phase, containing catalyst fines (Stream 8), is sent to a waste treatment plant (G). Crude product is fed to a drying column where dissolved water is removed by azeotropic distillation. The water (Stream 9) from the drying column is sent to the waste treatment plant (G) and the dried crude product (Stream 10) is separated into crude TCE (Stream 11) and crude PCE (Stream 12) in a PCE/TCE column.[1]

Crude TCE (Steam 11) is sent to a TCE column, where the light ends (Stream 13) are removed overhead and stored for recycle. The bottoms (Stream 14) are neutralized with ammonia and then dried to produce finished TCE (Stream 15), which is sent to storage.[1]

The crude PCE (Stream 12) from the PCE/TCE is fed to a heavy ends column where PCE and light ends (Stream 16) are removed overhead. Heavy ends (Stream 17), called "hex wastes," are sent to an organic recycle system, where the organics that can be recycled (Stream 18) are separated from tars, which are incinerated. The PCE and light ends (Stream 16) from the heavies column are fed to a PCE column, where the light ends (Stream 20) are removed overhead and sent to the recycle organic storage tank. The PCE bottoms (Stream 21) are neutralized with ammonia and then dried to produce finished PCE (Stream 22) which is sent to storage.[1]

Emissions

The major sources of emissions from EDC chlorination are storage tanks, equipment leaks (fugitives) and handling operations. Other potential sources of emissions include process vents, equipment openings, and

secondary sources. Potential sources of TCE and PCE process emissions for the EDC chlorination process (see Figure 3) are the neutralization and drying area vent (Vent A), which releases inert gases from the chlorine and EDC feeds, and the distillation column vents (Vents B), which release noncondensible gases. Storage emission sources (Vents C) include recycle storage and product storage. Handling emissions (Vents D) can occur during loading into drums, tank trucks, tank cars, barges, or ships for shipment. The majority of emissions from production of TCE and PCE from EDC chlorination result from process fugitives or equipment leaks. Fugitive emissions (E) occur when leaks develop in valves or in pump seals. When process pressures are higher than the cooling-water pressure, VOCs can leak into the cooling water and escape as fugitive emissions from the quench area. One company reported that contaminant and immediate pickup procedures are practiced to control fugitives. Secondary emissions can occur when wastewater containing VOCs (including TCE and PCE) is sent to a wastewater treatment system or lagoon and the VOCs evaporate (F). Another source of secondary emissions is the combustion of tars in the incinerator where VOCs are emitted with the flue gases (G).[1,3]

The major sources of emissions from EDC oxychlorination are equipment leaks (fugitives) and secondary sources. Other potential emission sources include process vents, storage tanks, handling operations, and relief device discharges. In the EDC oxychlorination process (see Figure 4), the hydrogen chloride absorber vent (Vent A), which releases the inert gases from the oxygen, chlorine, and hydrogen chloride feeds, is a potential source of EDC process emissions. Other potential sources of EDC process emissions are the drying column vent (Vent B) and the distillation column vents (Vents C), which release primarily noncondensible gases, and the TCE and the PCE neutralizer vents (Vents D), which relieve excess pressure of the nitrogen pads on the systems. The process vents are typically controlled by water scrubbers, and the relief vent is uncontrolled. Storage emission sources (Vents E) are recycle storage and product storage tanks. At one facility, the storage tanks are fixed roof tanks that range in size from

13,500 gallons to 430,000 gallons with an average size of 55,000 gallons. The tanks are controlled by condensers with reported efficiencies ranging from 75 to 77 percent. Handling emissions (F) can occur during product loading into drums, tank trucks, tank cars, barges, or ships for shipment. All of the handling operations except drum handling are controlled by submerged pipe filling technology. Fugitive emissions (G) occur when leaks develop in valves or in pump seals. Some of the fugitive emissions resulting from pressure relief valves are controlled by rupture disks at one facility. Secondary emissions (H and I) occur as described above for the chlorination process (see Vents F and G in Figure 3). No controls are reported for reducing secondary emissions.[1,3]

Table 3 presents TCE and PCE emission factors for the only existing plant producing TCE by the EDC chlorination process (PCE is produced as a by-product only). Table 4 presents TCE and PCE emission factors for the only existing plant producing TCE and PCE as coproducts by the EDC oxychlorination process. Each table lists various emission sources, the control techniques used to reduce emissions from each source, and the corresponding emission factor. The emission factors were derived from estimates of the annual emission rate and the total production capacity for each plant in 1983.[3,4,5] As such, the factors reflect the overall level of control at each plant in 1983. The EPA does not have more recent data on emissions or control devices at these plants.

The controls currently used at each plant may differ. For example, process vent emissions could be reduced by as much as 98 percent through incineration. Fugitive emissions could be reduced through an inspection/maintenance (I/M) program. Storage tank emissions could be reduced by installing internal floating roof tanks with primary and/or secondary seals and by adding a refrigerated condenser system. The reader is encouraged to contact plant personnel to confirm the existence of emitting operations and control technology at a particular facility prior to estimating emissions therefrom.

TABLE 3. TRICHLOROETHYLENE AND PERCHLOROETHYLENE EMISSION FACTORS FOR AN EXISTING PLANT PRODUCING TRICHLOROETHYLENE BY ETHYLENE DICHLORIDE CHLORINATION[a,b]

Type of Emission/ Source	Trichloroethylene		Perchloroethylene[b]	
	Control Technique	Emission Factor[c]	Control Technique	Emission Factor[d]
Process Vents				
Distillation column	None	0.003 kg/Mg	NR	NR
Other*	*	0.001 kg/Mg	NR	NR
Storage	*	0.23 kg/Mg	*	0.002 kg/Mg
Handling	None	0.19 kg/Mg	Scrubber[g]	0 kg/Mg[g]
Process Fugitive[e,f]	*	24.1 Mg/yr	None	5.5 Mg/yr
Equipment Openings	None	0.004 kg/Mg	None	0.0008 kg/Mg
Secondary	None	0.0002 kg/Mg	*	0.000007 kg/Mg

[a]Any given trichloroethylene production plant may vary in configuration and level of control from this particular facility. The emissions and control device information in this table is based on 1983 data. The EPA does not have more recent data for this plant. The reader is encouraged to contact plant personnel to confirm the existence of emitting operations and control technology at a particular facility prior to estimating emissions therefrom.

[b]This facility produces TCE; PCE is produced as a by-product only. Emission factors for PCE production by ethylene dichloride chlorination are presented in Table 6.

[c]Emission factors in terms of kg/Mg refer to kilogram of trichloroethylene emitted per megagram of trichloroethylene production capacity. Based on estimated annual emissions from Reference 3 and estimated total production capacity of 54,000 Mg/yr from Reference 5.

[d]Emission factors in terms of kg/Mg refer to kilogram of perchlorethylene emitted per megagram of trichloroethylene production capacity. Based on estimated annual emissions from Reference 4 and estimated total production capacity of 54,000 Mg/yr from Reference 5.

[e]Fugitive emission rate independent of plant capacity.

[f]Based on the average emission factor method for estimating emissions from equipment leaks. Used the equipment count provided by the plant and SOCMI equipment leak emission factors. More accurate emission estimates can be obtained by using other methods such as the leak/no-leak or the three-strata emission factor method. These methods use other data to obtain better emission estimates and are described in Protocols for Generating Unit-Specific Emission Estimates for Equipment Leaks of VOC and VHAP (EPA-450/3-88-010).

[g]At this facility, the PCE by-product is transported in railcars which are loaded through the dome of the car's dip tube. The cars are then vented to a scrubber to contain the vapors. The company reported that the scrubber was 100 percent effective at controlling the PCE emissions.

* = The company considered this to be confidential information.

NR = Not reported.

TABLE 4. TRICHLOROETHYLENE AND PERCHLOROETHYLENE EMISSION FACTORS FOR AN EXISTING PLANT PRODUCING TRICHLOROETHYLENE AND PERCHLOROETHYLENE BY ETHYLENE DICHLORIDE OXYCHLORINATION[a]

Type of Emission/ Source	Trichloroethylene		Perchloroethylene	
	Control Technique	Emission Factor[b]	Control Technique	Emission Factor[c]
Process Vents	Water scrubber[g]	0.012 kg/Mg	Water scrubber[g]	0.001 kg/Mg
Storage[d]	Condenser[h]	0.14 kg/Mg	None or Condenser[i]	0.10 kg/Mg[j]
Handling	Submerged fill pipe[g]	0.030 kg/Mg	Submerged fill pipe[g]	0.0072 kg/Mg
Process Fugitive[e,f]	None	32.1 Mg/yr	None	23.5 Mg/yr
Equipment Openings	Purged (N_2), washed (H_2O), or cleaned at high-temp prior to opening[g]	0.016 kg/Mg	Purged (N_2), washed (H_2O), or cleaned at high-temp prior to opening[g]	0.002 kg/Mg
Relief Device	None	0.0002 kg/Mg	None	0.001 kg/Mg
Secondary	None	0.039 kg/Mg	NR	NR

[a] Any given trichloroethylene production plant may vary in configuration and level of control from this particular facility. The emissions and control device information in this table is based on 1983 data. The EPA does not have more recent data for this plant. The reader is encouraged to contact plant personnel to confirm the existence of emitting operations and control technology at a particular facility prior to estimating emissions therefrom.

[b] Emission factors in terms of kg/Mg refer to kilogram of trichloroethylene emitted per megagram of TCE and PCE production capacity. Based on estimated annual emissions from Reference 3 and estimated total production capacity of 180,000 Mg/yr from Reference 5. In cases where a particular source designation applies to multiple operations, these factors represent combined emissions for all (not each) of these operations within the facility.

[c] Emission factors in terms of kg/Mg refer to kilogram of perchlorethylene emitted per megagram of TCE and PCE production capacity. Based on estimated annual emissions from Reference 4 and estimated total production capacity of 180,000 Mg/yr from Reference 5. In cases where a particular source designation applies to multiple operations, these factors represent combined emissions for all (not each) of these operations within the facility.

[d] All storage tanks are equipped with fixed roofs.

[e] Fugitive emission rate independent of plant capacity.

[f] Based on the average emission factor method for estimating emissions from equipment leaks. Used the equipment count provided by the plant and SOCMI equipment leak emission factors. More accurate emission estimates can be obtained by using other methods such as the leak/no-leak or the three-strata emission factor method. These methods use other data to obtain better emission estimates and are described in Protocols for Generating Unit-Specific Emission Estimates for Equipment Leaks of VOC and VHAP (EPA-450/3-88-010).

[g] The control efficiency of this control technique was not specified.

[h] The plant reported condenser control efficiencies ranging from 75 to 77 percent.

[i] The plant reported condenser control efficiencies of about 80 percent.

[j] Eighty-nine percent of the PCE storage emissions were from uncontrolled storage tanks.

NR = Not reported.

Source Locations

Table 5 presents a published list of major producers of TCE.

PERCHLOROETHYLENE PRODUCTION

Perchloroethylene (PCE) is produced domestically by three processes. Two of the processes involve the chlorination and oxychlorination of ethylene dichloride (EDC) or other chlorinated hydrocarbons having two carbon atoms. Perchloroethylene and TCE are manufactured separately or as coproducts by the chlorination or oxychlorination process with the raw material ratios determining the proportions of PCE and TCE.[1] Perchloroethylene is also manufactured as a coproduct with carbon tetrachloride by the chlorinolysis of hydrocarbons such as propane and propylene.[7]

Perchloroethylene was once manufactured predominantly by the chlorination of acetylene. However, as acetylene production declined, EDC chlorination and hydrocarbon chlorinolysis became the preferred methods of production. No domestic plants currently use the acetylene-based method to produce PCE.[8]

Process Descriptions

Ethylene Dichloride Chlorination Process--

A discussion of the EDC direct chlorination process for producing PCE and TCE is presented in the subsection titled TRICHLOROETHYLENE PRODUCTION. A diagram of the process is shown in Figure 3.

Ethylene Dichloride Oxychlorination Process--

A discussion of the EDC oxychlorination process for producing PCE and TCE is presented in the subsection titled TRICHLOROETHYLENE PRODUCTION. A diagram of the process is shown in Figure 4.

TABLE 5. DOMESTIC PRODUCERS OF TRICHLOROETHYLENE IN 1988[3,6]

Manufacturer	Location	Process
Dow Chemical, USA	Freeport, TX	Chlorination of Ethylene Dichloride
PPG Industries, Inc.	Lake Charles, LA	Oxychlorination of Ethylene Dichloride

NOTE: This listing is subject to change as market conditions change, facility ownership changes, plants are closed down, etc. The reader should verify the existence of particular facilities by consulting current listings and/or the plants themselves. The level of PCE or TCE emissions from any given facility is a function of variables such as capacity, throughput and control measures, and should be determined through direct contacts with plant personnel. These operating plants and locations were current as of January 1988.

Hydrocarbon Chlorinolysis Process--

The majority of PCE produced in the United States is formed by the hydrocarbon chlorinolysis process. This process involves the simultaneous chlorination and pyrolysis of hydrocarbons in which chlorine is reacted with chlorinated hydrocarbon derivatives or with a hydrocarbon such as methane, ethane, propane, or propylene. The major products of the hydrocarbon chlorinolysis process are PCE, carbon tetrachloride, and hydrogen chloride. The process yields a crude product from which marketable PCE is derived following distillation and purification. The reaction can be represented by the following equations:

$$C_3H_8 + Cl_2 \xrightarrow[cat]{500^o} Cl_2C = CCl_2 + CCl_4 + HCl$$

$$C_3H_6 + Cl_2 \xrightarrow[cat]{500^o} Cl_2C = CCl_2 + CCl_4 + HCl$$

Basic operations that may be used in this process are shown in Figure 5. Preheated hydrocarbon feed material (Stream 1) and chlorine (Stream 2) are fed to a chlorinolysis reactor, which is a fluid-bed reactor maintained at about 500^oC.[7] The reaction products, consisting of carbon tetrachloride, PCE, HCl, and chlorinated hydrocarbon by-products (Stream 3), pass through a cyclone for removal of entrained catalyst and then are sent to a condenser. Uncondensed materials (Stream 4), consisting of hydrogen chloride, unreacted chlorine, and some carbon tetrachloride, are removed to the hydrogen chloride purification system. The condensed material (Stream 5) is fed to a hydrogen chloride and chlorine removal column, with the overheads (Stream 6) from this column going to hydrogen chloride purification. The bottoms (Stream 7) from the column are fed to a crude storage tank. Material from crude storage is fed to a distillation column, which recovers carbon tetrachloride as overheads (Stream 8). The bottoms (Stream 10) from the carbon tetrachloride distillation column are fed to a

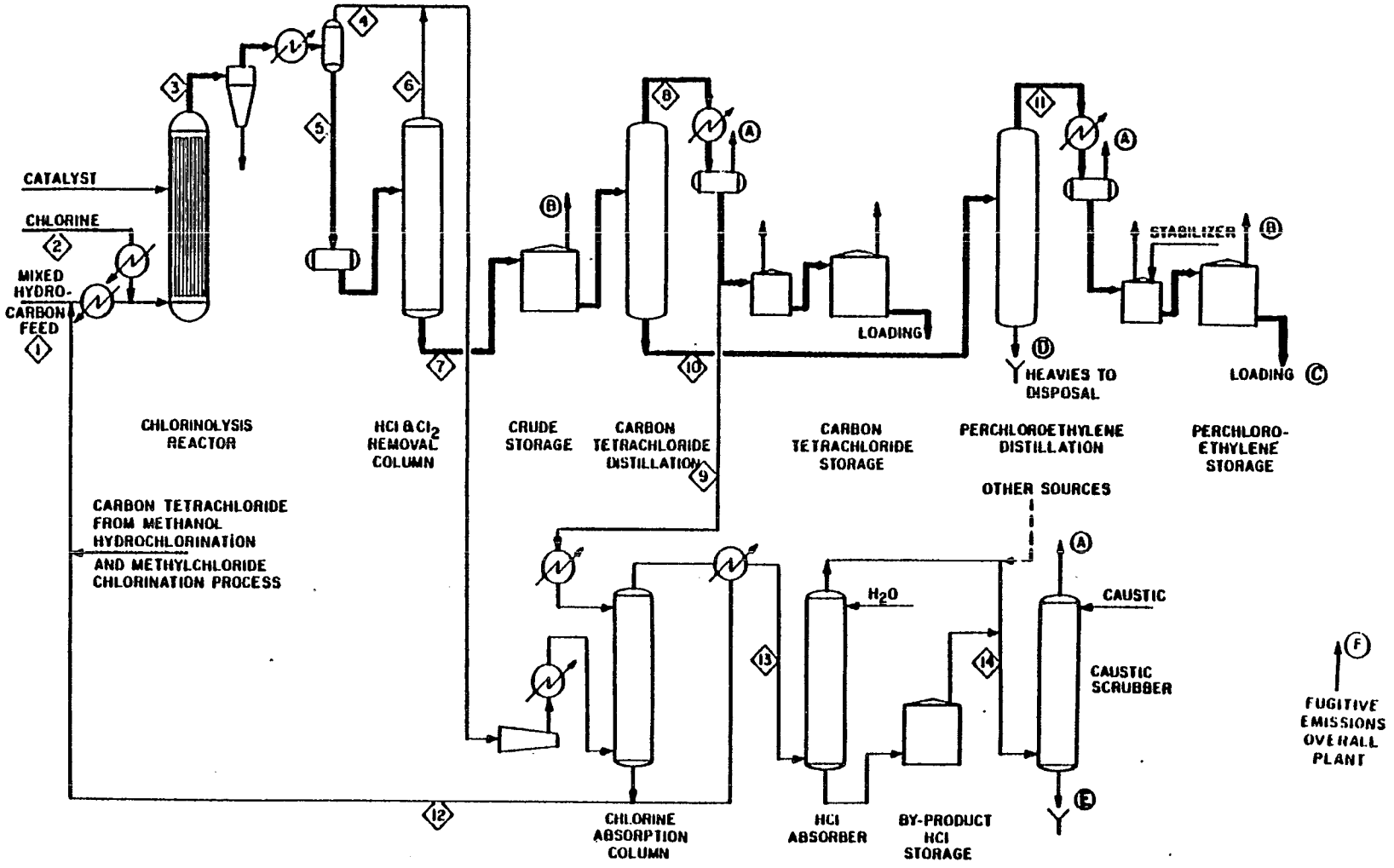

NOTE: The numbers in this figure refer to process streams, as discussed in the text, and the letters designate process vents. The heavy lines represent final product streams through the process.

Figure 5. Basic operations that may be used for the production of perchloroethylene by hydrocarbon chlorinolysis. [7]

PCE distillation column. The overheads (Stream 11) from the PCE distillation column are taken to PCE storage and loading, and the bottoms are incinerated.[7]

The feed streams (Streams 4 and 6) to hydrogen chloride purification are compressed, cooled, and scrubbed in a chlorine absorption column with chilled carbon tetrachloride (Stream 9) to remove chlorine. The bottoms and condensable overheads (Stream 12) from this column are combined and recycled to the chlorinolysis reactor. Uncondensed overheads (Stream 13) from the chlorine absorption column are contacted with water to produce a hydrochloric acid solution. This solution is stored for eventual reprocessing and use in a separate facility. Overheads from the absorber and vented gases from by-product hydrochloric acid storage are combined (Stream 14) and passed through a caustic scrubber for removal of residual hydrogen chloride. Inert gases are vented from the scrubber.[7]

Emissions

The majority of PCE emitted from all three processes originate from fugitive emissions. Storage tanks are the second largest source of PCE emissions. Potential emission sources for the EDC chlorination and oxychlorination processes are shown in Figures 3 and 4, respectively, and are discussed in the TRICHLOROETHYLENE PRODUCTION subsection.

Potential emission sources for the hydrocarbon chlorinolysis process are shown in Figure 5. Process emission sources originate at the carbon tetrachloride and PCE distillation condensers and caustic scrubber (Vents A). Fugitive emission sources (F) include process pumps, valves and compressors. Corrosion problems caused by chlorine and hydrogen chloride can increase fugitive emissions. Storage emission sources (B) are crude and final product storage. Several facilities reported using fixed roof tanks; a couple other facilities, however, considered storage tank information to be confidential. Handling emissions (C) can occur during product loadings into drums, tank trucks, tank cars, barges, or ships for shipment. Secondary emissions of PCE can result from handling and disposal of process

waste liquids. Two sources of secondary emissions from the hydrocarbon chlorinolysis process are the bottoms from the PCE distillation column (D), commonly called hex wastes, and the waste caustic from the caustic scrubber (E).[7]

Perchloroethylene emission factors for the EDC oxychlorination process are shown in Table 4 and discussed in the TRICHLOROETHYLENE PRODUCTION subsection. Perchloroethylene emission factors for PCE production by the EDC chlorination and hydrocarbon chlorinolysis processes are shown in Tables 6 and 7, respectively. For the EDC chlorination process, the emission factors presented are based on two facilities for which emissions information was available. Control information is considered confidential and is not listed for either facility, except for control of handling emissions by submerged fill pipes. Perchloroethylene emissions could be reduced by using condensers on process vents. For the chlorinolysis process, the emission factors are based on five facilities. Emission factors for each individual plant were derived from the estimated annual emission rate and the estimated PCE production capacity for that plant in 1983.[4,5] As such, the factors presented in Tables 6 and 7 reflect the overall level of control at PCE production facilities in 1983. The EPA does not have more recent data on emissions or control devices at these plants.

Individual plants vary in the number of emission points reported and the types of controls used. Emissions from process vents can be controlled by scrubbers; fixed roof tanks by installation of internal floating roofs with primary and/or secondary seals and addition of refrigerated condenser system; handling by use of submerged fill pipe technology; equipment openings by purging/washing/cleaning prior to openings; fugitive sources by employing an I/M program; and secondary sources by steam stripping and incineration. The reader is encouraged to confirm the existence of emitting operations and control technology at a particular facility prior to estimating emissions therefrom.

TABLE 6. EMISSION FACTORS FOR THE RELEASE OF PERCHLOROETHYLENE FROM PERCHLOROETHYLENE PRODUCTION BY ETHYLENE DICHLORIDE CHLORINATION

Type of Emission/Source	Emission Factor[a,b]	
	Range	Average
Process Vents	0.12 - 0.29 kg/Mg	0.21 kg/Mg
Storage	0.23 - 1.0 kg/Mg	0.62 kg/Mg
Handling	0.001 - 0.051 kg/Mg	0.026 kg/Mg
Process Fugitive[c,d]	80 - 138 Mg/yr	110 Mg/yr
Equipment Openings[e]	0.003 kg/Mg	0.003 kg/Mg
Secondary	0.0[f] - 0.001 kg/Mg	0.0005 kg/Mg

[a]Emission factors in terms of kg/Mg refer to kilograms of PCE emitted per megagram of PCE production capacity.

[b]Based on emission factors calculated for two facilities. Emission factors for each facility were based on the estimated annual emission rate from Reference 4 and the estimated PCE production capacity from Reference 5. The emission factors reflect the total emission rate from both uncontrolled and controlled sources at the two facilities in 1983. The number of emission points and the types of controls used at each plant differs. The EPA does not have more recent data on emissions or control devices at these plants. The reader is encouraged to contact plant personnel to confirm the existence of emitting operations and control technology at a particular facility prior to estimating emissions therefrom.

[c]Fugitive emissions rate independent of plant capacity.

[d]Based on the average emission factor method for estimating emissions from equipment leaks. Used the equipment count provided by plants and SOCMI equipment leak emission factors; represents a relatively uncontrolled facility where no significant leak detection and repair programs are in place to limit fugitive emissions. More accurate emission estimates can be obtained by using other methods such as the leak/no-leak or the three-strata emission factor method. These methods use other data described in Protocols for Generating Unit-Specific Emission Estimates for Equipment Leaks of VOC and VHAP (EPA-450/3-88-010).

[e]Uncontrolled; based on data from one plant only.

[f]Value reported by facility.

TABLE 7. EMISSION FACTORS FOR THE RELEASE OF PERCHLOROETHYLENE FROM PERCHLOROETHYLENE PRODUCTION BY HYDROCARBON CHLORINOLYSIS PROCESS

Type of Emission/Source	Emission Factor[a,b]	
	Range	Average
Process Vents	<0.00004 - 0.20 kg/Mg	0.06 kg/Mg
Storage	0.013 - 0.69 kg/Mg	0.4 kg/Mg
Handling	0.03 - 0.89 kg/Mg	0.06 kg/Mg
Process Fugitive[c]	0.41 - 60 Mg/yr[d]	34 Mg/yr[d]
Equipment Openings	0.00006 - 0.054 kg/Mg	0.02 kg/Mg
Secondary	0.0025 - 0.013 kg/Mg	0.008 kg/Mg

[a]Emission factors in terms of kg/Mg refer to kilograms of PCE emitted per megagram of PCE production capacity.

[b]Based on emission factors calculated for five facilities. Emission factors for each facility were based on the estimated annual emission rate from Reference 4 and the estimated PCE production capacity from Reference 5. The emission factors reflect the total emission rate from both uncontrolled and controlled sources at the five facilities in 1983. The number of emission points and the types of controls used at each plant differs. The EPA does not have more recent data on emissions or control devices at these plants. The reader is encouraged to contact plant personnel to confirm the existence of emitting operations and control technology at a particular facility prior to estimating emissions therefrom.

[c]Fugitive emissions rate independent of plant capacity.

[d]At one facility, fugitive emissions were estimated to be 0.41 Mg/yr based on emissions testing. At four other facilities, fugitive emission estimates ranged from 13.6 to 60 Mg/yr PCE. These estimates were based on the average emission factor method for estimating emissions from equipment leaks. The equipment counts provided by plants and SOCMI equipment leak emission factors were used. More accurate emission estimates can be obtained by using other methods such as the leak/no-leak or the three-strata emission factor method. These methods use other data to obtain better emission estimates and are described in Protocols for Generating Unit-Specific Emission Estimates for Equipment Leaks of VOC and VHAP (EPA-450/3-88-010).

Source Locations

Table 8 presents a list of perchloroethylene production facilities, their locations, and production process.

TABLE 8. DOMESTIC PRODUCERS OF PERCHLOROETHYLENE IN 1988[4,5]

Manufacturer	Location	Process
Dow Chemical, USA	Pittsburg, CA Plaquemine, LA	Chlorinolysis Chlorinolysis
Occidental Petroleum Corporation, Occidental Chemical Corporation, subsidiary; electro-chemicals, detergent, and specialty products	Deer Park, TX	Chlorination of Ethylene Dichloride
PPG Industries, Inc. Chemicals Group	Lake Charles, LA	Oxychlorination of Ethylene Dichloride
Vulcan Materials Co. Vulcan Chemicals Div.	Geismar, LA Wichita, KS	Chlorinolysis Chlorinolysis

NOTE: This listing is subject to change as market conditions change, facility ownership changes, plants are closed down, etc. The reader should verify the existence of particular facilities by consulting current listings and/or the plants themselves. The level of PCE or TCE emissions from any given facility is a function of variables such as capacity, throughput and control measures, and should be determined through direct contacts with plant personnel. These operating plants and locations were current as of January 1988.

REFERENCES FOR SECTION 4

1. Standifer, R. L., and J. A. Key. Report 4: 1,1,1-Trichloroethane and Perchloroethylene, Trichloroethylene, and Vinylidine Chloride. (In) Organic Chemical Manufacturing Volume 8: Selected Processes. EPA-450/3-80-28c. U.S. Environmental Protection Agency, Research Triangle Park, North Carolina. 1980. pp. III-8 to III-14.

2. Mannsville Chemical Products Corp. Chemical Products Synopsis - Trichloroethylene. Asbury Park, New Jersey. 1987.

3. U.S. Environmental Protection Agency. Survey of Trichloroethylene Emission Sources. EPA-450/3-85-021. Office of Air Quality Planning and Standards, Research Triangle Park, North Carolina. 1985.

4. U.S. Environmental Protection Agency. Survey of Perchloroethylene Emission Sources. EPA-450/3-85-017. Office of Air Quality Planning and Standards, Research Triangle Park, North Carolina. 1985.

5. SRI International. 1983 Directory of Chemical Producers. Menlo Park, California. 1983.

6. SRI International. 1988 Directory of Chemical Producers. Menlo Park, California. 1988.

7. Hobbs, F. D., and C. W. Stuewe. Report 2: Carbon Tetrachloride and Perchloroethylene by the Hydrocarbon Chlorinolysis Process. (In) Organic Chemical Manufacturing, Volume 8: Selected Processes. EPA-450/3-80-28c. U.S. Environmental Protection Agency, Research Triangle Park, North Carolina. 1980. pp. III-1 to III-4.

8. Mannsville Chemical Products. Chemical Products Synopsis - Perchloroethylene. Asbury Park, New Jersey. 1987.

SECTION 5
EMISSIONS FROM INDUSTRIES PRODUCING TRICHLOROETHYLENE OR PERCHLOROETHYLENE AS A BY-PRODUCT

This section discusses TCE and PCE emissions from two processes where TCE and/or PCE are produced as a by-product. Trichloroethylene is produced as a by-product and may be emitted from vinylidene chloride production. Trichloroethylene and PCE are produced as by-products and may be emitted during the production of vinyl chloride monomer by the balanced process. Emission sources are identified and emission factors are presented as available. The reader is advised to contact the specific source in question to verify the nature of the process, production volume, and control techniques used before applying any of the emission factors presented in this report.

VINYLIDENE CHLORIDE PRODUCTION

Trichloroethylene is formed as a by-product in the manufacture of vinylidene chloride (VDC). Vinylidene chloride is produced domestically by the dehydrochlorination of 1,1,2-trichloroethane with sodium hydroxide.[1] Two plants in the U.S. produce VDC; each of these produces a number of other chlorinated hydrocarbons by a variety of processes.[1,2]

Process Description

Vinylidene chloride is produced by the action of caustic on 1,1,2-trichloroethane. The raw material 1,1,2-trichloroethane is produced as a coproduct in the chlorination and oxychlorination of ethane, ethylene, and ethylene dichloride (1,2,-dichloroethane) to produce chlorinated C_2

species.[3] The reaction for the dehydrochlorination of 1,1,2-trichloroethane to produce VDC is as follows:

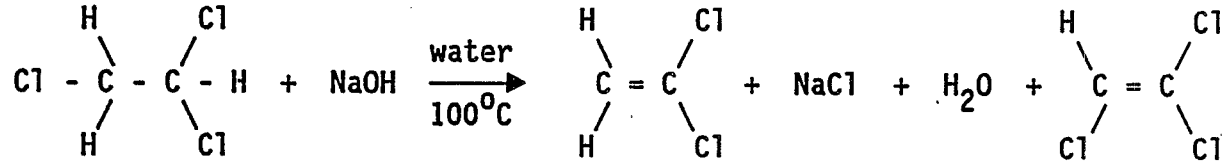

1,1,2-trichloroethane — sodium hydroxide — VDC — TCE

The reaction is carried out with 2 to 10 percent excess caustic and product yields range from 85 to 90 percent.[1]

Basic operations that may be used in the production of VDC from 1,1,2-trichloroethane are shown in Figure 6. Concentrated sodium hydroxide (Stream 1) is diluted with water (Stream 2) to about 5 to 10 weight percent and is mixed with the 1,1,2-trichloroethane feed (Stream 3) and fed (Stream 4) to the dehydrochlorination reactor. The reaction is carried out in the liquid phase at about 100°C without catalysts. Because the aqueous and organic reactants are not miscible, the reaction is carried out in a liquid dispersion. The dehydrochlorination reactor is continuously purged with nitrogen (Stream 5) to prevent the accumulation of monochloroacetylene impurity in the product VDC. The nitrogen is discharged from Vent A.[1]

The VDC-containing product from the dehydrochlorination reactor (Stream 6) is separated in a decanter into an aqueous phase (Stream 7) and an organic phase (Stream 8). The aqueous phase, comprising a sodium hydroxide/sodium chloride solution, is divided. One fraction (Stream 9) is recycled (Stream 4) to the hydrochlorination reactor, and the other fraction (Stream 10) is steam stripped to remove organics and is discharged to a wastewater treatment system (Discharge F).[1]

The organics from the aqueous phase (Stream 11) are combined with the organic phase from the decanter (Stream 8). The combined organics (Stream 12) are fed to a drying column, where residual water is removed as a

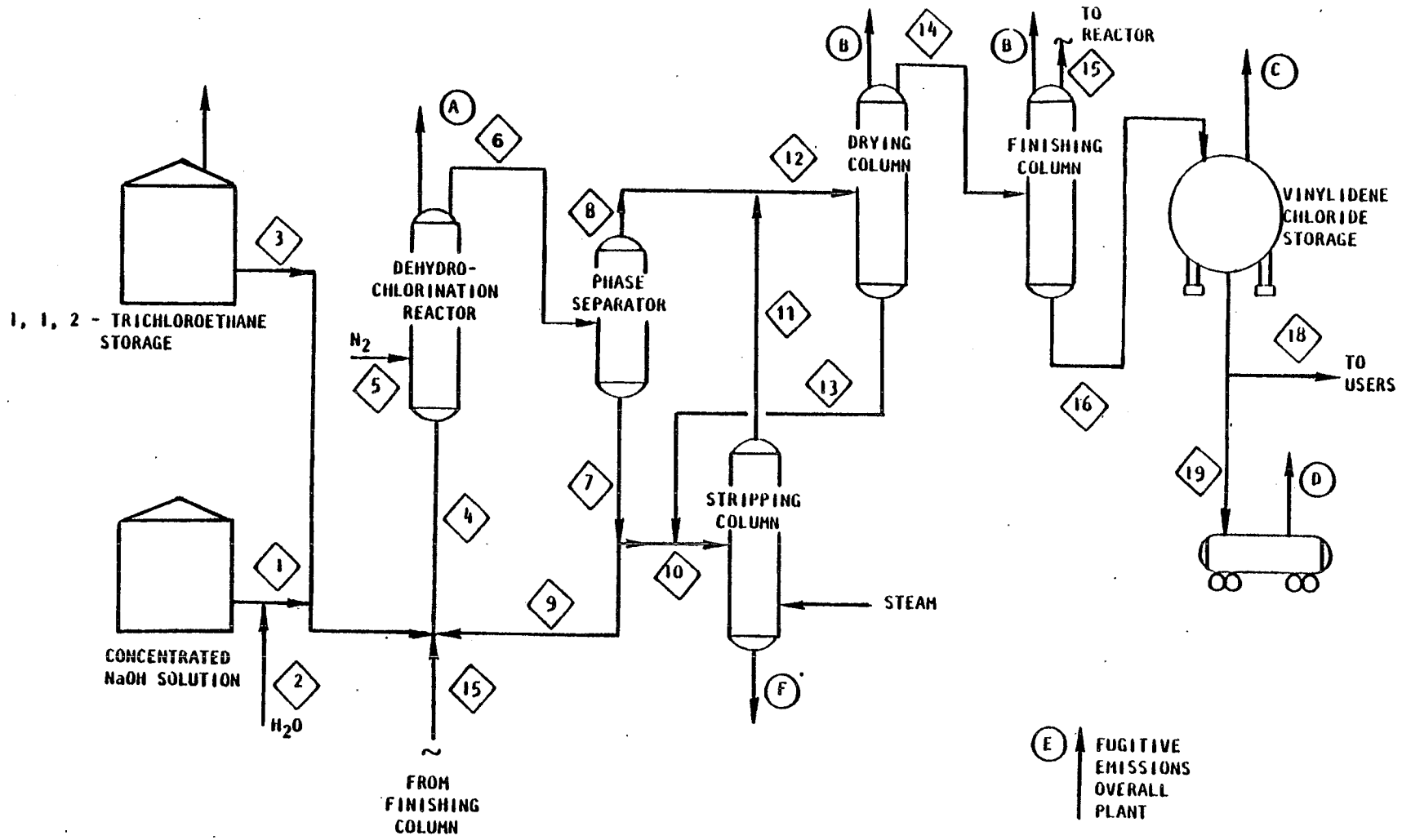

NOTE: The numbers in this figure refer to process streams, as discussed in the text, and the letters designate process vents.

Figure 6. Basic operations that may be used for vinylidene chloride production from 1,1,2-trichloroethane.[3]

bottoms stream (Stream 13). The water removed from the drying column is fed to the stream stripper with the aqueous stream from the product decanter (Stream 10).[1]

The organic stream from the drying column (Stream 14) is fed to a distillation column, which removes unreacted 1,1,2-trichloroethane as overheads (Stream 15). The unreacted trichloroethane is recycled to the dehydrochlorination reactor. Purified VDC product, removed as bottoms from the finishing column (Stream 16), is used onsite or stored in pressurized tanks before being shipped to users.[1]

Emissions

Trichloroethylene can be formed as a by-product during VDC production. Potential sources of process emissions (Figure 6) are the dehydrochlorination reactor purge vent (A) and the distillation column vents (B), which release primarily noncondensible gases. Storage emissions (Source C) result from the storage of VDC product and intermediates containing TCE. Handling emissions (Source D) result from the loading of VDC into tank trucks and railroad tank cars. Fugitive emissions (E) result from leaks in valves, pumps, compressors, and pressure relief valves. When process pressures are higher than the cooling water pressure, VOC can leak into the cooling water and escape as fugitive emissions from the cooling tower.[1] Secondary TCE emissions can occur from desorption of VOCs during wastewater treatment.[1]

Emissions of TCE in 1983 have been estimated for one VDC manufacturing facility.[4] The major source of TCE emissions at the facility was equipment leaks (fugitive emissions). Using the average emission factor method for estimating emissions from equipment leaks, uncontrolled fugitive emissions were estimated to be about 2.3 Mg/yr TCE based on an equipment count provided by the plant and SOCMI equipment leak emission factors.[4] More accurate emission estimates can be obtained by using other methods such as the leak/no-leak or the three-strata emission factor method. These methods use other data to obtain better emission estimates and are described in

Protocols for Generating Unit-Specific Emission Estimates for Equipment Leaks of VOC and VHAP (EPA-450/3-88-010).

The plant reported that a monitoring system was already in place that detected 75 to 80 percent of all equipment leaks.[4] Insufficient information was provided, however, to determine the effectiveness of the monitoring system in controlling fugitive emissions. It was estimated that a formal leak detection and repair program would reduce fugitive emissions by about 50 percent.[4]

Trichloroethylene emissions from one process vent and one pressurized storage tank at the facility were estimated to be 1×10^{-7} Mg/yr and 4×10^{-6} Mg/yr, respectively.[4] The facility considers further information regarding the process vent and storage tank to be confidential.[4] Production capacity data for the facility are also considered to be confidential. Therefore, insufficient data are available to estimate TCE emission factors for the process and storage vents at this facility. No TCE emissions from other sources were reported. The EPA does not have more recent data on emissions or control devices at this facility.

Vinylidene chloride production plants may vary in configuration and level of control. The reader is encouraged to contact plant personnel to confirm the existence of emitting operations and control technology at a particular facility prior to estimating emissions therefrom.

Source Locations

Major vinylidene chloride producers and production locations are listed in Table 9.[2]

ETHYLENE DICHLORIDE/VINYL CHLORIDE MONOMER PRODUCTION

Trichloroethylene and PCE may be formed as by-products during the production of vinyl chloride monomer (VCM) by the balanced process. The balanced process involves two steps. In the first step, ethylene dichloride

TABLE 9. DOMESTIC PRODUCERS OF VINYLIDENE CHLORIDE IN 1988[2]

Manufacturer	Location
Dow Chemical, USA	Freeport, TX
PPG Industries, Inc. Chemicals Group	Lake Charles, LA

NOTE: This listing is subject to change as market conditions change, facility ownership changes, plants are closed, etc. The reader should verify the existence of particular facilities by consulting current listings and/or the plants themselves. The level of TCE emissions from any given facility is a function of variables such as capacity, throughput and control measures, and should be determined through direct contacts with plant personnel. These operating plants and locations were current as of January 1988.

(EDC) is produced from ethylene and chlorine by direct chlorination, and from ethylene and hydrogen chloride (HCl) by oxychlorination. In the second step, EDC is dehydrochlorinated to yield VCM and by-product HCl. The by-product HCl from VCM production via the direct chlorination/dehydrochlorination process is used in the oxychlorination/dehydrochlorination process.

Process Descriptions

Ethylene Dichloride Production--

The balanced process consists of an oxychlorination operation, a direct chlorination operation, and product finishing and waste treatment operations. The raw materials for the direct chlorination process are chlorine and ethylene. Oxychlorination involves the treatment of ethylene with oxygen and HCl. Oxygen for oxychlorination generally is added by feeding air to the reactor, although some plants use purified oxygen as feed material.[5] Trichloroethylene and PCE are formed as by-products of oxychlorination as shown in the following equation:

$$C_2H_4 + HCl + O_2 \xrightarrow[CuCl_2]{} \underset{EDC}{ClCH_2CH_2Cl} + \underset{TCE}{ClCHCCl_2} + \underset{PCE}{Cl_2CCCl_2}$$

Basic operations that may be used in a balanced process using air for the oxychlorination step are shown in Figure 7. Actual flow diagrams for production facilities will vary. The process begins with ethylene (Stream 1) being fed by pipeline to both the oxychlorination reactor and the direct chlorination reactor. In the oxychlorination reactor the ethylene, anhydrous hydrogen chloride (Stream 2), and air (Stream 3) are mixed at molar proportions of about 2:4:1, respectively, producing 2 moles of EDC and 2 moles of water. The reaction is carried out in the vapor phase at 200 to 315°C in either a fixed-bed or fluid-bed reactor. A mixture of copper chloride and other chlorides is used as a catalyst.[5]

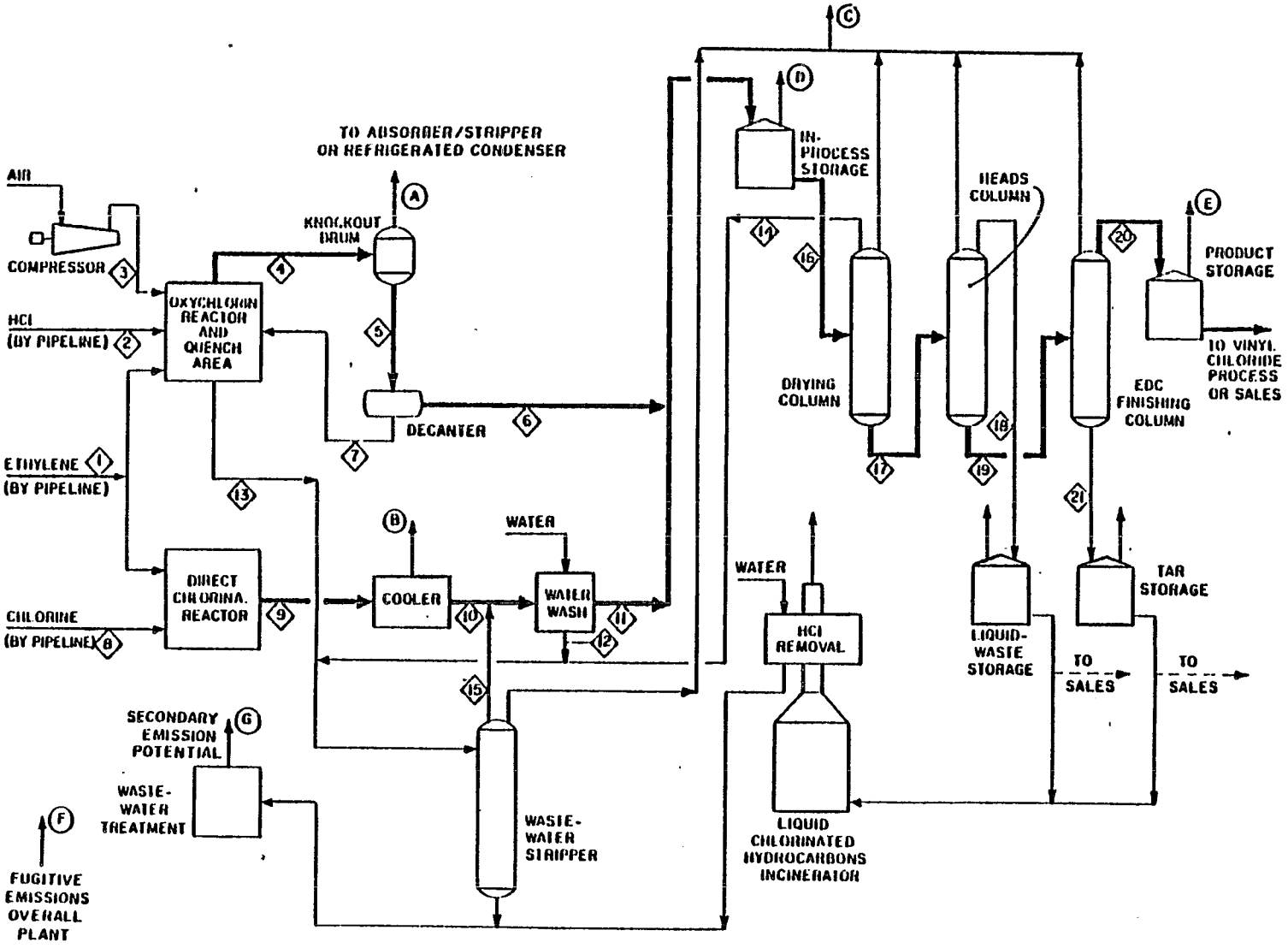

NOTE: The numbers in this figure refer to process streams, as discussed in the text, and the letters designate process vents. The heavy lines represent final product streams through the process.

Figure 7. Basic operations that may be used for ethylene dichloride production by the balanced process, with air-based oxychlorination. [5]

The products of reaction from the oxychlorination reactor are quenched with water, cooled (Stream 4), and sent to a knockout drum, where EDC and water (Stream 5) are condensed. The condensed stream enters a decanter, where crude EDC is separated from the aqueous phase. The crude EDC (Stream 6) is transferred to in-process storage, and the aqueous phase (Stream 7) is recycled to the quench step. Nitrogen and other inert gases are released to the atmosphere (Vent A). The concentration of organics in the vent stream is reduced by absorber and stripper columns or by a refrigerated condenser (not shown in Figure 7).[5,6]

In the direct-chlorination step of the balanced process, equimolar amounts of ethylene (Stream 1) and chlorine (Stream 8) are reacted at a temperature of 38 to 49°C and at pressures of 69 to 138 kPa. Most commercial plants carry out the reaction in the liquid phase in the presence of a ferric chloride catalyst.[5] Trichloroethylene and PCE are formed as by-products in the following equation:

$$C_2H_4 + Cl_2 \xrightarrow[FeCl_3]{38\text{-}49^{\circ}C} \underset{\text{EDC}}{ClCH_2CH_2Cl} + \underset{\text{TCE}}{ClCHCCl_2} + \underset{\text{PCE}}{Cl_2CCCl_2} + HCl$$

Products (Steam 9) from the direct chlorination reactor are cooled and washed with water (Stream 10) to remove dissolved hydrogen chloride before being transferred (Steam 11) to the crude EDC storage facility. Any inert gas fed with the ethylene or chlorine is released to the atmosphere from the cooler (Vent B). The waste wash water (Stream 12) is neutralized and sent to the wastewater steam stripper along with neutralized wastewater (Stream 13) from the oxychlorination quench area and the wastewater (Stream 14) from the drying column. The overheads (Stream 15) from the wastewater steam stripper, which consist of recovered EDC, other chlorinated hydrocarbons, and water, are returned to the process by adding them to the crude EDC (Stream 10) going to the water wash.[5]

Crude EDC (Stream 16) from in-process storage goes to the drying column, where water (Stream 14) is distilled overhead and sent to the wastewater steam stripper. The dry crude EDC (Stream 17) goes to the heads column, which removes light ends (Stream 18) for storage and disposal or sale. Bottoms (Stream 19) from the heads column enter the EDC finishing column, where EDC (Stream 20) goes overhead to product storage. The tars from the EDC finishing column (Stream 21) are taken to tar storage for disposal or sale.[5]

Several domestic EDC producers use oxygen as the oxidant in the oxychlorination reactor. Figure 8 shows basic operations that may be used in an oxygen-based oxychlorination process as presented in the literature.[5] For a balanced process plant, the direct chlorination and purification steps are the same as those shown in Figure 7, and therefore, are not shown again in Figure 8. Ethylene (Stream 1) is fed in large excess of the amount used in the air oxychlorination process, that is, 2 to 3 times the amount needed to fully consume the HCl feed (Stream 2). Oxygen (Stream 3) is also fed to the reactor, which may be either a fixed bed or a fluid bed. After passing through the condensation step in the quench area, the reaction products (Stream 4) go to a knockout drum, where the condensed crude EDC and water (Stream 5) produced by the oxychlorination reaction are separated from the unreacted ethylene and the inert gases (Stream 6). From the knockout drums the crude EDC and water (Stream 5) go to a decanter, where wastewater (Stream 7) is separated from the crude EDC (Stream 8), which goes to in-process storage as in the air-based process. The wastewater (Stream 7) is sent to the steam stripper in the direct chlorination step for recovery of dissolved organics.[5]

The vent gases (Stream 6) from the knockout drum go to a caustic scrubber for removal of HCl and carbon dioxide. The purified vent gases (Stream 9) are then compressed and recycled (Stream 10) to the oxychlorination reactor as part of the ethylene feed. A small amount of the vent gas (Vent A) from the knockout drum is purged to prevent buildup of the inert gases entering with the feed streams or formed during the reaction.[5]

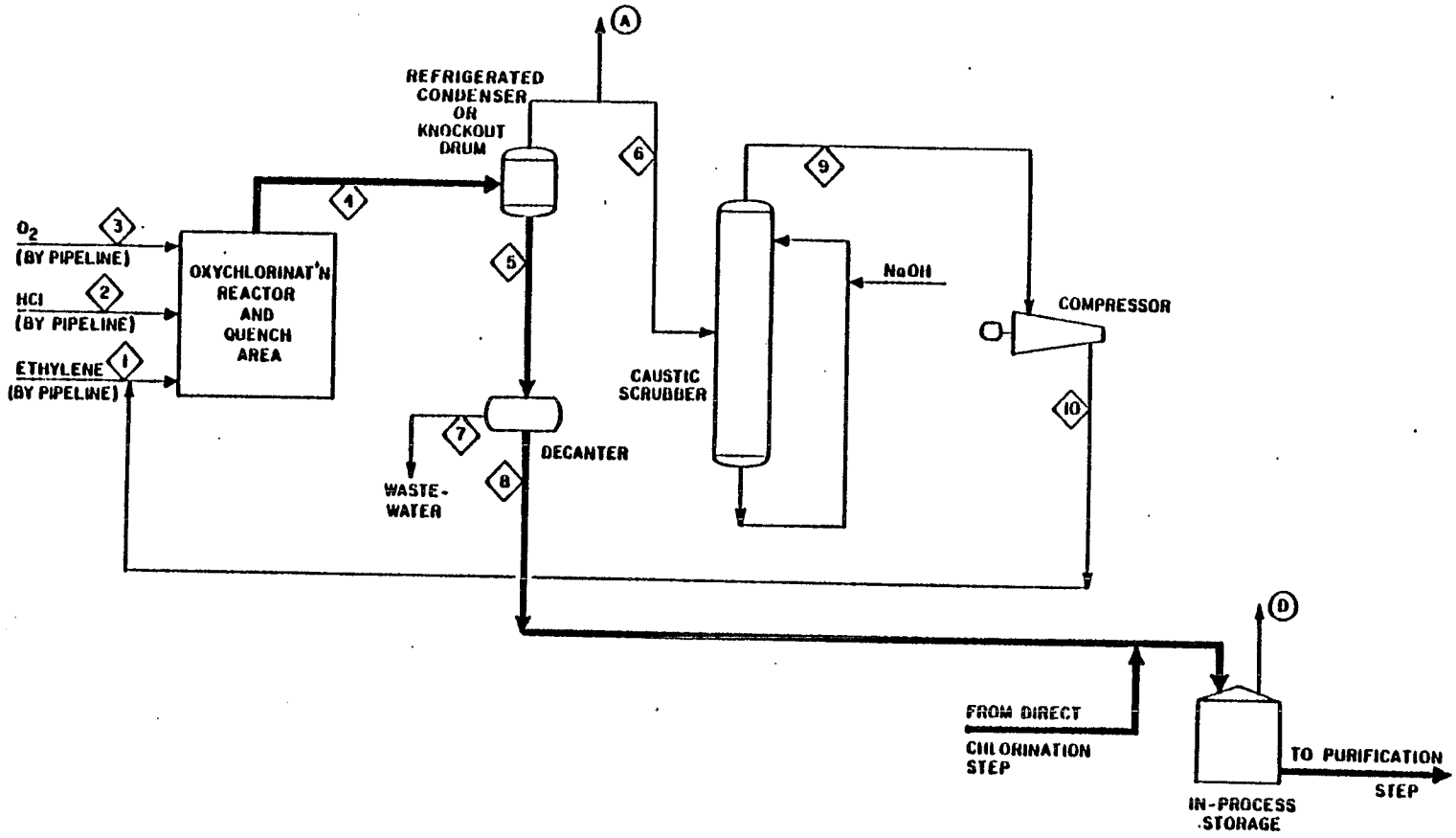

NOTE: The numbers in this figure refer to process streams, as discussed in the text, and the letters designate process vents. The heavy lines represent final product streams through the process.

Figure 8. Basic operations that may be used for ethylene dichloride production by the oxygen process (oxychlorination step). [5]

Ethylene Dichloride Dehydrochlorination--

A typical flow diagram for EDC dehydrochlorination is shown in Figure 9. Ethylene dichloride (Stream 1) is introduced into the pyrolysis furnace where it is cracked in the vapor phase at temperatures of 450 to 620°C and pressures of 450 to 930 kPa.[6] About 50 to 60 percent conversion of EDC to VCM is achieved in the reaction.[7] The reaction is presented in the following equation:

$$\underset{\text{EDC}}{ClCH_2CH_2Cl} \xrightarrow[450\text{-}930\ kPa]{450\text{-}620^{\circ}C} \underset{\text{VCM}}{CH_2CHCl} + HCl$$

No PCE or TCE are formed in this step.

The product gas stream from the furnace (Stream 2), containing VCM, EDC, and HCl is quenched with liquid EDC, and fed to a condenser. Hydrogen chloride is removed from the condenser in the gas phase, and is recovered for use onsite, generally in EDC production. The liquid stream from the condenser (Stream 4) is fed to a distillation column, where it is separated into VCM product, unreacted EDC, and heavy ends. The unreacted EDC (Stream 5) is recycled either to the quench column or to the finishing section of the EDC production process (generally onsite).[6] The vinyl chloride product is stored in pressurized vessels for eventual shipment to polyvinyl chloride (PVC) plants or other facilities using vinyl chloride. In instances where the PVC plant is very close to the vinyl chloride producers, vinyl chloride can be delivered by pipeline.[7] Heavy ends are incinerated.[6]

Emissions

Potential sources of TCE and PCE process emissions are the oxychlorination vent (Vent A, Figures 7 and 8) and the direct chlorination vent (Vent B, Figure 7). Other potential sources of process emissions are gases released from column vents (Vent C, Figure 7), which include vents

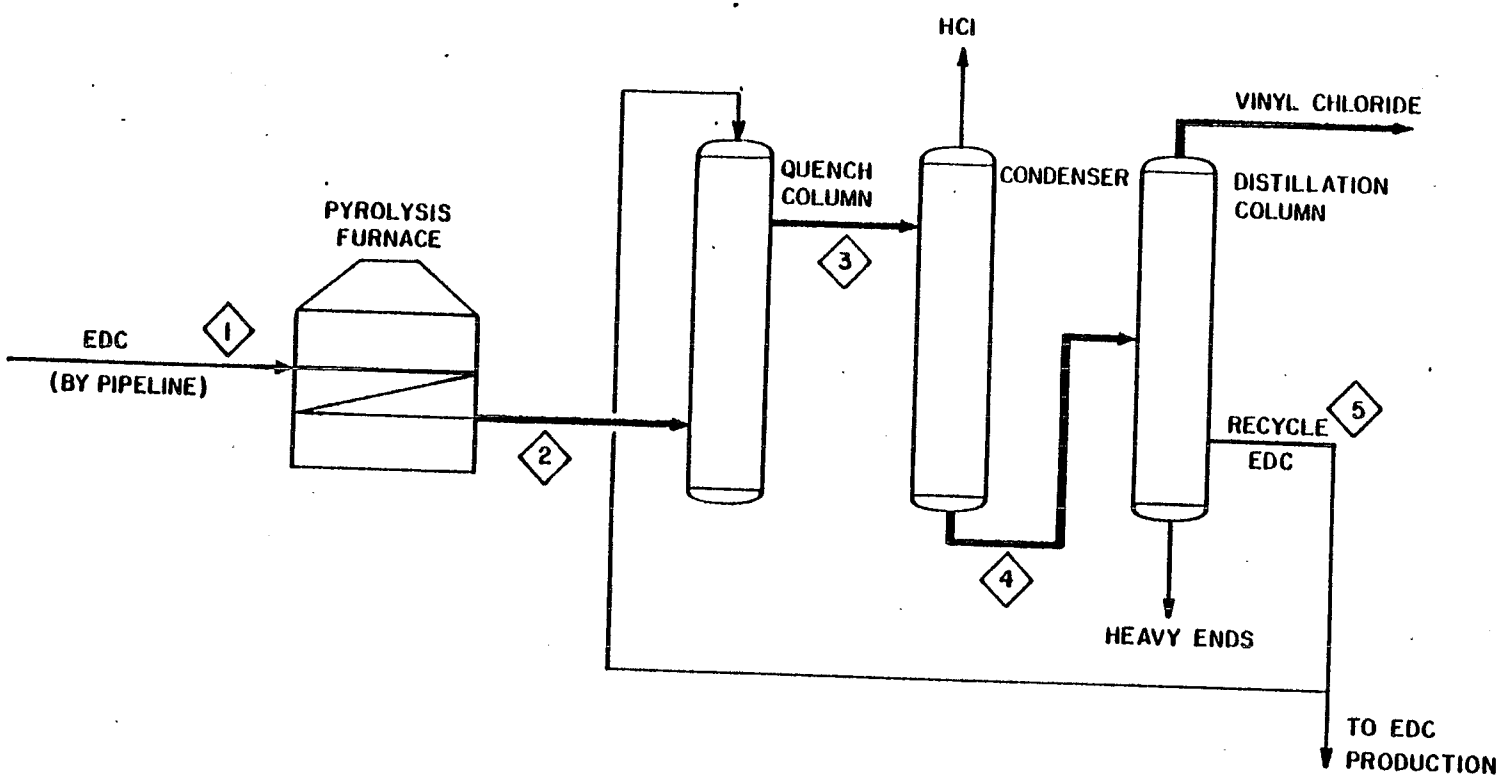

NOTE: The numbers in this figure refer to process streams, as discussed in the text, and the letters designate process vents. The heavy lines represent final product streams through the process.

Figure 9. Basic operations that may be used for vinyl chloride production by ethylene dichloride dehydrochlorination. [6]

from the wastewater steam stripper, the drying column, the heads column, and the EDC finishing column.[5] Many plants incinerate vent gases from the oxychlorination reactor, direct chlorination reactor, and column vents to reduce atmospheric emissions of volatile organics.[4-6,8,9]

Storage emission sources include in-process, liquid-waste stream, and product storage (Sources D and E, Figures 7 and 8; source not shown in Figure 9). Refrigerated condensation, compression, and/or incineration may be used to control storage emissions.[4,5,9] In addition, vinyl chloride product is generally stored in pressurized tanks.[7] Handling emissions may occur during waste by-product loading operations.[4,9] Fugitive emissions (Source F in Figure 7) result from leaks in process valves, pumps, compressors, and pressure relief valves. Secondary emissions can result from the handling and disposal of process waste-liquid streams (Source G in Figure 7).[5]

Table 10 presents TCE and PCE emission factors for three existing EDC/VCM plants. The table lists various emission sources, the control techniques used to reduce emissions from each source, and the corresponding emission factor. The emission factors were derived from estimates of the annual emission rate and annual VCM production capacity for each plant in 1983.[4,9-11] The EPA does not have more recent data on emissions or control devices at these plants.

Insufficient information was available to calculate TCE or PCE emission factors for fugitive emissions at the three plants. Fugitive emissions of TCE and PCE may be minor at EDC/VCM plants, however, because of control measures which are taken to prevent emissions of vinyl chloride.[7]

It is uncertain whether the emission factors for the three plants presented in Table 10 are typical for the EDC/VCM industry. These plants may vary in configuration and level of control. The reader is encouraged to contact plant personnel to confirm the existence of emitting operations and control technology at a particular facility prior to estimating emissions therefrom.

TABLE 10. TRICHLOROETHYLENE AND PERCHLOROETHYLENE EMISSION FACTORS FOR THREE PLANTS PRODUCING ETHYLENE DICHLORIDE/VINYL CHLORIDE MONOMER[a]

Source	Plant	Trichloroethylene		Perchloroethylene	
		Control Technique	Emission Factor[b] (kg/Mg)	Control Technique	Emission Factor[c] (kg/Mg)
Process vents	A	Incineration[d]	8×10^{-7}	Incineration[d]	5×10^{-5}
	B	NR	NR	*	5.58×10^{-2}
	C	NR	NR	NR	NR
Storage	A[e]	None or Compression/Incineration[f]	3×10^{-4}[g]	None or Compression/Incineration[f]	6.2×10^{-4}[g]
	B	NR	NR	*	2×10^{-6}
	C[h]	Incineration[d]	4×10^{-8}	Pressure vessel/Incineration[i]	3×10^{-6}[j]
Handling	A	None	1×10^{-5}[k]	None	1×10^{-4}[k]
	B	NR	NR	NR	NR
	C	NR	NR	NR	NR
Secondary	A	None	5×10^{-5}	NR	NR
	B	NR	NR	NR	NR
	C	NR	NR	NR	NR

[a]Any given EDC/VCM plant may vary in configuration and level of control from these plants. The emissions and control device information in this table is based on 1983 data. The EPA does not have more recent data for these plants. The reader is encouraged to contact plant personnel to confirm the existence of emitting operations and control technology at a particular facility prior to estimating emissions therefrom.

[b]Emission factors refer to kilogram of trichloroethylene emitted per megagram of vinyl chloride monomer produced. For plants A and B, emission factors are based on estimated annual emission rate from Reference 4 and estimated annual production capacity from Reference 10. For plant C, which has an acetylene-based VCM production unit and an ethylene-based VCM production unit, emission factors are based on estimated annual emission rate from Reference 4 and estimated annual production capacity for the ethylene-based unit from Reference 11.

[c]Emission factors refer to kilogram of perchloroethylene emitted per megagram of vinyl chloride monomer produced. For plants A and B, emission factors are based on estimated annual emission rate from Reference 9 and estimated annual production capacity from Reference 10. For plant C, which has an acetylene-based VCM production unit and an ethylene-based VCM production unit, emission factors are based on estimated annual emission rate from Reference 9 and estimated annual production capacity for the ethylene-based unit from Reference 11.

[d]The plant reported an incinerator control efficiency of greater than 98 percent.

[e]All storage tanks at this plant were equipped with fixed roofs.

[f]The plant reported a compression/incineration system control efficiency of greater than 98 percent.

[g]Ninety-nine percent of the TCE storage emissions and 96 percent of the PCE storage emissions were from one uncontrolled storage tank.

[h]This plant reported emissions for EDC production process only.

[i]The plant reported an incinerator control efficiency of 99.99 percent based on sampling data.

[j]Includes by-product storage emissions only.

[k]Based on reported emissions from transfer of heavy ends from EDC distillation to tank trucks.

*The company considered all information concerning this emission source to be confidential.

NR = Not reported.

Source Locations

A list of vinyl chloride production facilities and locations is presented in Table 11.

TABLE 11. DOMESTIC PRODUCERS OF VINYL CHLORIDE MONOMER IN 1988[2]

Manufacturer	Location
Borden Chemicals and Plastics	Geismar, LA
Dow Chemical, USA	Oyster Creek, TX Plaquemine, LA
Formosa Plastics Corporation, USA	Baton Rouge, LA Point Comfort, TX
Georgia Gulf Corporation	Plaquemine, LA
The BF Goodrich Company	
BF Goodrich Chemical Group	Calvert City, KY La Porte, TX
Occidental Petroleum Corporation	
Occidental Chemical Corporation, Subsidiary	
PVC Resins and Fabricated Products	Deer Park, TX
PPG Industries, Inc.	
Chemicals Group	Lake Charles, LA
Vista Chemical Company	Lake Charles, LA

NOTE: This listing is subject to change as market conditions change, facility ownership changes, plants are closed, etc. The reader should verify the existence of particular facilities by consulting current listings and/or the plants themselves. The level of TCE and/or PCE emissions from any given facility is a function of variables such as capacity, throughput and control measures, and should be determined through direct contacts with plant personnel. These operating plants and locations were current as of January 1988.

REFERENCES FOR SECTION 5

1. Standifer, R. L., and J. A. Key. Report 4: 1,1,1-Trichloroethane, Perchloroethylene, Trichloroethylene, and Vinylidene Chloride. (In) Organic Chemical Manufacturing, Volume 8: Selected Processes. EPA-450/3-80-028c. U.S. Environmental Protection Agency, Research Triangle Park, North Carolina. 1980.

2. SRI International. 1988 Director of Chemical Producers. Menlo Park, California. 1988.

3. U.S. Environmental Protection Agency. Locating and Estimating Air Emissions from Sources of Vinylidene Chloride. EPA-450/4-84-007k. Office of Air Quality Planning and Standards, Research Triangle Park, North Carolina. 1985.

4. U.S. Environmental Protection Agency. Survey of Trichloroethylene Emission Sources. EPA-450/3-85-021. Office of Air Quality Planning and Standards, Research Triangle Park, North Carolina. 1985.

5. Hobbs, F. D., and J. A. Key. Report 1: Ethylene Dichloride. (In) Organic Chemical Manufacturing, Volume 8: Selected Processes. EPA-450/3-80-28c. U.S. Environmental Protection Agency, Research Triangle Park, North Carolina. 1980.

6. U.S. Environmental Protection Agency. Locating and Estimating Air Emissions from Sources of Ethylene Dichloride. EPA-450/4-84-007d. Office of Air Quality Planning and Standards, Research Triangle Park, North Carolina. 1984.

7. TRW, Inc. Vinyl Chloride - A Review of National Emission Standards. EPA-450/3-82-003. U.S. Environmental Protection Agency, Research Triangle Park, North Carolina. 1982.

8. U.S. Environmental Protection Agency. Locating and Estimating Air Emissions from Sources of Carbon Tetrachloride. EPA-450/4-84-007b. Office of Air Quality Planning and Standards, Research Triangle Park, North Carolina. 1984.

9. U.S. Environmental Protection Agency. Survey of Perchloroethylene Emission Sources. EPA-450/3-85-017. Office of Air Quality Planning and Standards, Research Triangle Park, North Carolina. 1985.

10. SRI International. 1983 Directory of Chemical Producers. Menlo Park, California. 1983.

11. Mannsville Chemical Products Corp. Chemical Products Synopsis - Vinyl Chloride Monomer. Asbury Park, New Jersey. 1984.

SECTION 6
EMISSIONS FROM INDUSTRIES USING TRICHLOROETHYLENE OR PERCHLOROETHYLENE AS CHEMICAL FEEDSTOCK

Emissions from industrial processes using TCE and/or PCE as a raw material are described in this section. These processes include chlorofluorocarbon production and polyvinyl chloride production.

CHLOROFLUOROCARBON PRODUCTION

Perchloroethylene is used as a chemical intermediate in the synthesis of CFC-113 (trichlorotrifluoroethane), CFC-114 (dichlorotetrafluoroethane), CFC-115 (chloropentafluoroethane), and CFC-116 (hexafluoroethane). CFC-113 is used mainly as a solvent, but also as a refrigerant. The other CFC compounds are used chiefly as refrigerants.[1,2] The use of CFCs as aerosol propellants was prohibited in 1979 because of their potential to contribute to stratospheric ozone depletion.

CFC-113 and CFC-114 are co-produced as part of an integrated process within the same facility. The only commercially important domestic process used to produce these two compounds involves the liquid-phase catalytic reaction of anhydrous hydrogen fluoride (HF) with PCE.[3] A portion of CFC-114 produced by this method can be isolated for consumption in a separate reaction with anhydrous hydrogen fluoride to yield CFC-115 and CFC-116.[4] These reactions are illustrated by the following chemical equations:

$$Cl_2CCCl_2 + HF + Cl_2 \xrightarrow[SbCl_5]{45\text{-}200^{\circ}C,\ 100\text{-}3500\ kPa} \underset{\text{CFC-113}}{C_2Cl_3F_3} + \underset{\text{CFC-114}}{C_2Cl_2F_4} + HCl$$

$$\underset{\text{CFC-114}}{C_2Cl_2F_4} + Cl_2 \longrightarrow \underset{\text{CFC-115}}{C_2ClF_5} + \underset{\text{CFC-116}}{C_2F_6} + HCl$$

No other data were found on the CFC-115/CFC-116 production process or emissions therefrom. Therefore, this section will focus on the production of CFC-113 and CFC-114.

Process Description

Basic operations that may be used in the chlorofluorocarbon production process are shown in Figure 10. Perchloroethylene (Stream 1), liquid anhydrous HF (Stream 2), and chlorine (stream 3) are pumped from storage to the reactor, along with the recycled bottoms from the product recovery column (Stream 15) and the HF recycle stream (Stream 9). The reactor contains antimony pentachloride catalyst and is operated at temperatures ranging from 45 to 200°C and pressures of 100 to 3,500 kPa.[3]

Vapor from the reactor (Stream 4) is fed to a catalyst distillation column, which removes hydrogen chloride (HCl), the desired fluorocarbon products, and some HF overhead (Stream 6). Bottoms containing vaporized catalyst, unconverted and underfluorinated species, and some HF (Stream 5) are returned to the reactor. The overhead stream from the column (Stream 6) is condensed and pumped to the HCl recovery column.[3]

Anhydrous HCl by-product is removed overhead (Stream 7) from the HCl recovery column, condensed, and transferred to pressurized storage as a liquid. The bottoms stream from the HCl recovery column (Stream 8) is chilled until it separates into two immiscible phases: an HF phase and a denser fluorocarbon phase. These are separated in a phase separator. The HF phase (Stream 9), which contains a small amount of dissolved fluorocarbons, is recycled to the reactor. The denser phase (Stream 10), which contains the fluorocarbons plus trace amounts of HF and HCl, is evaporated and ducted to a caustic scrubber to neutralize the HF and HCl. The stream is then contacted with sulfuric acid and subsequently with activated alumina to remove water.[3]

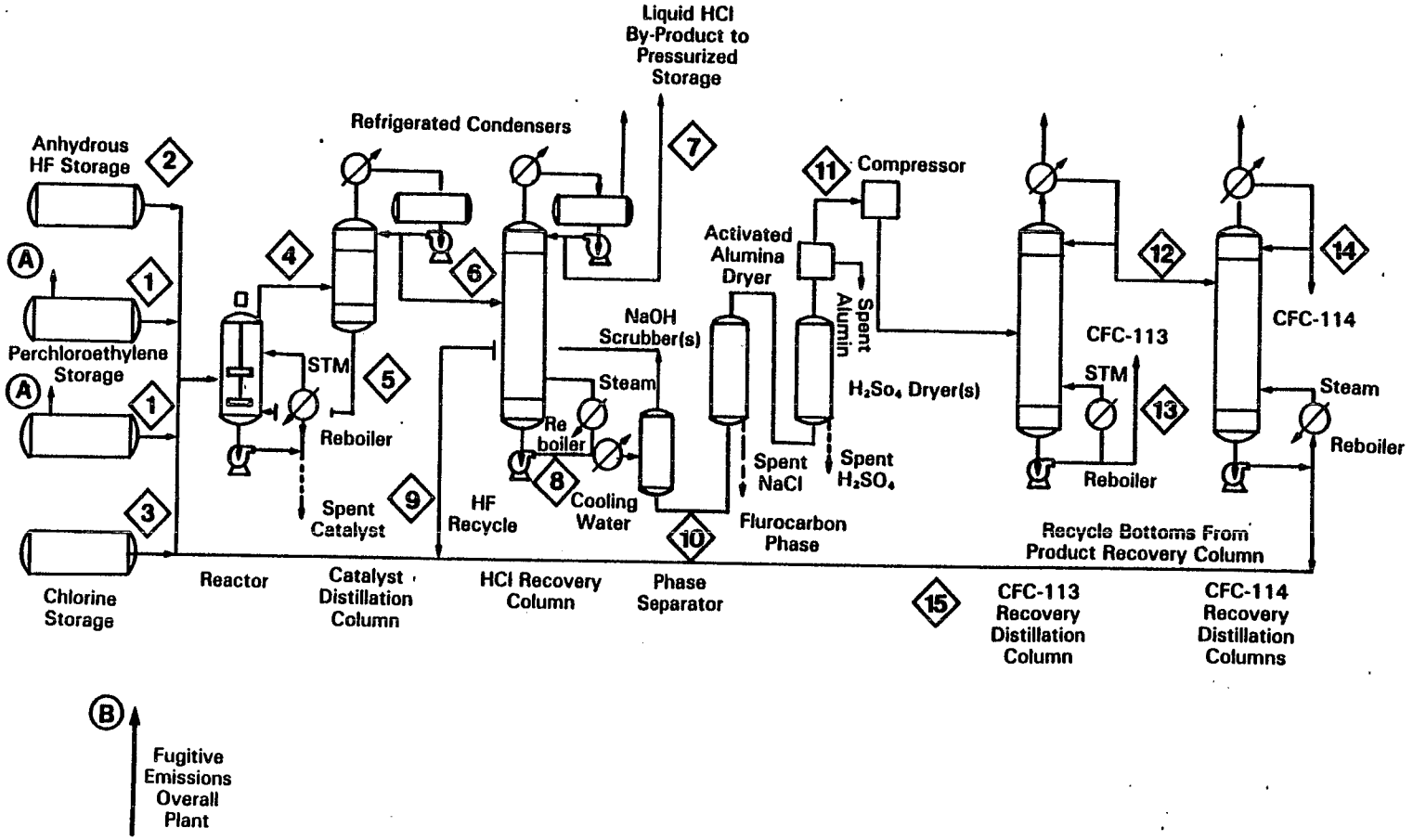

Figure 10. Basic operations that may be used in the production of CFC-113 and CFC-114.[3]

1081595R

The neutralized and dried fluorocarbon mixture (Stream 11) is compressed and sent to a series of two distillation columns. CFC-113 is taken off the bottom of the first distillation column and sent to pressurized storage (Stream 13). The overheads from the first distillation (Stream 12) are sent to the second distillation column, where CFC-114 is removed overhead and sent to pressurized storage (Stream 14). The bottoms from the second distillation (Stream 15) are recycled to the reactor.[3] The actual configuration of the distillation train for recovery of CFC-113 and CFC-114 may differ from the two-column operation presented in Figure 10.

There are a number of process variations in chlorofluorocarbon production. For example, HF is commonly separated from product chlorofluorocarbons prior to hydrogen chloride removal. In addition, the HCl removal system can vary with respect to the method of removal and the type of by-product acid obtained.[3]

Emissions

No PCE emissions have been reported from process vents during chlorofluorocarbon manufacture. Vents on the product distillation columns emit only fluorocarbons.[3,5,6] A vent on the hydrogen chloride recovery column accumulator purges noncondensibles and small amounts of inert gases which enter the reactor with the chlorine feed stream. No PCE emissions from this vent have been reported.[3,5,6]

One major source of PCE emissions during CFC-113/CFC-114 production is raw material storage (A in Figure 10). The PCE feedstock is generally stored in fixed-roof tanks.[5,6] Table 12 presents uncontrolled emission factors for storage emissions reported by one facility. Also presented in this table are potentially applicable control techniques and associated controlled emission factors. The uncontrolled emission factor, 0.28 kg/Mg, was calculated from a PCE storage emission rate of 4,400 kg/yr[7] and an associated CFC-113 production rate of 16,000 Mg/yr (calculated as shown in Appendix A).[1] If emissions were controlled by a contact internal floating roof, the estimated

PCE emission factor would be 0.0075 kg/Mg CFC-113 produced. This estimate is based on a controlled PCE emission rate of 660 kg/yr[7] and the associated CFC-113 production rate of 16,000 Mg/yr.[1] If emissions were controlled by a refrigerated condenser, the estimated PCE emission factor would be 0.041 kg/Mg CFC-113 produced. This emission factor was calculated from the uncontrolled PCE emission factor and an assumed condenser control efficiency of 85 percent.[7]

The other major sources of PCE emissions during chlorofluorocarbon manufacture are leaks from equipment components, such as pumps, valves, compressors, safety relief valves, flanges, open-ended lines, and sampling connections.[7] Table 12 presents PCE emission rates from equipment leaks for two CFC-113/CFC-114 production plants.[7] Based on an equipment count provided by each plant and SOCMI equipment leak emission factors, the uncontrolled equipment leak emission rates were estimated using the average emission factor method. More accurate emission estimates can be obtained by using other methods such as the leak/no-leak or the three-strata emission factor method. These methods use other data to obtain better emission estimates and are described in Protocols for Generating Unit-Specific Emission Estimates for Equipment Leaks of VOC and VHAP (EPA-450/3-88-010).

The control options available for equipment leaks include a monthly leak detection and repair program, venting compressor degassing reservoirs to a combustion device, using rupture discs on pressure relief devices, using closed-purge sampling, and capping open-ended lines. For the two plants in Table 12, the implementation of all these control options would reduce equipment leak emissions overall by roughly 60 percent.[7]

Other potential sources of PCE emissions include loading/handling operations and equipment openings. One chlorofluorocarbon plant reported no emission from these sources.[6,7] Another plant reported annual PCE emissions in 1983 of 0.02 Mg and 0.03 Mg from handling and equipment openings, respectively.[6,8] These emissions together represented less than one percent of the total estimated PCE emissions from that facility. Production data were not available to calculate emission factors for the plant.

TABLE 12. ESTIMATED CONTROLLED AND UNCONTROLLED PERCHLOROETHYLENE EMISSION FACTORS FOR EXISTING FACILITIES PRODUCING CHLOROFLUOROCARBON 113 and 114[a,b]

Emission Source	Uncontrolled PCE Emission Factor[c]	Potentially Applicable Control Technique	% Reduction	Controlled PCE Emission Factor[c]
Storage[d]	0.28 kg/Mg	Refrigerated condenser	85	0.041 kg/Mg[g]
		Contact internal floating roof	97	0.0075 kg/Mg
Equipment Leaks[e,f]	7.3 Mg/yr[h]	Monthly LDAR on valves and pump seals; vent compressor degassing reservoir to combustion device; rupture discs on relief devices; closed-purge sampling; cap open-ended lines[i]	58	3.1 Mg/yr

[a]Any given chlorofluorocarbon plant may vary in configuration and level of control. The emissions information presented in this table is based on 1983 data. The EPA does not have more recent data for these plants. The reader is encouraged to contact plant personnel to confirm the existence of emitting operations and control technology at a particular facility prior to estimating emissions therefrom.

[b]Based on emissions information presented in Reference 7.

[c]Emission factors in terms of kg/Mg refer to kilogram of PCE per megagram of CFC-113 produced.

[d]Storage emission factors based on information obtained for one existing plant only.

[e]Equipment leak emission rate independent of plant capacity.

[f]Emission estimates represent average for two existing CFC-113/CFC-114 production facilities. Uncontrolled equipment leak emissions for the two facilities range from 6.7 to 7.9 Mg/yr PCE; controlled equipment leak emissions range from 2.6 to 3.7 Mg/yr PCE.

[g]Calculated by applying control efficiency to the uncontrolled emission factor.

[h]Based on equipment count provided by plants and SOCMI equipment leak emission factors.

[i]LDAR = leak detection and repair.

Source Locations

A list of facilities producing CFC-113 and CFC-114 is presented in Table 13. One plant producing CFC-115 and CFC-116 is also listed.

POLYVINYL CHLORIDE (PVC) PRODUCTION

Trichloroethylene is used in PVC production as a reaction chain transfer agent to create low molecular weight polymers. The PVC suspension process is the only process that uses TCE in this manner. Trichloroethylene is used by about 15 percent of the companies employing the suspension process.[9] Most of the TCE is destroyed in the chain transfer reaction.

Process Description[10]

The suspension process for producing PVC resins is characterized by the formation of polymers in droplets of the liquid vinyl chloride monomer (or other co-monomers) suspended in water. These droplets are formed by agitation and the use of protective colloids or suspending agents. Protective colloids are water-soluble polymers such as modified cellulose or partially hydrolyzed polyvinyl acetate.

A flow diagram for the suspension process is shown in Figure 11. This process is represented by the following equation:

$$\underset{\text{VCM}}{CH_2CHCl} + \underset{\text{Vinyl Acetate}}{C_2HCHOCOC_3H} + H_2O + \underset{\text{TCE}}{C_2HCl_3} \longrightarrow \underset{\text{PVC}}{[-CH_2CHCl:CH_2CHCl:CH_2CHCl-]}$$

Water, vinyl chloride monomer (VCM) and protective colloids are charged to the polymerization reactor. Trichloroethylene is also added to the reactor in suspension processes using TCE as a chain transfer agent. The initiator is usually the last ingredient charged to the reactor. The initiators are soluble in VCM and allow formation of PVC in the monomer droplets.

TABLE 13. FACILITIES PRODUCING CHLOROFLUOROCARBONS 113, 114, 115, AND/OR 116 IN 1988

Company	Location	Compounds Produced			
		CFC-113	CFC-114	CFC-115	CFC-116
Allied-Signal, Inc. Allied Chemical Corp.	Baton Rouge, LA	X	X		
E.I. duPont de Nemours and Co., Inc.	Deepwater, NJ			X	X
	Corpus Christi, TX	X	X		
	Montague, MI	X			

NOTE: This list is subject to change as market conditions change, facility ownership changes, or plants are closed down. The reader should verify the existence of particular facilities by consulting current lists or the plants themselves. The level of emissions from any given facility is a function of variables such as throughput and control measures, and should be determined through direct contacts with plant personnel. These operating plants and locations were current as of January 1988.

SOURCE: Reference 5.

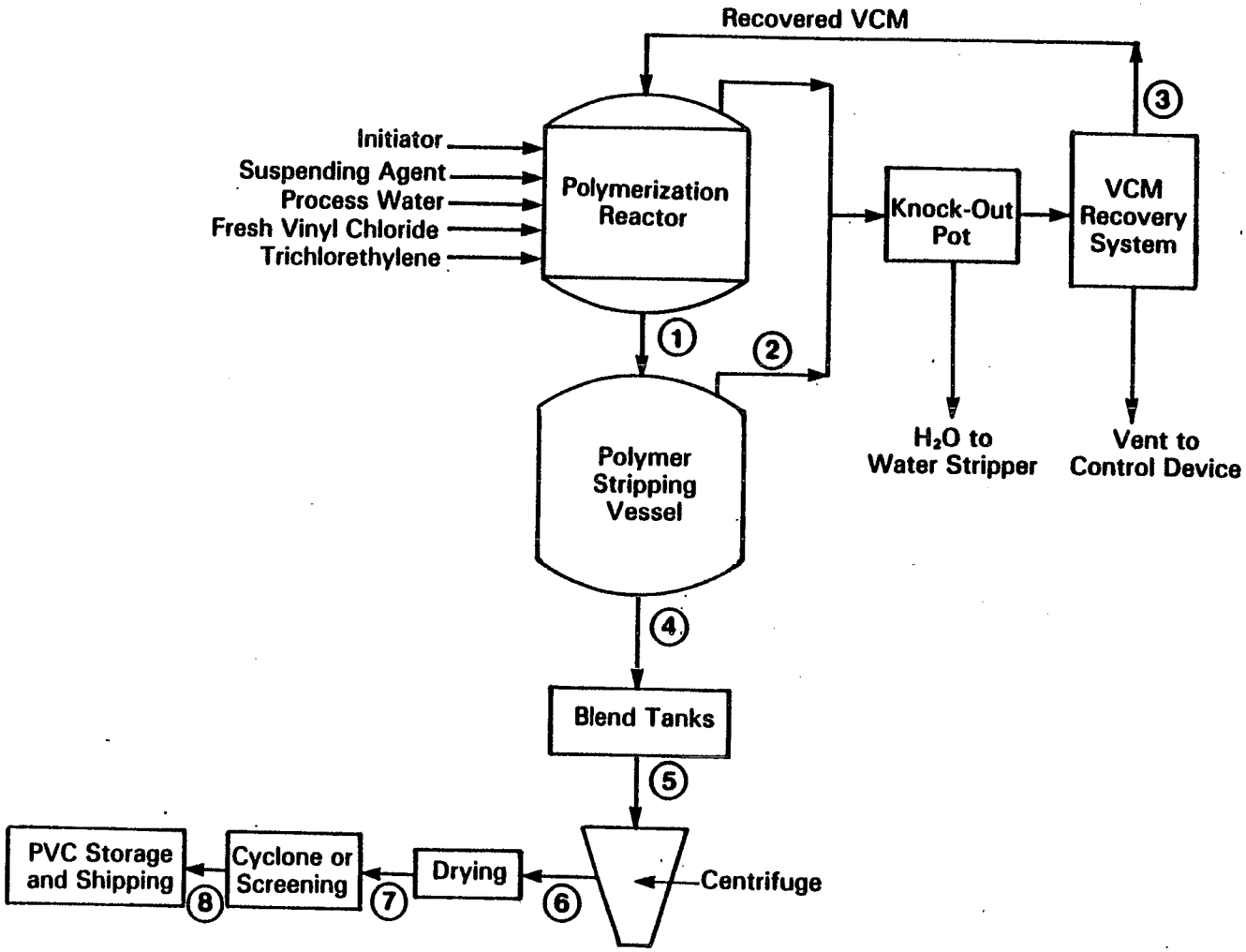

Figure 11. Basic operations for polyvinyl chloride production by suspension process using trichloroethylene as a reaction chain transfer agent. [10,11]

1081594R

Ingredients charged to the reactor must be carefully measured prior to charging because a level indicator for reactors has not been developed commercially. In some cases, the reactor is on a scale and the amount of material charged is weighed in the reactor. More often, a separate weight tank is used to measure materials charged to the reactor. Reactor operators manually charge additives that are used in small proportions.

After all materials are in the reactor, the batch is brought up to the reaction temperature by passing steam through the reactor jackets which allows free radical initiators to be formed. Reaction temperatures are varied to produce a resin grade of a particular molecular weight. Once polymerization is initiated, the reaction becomes exothermic and cooling water must be circulated through the reactor jacket to remove the heat of reaction.

After approximately 6 hours in the reactor, the batch temperature and pressure drop. This signifies that nearly all the VCM has reacted (75 percent to 90 percent of the VCM usually reacts).

Polyvinyl chloride resin, unreacted VCM (in the water, in the headspace, and trapped in the resin) and water are the constituents remaining in the polymerization reactor. Generally, this polymer slurry (Stream 1) is stripped of unreacted VCM (Stream 2) using steam and vacuum. This can be done in the reactor itself or in a separate vessel. The unreacted VCM is purified and recycled (Stream 3), and noncondensible gases are vented.

After stripping, the batch (Stream 4) is transferred to blend tanks which mix the batch with other batches to insure product uniformity. The mixed batches (Stream 5) are then fed to a continuous centrifuging operation that separates the polymer from the water in the slurry. Both mixing tanks and centrifuges are vented to the atmosphere if stripping is used. The centrifuge water is recycled back to the process or discharged to the plant's wastewater treatment system.

The wet cake (Stream 6) from centrifuging is conveyed to a rotary dryer for further removal of the remaining (usually 25 percent) moisture. Counter-current air temperatures in the dryer range from 65°C to 100°C. Drying time is generally short, but large volumes of air are released. After drying, the resin (Stream 7) may be screened to remove agglomerates. The resin (Stream 8) is then bagged or stored in piles for bulk shipment by trucks or rail car.

Emissions

Potential TCE emission sources during the PVC suspension process include:[12,13]

- o TCE unloading and storage,
- o opening of equipment for cleaning and maintenance,
- o pressure relief device discharges,
- o process vents, such as blending tank vents, monomer recovery system vents, and dryer exhaust vents,
- o equipment leaks from valves, flanges, pumps, compressors, relief devices, sample connections, and open-ended lines, and
- o secondary sources such as wastewater.

To maintain compliance with NESHAP requirements for vinyl chloride, many of these emission sources are controlled at PVC production plants. This has the indirect and added benefit of controlling potential TCE emissions to some extent. Table 14 identifies control technologies that can be applied to reduce emissions from PVC plants.[10]

An estimated 130 Mg of TCE were emitted in 1978 from PVC production processes using TCE as a reaction chain transfer agent.[12] The total TCE used in 1978 by these processes was estimated at 6,500 Mg. From these two values, total TCE emissions per unit TCE used in PVC production are estimated at 0.02 Mg/Mg. Data are not available on the derivation of the total annual TCE

TABLE 14. POTENTIAL EMISSION CONTROLS FOR PVC PLANTS[10]

Process Step	Potential Emission Points	Control Technology
VCM unloading and storage	Loading lines; VCM storage, mixing, weighing and holding tank vents	Purged to monomer recovery system, followed by incineration, solvent absorption or carbon adsorption
Polymerization	Polymerization reactor opening loss	Solvent cleaning, steam piston, water piston, reactor purge air blower, steam purge, etc., used before opening
		Vented to atmosphere or monomer recovery system
	Polymerization reactor relief valve discharges	Shortstop, containment, instrumentation, improved operator training, etc.
Stripping	Stripping vessel vent	Vented to monomer recovery system followed by incineration, solvent absorption or carbon adsorption
Monomer recovery system	Recovery system exhaust vents and knock-out pot	Gasholders used in some instances to collect all recovery vents and/or refrigeration to condense VCM followed by incineration, solvent absorption or carbon adsorption
Blending, mixing, weighing and holding after stripping operation	Slurry blend tanks and holding tank vents	Stripping
Drying, sizing, screening	Centrifuge vents, dryer vent stacks, storage silos, baghouse vents, screening operation vents	Stripping
PVC loading and storage	Storage silos	Stripping
"Inprocess" wastewater stripper	Wastewater storage tank Wastewater stripper column	VCM removed from wastewater by steam stripping in column or batch vessel, vented to monomer recovery system followed by incineration, solvent absorption or carbon adsorption
All of the above process steps	Fugitive emissions sources	Double mechanical seals, double outboard seals, rupture discs or equivalent equipment; closed systems and equipment purging to monomer recovery system, followed by incineration, solvent absorption or carbon adsorption; area monitors, portable monitors, routine leak surveys and maintenance programs

emissions estimate, nor are sufficient data available to determine the level of control that the emissions estimate reflects.

Reference 12 presents annual emissions estimates for one facility using TCE as a reaction chain inhibitor during the production of vinyl chloride/ vinyl acetate co-polymer. Total TCE emissions from the facility in 1983 were estimated to be 1.1 Mg. Of this, about 55 percent were secondary emissions, about 45 percent were equipment leaks, and about 2 percent were from TCE storage. Equipment opening emissions and relief device discharges each contributed less than one percent of total plant emissions. None of the emission sources were reported to be controlled. The facility also reported that a process vent was controlled with an incinerator and quench tank system with a control efficiency of greater than 98 percent. However, no TCE emissions were reported for this process vent.

The EPA does not have more recent data on emissions and control devices at PVC production facilities using TCE as a reaction chain transfer agent.

Source Locations

Table 15 lists producers of PVC resins. Data are not available to identify which facilities use TCE as a chain transfer agent.

TABLE 15. FACILITIES PRODUCING POLYVINYL CHLORIDE RESINS IN 1988

Company	Location
Air Products and Chemicals, Inc. Industrial Chemicals Division	Calvert City, KY Pensacola, FL
Borden Chemicals and Plastics	Geismar, LA Illiopolis, IL
CertainTeed Corporation	Lake Charles, LA
Formosa Plastics Corporation USA	Delaware City, DE Point Comfort, TX
Georgia Gulf Corporation	Delaware City, DE Plaquemine, LA
The BF Goodrich Company BF Goodrich Chemical Group	Avon Lake, OH Deer Park, TX Henry, IL Louisville, KY Pedricktown, NJ Plaquemine, LA
The Goodyear Tire & Rubber Company Chemical Division	Niagara Falls, NY
Keysor-Century Corporation	Saugus, CA
Occidental Petroleum Corporation Occidental Chemical Corporation, Subsidiary PVC Resins and Fabricated Products	Addis, LA Burlington, NJ Burlington, NJ Pasadena, TX Pottstown, PA

TABLE 15. (Continued)

Company	Location
SHINTECH Incorporated	Freeport, TX
Union Carbide Corporation Solvents and Coating Materials Division	Texas City, TX
Vista Chemical Company	Aberdeen, MS Oklahoma City, OK
Vygen Corp.	Ashtabula, OH

NOTE: This list is subject to change as market conditions change, facility ownership changes, or plants are closed down. The reader should verify the existence of particular facilities by consulting current lists or the plants themselves. These operating plants and locations were current as of January 1988.

NOTE: Emissions only occur when TCE is used as a chain transfer agent. Data are not available to identify which facilities use TCE. The level of emissions from any given facility that uses TCE is a function of variables such as throughput and control measures, and should be determined through direct contacts with plant personnel.

SOURCE: Reference 5.

REFERENCES FOR SECTION 6

1. Mannsville Chemical Products Corp. Chemical Products Synopsis - Fluorocarbons and Fluorocarbon Solvents. Asbury Park, New Jersey. 1984.

2. Hawley, G. G. The Condensed Chemical Dictionary, 10th ed. Van Nostrand Reinhold Company, Inc., New York, New York. 1981.

3. Pitts, D. M. Fluorocarbons (Abbreviated Report). (In) Organic Chemical Manufacturing, Volume 8: Selected Processes. EPA-450/3-80-028c. U.S. Environmental Protection Agency, Research Triangle Park, North Carolina. 1980.

4. U.S. Environmental Protection Agency. Survey of Perchloroethylene Emission Sources. EPA-450/3-85-017. Office of Air Quality Planning and Standards, Research Triangle Park, North Carolina. 1985.

5. SRI International. 1988 Directory of Chemical Producers. Menlo Park, California. 1988.

6. Letter and attachments from J. E. Cooper, Allied Corporation, to J. R. Farmer, EPA:ESED, April 2, 1985. Response to PCE Questionnaire.

7. Memorandum from K. Fidler, and L. Kinkaid, Radian Corporation, to Carbon Tetrachloride File, May 14, 1986. Estimates of Carbon Tetrachloride, Chloroform, and Perchloroethylene Emissions from Chlorofluorocarbon Production Facilities and Emission Reductions Achievable with Additional Control.

8. Letter and attachments from J. B. Coleman, Jr., E. I. duPont de Nemours and Company, to J. R. Farmer, EPA:ESED, January 30, 1985. Response to PCE Letter.

9. Telecon. Barr, J., Air Products Co., with P. B. Murphy, Radian Corporation, July 18, 1985. Information on TCE Usage in PVC Manufacturing.

10. TRW, Inc. Vinyl Chloride - A Review of National Emission Standards. EPA-450/3-82-003. U.S. Environmental Protection Agency, Research Triangle Park, North Carolina. 1982.

11. Khan, Z. S., and T. W. Hughes. Source Assessment: Polyvinyl Chloride. EPA-600/2-78-004i. U. S. Environmental Protection Agency, Cincinnati, Ohio. 1978.

12. U.S. Environmental Protection Agency. Survey of Trichloroethylene Emission Sources. EPA-450/3-85-021. Office of Air Quality Planning and Standards, Research Triangle Park, North Carolina. 1985.

13. Letter and attachments from R. R. Neugold, Tenneco Inc., to J. R. Farmer, EPA:ESED, November 18, 1985. Response to TCE Letter.

SECTION 7
EMISSIONS FROM INDUSTRIES USING TRICHLOROETHYLENE AND PERCHLOROETHYLENE AS SOLVENT

This section discusses emissions from major processes using TCE and/or PCE as a solvent. These processes include organic solvent cleaning; dry cleaning; paints, coatings, and adhesives manufacture and use; and aerosol products manufacture and use. In the United States, organic solvent cleaning (vapor) is the primary source of TCE emissions and dry cleaning is the major source of PCE emissions.

TRICHLOROETHYLENE AND PERCHLOROETHYLENE USE IN ORGANIC SOLVENT CLEANING

Organic solvent cleaning (degreasing) is an integral part of many industrial categories such as automobile manufacturing, electronics, furniture manufacturing, appliance manufacturing, textiles, paper, plastics, and glass manufacturing. Organic solvent cleaners use organic solvents to remove water-insoluble soils (such as oils, greases, waxes, carbon deposits, fluxes, tars, or other debris) from surfaces prior to processes such as painting, plating, repair, inspection, assembly, heat treatment or machining. Various solvents, including petroleum distillates, chlorinated hydrocarbons, ketones, and alcohols, are used alone or in blends for solvent cleaning operations.[1] About 90 percent of the TCE and 15 percent of the PCE supply in 1987 was used in solvent cleaning.[2,3] Both PCE and TCE are especially applicable to cleaning and drying metal parts in the industries mentioned above.

Process Description

There are three basic types of solvent cleaning equipment: open top vapor cleaners (OTVC), conveyorized (often called in-line) cleaners and cold cleaners.

A typical OTVC consists of a tank equipped with a heating system and cooling coils. Heating elements on the inside bottom of the tank boil liquid solvent, generating the vapors needed for cleaning. Cooling coils located on the inside perimeter of the tank above the liquid level condense the solvent vapors, creating a controlled vapor zone which prevents vapors from flowing out of the tank. Soiled objects are lowered into the vapor zone where solvent condenses on their surfaces and dissolves the soils. Only halogenated solvents are used in the vapor phase for cleaning (or other applications) because they have excellent cleaning properties, are essentially nonflammable, and the heavy vapors produced can be easily contained within the machine.[1,4]

In-line cleaners feature automated conveying systems for continuous cleaning of parts. In-line machines clean either by cold or vapor cleaning, although most use the latter. The same basic cleaning techniques are used for in-line cleaning as with OTVC but usually on a larger scale. Although in-line cleaners tend to be the largest, they emit less solvent per part cleaned than other types of cleaners because they are usually enclosed systems, operate continuously, and feature automated parts handling.[1,4]

Cold cleaners are usually the simplest and least expensive type of cleaner. Spraying, flushing, wiping, and immersion are often employed with these cleaners to enhance cleaning ability. It should be noted, however, that TCE and PCE use in cold cleaning appears to be limited. Discussions with the major cold cleaner manufacturers indicate that TCE and PCE are not used in cold cleaning to a significant extent. None of these manufacturers currently sells, or has recently sold, units for use with solvents other than methylene chloride (part of a carburetor cleaner solution) and nonhalogenated solvents. Although there may be some older units that use other halogenated solvents, the total number of these units nationwide is negligible.

Emissions

Solvent evaporation occurs both directly and indirectly with all types of solvent cleaning equipment. Major causes of emissions include loss of solvent vapor from the tank due to diffusion and convection, and evaporation of solvent on cleaned parts as they are withdrawn from the machine. Leaks from the cleaner or associated equipment and losses from solvent storage and transfer are other significant sources of emissions. The quantity of emissions varies, depending upon the type, design, and size of equipment, the hours of operation, operating techniques, and the type of material being cleaned. Emissions are ultimately a function of solvent use, therefore, techniques and practices designed to conserve solvent use are beneficial in reducing atmospheric emissions.

Potential control methods for organic solvent cleaners include add-on equipment and improved operating practices. Add-on equipment can be as simple as adding covers to equipment openings, enclosing equipment, increasing freeboard height, adding freeboard refrigeration devices, and using automated parts handling systems. These devices limit diffusional and convective losses from solvent tanks and evaporative losses due to solvent carry-out. More sophisticated control techniques include carbon adsorption systems to recover solvent vapors.

Operating practices can be improved to limit solvent emissions from solvent cleaning. These improvements, characterized by practices that reduce solvent exposure to the atmosphere, include: minimizing open surface area, keeping cleaner covers closed, fully draining parts prior to removal from cleaner, maintaining moderate conveyor speeds, keeping ventilation rates moderate, using a coarse spray or solid stream of solvent instead of a fine spray, not using compressed air sprays to blow-dry parts or to mix cleaning baths, and by placing wipe rags in a closed container and reusing them whenever possible. The emission reductions achievable through the use of control devices vary depending on the operating schedule of the machine. For example, an OTVC that is used constantly throughout the day will have a

greater reduction in total emissions from a control that reduces working emissions (such as an automated parts handling system) than an OTVC that is idle for the majority of the day.

In vapor cleaning, improper heat balance, air currents, high water content, and solvent degradation are the primary factors that cause solvent losses and necessitate greater virgin solvent use. Equipment configurations and operational practices that abate the problems will be useful in reducing potential solvent emissions from vapor cleaning. Conservation practices for vapor cleaners as recommended by a major cleaning solvent manufacturer are summarized below.[5]

1. Use least amount of heat necessary to keep solvent at a boil and provide adequate vapor production.
2. Regulate cooling level by water temperature or flow rate adjustments.
3. Monitor water jacket temperature and flow rate to prevent migration of hot solvent vapor up cleaner side walls.
4. Use cold coil traps to lessen vapor losses.
5. Use covers, especially during idle periods, on open-top cleaners.
6. Avoid drafts over the cleaner by locating the unit to minimize natural drafts or use baffles to prevent vapors from being disturbed.
7. Extend the freebound height of the cleaner.
8. Spray in the vapor zone of the cleaner to minimize the generation of a vapor-air mixture and the disruption of the vapor interface.
9. Use minimum exhaust velocity necessary to provide proper vapor control in the work area.
10. Arrange air movement in the room to minimize wind tunnel effects.
11. Avoid rapid parts or basket movement in the vapor zone.
12. Minimize the level of dissolved water in the solvent.

13. Minimize the introduction of water to prevent the depletion of solvent stabilizers.

14. Have a separate water trough for refrigerated coils.

15. Minimize corrosion and remove visible signs of it to minimize solvent decomposition.

16. Monitor and maintain solvent stabilizers, inhibitors, and acid acceptors.

17. Remove metal parts, fines, and sludge to prevent stabilizer depletion and in turn solvent decomposition.

18. Avoid high oil concentration build-up.

19. Minimize solvent carry-out on parts.

20. Bring parts to vapor temperature prior to removal to minimize dragout.

21. Do not overload the cleaning capacity of the cleaner.

22. Use properly sized baskets in the cleaner to reduce vapor-air mixing.

23. Do not expose heating coils to solvent vapor.

24. Use only clean or non-porous materials in the cleaning process.

25. Operate a cleaner leak detection and repair program.

Tables 16 and 17 present uncontrolled emission factors, applicable control techniques, their associated control efficiencies, and controlled emission factors for each type of solvent cleaner.[1,6] Table 16 presents control efficiencies and controlled emission factors for solvent cleaners that are used for a relatively small fraction of the day (Schedule A). Table 17 presents control efficiencies and controlled emission factors for solvent cleaners that are used more regularly. The controlled emission factors were derived using a material balance approach based on the uncontrolled emission factors reported in Reference 5 and control efficiencies reported in Reference 1. See Appendix A for an example calculation.

TABLE 16. TRICHLOROETHYLENE AND PERCHLOROETHYLENE EMISSION FACTORS FOR ORGANIC SOLVENT CLEANING, SCHEDULE A[a,b]

Cleaner Type	Uncontrolled Emission Factor[c] (kg/kg) TCE	PCE	Potential Control System	Emission Reduction Efficiency (%)[d] TCE	PCE	Controlled Emission Factor[e,f] (kg/kg) TCE	PCE
OTVC[f]	0.93	0.93	Hoist at 11 fpm; Freeboard Refrigeration Device, (below freezing), 1.0 FBR[h,k]	40-50	40-50	0.89	0.87
			Hoist at 11 fpm; Enclosed Design; Sump Cooling	70-80	70-80	0.80	0.73
			Hoist at 11 fpm; Automated Cover	30-40	30-40	0.90	0.89
			Hoist at 3 fpm; Freeboard Refrigeration Device, (below freezing), 1.0 FBR	50-60	50-60	0.87	0.84
			Hoist at 3 fpm; Enclosed Design; Sump Cooling	80-90	80-90	0.73	0.57
			Hoist at 3 fpm; Automated Cover	40-50	40-50	0.89	0.87
Conveyorized Vapor Cleaner	0.96	0.96	Freeboard Refigeration Device	50	50	0.92	0.92
			Carbon Adsorption	50	50	0.92	0.92
			Carbon Adsorption, Sump Cooling	65	65	0.89	0.89
			Freeboard Refigeration Device Sump Cooling	65	65	0.89	0.89
			Hot Vapor Recycle or Superheated Vapor; Sump Cooling	70	70	0.88	0.88
			Freeboard Refrigeration; Hot Vapor Recycle or Superheated Vapor	70	70	0.88	0.88

TABLE 16. TRICHLOROETHYLENE AND PERCHLOROETHYLENE EMISSION FACTORS FOR ORGANIC SOLVENT CLEANING, SCHEDULE A[a,b] (CONTINUED)

Cleaner Type	Uncontrolled Emission Factor[c] (kg/kg)		Potential Control System	Emission Reduction Efficiency (%)[d]		Controlled Emission Factor[e,f] (kg/kg)	
	TCE	PCE		TCE	PCE	TCE	PCE
Cold Cleaner[f,i]	0.84	0.78	0.7 Freeboard Ratio and Drainage Rack with 15-second Drain Time[j,k]	15	13	0.82	0.76
			Water Cover and 15-second Drain Time	50	40	0.72	0.68

[a]Reference 6.

[b]OTVC Schedule A: 6 hours idling; 2 hours working; 16 hours downtime; 5 days/week; 52 weeks/year.
In-line Schedule A: 8 hours working; 16 hours downtime; 5 days/week; 52 weeks/year.

[c]Emission factors in terms of kg/kg refer to kilograms of solvent emitted per kilogram of fresh solvent used. All factors account for the recovery and reuse of solvent contained in cleaner waste solvent streams.

[d]Emission factors in terms of kg/kg refer to kilograms of solvent emitted per kilogram of controlled fresh solvent use. All factors account for the recovery and reuse of solvent contained in cleaner waste solvent streams.

[e]Reference 7.

[f]Controlled emission factors were derived using a material balance approach based on the uncontrolled emission factors and control efficiencies reported in Reference 6. See Appendix A for an example calculation.

[g]An uncontrolled OTVC is assumed to have a manual cover and 0.75 freeboard ratio. An uncontrolled cold cleaner is assumed to have a 0.4 freeboard ratio, a 5-second drain time, and a cover.

[h]Freeboard refrigeration devices are additional cooling coils above the primary coils to further inhibit the diffusion of solvent vapors to the atmosphere.

[i]The use of PCE and TCE in cold cleaners is negligible.

[j]This control scenario is equivalent to controls required by State regulations based on CTG control system B.

[k]Freeboard ratio is an index for freeboard height and is equal to the freeboard height divided by the cleaner width. The freeboard height is the distance from the liquid solvent surface or top of the vapor to the lip of the tank. Increasing the freeboard height decreases drafts, and thereby solvent diffusion, within the cleaner.

TABLE 17. TRICHLOROETHYLENE AND PERCHLOROETHYLENE EMISSION FACTORS FOR ORGANIC SOLVENT CLEANING, SCHEDULE B[a,b]

Cleaner Type	Uncontrolled Emission Factor[c] (kg/kg) TCE	Uncontrolled Emission Factor[c] (kg/kg) PCE	Potential Control System	Emission Reduction Efficiency (%)[d] TCE	Emission Reduction Efficiency (%)[d] PCE	Controlled Emission Factor[e,f] (kg/kg) TCE	Controlled Emission Factor[e,f] (kg/kg) PCE
OTVC[f]	0.93	0.93	Hoist at 11 fpm; Freeboard Refrigeration Device, (below freezing), 1.0 FBR[h,k]	50-70	50-70	0.80-0.87	0.80-0.87
			Hoist at 11 fpm; Enclosed Design; Sump Cooling	70-80	70-80	0.73-0.80	0.73-0.80
			Hoist at 11 fpm; Automated Cover	50-60	50-60	0.84-0.87	0.84-0.87
			Hoist at 3 fpm; Freeboard Refrigeration Device, (below freezing), 1.0 FBR	80	80	0.73	0.73
			Hoist at 3 fpm; Enclosed Design; Sump Cooling	90	90	0.57	0.57
			Hoist at 3 fpm; Automated Cover	80	80	0.73	0.73
Conveyorized Vapor Cleaner	0.96	0.96	Freeboard Refigeration Device	60	60	0.90	0.90
			Carbon Adsorption	60	60	0.90	0.90
			Carbon Adsorption, Sump Cooling	60	60	0.90	0.90
			Freeboard Refigeration Device Sump Cooling	60	60	0.90	0.90
			Hot Vapor Recycle or Superheated Vapor; Sump Cooling	85	85	0.78	0.78
			Freeboard Refrigeration; Hot Vapor Recycle or Superheated Vapor	85	85	0.78	0.78

TABLE 17. TRICHLOROETHYLENE AND PERCHLOROETHYLENE EMISSION FACTORS FOR ORGANIC SOLVENT CLEANING, SCHEDULE B[a,b] (CONTINUED)

Cleaner Type	Uncontrolled Emission Factor[c] (kg/kg) TCE	PCE	Potential Control System	Emission Reduction Efficiency (%)[d] TCE	PCE	Controlled Emission Factor[e,f] (kg/kg) TCE	PCE
Cold Cleaner[f,i]	0.84	0.78	0.7 Freeboard Ratio and Drainage Rack with 15-second Drain Time[g,k]	15	13	0.82	0.76
			Water Cover and 15-second Drain Time	50	40	0.72	0.68

[a] Reference 6.

[b] OTVC Schedule B: 4 hours idling; 12 hours working; 8 hours downtime; 5 days/week; 52 weeks/year. In-line Schedule B: 16 hours working; 8 hours downtime; 7 days/week; 52 weeks/year.

[c] Emission factors in terms of kg/kg refer to kilograms of solvent emitted per kilogram of fresh solvent used. All factors account for the recovery and reuse of solvent contained in cleaner waste solvent streams.

[d] Emission factors in terms of kg/kg refer to kilograms of solvent emitted per kilogram of controlled fresh solvent use. All factors account for the recovery and reuse of solvent contained in cleaner waste solvent streams.

[e] Reference 7.

[f] Controlled emission factors were derived using a material balance approach based on the uncontrolled emission factors and control efficiencies reported in Reference 6. See Appendix A for an example calculation.

[g] An uncontrolled OTVC is assumed to have a manual cover and 0.75 freeboard ratio. An uncontrolled cold cleaner is assumed to have a 0.4 freeboard ratio, a 5-second drain time, and a cover.

[h] Freeboard refrigeration devices are additional cooling coils above the primary coils to further inhibit the diffusion of solvent vapors to the atmosphere.

[i] The use of PCE and TCE in cold cleaners is negligible.

[j] This control scenario is equivalent to controls required by State regulations based on CTG control system B.

[k] Freeboard ratio is an index for freeboard height and is equal to the freeboard height divided by the cleaner width. The freeboard height is the distance from the liquid solvent surface or top of the vapor to the lip of the tank. Increasing the freeboard height decreases drafts, and thereby solvent diffusion, within the cleaner.

All the emission factors presented in Tables 16 and 17 are based on fresh solvent input. These factors account for the recovery and reuse of solvent contained in cleaner waste solvent streams. This recycling of waste solvent results in a reduction in the amount of fresh solvent required for a given cleaning application, but the percentage of fresh solvent usage that is ultimately emitted from the cleaning process is higher.[6]

The controlled emission factors, like the uncontrolled factors, are expressed as kg solvent emitted per kg fresh solvent used. It is important to note; however, that the emission controls for solvent cleaners cause both a reduction in solvent use and a reduction in the fraction of solvent that is emitted to the air (as illustrated in Appendix A, Section A-2). The controlled emission factors refer only to kg solvent emitted per kg of controlled fresh solvent used; therefore, these factors should not be applied to estimates of uncontrolled solvent use to derive estimates of controlled emissions.

Source Locations

Five major industry groups use TCE and PCE in degreasing operations. These are furniture and fixtures (SIC 25), fabricated metal products (SIC 34), electronic and electronic equipment (SIC 36), transportation equipment (SIC 37), and miscellaneous manufacturing industries (SIC 39).[7,8] Because of the large number of vapor degreasers, the locations of individual facilities are not identified.

DRY CLEANING

Approximately 50 percent of the PCE consumed in the United States is used as a dry cleaning solvent.[2]

Process Description[9,10]

The principle steps in the PCE dry cleaning process are identical to those of laundering in water, except that PCE is used instead of soap and water. Two types of machines are used for PCE dry cleaning: transfer and dry-to-dry. For transfer machines, clothes are washed in one unit and then transferred to a separate unit to be dried. For dry-to-dry machines, clothes are washed and dried in a single unit, which eliminates the clothing transfer step.

A typical PCE dry cleaning plant is shown schematically in Figure 12. The dry cleaning process involves the following major process steps: charging, washing, extraction, drying, and aeration. Before the cleaning cycle begins, small amounts of detergent and water are added to the cleaning solvent in the charging step. The detergent and water remove water-soluble dirts and soils from fabrics during washing, and thus, improve the cleaning capability of the solvent.

To begin the washing step, clothes are loaded manually into the perforated steel drum of the washer. Charged solvent is added and then clothes and solvent are agitated by rotation of the drum. After the washing step is complete, the drum spins at high speeds to remove the solvent through perforations in the drum. This step is called extraction.

Next, the clothes are tumbled dry. In this step, recirculating warm air causes most of the remaining solvent in the clothes to vaporize. The PCE-laden drying air stream is condensed by the water condenser and recycled to the tumbler, with no exhaust gas stream vented to the atmosphere. Recovered solvent is returned to the pure solvent tank for recycle. After drying, fresh ambient air is passed through the machine to freshen and deodorize the clothes. This process is called aeration. The PCE-laden air from this step may be vented to a control device or emitted directly to the atmosphere.

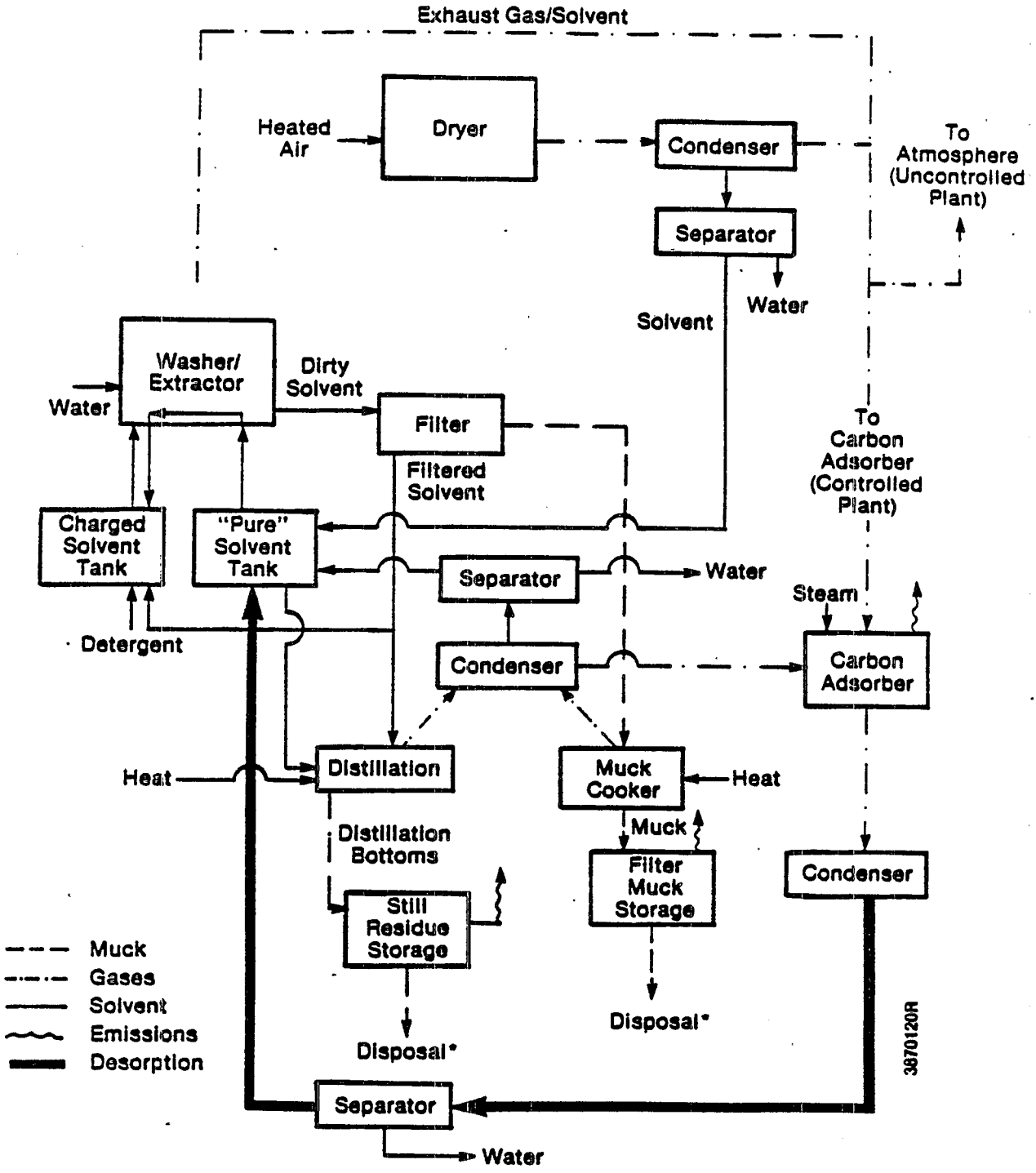

*Currently regulated as a RCRA hazardous waste.

Figure 12. Schematic of perchloroethylene dry cleaning plant. [9]

Most machines are equipped with inductive fans that are turned on when the washer and dryer doors are opened. During the loading and unloading of clothes, these fans divert the PCE-laden vapors away from dry cleaning operators and pull them through the dry cleaning machine. The gas stream is then either vented directly out the stack or through a control device.

Efficient operation of dry cleaning plants necessitates at least partial recovery and reuse of used solvent. There are several pieces of auxiliary equipment used at most dry cleaning plants for recovery and purification of PCE. These include filters that remove dirt from the PCE circulating through the washer, and stills that purify the PCE by distillation.

As shown in Figure 12, dirty PCE from the washer is typically passed through a filtration system. The filtration process removes most insoluble soils, nonvolatile residue and dyes. For plants using regenerative or tubular filters, the solids or "muck" are removed from the filters each day. The muck contains solvent that is recovered by distillation in a muck cooker. The recovered PCE is condensed, separated, and then returned to the solvent storage tank. The muck solid waste is stored and then disposed of. For plants using cartridge filters, spent filters are generally drained and then disposed of.

Following filtration, the solvent may either flow back to the solvent storage tank or to the distillation unit. Distillation removes soluble oil, fatty acids, and greases not removed by filtration. During distillation, the PCE is vaporized and the residues are retained in the distillation bottoms. The vaporized PCE is condensed, separated, and then returned to the solvent storage tank. The distillation bottoms are stored prior to disposal.

Emissions

Potential sources of process emissions include losses during aeration and emissions ducted out the stack during clothing transfer. There are no process emissions during other parts of the dry cleaning cycle (i.e., wash

cycle, dry cycle) because exhaust gases are not vented to the atmosphere during those operations.[10] Two control techniques used by the industry for process emissions are refrigerated condensers and carbon absorbers. Carbon adsorbers reduce process vent emissions by about 95 percent or more,[9] and refrigerated condensers reduce emissions by about 70 percent.[11]

Fugitive emissions include PCE losses from leaky process equipment (pumps, valves, flanges, seals, etc.), emissions of PCE from spent cartridge filters and PCE-laden solid waste, and in-plant evaporative losses of PCE during clothing transfer and handling. Other potential emissions include losses from water separators, emissions from distillation units and muck cookers, and losses from solvent retained in discarded solid wastes.[9,10] The control techniques used for fugitive emissions include housekeeping procedures such as detecting, repairing, and preventing leaks, and minimizing the exposure of PCE-laden clothes to the atmosphere. These procedures have been detailed in References 9 and 12 and are reported to be widely used.[10]

Table 18 presents emission factors for transfer and dry-to-dry machines. The factors are shown for three levels of process emission control: uncontrolled trolled, refrigerated condenser-controlled, and carbon adsorber-controlled. Neither the amount of solid waste generated nor fugitive emissions are affected by the addition of process vent controls, so they are equal for controlled and uncontrolled machines.

Source Locations

The dry cleaning industry is composed of three sectors: commercial, industrial, and coin-operated. Commercial plants are classified under Standard Industrial Classification (SIC) code 7216. Industrial and coin-operated plants are classified under SIC 7218 and SIC 7215, respectively. Because of the large number of facilities in the United States, no attempt has been made to identify the locations and names of facilities.

TABLE 18. EMISSION FACTORS FOR THE PERCHLOROETHYLENE DRY CLEANING INDUSTRY[a]

(kg PCE/100 kg clothes cleaned)

Machine Type	Process Vent Control Status	Emission Source			
		Process	Solid Waste[b]	Fugitive[c]	Total
Dry-to-Dry	Uncontrolled	5.26	0.62	2.06	7.94
	Refrigerated Condenser[d]	1.58	0.62	2.06	4.26
	Carbon Adsorber[e]	0.26	0.62	2.06	2.94
Transfer	Uncontrolled	5.26	0.62	4.12	10.00
	Refrigerated Condenser[d]	1.58	0.62	4.12	6.32
	Carbon Adsorber[e]	0.26	0.62	4.12	5.00

[a]Reference 11

[b]Solvent retained in discarded solid wastes; it is assumed that this solvent is eventually released to the atmosphere.

[c]Fugitive emissions were assumed to equal total emissions minus process emissions and solid waste.

[d]Based on 70 percent control efficiency.

[e]Based on 95 percent control efficiency.

Commercial facilities account for 71 percent of the PCE used in dry cleaning; industrial facilities for 11 percent; and coin-operated for 18 percent. Coin-operated facilities are usually small self-service facilities that are associated with neighborhood laundromats. Only synthetic cleaning solvents (no petroleum solvents) are used at coin-operated plants and PCE is the primary solvent used. All coin-operated plants have dry-to-dry units where clothes are washed and dried in a single unit. Commercial dry cleaners are typically small facilities offering non-self-service cleaning, including small neighborhood shops, franchise shops, and specialty cleaners. Of commercial dry cleaners, 73 percent use PCE, 24 percent use petroleum solvents, and 3 percent use trichlorotriflouro-ethane. Most machines are transfer machines where clothes are washed in one unit and transferred to a separate unit for drying. Industrial cleaners are large facilities that clean items for rental services. Forty to 45 percent of industrial cleaners have dry cleaning equipment and 50 percent of these use PCE. A typical industrial facility has one 250 kg per load capacity washer/extractor and three to six 38 kg capacity dryers.

PAINTS, COATINGS, AND ADHESIVES

Both TCE and PCE are used as solvents in paints, coatings, and adhesives. In 1983, approximately 520 Mg of TCE and 1,700 Mg of PCE were used to manufacture paints and coatings. In addition, an estimated 420 Mg of TCE and 2,800 Mg of PCE were used to manufacture adhesives.[8,13]

Solvent emissions from paints, coatings, and adhesives occur through evaporation upon application. Therefore, it is estimated that all TCE and PCE used in these applications is eventually emitted to the atmosphere.[7,8]

No data were found on the emissions of TCE or PCE during the manufacture of paints, coatings, and adhesives. The Standard Industrial Classification (SIC) code for paint and allied product manufacturing is 285; the SIC code for adhesives and sealants manufacturing is 2891.

AEROSOLS

Perchloroethylene is used as a solvent and carrier in aerosol products such as spray paints and cleaners.[14,15] Facilities packaging aerosols consumed about 2,630 Mg of PCE in 1985.[16] Some aerosol products contain TCE, but insufficient data exist to quantify the extent of TCE use. Overall, TCE use in these products is believed to be negligible.[16] Therefore, this section discusses only PCE emissions during aerosol packaging and use.

The total PCE emitted in 1985 from five packaging facilities using PCE was about 5.4 Mg.[15] The total PCE consumed by these facilities was about 1,470 Mg.[16] From these two values, the uncontrolled emission factor for aerosol packaging is estimated to be 3.7 kg/Mg consumed. Of the uncontrolled emissions, approximately 81 percent were from handling (primarily mixing tank) operations, 17 percent were from equipment leaks, and 2 percent were from storage tanks.[15] Other potential sources include wastewater emissions and accidental releases.

During use of aerosol products, PCE is released by evaporation after application (or by direct release in the gaseous phase). Consequently, it is assumed that 100 percent of PCE used in aerosol applications is emitted to the atmosphere.[7]

REFERENCES FOR SECTION 7

1. U.S. Environmental Protection Agency. Alternative Control Technology Document - Halogenated Solvent Cleaners. EPA-450/3-89-030. Office of Air Quality Planning and Standards, Research Triangle Park, North Carolina. August 1989.

2. Mannsville Chemical Products Corp. Chemical Products Synopsis - Perchloroethylene. Asbury Park, New Jersey. 1987.

3. Mannsville Chemical Products Corp. Chemical Products Synopsis - Trichloroethylene. Asbury Park, New Jersey. 1987.

4. GCA Corporation. Organic Solvent Cleaners - Background Information for Proposed Standards. EPA-450/2-78-045a. U.S. Environmental Protection Agency, Research Triangle Park, North Carolina. 1979.

5. Dow Chemical Company. Waste Minimization for Chlorinated Solvent Users. Chemicals and Metals Department, Midland, Michigan. June 1988.

6. Memorandum from R. C. Mead, Radian Corporation, to D. A. Beck, U.S. Environmental Protection Agency, September 3, 1987. Documentation of Emissions and Long-term Exposure Model Inputs for the Organic Solvent Cleaning Source Category.

7. U.S. Environmental Protection Agency. Survey of Perchloroethylene Emission Sources. EPA-450/3-85-017. Office of Air Quality Planning and Standards, Research Triangle Park, North Carolina. 1985.

8. U.S. Environmental Protection Agency. Survey of Trichloroethylene Emission Sources. EPA-450/3-85-021. Office of Air Quality Planning and Standards, Research Triangle Park, North Carolina. 1985.

9. U.S. Environmental Protection Agency. Perchloroethylene Dry Cleaners - Background Information for Proposed Standards. EPA-450/3-79-029a. Emission Standards and Engineering Division, Research Triangle Park, North Carolina. 1980.

10. Memorandum from R. L. Ajax and S. R. Wyatt, U.S. Environmental Protection Agency, to J. R. Farmer, U.S. Environmental Protection Agency, August 27, 1986. Information Memorandum - Emissions of Perchloroethylene from Dry Cleaning Operations. Attachment A.

11. Memorandum from E. C. Moretti, Radian Corporation, to Perchloroethylene Dry Cleaning Project File, March 25, 1988. Documentation of Emission Factors for the Perchloroethylene Dry Cleaning Industry.

12. U.S. Environmental Protection Agency. Control of Volatile Organic Emissions from Perchloroethylene Dry Cleaning Systems. EPA-450/2-78-050. Office of Air Quality Planning and Standards, Research Triangle Park, North Carolina. 1978.

13. Letter from D. L. Morgan, Cleary, Gottlieb, Steen, and Hamilton, to R. E. Rosensteel, U.S. Environmental Protection Agency, March 1, 1985. HSIA Data on Perchloroethylene Production and Consumption.

14. Maklan, D. M., D. H. Steele, S. K. Dietz, G. L. Brown, and S. Fallah. Household Products Containing Methylene Chloride and Other Chlorinated Solvents: "A Shelf Survey." EPA-OTS 560/5-87-006. U.S. Environmental Protection Agency, Washington, D.C. 1987.

15. Memorandum from J. Martinez, R. Wassel, and G. Bockol, Radian Corporation, to File of Aerosol Manufacturing - Packagers, Formulators, and Users Work Assignment, October 13, 1987. Emission Estimates and Controls Memorandum for Emissions from those Aerosol Packaging Facilities Responding to Section 114 Questionnaires.

16. Memorandum from E. C. Moretti, Radian Corporation, to Aerosol Packagers Project File, January 19, 1988. Documentation of Baseline and Controlled Emission Parameters for Aerosol Packagers.

SECTION 8
OTHER POTENTIAL SOURCES OF TRICHLOROETHYLENE AND PERCHLOROETHYLENE EMISSIONS

This section summarizes information on other potential sources of TCE and PCE emissions. These sources include (1) distribution facilities, (2) publicly owned treatment works (POTW), and (3) unidentified or miscellaneous uses.

DISTRIBUTION FACILITIES[1,2]

Roughly 70 percent of PCE and nearly all TCE produced is sold through chemical distributors. There are an estimated 300 chemical distributors handling chlorinated solvents. Table 19 presents the five largest TCE distributors and the three largest PCE distributors. Data are not available to identify all distribution facilities handling these solvents.

In general, distributors maintain as few as three to as many as 65 regional distribution facilities spread out across the nation. Each regional distributor receives chemicals directly from the producer by tank truck or railcar. Transportation is provided by the distributor. The received chemicals are stored by regional distributors in 8,000 to 20,000 gallon fixed-roof storage tanks. The storage tanks used by the regional distributor include vertical, horizontal, and underground tanks. Turnover times for storage tanks typically range from two weeks to a little over a month. Although the exact number of distributors and distribution facilities that handle TCE is not known, it is estimated that there are 96 TCE storage tanks and 270 PCE storage tanks owned by distributors.

Emissions from distribution facilities can be categorized as two types: storage and handling. Storage emissions include breathing and working losses from tanks. Handling emissions result from vapor displacement when drums and tanks are filled.

TABLE 19. SUMMARY OF MAJOR TRICHLOROETHYLENE AND PERCHLOROETHYLENE DISTRIBUTORS

Company	Number of Storage Facilities	Number of TCE Storage Tanks	Number of PCE Storage Tanks
Ashland	61	52	37
McKesson	63	6	6
Chem-Central	31	15	10
Detrex	25	10	--
Thompson-Hayward	26	6	--

SOURCE: References 1 and 2.

In References 1 and 2, storage and handling emissions from distribution facilities were estimated using AP-42 emission factors and data supplied by major distributors. An estimated 21 Mg of TCE and 27 Mg of PCE were emitted by uncontrolled storage tanks at distribution facilities nationwide in 1983. Approximately 65,700 Mg of TCE and 162,000 Mg of PCE were sold through distributors in 1983. From these values, uncontrolled storage emission factors are calculated to be 0.3 kg/Mg and 0.2 kg/Mg for TCE and PCE, respectively.

Total handling emissions at distribution facilities in 1983 were estimated at 18 Mg/yr for TCE and 23 Mg/yr for PCE. Using the TCE and PCE distribution estimates above, the uncontrolled emission factors for handling operations are calculated to be 0.3 kg/Mg and 0.1 kg/Mg for TCE and PCE, respectively.

PUBLICLY OWNED TREATMENT WORKS (POTWs)

Trichloroethylene and PCE may be emitted from publicly owned treatment works, depending on the type of waste streams received. The primary source of these emissions is believed to be industrial discharges containing TCE and PCE. A recent study used emissions modeling to estimate compound-specific emission factors for a hypothetical average POTW that treats industrial wastewater.[3] Atmospheric emissions of TCE from the hypothetical POTW were estimated to be 62 percent of the TCE in the POTW influent; atmospheric emissions of PCE were estimated to be 70 percent of the influent PCE.

Characteristics of the hypothetical POTW were based on data obtained in a previous study of 1,600 POTWs nationwide identified as treating industrial discharges. The hypothetical POTW included the four most common major unit operations identified in the database of 1,600 industrial POTWs: 1) aerated grit chamber, 2) primary clarifier, 3) mechanically aerated basin, and 4) chlorine contact chamber. The average flowrate of the 1,600 POTWs was 0.5906 cubic meters per second, so this was the flowrate selected for the hypothetical POTW.

UNIDENTIFIED OR MISCELLANEOUS SOURCES OF TRICHLOROETHYLENE AND PERCHLOROETHYLENE

Trichloroethylene and PCE are used in miscellaneous chemical synthesis and solvent applications. For example, TCE is used as a reactant to produce pesticide intermediates. An estimated 3,670 Mg of TCE were consumed for this purpose by the pesticide industry in 1984.[4] Trichloroethylene may also be used in the chemical synthesis of flame-retardant chemicals; as a solvent in pharmaceutical manufacture; as a solvent in waterless preparation, dying, and finishing operations in the textile industry; and as a carrier solvent in formulated consumer products such as insecticides, fungicides, typewriter correction fluids, paint removers, and paint strippers.[5-8]

The known miscellaneous uses of PCE primarily include solvent applications. The pharmaceutical industry consumed about 7 Mg of PCE solvent in 1985.[7] In textile processing, PCE functions as a scouring solvent, removing oils from fabrics after knitting and weaving operations, and as a carrier solvent for fabric finishes and water repellants, and for sizing and desizing.[9] Perchloroethylene is miscible with other common solvents and is an ingredient in blended solvents. Perchloroethylene is used as a carrier solvent in many products such as printing inks, cleaners, polishes, lubricants, and silicones.[6,9] It is also used as a recyclable dielectric fluid for power transformers, heat transfer medium, and pesticide intermediate.

No specific emission factors were found for TCE and PCE emissions from these miscellaneous uses of TCE and PCE. National emissions of these compounds from pesticide and pharmaceutical manufacture have been reported to be negligible.[4,7] It is assumed that all TCE and PCE used in consumer products is eventually emitted to the atmosphere.

Both TCE and PCE may also be emitted during solid and hazardous waste treatment, storage and disposal. Emissions of TCE and PCE have been reported from hospital waste incineration, waste oil combustion, sewage sludge

incineration, and landfills.[10-13] The quantity of emissions depends on waste type and disposal techniques. The reader is encouraged to investigate specific sites to determine the potential for TCE or PCE emissions from these sources.

REFERENCES FOR SECTION 8

1. U.S. Environmental Protection Agency. Survey of Perchloroethylene Emission Sources. EPA-450/3-85-017. Office of Air Quality Planning and Standards, Research Triangle Park, North Carolina. 1985.

2. U.S. Environmental Protection Agency. Survey of Trichloroethylene Emission Sources. EPA-450/3-85-021. Office of Air Quality Planning and Standards, Research Triangle Park, North Carolina. 1985.

3. White, T. S., Radian Corporation. Volatile Organic Compounds Emissions from Hazardous Waste Treatment Facilities at Downstream POTW (Final Report). Prepared under EPA Contract No. 68-02-4378. U.S. Environmental Protection Agency, Research Triangle Park, North Carolina. 1987.

4. Memorandum from R. Pandullo, and R. Nash, Radian Corporation, to Methylene Chloride File, July 24, 1986. Estimates of Hazardous Compound Emissions from Pesticide Facilities and Emission Reductions Achievable with Additional Controls.

5. Mannsville Chemical Products Corp. Chemical Products Synopsis - Trichloroethylene. Asbury Park, New Jersey. 1987.

6. Maklan, D. M., D. H. Steele, S. K. Dietz, G. L. Brown, and S. Fallah. Household Products Containing Methylene Chloride and Other Chlorinated Solvents: "A Shelf Survey." EPA-OTS 560/5-87-006. U.S. Environmental Protection Agency, Washington, D.C. 1987.

7. Memorandum from R. Pandullo, R. Nash, and P. Murphy, Radian Corporation, to Methylene Chloride File, September 17, 1986. Estimates of Potentially Hazardous Compound Emissions from Pharmaceutical Facilities and Emission Reductions Achievable with Additional Controls.

8. McNeill, W. C., Jr. Trichloroethylene. (In) Encyclopedia of Chemical Technology, 3rd ed., Volume 5. R. E. Kirk, D. F. Othmer, M. Grayson, and D. Eckroth, eds. John Wiley and Sons, New York, New York. 1978. pp. 745-753.

9. Mannsville Chemical Products Corp. Chemical Products Synopsis - Perchloroethylene. Asbury Park, New Jersey. 1987.

10. Pope, A. A., P. A. Cruse, and C. C. Most. Toxic Air Pollutant Emission Factors - A Compilation for Selected Air Toxic Compounds and Sources. EPA-450/2-88-006a. U.S. Environmental Protection Agency, Research Triangle Park, North Carolina. 1988.

11. Harkov, R., S. J. Gianti, J. W. Bozzeli, and J. E. LaRegina. Monitoring Volatile Organic Compounds at Hazardous and Sanitary Landfills in New Jersey. Journal of Environmental Science and Health. A20(5):491-501. 1985.

12. Wood, J. A., and M. L. Porter. Hazardous Pollutants in Class II Landfills. Journal of the Air Pollution Control Association. 37(5):609-615. 1987.

13. Fennelly, P. F., M. McCabe, J. M. Hall, M. F. Kozik, M. P. Hoyt, G. T. Hunt, GCA Corporation. Environmental Characterization of Disposal of Waste Oils by Combustion in Small Commercial Boilers. EPA-600/2-84-150. U.S. Environmental Protection Agency, Cincinnati, Ohio. 1984.

SECTION 9
SOURCE TEST PROCEDURES

Trichloroethylene and perchloroethylene emissions can be measured using EPA Reference Method 18, which was added in the Federal Register on October 18, 1983.[1] This method applies to the analysis of approximately 90 percent of the total gaseous organics emitted from industrial sources.[1]

In Method 18, a sample of the exhaust gas to be analyzed is drawn into a Tedlar® or alumized Mylar® bag as shown in Figure 13. The bag is placed inside a rigid leak proof container and evacuated. The bag is then connected by a Teflon® sampling line to a sample probe (stainless steel, Pyrex® glass, or Teflon®) at the center of the stack. Sample is drawn into the bag by pumping air out of the rigid container.

The sample is then analyzed by gas chromatography (GC) coupled with flame ionization detection (FID). Analysis should be conducted within seven days of sample collection. The GC operator should select the column and GC conditions that provide good resolution and minimum analysis time for the compounds of interest. One recommended column is 3.05 m by 3.2 mm stainless steel, filled with 20 percent SP-2100/0.1 percent Carbowax 1500 on 100/120 Supelcoport®.[1] Zero helium or nitrogen should be used as the carrier gas at a flow rate that optimizes good resolution.

The peak areas corresponding to the retention times of trichloroethylene and perchloroethylene are measured and compared to peak areas for a set of standard gas mixtures to determine the trichloroethylene and perchloroethylene concentrations. The detection range of this method is from about 1 ppm to the upper limit governed by GC detector (FID) saturation or column overloading; however, the upper limit can be extended by diluting the stack gases with an inert gas or by using smaller gas sampling loops.

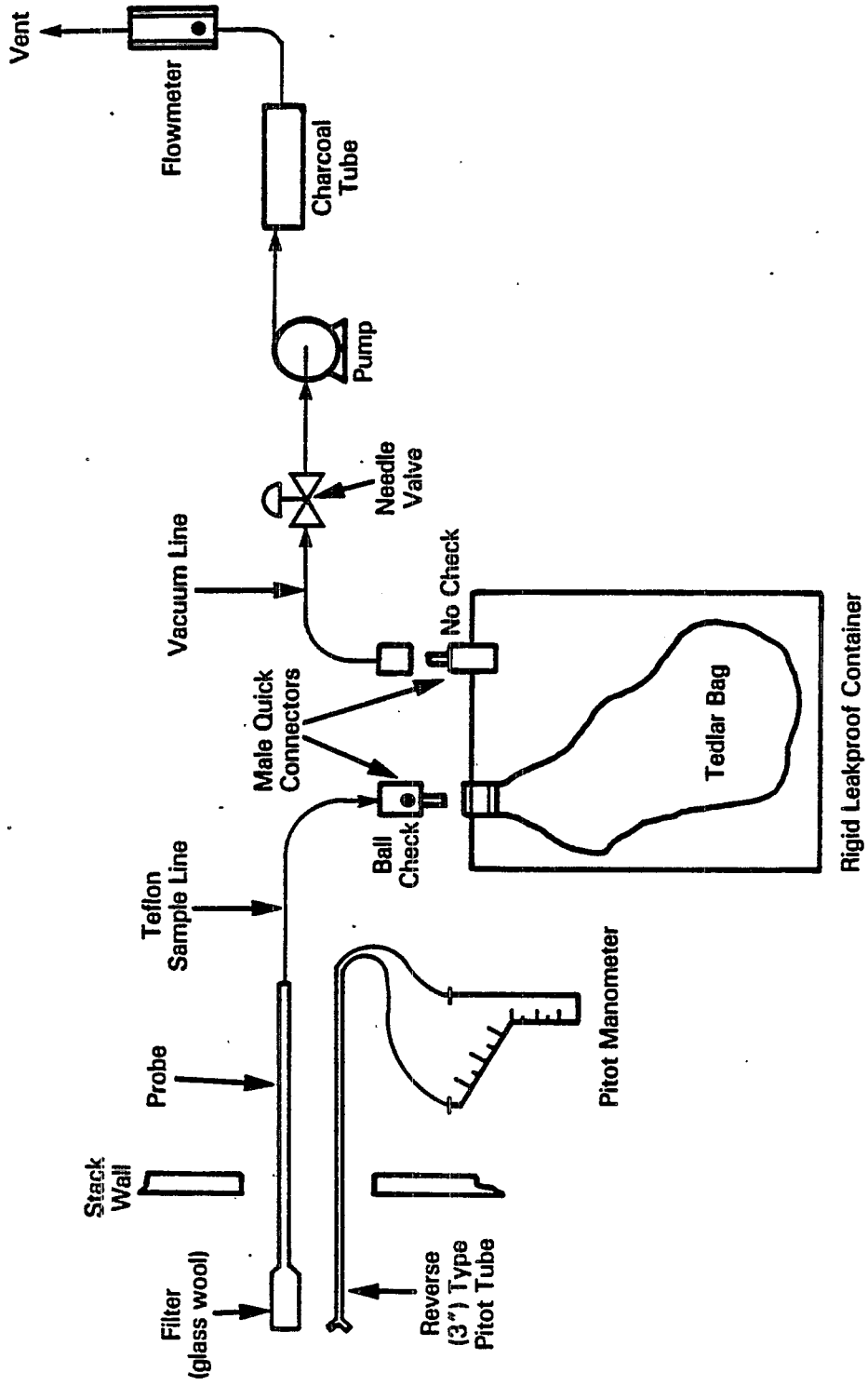

Figure 13. Integrated bag sampling train.

REFERENCES FOR SECTION 9

1. Method 18: Measurement of Gaseous Organic Compound Emissions by Gas Chromatography. Federal Register 48(202):48344-48361. 1983.

APPENDIX A

DERIVATION OF EMISSION FACTORS

APPENDIX A

DERIVATION OF EMISSION FACTORS

A-1. DERIVATION OF CFC-113 PRODUCTION RATE AT ALLIED CHEMICAL FACILITY

(1) - U.S. sales of CFC-113 and CFC-11 = 125 x 10^6 lbs in 1983[1]

- CFC-113 is estimated to account for 95 percent of the sales[1]
- DuPont supplies about 70 percent of the CFC solvent market, with Allied Chemical selling the remaining 30 percent[1]
- Allied Chemical has only one facility that produces CFC-113

(2) - Calculate CFC-113 production in 1983 at the Allied Chemical, Baton Rouge, Louisiana, plant as follows:

$$(125 \times 10^6 \text{ lbs})\ (0.95)\ (0.30)\ \left(\frac{\text{Mg}}{2205 \text{ lb}}\right) = 16{,}000 \text{ Mg CFC-113}$$

A-2. EXAMPLE CALCULATION: RELATIVE SOLVENT USAGE AND EMISSION FACTORS FOR CONTROLLED VS. UNCONTROLLED CLEANERS

o The controlled and uncontrolled emission factors are related as follows:

$$e_c = \frac{e_u\ (1 - n)}{(1 - e_u\ n)} \qquad \text{(Equation 1)}$$

where,

e_c = controlled emission factor (kg emitted per kg fresh solvent feed)

e_u = uncontrolled emission factor (kg emitted per kg fresh solvent feed)

n = efficiency of control device

- The relative amount of fresh solvent used by a controlled cleaner relative to the amount used by an uncontrolled cleaner is:

$$r = \frac{1 - e_u}{1 - e_c} = \text{relative solvent usage factor} \qquad \text{(Equation 2)}$$

Example Case: Open Top Vapor Degreaser (OTVD)

- Consider a situation where a cleaning job requires 1 kg/hr of fresh solvent in the uncontrolled situation. The uncontrolled emission factor (with recycle) for OTVD using PCE is 0.93 kg emitted per kg fresh solvent used.

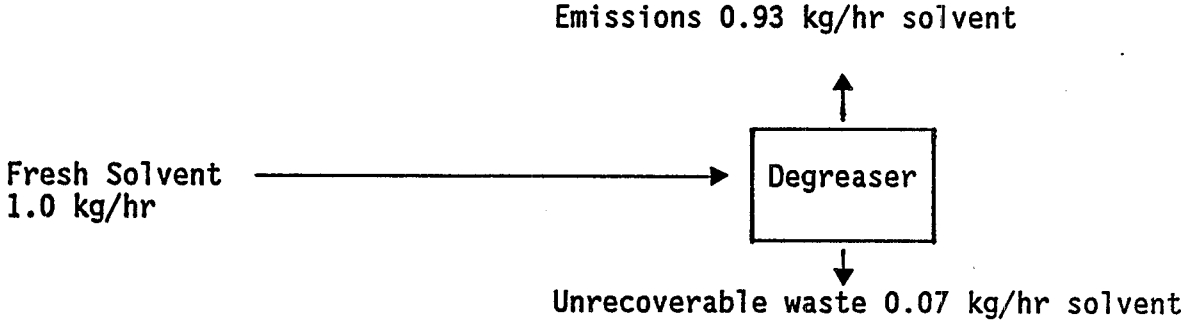

- Now assume controls are applied (refrigerated freeboard chiller) at a control efficiency of 40 percent. Emissions are reduced by 40 percent but the amount of unrecoverable waste solvent does not change.

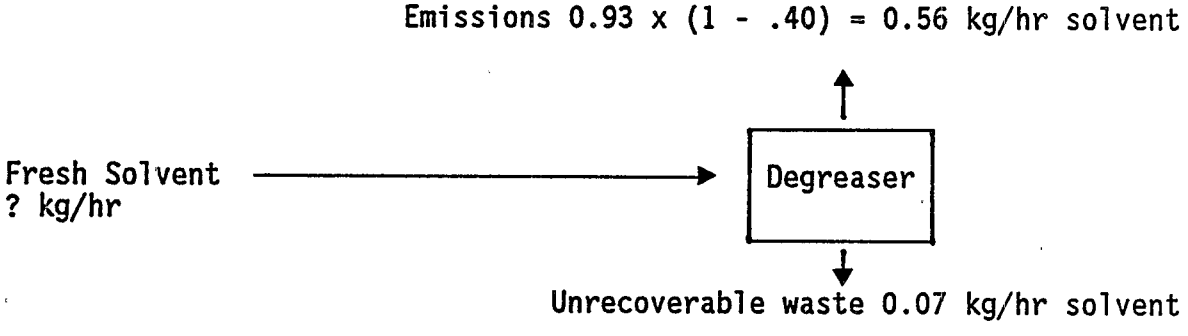

New solvent usage = 0.56 + 0.07 = 0.63 kg/hr

New emission factor (e_c), fresh solvent basis = 0.56/0.63 = 0.89 kg/kg

Relative solvent usage, controlled vs. uncontrolled (r) = 0.63/1.0 = 0.63

Check Equations 1 and 2:

$$e_c = \frac{0.93\ (1 - .40)}{(1 - 0.93 \times 0.40)} = 0.89 \text{ kg/kg, which checks with the example calculation}$$

$$r = \frac{1 - 0.93}{1 - 0.89} = 0.63, \text{ which checks with the example calculation}$$

A-3. DERIVATION OF EQUIPMENT LEAK EMISSION FACTORS AS A FUNCTION OF PRODUCTION CAPACITY FOR SELECTED PRODUCTION PROCESSES

The fugitive emission rate is generally independent of plant capacity. Therefore, Sections 4, 5, and 6 of this document present equipment leak emissions as a function of time (Mg/yr) rather than capacity (kg/Mg). In some cases, however, the reader may find it necessary to use equipment leak emission factors expressed as a function of capacity. These can be calculated based on the estimated annual emission rate and the estimated total production capacity. Table A-1 presents TCE and PCE emission factors (in kg/Mg) for TCE, PCE, and CFC-113 production processes. A sample calculation is shown below for TCE production by ethylene dichloride chlorination:

Estimated TCE production capacity at one plant in 1983: 54,000 Mg/yr[4]

Estimated TCE equipment leak emissions from plant in 1983 (control status is considered confidential) = 24.1 Mg/yr[3]

Calculate equipment leak emission factor as follows:

$$\frac{(24.1 \text{ Mg/yr})\ (1000 \text{ kg/Mg})}{(54{,}000 \text{ Mg/yr})} = 0.45 \text{ kg TCE emitted/Mg TCE production capacity}$$

TABLE A-1. TRICHLOROETHYLENE AND PERCHLOROETHYLENE EMISSION FACTORS FOR EQUIPMENT LEAKS FROM SELECTED PRODUCTION PROCESSES[a]

Production Process	Trichloroethylene		Perchloroethylene	
	Control Technique	Emission Factor (kg/Mg)	Control Technique	Emission Factor (kg/Mg)
TCE Production				
Ethylene Dichloride Chlorination	*	0.45[b]	None	0.10[b]
TCE and PCE Production				
Ethylene Dichloride Oxychlorination	None	0.18[c]	None	0.13[d]
PCE Production				
Ethylene Dichloride Chlorination	—	—	None	1.7[e,f]
Hydrocarbon Chlorinolysis	—	—	Uncertain[g]	0.8[e,g]
Chlorofluorocarbon 113 Production	—	—	None	0.49[h]
			Monthly LDAR on valves and pump seals; vent compressor degassing reservoir to combustion device; rupture discs on relief devices; closed-purge sampling; cap open-ended lines	0.23[h]

[a]References 1-5.

[b]Kilogram of trichloroethylene or perchloroethylene emitted per megagram of trichloroethylene production capacity. Based on data from one plant only.

[c]Kilogram of trichloroethylene emitted per megagram of TCE and PCE production capacity. Based on data from one plant only.

[d]Kilogram of perchloroethylene emitted per megagram of TCE and PCE production capacity. Based on data from one plant only.

[e]Kilograms of PCE emitted per megagram of PCE production capacity.

[f]Represents average of emission factors calculated for two facilities.

[g]Emission factor represents average of emission factors calculated for five facilities. At three facilities, no fugitive emission controls were used. The other two facilities considered fugitive emission control information to be confidential.

[h]Kilogram of PCE per megagram of CFC-113 produced. Based on data from one plant only.

*The company considered this to be confidential information.

REFERENCES FOR APPENDIX A

1. Mannsville Chemical Products Corp. Chemical Products Synopsis - Fluorocarbon Solvents. Cortland, New York. 1984.

2. U.S. Environmental Protection Agency. Survey of Perchloroethylene Emission Sources. EPA-450/3-85-017. Office of Air Quality Planning and Standards, Research Triangle Park, North Carolina. 1985.

3. U.S. Environmental Protection Agency. Survey of Trichloroethylene Emission Sources. EPA-450/3-85-021. Office of Air Quality Planning and Standards, Research Triangle Park, North Carolina. 1985.

4. SRI International. 1983 Directory of Chemical Producers. Menlo Park, California. 1983.

5. Memorandum from K. Fidler and L. Kinkaid, Radian Corporation, to Carbon Tetrachloride File, May 14, 1986. Estimates of Carbon Tetrachloride, Chloroform, and Perchloroethylene Emissions from Chlorofluorocarbon Production Facilities and Emission Reductions Achievable with Additional Control.

TECHNICAL REPORT DATA
(Please read Instructions on the reverse before completing)

1. REPORT NO.	2.	3. RECIPIENT'S ACCESSION NO.
EPA-450/2-89-013		

4. TITLE AND SUBTITLE
Locating And Estimating Air Emissions From Sources of Perchloroethylene And Trichloroethylene

5. REPORT DATE
August 1989

6. PERFORMING ORGANIZATION CODE

7. AUTHOR(S)
Claire C. Most

8. PERFORMING ORGANIZATION REPORT NO.

9. PERFORMING ORGANIZATION NAME AND ADDRESS
Radian Corporation
Post Office Box 13000
Research Triangle Park, NC 27709

10. PROGRAM ELEMENT NO.

11. CONTRACT/GRANT NO.
68-02-4392

12. SPONSORING AGENCY NAME AND ADDRESS
Air Quality Management Division
OAR, OAQPS, AQMD, PCS (MD-15)
Noncriteria Pollutant Programs Branch (MD-15)
Research Triangle Park, NC 27711

13. TYPE OF REPORT AND PERIOD COVERED
Final

14. SPONSORING AGENCY CODE

15. SUPPLEMENTARY NOTES
EPA Project Officer: Anne A. Pope

16. ABSTRACT
To assist groups interested in inventorying air emissions of various potentially toxic substances, EPA is preparing a series of documents such as this to compile available information on sources and emissions of these substances. This document deals specifically with perchloroethylene and trichloroethylene. Its intended audience includes Federal, State, and local air pollution personnel and others in locating potential emitters of perchloroethylene and trichloroethylene and in making gross estimates of air emissions therefrom.

This document presents information on (1) the types of sources that may emit perchloroethylene and trichloroethylene, (2) process variations and release points that may be expected within these sources and (3) available emissions information indicating the potential for trichloroethylene and perchloroethylene releases into the air from each operation.

17. KEY WORDS AND DOCUMENT ANALYSIS

a. DESCRIPTORS	b. IDENTIFIERS/OPEN ENDED TERMS	c. COSATI Field/Group
Perchloroethylene Trichloroethylene Air Emission Sources Locating Air Emission Sources Toxic Substances		

18. DISTRIBUTION STATEMENT	19. SECURITY CLASS *(This Report)*	21. NO. OF PAGES
Unlimited	Unclassified	124
	20. SECURITY CLASS *(This page)*	22. PRICE
	Unclassified	