EPA-450/3-78-017

HYDROCARBON CONTROL STRATEGIES FOR GASOLINE MARKETING OPERATIONS

by

R.L. Norton, R.R. Sakaida,
and M.M. Yamada

Contract No. 68-02-2606
EPA Project No. 13

EPA Project Officer: Charles F. Kleeberg

Prepared for

U.S. ENVIRONMENTAL PROTECTION AGENCY
Office of Air and Waste Management
Office of Air Quality Planning and Standards
Research Triangle Park, North Carolina 27711

April 1978

This report is issued by the Environmental Protection Agency to report technical data of interest to a limited number of readers. Copies are available free of charge to Federal employees, current contractors and grantees, and nonprofit organizations - in limited quantities - from the Library Services Office (MD-35), U.S. Environmental Protection Agency, Research Triangle Park, North Carolina 27711; or, for a fee, from the National Technical Information Service, 5285 Port Royal Road, Springfield, Virginia 22161.

This report was furnished to the Environmental Protection Agency by Pacific Environmental Services, Inc., 1930 14th Street, Santa Monica, California 90404, in fulfillment of Contract No. 68-02-2606. The contents of this report are reproduced herein as received from Pacific Environmental Services, Inc. The opinions, findings, and conclusions expressed are those of the author and not necessarily those of the Environmental Protection Agency. Mention of company or product names is not to be considered as an endorsement by the Environmental Protection Agency.

Publication No. EPA-450/3-78-017

PREFACE

The Clean Air Act Amendments of 1977 (Public Law 95-95) require the Environmental Protection Agency to make available to appropriate federal agencies, states, and air pollution control agencies, information regarding processes, procedures, and methods to reduce or control vapor emissions from fuel transfer and storage operations [Section 108(f)(1)(A)(ii)]. This report is an informational document on gasoline marketing operations and the evaluation of applicable hydrocarbon emission control strategies. The primary intent is to provide basic and current information to those who have little knowledge of the subject area. A bibliography, which should be consulted for supplementary information, is included.

ABSTRACT

This informational document provides basic and current descriptions of gasoline marketing operations and methods that are available to control hydrocarbon emissions from these operations. The three types of facilities that are described are terminals, bulk plants, and service stations. Operational and business trends are also discussed. Emissions from typical facilities, including transport trucks, are estimated.

The operations which lead to emissions from these facilities include (1) gasoline storage, (2) gasoline loading at terminal and bulk plants, (3) gasoline delivery to bulk plants and service stations, and (4) the refueling of vehicles at service stations.

Available and possible methods for controlling emissions are described with their estimated control efficiencies and costs. The costs for control of a unit weight of hydrocarbon are calculated from these estimates.

This report also includes a bibliography of references cited in the text, and supplementary sources of information.

TABLE OF CONTENTS

Section		Page
1.0	SUMMARY	1-1
1.1	Emissions Estimates	1-1
1.2	Control Technology	1-1
1.2.1	Terminals	1-2
1.2.2	Bulk Plants	1-2
1.2.3	Service Stations	1-2
1.2.4	Delivery Trucks	1-2
1.3	Cost-Effectiveness	1-3
2.0	GASOLINE MARKETING OPERATIONS	2-1
2.1	Description	2-1
2.1.1	Terminals	2-1
2.1.2	Bulk Plants	2-6
2.1.3	Service Stations	2-6
2.2	Potential Emission Sources	2-9
2.2.1	Gasoline Storage	2-9
2.2.2	Gasoline Transfer	2-10
2.2.3	Gasoline Transport	2-12
2.3	Potential Emissions From Typical Facilities	2-12
2.3.1	Terminals	2-13
2.3.2	Bulk Plants	2-17
2.3.3	Service Stations	2-17
2.3.4	Trucks in Transit	2-17
2.4	Market Trends	2-20
2.4.1	Terminals	2-20
2.4.2	Bulk Plants	2-21
2.4.3	Service Stations	2-22
	References	2-26
3.0	HYDROCARBON EMISSION CONTROL STRATEGIES	3-1
3.1	Terminals	3-1
3.1.1	Storage Control Strategies	3-1

Section | Page

3.1.2 Outgoing Transfer 3-6

3.2 Bulk Plants 3-12

3.2.1 Control Strategies for Incoming Transfer .. 3-12
3.2.2 Control Strategies for Storage Tanks 3-15
3.2.3 Control Strategies for Outgoing Transfers.. 3-16

3.3 Service Stations 3-19

3.3.1 Delivery of Gasoline to the Service Station 3-21
3.3.2 Automobile Refueling 3-22

3.4 Delivery Trucks 3-30

References 3-31

4.0 REVIEW OF CONTROL STRATEGIES AT TERMINALS 4-1

4.1 Safety Requirements 4-1
4.2 Efficiencies..... 4-2
4.3 Costs..... 4-5

4.3.1 Capital Costs 4-5
4.3.2 Annualized Costs and Cost-Effectiveness.. 4-7

4.4 Energy and Environmental Impacts 4-7

References 4-11

5.0 REVIEW OF CONTROL STRATEGIES AT BULK PLANTS 5-1

5.1 Safety Requirements 5-1
5.2 Efficiencies..... 5-1

5.2.1 Submerged Fill 5-1
5.2.2 Vapor Balance System 5-1

5.3 Costs 5-2

5.3.1 Capital Costs 5-2
5.3.2 Operation Maintenance Costs 5-5
5.3.3 Sources and Variability of Cost Data for Vapor Balance Systems 5-6
5.3.4 Annualized Costs and Cost-Effectiveness .. 5-6

5.4 Energy and Environmental Impacts 5-6

References 5-9

Section | Page

6.0 REVIEW OF CONTROL STRATEGIES AT SERVICE STATIONS 6-1

6.1 Safety Requirements 6-1
6.2 Efficiencies 6-2

6.2.1 Stage I 6-2
6.2.2 Stage II 6-3

6.3 Costs 6-4

6.3.1 Capital Costs 6-4
6.3.2 Operating and Maintenance Costs 6-7
6.3.3 Annualized Costs and Cost-Effectiveness . 6-7

6.4 Energy and Environmental Impacts 6-10

References..... 6-15

7.0 ASSESSMENT OF CONTROL STRATEGIES FOR GASOLINE DELIVERY TRUCKS 7-1

7.1 Safety Requirements 7-1
7.2 Efficiency 7-1
7.3 Costs 7-1

7.3.1 Capital Costs 7-1
7.3.2 Cost-Effectiveness 7-2

7.4 Impacts - Conservation of Gasoline 7-2

References 7-4

8.0 BIBLIOGRAPHY 8-1

LIST OF TABLES

Table		Page
2-1	Demand and Sales of Gasoline	2-3
2-2	Number of Facilities	2-4
2-3	Bottom Loading at Terminals	2-5
2-4	Types of Service Stations	2-8
2-5	Total National Hydrocarbon Emissions, 1975	2-14
2-6	Emissions From Gasoline Marketing Operations	2-15
2-7	Potential Emissions From Gasoline Terminals	2-16
2-8	Potential Emissions From Bulk Plants	2-18
2-9	Potential Hydrocarbon Emissions From Service Stations	2-19
2-10	Service Station Trends	2-23
2-11	New and Deactivated Service Stations	2-24
2-12	Duration of Self-Service Operations by Lundberg Survey Respondents	2-24
4-1	Summary of Storage Tank Costs	4-5
4-2	Cost of Retrofitting an Existing Fixed-Roof Tank With an Internal Floating Roof	4-5
4-3	Costs of Vapor Control Systems for Existing Terminals	4-8
4-4	Annualized Control Cost Estimates for Model Existing Terminals	4-9
5-1	Overview of Installed Capital Costs for Vapor Balance Systems for Bulk Plants	5-3
5-2	Estimates of Annualized Costs and Cost-Effectiveness for a Typical Bulk Plant	5-7
6-1	Cost Summary for Vapor Balance Systems	6-5
6-2	Cost Summary for Vacuum-Assist Systems	6-6
6-3	Cost Summary for Hybrid Systems	6-8
6-4	Average Capital Costs for Vapor Recovery Systems	6-9
6-5	Estimates of Annual O&M Costs for Vapor Recovery Systems	6-9
6-6	Annualized Cost Estimates and Cost-Effectiveness for Service Stations Using Balance System	6-11
6-7	Annualized Cost Estimates and Cost-Effectiveness for Service Stations Using Vacuum-Assist System	6-12
6-8	Annualized Cost Estimates and Cost-Effectiveness for Service Stations Using Hybrid Systems	6-13
7-1	Estimated Hydrocarbon Savings and Losses From Tank Truck Transit Under Controlled Conditions	7-3

LIST OF ILLUSTRATIONS

Figure		Page
2-1	Gasoline Marketing Operations and Emission Sources	2-2
3-1	Floating Roof Sealing Mechanism	3-4
3-2	Lifter Roof Tank With Liquid Seal	3-5
3-3	Flexible Diaphragm Tank	3-5
3-4	Top-Loading Arm	3-7
3-5	Compression-Refrigeration-Absorption (CRA) System	3-10
3-6	Compression-Refrigeration-Condensation (CRC) System	3-11
3-7	Refrigeration System	3-13
3-8	Top-Loading Vapor Recovery Arm	3-18
3-9	Top-Loading Vapor Recovery System	3-20
3-10	Vapor Balance Systems	3-23
3-11	Balance System Vapor Recovery Nozzle	3-25
3-12	Direct Incineration System	3-27
3-13	Aspirator-Assist System	3-29

1.0 SUMMARY

This report provides a source of information for those interested in gasoline marketing operations and the control of hydrocarbon emissions therefrom. Marketing operations considered in this document include those at gasoline terminals, bulk plants, and service stations, and the truck deliveries between these facilities. This report describes these facilities and operations, with respect to their position in the marketing chain, size, and operational and marketing trends.

1.1 EMISSIONS ESTIMATES

Estimates of typical annual hydrocarbon emissions from gasoline marketing operations are: terminals, 690,000 tons; bulk plants, 200,000 tons; service stations, 530,000 tons; and truck transportation, 30,000 tons. These emissions account for almost 5 percent of the total national hydrocarbon emission estimates.

1.2 CONTROL TECHNOLOGY

Control technologies applicable to the different marketing operations, particularly service stations, are continually being tested and improved. Emission factors which have been accepted and utilized for years have come under investigation and are currently being updated. The most rapid changes are occurring with respect to Stage II controls at service stations. These controls are utilized to minimize emissions of gasoline vapors during automobile refueling. Although attempts have been made to utilize the most current information available, costs, control efficiencies, and practical applicability of Stage II systems are subject to change during the course of publication of this report. Applicable emission control

techniques are discussed in detail for each of the different marketing operations. Safety requirements, control efficiencies, and costs are provided for the systems discussed.

1.2.1 TERMINALS

Floating roof tanks and vapor recovery units, in conjunction with a vapor collection system from loading racks and fixed-roof tanks, are favored control techniques used at terminals. These and other available control techniques are being constantly improved and can provide 90 percent control of emissions.

1.2.2 BULK PLANTS

Of the alternative control technologies available, the vapor balance system and the submerged fill of tanks and trucks are used almost exclusively for emissions control at bulk plants. Over 90 percent control of emissions from transfer operations is possible.

1.2.3 SERVICE STATIONS

Submerged fill of the storage tanks and a balance system are the predominant control technology used in the delivery of gasoline to service stations. The control efficiency is 95 percent or more. Several systems are currently available for automobile refueling (Stage II). These include the vapor balance, vacuum assist, and the hybrid systems. The vapor balance system can attain greater than 90 percent control efficiency if a good seal is provided at the nozzle/fillneck interface. The other two systems have attained control efficiencies above 95 percent.

1.2.4 DELIVERY TRUCKS

Preventing loss while the truck is in transit is primarily a maintenance problem of reducing leaks. Standards can be set to establish a maximum leak rate at the operating pressure-vacuum

vent setting. Reduction of leaks is also required for best performance with the vapor balance systems.

1.3 COST-EFFECTIVENESS

Cost-effectiveness analyses were performed for each of the gasoline marketing operations. These analyses in dollars expended per unit weight of emissions controlled are presented in the review sections for each of the marketing operations.

2.0 GASOLINE MARKETING OPERATIONS

2.1 DESCRIPTION

Gasoline, after being manufactured at a petroleum refinery, is distributed from the refinery to a terminal primarily via pipeline or marine vessel. At the terminal, the gasoline is stored, transferred to trucks or in some instances to railcars, and subsequently delivered to intermediate wholesale outlets (bulk plants) and to large retail (service stations) and commercial accounts. Bulk plants generally deliver to accounts with storage tank capacities of less than 30,000 liters (8,000 gal).

This document describes gasoline marketing operations from storage at the terminal to the refueling of vehicles at service stations. A diagram showing the flow of gasoline for the marketing operations discussed and potential sources of hydrocarbon emissions is given in Figure 2-1. As noted in Figure 2-1, the three major facilities in this marketing chain are the terminal, bulk plant, and service station.

Since 1972, which is the date of the last census of business data, total gasoline demand in the United States has risen above the 100-billion gallon mark. Gasoline sales at service stations peaked in 1973 at 77.2 billion gallons but have subsequently remained below this peak, as shown in Table 2-1. However, the total dollar sales of gasoline at service stations have continued to rise steadily and reached $48.0 billion in 1976. These sales were estimated to be $52.8 billion in 1977.[1,2]

2.1.1 TERMINALS

As of the last Bureau of the Census data in 1972 (refer to Table 2-2) there were 1,925 terminals which are the primary wholesale outlets for gasoline marketing. Gasoline is delivered from

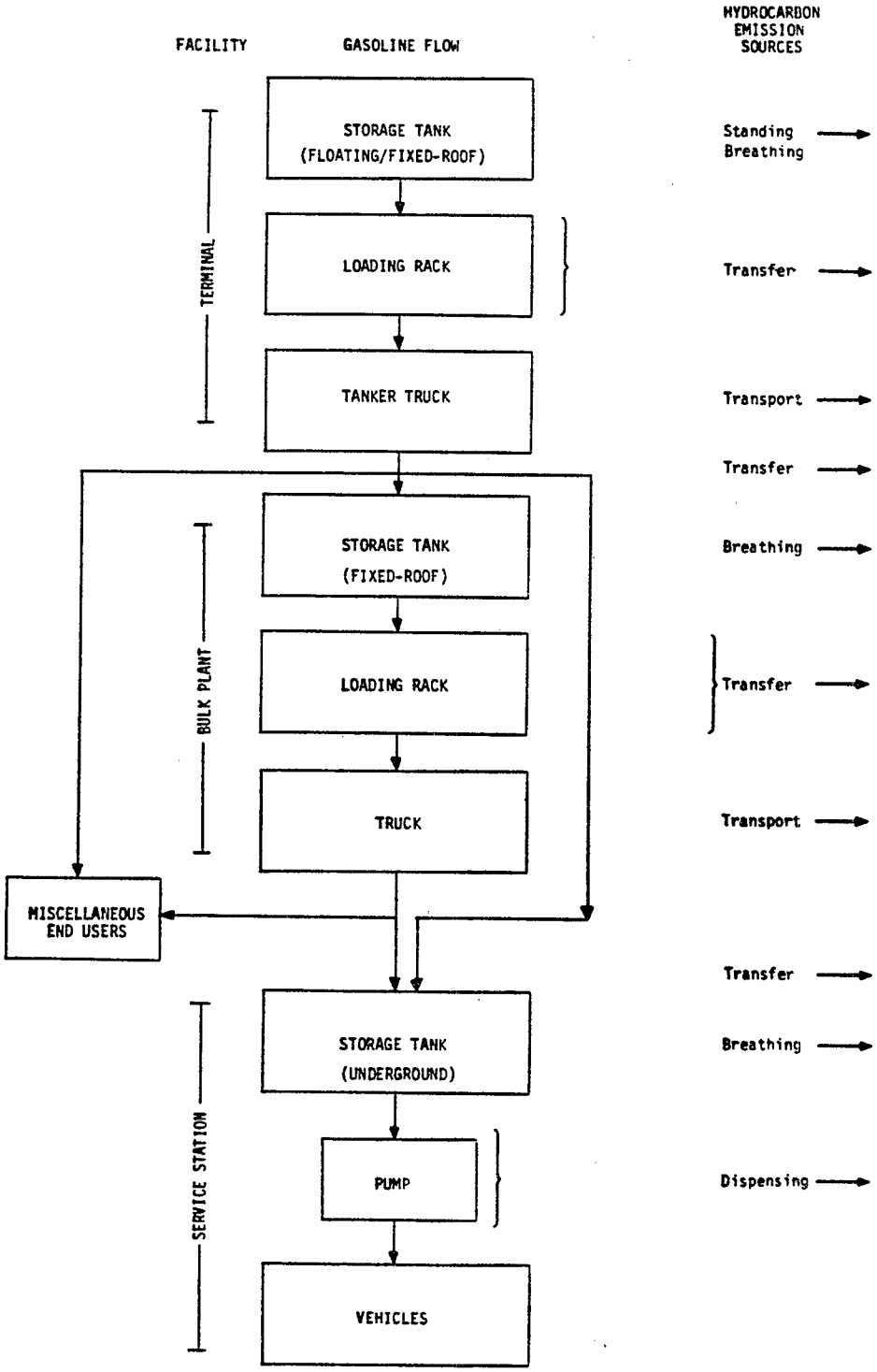

Figure 2-1. Gasoline Marketing Operations and Emission Sources

Table 2-1. DEMAND AND SALES OF GASOLINE[a]

Year	Total Domestic Demand $x10^9$ liters	Total Domestic Demand $x10^9$ gal	Service Station Sales[b] $x10^9$ liters	Service Station Sales[b] $x10^9$ gal
1967	293	77.4	207	54.8
1968	311	82.2	220	58.1
1969	325	85.8	235	62.0
1970	339	89.5	247	65.3
1971	352	92.9	260	68.8
1972	374	98.7	276	72.9
1973	390	103.0	292	77.2
1974	379	100.2	279	73.8
1974	387	102.3	288	76.0
1976	405	106.9	278	73.4
1977	415	109.6[c]	283	74.7

[a] National Petroleum News (NPN), Factbook Issue, Mid-May 1977.

[b] Service stations are retail outlets with over 50 percent of their volume from sales and service of petroleum products (Bureau of Census, NPN).

[c] Arthur D. Little, Inc., The Economic Impact of Vapor-Recovery Regulations on the Service Station Industry, Table 20 (for U.S. Department of Labor, OSHA), Cambridge, Mass., March 1978.

Such vapor losses which occur under storage conditions are generally termed breathing losses. Other variables which affect breathing or standing losses for fixed-roof tanks include the amount and volatility of the gasoline stored and the type and condition of tanks and appendages.[14,15]

2.2.1.2 Floating Roof Tank

Standing losses can also occur from floating roof tanks in which the tank roof floats on the surface of the gasoline. Breathing losses as associated with fixed-roof tanks are negligible since the vapor space is held to a minimum. However, some vapors can exist in the annulus between the floating roof and the wall, and certain wind conditions can force air past the seals and into the space with a resultant loss of vapor. Normally, wicking of the liquid past the edge of the seals and subsequent evaporation results in the hydrocarbon losses. In both instances wind velocity is the primary variable affecting hydrocarbon emissions.[15-18]

2.2.1.3 Variable Vapor Space Tank

Standing and breathing losses are effectively reduced with a properly operating, nonleaking, variable space tank. Thus, this type of tank has not been considered as a source of storage emissions and is effective in reducing breathing losses when throughputs are low.[19]

2.2.2 GASOLINE TRANSFER

Gasoline transfer, if uncontrolled, will result in hydrocarbon emissions by several mechanisms. Normally considered as working losses, these losses result from the filling and emptying of fixed-volume tanks and withdrawal from floating roof tanks.

2.2.2.1 Fixed-Volume Tanks

2.2.2.1.1 Fixed-Roof Tanks

Working losses from fixed-roof tanks are a consequence of filling and emptying operations. As the tank is filled, the volume of vapor displaced by the liquid is expelled from the tank. When liquid is removed from the tank, fresh air is drawn in. Unless the vapor space is saturated with vapors from the gasoline, the gasoline will evaporate. Thus, after liquid withdrawal, gasoline evaporates, the pressure in the vapor space increases, and air-vapor mixture is expelled.

2.2.2.1.2 Tank Trucks

Excluding spillage, the two major sources of gasoline vapor loss during the filling of a tank truck are (1) venting the volume of gases -- air and hydrocarbons -- displaced by the entering liquid to the atmosphere, and (2) filling in a manner which increases turbulence -- splash loading. Splash loading not only enhances saturation of the air space with vapor but results in droplet and mist formation. Entrainment of the droplets/mist in the exhaust results in emissions which can significantly exceed that from discharging gasoline into the tank compartment below the surface of the liquid in the tank -- submerged loading.

For tank trucks, as for other fixed-volume tanks, no actual emissions occur during tank emptying. However, as gasoline is withdrawn, fresh air enters the vapor space through the vent. Subsequently, a net evaporation of gasoline will take place until the concentration of hydrocarbons in the vapor space approaches an equilibrium value. Since the pressure in the vapor space will increase during this process, some vapor may be vented to the atmosphere. A detailed discussion of effects of tank operations on the standard working loss equation is presented in API Bulletin 2518.[14]

2.2.2.1.3 Vehicle Fuel Tanks

Vapors are displaced from vehicle tanks during refueling just as they are displaced in splash loading of a tank truck. Evaporation of gasoline which has been spilled or spit back during filling is also a major source of hydrocarbons.

2.2.2.2 Floating Roof Tanks

Working emissions from floating roof tanks are generally limited to emptying of the tank and are insignificant. As the roof is lowered, the gasoline wetting the wall can evaporate when exposed.

2.2.3 GASOLINE TRANSPORT

Losses occurring during the transport of gasoline (breathing) by truck have previously been assumed to be negligible because of the relatively short travel time involved; 2 days or less. However, loss estimates from trucks during transport were recently presented at a California Air Resources Board Public Hearing and can be significant.[20] These hydrocarbon losses during the transport of gasoline in delivery tanks are caused by leaking delivery tanks, pressure in the tank, and thermal effects on the vapor and on the liquid.

A worst-case situation arises if a poorly sealed tank has been loaded with gasoline and pure air has been trapped in the ullage space. Gasoline will then evaporate until the trapped air becomes saturated. During this vaporization process, pressure increases and venting occurs.

2.3 POTENTIAL EMISSIONS FROM TYPICAL FACILITIES

Hydrocarbon emissions from gasoline marketing sources represent a significant amount of the total ambient hydrocarbon burden.

As presented in Table 2-5, gasoline marketing emissions represented 4.6 percent of the total hydrocarbon emissions in 1975.

Gasoline vapor emissions from the three marketing operations and from truck deliveries are given in Table 2-6. These estimated annual gasoline losses were obtained from unpublished EPA information and from emissions estimated for typical facilities and annual gasoline throughput. For terminals, the total 1976 domestic gasoline demand was taken as the throughput, and for service stations, 1977 sales were used. An estimate of 20,000 bulk plants operating 260 days per year with an average throughput of 19,000 liters (5,000 gal) of gasoline per day was used to calculate bulk plant losses. For the tanker trucks, the volume of gasoline transported from the terminals to the bulk plants and service stations and estimated volumes transported from the bulk plants to service stations were used.

2.3.1 TERMINALS

A typical terminal was assumed to have a throughput of 950,000 liters (250,000 gal) per day and three storage tanks of 7.95×10^6 liters (50,000 bbl) capacity, each with dimensions of 27 m (90 ft) diameter and 15 m (48 ft) height.

Using emission factors from AP-42[21] for a medium vapor pressure gasoline (RVP 10), potential hydrocarbon emissions were calculated for several storage and transfer operations which could be present at a typical terminal. Both emission factors and hydrocarbon losses are given in Table 2-7.

Tanker loading losses were computed for submerged and splash loading and resulted in average losses of 570 kg/day and 1,330 kg/day, respectively. These values assume normal dedicated service.

Table 2-5. TOTAL NATIONAL HYDROCARBON EMISSIONS, 1975[a]

Source	Hydrocarbon Emissions	
	10^6 tons/yr	Percent
Transportation	11.7	38.1
Organic solvents	8.3	27.0
Open burning	1.0	3.3
Industrial processes	3.5	11.4
Petroleum refining and handling[b]	2.5	8.1
Gasoline marketing	1.4	4.6
Fuel combustion	1.4	4.6
Miscellaneous	0.9	2.9
	30.7	100

[a] Sources: Office of Air Quality Planning and Standards, EPA Report No. 450/2-76-028; and Hopper, T.G., October 1975 (see bibliography under "General Information").

[b] Petroleum handling other than gasoline.

Table 2-6. EMISSIONS FROM GASOLINE MARKETING OPERATIONS

Operation	Hydrocarbon Emissions[a]	
	10^3 tons/yr	Percent
Terminals	690	47.6
Bulk plants	200	13.8
Service stations	530	36.5
Trucks	30	2.1
	1,450	100

[a] Estimated typical emissions

Table 2-7. POTENTIAL EMISSIONS FROM GASOLINE TERMINALS[a,b]

	Emission Factors[c]		Hydrocarbon Losses[d]			
	$kg/10^3$ liter	$lb/10^3$ gal	kg/day	lb/day	gal/day	kg/yr ($x\ 10^3$)
Fixed-roof breathing losses						
New tank/good white paint	0.028	0.23	670	1,450	280	244
Old tank/poor white paint	0.031	0.26	740	1,630	320	269
Fixed-roof working loss	0.99	8.2	940	2,050	400	269
Floating roof standing loss						
New welded tank/tight seals	0.0040	0.033	95	210	41	35
Old riveted tank/loose seals	0.0094	0.078	220	490	96	80
Floating roof withdrawal loss	0.0028	0.023	2.7	5.8	1	<1
Tanker loading						
Splash	1.4	12.0	1,330	3,000	590	380
Submerged	0.6	5.0	570	1,250	245	163

[a] Typical terminal with 950,000 liters (250,000 gal) per day throughput, with three storage tanks with a total capacity of 23.8×10^6 liters (150,000 bbl). Storage tank turnover of less than 30 times a year.

[b] Emission factors from U.S. EPA, Supplement No. 7 for Compilation of Air Pollutant Emission Factors, April 1977.

[c] Breathing and standing factors are per day; others are for volume transferred.

[d] Working losses are for 286 days per year; standing losses 364 days per year.

2.3.2 BULK PLANTS

A typical bulk plant for this study was assumed to have a throughput of 19,000 liters (5,000 gal) per day and three above-ground fixed-roof, storage tanks with dimensions of 3.2 m (10.5 ft) diameter and 8.0 m (26 ft) height.[8]

Emission factors obtained from the U.S. EPA control techniques guideline series[22] were used to compute potential emissions from a typical bulk plant. Emission values tabulated in Table 2-8 indicate that storage tank losses can amount to 39 kg/day and truck loading losses can be about 11 kg/day or 27 kg/day depending on whether the trucks are submerged or splash loaded.

2.3.3 SERVICE STATIONS

A typical service station was assumed to have three underground tanks of 38,000 liters (10,000 gal) capacity each. A typical throughput of 147,500 liters (39,000 gal) per month was assumed. This corresponds to an average throughput for service stations as determined by ADL.[13]

Using emission factors from AP-42, Supplement No. 7,[21] potential hydrocarbon emissions for service stations were calculated as shown in Table 2-9. Vehicle refueling and underground tank filling are the major sources of hydrocarbon emissions.

2.3.4 TRUCKS IN TRANSIT

Because transports and small delivery trucks can have the same number of hatches and delivery ports from which vapors could escape, no distinction will be made between the two when estimating the potential emissions.

Using CARB estimates,[20] a truck will emit approximately 2.1 kg (4.57 lb) of hydrocarbon per trip at a leak rate of 4 inches of

Table 2-8. POTENTIAL EMISSIONS FROM BULK PLANTS[a,b]

	Hydrocarbon Losses[c]			
	kg/day	lb/day	gal/day	kg/yr
Storage tank losses				
Breathing (3 kg/day per tank[b])	9	19.8	3.9	2,570
Working (1.6 kg/10^3l)	30	66.0	12.9	8,580
Balanced, in and out (0.23 kg/10^3l)	4.4	9.6	1.9	1,260
Truck loading				
Splash (1.4 kg/10^3l)	26.6	58.5	11.5	7,610
Submerged (0.6 kg/10^3l)	11.4	25.1	4.9	3,260

[a] Typical bulk plant with 19,000 liters (5,000 gal) per day throughput, with three storage tanks with a total capacity of 190,000 liters (50,000 gal).

[b] Emission factors from U.S. EPA, Control of Volatile Organic Emissions From Bulk Gasoline Plants, EPA-450/2-77-035 (OAQPS No. 1.2-085) December 1977.

[c] Based on working day (286 days per year).

Table 2-9. POTENTIAL HYDROCARBON EMISSIONS FROM SERVICE STATIONS[a,b]

	Emission Factors		Hydrocarbon Emissions			
	$kg/10^3$ liter thruput	$lb/10^3$ gal thruput	kg/day	lb/day	gal/day	10^3 kg/yr
Underground tank breathing	0.12	1	0.59	1.3	0.3	212
Underground tank filling						
Submerged	0.88	7.3	4.3	9.5	1.9	1,558
Splash	1.38	11.5	6.8	15.0	2.9	2,440
Balanced	0.04	0.3	0.2	0.4	0.1	71
Vehicle refueling	1.8	9	5.3	11.7	2.3	1,910
Spillage	0.084	0.7	0.4	0.9	0.2	149

[a] Typical service station with a throughput of 147,500 liters (39,000 gal) per month and three underground storage tanks of 38,000 liters (10,000 gal) each.

[b] Emission factors from U.S. EPA, Supplement No. 7, Compilation of Air Pollutant Emission Factors, April 1977.

water per 5 minutes. This, however, assumes a constant leak rate and could be considered worst-case. Additional studies indicate that transit loss would normally not exceed 1.0 kg (2.2 lb) based on the average 5,000 gal tank truck.[23] When the more stringent criterion for a leak rate (of 1 inch of water per 5 minutes) must be attained, a truck will emit no more than 0.46 kg (1.0 lb) of hydrocarbons per trip.[20]

2.4 MARKET TRENDS

The overall domestic demand for gasoline increased continuously from 293 billion liters (77.4 billion gal) in 1967, to 390 billion liters (103 billion gal) in 1973; it dropped slightly in 1974 prior to resuming its upward trend to hit a new high of 405 billion liters (107 billion gal) in 1976 (refer to Table 2-1). Gasoline sales at service stations have decreased slightly from the peak of 292 billion liters (77.2 billion gal) in 1973. This decrease is due primarily to the increase in the average distance traveled per unit gallon of gasoline and a slight decrease in unit automobile usage for 1974 and 1975.[2] If the individual automobile usage remains constant and the trends in gasoline mileage and private car ownership continues, gasoline sales at service stations should remain within the range of 275 to 285 billion liters (73 to 75 billion gal) annually for the next few years.

2.4.1 TERMINALS

Although the total sales of gasoline increased substantially from 1967 to 1972, the Census Bureau data show a 28.7 percent drop in the number of terminals from 2,701 in 1967 to 1,925 in 1972 (refer to Table 2-2).[2,24] According to NPN Factbook Issue data, the total number of terminals decreased from 1,031 to 994 (from 1975 to 1976), and then increased to 1,081 in 1977.[2] However, when data inputs from identical respondents were compared, there was a net increase of 25 terminals in 1976 and 40 terminals in 1977.

In any event, marketers are taking a closer look at the economics of terminal operations with a view toward elimination of or joint operations of terminals with other marketers. More efficient operations of terminals and increased deliveries to end users and retailers appear as likely trends.[2]

2.4.2 BULK PLANTS

For census years 1967 and 1972, the number of bulk plants decreased 11.2 percent, from 26,338 to 23,367. Based on data from companies reporting in the NPN Factbook Issues for 1975, 1976, and 1977, the number of bulk plants represented was about 21,500 in 1975, 19,700 in 1976, and 17,400 in 1977.[2] Since all companies do not respond to questionnaires, these totals are probably less than the actual number of bulk plants.

The major oil companies accounted for the total decrease in bulk plants for 1975-1976, while both majors and independents contributed equally to the decrease in 1976-1977. One of the prime reasons for the decrease is that larger service stations with higher throughputs are being constructed permitting more direct deliveries from terminals. Operating bulk plants then tend to decrease in profitability for oil companies who can supply their station directly from the terminals.

Similarly, bulk plant operators have been aggressively increasing the amount of gasoline sold by direct delivery from terminals to the customer. In addition to increased profitability for the bulk plant, there is a belief that current state requirements to install vapor recovery on bulk plants can be circumvented by sharply curtailing the amount of gasoline pumped through the plant and delivered to nonexempt accounts.[8]

The significant decrease in the number of bulk plants is expected to continue due to competitive pressures and other economic

considerations which have reduced profitability and have made it difficult to sell bulk plants for the marketing of gasoline.

2.4.3 SERVICE STATIONS

Unlike terminals and bulk plants, the census data for 1967 and 1972 show a 4.8 percent increase in service stations from 216,059 to 226,459. The number of the service stations began to decline in 1973 to about 184,000 at the beginning of 1977 (refer to Table 2-10). As noted previously, the quantity of gasoline sold at service stations reached a peak in 1973, and is expected to remain below that peak for the near future. Total dollar sales, however, have continued to increase, as shown in Table 2-10.

Although new service stations continue to be built, the number of stations that have been deactivated during the past 3 years, based on limited inputs, is over 20 times the number of new stations (Table 2-11). (A new station is one which has been built completely new on a site and does not include complete rebuilds.)

For the past few years, most of the capital spending for gasoline marketing has been allocated to remodeling or rehabilitating existing service stations.[2] Significant numbers of these stations have been converted to at least partial self-service stations. NPN Factbook Issue for 1976 indicates a 128 percent growth in self-service operations during 1976, which does not include stations that are changing to split operations.[2] This trend toward inclusion of some self-service bays in service stations is expected to continue at a significant rate. In a survey conducted in the last week of April 1977 by Lundberg interviewers, there appeared to have been a surge of self-service openings or conversions during the preceding 6 months, as shown in Table 2-12.[12]

Table 2-10. SERVICE STATION TRENDS[a]

Year	Total Number	Gasoline Sales (10^9 gal)	Total Sales (10^9 $)
1977	184,000[b]	74.7	52.8[d]
1976	186,840[b]	73.4	47.9[d]
1975	189,480[b]	76.0	44.0[d]
1974	196,130	73.8	41.0
1973	215,880	77.2	34.4
1972	226,459[c]	72.9	33.7
1971	220,000	68.8	29.2
1970	222,000	65.3	27.9
1969	222,000	62.0	25.9
1968	219,100	58.1	24.5
1967	216,059[c]	54.8	22.7
1966	214,000	52.9	21.8

[a] NPN Factbook Issue 1976, 1977 (Reference 2)

[b] Franchising in the Economy 1975 - 1977 (Reference 25)

[c] Bureau of Census

[d] Projected by NPN

Table 2-11. NEW AND DEACTIVATED SERVICE STATIONS[a]

Year	New Stations	Stations Deactivated
1976[b]	330	5,829
1975[c]	189	4,127
1974[d]	206	6,041
1973[d]	1,177	9,342
1972	1,689	3,498
1971	2,068	3,630
1970	2,508	3,586
1968	3,740	4,554

[a] NPN Factbook Issue 1976, 1977 (Reference 2)

[b] Data from 28 companies

[c] Data from 25 companies

[d] Data from 23 companies

Table 2-12. DURATION OF SELF-SERVE OPERATIONS BY LUNDBERG SURVEY RESPONDENTS

(SELF-SERVE TRENDS)[a]

Number of Years Self-Service	Percent of Respondents
Less than 1/2	26
1/2 - 1	10
1 - 2	21
2 - 3	14
3 - 5	26
5	3

[a]Based on data from Lundberg Letters, Volume IV, No. 28, May 13, 1977

Furthermore, a majority of the retailers contacted expect that self-service volume will increase to at least 70 percent of the gasoline sold at service stations.

Recent actions to permit self-service in Ohio and Illinois should assist in the trend toward more self-service stations. New Jersey, Oregon, and North Dakota have not yet approved self-service gasoline stations.

Another trend in gasoline marketing is the increase in other retail or service-type stores selling gasoline. For instance, the number of convenience stores selling gasoline increased from 5,375 in 1974 to 7,400 in 1975, which is 27 percent of the total number of convenience stores.[11]

These trends toward self-service stations and convenience store outlets will apparently continue, where permissible, for the next few years. The incentives are cost-efficiency, lower prices, and increased total throughput with fewer service stations.

REFERENCES FOR SECTION 2.0

1. U.S. Department of Commerce, Domestic and International Business Administration, Franchising in the Economy 1975-1977, Washington, D.C.

2. National Petroleum News (NPN), Factbook Issue, "Mid-May Annuals," 1975, 1976, 1977

3. Radian Corp., A Study of Vapor Control Methods for Gasoline Marketing Operations, Vol. I, Austin, Texas, EPA-450/3-75-046-a, April 1975

4. Peterson, P. R., et al., Evaluation of Hydrocarbon Emissions From Petroleum Liquid Storage, Pacific Environmental Services, Inc., for U.S. EPA, EPA 450/3-78-012, March 1978

5. Bryan, R.J., et al., Compliance Analysis of Small Bulk Plants, PES, EPA Contract No. 68-01-3156, Task 17, December 1976

6. Bryan, R.J., et al., Economic Analysis of Vapor Recovery Systems on Small Bulk Plants, PES, EPA Contract No. 68-01-3156, Task 24, September 1976

7. Bryan, R.J., et al., Evaluation of Top-Loading Vapor Balance Systems for Small Bulk Plants, PES, EPA Contract No. 68-01-4140, Task 9, April 1977

8. Bryan, R.J., Yamada, M.M., and Norton, R.L., Effects of Stage I Vapor Recovery Regulations on Small Bulk Plants and on Air Quality in the Washington,D.C., Baltimore, Md., and Houston and Galveston, Tex. Areas, PES, EPA Contract No. 68-01-3156, Task 28, March 1977

9. Bryan, R.J., et al., Study of Gasoline Vapor Emissions Controls at Small Bulk Plants, PES, EPA Contract No. 68-01-3156, Task 15, October 1976

10. Arthur D. Little, Inc., The Economic Impact of Vapor-Recovery Regulations on the Service Station Industry, for U.S. Department of Labor, OSHA, March 1978

11. American Petroleum Institute (API), Gasoline Marketing, Publication 1589, Washington, D.C., December 1976

12. Lundberg Letters, A Weekly of Statistics and Related Petroleum Industry News, Tele-Drop Inc., N. Hollywood, Calif., May 13, 1977

13. Arthur D. Little, Inc., The Economic Impact of Vapor-Recovery Regulations on the Service Station Industry, Appendixes, for U.S. Department of Labor, OSHA, March 1978

14. API, "Evaporation Loss From Fixed-Roof Tanks," API Bulletin 2518, Washington, D.C., June 1962

15. Burklin, C. E. and Honerkamp, R.L., Revision of Evaporative Hydrocarbon Emission Factors, Radian Corp., North Carolina, EPA-450/3-76-039, August 1976

16. API, "Evaporative Loss From Floating Roof Tanks," API Bulletin 2517, Washington, D.C., February 1962

17. Engineering-Science, Inc., Hydrocarbon Emissions From Floating-Roof Storage Tanks, prepared for the Western Oil and Gas Assoc., Calif., January 1977

18. Mobil Oil Corp., "Floating Roof Tank Evaporative Loss Study," Statement for CARB Workshop, Los Angeles, Calif., December 17, 1976

19. T1-3 Petroleum Committee, "Control of Atmospheric Emissions From Petroleum Storage Tanks," JAPCA, Vol. 21, No. 5, May 1971, pp. 260-268

20. CARB, Public Hearing -- Certification and Test Procedures for Gasoline Vapor Recovery Systems for Bulk Plants, Terminals and Delivery Tanks, March 1977

21. U.S. EPA, Compilation of Air Pollutant Emission Factors, Supplement No. 7, April 1977

22. U.S. EPA, Control of Volatile Organic Emissions From Bulk Gasoline Plants, EPA-450/2-77-035 (OAQPS No. 1.2-085), December 1977

23. R.A. Nichols Engineering, "Tank Truck Leakage Measurements," June 7, 1977 and transmittal letter to H.B. Uhlig, Chevron USA, Inc., San Francisco, Calif., June 10, 1977

24. U.S. Dept of Commerce, 1972 Census of Wholesale Trade, August 1976

25. U.S. Dept. of Commerce, Domestic and International Business Administration, Franchising in the Economy, 1975-1977

3.0 HYDROCARBON EMISSION CONTROL STRATEGIES

3.1 TERMINALS

The emission control technology for terminals is the most developed of those available to the gasoline marketing industry. For many years, certain regions have had regulations requiring emission controls and have thus encouraged the development of emission control systems for terminals. Also, the petroleum industry has viewed certain terminal emission controls as a means of conserving valuable commodities. This section discusses some of the control measures available for hydrocarbon emissions at the terminal, and Section 4.0 assesses such parameters as cost (capital and operation), efficiency, reliability, safety, and impacts of these control systems.

3.1.1 STORAGE CONTROL STRATEGIES

Uncontrolled fixed-roof storage tanks can account for a large amount of gasoline emissions from a terminal.[1] As discussed in Paragraph 2.2, these tankage losses occur from breathing, evaporation, filling, and emptying. Installation of internal floating roofs is the major approach for controlling fixed-roof tank emissions. Replacement with floating roof tanks or installation of variable vapor-space tanks are alternatives.

3.1.1.1 Floating Covers

Floating covers are rigid covers floated on the surface of the volatile liquid which is being contained to eliminate vapor spaces. Sliding seals are attached to the edge of the floating cover to close the space between the edge and the tank wall. Thus, both vaporization and leaks are reduced.

There are three basic types of floating roofs: the pan, the pontoon, and the double deck. The simplest floating roof and the one with the longest history is the pan type. This consists of a flat metal pan with a vertical rim and sufficient stiffening braces to maintain rigidity. Although simple and relatively inexpensive, the pan floating roof is now seldom used externally. Tilting, holes, and heavy snows and rain have caused 20 percent of these roofs to sink.[2]

In order to overcome the problem of sinking and stability, pontoon sections are added to the top of the pan around the rim. Pontoon roofs, also, are rarely used as external floaters, since solar heat is readily conducted through the single metal plate resulting in high vaporization losses.

Extending the pontoon sections to completely cover the roof results in the double-deck roof. For external floaters, the expense of this design is generally considered to be justified by the added rigidity and by the insulation provided by the dead air space between the upper and lower deck plates. The compartmented dead air space supposedly provides enough insulation to significantly reduce vapor losses.

The most common form of internal floating cover is the internal pan. Since the fixed roof protects the floating roof from the weather, no provision is required for rain water removal. Maintenance is reduced since the internals, particularly the seals, are protected from the weather and the product is less likely to be contaminated by dirt or water. Retrofitting of fixed-roof tanks with internal floaters may require tank cleaning, refurbishment, and modification. However, the cost is usually less than the cost of replacement with a floating roof tank.

As previously mentioned, the principle by which a floating roof controls emissions from a volatile liquid is that of eliminating the vapor space so that the liquid cannot evaporate and later be vented. To be successful, the floating roof must completely seal off the liquid surface from the atmosphere. The ideal seal would be vaportight, long lasting, and require little maintenance. However, some clearance may exist between seal and tank wall for roof movement. Sectional views of sealing mechanisms are shown in Figure 3-1. The floating section is customarily constructed about 20.32 cm (8 in.) less in diameter than the tank shell.[1] A sealing mechanism must be provided for the remaining open annular gap. The seal also helps keep the roof centered.

3.1.1.2 Variable Vapor-Space Tanks

The objective in employing a variable vapor-space tank at a terminal is to prevent losses from expansion and contraction of vapor and to provide storage for vapors until they can be processed in a vapor recovery unit. The variable vapor-space tank can be manifolded to the vapor space of fixed-roof tanks, the loading rack, and the vapor recovery unit through a vapor gathering system. They can also be integrated to hold liquid. Two common types of variable vapor-space tanks are the lifter roof (Figure 3-2) and the flexible diaphragm (Figure 3-3).[3] Expanded and displaced vapors are stored in the variable vapor space, then sent to the vapor recovery unit when the vapor holder is filled. Since variable vapor-space tanks are now rarely built, no further discussion is presented.

simplification of design. Bottom-loading vapor recovery has many advantages over top-loading vapor recovery. The operator does not have to walk on top of the truck. Bottom loading is safer from a static electricity point of view and allows faster loading because of the capacity to simultaneously load several compartments with fewer operational steps.

Bottom-loading vapor recovery is also more advantageous because hatches do not have to be opened for gasoline transfer. Top loading, which requires the opening of truck hatches, subjects much more wear and tear on the hatches and seals. Therefore, truck hatch/seal integrity is maintained for a longer period of time on bottom-loading trucks. Additionally, less vapor loss occurs during attachment and detachment of gasoline transfer systems if hatches are not opened.

In the truck modification, the vents on top of the trucks are manifolded together and a single vapor vent line is brought down the truck towards the bottom-loading connections. A quick-acting coupling is attached to the end of the vapor line to permit easy connection of the flexible vapor transfer line.

3.1.2.2 Vapor Recovery Units

Vapor collection units are manifolded into the vapor recovery system at bulk terminals for conversion of the gasoline vapor into liquid product. Vapor collection systems channel excess vapors from the loading rack and the gasoline tankage to the vapor recovery unit. This section reviews some of the vapor recovery systems applicable to terminals.

3.1.2.2.1 Compression-Refrigeration-Absorption Systems (CRA)

The compression-refrigeration-absorption (CRA) vapor recovery system is based on the absorption of gasoline vapors under pressure with cool gasoline from storage. The primary unit in a CRA system is the absorber with the remaining components serving to condition the vapor and liquid entering the absorber, improve absorber efficiency, reduce thermal losses, and/or improve system safety.

Incoming vapors are first passed through a saturator where they are sprayed with gasoline to insure that the hydrocarbon

concentrations of the vapors are above the upper explosive limit. This is done as a safety measure to reduce the hazards of compressing hydrocarbon vapors. The partially saturated vapors are then compressed and cooled prior to entering the absorber. In the absorber, the cooled, compressed vapors are contacted by chilled gasoline drawn from product storage and are absorbed. The remaining air, containing only a small amount of hydrocarbons, is vented from the top of the absorber and gasoline, enriched with light ends, withdrawn from the bottom of the absorber, and returned to the gasoline storage tanks. The operating conditions in the absorber vary with the manufacturer and range from $-10^{o}F$ to ambient temperature and from 45 to 210 psig. Figure 3-5 shows a schematic diagram of CRA vapor recovery systems.

3.1.2.2.2 Compression-Refrigeration-Condensation Systems (CRC)

Compression-refrigeration-condensation (CRC) vapor recovery systems are based on the condensation of hydrocarbon vapors by compression and refrigeration. Incoming vapors first come in contact with the recovered product in a saturator and are saturated beyond the flammability range. The saturated vapors are then compressed in a compressor. The compressed vapors are then passed through a condenser where they are cooled, condensed, and returned to the gasoline storage tank. Essentially hydrocarbon-free air is vented from the top of the condenser. Operating conditions vary with the manufacturer, with temperatures ranging from -10° to $30^{o}F$ and pressures ranging from 85 to 410 psig.[6,7] Figure 3-6 shows a schematic diagram of CRC vapor recovery systems.

3.1.2.2.3 Refrigeration Systems

This system is based on the condensation of gasoline vapors by refrigeration at atmospheric pressure. In this system,

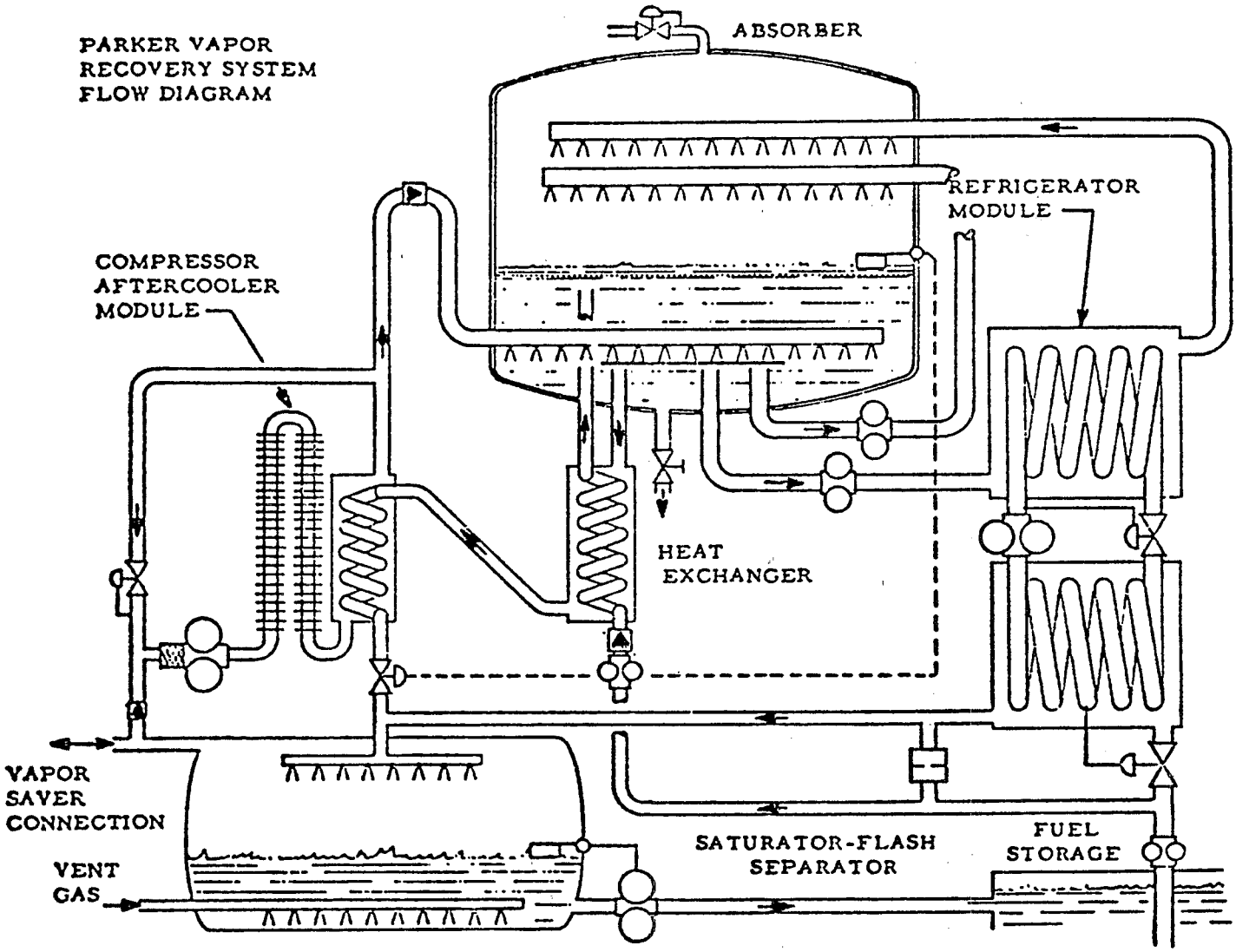

Source: Scitech Corp., Santa Ana, Calif.

Figure 3-5. Compression-Refrigeration-Absorption (CRA) System

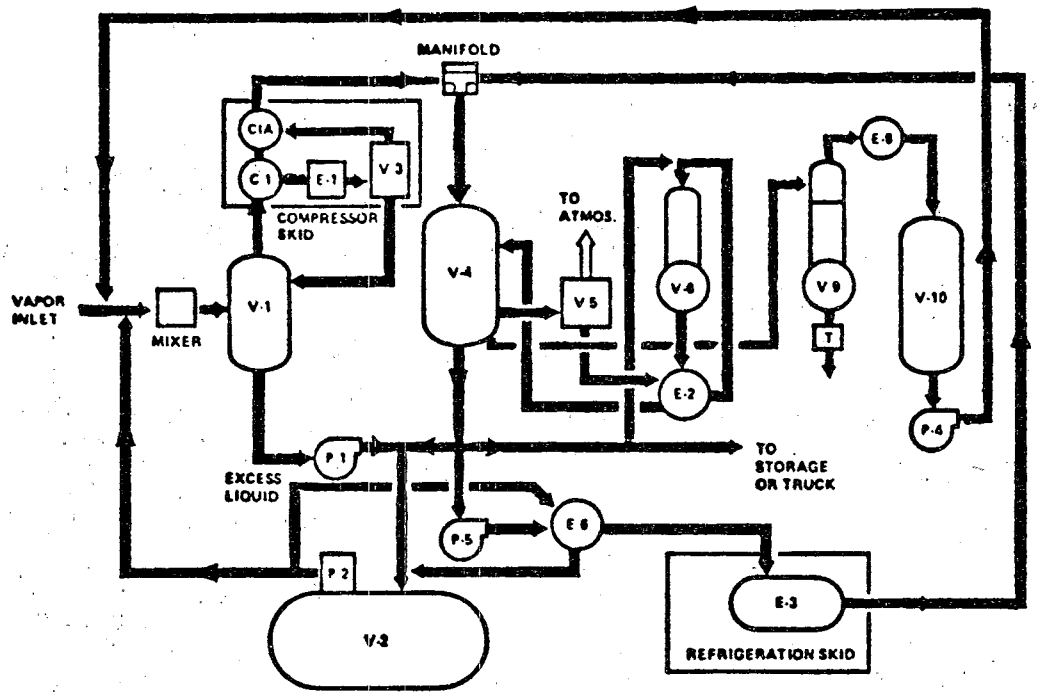

V-1	SATURATOR	E-1	INTERSTAGE COOLER
V-2	RECOVERED PRODUCT STORAGE	E-2	HEAT EXCHANGER
V-3	VAPOR-LIQUID SEPARATOR	E-3	HEAT EXCHANGER
V-4	CONDENSER	E-5	HEAT EXCHANGER
V-5	VAPOR-LIQUID SEPARATOR	E-6	HEAT EXCHANGER
V-6	ABSORBER	P-1	PUMP
V-9	METHANOL-WATER FRACTIONATOR	P-2	PUMP
V-10	METHANOL STORAGE	P-4	PUMP
C-1	FIRST STAGE COMPRESSION	P-5	PUMP
C1A	SECOND STAGE COMPRESSION		

Source: See Reference 1.

Figure 3-6. Compression-Refrigeration-Condensation (CRC) System

displaced vapors enter a horizontal fin-tube condenser where they are cooled to -90° to -100°F and condensed.[6,7] Because vapor is treated as it is evolved, no vapor holder is required. Condensate is withdrawn from the condenser bottom and the remaining air, containing only a small amount of hydrocarbons, is vented from the condenser top. Cooling for the condenser coils is supplied by a methylene chloride reservoir. Figure 3-7 shows a schematic diagram of refrigeration systems.

3.1.2.3 Emission Control Units (Incineration)

Incineration units are used to control the emissions from the terminals without attempting to convert the gaseous emissions back to liquid form. The gasoline vapor air mixture generated from the transfer operations can be routed to a vapor holder. When the capacity of the holder is reached, the gasoline air-vapor mixture in the holder is routed to the incineration unit where it is oxidized before being released into the atmosphere.

3.2 BULK PLANTS

As mentioned in Paragraph 2.2, the primary emission sources at bulk stations are incoming and outgoing transfer operations and storage tanks. This section discusses the control measures available for hydrocarbon emissions at the bulk plants.

3.2.1 CONTROL STRATEGIES FOR INCOMING TRANSFER

Transfer losses from incoming gasoline to bulk plants are controlled primarily by submerged fill and vapor balance systems.

3.2.1.1 Submerged Fill

Submerged fill is the introduction of liquid gasoline into the tank being filled with the transfer line outlet being below

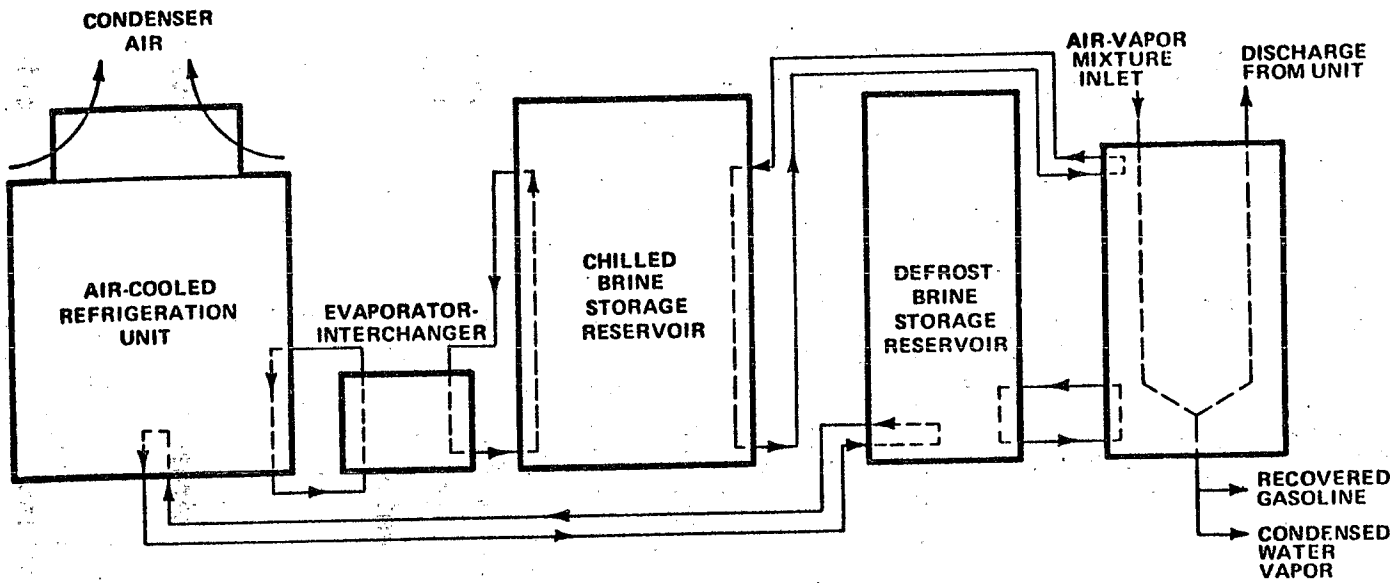

Source: Edwards Engineering Corp., Pompton Plains, N.J.

Figure 3-7. Refrigeration System

the liquid surface. This is compared to splash loading, where the transfer line outlet is at the top of the storage tank. Submerged filling minimizes droplet entrainment, added vaporization, and turbulence.

Aboveground storage tanks are normally filled through a horizontal fillpipe located on the side of the storage tank near the bottom. Thus, submerged fill of aboveground storage tanks is normally included in the design. Submerged fill for underground storage tanks can be accomplished by attaching a pipe or drop tube to the fillport which extends to within 15 cm (6 in.) of the tank bottom.

3.2.1.2 Vapor Balance System

This system is the most common method of emissions control for incoming gasoline transfer. A pipeline between the vapor spaces of the truck and storage tanks essentially creates a closed system permitting the vapor spaces of the tank being filled and the truck being emptied to balance with each other. The net effect of the system is to transfer vapor displaced by liquid in the storage tank into the truck. This prevents the compression and expansion of vapor spaces which would otherwise occur in a filling operation. If a system is leak tight, very little or no air is drawn into the system, and venting, due to compression, is also substantially reduced.

Typical facility modifications involve adding aboveground piping from the incoming truck unloading area to a manifold interconnected with all gasoline storage tanks. Unleaded gasoline may have separate vapor lines to prevent contamination. The vapor return piping is generally 5 to 8 cm (2 to 3 in.) in nominal diameter, and it is sloped on horizontal runs to drain any condensate. Nonmetallic piping may be used if local codes allow their use.

3.2.1.3 Secondary Systems

No secondary system, designed solely for the control of emissions during incoming transfer of gasoline, was observed at bulk plants of less than 76,000 liters (20,000 gal) per day in San Diego, San Joaquin Valley, Denver, Baltimore, Washington, D.C., or the Houston/Galveston area.[8,9]

3.2.2 CONTROL STRATEGIES FOR STORAGE TANKS

Storage tank losses at bulk plants occur due to breathing, evaporation, filling, and emptying. Applicable measures to control tankage losses in bulk plants include underground tanks, pressure-vacuum vents, shading, refrigeration, and other secondary processing.

3.2.2.1 Underground Tanks

Although underground tanks were never specified solely for the purpose of reducing breathing losses, they do accomplish this purpose by maintaining a relatively constant temperature.

3.2.2.2 Secondary Systems

The most promising secondary systems appear to be refrigeration and adsorption. Both are somewhat developed, can potentially be applied to bulk plants, and are capable of controlling emissions due to breathing and working losses. Disadvantages include cost and development time.

Other secondary systems suffer from safety problems (oxidation), system complexity, and high cost for use in small-scale (compression-refrigeration-condensation), or required development (absorption). Secondary systems have been unsuccessfully tested at a few bulk plants. Costs are not available and their

application is tentative, thus discussions of specific systems are not included.

3.2.3 CONTROL STRATEGIES FOR OUTGOING TRANSFERS

The control of transfer losses during loading mainly involves submerged fill and the vapor balance system.

3.2.3.1 Submerged Fill

As already mentioned, submerged filling minimizes droplet entrainment and added vaporization and reduces the losses during loading.

Bottom loading of trucks, by definition, includes submerged filling. Top-loaded trucks can be submerged-filled by either a nozzle extension on the top-loading arm or a drop tube permanently attached to the account truck.

3.2.3.2 Vapor Balance System

As in other balance systems described, a pipeline between the vapor spaces of the two vessels (in this case the account truck and the storage tank) creates a closed system permitting the vapor spaces to balance with each other.

3.2.3.2.1 Bottom Loading

Balance systems associated with bottom-loading facilities incorporate separate fuel and vapor attachments to the account truck. The vapor return line runs from the storage tank to the loading rack and a flexible hose is connected. The flexible hose allows hookup to the account truck from many positions and distances. A vaportight fitting is attached to the end of the return line so that vapors will not escape from the system when

it is not in use. This fitting is compatible with the vapor return connection on the account truck.

The vapor balance system associated with bottom-loading facilities has advantages over top-loading vapor balance systems because the operator can stand on the ground, loading is faster, and the installation cost for vapor recovery on an existing bottom-loaded facility would be low. However, if the conversion of the bulk plant loading rack from top to bottom loading is included in the vapor recovery cost, the total system cost for bottom-loading vapor recovery is higher.

3.2.3.2.2 Top Loading

Several top-loading vapor recovery balance systems are available for installation at the bulk plant loading racks. These systems can be divided into three main categories: (1) those systems which require major loading rack conversion and minimal account truck conversion; (2) those systems which require minimal loading rack conversion and consist mostly of account truck modifications; and (3) those systems which require minimal modifications to the loading rack and the truck.[10-14]

The system which requires the most loading rack conversions is the combination vapor recovery and product delivery loading arm (Figure 3-8). The installation of these arms requires that the vapor return line be run to each of the loading arms. The top-loading arms are also quite heavy (up to 2,000 lb) and some require a supply of compressed air for operation.[12,13] Since most bulk plants do not have an air compressor, this additional installation would have to be included in the system cost. No modifications to the account truck for loading is necessary since the loading arms fill through the hatch opening. The seal on the hatch can be accomplished with a mechanical connection or the use of a pneumatic fitting.

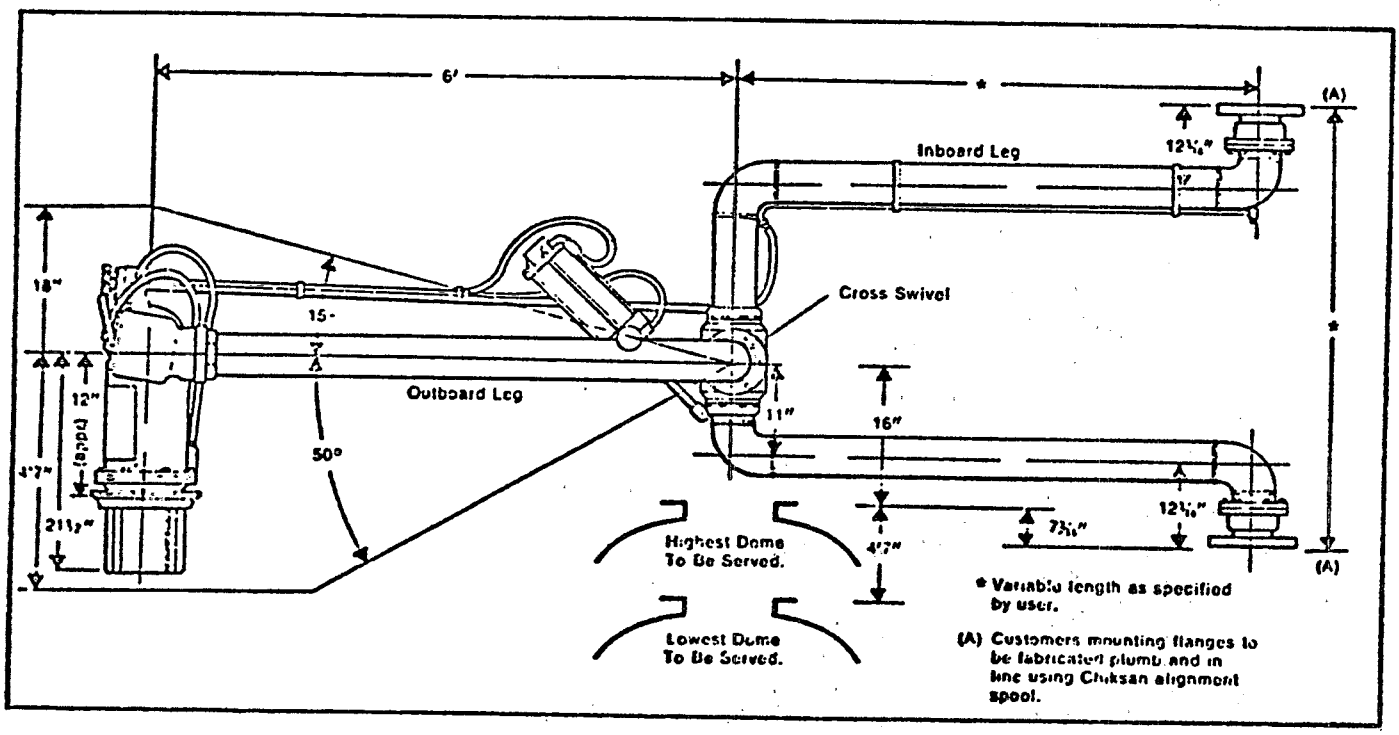

Source: FMC Corporation, Brea, Calif.

Figure 3-8. Top-Loading Vapor Recovery Arm

The system that requires the least loading rack conversion uses a vapor recovery connection identical to that which is used at bottom-loading facilities. The only modification to the loading rack is the installation of a flexible hose to the top-loading arm and the connection of a nozzle or fitting. However, modifications to the truck include the fitting of a vaportight fill connector, a vapor return connection, and an overfill protection device to each compartment. The vapor return connections must be manifolded to a common vapor return line with a fitting compatible with a flexible vapor return line. A submerged fill pipe with the vaportight connector is permanently attached to each compartment and fitted with a cap to eliminate vapor leakage and entrance of dirt and other foreign substances. With the addition of an overfill protection device, this installation (Figure 3-9) provides vapor control efficiencies similar to bottom-loaded systems.

The third system requires no account truck modification for loading and only slight loading rack conversion. The loading arm is modified with a flexible hose and connector as mentioned previously. The vapor return line is run to each loading arm and a vaportight connector attached. The system relies on the use of a portable adaptor that is attached to the truck hatch opening through a mechanical clamping system.[15] This portable adaptor can be carried from one hatch to the next since it weighs only 28 pounds and can be coupled to each different loading arm.

All top-loading systems which require that the truck hatch be opened for attachment of the loading arm or adaptor are not vapor controlled when the hatch is opened and the loading arm or adaptor is not connected. Vapor loss due to possitive pressure in the truck compartments can occur during this period.

3.3 SERVICE STATIONS

Control concepts to be discussed in this section will include controls for emissions from the delivery of gasoline to the service station and emissions during automobile refueling.

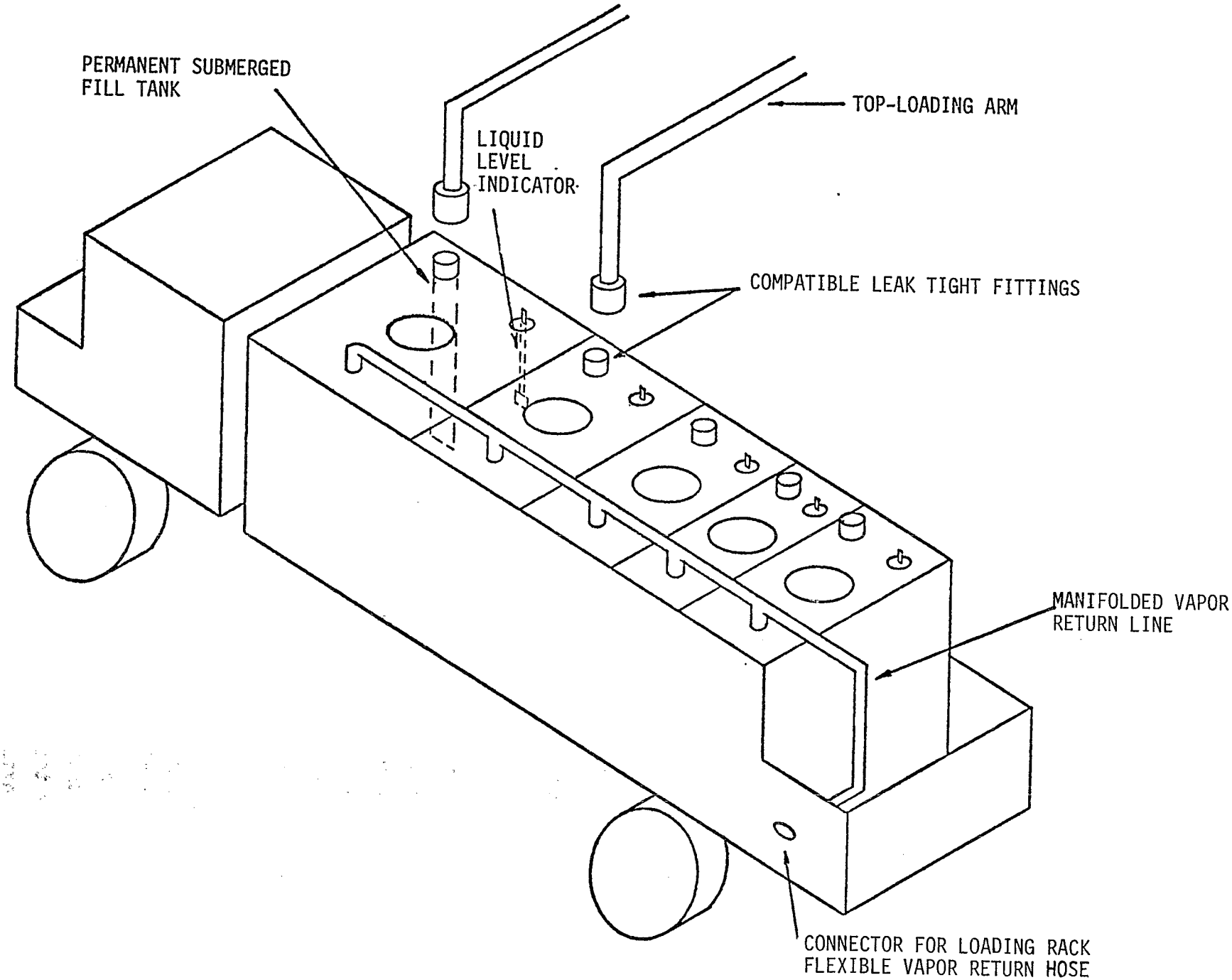

Figure 3-9. Top-Loading Vapor Recovery System

3.3.1 DELIVERY OF GASOLINE TO THE SERVICE STATION (STAGE I)

3.3.1.1 Submerged Fill Tubes

The easiest and most basic concept for controlling the emissions of gasoline vapors from the loading of the underground storage tanks is the installation of a submerged fill pipe. As previously mentioned in this section, the submerged loading of gasoline is an effective method of controlling or reducing splash loading of gasoline.

The submerged fill pipe is easily installed in the fill port of the underground tank and extends to within 15.2 cm (6 in.) of the bottom of the storage tank. These fill tubes can be obtained commercially or can be constructed from common pipe.[12]

3.3.1.2 Balance System

The control concept used almost exclusively for reducing the emissions from the unloading of gasoline from the truck into the underground storage tank is the balance system because of its efficiency and cost-effectiveness. The balance system is simply the plumbing together of two vapor spaces (in this case the underground storage tank and the delivery truck) and allowing the dispensed liquid in one vessel to balance with the displaced vapors in the other vessel. The balance system at the service station for the filling of the underground tanks controls the working losses from the storage tanks.

In the case of Stage I deliveries, the balance system consists of a manifolded vapor return line on the delivery truck, a vaportight fitting plumbed into the vapor space of the storage tank, and a flexible hose which connects the two. The fitting used to connect the flexible vapor hose and the gasoline delivery hose from the truck may have a separate attaching location or be of the coaxial type.[11,12,15]

To enhance the collection of vapors during Stage I deliveries, some balance systems have incorporated the use of orifice restrictors on the storage tank vent line. This orifice is installed to apply a slight restriction to the flow of vapors out of the storage tank during a delivery and allows the return vapor line to the delivery truck to be the path of least resistance. Also, this restriction encourages the connection of the vapor return line since the rate of gasoline transfer would be slowed if the restricted vent were the only outlet for the displaced vapor.

3.3.2 AUTOMOBILE REFUELING (STAGE II)

Controls for the refueling of automobiles are designed to minimize emissions of the displaced gasoline vapors from the vehicle fuel tank. Methods or control concepts to capture the displaced vapors include the balance system, the vacuum-assisted vapor recovery system, and the hybrid system.

3.3.2.1 Vapor Balance System

The vapor balance system is the simplest mode of control of the vapors released from automobile refueling. The system is similar to the other balance systems discussed in that the vapor spaces of the automobile tank and the gas station underground storage tank are connected through piping and allowed to balance with each other. The vapors forced from the fuel tank, due to the displacement from the dispensed gasoline, pass through the nozzle and into a flexible vapor return hose. This hose is connected, through the pump housing, to the underground vapor return piping (normally 2 in. pipe) which is connected to the vapor space of the underground storage tank (Figure 3-10).

Problems associated with the vapor balance system included liquid blockage in the vapor return line, nozzle wear, and

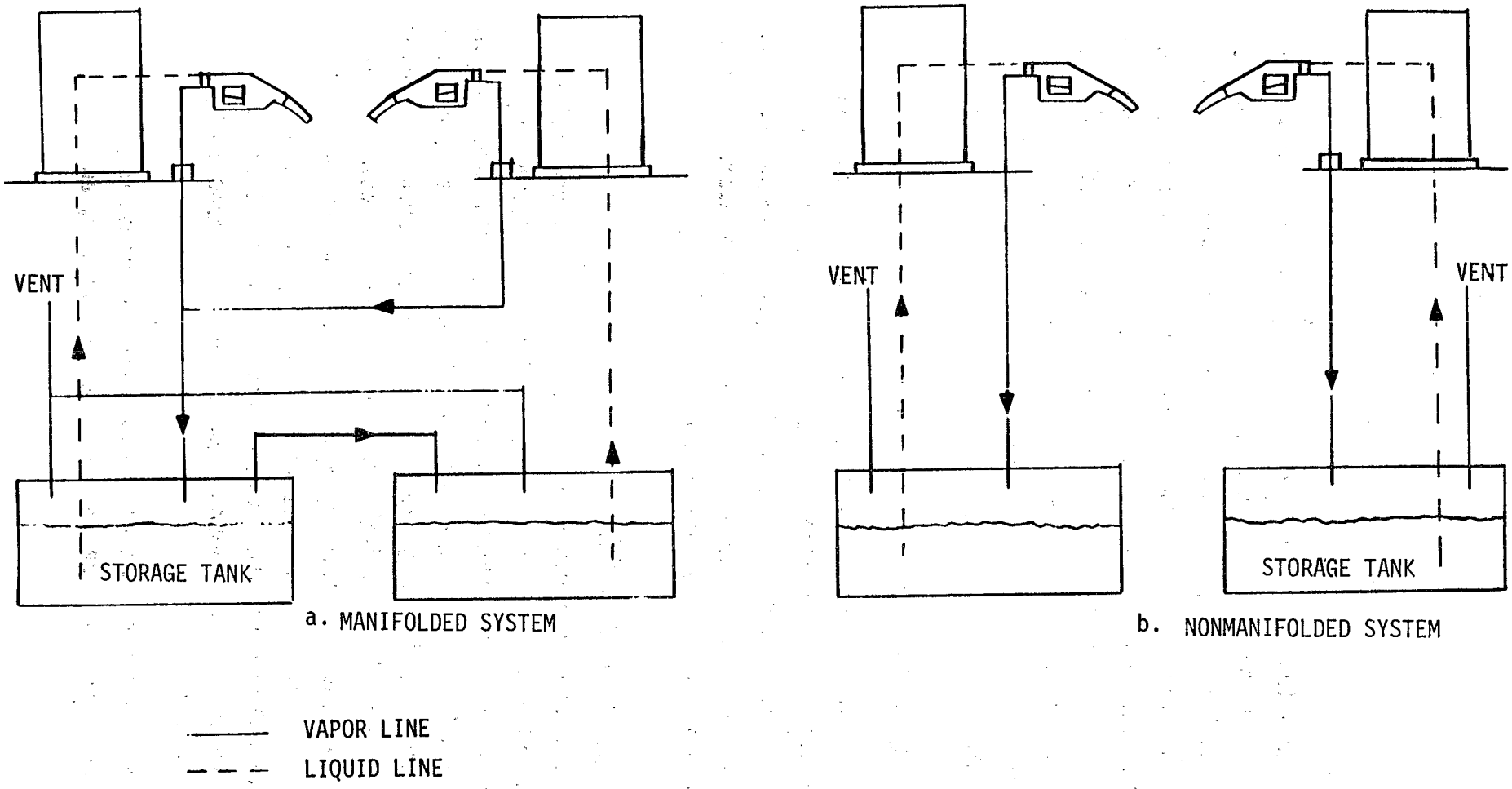

Figure 3-10. Vapor Balance Systems

loss of vapors at the nozzle if there is a poor fit. Liquid blockage can occur in the vapor return line by the entrance of liquid gasoline flowing past the nozzle into the return system. This blockage can be caused by a slow reacting or faulty shutoff mechanism or by condensation of liquid in the return line. To eliminate this problem, liquid blockage sensors can be installed in the vapor return line. To prevent loss of vapors due to poor fit, nozzles incorporate "no-seal, no-flow" technology in which flow of gasoline cannot be initiated until the nozzle boot has been properly opened or latched.

Nozzles used with the vapor balance system incorporate a rubber boot and faceplate which is attached over the nozzle delivery spout and is designed to cover the gasoline fillneck on the automobile (see Figure 3-11). The dispensed vapors travel through the nozzle into the vapor return line. A flow check valve is installed in the vapor return side of the nozzle which will allow vapors to flow into the system, but will not allow them to escape when the nozzle is not in use. A problem of excessive wear on the rubber faceplate in contact with the gasoline fillneck existed with some of the earlier nozzles used in the balance system.[16]

3.3.2.2 Vacuum-Assist System

The vacuum-assist systems are so called because of the use of an in-line blower in the vapor return line to apply a slight vacuum (1-2 in. H_2O) at the nozzle/fillneck interface. This slight vacuum draws in air around the fillneck and enhances the collection of vapors into the system. The nozzles used in the vacuum-assist system are designed to allow the entrance of air into the system and therefore do not have a sealing faceplate on the flexible nozzle boot. Also, the problem of wear on the vacuum-assist nozzles is greatly reduced with the elimination of the faceplate.

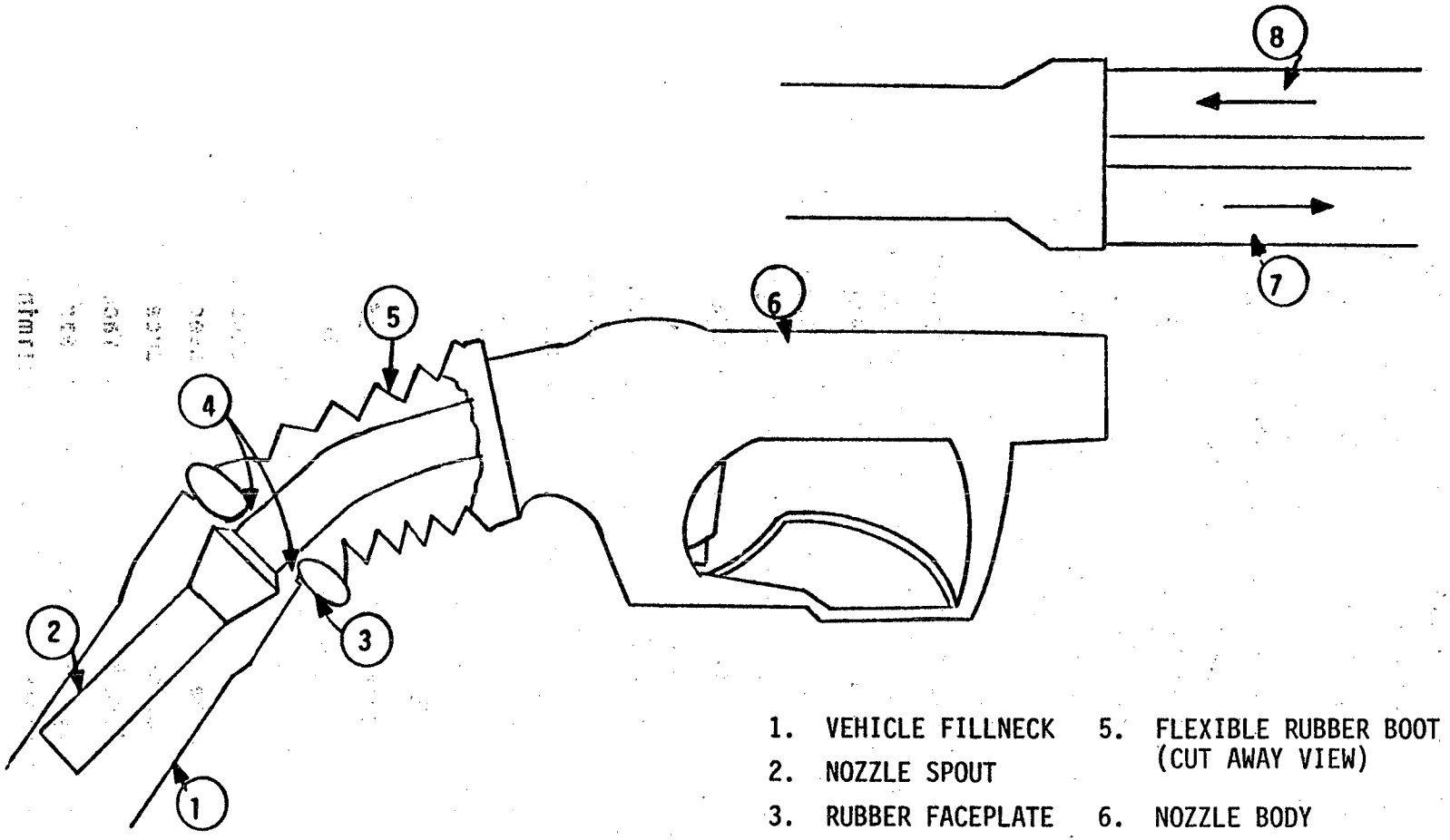

1. VEHICLE FILLNECK
2. NOZZLE SPOUT
3. RUBBER FACEPLATE
4. VAPOR PATCH
5. FLEXIBLE RUBBER BOOT (CUT AWAY VIEW)
6. NOZZLE BODY
7. VAPOR HOSE
8. PRODUCT HOSE

Figure 3-11. Balance System Vapor Recovery Nozzle

Air entering the system creates a larger volume of vapor returning to the storage tanks than the volume of liquid dispensed. This "excess vapor" must then be treated or processed before being emitted to the atmosphere. The advantage of the vacuum-assist system is the added collection efficiency at the nozzle, but the system does require some type of processor.[17] District incineration is the system in general use at gasoline service stations for eliminating excess vapors.

In the direct incineration system, the gasoline vapor-air mixture is drawn from the automobile fillneck interface and the volume of return vapors equal to the volume of gasoline dispensed is directed back to the underground tank. The excess vapors are exhausted directly to the incineration system where they are oxidized before exiting to the atmosphere (Figure 3-12).

In most cases, the amount of vapors reaching the incineration unit depends on pressure sensors in the underground tank. When the tank pressure rises to a set level, the vapors are allowed to pass to the oxidizing unit where they are incinerated. When the pressure in the underground tank falls below the set level, the path to the incineration unit is closed and the incineration ceases. The spark for these units may be either direct flame or a series of electric relays and spark sources. If a direct flame is used, a supply of pilot light gas is required.

Other processors which have been tested at service stations but have not attained general use are: catalytic incineration adsorption/incineration, refrigeration/adsorption, and compression-refrigeration-condensation systems.

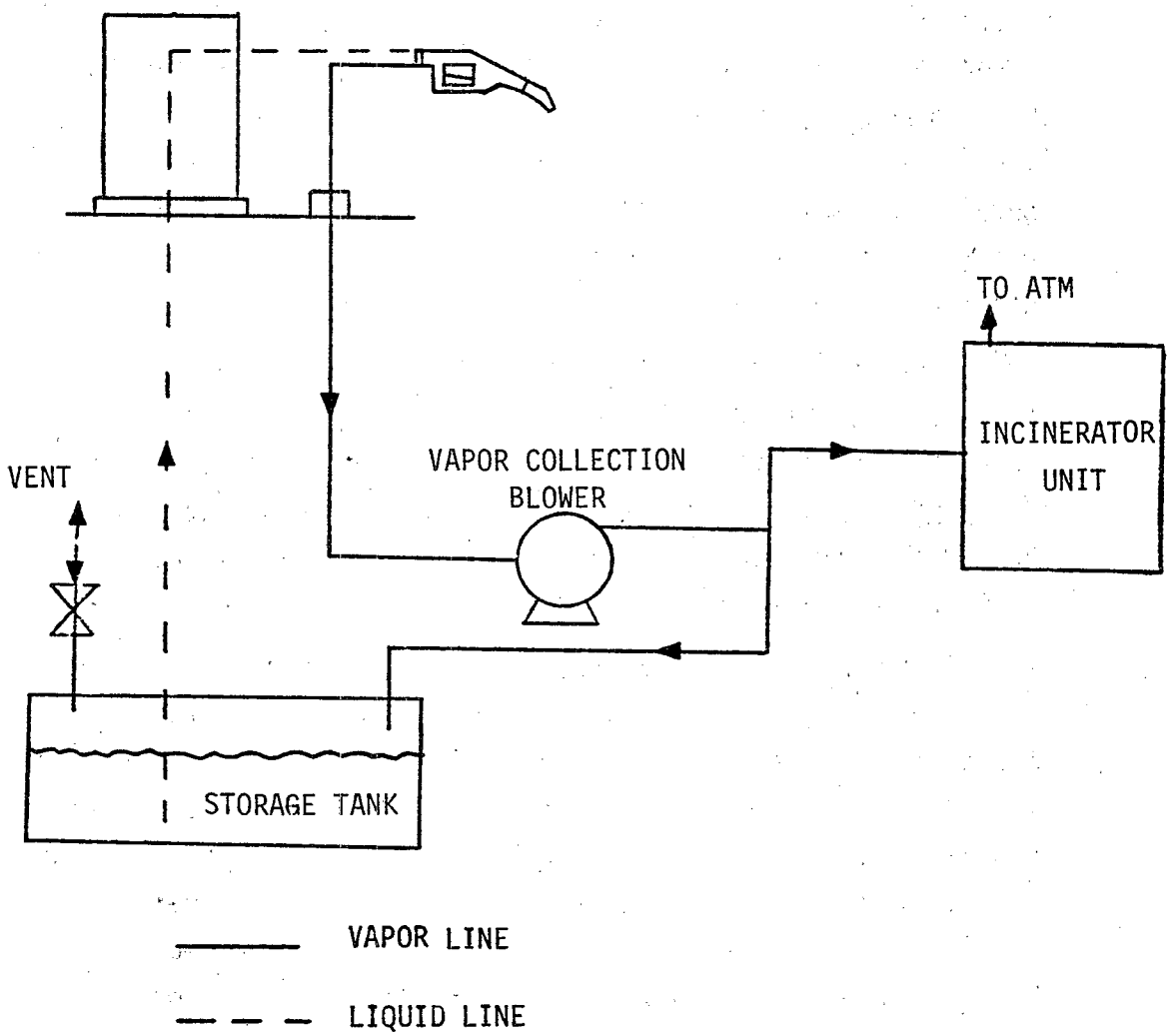

Figure 3-12. Direct Incineration System

3.3.2.3 Hybrid System

The hybrid system is one that shares features of both the vacuum-assist and the vapor balance system.

The hybrid system supplies some slight assistance at the nozzle for vapor collection but does not use a blower and motor. The slight vacuum assistance provided by the hybrid system is by the use of an aspirator. The hybrid system has the advantage over the balance system of the added vapor pickup at the nozzle interface and the advantage over the vacuum-assist system because only a minimal amount of excess air is brought into the system.

The aspirator system currently being employed uses gasoline as the driving force. A proportional amount of the gasoline being dispensed is routed through the aspirator before it is metered and returned to the underground tank. The vapor return line is also routed to the aspirator. The liquid gasoline forced through the aspirator supplies a slight vacuum (0-0.1 in. H_2O) at the nozzle (see Figure 3-13). Since a proportion of the gasoline being dispensed is used in the ejector, the amount of vacuum supplied at the nozzle will vary with the flow of gasoline.[18] This is advantageous to the pure vacuum-assist system which supplies a constant vacuum source regardless of the volume rate of flow of the gasoline. This latter system, in order to provide sufficient vapor capture at the highest gasoline flow rate, will return a higher percentage of excess air at low gasoline pumping rates.

Since both the hybrid system and the vapor balance system draw a very small vacuum, liquids in the vapor return line can cause flow stoppage. For this reason liquid blockage sensors may be required to insure proper vapor flow.[16,18] Under certain conditions, the gasoline going through the aspirator may become sufficiently warm to cause vaporization of the cooler gasoline when it returns to the storage tank.

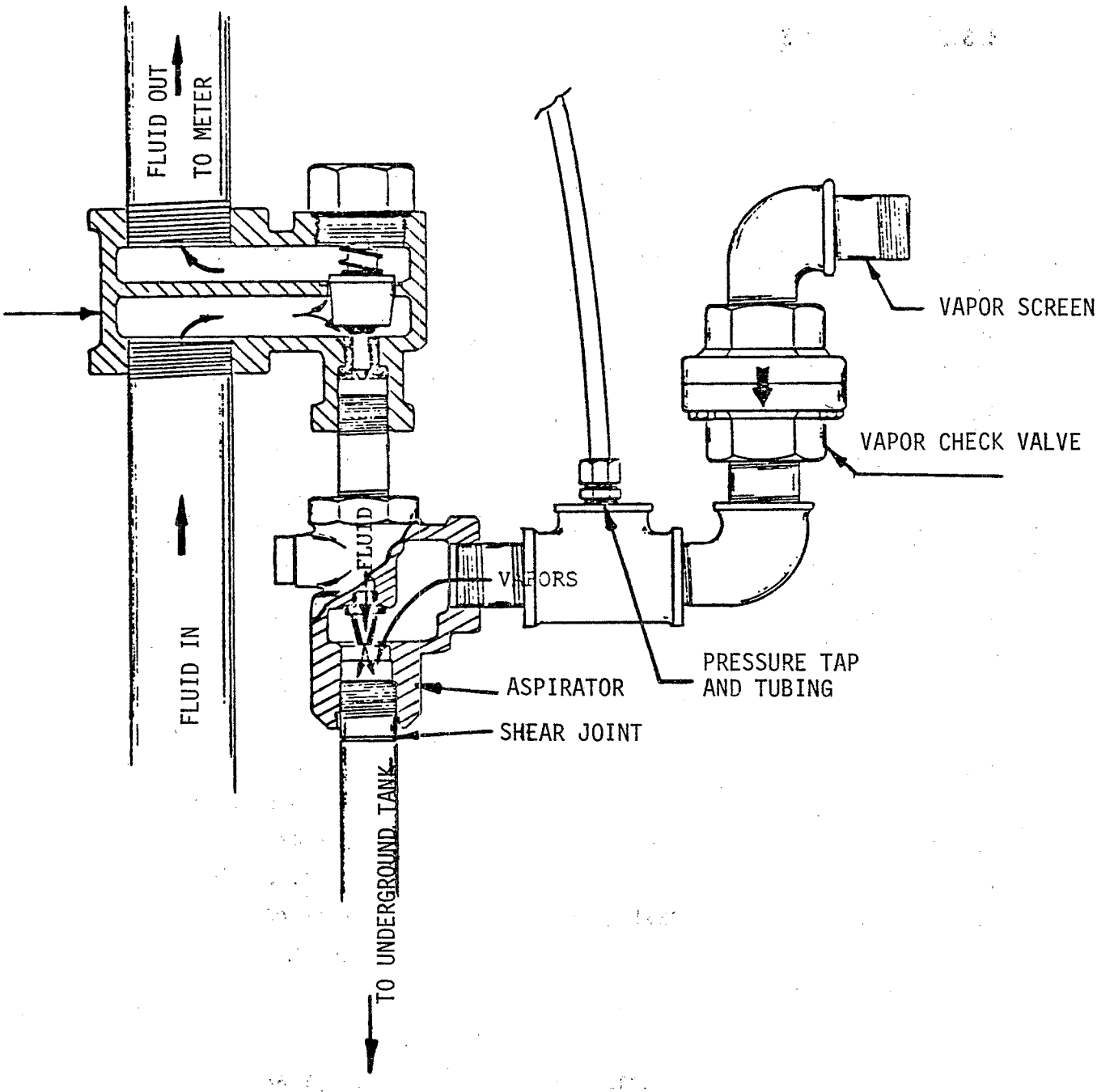

Source: Red Jacket Division of Weil-McLain Co.,Inc., Davenport,Iowa

Figure 3-13. Aspirator-Assist System

Balance system type nozzles are recommended for use with the hybrid system but the "no-seal, no-flow" feature is not a requirement.

3.4 DELIVERY TRUCKS

Delivery trucks are sources of hydrocarbon emissions when they are being loaded or unloaded as well as when they are in transit. Measures which can be taken to reduce emissions while the truck is being filled have already been discussed in relation to the loading rack, both at the terminal and the bulk plant.

Emissions from unloading a transport are effectively and easily controlled by the use of a balance system. (The operation of the balance system has been described in the sections on bulk plants and on service stations.)

While the truck is in transit, product vapors could be lost through leaks in the tank, around fittings, and particularly around the dome and dome vents. In an effort to insure that truck tanks are vaportight, the State of California has established tank performance standards and compliance test procedures. These tank performance standards have been set such that there is a minimum amount of leakage from or into the vapor space at a given maximum pressure or vacuum setting. Such leak-rate criteria minimize breathing losses during the transportation of the gasoline.

REFERENCES FOR SECTION 3.0

1. Radian Corp., A Study of Vapor Control Measures for Gasoline Marketing Operations, Austin, Texas, EPA-450/3-75-046-a, April 1975

2. U.S. EPA, Air Pollution Engineering Manual, 2nd. ed. AP-40, N.C., May 1973

3. U.S. EPA, Compilation of Air Pollutant Emission Factors, Supplement No. 7, April 1977

4. Mowbray, G., Ameron Process Systems Division, Santa Ana, Calif.

5. Soni, A., Dresser Industries, Inc., Long Beach, Calif.

6. Hirsch, R., Fallon Engineering Co. Sun Valley, Calif., (Representative for Edwards Engineering Corp., Pompton Plains, N.J.)

7. Gardner, F.H., Tenney Engineering Inc., Union, N.J.

8. Bryan, R.J., et al., Study of Gasoline Vapor Emissions Controls at Small Bulk Plants, PES, EPA Contract No. 68-01-3156, Task 15, October 1976

9. Bryan, R.J., Yamada, M.M., and Norton, R.L., Effect of Stage I Vapor Recovery Regulations on Small Bulk Plants and on Air Quality in the Washington, D.C., Baltimore, Md., and Houston/Galveston, Tex. Areas, PES, EPA Contract No. 68-01-3156, Task 28, March 1977

10. Bryan, R.J., et al., Evaluation of Top-Loading, Vapor Balance Systems for Small Bulk Plants, PES, EPA Contract No. 68-01-4140, Task 9, April 1977

11. Arnold, C., EMCO Wheaton, Inc., Conneaut, Ohio and R. H. Alexander in Los Angeles, Calif.

12. Carl, R.C., Dover Corp., OPW Division, Cincinnati, Ohio

13. Cortis, B., FMC Corporation, Brea, Calif.

14. Deleval Turbin, Inc., Wiggins Connectors Division, Calif.

15. Burgat, R., Scitech Corp. (Parker Hannifin), Santa Ana, Calif.

16. Perry, F., and Simeroth, D., California Air Resources Board, Sacramento, Calif.

17. Bryan, R.J., Wayne, L.G., Norton, R.L., Reliability Study of Vapor Recovery Systems at Service Stations, PES, EPA-450/3-76-001, March 1976

18. Hiller, T., Red Jacket Division of Weil-McLain Company,Inc., Davenport, Iowa

4.0 REVIEW OF CONTROL STRATEGIES AT TERMINALS

4.1 SAFETY REQUIREMENTS

A convincing series of tests conducted in 1923, in the presence of representatives of petroleum and insurance companies, was largely responsible for the initial acceptance of the floating roof tank as a safe and economical means of storing volatile liquids.[1] The operation and effectiveness of floating roofs with respect to control of hydrocarbon emissions have improved vastly since 1923. Also, floating roofs are considered to provide excellent fire protection and lightning safety.

However, as with any operating structure, dependable, trouble-free service is available only within certain operating limits. When liquid in the tank is withdrawn to a level below the minimum position of the floating roof, the roof becomes supported in a fixed position by its legs. Consequently, any space between the liquid level and the bottom of the floating roof reacts to product movements and temperature changes similar to a fixed-roof tank. When liquid is pumped into the tank, the air and vapor mixture present under the floating roof will be vented until the roof again floats.

During this operation, any air-vapor mixture within the flammable range is vulnerable to ignition. Thus, liquid levels should not be lowered below the floating position of the roof for optimal operations. The air-vapor mixture above the floating roof is quickly dissipated in open-top tanks but can linger on for a short period in covered floating roof tanks. For these internal floaters, adequate ventilation of the space above the floating roof is required to dissipate gasoline vapor as fast as possible.

A potential safety problem in tanks with internal flexible diaphragms has been leakage, which can result in an explosive mixture in the air space above the diaphragm. Regularly maintained and inspected diaphragms should pose no safety problem.

Pipelines connecting the loading racks to the vapor recovery equipment range in length from 100 to 1,600 feet, and up to 12 inches in diameter.[2] As a safety measure, the gasoline vapors from loading racks, after passing through a flame arrestor, can pass through a saturator where they are sprayed with fuel to insure that the hydrocarbon concentration of the vapors is above the explosive level.

Safety has been an important factor in designing vapor recovery equipment. Potential safety problems exist whenever hydrocarbon mixtures are being stored and processed. To eliminate the possibility of explosion, many vapor recovery units are equipped with saturators.

CRA and CRC systems compress hydrocarbon vapors. The adiabatic heat of compression increases the outlet gas temperature to the point where it is much more easily ignited than are the cooler inlet vapors. Compression ratios and the corresponding outlet gas temperatures must be maintained at levels low enough to prevent excessive heating and spontaneous combustion.

Because the vapor recovery units are largely custom made, none of them have obtained Underwriters Laboratory (UL) approval. The majority of the systems, however, do conform to Class I, Group D, Division 1 of the National Electric Codes (NEC) and also comply with all other applicable engineering codes and standards.[2-8]

4.2 EFFICIENCIES

The efficiency of floating covers is dependent on the condition of the storage tank and its sliding seals. Using API equations,[9] it was estimated that floating roofs can reduce emissions by about 93 to 95 percent; but recent floating roof tank emission tests show efficiencies of about 97 percent for a tank with a commercially

fitting foam seal and about 99 percent for a tank with a metallic shoe-type seal.[10] Results from the same test show that adding secondary seals increases the efficiency of foam seals to 99.6 percent and metallic shoe-type seals to 99.8 percent.[1,11] The typical control efficiency of a retrofitted fixed-roof tank with an internal floating roof is 95 percent or more.

Hydrocarbon losses from variable vapor-space tanks are negligible. Because variable vapor-space tanks and the manifolded fixed-roof tanks are sealed from the atmosphere, there are virtually no direct tankage emissions. When the vapor saver is full, the vapors are sent to a vapor recovery processing unit. Overall vapor recovery efficiency in this system is dependent on the efficiency of the processing unit.

The vapor collection efficiency of bottom-loading equipment may approach 100 percent if there are no leaks in the truck. When properly operating, the system remains sealed throughout the loading operation. Dry break couplings are used on the gasoline dispensing line and check valves are used on the vapor return lines to minimize spills and vapor escape during hookups and disconnects.

The vapor collection efficiency is lower for top loaders which require opening the hatch for insertion and removal of the top-loading nozzle. There are also losses due to spills as the loading arm is raised from the truck. Top loaders which have been modified to accommodate vapor recovery systems and do not require hatch opening would have vapor collection efficiencies equivalent to bottom-loading trucks.

CRA, CRC, and refrigeration vapor recovery systems reduce the hydrocarbon concentration in their inlet gas to a relatively constant value in their exhaust. Control efficiencies are then dependent on the inlet hydrocarbon concentration. Current CRA systems

have a recovery efficiency of greater than 90 percent for inlet hydrocarbon concentrations of greater than 20 percent by volume.[7-9] Field tests at Exxon Company's Philadelphia Terminal gave an average recovery efficiency of 70.9 percent on a mass basis for a CRA system. The low recoveries were attributed to having no balance system at the gasoline drop and cold ambient conditions. Both factors would tend to lower the hydrocarbon concentration in the tank ullage. For these tests, the hydrocarbon emissions from the processor averaged 4.0 percent by volume as propane (0.08 gm HC/liter) and was relatively consistent.[12] Subsequent tests in Denver showed the hydrocarbon concentration in the vent stream of a CRA unit to be within 3.1 and 4.0 percent by volume as propane (0.06 to 0.078 gm HC/liter).[13]

Current CRC systems have a recovery efficiency greater than 90 percent.[4,5] It is expected that the hydrocarbon concentration in the vent stream is similar to those encountered with the CRA and refrigeration systems.

Current refrigeration systems have a recovery efficiency of 93 to 97 percent.[2,7] Field tests at Exxon's Baytown Terminal have shown recovery efficiencies ranging from 70.8 to 90.0 percent with an average recovery efficiency of about 84.4 percent for their refrigeration system.[14] There were two factors that had an effect on the refrigeration system in the aforementioned case. First, the condenser was operating at a temperature higher than design and normal operation. Secondly, the incoming vapors were probably less than saturated with hydrocarbons. These and other tests have shown that the vent stream from the refrigeration unit contained 1.8 to 5.4 percent propane by volume (0.035 to 0.106 gm HC/liter air).[1,4,15]

The efficiency of the direct incineration system is dependent upon proper unit design and periodic maintenance. Efficiencies have been reported near 99 percent, with less than 55 ppm hydrocarbon in the stack gas.[16]

All the vapor recovery systems need periodical inspection to maintain design specifications and safety. Vapor balance systems need careful operation to minimize the leaks.

4.3 COSTS

4.3.1 CAPITAL COSTS

Table 4-1 shows the purchase cost of a storage tank 27 meters in diameter, 15 meters in height, with a capacity of 7,950,000 liters (90 ft diameter, 48 ft height, 50,000 bbl). To estimate the overall cost of installing a tank, excavation, foundation, electrical grounding, piping, and painting costs have to be added to these costs.

Table 4-2 provides estimates of installed cost for installation of an internal floating roof in an existing fixed-roof tank with a diameter of 27 meters (90 ft) and a capacity of 7,950,000 liters (50,000 bbl).

Table 4-1. SUMMARY OF STORAGE TANK COSTS[a]

Fixed roof	$150,000 - $191,000
Pontoon floating roof	200,000 - 239,000
Double-deck floating roof	250,000 - 300,000
Weathermaster or covered floating roof	200,000 - 244,000

[a] Basis: 50,000 bbl storage tank, 90 ft dia. x 48 ft ht.

[b] Sources: Reference 1, and Graver Tank and Manufacturing Co. in bibliography under "Manufacturers."

Table 4-2. COST OF RETROFITTING AN EXISTING FIXED-ROOF TANK WITH AN INTERNAL FLOATING ROOF[a]

Steel pan	$50,000 - $60,000
Aluminum	18,000 - 21,000

[a] Basis: 27 m (90 ft) dia. floater

[b] Sources: Reference 1, and Graver Tank Manufacturing Co. and Ultraflote Corp. in bibliography under "Manufacturers."

FOB costs for 4 inch top-loading vapor collection arm assemblies including nozzles, range from $3,200 to $4,000.[6,17]

FOB costs for bottom-loading vapor collection equipment range from $1,600 to $3,200, depending on whether simple flexible hoses or complex counterbalance loading arms are employed.[6,17] The aforementioned costs do not include costs for vapor return lines which are about $360 per 20 feet installed.

A 950,000 liter/day (250,000 gpd) gasoline terminal will usually have two loading racks with three loading arms each, for a total of six loading arms. The cost of equipping such a terminal with top-loading vapor collection arms would be $19,000 to $24,000 and with bottom-loading vapor collection assemblies would be $9,600 to $19,000.

For estimating costs of CRA and CRC vapor recovery systems it has been assumed that a terminal with a throughput capacity of 950,000 liter/day (250,000 gpd) will require 2,500 to 4,250 liter/min (90 to 150 cfm) vapor recovery unit. The FOB cost of such a CRA unit for a typical plant is about $105,000. Required vapor holder for this system costs about $18,000.[8] Site preparation, ancillary equipment, and installation costs are about $30,000.[18]

The FOB cost for a 150 cfm CRC unit is about $130,000. Additionally a vapor holder for this system costs $18,000 and site preparation and installation costs about $25,000.[4] Another kind of CRC unit which can be used for this size of terminal and does not need a vapor holder costs about $180,000. Installation costs for the latter system are about $40,000.[5]

The refrigeration vapor recovery unit recommended by the manufacturers for a 950,000 liter/day (250,000 gpd) bottom-loading terminal is capable of handling a vapor rate of 1,400 liter/min (370 cfm). This high capacity is required because the system design includes no vapor storage tank. The FOB costs for this unit range

from $87,000 to $107,000.[19] The costs for installation, ancillary equipment, and site preparation are estimated at about $25,000.

The direct incineration unit for a 950,000 liter/day (250,000 gpd) terminal costs about $70,000. Site preparation and installation are estimated at $20,000.

Average capital costs for vapor recovery systems at terminals with different gasoline throughputs are given in Table 4-3.

4.3.2 ANNUALIZED COSTS AND COST-EFFECTIVENESS

The only operating cost for storage tank controls is maintenance. Annual maintenance costs for floating roof tanks range from 3 to 3.5 percent of its capital cost.[21]

Annual maintenance costs for incineration and vapor recovery systems range from 2 to 6 percent of capital costs. Power requirements for vapor recovery systems range from 250 to 370 kWh per day.[16]

A credit of $0.10/liter ($0.40/gal) of gasoline recovered is assumed for vapor recovery systems. If the trucks are not vapor balanced prior to loading, vapor control (i.e., vapor recovery or incineration) results in 520 mg hydrocarbon controlled per liter of gasoline loaded.[22] In calculating annualized costs, a 10-year economic life for equipment is assumed and a 10 percent interest rate. Taxes, insurance, and corporate overhead are estimated at 4 percent of the capital cost.[22] Annualized costs for the 950,000 liter/day (250,000 gal/day) terminal are presented in Table 4-4. Cost-effectiveness (dollars per megagram of hydrocarbon) is also provided in Table 4-4.

4.4 ENERGY AND ENVIRONMENTAL IMPACTS

Vapor recovery systems (CRA, CRC, refrigeration) at 950,000 liters per day (250,000 gpd) terminals use from 250 to 370 kWh per day of power.[16] Assuming 33 percent efficiency for electric

Table 4-3. COSTS OF VAPOR CONTROL SYSTEMS FOR EXISTING TERMINALS[a]

System	Throughput (gal/day)	Unit Cost FOB ($)	Total Installation Cost ($)
CRA[b]	250,000	125,000	70,000
	500,000	155,000	N/A
	750,000	170,000	N/A
CRC	250,000	150,000[b] - 180,000	90,000 - 105,000
	500,000	165,000 - 192,000	N/A - 110,000
	750,000	195,000 - N/A	N/A - N/A
Refrigeration	250,000	87,000 - 107,000[c]	80,000
	500,000	134,000 - 156,000[c]	110,000
	750,000	151,000 - 183,000[c]	130,000
Incineration	250,000	70,000	70,000

[a] References 2, 4, 5, and 8

[b] Includes vapor holder

[c] Ranges are for pressurized and total explosion proof units, respectively

N/A = not available

Table 4-4. ANNUALIZED CONTROL COST ESTIMATES FOR MODEL EXISTING TERMINALS

950,000 liters/day terminal[a] (Two rack positions and three products per rack)			
Rack Design	Top-Submerged or Bottom Fill		
Control System	Refrigeration	CRA	Oxidizer
Installed capital cost ($000)[b]	180	200	140
Direct operating cost ($000/yr):			
Utilities (elec.@$0.04/KWh)	6.0	3.9	3.2
Maintenance	5.3	5.8	2.8
Capital charges ($000/yr)	36.0	40.0	28.0
Gasoline (credit) ($000/yr)[c]	(21.4)	(21.4)	0
Net annualized cost (credit) ($000/yr)	25.9	28.3	34.0
Controlled emissions (Mg/yr)[d]	150	150	150
Emission reduction (percent)	87	87	87
Cost (credit) per Mg of HC[e] controlled ($/Mg)	170	190	230

[a] Average gasoline loaded daily.

[b] Does not include truck or storage tank modification costs

[c] Assume truck is not vapor saturated. If vapor balance is used at the gasoline delivery point, recovery can be increased substantially.

[d] 1 Mg = 1,000 kg = 2,205 pounds.

[e] Cost-effectiveness; i.e., net annualized cost ÷ emissions controlled.

power generation, the energy expended for operating the vapor recovery systems would be between 27×10^9 and 4.0×10^9 joules per day (26×10^6 and 3.8×10^6 Btu/day). Taking the heating value of gasoline as 11,500 cal/gm (20,500 Btu/lb), the equivalent amount of gasoline expended daily to provide the electric power would be 95 to 135 liters (25 to 36 gal).

Other than for air, environmental impacts due to the control of hydrocarbon emissions at terminals are negligible. Use of vapor recovery or incineration can reduce hydrocarbon emissions by 520 mg/liter of gasoline loaded.[22] Daily reduction for a typical terminal would be 490 kg (1,090 lb) per day. For vapor recovery systems this would result in the potential recovery of 800 liters (210 gal) per day of gasoline.

REFERENCES FOR SECTION 4.0

1. Moriss, B., Chicago Bridge and Iron Company, Oak Brook, Ill.

2. Hirsch, R., Fallon Engineering Co., Sun Valley. Calif., and Edwards Engineering Corp., Pompton Plains, N.J.

3. Creiph, L., Altech Industries, Inc., Allentown, Pa.

4. Mowbray, G., Ameron Process Systems Division, Santa Ana, Calif.

5. Soni, A., Dresser Industries, Inc., Long Beach, Calif.

6. Burgat, R., Scitech Corp. (Parker Hannifin), Santa Ana, Calif.

7. Gardner, F. H., Tenney Engineering, Inc., Union, N.J.

8. Sasseen, K., Trico Superior, Inc., Los Angeles, Calif.

9. API Bulletin 2518, February 1962

10. Engineering-Science, Inc., Hydrocarbon Emissions From Floating-Roof Storage Tanks, January 1977

11. Chicago Bridge and Iron News, January and March 1977

12. Geiger, J. H., and Charrington, P. R., Emissions From Gasoline Transfer Operations at Exxon Co., U.S.A., Philadelphia, Pa., Betz Environmental Engineers, Inc. (B.E.E.), Denver, Colorado, for EPA, EMB Report No. 75-GAS-10, September 1975

13. Geiger, J. H., Pasco-Denver Products Gasoline Terminal, Trico-Superior Vapor Control System, B.E.E. for EPA, Project No. 76-GAS-17, September 1976

14. Geiger, J. H., and Charrington, P. R., Emissions From Gasoline Transfer Operations at Exxon Co., U.S.A., Baytown, Tex., B.E.E. for EPA, EMB Report No. 75-GAS-8, September 1975

15. Geiger, J. H., Diamond Shamrock Gasoline Terminal, Edwards Vapor Control System, Denver, Colo., B.E.E. for EPA, Project No. 76-GAS-16, September 1976

16. Radian Corp., A Study of Vapor Control Methods for Gasoline Marketing Operations: Volume 1 - Industry Survey and Control Techniques (EPA-450/3-75-046-a), April 1975

17. Arnold, C. and Alexander, R. H., EMCO Wheaton, Inc., Conneaut, Ohio, and Los Angeles, Calif.

18. Sexton, J., Texaco Inc., White Plains, N.Y., Letter to Pratapas, J., OAQPS/EPA, Durham, N.C., January 19, 1978

19. Price List, Model VC, Edwards Engineering Corporation, May 1977

20. Psyhojos, T., AER Corp., Ramsey, N. J., Letter to Pratapas, J., OAQPS/EPA, Durham, N.C., March 22, 1977

21. Preston, J. E., Chevron, San Francisco, Calif.

22. Control of Hydrocarbons From Tank Truck Gasoline Loading Terminals, EPA-450/2-77-026, October 1977

5.0 REVIEW OF CONTROL STRATEGIES AT BULK PLANTS

5.1 SAFETY REQUIREMENTS

As a general rule, the more complex a vapor recovery system is, the higher the risk of an accident. Since accidents involving gasoline and gasoline vapors can be very serious, the risk of an accident must be minimized. Although all secondary systems (refrigeration, adsorption) can be made safe, the safety and reliability of the first vapor recovery systems in service stations and bulk plants were poor. Currently, secondary systems are not required and are not expected to be used to any extent at bulk plants because satisfactory and cost-effective emission control is being provided by submerged fill and vapor balance systems.

The latter systems require the usual general care taken when handling flammable and explosive vapors.

5.2 EFFICIENCIES

5.2.1 SUBMERGED FILL

Submerged filling of tank trucks can reduce vapor loss by 57 percent when compared to splash loading.[1] Similar reductions in emissions may be obtained when comparing splash-loaded versus submerged fill underground storage tanks. For a typical bulk plant converting from splash to submerged fill, loading of trucks can reduce hydrocarbon emissions from 27 kg/day (58 lb/day) to 11 kg/day (25 lb/day) as shown in Table 2-8.

5.2.2 VAPOR BALANCE SYSTEM

The balance system has proven to be effective in bulk plant applications for both the delivery of gasoline to the bulk plant

and for loading the account truck. In both applications, hydrocarbon emissions can be decreased by over 90 percent. Proper maintenance of the storage and truck tanks and pipelines and insuring that proper connections are made are necessary for attaining high efficiencies.

5.3 COSTS

The costs of hydrocarbon control systems are reviewed in the sequential order in which gasoline is received and then transferred from bulk plants: (1) incoming transfer, (2) storage, and (3) outgoing transfer.

5.3.1 CAPITAL COSTS

5.3.1.1 Incoming Transfer Control Costs

5.3.1.1.1 Submerged Fill

Application of the submerged fill technique does not require modifying aboveground storage tanks. Underground tanks require a "drop tube" with the discharge opening not more than 15 cm (6 in.) from the tank bottom. Typical hardware costs (i.e., for a submerged filling tube, OPW 61-T) are $25, and installation is generally simple for tanks utilized at bulk plants.

Submerged fill modifications thus add very little to the overall emission control costs.

5.3.1.1.2 Balance System

Capital costs for balance systems include hardware and installation. Typical hardware for aboveground tanks includes piping, fittings, supports, pressure-vacuum (PV) valves, liquid traps, paint, disconnects, seals, and gaskets. Typical installation work includes draining the tank, assembling piping and

supports, breaking into the existing tank top or vent, painting, leak testing, replacing PV valve, replacing seals, and occasionally repairing leaks by welding tanks or covers. The cost of installing a balance system on an underground tank is generally lower than the installation on an aboveground tank. If a typical bulk plant (aboveground storage tank) is used as a base, the average installation cost (derived from major oil companies, contractors, and operators) is from $3,900 to $5,000 per bulk plant.[2] The overall range was $250 to $13,500, with only one estimate over $9,100.[2,3] Installation costs are summarized in Table 5-1.

Table 5-1. OVERVIEW OF INSTALLED CAPITAL COSTS FOR VAPOR BALANCE SYSTEMS FOR BULK PLANTS[a]

	Average Cost	Range
Incoming transfers		
Balance system	$6,500	$250-13,500
Outgoing transfers		
Balance system		
Top loading	3,600	1,600- 5,000
Bottom loading	12,300	4,100-15,000

[a] References 3, 5

5.3.1.2 Storage Loss Control Costs

5.3.1.2.1 Underground Tanks

The purchase price for each underground tank is in the order of $3,000.[2] The overall cost of underground tanks depends on the number of tanks and the amount of earthwork, concrete

work, and plumbing required. A number of plants have simultaneously relocated tanks underground and installed vapor recovery systems for $20,000 to $40,000, depending on the number of tanks.

5.3.1.2.2 Increasing the Set Point of Storage Tank PV Value

The price of PV valves (OPW 95-UT, for example) is typically a few hundred dollars, and the installation is relatively simple.[4] The total cost of implementing this system, however, depends on other testing and potential modifications required on the storage tanks. These include nondestructive, proof and leak testing, manual venting capability, seals, gaskets and welding required, grounding, instrumentation, and pump changes. Costs can be expected to vary widely.

5.3.1.3 Outgoing Transfer Control Costs

5.3.1.3.1 Submerged Fill for Top Loading

A typical bulk plant with top-loading capability requires only a drop tube to obtain submerged fill. Initial costs are thus minor (for a short length of hose or pipe, and coupling). Operating costs depend on whether or not the drop tube is permanently attached to the loading arm. If the attached drop tube will not clear an account truck, it must be assembled and dismantled for each loading. However, this added labor cost appears to be minor.

5.3.1.3.2 Balance System

Estimated installation costs for complete vapor-balance and bottom-loading systems for incoming and outgoing loads range from $4,100 to $15,000. Average cost is $12,300.[3] The aforementioned costs include conversion from top-loading to bottom-loading. However, they do not include costs for many older plants at which complete replacement of the loading rack (buried piping, meters,

fittings, pumps, electrical controls, and interlocks) may be required.

The cost of vapor balance equipment for top-loading installations ranges from $1,600 to $5,000 with an average cost of $3,600.[3] Costs would escalate to $40,000 if renovation of the loading rack is included.[6] Today, there is a trend toward converting outgoing trucks to bottom-loading. The reasons given by bulk plant operators were faster loading, safety, and integration with customer and supplier vapor recovery equipment.

The costs for vapor balance do not correlate strongly with plant throughput or size, but certain factors have become apparent. Age of the facility generally increases modification costs. Tanks would normally be aboveground for older plants and require longer vapor transfer lines. These older tanks may also require sealing of leaks to permit installation of pipes and fittings required for vapor conservation systems. More modification and modernization would probably also be required at the truck loading and unloading racks, leading to higher costs for old bulk plants.

5.3.2 OPERATION AND MAINTENANCE COSTS

Since only a few bulk operators have had long-term experience with vapor recovery systems, cost information is limited. Maintenance costs for vapor balance and bottom loading are generally expected to be small. Transfer hoses and mating fittings will require replacement. Installation of automatic controls for loading and unloading of gasoline may impose additional maintenance requirements. No direct information on operating costs was available.

5.3.3 SOURCES AND VARIABILITY OF COST DATA FOR VAPOR BALANCE SYSTEMS

Cost estimates originated from permit applications recorded in the Colorado Air Pollution Control Division in October 1977. These estimates were considered in comparison with a nationwide survey of bulk plants conducted in December 1976, and the cost of converting a truck to bottom-loading ($2,500) was derived from this survey.[7] The most salient feature of all bulk plant cost information is its extreme variability. Both the permit application data and the survey data showed wide ranges for the same cost item. Related to this variability is the fact that particular applications were seldom comparable in the costs of installation and hardware. Consequently, in both the survey and the permit application data, averages were used which cover a wide range of technical situations and it should be expected that any given application of a vapor balance system may vary considerably from these averages.

5.3.4 ANNUALIZED COSTS AND COST-EFFECTIVENESS

Annual operation and maintenance costs of the control systems were assumed to be 3 percent of the installed capital cost. The capital charge factor was obtained from the EPA Guidelines Document[5] and a gasoline credit of $0.10/liter was assumed for the hydrocarbons controlled during the outgoing transfer of gasoline. Annualized costs and cost-effectiveness for a typical 19,000 liters (5,000 gal) per day bulk plant are given in Table 5-2.

5.4 ENERGY AND ENVIRONMENTAL IMPACTS

Energy impacts are minimal since neither submerged fill or vapor balance systems consume energy. Also, no deleterious environmental impacts are foreseeable with these systems.

Table 5-2. ESTIMATES OF ANNUALIZED COSTS AND COST-EFFECTIVENESS FOR A TYPICAL BULK PLANT

	Top-Loading Balance System	Bottom-Loading Balance System
Installed capital cost[a] ($)	10,100	18,800
Operation and maintenance cost[b] ($/yr)	300	560
Capital charges[c] ($/yr)	1,730	3,210
Gasoline credit[d] ($/yr)	(810)	(810)
Net cost ($/yr)	1,150	2,890
Controlled emissions[e] (kg/yr)	12,800	12,800
Credited emissions[d] (kg/yr)	5,400	5,400
Cost per kg of HC controlled ($/kg)	0.09	0.23

[a] Table 5-1, incoming and outgoing transfers

[b] Assume 3 percent of capital cost

[c] Use factor from Reference 5

[d] Control of outgoing transfer credited at $0.10/liter. Gasoline density 0.67 kg/liter

[e] Emission factors on Table 2-8. For trucks, use 50 percent splash and 50 percent submerged filling for typical plant. Controlled plant uses breathing and balanced.

Hydrocarbon emission reductions for a 19,000 liter (5,000 gal) per day bulk plant can amount to 45 kg (100 lb) per day assuming the use of submerged filling of tanks and vapor balance for both incoming and outgoing transfers of gasoline. An annual emission reduction of approximately 11.5 metric tons of hydrocarbons would be possible for a typical sized plant with no balance system and 50 percent submerged fill of trucks.

REFERENCES FOR SECTION 5.0

1. Burklin, C.E., and Honerkamp, R.L., Revision of Evaporative Hydrocarbon Emission Factors, Radian Corp., for U.S.EPA-450/3-76-039, North Carolina, August 1976

2. Bryan, R.J., et al., Study of Gasoline Vapor Emission Controls at Small Bulk Plants, PES, EPA Contract No. 68-01-3156, Task 15, October 1976

3. U.S. EPA, OAQPS, CPB, 1978

4. Delaval Turbine, Inc., Wiggins Connectors Division, Calif.

5. Control of Volatile Organic Emissions from Bulk Gasoline Plants, EPA-450/2-77-035, OAQPS Guideline No. 1.2-085, pp. 4-1 through 4-11, December 1977

6. Bryan, R.J., et al., Evaluation of Top-Loading Vapor Balance Systems for Small Bulk Plants, PES, EPA Contract No. 68-01-4140, Task 9, April 1977

7. Study of Gasoline Vapor Emission Controls, Contract No. 68-01-3156, Task Order 15, U.S. EPA, Region VIII, PES,December 1976, pp. 2-1, and Economic Analysis of Vapor Recovery Systems on Small Bulk Plants, U.S. EPA, DSSE, Contract No. 68-01-3156, Task Order No. 24, September 1976, pp.4-3

6.0 REVIEW OF CONTROL STRATEGIES AT SERVICE STATIONS

6.1 SAFETY REQUIREMENTS

Fire safety is a major concern of any system installed at a gasoline service station because of the possible presence of flammable hydrocarbon vapor air mixtures. Much has been written on the safety hazards and necessary precautions that must be followed to avoid accidental fires or explosions.[1-8]

Regulations have been proposed by the National Fire Protection Association (NFPA), the National Institute for Occupational Safety and Health (NIOSH), and the State of California Fire Marshal's office which cover safety precautions for underground tank vents, nozzles, vapor return lines, and vapor processing units and are discussed in this section.[8-10]

The use of restrictors or pressure-vacuum vents on the underground tank vent lines less than 2 inches in diameter is allowed only if the back pressure provided is not greater than the maximum working pressure of the tank. The tank vents should vent vertically at least 12 feet aboveground so that hydrocarbon vapors will not accumulate at ground level or in buildings.[5,8,9]

The use of flame arrestors or automatic fire checks in piping lines where the possibility of flammable mixtures exists has become an important factor in the design and installation of many of these vapor recovery systems. These are required in vapor return lines and around equipment components, such as in-line blowers and vapor processers for vacuum-assist systems. Flame arrestors may also be required on some larger tank vent lines.[9]

The vapor return line should be sloped toward the storage tanks to enable any liquid gasoline which has found its way into the line to drain back to storage. There should be no dropouts

or traps that will accumulate liquids. The vapor return lines and vapor return system should be pressure-tested after installation to insure that the lines were installed properly and vapors do not leak out. Poor installation and the subsequent escape of vapors can cause a severe fire hazard.

Vapor connections on the storage tank and at the nozzle should be closed when not in use to eliminate the loss of vapors from the system. This not only minimizes vapor losses from the vapor system but is especially important in the vacuum-assist processor units that are activated by pressure sensors. The loss of system pressure may cause unnecessary cycling of the processor unit.

The processing units themselves must be positioned so as to minimize the possibility of damage. Curbs, poles, bumper guards, etc., should be installed as safety devices from the possible impact of automobiles. The design of the unit must also include shear and impact valves to eliminate the escape of vapors if damage should occur to the processor.

All safety devices and vapor recovery devices (i.e., nozzles, flame arrestors, processing units, etc.) should be approved by a nationally recognized testing laboratory. The primary complaint of many fire marshals was that although most systems, which were installed several years ago, were comprised of approved components, they had neither been approved as a total system by a nationally recognized testing laboratory nor met many applicable safety codes.[3,7]

6.2 EFFICIENCIES

6.2.1 STAGE I

The balance system has proved very effective as a means of controlling vapors from the filling of the underground storage tanks. They are reported to be usually above 96 percent.[10,11]

6.2.2 STAGE II

The efficiency of a vapor recovery system depends on the equipment selected and its condition. Although no efficiencies of vapor recovery nozzles themselves have been quantified, it has been shown that the amount of pickup of vapors at the nozzle/fillneck interface can vary with the type of nozzle selected.[12,13] This is true more so for the vapor balance system than for the vacuum-assist system. Since poor fit characteristics at the nozzle/fillneck interface are not as critical with the vacuum-assist and hybrid systems, these systems have an advantage at the self-serve station where there is not a trained operator handling the refueling.

The vapor balance system efficiency is very dependent upon the fit at the nozzle/fillneck interface and the condition of the nozzle. Published efficiencies from recent test reports show vapor balance efficiencies range from 60 to 90 percent.[10,11,13-15] The average balance system efficiency reported was 80.1 percent. The San Francisco Bay Area Air Pollution Control District states that their tests show the vapor balance system can obtain an efficiency of 90 percent on automobiles with a good nozzle fit and 82 percent if automobiles with poor fits were included.[14] The implementation of a "no-flow, no-seal" nozzle should readily permit attainment of over 90 percent control for the vapor balance system.

Good fit characteristics are not required with the vacuum-assist systems which are designed to draw in air around the nozzle. Published efficiencies for vacuum-assist systems are generally 90+ percent and average approximately 95 percent.[11,13,16]

For the hybrid system, an efficiency of 95+ percent is indicated.[15]

6.3 COSTS

6.3.1 CAPITAL COSTS

Little data has been published on capital and installation costs of a Stage I balance system alone because the system is normally installed at the same time as Stage II systems and may share some of the piping. The earthwork and asphalt patching is also usually all done at once at the service station. The cost submitted by two contractors for installing Stage I alone, however, was $1,350.

The cost of installing vapor recovery systems at gasoline stations can vary greatly, depending on the station throughput, station layout, and the number of nozzles and pumps. Architectural and engineering services, site work, and other miscellaneous charges should be included when determining cost factors for both Stage I and Stage II emission control systems.

The average capital costs for equipment and installation of balance systems range from $4,300 to $11,600 depending on the size of the service station. Installation costs for the balance system include the installation of liquid blockage sensors with an average cost of $100-$150 per dispenser.[18,19] This cost was included because these sensors are currently being required by the California Air Resources Board and the California Fire Marshal's Office. Table 6-1 shows the range of costs for equipment and installation of balance systems.

The average cost of equipment for vacuum-assist systems also varies with station size. The cost of these systems ranges from $9,800 to $18,900. Table 6-2 indicates the range of costs for the equipment and installation of the vacuum-assist systems.

Table 6-1. COST SUMMARY FOR VAPOR BALANCE SYSTEMS[a]

Number of Dispensers[b]	Average Capital Cost[c]	Range of Costs[d]
2	$4,300	$3,800-5,300
3	4,500	4,000-5,500
6	6,300	5,800-7,300
9	7,900	7,400-8,900
12	9,600	9,100-10,600
15	11,600	11,100-12,600

Source: Unpublished analysis (November 1977) of costs by Economic Analysis Branch/OAQPS/EPA based on data submitted by oil companies, equipment vendors, and state agencies as well as field surveys.

---

[a] Balance systems installed on existing stations with no controls. Includes cost for Stage I.

[b] The relationship used between gasoline throughput and number of dispensers was as follows:

Throughput (1,000 gal/mo)	15	30	60	90	120	180
Number of dispensers	2	3	6	9	12	15

[c] Capital costs include the installation of liquid blockage sensors at an average cost of $100/dispenser.

[d] Average costs reflect manifolded piping. Higher end of range reflects nonmanifolded piping.

Table 6-2. COST SUMMARY FOR VACUUM-ASSIST SYSTEMS[a]

Number of Dispensers[a]	Average Capital Cost[c]	Range of Costs[d]
2	9,800	$7,800-10,800
3	10,500	8,300-11,500
6	12,200	9,700-13,200
9	14,000	11,300-15,000
12	16,300	13,400-17,300
15	18,900	15,800-20,000

Source: Unpublished analysis (November 1977) of costs by Economic Analysis Branch/OAQPS/EPA based on data submitted by oil companies, equipment vendors, and state agencies as well as field surveys.

---

[a] Vacuum assist system with direct incineration unit installed on existing stations with no controls. Costs include manifolded piping and Stage I

[b] The relationship used between gasoline throughput and number of dispensers was as follows:

Throughput (1,000 gal/mo)	15	30	60	90	120	180
Number of dispensers	2	3	6	9	12	15

[c] Average costs include current costs for processing unit and dispenser components.

[d] Range reflects reported estimates of mature costs, which are not yet substantiated.

The hybrid system discussed is basically a vapor balance system with the liquid aspirator equipment added. The additional cost for the equipment puts the hybrid system in the middle between vapor balance systems and vacuum-assisted systems (refer to Table 6-3). This additional cost has been estimated at $200 per pump ($160 for parts, and $40 for installation) over a balance system with independent returns. A summary of the average costs, for comparison, is found in Table 6-4.

6.3.2 OPERATING AND MAINTENANCE COSTS

The operating and maintenance costs for the various systems will be extremely variable depending upon individual station circumstances. Nozzle maintenance will vary between systems because of the complexity of the nozzles. The balance system will require more nozzle maintenance because of the many parts of the "no-seal, no-flow" nozzle, while the vacuum-assist and hybrid systems have less complex nozzles. System maintenance, however, for the balance and hybrid systems will be limited to the blockage sensor device, while the vacuum-assist system will require maintenance of the processing unit and the blower. Furthermore, the vacuum assist will require electrical power for the operation of the blower and processing unit, though this is not expected to be a major cost item. Table 6-5 presents estimates of operating and maintenance costs for the systems using reasonable assumptions for nozzle replacement and repair, system maintenance, and power consumption.

6.3.3 ANNUALIZED COSTS AND COST-EFFECTIVENESS

In calculating annualized costs, 10-year life for the control equipment and 10 percent interest were assumed. Installed costs for Stage I and Stage II controls were obtained from

Table 6-3. COST SUMMARY FOR HYBRID SYSTEMS[a]

Number of Dispensers[b]	Average Capital Cost[c]	Range of Costs
2	$5,200	$4,700-5,900
3	5,600	5,100-6,300
6	8,500	8,000-9,000
9	10,600	10,100-11,300
12	13,200	12,700-13,900
15	16,100	15,600-16,800

Source: Unpublished analysis (November 1977) of costs by Economic Analysis Branch/OAQPS/EPA based on data submitted by oil companies, equipment vendors, and state agencies as well as field surveys.

---

[a] Hybrid system installed on existing station with no controls. Includes cost for Stage I and nonmanifolded piping.

[b] The relationship used between gasoline throughput and number of dispensers was as follows:

Throughput (1,000 gal/mo)	15	30	60	90	120	180
Number of dispensers	2	3	6	9	12	15

[c] Capital costs include liquid blockage sensors at $125 per dispenser and aspirator system at $200 per dispenser ($160 list price and $40 installation).

Table 6-4. AVERAGE CAPITAL COSTS FOR VAPOR RECOVERY SYSTEMS[a]

Number of Dispensers	Vapor Balance System	Vacuum-Assist System	Hybrid System
2	$4,300	$9,800	$5,200
3	4,500	10,500	5,600
6	6,300	12,200	8,500
9	7,900	14,000	10,600
12	9,600	16,300	13,200
15	11,600	18,900	16,100

[a] Refer to Tables 6-1, -2, -3 for relevant information.

Table 6-5. ESTIMATES OF ANNUAL O&M COSTS FOR VAPOR RECOVERY SYSTEMS

Number of Nozzles	Balance	Vacuum-Assist	Hybrid
2	$270	$425	$270
3	330	460	320
6	510	550	450
9	690	650	590
12	870	750	720
15	1,050	840	860

Source: EPA estimates

Table 6-4 and operating and maintenance costs from Table 6-5. A credit of $0.10 per liter ($0.39/gal) of gasoline recovered during refueling (Stage II) was assumed. Service stations were not given credit for hydrocarbon emission controls for vapor-balanced transfer of gasoline to the underground tanks.

Hydrocarbon emissions were calculated using the factors in Table 2-9. Typical facilities were assumed to have 50 percent splash and 50 percent submerged filling of storage tanks.[20] Vehical refueling emissions were reduced 90 percent for the balance system and 95 percent for both the vacuum assist and hybrid system. All of the controlled gasoline was assumed recovered with the balance system, 90 percent with the hybrid system, 50 percent with the vacuum-assist system, with the remaining 50 percent being incinerated.[20] It was assumed that some excess air would be drawn into the hybrid system.

Tables 6-6, -7, and -8 summarize the annualized cost and cost-effectiveness estimated for various size service stations using balance, vacuum-assist, and hybrid control systems, respectively.

6.4 ENERGY AND ENVIRONMENTAL IMPACTS

Based on information provided in Section 2.0 on the potential emissions from service stations and the amount of gasoline which passes through them, the 1977 emissions from all service stations in the United States, if uncontrolled, would be about 830,000 tons of hydrocarbons per year (about 2,300 tons per day). Current estimated emissions are 530,000 tons per year. Thus if vapor recovery systems, which could achieve an overall efficiency of 90 percent were installed on 10 percent of the service stations in the United States, hydrocarbon emissions could be reduced by up to an additional 75,000 tons per year if these stations were uncontrolled. If vapor recovery systems were installed at 30 percent of the typical service stations, 143,000 tons per year of hydrocarbons would be eliminated.

Table 6-6. ANNUALIZED COST ESTIMATES AND COST-EFFECTIVENESS FOR SERVICE STATIONS USING BALANCE SYSTEM

	Number of Nozzles[a]					
	2	3	6	9	12	15
Installed capital cost[a] ($)	4,300	4,500	6,300	7,900	9,600	11,600
Operation and maintenance cost[b] ($/yr)	270	330	510	690	870	1,050
Capital charges[c] ($/yr)	700	735	1,030	1,290	1,565	1,890
Gasoline credit[d] ($/yr)	(100)	(195)	(395)	(590)	(790)	(1,180)
Net cost ($/yr)	870	870	1,145	1,390	1,645	1,760
Emission reduction[e] (%)	85	85	85	85	85	85
Controlled emissions[e] (kg/yr)	1,400	2,810	5,620	8,430	11,240	16,860
Credit to service station[d] (kg/yr)	660	1,320	2,640	3,970	5,290	7,930
Cost per kg of HC controlled[f] ($/kg)	0.62	0.31	0.20	0.16	0.15	0.10

[a] Refer to Table 6-1 for cost and throughput.
[b] Refer to Table 6-5.
[c] Capital charge factor as recommended by EPA March 1978.
[d] Gasoline recovered from vehicle refueling only is credited at $0.10 per liter. Gasoline density of 0.67 kg/liter used.
[e] Refer to Table 2-9. Use 50% submerged and 50% splash for tank filling for baseline (total 2.414 kg/10^3 liter). For controlled add breathing, balanced, spillage, and 10% of vehicle refueling.
[f] Net cost/controlled emissions.

Table 6-7. ANNUALIZED COST ESTIMATES AND COST-EFFECTIVENESS FOR SERVICE STATIONS USING VACUUM-ASSIST SYSTEM

	Number of Nozzles[a]					
	2	3	6	9	12	15
Installed capital cost[a] ($)	9,800	10,500	12,200	14,400	16,300	18,900
Operation and maintenance cost[b] ($/yr)	420	460	550	650	750	840
Capital charges[c] ($/yr)	1,600	1,710	1,990	2,280	2,660	3,080
Gasoline credit[d] ($/yr)	(50)	(100)	(210)	(315)	(420)	(630)
Net cost ($/yr)	1,970	2,070	2,330	2,615	2,990	3,290
Emission reduction[e] (%)	88	88	88	88	88	88
Controlled emissions[e] (kg/yr)	1,450	2,890	5,780	8,670	11,560	17,340
Credit to service station[d] (kg/yr)	350	700	1,400	2,110	2,810	4,210
Cost per kg of HC controlled[f] ($/kg)	1.36	0.72	0.40	0.30	0.26	0.19

[a] Refer to Table 6-2.
[b] Refer to Table 6-5.
[c] Capital charge factor as recommended by EPA, March 1978
[d] Gasoline recovered from vehicle refueling only (50% of controlled emission) is credited at $0.10/liter. Gasoline density of 0.67 kg/liter used.
[e] Refer to Table 2-9. For baseline use 50% splash, 50% submerged tank filling (total 2.414 kg/10^3 liter). For controlled add breathing, balanced, spillage, and 5% of vehicle refueling.
[f] Net cost/controlled emissions.

Table 6-8. ANNUALIZED COST ESTIMATES AND COST-EFFECTIVENESS FOR SERVICE STATIONS USING HYBRID SYSTEMS

	Number of Nozzles					
	2	3	6	9	12	15
Installed capital cost[a] ($)	5,200	5,600	8,500	10,600	13,200	16,100
Operation and maintenance cost[b] ($/yr)	270	320	450	590	720	860
Capital charges[c] ($/yr)	850	915	1,385	1,730	2,150	2,625
Gasoline credit[d] ($/yr)	(95)	(190)	(380)	(565)	(755)	(1,130)
Net cost ($/yr)	1,025	1,045	1,455	1,755	2,115	2,355
Emission reduction[e] (%)	88	88	88	88	88	88
Controlled emission[e] (kg/yr)	1,450	2,890	5,780	8,670	11,560	17,340
Credit to service station[d] (kg/yr)	630	1,260	2,530	3,790	5,050	7,580
Cost per kg of HC controlled[f] ($/kg)	0.71	0.36	0.25	0.20	0.18	0.14

[a] Refer to Table 6-3.

[b] Refer to Table 6-5.

[c] Capital charge factor as recommended by U.S. EPA, March 1978.

[d] Gasoline recovered from vehicle refueling only (90% of controlled emissions) is credited at $0.10 per liter. Gasoline density of 0.67 kg/liter used.

[e] Refer to Table 2-9. For baseline use 50% splash, 50% submerged tank filling (total 2.414 kg/10^3 liter). For controlled add breathing, balanced, spillage, and 5% of vehicle refueling.

[f] Net cost/controlled emissions.

Data available on energy consumption of the processing units used at service stations are very limited. One estimate for a vacuum-assist system with incineration was 1.4 kWh/1,000 gallons throughput.[21] If this system was installed on 10 percent of the typical service stations, approximately 10,000 megawatt hours per year of energy would be consumed with the recovery of 16,000 tons per year of gasoline not including Stage I controls.

Energy consumption by the balance and hybrid systems would be negligible.

REFERENCES FOR SECTION 6.0

1. American Petroleum Institute, "Comments in Response to the EPA's October 9, 1975 Announcement of Proposed Stage II Gasoline Recovery Regulations," Washington, D.C., December 1975

2. Bonine, J.E., "Documentation of Costs of Stage II Vapor Recovery," internal EPA letter to John Haines, July 22, 1975

3. Dodson, H.C., "Resolution of Fire Marshal's Association of Colorado," August 1975

4. Mawn, P.E.,Economic Impact of Stage II Vapor Recovery Regulations: Working Memoranda, Arthur D. Little, EPA-450/3-76-042, November 1976

5. McDonald, T.W., Letter to EPA on Proposed Decision on Gasoline Station Vapor Recovery, Bureau of Fire Prevention, Long Beach, Calif., October 1975

6. National Institute for Occupational Safety (NIOSH), Health and Safety Guide for Service Stations, Dept. of Health, Education and Welfare, Ohio, 1975

7. Noffsinger, W., "Report From San Diego and Other Comments From the Viewpoint of a Fire Marshall," Fire Marshal's Association of Colorado, August 1975

8. National Fire Protection Association (NFPA), Flammable and Combustible Liquids Code, 1976, Boston, Mass.

9. State of California Air Resources Board (CARB), Evaluation of Spitback, Spillage, Weights and Measures, and Fire and Safety Considerations With Regards to the ARB Stage II Vapor Recovery Program, March 1977

10. Battles, R.L., Gasoline Vapor Recovery Performance Tests for Phillips Petroleum Company at Littleton, Colorado, York Research Corp., Colorado, April 1975

11. Hasselman, D.E., Test Evaluation of Gasoline Transfer Vapor Recovery Systems, TRW, EPA 74-GAS-1, November 1974

12. Bryan, Wayne, Norton, Reliability Study of Vapor Recovery Systems at Service Stations, March 1976

13. Scott Environmental Technology, Inc., Evaluation of Test Procedures for Measuring Vehicle Refueling Emissions, APl Publication No. 4276, San Bernardino, Calif., July 1976

14. CARB, Statement of EPA Public Hearing on Vapor Recovery Regulations and Test Procedures, April 14, 1977

15. Scott Environmental Technology, Inc., Performance Evaluation of Red Jacket Vapor Recovery System, Calif., November 1975

16. CARB Letter to EPA, May 24, 1977

17. Weeks, R.L., "Cost Analysis for Gasoline Vapor Recovery System," internal San Diego County letter to Richard J. Sommerville, July 7, 1972

18. Hiller, T., Red Jacket Division of Weil-McLain Company, Inc., Davenport, Iowa

19. Perry F., and Simeroth, D., CARB, Sacramento, Calif.

20. U.S. EPA, OAQPS, CPB, 1978

21. Hasselman, D.E., communications with U.S. EPA.

7.0 ASSESSMENT OF CONTROL STRATEGIES FOR GASOLINE DELIVERY TRUCKS

7.1 SAFETY REQUIREMENTS

Truck operators have expressed concern over the potential hazard posed by a tank filled with vapors, particularly if it is involved in an accident. The upper explosive limit of 6-percent volume gasoline in air will be exceeded by a significant amount when all vapors produced by delivering a load of gasoline are returned to the delivery vehicle through a properly functioning vapor balance system.

7.2 EFFICIENCY

CARB data show that a significant decrease in emissions is possible as the allowable leak rate of vapors from a tank truck is decreased.[1] Subsequent tests and analyses indicate that typical emissions, even at a maximum, would be less than half that assumed by CARB.[2] However, on the basis of CARB's controlled emissions, an emission reduction of 60 to 80 percent appears achievable.

7.3 COSTS

7.3.1 CAPITAL COSTS

Gasoline transports can be operated by commercial carriers as well as by the operators or owners of the terminal. From information obtained from owners and equipment manufacturers and installers, the initial cost of a vapor balance system for these trucks has ranged from $600 to $10,000.

Typical small-account delivery trucks, can be retrofitted with vapor return and bottom-loading equipment for between $600 to $9,900, with an overall average cost of about $4,200.[3] To install only a vapor-return line will cost an average of $2,000 less. This wide range for the modification of trucks is due to

several factors: (1) number of compartments (two to six) per truck, which have to be modified; (2) age of the truck, since substantial modification may be required for old trucks; (3) accessibility of hatch (roll protection devices) may make installation difficult; and (4) tanks of aluminum may be more difficult to work with than tanks made of steel.

7.3.2 COST-EFFECTIVENESS

It has been estimated that it will cost approximately $500 a year to make a delivery tank meet the proposed CARB performance criteria. An estimated 0.55 kg (1.2 lb) of hydrocarbon would be saved each round trip. This is based on a typical loss being 1.0 kg (2.2 lb) per round trip[2] and controlled loss being 0.45 kg (1.0 lb) per round trip.[1] Also, industry representatives have indicated that a delivery tank would make a minimum of 500 round trips per year.[1] This amounts to 275 kg (600 lb) per year of hydrocarbons saved at a cost of $1.80/kg ($0.83/lb) if the cargo tank owner is a contract carrier. If the cargo tank is company-owned, and the value of the returned vapors converted to gasoline are considered, the cost would be approximately $1.67/kg ($0.76/lb) saved based on 90 percent recovery and approximately $0.08/lb value of the saved vapors.

7.4 IMPACTS - CONSERVATION OF GASOLINE

The potential for preventing the loss of gasoline from delivery trucks by making them vaportight is estimated for the country as a whole. There are approximately 1,950 terminals and 20,000 bulk plants. The average daily throughput at a terminal is 950,000 liters (250,000 gal); at a bulk plant, 19,000 liters (5,000 gal). The transports serving terminals carry an average load of 30,000 liters (8,000 gal), and the small delivery trucks serving bulk plants haul an average load of 7,800 liters (2,000 gal).

Using the figure of 0.45 lb hydrocarbon/10^3 gal potential losses,[2] and 0.2 lb hydrocarbon/10^3 gal (CARB basis) for losses under controlled conditions, emission estimates can be made as shown in Table 7-1.

Table 7-1. ESTIMATED HYDROCARBON SAVINGS AND LOSSES FROM TANK TRUCK TRANSIT UNDER CONTROLLED CONDITIONS

Potential losses	Pounds Hydrocarbons/Day	Gallons Gasoline/Day
Terminals	219,000	43,000
Bulk plants	45,000	9,000
	264,000	52,000
Controlled losses		
Terminal	98,000	19,000
Bulk plants	20,000	4,000
	118,000	23,000
Potential total savings	146,000	29,000

Allowing for 250 working days per year, this means an annual, nationwide potential savings of gasoline losses during transit of 18,300 tons of hydrocarbons or 7,150,000 gallons of gasoline.

Other environmental impacts due to the control of truck emissions would be insignificant. Energy impacts would be minimal. Compressors, pumps, and other equipment would be used during truck testing for leaks.

REFERENCES FOR SECTION 7.0

1. State of California Air Resources Board, "Public Hearing--Certification and Test Procedures for Gasoline Vapor Recovery Systems for Bulk Plants, Terminals, and Delivery Tanks," March 1977

2. R.A. Nichols Engineering, "Tank Truck Leakage Measurements," June 7, 1977 and transmittal letter to H.B. Uhlig, Chevron U.S.A., San Francisco, Calif., June 10, 1977

3. Bryan, R.J. et al., Evaluation of Top-Loading Vapor Balance System for Small Bulk Plants, PES, EPA Contract No. 68-01-4140 Task 9, April 1977

8.0 BIBLIOGRAPHY

The bibliography is divided into several sections according to subject matter contained in the documents. Nonspecific documents are listed under General Information. Manufacturers are listed separately and their products are identified. A listing of additional sources from which useful information can be obtained are also included.

TERMINALS

American Petroleum Institute (API), Recommended Good Practices for Bulk Liquid-Loss Control in Terminals and Depots, API Bulletin 1623, Washington, D.C., June 1972

Fallon Engineering Co., Test Procedure for Gasoline Truck Terminal Vapor Gasoline Equipment and System, Calif., undated (received May 1977)

Foley, M., "Data on Operational Parameters for Bulk Terminal Vapor Recovery Units in San Diego, for Pacific Environmental Systems," San Diego County Air Pollution Control District (APCD), Calif., April 28, 1977

Geiger, J.H., Air Pollution Emission Test, Diamond Shamrock Gasoline Terminal, Edwards Vapor Control System, Denver, Col., Betz Environmental Engineers, Inc. (BEE), for U.S. Environmental Protection Agency, EMB Report No. 76-GAS-16, September 1976

Geiger, J.H., Air Pollution Emission Test, Pasco-Denver Products Gasoline Terminal, Trico-Superior Vapor Control System, Denver, Co., BEE, Plymouth Meeting, Penn. for U.S. EPA EMB Report No. 76-GAS-16, September 1976

Geiger, J.H., Charrington, P.R., Emissions From Gasoline Transfer Operations at Exxon Company, USA, Baytown, Tex., BEE, Plymouth Meeting, Penn. for U.S. EPA, EMB Report No. 75-GAS-8, September 1975

Geiger, J.H., Emissions From Gasoline Transfer Operations at Exxon Co., USA, Philadelphia, Pa., BEE, for U.S. EPA, EMB Report No. 75-GAS-10, September 1975

Nichols, R.A., "Hydrocarbon-Vapor Recovery," Chemical Engineering, March 1973

Sims, A.V., Field Surveillance and Enforcement Guide for Petroleum Refineries, The Ben Holt Company, U.S. EPA, Contract No. 450/3-74-042, July 1974

State of California Air Resources Board (CARB), "Certification and Test Procedures for Vapor Recovery Systems at Gasoline Terminals," April 1977

Umlauf, G.E., Parekh, B., Study of Air Pollution Emission Problems and Controls at Petroleum Refineries, Pacific Environmental Services, Inc. (PES), for U.S. EPA, February 1977

U.S. Environmental Protection Agency, Control of Hydrocarbons From Tank Truck Gasoline Loading Terminals, EPA-450/2-77-026, (OAQPS No. 1.2-082), North Carolina, October 1977

BULK PLANTS

American Petroleum Institute, "Bulk Plant Operation and Delivery of Products," API Accident Prevention Manual No. 8, March 1935

Bay Area Air Pollution Control District (APCD), "Amendments to Regulations 2 and 3 Concerning Bulk Loading Terminals and the Reduction of Emissions Therefrom," San Francisco, Calif., January 29, 1976; Revised February 9, 1976

Bay Area Air Pollution Control District (APCD), Board of Directors Regular Meeting Minutes from October 15, 1975, February 4, 1976, and February 18, 1976

Bay Area Air Pollution Control District (APCD), "Small Bulk Loading Terminals," San Francisco, Calif., October 29, 1975

Bryan, R.J. et al., Compliance Analysis of Small Bulk Plants, Pacific Environmental Services, Inc., EPA Contract No. 68-01-3156, Task No. 17, December 1976

Bryan, R.J. et al., Economic Analysis of Vapor Recovery Systems on Small Bulk Plants, Pacific Environmental Services, Inc., EPA Contract No. 68-01-3156, Task No. 24, September 1976

Bryan, R.J. et al., Evaluation of Top Loading Vapor Balance Systems for Small Bulk Plants, Pacific Environmental Services, Inc., EPA Contract No. 68-01-4140, Task No. 9, April 1977

Bryan, R.J., Yamada, M.M., Norton, R.L., Effects of Stage I Vapor Recovery Regulations on Small Bulk Plants and on Air Quality in The Washington D.C., Baltimore, Md., and Houston/Galveston, Tex. Areas, Pacific Environmental Services, Inc., EPA Contract No. 68-01-3156, Task No. 28, March 1977

Bryan, R.J. et al., Study of Gasoline Vapor Emission Controls at Small Bulk Plants, Pacific Environmental Services, Inc., EPA Contract No. 68-01-3156, Task No. 15, October 1976

Mobray, G., Communications regarding vapor recovery systems for small bulk plants, Ameron Process Systems Division, Calif., June 1976

National Institute for Occupational Safety and Health (NIOSH), Health and Safety Guide for Bulk Petroleum Plants, U.S. DHEW, Ohio, November 1975

Pfarr, R.J., "Bulk Plant Terminals," Statement to Bay Area APCD from operators of nine bulk plants in Contra Costa, Calif., January 1976

Severson, D.E., "Vapor Recovery: Small Bulk Plants," Presentation to the California Air Resources Board, by Standard Oil of Calif., February 1975

State of California Air Resources Board, Information Report: Comparison Between the Air Resources Board and the Environmental Protection Agency Stage I Vapor Recovery Rules, April 1977

CARB, "Certification and Test Procedures for Vapor Recovery Systems at Gasoline Bulk Plant," April 1977

Tuome, J.E., Letter to Mr. F.M. Covington EPA Region IX in response to an amendment in Federal Register 41 No. 44, March 4, 1976 dealing with compliance data for Stage I vapor control regulation of agricultural tanks, 2,000 gallon tanks and small bulk plants, Standard Oil of Calif., April 1976

U.S. Environmental Protection Agency, Control of Volatile Organic Emissions From Bulk Gasoline Plants, EPA-450/2-77-035, OAQPS No. (1.2-085), North Carolina, December 1977

SERVICE STATIONS

American Petroleum Institute, "Comments in Response to the Environmental Protection Agency's October 9, 1975, Announcement of Proposed Stage II Gasoline Vapor Recovery Regulations," Washington, D.C., December 1975

Arthur D. Little, Inc., "Non Service Station Gasoline Dispensing Audit," memo to EPA/OSHA, September 15, 1977

Arthur D. Little, Inc., "Service Station Audit," memo to EPA/OSHA, October 3, 1977

Atlantic Richfield Company, Statement of EPA Proposal of Stage II Vapor Recovery Regulations, Washington, D.C., January 1977

Battles, R.L., Gasoline Vapor Recovery Performance Tests for Phillips Petroleum Company at Littleton, Col., York Research Corp., Col., April 1975

Bay Area Air Pollution Control District, Board of Directors Regular Meeting Minutes, San Francisco, Calif., November 5, 1975; January 21, 1976; February 4, 1976

Bay Area Air Pollution Control District, Statement at the EPA Public Hearing on Vapor Recovery Regulations and Test Procedures, April 14, 1977

Bonine, J.E., "Documentation of Costs of Stage II Vapor Recovery," internal EPA letter to John Haines, July 22, 1975

Bryan, R.J., Trip Report Notes on EPA Stage II, National Hearings, January 5, 1977, Pacific Environmental Services, January 1977

Bryan, R.J., Norton, R., Cost Data Vapor Recovery Systems at Service Stations, Pacific Environmental Services, EPA-450/3-75-085, September 1975

Bryan, R.J., Vapor Recovery Carbon Sampling Program, Pacific Environmental Services, EPA Contract No. 68-02-1405, Task No. 2, January 1977

Bryan, R.J., Wayne, L.G., and Norton, R.L., Reliability Study of Vapor Recovery Systems at Service Stations, Pacific Environmental Services, EPA-450/3-76-001, March 1976

Dodson, H.C., "Resolutions of Fire Marshal's Association of Colorado," August 1975

Fisher, H. Lee, "Status Overview on Vapor Control Programs in San Diego County," for the San Diego County Board of Supervisors, October 1975

Forbes, D.A., Cost Analysis Service Station Emission Controls-Vehicle Refueling, Conoca, Ponca City, Okla., March 5, 1976

Hasselman, D.E., Test Evaluation of Gasoline Transfer Vapor Recovery Systems, TRW, for U.S. EPA, EMB Report No. 74-GAS-1, November 1974

Hasselman & Associates, Presentation to the EPA Hearing Board for Stage II Gasoline Vapor Recovery, Washington, D.C., January 1977

Liston, E.M., Determination of Hydrocarbon Vapor Losses From Vehicle Fuel Tanks During Refueling Using a Leak-Rate Procedure, Stanford Research Institute (SRI), API Dept. CEA-22, June 1975

Liston, E.M., A Study of Variables That Effect the Amount of Vapor Emitted During the Refueling of Automobiles, SRI for API, May 1975

Manos, J.J., Evaluation of Test Procedures for Measuring Vehicle Refueling Emissions, Scott Environmental Technology, Inc., prepared for API, December 1975

Marplan Research, Inc., "A Survey of Service Station Operators and Their Reactions to a Vapor Recovery System" for Exxon Company USA, December 1976

Mawn, P.E., Economic Impact of Stage II Vapor Recovery Regulations: Working Memoranda, Arthur D. Little, Inc., EPA-450/3-76-042, November 1976

McDonald, T.W., Letter to EPA on Proposed Decision on Gasoline Station Vapor Recovery, Bureau of Fire Prevention, Long Beach, California, October 1975

National Institute for Occupational Safety and Health, Health and Safety Guide for Service Stations, DHEW, Ohio, 1975

Noffsinger, W., " 'Report form San Diego' and other Comments from the Viewpoint of a Fire Marshal," Presented to the Quarterly Meeting of the Fire Marshal's Association of Colorado, August 1975

San Diego County APCD, "APCD Comments on Status Overview on Vapor Control Programs in San Diego County," Calif., November 1975

San Diego County APCD, "Operation Procedure OP-1 Bulk Drop" APCD OP-1, Calif., June 1975

Scott Environmental Technology, Inc., Evaluation of Test Procedures for Measuring Vehicle Refueling Emissions, API Publication 4276, Calif., July 1976

Scott Environmental Technology, Inc., Performance of Red Jacket Vapor Recovery System, November 1975

Shell Oil Company, "Reproposal of Amendments to Stage II Vapor Recovery Regulations and Test Procedures," Washington, D.C., January 1977

State of California Air Resources Board, "Certification of the OPW System Y Type 2, Vapor Recovery System for Underground Storage Tanks at Gasoline Service Stations," Executive Order G-70-6, April 26, 1977

CARB, Evaluation of Spitback, Spillage, Weights and Measures and Fire and Safety Considerations With Regard to the ARB Stage II Vapor Recovery Program, March 1977. (Input and discussions from the Department of Food and Agriculture, Division of Measurement Standards; Vapor Balance System Task Force; State Fire Marshal's Office, and the Occupational Safety and Health Standards Board.)

CARB, Letter to U.S. Environmental Protection Agency, May 24, 1977

CARB, "Status Report on the California Program for Gasoline Vapor Recovery During Gasoline Marketing Operations," May 26 1977

CARB, "Test Procedures for Determining the Efficiency of Gasoline Vapor Recovery Systems at Service Stations," March 1976

U.S. Department of Commerce, Domestic and International Business Administration, Franchising in the Economy 1975-77

U.S. Environmental Protection Agency, "Stage II Gasoline Vapor Recovery," Federal Register Vol. 40, No. 197, October 1975

U.S. EPA, "Proposal of Stage II Vapor Recovery Regulations and Test Procedures," Federal Register, Vol. 41 No. 211, November 1976 (also Vol.41, No. 231, November 1976)

U.S. EPA, Office of Enforcement, "Interim Report on the Stage II Vapor Recovery Short Test," December 30, 1976

U.S. EPA, Office of Enforcement, "Vehicle Sampling for Stage II Vapor Recovery," December 1976

U.S. EPA, Region IX, "Public Hearing on Vapor Recovery Regulations and Test Procedures, Phase II," (with exhibits), San Francisco, April 1977

Venturini, P.D., and Grady, D.M., "Background and Development of the California Vapor Recovery Control Program for Service Stations, CARB, November 1975

Weeks, R.L., "Cost Analysis for Gasoline Vapor Recovery Systems," internal San Diego County letter to Richard J. Sommerville, July 7, 1975

STORAGE TANKS

American Petroleum Institute, Evaporation Loss From Fixed-Roof Tanks, API Bulletin 2518, Washington, D.C., June 1962

API, Evaporation Loss From Floating Roof Tanks, API Bulletin 2517, February 1962

API, Evaporation Loss From Low-Pressure Tanks, API Bulletin 2516, March 1962

API, "Flame Arrestors for Tank Vents," PSD 2210, May 1971

API, Miscellaneous tables and figures on storage tank loss calculations

Ball, D.A., Putnam, A.A., and Luce, R.G., Evaluation of Methods for Measuring and Controlling Hydrocarbon Emissions From Petroleum Storage Tanks, Battelle, Columbus Laboratories, Columbus, Ohio, EPA-450/3-036, November 1976

Chicago Bridge and Iron News, January and March 1977

Engineering-Science, Inc., Hydrocarbon Emissions From Fixed-Roof Petroleum Tanks, prepared for the Western Oil and Gas Sssociation, Calif., July 1977

Engineering-Science, Inc., Hydrocarbon Emissions From Floating Roof Storage Tanks, prepared for the Western Oil and Gas Association, Calif., January 1977

Gammell, D.M., "Blanket Tanks for Gas Control," Hydrocarbon Processing, December 1976

Mobil Oil Corporation, "Floating Roof Tank Evaporative Loss Study," Statement to CARB Workshop, Los Angeles, Calif., December 17, 1976

Peterson, P.R. et al., Evaluation of Hydrocarbon Emissions From Petroleum Liquid Storage, Pacific Environmental Services, Inc., EPA Contract No. 68-02-2606, Work Assignment No. 1, January 1978 (Draft)

Sims, A.V., Inspection Manual for the Enforcement of New Source Performance Standards: Volatile Hydrocarbon Storage, revised by Pacific Environmental Services, Inc., EPA Contract No. 68-01-3156, Task No. 19, October 1976

State of California Air Resources Board, "Public Hearing on the Effective Date of Sealing Requirements for Floating Roof Tanks in Southern Calif. Air Pollution Control District Rule 463," No. 77-2-4, Calif., January 26, 1977

CARB, "Public Hearing on Proposed Amendments to Rule 463 of the Southern Calif. Air Pollution Control District," 76-12-2, Calif., June 25, 1976

CARB, "Public Hearing on Proposed Amendments to the South Coast Air Quality Management District's Rule 463 Pertaining to Floating-Roof Tank Seal Requirements," March 25, 1977

Underwriters Laboratories, Inc., Standards for Safety bulletins: UL 142, "Steel Above-Ground Tanks for Flammable and Combustible Liquids;" UL 525, "Flame Arrestors for use on Vents of Storage Tanks for Petroleum Oil and Gasoline;" UL 58, "Steel Underground Tanks for Flammable and Combustible Liquids;' and UL 842, "Valves for Flammable Fluids."

U.S. EPA, Control of Volatile Organic Emissions From Storage of Petroleum Liquids in Fixed-Roof Tanks, EPA 450/2-77-036 (OAQPS No. 1.2-089), North Carolina, December 1977

Wafelman, H.R., and Buhrmann, H., "Maintain Safer Tank Storage," Hydrocarbon Processing, January 1977

Yun-Chung, Sun, G.R. Killat, "Adsorption for Vapor Control," Hydrocarbon Processing, September 1976

TANKERS

American Petroleum Institute, Bottom Loading and Vapor Recovery for MC-306 Tank Motor Vehicles, API RP 1004, Washington, D.C., September 1975

State of California Air Resources Board, "Certification and Test Procedures for Vapor Recovery Systems of Gasoline Delivery Tanks," April 13, 1977

Truck Trailer Manufacturers Association, "Bottom Loading DOT MC306 Cargo Tanks," TTMA Recommended Practice, Report No. 46-76, March 1976

TTMA, "Leak Testing of Cargo Tank Vapor Recovery Systems," TTMA Recommended Practice, Report No. 50-76, May 1976

TTMA, "Vapor Collection for MC306 Cargo Tanks," TTMA Recommended Practice, Report No. 45-74, June 1974

GENERAL INFORMATION

American Petroleum Institute, Gasoline Marketing, API Publication 1589, Washington, D.C., December 1976

API, Hydrocarbon Emissions From Refineries, API Publication 928, July 1973

API, Manual on Disposal of Refinery Wastes, Volume on Atmospheric Emissions, API Publication 931, 1974-1976

Burklin, C.E., and Honerkamp, R.L., Revision of Evaporative Hydrocarbon Emission Factors, Radian Corp., North Carolina, EPA-450/3-76-039, August 1976

Environmental Reporter, "Implementation Plans," Federal Regulations, Section 125, Bureau of National Affairs, Washington, D.C., 1976

Environmental Reporter, State Air Laws, Bureau of National Affairs, Washington, D.C., 1976

Hopper, T.G., Impact of New Source Performance Standards on 1985 National Emissions From Stationary Sources, Vol. 1. Prepared for the U.S. EPA by the Research Corporation of New England, Conn., October 1975

Lundberg Letters, A Weekly of Statistics and Related Petroleum Industry News, (Misc. Issues), Tele-Drop, Inc., N. Hollywood, Calif.

National Fire Protection Association, Flammable and Combustible Liquid Code, 1976, Boston, Mass.

National Petroleum News, Factbook Issue "Mid-May Annuals," for 1975, 1976, 1977

Nichols, R.A., "R.A. Nichols Engineering Reports on Gasoline Transfer and Transportation Prepared for Chevron, U.S.A." Calif., February to June 1977

Office of Air Quality Planning and Standards, "State Air Pollution Implementation Plan Progress Report, June 30 to December 31, 1973," EPA Report No. 450/2-74004, April 1974

Radian Corp., A Study of Vapor Control Methods for Gasoline Marketing Operations, 2 Vols., Austin, Texas, EPA-450/3-75-046-a, April 1975

Smith, V.K. "The Treatment of Intangibles in Benefit-Cost Analysis," National Association of Attorney General Newsletter, May 1976

State Fire Marshal, State of California, "Adoption of Regulations on Gasoline Vapor Control Systems," April 18, 1977

State of California Air Resources Board, "Public Hearing on Proposed Revisions to Coordinated Basinwide Air Pollution Control Plans - Emissions From Gasoline Marketing Operations," No. 75-6-2, March 1975

CARB, "Public Hearing on Certification and Test Procedures for Gasoline Vapor Recovery Systems for Bulk Plants, Terminals, and Delivery Tanks," March 1977

CARB, "Suggested Vapor Recovery Rules Recommended for Adoption by Local Air Pollution Control Districts," April 1975

State of Colorado Air Pollution Control Commission, "Regulation No. 7, Regulation to Control the Emissions of Hydrocarbon Vapors," Colorado, April 1975

State of Maryland, Division of Program Planning and Evaluation, "1975 Emissions Inventory Report," March 1976

U.S. EPA, "Marketing and Transportation of Petroleum Products," Compilation of Air Pollutant Emission Factors, Publication No. AP-42, Washington, D.C., February 1976

U.S. EPA, Air Pollution Engineering Manual, 2nd Ed. AP-40, EPA, N.C., May 1973

U.S. EPA, Compilation of Air Pollutant Emission Factors, AP-42 Supplement No. 7, April 1977

MANUFACTURERS

Altech Industries, Inc., Allentown, Pennsylvania, L. Creiph - (internal floating roof)

Ameron Process Systems Division, Santa Ana, California, G. Mowbray - (vapor recovery system; compressor, condensation)

The Boedecker Company, Hopkins, Minnesota - (tank vent vapor condenser)

Chicago Bridge and Iron Company, Oak Brook, Illinois, B. Moriss - (storage tank)

Deleval Turbine, Inc., Wiggins Connectors Division, California - (bottom-loading system)

Dover Corporation/OPW Division, Cincinnati, Ohio, R.C. Carl - (vapor recovery equipment)

Dresser Industries, Inc., Salisbury, Maryland; Long Beach, California, A. Soni - (vapor recovery system; compression, refrigeration, absorption)

Edwards Engineering Corporation, Pompton Plains, New Jersey, R. Hirsch - (vapor recovery; direct condensation)

EMCO Wheaton, Inc., Conneaut, Ohio, C. Arnold; Los Angeles, California, R. H. Alexander) - (vapor recovery equipment)

Enquip, Inc., Tulsa, Oklahoma - (vapor emission control; compressor, chiller, separator)

Ever-Tite Coupling Company, Montebello, California, J. Mermur - (loading rack vapor control)

FMC Corporation, Brea, California, B. Cortis - (vapor recovery loader arm)

Graver Tank and Manufacturing Company, El Monte, California, R. Reba - (storage tank)

Hasselman and Associates (Hasstech, Inc.), La Jolla, California, P. LeBante, D. Hasselman - (Stage II emission control)

Hirt Combustion Engineers, Montebello, California - (service station emission control)

Pittsburgh-Des Moines Steel Company, Neville Island, Pittsburgh, Pennsylvania, M. J. McLaughlin - (storage tanks)

Process Products, Gardena, California, A. Dadis - (vapor recovery; refrigeration, condensation, adsorption)

The Protectoseal Company, Bensenville, Illinois - (emission control equipment)

QualAir Division of Energy Absorption Systems, Inc., (Clean Air Engineering) Anaheim, California, E. Brown - (service station Stage II control units)

Red Jacket, Weil-McLain Company, Inc., Davenport, Iowa, T. Hiller - (service station Stage II equipment)

Scitech Corporation (Parker Hannifin), Santa Ana, California, R. Burgat - (vapor recovery system; compressor, condenser, absorber)

Tenney Engineering, Inc., Union, New Jersey, F. H. Gardner - (vapor recovery systems, condenser)

Trico Superior, Inc., Los Angeles, California, K. Sasseen - (miscellaneous vapor recovery systems)

Ultraflote Corporation, Houston, Texas, R. Seal - (storage tank)

Union Carbide Corporation, Carbon Products Division, Cleveland, Ohio - (activated carbon gasoline vapor recovery)

ADDITIONAL INFORMATION SOURCES

Air Pollution Control District, San Diego, California -- Dick Smith and Mike Foley

Air Pollution Control District, Santa Barbara, California -- John Laird and John English

American Petroleum Institute, Washington, D.C. -- Jim Walters

ARCO Oil Company, Los Angeles, California -- B. DiGiovanni

Bay Area Air Pollution Control District, San Francisco, California -- G. G. Karels

California Air Resources Board, Sacramento, California -- Francis Perry, Dean Simeroth, and Jim Loop

California Department of Food and Agriculture Division of Measurements Standards, Sacramento, California -- O. Leifson

California Fire Marshal's Office, Sacramento, California -- Jack Smith

California Fire Prevention Committee, Long Beach, California -- Captain C. McDonald

Chevron, San Francisco, California -- J. E. Presten

Colorado Department of Health, Air Pollution Control Division, Denver, Colorado -- Ernie Trunco

Continental Oil Company, Ponca City, Oklahoma -- D. A. Forbes

Douglas Oil Company, Cokmpton, California -- R. S. Hodgson

Environmental Protection Agency, Washington, D.C., P. Principe; North Carolina, C. Kleeburg; and regional offices

Exxon Oil Company, Houston, Texas -- S. D. Curran

Fire Prevention Bureau, Commerce City, Colorado -- Capt. D. Kennerson

Gulf Oil Company, Beverly Hills, California -- F. E. Pacheko

Maryland Bureau of Air Quality and Noise Control, Baltimore, Maryland -- D. P. Andrew

Mobil Oil Company, Los Angeles, California -- A. E. McCluskey

National Fire Protection Association, Boston, Massachusetts -- Miles Woodworth

Private Engineering Consultant, Santa Monica, California -- K. Luedtke

Southern Pacific Pipeline, Los Angeles, California -- C. B. Miller

Union Oil Company, Los Angeles, California -- A. W. Percy

TECHNICAL REPORT DATA
(Please read Instructions on the reverse before completing)

1. REPORT NO.	2.	3. RECIPIENT'S ACCESSION NO.
4. TITLE AND SUBTITLE Hydrocarbon Control Strategies for Gasoline Marketing Operations		5. REPORT DATE May 1978 6. PERFORMING ORGANIZATION CODE
7. AUTHOR(S) R. L. Norton, R. R. Sakaida, A. Kokin, M.M. Yamada, A. Kashani		8. PERFORMING ORGANIZATION REPORT NO.
9. PERFORMING ORGANIZATION NAME AND ADDRESS Pacific Environmental Services 1930 14th Street Santa Monica, California 90404		10. PROGRAM ELEMENT NO. 11. CONTRACT/GRANT NO. 68-02-2606, Task 13
12. SPONSORING AGENCY NAME AND ADDRESS U.S. Environmental Protection Agency Office of Air Quality Planning and Standards Emission Standards and Engineering Division Research Triangle Park, North Carolina 27711		13. TYPE OF REPORT AND PERIOD COVERED 14. SPONSORING AGENCY CODE

15. SUPPLEMENTARY NOTES

EPA Project Officer: Charles F. Kleeberg

16. ABSTRACT

This informational document provides basic and current descriptions of gasoline marketing operations and methods that are available to control hydrocarbon emissions from these operations. The three types of facilities that are described are terminals, bulk plants, and service stations. Operational aand business trends are also discussed. The potential emissions from typical facilities, including transport trucks, are given.

The operations which lead to emissions from these facilities include (1) gasoline storage, (2) gasoline loading at terminals and bulk plants, (3) gasoline delivery to bulk plants and service stations, and (4) the refueling of vehicles at service stations.

Available and possible methods for controlling emissions are described with their estimated control efficiencies and costs.

This report also includes a bibliography of references cited in the text, and supplementary sources of information.

17. KEY WORDS AND DOCUMENT ANALYSIS

a. DESCRIPTORS	b. IDENTIFIERS/OPEN ENDED TERMS	c. COSATI Field/Group
Air Pollution Control Equipment Hydrocarbons Gasoline Marketing	Air Pollution Control Stationary Sources Hydrocarbon Emissions Control	

18. DISTRIBUTION STATEMENT Unlimited	19. SECURITY CLASS *(This Report)* Unclassified	21. NO. OF PAGES
	20. SECURITY CLASS *(This page)* Unclassified	22. PRICE

EPA Form 2220-1 (9-73)

☆U.S. GOVERNMENT PRINTING OFFICE: 1978 260-880/85 1-3