EPA-450/3-79-029a

Perchloroethylene Dry Cleaners - Background Information for Proposed Standards

Emission Standards and Engineering Division

U.S. ENVIRONMENTAL PROTECTION AGENCY
Office of Air, Noise, and Radiation
Office of Air Quality Planning and Standards
Research Triangle Park, North Carolina 27711

August 1980

This report has been reviewed by the Emission Standards and Engineering Division of the Office of Air Quality Planning and Standards, EPA, and approved for publication. Mention of trade names or commercial products is not intended to constitute endorsement or recommendation for use. Copies of this report are available through the Library Services Office (MD-35), U.S. Environmental Protection Agency, Research Triangle Park, N.C. 27711, or from National Technical Information Services, 5285 Port Royal Road, Springfield, Virginia 22161.

Publication No. EPA-450/3-79-029a

Background Information
and Draft
Environmental Impact Statement
for Perchloroethylene Dry Cleaners

Type of Action: Administrative

Prepared by:

Don R. Goodwin 6/2/80
(Date)

Don R. Goodwin
Director, Emission Standards and Engineering Division
Environmental Protection Agency
Research Triangle Park, N. C. 27711

Approved by:

7/2/80
(Date)

David G. Hawkins
Assistant Administrator for Air, Noise and Radiation
Environmental Protection Agency
Washington, D. C. 20460

Draft Statement Submitted to EPA's
Office of Federal Activities for Review on 7/80
(Date)

This document may be reviewed at:

Central Docket Section
Environmental Protection Agency
West Tower Lobby
Gallery 1, Waterside Mall
401 M St., S. W.
Washington, D. C. 20460

Additional copies may be obtained at:

Environmental Protection Agency Library (MD-35)
Research Triangle Park, N. C. 27711

National Technical Information Service
5285 Port Royal Road
Springfield, Virginia 22161

TABLE OF CONTENTS

	Page
LIST OF FIGURES	vii
LIST OF TABLES	viii
CHAPTER 1. SUMMARY	1-1
1.1 Regulatory Alternatives	1-1
1.2 Environmental Impact	1-2
1.3 Economic Impact	1-2
CHAPTER 2. INTRODUCTION	2-1
2.1 Background and Authority for Standards	2-1
2.2 Selection of Categories of Stationary Sources	2-5
2.3 Procedure for Development of Standards of Performance	2-6
2.4 Consideration of Costs	2-8
2.5 Consideration of Environmental Impacts	2-9
2.6 Impact on Existing Sources	2-10
2.7 Revision of Standards of Performance	2-11
CHAPTER 3. THE PERCHLOROETHYLENE DRY CLEANING INDUSTRY	3-1
3.1 General Industry Description	3-1
3.2 Dry Cleaning Processes	3-2
3.3 Baseline Emissions	3-7
References for Chapter 3	3-14
CHAPTER 4. EMISSION CONTROL TECHNIQUES	4-1
4.1 Use of Control Techniques	4-1
4.2 Types of Control Techniques	4-1
References for Chapter 4	4-12
CHAPTER 5. MODIFICATION AND RECONSTRUCTION	5-1
5.1 40 CFR Part 60 Provisions for Modification and Reconstruction	5-2
5.2 Applicability to Perchloroethylene Dry Cleaning Facilities	5-3

TABLE OF CONTENTS (continued)

		Page
CHAPTER 6.	MODEL PLANTS AND REGULATORY ALTERNATIVES	6-1
6.1	Model Plants	6-1
6.2	Regulatory Alternatives	6-3
6.3	Rationale for Ranking of Regulatory Alternatives	6-7
	References for Chapter 6	6-10
CHAPTER 7.	ENVIRONMENTAL IMPACT	7-1
7.1	Air Pollution Impact	7-1
7.2	Water Pollution Impacts	7-6
7.3	Solid Waste Impact	7-10
7.4	Energy Impact	7-11
	References for Chapter 7	7-13
CHAPTER 8.	ECONOMIC IMPACT	8-1
8.1	Industry Characterization	8-1
8.2	Cost Analysis of Control Options	8-23
8.3	Other Cost Considerations	8-42
8.4	Economic Impact	8-44
8.5	Socioeconomic Effects	8-58
	References for Chapter 8	8-62
APPENDIX A	EVOLUTION OF PROPOSED STANDARDS	A-1
APPENDIX B	INDEX TO ENVIRONMENTAL IMPACT CONSIDERATIONS	B-1
APPENDIX C	EMISSION SOURCE TEST DATA	C-1
APPENDIX D	EMISSION MEASUREMENT AND CONTINUOUS MONITORING	D-1

LIST OF FIGURES

Figure		Page
3-1	Perchloroethylene Dry Cleaning Plant Flow Diagram	3-4
5-1	Plant Configurations Encountered in the Dry Cleaning Industry	5-4
8-1	Trends in Number of Establishments and Employees for SIC 7215.	8-10
8-2	Trends in Number of Establishments and Employees for SIC 7216.	8-12
8-3	Trends in Number of Establishments and Employees for SIC 7218.	8-14

LIST OF TABLES

Table		Page
1-1	Assessment of Environmental and Economic Impacts for Each Regulatory Alernative Considered.	1-3
3-1	Perchloroethylene Emissions from Professional Dry Cleaning Plants.	3-8
3-2	Baseline Perchloroethylene Emission Levels	3-10
4-1	Summary of Perchloroethylene Dry Cleaning Test Data . . .	4-4
4-2	Summary of Carbon Adsorber Test Data	4-5
4-3	Filter and Distillation Wastes from Well-Operated Facilities	4-11
6-1	Model Plant Parameters for the Perc Dry Cleaning Industry	6-2
6-2	Control Options.	6-4
6-3	Perchloroethylene Emission Rate after Applying the Air Pollution Control Options to Model Plants.	6-8
7-1	Projected Emission Reduction from Applying the Control Options to Coin-Ops.	7-3
7-2	Projected Emission Reduction from Applying the Control Options to Commercial Dry Cleaning Plants.	7-4
7-3	Projected Emission Reduction from Applying the Control Options to Industrial Dry Cleaning Plants.	7-5
7-4	Increases in F-113 Emissions for Option 1 from the Coin-Op Segment.	7-7
7-5	Increases in F-113 Emissions for Option 1 from the Commercial Segment	7-8
7-6	Perchloroethylene Dry Cleaning Solvent in Effluent Water as a Result of Carbon Adsorption	7-9
7-7	Energy Impact of Control Options on Model Plants	7-12
8-1	Statistical Profile of Coin-Op Dry Cleaners and Laundries (SIC 7215), 1972	8-3
8-2	Statistical Profile of Dry Cleaning Plants, Except Rug Cleaning (SIC 7216), 1972.	8-5
8-3	Statistical Profile of Industrial Launderers (SIC 7218), 1972	8-7
8-4	Trends in Number of Establishments and Employees in the Dry Cleaning Industry.	8-9

LIST OF TABLES (continued)

TABLE		PAGE
8-5	Consumer Price Index	8-13
8-6	Coin-Operated Dry Cleaners and Laundries, SIC 7215, Regional Trends for Number of Establishments	8-16
8-7	Dry Cleaning Plants Except Rug Cleaning SIC 7216, Regional Trends for Number of Establishments	8-17
8-8	Industrial Launderers, SIC 7218, Regional Trends for Number of Establishments	8-18
8-9	Ratio of Market Value of Perchloroethylene Production to Total Sales in 1977 for Perc-Producing Companies	8-19
8-10	Estimated New Sources in the Unregulated Perchloroethylene Coin-Op Dry Cleaning Industry	8-20
8-11	Estimated New Sources in the Unregulated Commercial Perchloroethylene Dry Cleaning Industry	8-21
8-12	Estimated New Sources in the Unregulated Perchloroethylene Industrial Dry Cleaning Industry	8-22
8-13	Cost of Control Technology, Coin Operated, Option 1	8-25
8-14	Cost of Control Technology, Evaluation of Applying Carbon Adsorption to Coin-Ops	8-27
8-15	Approximate Capital Costs of Dry Cleaning Machines	8-30
8-16	Cost of Control, Commercial Dry Cleaners, Option 1 and Option 2	8-31
8-17	Cost of Control Technology, Industrial	8-33
8-18	Control Costs for Modifying Commercial Perc Dry Cleaners	8-35
8-19	Control Costs for Modifying Industrial Perc Dry Cleaners	8-36
8-20	Cost (Profit) Effectiveness of Controls for the Perchloroethylene Dry Cleaning Industry	8-39
8-21	Aggregate Costs of Controls on Dry Cleaning Industry	8-40
8-22	Model Plant Financial Profile	8-48
8-23	Summary of Control Costs	8-51
8-24	Effects of Control Options on Profit and Return on Investment for Model Plants	8-53
8-25	Effects of Control Options on Number of New Plants	8-57
8-26	Maximum Price Increases Resulting from Alternative Control Options on Dry Cleaning Model Plants	8-60

1. SUMMARY

Standards of performance for new stationary sources are established under section 111 of the Clean Air Act (42 U.S.C. 7411), as amended in 1977. Section 111 directs the Administrator to establish standards of performance for any category of new stationary source of air pollution which ". . . causes or contributes significantly to, air pollution which may reasonably be anticipated to endanger public health or welfare."

This Background Information Document (BID) supports proposed standards for tetrachloroethylene, more commonly known as perchloroethylene (perc) dry cleaners. Perc dry cleaners can generally be divided into three categories: coin-operated, commercial, and industrial. Coin-operated dry cleaners are usually part of a coin-operated laundry. The equipment is operated by the customer, with the cost of the cleaning usually being deposited directly into the dry cleaning machine. Commercial dry cleaners are the local stores processing men's suits, women's dresses and similar apparel. Industrial dry cleaners usually clean such articles as uniforms, work gloves, or dust mops. Some commercial facilities may process uniforms or other industrial type work, hence, there may not be an absolute distinction between commercial and industrial facilities. These three categories were used to develop the regulatory alternatives and the cost of control for each industry category.

1.1 REGULATORY ALTERNATIVES

There are two regulatory alternatives, each of which vary according to industry category. Alternative I for the coin-operated and commercial categories calls for the use of a solvent such as trichlorotrifluoroethane (F-113*), which will not contribute significantly to oxidant formation. In the industrial category, alternative I calls for the use of carbon

---

*Registered trademark.

adsorption to control perc emissions from dryers, the elimination of perceptible solvent leaks by proper maintenance, and the treatment of waste solvent to lower the perc content in the waste. Alternative II for the coin-operated category requires that the facility be well maintained, well operated, and all perceptible solvent leaks be repaired with waste solvent minimized by proper treatment. For the commercial and industrial categories, alternative II is the same as for the coin-operated category with the addition of carbon adsorption to control emissions from dryers or dry-to-dry machines.

1.2 ENVIRONMENTAL IMPACT

Regulatory alternative I would reduce nationwide emissions of perc from 55,000 Mg/yr to 47,000 Mg/yr (8,000 Mg/yr) by 1984. This decrease in perc emissions would be accompanied by an increase of 3,100 megagrams in total F-113 emissions. As shown in Table 1-1 the environmental impacts of alternative I on water pollution, solid waste, and energy would be minimal.

Regulatory alternative II would reduce nationwide perc emissions from 55,000 Mg/yr to 51,000 Mg/yr (4,000 Mg/yr) by 1984. The reduction in nationwide perc emissions would result in minimal adverse environmental impacts. There would be negligible increases in solid waste and perc in wastewater. Compliance with the proposed standard would also cause a slight increase in energy consumption due to the use of carbon adsorbers.

1.3 ECONOMIC IMPACT

Regulatory alternative I would result in an increase of approximately 23 million dollars in industrywide capital investment costs by 1984. In 1984, the total annualized costs resulting from alternative I would be approximately 7.2 million dollars. The industrial sector, however, may actually experience a beneficial economic impact under alternative I due to the recovery of solvents.

For regulatory alternative II, total capital investment costs of controls by 1984 would be about 7.2 million dollars. The 1984 total annualized costs resulting from controls would be less than 0.8 million dollars.

Table 1-1. ASSESSMENT OF ENVIRONMENTAL AND ECONOMIC IMPACTS FOR EACH REGULATORY ALTERNATIVE CONSIDERED[a]

Administrative action	Air impact	Water impact	Solid waste impact	Energy impact	Noise impact	Economic impact	Inflationary impact
Regulatory alternative I	+2**†	-1**	-1**	-1**	0	-3**	-1**
Regulatory alternative II	+2**	-1**	-1**	-1**	0	-1**	-1**
No Standards or Delayed Standards	+1**	0	-1**	0	0	+1**	0

[a] Key:

+ Beneficial Impact
- Adverse Impact

0 No Impact
1 Negligible Impact
2 Small Impact
3 Moderate Impact
4 Large Impact

* Short-term Impact
** Long-term Impact
*** Irreversible Impact

† +3 attributed to volatile organic compound reduction, and -1 attributed to increase in F-113 emissions yields a net air impact of +2.

There is not expected to be any consumer price increase incurred by any regulatory action on new sources. This is due to the competitiveness of the market, and to the fact that a new source locating in an area could not charge higher prices and still attract customers. Regulatory action which would result in a need for significantly increased costs to the consumer to make the facility profitable would result in the pre-emption of construction of the facility.

2. INTRODUCTION

2.1 BACKGROUND AND AUTHORITY FOR STANDARDS

Before standards of performance are proposed as a Federal regulation, air pollution control methods available to the affected industry and the associated costs of installing and maintaining the control equipment are examined in detail. Various levels of control based on different technologies and degrees of efficiency are expressed as regulatory alternatives. Each of these alternatives is studied by EPA as a prospective basis for a standard. The alternatives are investigated in terms of their impacts on the economics and well-being of the industry, the impacts on the national economy, and the impacts on the environment. This document summarizes the information obtained through these studies so that interested persons will be able to see to the information considered by EPA in the development of the proposed standard.

Standards of performance for new stationary sources are established under section 111 of the Clean Air Act (42 U.S.C. 7411) as amended, hereinafter referred to as the Act. Section 111 directs the Administrator to establish standards of performance for any category of new stationary source of air pollution which ". . . causes, or contributes significantly to air pollution which may reasonably be anticipated to endanger public health or welfare."

The Act requires that standards of performance for stationary sources reflect, ". . . the degree of emission reduction achievable which (taking into consideration the cost of achieving such emission reduction, and any nonair quality health and environmental impact and energy requirements) the Administrator determines has been adequately demonstrated for that category of sources." The standards apply only to stationary sources, the construction or modification of which commences after regulations are proposed by publication in the Federal Register.

The 1977 amendments to the Act altered or added numerous provisions that apply to the process of establishing standards of performance.

1. EPA is required to list the categories of major stationary sources that have not already been listed and regulated under standards of performance. Regulations must be promulgated for these new categories on the following schedule:

a. 25 percent of the listed categories by August 7, 1980.

b. 75 percent of the listed categories by August 7, 1981.

c. 100 percent of the listed categories by August 7, 1982.

A governor of a State may apply to the Administrator to add a category not on the list or may apply to the Administrator to have a standard of performance revised.

2. EPA is required to review the standards of performance every 4 years and, if appropriate, revise them.

3. EPA is authorized to promulgate a standard based on design, equipment, work practice, or operational procedures when a standard based on emission levels is not feasible.

4. The term "standards of performance" is redefined, and a new term "technological system of continuous emission reduction" is defined. The new definitions clarify that the control system must be continuous and may include a low- or non-polluting process or operation.

5. The time between the proposal and promulgation of a standard under Section 111 of the Act may be extended to 6 months.

Standards of performance, by themselves, do not guarantee protection of health or welfare because they are not designed to achieve any specific air quality levels. Rather, they are designed to reflect the degree of emission limitation achievable through application of the best adequately demonstrated technological system of continuous emission reduction, taking into consideration the cost of achieving such emission reduction, any non-air-quality health and environmental impacts, and energy requirements.

Congress had several reasons for including these requirements. First, standards with a degree of uniformity are needed to avoid situations where some States may attract industries by relaxing standards relative to other States. Second, stringent standards enhance the potential for long-term

growth. Third, stringent standards may help achieve long-term cost savings by avoiding the need for more expensive retrofitting when pollution ceilings may be reduced in the future. Fourth, certain types of standards for coal-burning sources can adversely affect the coal market by driving up the price of low-sulfur coal or effectively excluding certain coals from the reserve base because their untreated pollution potentials are high. Congress does not intend that new source performance standards contribute to these problems. Fifth, the standard-setting process should create incentives for improved technology.

Promulgation of standards of performance does not prevent State or local agencies from adopting more stringent emission limitations for the same sources. States are free under section 116 of the Act to establish even more stringent emission limits than those established under section 111 or those necessary to attain or maintain the National Ambient Air Quality Standards (NAAQS) under section 110. Thus, new sources may in some cases be subject to limitations more stringent than standards of performance under section 111, and prospective owners and operators of new sources should be aware of this possibility in planning for such facilities.

A similar situation may arise when a major emitting facility is to be constructed in a geographic area that falls under the prevention of significant deterioration of air quality provisions of Part C of the Act. These provisions require, among other things, that major emitting facilities to be constructed in such areas are to be subject to best available control technology. The term Best Available Control Technology (BACT), as defined in the Act, means

> . . . an emission limitation based on the maximum degree of reduction of each pollutant subject to regulation under this Act emitted from, or which results from, any major emitting facility, which the permitting authority, on a case-by-case basis, taking into account energy, environmental, and economic impacts and other costs, determines is achievable for such facility through application of production processes and available methods, systems, and techniques, including fuel cleaning or treatment or innovative fuel combustion techniques for control of each such pollutant.

> In no event shall application of 'best available control technology' result in emissions of any pollutants which will exceed the emissions allowed by any applicable standard established pursuant to sections 111 or 112 of this Act. (Section 169(3))

Although standards of performance are normally structured in terms of numerical emission limits where feasible, alternative approaches are sometimes necessary. In some cases physical measurement of emissions from a new source may be impractical or exorbitantly expensive. Section 111(h) provides that the Administrator may promulgate a design or equipment standard in those cases where it is not feasible to prescribe or enforce a standard of performance. For example, emissions of hydrocarbons from storage vessels for petroleum liquids are greatest during tank filling. The nature of the emissions, high concentrations for short periods during filling and low concentrations for longer periods during storage, and the configuration of storage tanks make direct emission measurement impractical. Therefore, a more practical approach to standards of performance for storage vessels has been equipment specification.

In addition, section 111(i) authorizes the Administrator to grant waivers of compliance to permit a source to use innovative continuous emission control technology. In order to grant the waiver, the Administrator must find: (1) a substantial likelihood that the technology will produce greater emission reductions than the standards require or an equivalent reduction at lower economic energy or environmental cost; (2) the proposed system has not been adequately demonstrated; (3) the technology will not cause or contribute to an unreasonable risk to the public health, welfare, or safety; (4) the governor of the State where the source is located consents; and (5) the waiver will not prevent the attainment or maintenance of any ambient standard. A waiver may have conditions attached to assure the source will not prevent attainment of any NAAQS. Any such condition will have the force of a performance standard. Finally, waivers have definite end dates and may be terminated earlier if the conditions are not met or if the system fails to perform as expected. In such a case, the source may be given up to 3 years to meet the standards with a mandatory progress schedule.

2.2 SELECTION OF CATEGORIES OF STATIONARY SOURCES

Section 111 of the Act directs the Adminstrator to list categories of stationary sources. The Administrator ". . . shall include a category of sources in such list if in his judgement it causes, or contributes significantly to, air pollution which may reasonably be anticipated to endanger public health or welfare." Proposal and promulgation of standards of performance are to follow.

Since passage of the Clean Air Amendments of 1970, considerable attention has been given to the development of a system for assigning priorities to various source categories. The approach specifies areas of interest by considering the broad strategy of the Agency for implementing the Clean Air Act. Often, these "areas" are actually pollutants emitted by stationary sources. Source categories that emit these pollutants are evaluated and ranked by a process involving such factors as: (1) the level of emission control (if any) already required by State regulations, (2) estimated levels of control that might be required from standards of performance for the source category, (3) projections of growth and replacement of existing facilities for the source category, and (4) the estimated incremental amount of air pollution that could be prevented in a preselected future year by standards of performance for the source category. Sources for which new source performance standards were promulgated or under development during 1977, or earlier, were selected on these criteria.

The Act amendments of August 1977 establish specific criteria to be used in determining priorities for all major source categories not yet listed by EPA. These are: (1) the quantity of air pollutant emissions that each such category will emit, or will be designed to emit; (2) the extent to which each such pollutant may reasonably be anticipated to endanger public health or welfare; and (3) the mobility and competitive nature of each such category of sources and the consequent need for nationally applicable new source standards of performance.

The Administrator is to promulgate standards for these categories according to the schedule referred to earlier.

In some cases it may not be feasible immediately to develop a standard for a source category with a high priority. This might happen when a

program of research is needed to develop control techniques or because techniques for sampling and measuring emissions may require refinement. In the developing of standards, differences in the time required to complete the necessary investigation for different source categories must also be considered. For example, substantially more time may be necessary if numerous pollutants must be investigated from a single source category. Further, even late in the development process the schedule for completion of a standard may change. For example, inablility to obtain emission data from well-controlled sources in time to pursue the development process in a systematic fashion may force a change in scheduling. Nevertheless, priority ranking is, and will continue to be, used to establish the order in which projects are initiated and resources assigned.

After the source category has been chosen, the types of facilities within the source category to which the standard will apply must be determined. A source category may have several facilities that cause air pollution, and emissions from some of these facilities may vary from insignificant to very expensive to control. Economic studies of the source category and of applicable control technology may show that air pollution control is better served by applying standards to the more severe pollution sources. For this reason, and because there is no adequately demonstrated system for controlling emissions from certain facilities, standards often do not apply to all facilities at a source. For the same reasons, the standards may not apply to all air pollutants emitted. Thus, although a source category may be selected to be covered by a standard of performance, not all pollutants or facilities within that source category may be covered by the standards.

2.3 PROCEDURE FOR DEVELOPMENT OF STANDARDS OF PERFORMANCE

Standards of performance must (1) realistically reflect best demonstrated control practice; (2) adequately consider the cost, the non-air-quality health and environmental impacts, and the energy requirements of such control; (3) be applicable to existing sources that are modified or reconstructed as well as new installations; and (4) meet these conditions for all variations of operating conditions being considered anywhere in the country.

The objective of a program for developing standards is to identify the best technological system of continuous emission reduction that has been adequately demonstrated. The standard-setting process involves three principal phases of activity: (1) information gathering, (2) analysis of the information, and (3) development of the standard of performance.

During the information-gathering phase, industries are queried through a telephone survey, letters of inquiry, and plant visits by EPA representatives. Information is also gathered from many other sources, and a literature search is conducted. From the knowledge acquired about the industry, EPA selects certain plants at which emission tests are conducted to provide reliable data that characterize the pollutant emissions from well-controlled existing facilities.

In the second phase of a project, the information about the industry and the pollutants emitted is used in analytical studies. Hypothetical "model plants" are defined to provide a common basis for analysis. The model plant definitions, national pollutant emission data, and existing State regulations governing emissions from the source category are then used in establishing "regulatory alternatives." These regulatory alternatives are essentially different levels of emission control.

EPA conducts studies to determine the impact of each regulatory alternative on the economics of the industry and on the national economy, on the environment, and on energy consumption. From several possibly applicable alternatives, EPA selects the single most plausible regulatory alternative as the basis for a standard of performance for the source category under study.

In the third phase of a project, the selected regulatory alternative is translated into a standard of performance, which, in turn, is written in the form of a Federal regulation. The Federal regulation, when applied to newly constructed plants, will limit emissions to the levels indicated in the selected regulatory alternative.

As early as is practical in each standard-setting project, EPA representatives discuss the possibilities of a standard and the form it might take with members of the National Air Pollution Control Techniques Advisory Committee. Industry representatives and other interested parties also participate in these meetings.

The information acquired in the project is summarized in the Background Information Document (BID). The BID, the standard, and a preamble explaining the standard are widely circulated to the industry being considered for control, environmental groups, other government agencies, and offices within EPA. Through this extensive review process, the points of view of expert reviewers are taken into consideration as changes are made to the documentation.

A "proposal package" is assembled and sent through the offices of EPA Assistant Administrators for concurrence before the proposed standard is officially endorsed by the EPA Administrator. After being approved by the EPA Administrator, the preamble and the proposed regulation are published in the Federal Register.

As a part of the Federal Register announcement of the proposed regulation, the public is invited to participate in the standard-setting process. EPA invites written comments on the proposal and also holds a public hearing to discuss the proposed standard with interested parties. All public comments are summarized and incorporated into a second volume of the BID. All information reviewed and generated in studies in support of the standard of performance is available to the public in a "docket" on file in Washington, D. C.

Comments from the public are evaluated, and the standard of performance may be altered in response to the comments.

The significant comments and EPA's position on the issues raised are included in the "preamble" of a promulgation package," which also contains the draft of the final regulation. The regulation is then subjected to another round of review and refinement until it is approved by the EPA Administrator. After the Administrator signs the regulation, it is published as a "final rule" in the Federal Register.

2.4 CONSIDERATION OF COSTS

Section 317 of the Act requires an economic impact assessment with respect to any standard of performance established under Section 111 of the Act. The assessment is required to contain an analysis of: (1) the costs of compliance with the regulation, including the extent to which the cost of compliance varies depending on the effective date of the regulation and the development of less expensive or more efficient methods of compliance;

(2) the potential inflationary or recessionary effects of the regulation; (3) the effects the regulation might have on small business with respect to competition; (4) the effects of the regulation on consumer costs; and (5) the effects of the regulation on energy use. Section 317 also requires that the economic impact assessment be as extensive as practicable.

The economic impact of a proposed standard upon an industry is usually addressed both in absolute terms and in terms of the control costs that would be incurred as a result of compliance with typical, existing State control regulations. An incremental approach is necessary because both new and existing plants would be required to comply with State regulations in the absence of a Federal standard of performance. This approach requires a detailed analysis of the economic impact from the cost differential that would exist between a proposed standard of performance and the typical State standard.

Air pollutant emissions may cause water pollution problems, and captured potential air pollutants may pose a solid waste disposal problem. The total environmental impact of an emission source must, therefore, be analyzed and the costs determined whenever possible.

A thorough study of the profitability and price-setting mechanisms of the industry is essential to the analysis so that an accurate estimate of potential adverse economic impacts can be made for proposed standards. It is also essential to know the capital requirements for pollution control systems already placed on plants so that the additional capital requirements necessitated by these Federal standards can be placed in proper perspective. Finally, it is necessary to assess the availability of capital to provide the additional control equipment needed to meet the standards of performance.

2.5 CONSIDERATION OF ENVIRONMENTAL IMPACTS

Section 102(2)(C) of the National Environmental Policy Act (NEPA) of 1969 requires Federal agencies to prepare detailed environmental impact statements on proposals for legislation and other major Federal actions significantly affecting the quality of the human environment. The objective of NEPA is to build into the decisionmaking process of Federal agencies a careful consideration of all environmental aspects of proposed actions.

In a number of legal challenges to standards of performance for various industries, the United States Court of Appeals for the District of Columbia Circuit has held that environmental impact statements need not be prepared by the Agency for proposed actions under section 111 of the Clean Air Act. Essentially, the Court of Appeals has determined that the best system of emission reduction requires the Administrator to take into account counter-productive environmental effects of a proposed standard, as well as economic costs to the industry. On this basis, therefore, the Court established a narrow exemption from NEPA for EPA determination under section 111.

In addition to these judicial determinations, the Energy Supply and Environmental Coordination Act (ESECA) of 1974 (PL-93-319) specifically exempted proposed actions under the Clean Air Act from NEPA requirements. According to section 7(c)(1), "No action taken under the Clean Air Act shall be deemed a major Federal action significantly affecting the quality of the human environment within the meaning of the National Environmental Policy Act of 1969." (15 U.S.C. 793(c)(1))

Nevertheless, the Agency has concluded that the preparation of environmental impact statements could have beneficial effects on certain regulatory actions. Consequently, although not legally required to do so by section 102(2)(C) of NEPA, EPA has adopted a policy requiring that environmental impact statements be prepared for various regulatory actions, including standards of performance developed under section 111 of the Act. This voluntary preparation of environmental impact statements, however, in no way legally subjects the Agency to NEPA requirements.

To implement this policy, a separate section in this document is devoted solely to an analysis of the potential environmental impacts associated with the proposed standards. Both adverse and beneficial impacts in such areas as air and water pollution, increased solid waste disposal, and increased energy consumption are discussed.

2.6 IMPACT ON EXISTING SOURCES

Section 111 of the Act defines a new source as ". . . any stationary source, the construction or modification of which is commenced . . ." after the proposed standards are published. An existing source is redefined as a new source if "modified" or "reconstructed" as defined in amendments to the

general provisions of Subpart A of 40 CFR Part 60, which were promulgated in the Federal Register on December 16, 1975 (40 FR 58416).

Any physical or operational change to an existing facility which results in an increase in the emission rate of any pollutant for which a standard applies is considered a modification. Reconstruction, on the other hand, means the replacement of components of an existing facility to the extent that the fixed capital cost exceeds 50 percent of the cost of constructing a comparable entirely new source and that it be technically and economically feasible to meet the applicable standards. In such cases, reconstruction is equivalent to a new construction.

Promulgation of a standard of performance requires States to establish standards of performance for existing sources in the same industry under Section 111(d) of the Act if the standard for new sources limits emissions of a designated pollutant (i.e., a pollutant for which air quality criteria have not been issued under Section 108 or which has not been listed as a hazardous pollutant under Section 112). If a State does not act, EPA must establish such standards. General provisions outlining procedures for control of existing sources under Section 111(d) were promulgated on November 17, 1975, as Subpart B of 40 CFR Part 60 (40 FR 53340).

2.7 REVISION OF STANDARDS OF PERFORMANCE

Congress was aware that the level of air pollution control achievable by any industry may improve with technological advances. Accordingly, Section 111 of the Act provides that the Administrator ". . . shall, at least every 4 years, review and, if appropriate, revise . . ." the standards. Revisions are made to assure that the standards continue to reflect the best systems that become available in the future. Such revisions will not be retroactive but will apply to stationary sources constructed or modified after the proposal of the revised standards.

3. THE PERCHLOROETHYLENE DRY CLEANING INDUSTRY

This section provides a brief background description of the domestic dry cleaning industry. The dry cleaning process and its emissions are described.

3.1 GENERAL INDUSTRY DESCRIPTION

The dry cleaning industry is a service industry involved in the cleaning and renting of apparel. The industry is basically composed of three categories that are segregated by the type of services they offer. These are (1) coin-operated facilities, (2) commercial dry cleaners, and (3) industrial dry cleaners.

Coin-operated perchloroethylene (perc) dry cleaning facilities are usually, but not necessarily, part of a "laundromat" facility and operate on either an independent or franchise basis. They provide low-cost, self-service dry cleaning without pressing, spotting, or other associated services. Since all coin-operated laundromat facilities do not contain dry cleaning equipment, there is some variation in coin-operated dry cleaning population estimates. Bureau of Census data for 1976 indicated a coin-operated dry cleaning facility population of 11,804 facilities (County Business Patterns, 1976). An industry source estimated the 1979 population of coin-operated laundromat facilities at 40,000 with 15,000 to 18,000 having dry cleaning machines (Gill, W., 18 January 1979). The difference between the two estimates is due primarily to different methods of measurement. Coin-operated dry cleaning facilities usually have two or three dry cleaning machines and an approximate annual throughput of 8,986 kg (19,811 lbs) of clothes (County Business Patterns, 1976). Approximately 97.5 percent of the coin-operated machines use perc.

Commercial perc dry cleaning plants are the most familiar type of facilities, offering the normal services of cleaning soiled apparel or

other fine goods. They include small neighborhood dry cleaning shops operating on an independent basis ("Mom and Pop" dry cleaners), the franchise dry cleaning shops ("One Hour Martinizing"), and the specialty cleaners which handle leather and other fine goods. Bureau of Census data indicated a 1976 commercial dry cleaner population of 19,953 facilities (County Business Patterns, 1976). An industry source estimated the 1979 commercial dry cleaning population at 25,000 facilities (Fisher, W., 19 January 1979). Again these differences are probably due to different methods of measurement (for further explanation see Section 8.1.2). Commercial installations usually have one dry cleaning system and have an annual throughput of less than 23,000 to 113,000 kg (<50,000-250,000 lbs) of clothes according to IFI data (Watt, A., January-February 1975). Approximately 73 percent of the dry cleaning equipment found in commercial facilities uses perc; of the remaining commercial facilities, 24 percent use petroleum and 3 percent use trichlorotrifluoroethane (F-113) (Fisher, W., 19 January 1979).

The industrial dry cleaners are the largest dry cleaning plants, predominantly supplying rental services of uniforms or other items to business, industrial, or institutional customers. Bureau of Census data indicated a 1976 population of 913 industrial laundry facilities (County Business Patterns, 1976). However, all industrial laundry facilities do not have dry cleaning equipment. An industry spokesman has estimated that 40 to 45 percent have dry cleaning equipment (Dees, E., 7 May 1979). The typical industrial dry cleaning facility has one dry cleaning system with an annual throughput of 240,000 to 700,000 kg (530,000 to 1,500,000 lbs) of clothes (Sluizer, M., 1 March 1979). Approximately 50 percent of the dry cleaning equipment found in the industrial facility sector uses perc (Sluizer, M., 1 March 1979).

3.2 DRY CLEANING PROCESSES

3.2.1 The Basic Process

Dry cleaning is essentially a waterless process in which clothes are cleaned with an organic solvent rather than with soap and water. The principal steps in the process are identical to those of laundering in water. In the first step, clothes are loaded into the washer, and solvent is added. The clothes and solvent are then agitated by the turning

motion of a paddle or wheel. After washing is completed, the clothes are spun as in a conventional washer spin cycle to remove the solvent. This part of the process is called extraction. After extraction, the used solvent is filtered and distilled to remove impurities and is then returned to the system. The filtered solids, or "muck," contain solvent which is removed and returned to the system. After solvent wash and extraction, the clothes are tumbled dry. During the drying cycle, much of the evaporated solvent is recovered in a condenser and returned to the system. Remaining solvent in the clothes is reduced by venting ambient air thru the clothes. This process is called aeration or deodorization.

The solvents used are categorized into two broad groups--(1) petroleum solvents, which are mixtures of paraffins and aromatic hydrocarbons similar to kerosene and (2) synthetic solvents, which are halogenated hydrocarbons, perc, and F-113. Differences between the dry cleaning procedures for these two groups of solvents are due to the following factors:

- Synthetic solvents are more expensive than petroleum solvents.
- Petroleum solvents are combustible while synthetic solvents are nonflammable.
- The densities of synthetic solvents are about twice those of petroleum solvents.
- OSHA standards for perc are more stringent than those for petroleum solvents. OSHA standards for F-113 are considerably less strict than those for perc or petroleum solvents.

Figure 3-1 is a schematic of a synthetic solvent-based plant.

3.2.2 Perchloroethylene Plants

As explained in section 3.1, the perc system population as a percentage of total dry cleaning machines comprises 97.5 percent of coin-operated facilities, 73 percent of commercial facilities, and 50 percent of industrial facilities for totals in each industry sector of 11,804, 15,060, and 239, respectively. In order to classify and quantify perc dry cleaning equipment and emissions, EPA tested a large commercial plant, four average commercial plants, and a large industrial plant (plants A-E as described in appendix C). No emission tests were performed on coin-operated machines.

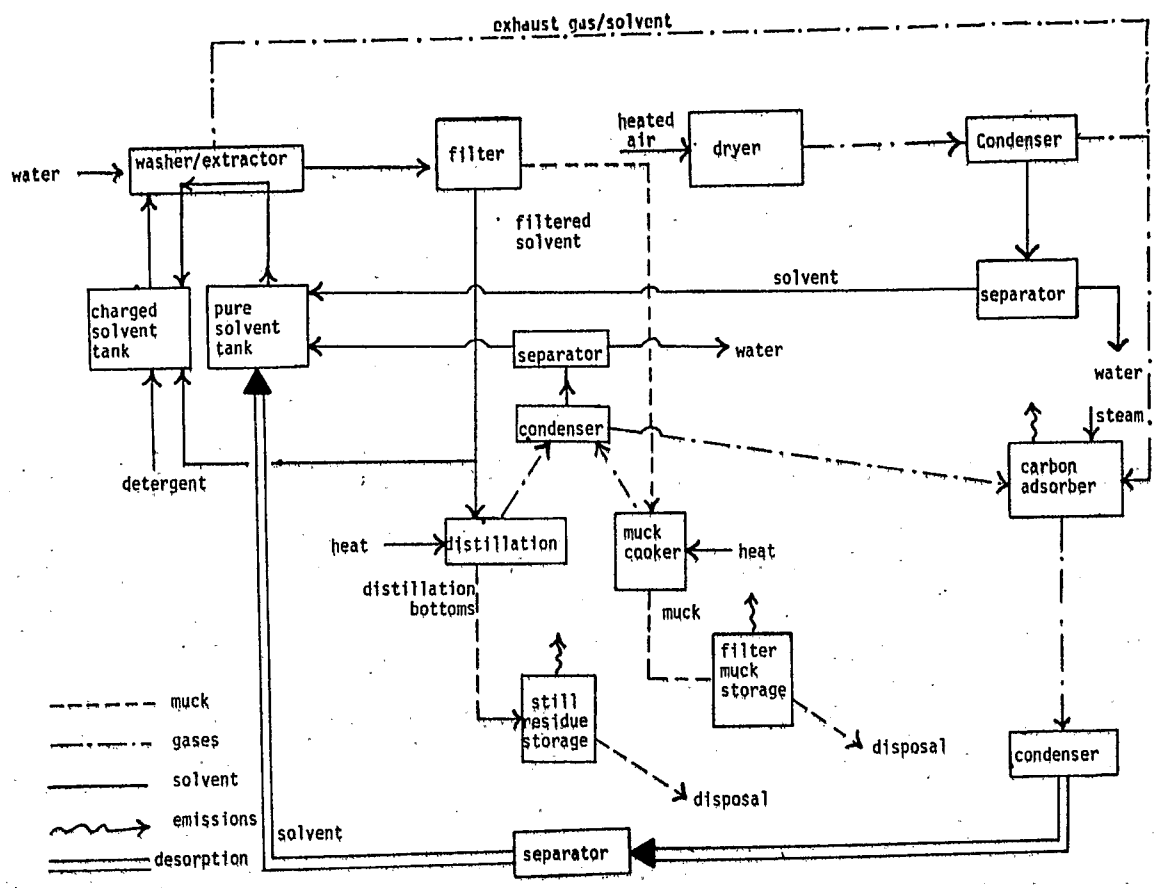

Figure 3-1. Perchloroethylene dry cleaning plant flow diagram.

3.2.2.1 Equipment Characteristics. There are two basic types of dry cleaning machines:

- Transfer machines are those in which washing and drying are performed in different machines. After washing and extraction, the fabrics must be transferred to the dryer.
- Dry-to-dry machines are those in which washing and drying occur in a single unit. In the past, these were termed "hot" machines because they were hot at the end of the complete cycle. In view of technological advancements in the field of room and low temperature drying, this name is no longer applicable.

Perc systems use either type of operation. In the commercial and industrial sectors the majority of perc systems are transfer systems (Victor, Irving, 1 November 1978), whereas all coin-ops are dry-to-dry systems. Dry-to-dry systems have the following disadvantages:

- A dry-to-dry operation can handle about half as many loads per day as a transfer operation. Because washing and drying are performed in different pieces of equipment in transfer operations, these operations can occur simultaneously on different cleaning batches. In a dry-to-dry machine a given load must be washed and dried in the same machine.
- Because the dry-to-dry machine is hot at the end of the drying cycle, the incoming solvent for the next cycle picks up a large amount of heat. This can adversely affect the machine seals and some delicate fabrics as well as increase solvent vapor losses. It should be noted that advancement is being made in the field of low temperature dry-to-dry machines. This advancement would nullify the disadvantage.

In spite of these disadvantages, dry-to-dry machines are of increasing interest to the industry as a result of the following advantages:

- Because there is no transfer of solvent-laden clothing between the washing and drying cycles, there is little chance for perc vapors to escape into the work area. For this reason, dry-to-dry units will comply more easily with Occupational Safety and Health Administration (OSHA) requirements for maximum perc concentrations in the work area than transfer units will.

- The machines are simple to operate and require little attention by the operator during the cleaning cycle.

3.2.2.2 Solvent Characteristics. Though one other halogenated hydrocarbon solvent, F-113 (trichlorotrifluoroethane), is used for dry cleaning in the United States, perc (tetrachloroethylene) is the most common dry cleaning solvent, accounting for 97.5, 73, and 50 percent of the dry cleaning systems in the coin-operated, commercial, and industrial sections, respectively. An estimated 167 million kg of perc (Laundry and Cleaners Allied Trades Association, Inc., December 1978) are used annually for dry cleaning purposes. Characteristics of perc include:

- Nonflammability
- High vapor density
- High cost ($0.49/kg, ($3.00/gal.)) (Fisher, W. E., 21 September 1978)
- Aggressive solvent properties

3.2.2.3 Solvent Treatment. Because of the expense of perc, economic operation necessitates at least partial recovery and reuse of used solvent. To accomplish this, some solvent conditioning steps are required to prevent solvent degradation and to otherwise enhance the cleaning operation. These steps include filtration, distillation, and charging.

Filtration -

Some of the soils removed from fabrics are not soluble and must be filtered from the solvent. The filters may contain activated carbon for the removal of dye from the solvent. The solids or "muck" which are removed from the filters contain solvent that is recovered by distillation in perc plants, except in the case of cartridge filters. Cartridge filters are normally just drained in their housing and are then discarded with trash.

Distillation -

In addition to the insoluble residue, which is removed by filtration, a buildup of soluble nonvolatile residue (NVR) occurs in the solvent. NVR is composed primarily of oils, fats, and greases cleaned from fabrics. It is eliminated from the used solvent by distillation. In some perc plants, a single unit serves for distillation of both the used solvent and the filter muck.

Charging -

To remove water-soluble materials from fabric during dry cleaning, a small amount of detergent and water must be added to the solvent in a step known as charging. Because these additives are removed during distillation, they must be replaced prior to solvent reuse.

3.3 BASELINE EMISSIONS

3.3.1 Plant Emissions

Table 3-1 shows solvent losses for both controlled and uncontrolled professional perc dry cleaning systems. These estimates are based on well-operated commercial and industrial plants as reported by IFI (Fisher, W. E., July-August 1975). EPA data are also given in Table 3-1 from the testing of one industrial and four commercial dry cleaning plants. It should be noted that total perc emissions from dry cleaning facilities can vary greatly with operational, maintenance, and housekeeping procedures. The data presented in Table 3-1 are from well-operated and well-controlled facilities and do not represent the norm in the industry. As shown here, uncontrolled systems have high emission rates from filter muck and dryer exhaust. The figures for dryer emissions assume that a reclaiming dryer with a vapor condenser is in use. After wash and extraction, dry-cleaned materials contain approximately 20 to 25 percent solvent by weight. The condenser on the reclaiming dryer reduces these potential perc losses to 3 to 6 percent.

Other sources of vapor losses include evaporation at the washer, distillation unit residue disposal, and miscellaneous sources. The miscellaneous sources include losses from pumps, valves, flanges, and seals; chemical and water separators; and inefficiencies in handling solvent materials.

According to IFI data (Fisher, W. E., July-August 1975), the usual commercial plant has a regenerative filter with a muck cooker. This can result in a total emission rate of about 8.1 kg of solvent per 100 kg of clothing. For an adsorber-equipped system, the emission rate is estimated at approximately 4.9 kg per 100 kg of clothing. This represents a reduction of about 40 percent. It should be noted that these figures are based on industry-generated statistics which do not necessarily agree with EPA's test data.

Table 3-1. PERCHLOROETHYLENE EMISSIONS FROM PROFESSIONAL DRY CLEANING PLANTS[a-e]

Source	Emissions, kg/100 kg of clothing	
	Plants without vapor adsorber	Plants with vapor adsorber
Evaporation @ washer	0.54 (1)	-
Evaporation @ dryer	3. (6)	-
Vapor adsorber exhaust (Properly operated)	-	0.3 (0.3)
Retention in filter much		
• Rigid tube filter-no cooker	14.	14.
• Rigid tube filter-muck cooker	1.6	1.6
• Regenerative filter-muck cooker	1. (1)	1. (1)
Retention in paper cartridges		
• Drained	1.8 (0.6)	1.8 (0.6)
• Dried in cabinet vented to adsorber	-	1.2
Retention in still residue	1.6 (1)[f]	1.6 (1)[f]
Miscellaneous losses	2. (1)	2. (1)
TOTAL	8-21 (10.6)	6-18 (3.9)

[a]Fisher, W. E., July-August 1975.
[b]Kleeberg, Charles F., 17 March 1976.
[c]Kleeberg, Charles F., 14 May 1976.
[d]Kleeberg, Charles F., 17 May 1976.
[e]IFI data (EPA data).
[f]No EPA test data, 1 assumed.

EPA data show that a commercial or industrial plant that has a regenerative filter with a muck cooker yields a total emission rate of about 10.6 kg per 100 kg of clothing and that an adsorber-equipped system yields an emission rate of 3.9 kg per 100 kg of clothing. This represents a 63 percent reduction in the emission rate (Kleeberg, C. F., 17 March 1976) (Kleeberg, C. F., 14 May 1976) (Kleeberg, C. F., 17 May 1976).

Carbon adsorbers are now being used by about 35 percent of the commercial systems (Matthews, Stanley, 5 November 1978) and 50 percent of the industrial systems (Victor, Irving, 1 November 1978). Carbon adsorbers are not considered feasible for use in coin-op systems because there is usually not enough space for a boiler on the premises to supply the steam necessary to desorb the carbon bed. According to a Dow Survey (Cunniff, Joseph, 3 March 1977), about 5 percent of coin-op machines use carbon adsorbers. In Table 3-2 the baseline emission levels are determined for each of the industry sectors accounting for plants already equipped with controls.

Note that the Dow Survey also gives data on the proporation of dry cleaners meetings given solvent mileages. For the coin-op segment of the industry, the average mileage gives a perc loss of about 16 kilograms per 100 kilograms of clothing. The most efficient 20 percent, however, have a perc loss rate of about 12 kilograms per 100 kilograms. Better control is achieved by proper maintenance and proper waste solvent treatment.

DATA FOR DETERMINING BASELINE EMISSION LEVELS

As noted in section 3.3.1, the emission test data in Table 3-1 represent well-controlled facilities in the industry. In order to determine actual baseline emission levels, however, it is necessary to quantify perc emissions from typical or average plants in the industry. The following discussion explain the derivation of the baseline emission levels for each industry sector. Table 3-2 summarizes the baseline emission levels.

<u>Coin-Op</u>

Assumptions: 5 percent of coin-op machines have carbon adsorbers.

Emission Rate with Carbon Adsorption = 11.3 kg of solvent per 100 kg of clothes cleaned

Table 3-2. BASELINE PERCHLOROETHYLENE EMISSION LEVELS[a,b]

Industry sector	Emissions, kg/100 kg of clothing		
	Uncontrolled	Controlled	Sector average[c]
Coin-operated sector	15.9	11.3	15.7
Commercial sector	10.1	8.4	9.5
Industrial sector	11.4	9.5	10.4

[a]Cuniff, Joseph, 3 March 1977.

[b]Kleeberg, C. F., 14 May 1976.

[c]Based on percentage of controlled plants (coin-operated – 5%; commercial – 35%, and industrial – 50%).

Emission Rate without Carbon Adsorption = 15.9 kg of solvent per 100 kg of clothes cleaned

Baseline Emission Rate = (0.95)(15.9) + (0.05)(11.3) = 15.7 kg of solvent per 100 kg of clothes cleaned

Commercial

Assumptions: 35 percent of commercial machines have carbon adsorbers.

Emission Rate with Carbon Adsorption = 8.4 kg of solvent per 100 kg of clothes cleaned

Emission Rate without Carbon Adsorption = 10.1 kg of solvent per 100 kg of clothes cleaned

Baseline Emission Rate = (0.35)(8.4) + (0.65)(10.1) = 9.5 kg of solvent per 100 kg of clothes cleaned

Industrial

Assumptions: 50 percent of industrial machines have carbon adsorbers.

Emission Rate with Carbon Adsorption = 9.5 kg of solvent per 100 kg of clothes cleaned

Emission Rate without Carbon Adsorption = 11.4 kg of solvent per 100 kg of clothes cleaned

Baseline Emission Rate = (9.5)(0.5) + (11.4)(0.5) = 10.4 kg of solvent per 100 kg of clothes cleaned

All assumptions and emission rates are based on data from Dow Survey (Dow Chemical, 3 March 1977) and on EPA stack test data (Kleeberg, C. F., 14 May 1976).

3.3.2 Existing and Future Regulations

The baseline emission level is the level of emission control that is achieved by the affected industry in the absence of additional EPA standards. Existing regulations limiting emissions from facilities within the dry cleaning industry are the Federal regulations promulgated by OSHA concerning worker exposure protection, the State Implementation Plans (SIP's), and some local regulations specifically addressing dry cleaning emissions. These regulations now have limited, if any, effect on the baseline emissions. The effects of water and solid waste regulations proposed by EPA on the dry cleaning industry will also be discussed.

3.3.2.1 Existing Regulations. The rules and regulations set by OSHA on dry cleaning solvent vapors were first published in the Federal

Register in August 1971 and have not changed since their original publication. The National Institute for Occupational Safety and Health (NIOSH) supplies OSHA with the information for setting standards to control health hazards in the work place. The current OSHA standards for occupational exposure to perchloroethylene are as follows:

- 100 ppm - 8-hour Time Weighted Average (TWA)
- 200 ppm - Ceiling (may not be exceeded for more than 5 minutes every 3 hours).
- 300 ppm - Peak (never to be exceeded).

OSHA standards could change if more information becomes available on any of the health effects of perc.

3.3.2.2 Future Regulations. In December 1978, a control techniques document (CTG) on Control of Volatile Organic Emissions from Perchloroethylene Dry Cleaning Systems was issued by EPA. This document provides information to State and local air pollution control agencies on reasonably available control technology (RACT) that can be applied to existing perchloroethylene dry cleaning systems. RACT is defined as the lowest emission limit that a particular source is capable of meeting by the application of control technology that is reasonably available considering technological and economic feasibility. As specified in the perc CTG, a dry cleaning facility required to meet RACT for perc would have to vent the entire dryer exhaust to a carbon adsorber or equally effective control device. In addition, the facility would be required to eliminate liquid leakage of perc from their system and limit gaseous leakage to a level specified by their State or local air pollution control agency. RACT would limit the perc concentration in the vent from the dryer control device to a maximum of 100 ppm before dilution. Based on CTG guidelines, the facility would also be required to control filter and distillation waste as follows:

(1) Cook or treat the residue from any diatomaceous earth filter so that wastes would not contain more than 25 kg of solvent per 100 kg of wet waste material.

(2) Operate a solvent still so that the residue would not contain more than 60 kg of solvent per 100 kg of wet waste material.

(3) Drain filtration cartridges in the filter housing for at least 24 hours before being discarded.

(4) Any other filtration or distillation system could be used if equivalency to these guidelines is demonstrated. For purposes of equivalency demonstration, any system reducing waste losses below 1 kg solvent per 100 kg clothes cleaned would be considered equivalent under the CTG guidelines.

Revised SIP's for perc dry cleaners are only required in those areas that are in violation of the National Ambient Air Quality Standard (NAAQS) for photochemical oxidants that cannot demonstrate compliance with the NAAQS without applying RACT by July 1982. However, some local counties and municipalities that do not meet EPA's air quality standards or that otherwise believe they have just cause to control solvent emissions have enacted local ordinances. In Arizona, the Maricopa County Bureau of Air Pollution Control requires the use of a vapor adsorber or a condensing system with an inlet temperature of less than 296 K (72°F) for all chlorinated hydrocarbons.

REFERENCES FOR CHAPTER 3

County Business Patterns 1976, United States Department of Commerce, United States Bureau of the Census, Washington, D.C., U.S. Government Printing Office, September 1977.

Cunniff, Joseph, Puritan Filters, letter to Kleeberg, Charles F., US EPA, 3 March 1977. Dow Chemical Survey, Anonymous.

Dees, Edie, TRW, letter to Sluizer, Bud confirming telephone conversation of 19 January 1979, 7 May 1979.

Fisher, William E., IFI Director of Research, telephone conversation with Dees, Edith, TRW, 19 January 1979.

Fisher, William E., International Fabricare Institute, "The ABCs of Solvent Mileage" Part One, IFI Special Reporter, No. 3-4, July-August 1975.

Fisher, William E., IFI Director of Research, telephone conversation with Nunn, Arthur B., TRW, 21 September 1978.

Gill, Ward, President of National Automatic Laundry and Cleaning Council telephone conversation with Buckwalter, Mary K., TRW, 18 January 1979.

Kleeberg, Charles F., US EPA, "Material Balance of Industrial Perchloroethylene Dry Cleaner", test report to James F. Durham on test in San Antonio, Texas, 14 May 1976.

Kleeberg, Charles F., US EPA, "Material Balance of Perchloroethylene Dry Cleaning Unit", test report to James F. Durham on test in Hershey, Pennsylvania, 17 March 1976.

Kleeberg, Charles F., US EPA, "Material Balance of a Small Commercial Perchloroethylene Dry Cleaner", test report to James F. Durham on test in Kalamazoo, Michigan, 17 May 1976.

Laundry and Cleaners Allied Trades Association, Inc., letter to Goodwin, D. R., Director, ESED, EPA, 30 November 1978.

Matthew, Stanley, R. R. Street, Inc., telephone conversation with Buckwalter, Mary K., TRW, 5 November 1978.

Sluizer, Mervyn, Technical Director of Institute of Industrial Launderers, telephone conversation with Young, Dexter E., TRW, 1 March 1979.

Victor, Irving, Executive Vice President of VIC Manufacturing Co., telephone conversation with Buckwalter, Mary K., TRW, 1 November 1978.

Watt, Andrew, IV, and William E. Fisher, "Results of Membership Survey of Dry Cleaning Operation." IFI Special Reporter No. 3-1, January-February 1975.

4. EMISSION CONTROL TECHNIQUES

This chapter discusses control technologies applicable to perc dry cleaners. All possible emission control technologies are evaluated and ranked from the highest to the lowest level of control.

4.1 USE OF CONTROL TECHNIQUES

To a great extent, solvent emissions from perc dry cleaning plants are already controlled through economic necessity. To compete with less expensive petroleum solvents, a substantial degree of solvent recovery is necessary during the drying operation. This is the reason for the use of reclaiming dryers in most perc cleaning establishments. For the same reason, many perc systems are equipped with carbon adsorbers. Carbon adsorbers are now being used by about 35 percent (5,300 facilities) of the commercial systems (Matthews, Stanley, 5 November 1978) and 50 percent (120 facilities) of the industrial systems (Victor, Irving, 1 November 1978).

4.2 TYPES OF CONTROL TECHNIQUES

4.2.1 Solvent Change to a Nonphotochemically Reactive Compound

The greatest reduction of perc emissions would be achieved by eliminating perc completely by changing to another solvent. The only readily available alternative solvents for the first option are trichlorotrifluoroethane (F-113) and petroleum solvents. Petroleum solvents are photochemically reactive, so their use in place of perc would not reduce ozone formation. Research to develop a new source standard for petroleum dry cleaning is now underway. However, petroleum solvents are flammable and are, therefore, regulated by fire codes and insurance regulations. Petroleum solvents may not be allowed in shopping centers due to their flammability. For these reasons, few dry cleaners are expected to use petroleum solvents instead of perc. At present, at least one dry cleaning

solvent, F-113, is not believed to be photochemically active. However, there is some indication that F-113, along with other fluorocarbons, may cause depletion of the upper atmospheric ozone layer. This solvent does not have the same cleaning characteristics as perc and, according to industry spokesmen, may be unsuitable for heavily soiled articles. Also, this solvent, as is the case with petroleum solvent, cannot be used in existing perc equipment. Thus modified and reconstructed perc equipment would have to be replaced with trichlorotrifluoroethane equipment if this control option were promulgated. Trichlorotrifluoroethane equipment is also more expensive than perc equipment, and the solvent itself is three to four times as expensive as perc.

Current fluorocarbon machines are dry-to-dry units. Because fluorocarbons are by far the most expensive of the dry cleaning solvents at $1.60-$2.00/kg ($10-$12/gal), fluorocarbon machines must show that low solvent consumption is cost-competitive with perc or petroleum machines. Therefore, all fluorocarbon machines have a built-in control device, a refrigeration/condensation system. The fluorocarbon machine recirculates dryer air over a refrigerated condenser (255 K, -18°C), then over electric reheat coils. Expansions or contractions in the stream volumes caused by temperature changes are accommodated by an elastomeric expansion bag on top of the unit. This bag inflates with solvent-laden air as the temperature in the machine increases and collapses as the temperature decreases. Condensed solvent is filtered and distilled for reuse.

4.2.2 Carbon Adsorption

Activated carbon has been used in a variety of applications for the removal of organic compounds from gaseous streams by adsorption. Adsorption is the property of a surface to retain molecules of a fluid with which it has come in contact. The adsorption capacity of a given quantity of carbon varies with different organic compounds and the type of carbon used. Perc can be retained on carbon very easily. The bed capacity (weight of solvent per weight of carbon, expressed as percent) for perc is approximately 20 percent by weight (Barber, J. N., 6 February 1976).

A typical commercial carbon adsorption unit has one carbon canister which is usually desorbed once a day.

A large industrial adsorption unit usually contains multiple canisters so that one can be used while the other is being regenerated. A blower forces the solvent-laden air through one of the adsorbers. Prior to reaching the point of saturation, the flow of air is switched, and the first is desorbed. Desorption is accomplished by passing steam through the carbon bed. The vaporized solvent is picked up by the steam, recovered downstream in a condenser, separated from the water, and then returned to the storage tank.

Carbon adsorption has been used in the perc dry cleaning industry for some time out of economic necessity. Almost all perc systems use condensers to recover losses from the dryer.

Summarized in Table 4-1 are the adsorber inlet and outlet data collected during the source tests. Also in Table 4-2 is a list of the sources controlled by carbon adsorption at each test site. In each case, vapors were drawn from at least the dryer or dry-to-dry machine.

For perc-based units, carbon adsorption can be used to achieve 100 ppm or less outlet concentration. Space requirements vary with the size of the unit. For the three plants tested, the adsorber floor space is shown in Table 4-2. These area estimates include piping, canister, and ductwork. More information on test results is presented in Appendix C.

For a transfer operation, OSHA requires that a current of fresh air be provided at the operator's face while unloading solvent-laden clothes from the washer. This can be accomplished by a fan which draws air through a duct at the machine door lip or by venting through the machine door itself. This solvent-laden airstream is then vented to the carbon adsorber.

Dryers generally vent only at the end of the drying cycle. Dryers may also vent when a thermostat causes cool air to enter an overheated dryer. There is at least one system design in which the dryer vents to an adsorber continuously.

Floor vents are usually installed around the machines and next to storage tank filters in order to collect fugitive emissions and vapors from solvent spills. These vents can be directed to the carbon adsorber

Table 4-1. SUMMARY OF PERC DRY CLEANING TEST DATA[a-e]

Plant	System	Throughput Kg/day	Perc emissions, Kg/100 Kg of clothing: Total plant emissions	Carbon adsorber outlet	Carbon adsorber inlet	Muck cooker filter or still	Water separator
A	Transfer	450	4.1	0.2	4.6	0.73[g]	0.07
B	"Kissing" machine	1750	2.5	0.002	7.7	0.38[i,j]	0.026
				Washer loading 1[h]			
C	Dry-to-dry	170	2.1	0.7	23.0[k]	0.6[l]	0.001
D	Dry-to-dry	185	6.6	0.1	3.3	2.73[m]	----
E	Dry-to-dry	170	2.6[e]	----	----	----	----

[a]Kleeberg, C. F., 14 May 1976.

[b]Kleeberg, C. F., 17 May 1976.

[c]Kleeberg, C. F., 17 March 1976.

[d]Jongleux, R. F., December 1979.

[e]Jongleux, R. F., April 1980. Total plant emissions were recalculated based on machine capacity versus actual throughput.

[f]Based on machine capacity.

[g]Muck cooker/still.

[h]Washer drum is vented to atmosphere during loading.

[i]Distillation unit is vented through a condenser to atmosphere; loss is 0.35 kg/100 kg.

[j]Oil cooker on still residue; loss is 0.26 kg/100 kg.

[k]This type of system is not widely used in dry cleaning industry. Most use reclaiming dryers.

[l]Cartridge filter.

[m]Low pressure type cartridge filter.

Table 4-2. SUMMARY OF CARBON ADSORBER TEST DATA

Plant	Process (units vented to carbon adsorber)	Clothes cleaned per day, Kg/day	Inlet concentration, ppm	Outlet concentration, ppm[a]	Adsorber efficiency, percent	Estimated size of unit (floor space) m^2 (ft^2)
A	Transfer, commercial (washer door, dryer floor vents, distillation unit vent)	450	600	25	96	3.7 (40)
B	"Kissing" machine industrial (washer door, dryer)	1750	5300-6500	2	99	5.6 (60)
C	Dry-to-dry, commercial dry-to-dry machine (dry-to-dry machine door, floor vents)	170	3300	100[b]	97	1.1 (12)
D	Dry-to-dry, commercial machine (dry-to-dry machine)	185	400	11	97	1.5 (16)

[a]For one cycle of adsorption-desorption of a single bed.

[b]Limited semicontinuous data show this adsorber to have been underdesigned.

from solvent spills. These vents can be directed to the carbon adsorber as was the case with test plants A and C. There is evidence that these vents are more effective if they are located at the same level as the solvent emissions; perc vapors do not necessarily drop to the floor because the vapor density of the mixture of perc in air is, at most, only about 1.1 times the vapor density of pure air.

There is no technical reason why all perc sources in dry cleaning plants that are currently vented through a stack or duct to the atmosphere cannot be directed to a carbon adsorber. This would include distillation unit vents, washer loading vents, storage tank vents, chemical separators, and floor vents.

As can be seen in Table 4-2, carbon adsorption can result in better then 96 percent emission reduction applied to gas streams seen by the adsorber.

Carbon adsorption presents a special problem for coin-operated systems. There is generally no steam demand at coin-ops and thus no steam boiler. In most cases, the steam necessary to desorb a carbon bed does not exist at these facilities, and necessary space for an adsorber is not available. In order to desorb a carbon bed, a boiler would have to be installed on site for regeneration.

4.2.3 Refrigeration/Condensation

A refrigerated condenser solvent recovery unit provides an alternative to the carbon recovery system. Whereas the carbon system is usually exhausted to the atmosphere, the refrigerated condenser is normally operated as a closed circuit and eliminates the need for external ventilating ducts.

As previously discussed, emissions from a dryer are usually limited to the aeration cycle. A refrigerated condenser works during this cycle as follows: the solvent-laden air from the cleaning machine is cooled to a very low temperature to strip it of solvent and is then recirculated to the air inlet port of the machine. The cooling effect is obtained from a refrigeration unit and is required only during the aeration cycle. This effect drops the temperature of the air below the dew point of the vapor thereby causing it to condense and drain to a water separator. The

recovered solvent is then fed to a storage tank. Test data from one source indicate that refrigeration units on dry-to-dry units can achieve emission rates comparable to a well-operated carbon adsorber equipped facility (Jongleux, R. F., April 1980). Net solvent usage during the test was 10.2 liters, and the plant throughput was 427 kg. Based on these figures, the mass loss rate from the dry cleaning unit was 3.85 kilograms of perc per 100 kilograms of clothes cleaned based on the actual weight of articles cleaned. Based on the machine capacity, the solvent loss rate was 2.6 kilograms per 100 kilograms of articles cleaned. However, it should be understood that these figures are based upon a limited amount of data.

Also, this does not mean that refrigeration units necessarily achieve control equivalent to carbon adsorption units. There are emission points that might be ducted to carbon adsorbers, but that would not be controlled by the refrigeration units. For instance, floor vents that would normally be ducted to a carbon adsorber cannot be vented to a refrigeration system because the bed of packed stoneware used as a heat sink in the system would be heated by the ambient air entering the floor vent. This stoneware is usually cooled during the drying cycle and only exposed to elevated temperatures during aeration. System efficiency would be adversely affected if the stoneware was not at a sufficiently low temperature.

4.2.4 Solvation* Unit

Another possible alternative to the carbon adsorber is the Solvation* unit. This unit has been in use in Europe for approximately 3 years and has been available in the United States for approximately 6 months.

Available information indicates that this unit operates as a closed loop sysem. The dryer exhaust is ducted to the Solvation unit where perc is condensed and then passes over the cooling coils of its associated dryer before being returned to a solvent storage tank (Weissler, Bill, 22 May 1980). The exact mechanism of operation is not currently known, but one possible explanation for the unit's operation is the use of direct contact condensation when gaseous perc emissions are passed through

---

*Registered trademark.

water. The unit is guaranteed by the U.S. manufacturer to double the dry cleaner's solvent mileage (Weissler, Bill, 22 May 1980).

4.2.5 Housekeeping

Fugitive emissions caused by poor maintenance of equipment are difficult to quantify. There are two types of fugitive losses, liquid and vapor. Liquid losses can be detected by sight. Vapor leaks above 50 ppm can be detected by smell (Wentz, Manfred, August-September 1973). Below is a list of common emission areas that should be checked periodically to control these losses. This checklist is similar to those used by knowledgeable sources (Hooker Industrial Chemicals, Bulletin Number 185) (Reeves, H. E., January 1969) (VIC Manufacturing Company, Installation and Operation Instruction for VIC Models 221 and 222) to advise perc users on how to maintain equipment.

Liquid leakage areas include:

a) Hose connections, unions, coupling, and valves.
b) Machine door gasket and seating.
c) Filter head gasket and seating.
d) Pumps.
e) Base tanks and storage containers.
f) Water separators (lost in water due to poor separation).
g) Filter sludge recovery (lost in sludge by improper recovery).
h) Distillation unit.
i) Divertor valves.
j) Saturated lint from lint baskets.
k) Cartridge filters.

Vapor leakage areas include:

a) Deodorizing and aeration valves on dryers (the seals on these valves need periodic replacement).
b) Air and exhaust ductwork (solvent lost through tears in duct).
c) Doors (doors left open are problems). Leaks in the system should be confined to the closed washer and/or dryer, if possible.
d) Button traps and lint baskets. These should be opened only as long as necessary.
e) Open containers of solvent.

f) Evaporation from wet wash during transfer process.

g) Removal of articles prior to complete drying.

Other areas include:

a) Lint screens and bags, fan blades, and condensers. These areas can adversely affect capture systems if they are clogged or caked with lint.

b) Overloading and underloading dryer can increase losses. Overloading makes drying difficult. Underloading is self-defeating since most losses are fixed in the system.

c) Inefficient extraction due to overloading or loose belts can overload the dryer.

Rapid detection and repair of leaks is essential in order to minimize solvent losses. Low and moderately priced leak detectors are available and could be used on a regular basis to assist in detecting leaks before they become large enough to see or smell. Monitors are addressed in Appendix D.

4.2.6 Waste Solvent Treatment

Waste solvent is generated by filters in the form of filter muck and by solvent stills in the form of distillation bottoms. The perc content of these wastes can be minimized before disposal by proper treatment. In perc systems, solvent may be "cooked" out of regenerable filter materials in muck cookers. These muck cookers can reduce the amount of solvent lost in filter material by 89 percent (see Table 3-1). Solvent losses from distillation bottom disposal can also be reduced in oil cookers (similar to muck cookers) to levels of about 1 kg/100 kg of wet waste material by proper operation of existing equipment (Kleeberg, C. F., 14 May 1976).

Another option for filtration is cartridge filters. Cartridge filters are applicable to low soil loadings and are used by most coin-op machines and many commercial operations. There are many types of cartridge filters as shown in Table 4-3. In the test data, plant C had a paper cartridge filter with a carbon core. This filter achieved a low emission rate of 0.6 kg of solvent/100 kg of articles cleaned when exposed to the atmosphere. Plant D had a low-pressure-type activated clay cartridge

filter. This filter had an emission rate of 2.7 kg of solvent/100 kg of articles cleaned when exposed to the atmosphere.

Generally, cartridge filters can achieve low emission factors if the manufacturer's recommendations are followed on when to dispose and replace the cartridges. Before disposal these filters should be drained in their housing a minimum of 24 hours to reduce emissions.

There are several filter and still system configurations commonly in use. Filter units and solvent stills are process equipment at cleaners and, therefore, impose no additional space requirements on dry cleaners. Possible configurations are: regenerable filter with a solvent still; disposable filter with a solvent still; disposable filter without a solvent still; and oil cooker with a solvent still. Table 4-3 shows the amount of solvent per 100 kg of wet waste material. These numbers represent well-operated filter and distillation systems as demonstrated by EPA tests.

Centrifugal separation might be an alternative to filtration for recovery of the waste solvent. Although such systems have been utilized for petroleum solvent dry cleaning, there are no data presently available on their applicability to perc dry cleaning.

Table 4-3. FILTER AND DISTILLATION WASTES FROM WELL-OPERATED FACILITIES

Source	kg of solvent/100 kg of wet waste material
Filter System	
Regeneration Tube	25 kg/100 kg[a]
Cartridge	Wide range[b]
Distillation	60 kg/100 kg[c]
Oil Cooker	1 kg/100 kg[d]

[a]Kleeberg, C. F., 17 March 1976.

[b]Too many types of cartridge filters

e.g., Clay - 24.5 kg solvent/100 kg of wet waste material
Carbon Core - 2 kg solvent/100 kg of wet waste material
Activated Clay - 2.7 kg solvent/100 kg of wet waste material

[c]Fisher, William, 10 May 1979.

[d]Kleeberg, C. F., 14 May 1976.

REFERENCES FOR CHAPTER 4

Barber, J. N., Research Director, VIC Manufacturing Company, Minneapolis, Minnesota, letter to Kleeberg, C. F., US EPA, 6 February 1976.

Fisher, W. E. Director of Research of Internal Fabricare Institute, telephone conversation with Young, Dexter E., TRW, 10 May 1979.

Fisher, W. E., Director of Research, International Fabricare Institute. Valclene Project Started. Fabricare News. September 1978.

Hooker Industrial Chemicals, Bulletin Number 185, "Hooker Handbook for Dry Cleaners", Anonymous, p. 10.

Jongleux, Robert F., "Perchloroethylene Emission Testing at Kleen Korner, New York", TRW, EMB 79-DRY-6, December 1979.

Jongleux, Robert F., "Material Balance Test Perchloroethylene Refrigerated Closed System, Northvale, New Jersey," TRW, EMB 79-DRY-7, April 1980.

Kleeberg, Charles F., US EPA, "Material Balance of Industrial Perchloroethylene Dry Cleaner", test report to James F. Durham on test in San Antonio, Texas, 14 May 1976.

Kleeberg, Charles F., US EPA, "Material Balance of Perchloroethylene Dry Cleaning Unit", test report to James F. Durham on test in Hershey, Pennsylvania, 17 March 1976.

Kleeberg, Charles F., US EPA, "Material Balance of a Small Commercial Perchloroethylene Dry Cleaner", test report to James F. Durham on test in Kalamazoo, Michigan, 17 May 1976.

Lundy, Robert, Dow Chemical, letter to Kleeberg, C. F., US EPA, 16 March 1976. Paper entitled "Poor Solvent Mileage - Professional Dry Cleaning Plant".

Matthews, Stanley, R. R. Street, telephone conversation with Buckwalter, Mary K., TRW, 5 November 1978.

Reeves, H. E., International Fabricare Institute, "Causes of Excess Loss of Perchloroethylene," IFI Practical Operating Trips Bulletin, p. 91, January 1969.

VIC Manufacturing Company, "Installation and Operating Instruction for VIC Models 221 and 222," VMC 1195.

Victor, Irving, Executive Vice President of VIC Manufacturing, telephone conversation with Buckwalter, Mary K., TRW, 1 November 1978.

Weissler, Bill, Diversitron Corporation, letter to Young, D. E., TRW, 22 May 1980.

Wentz, Manfred, International Fabricare Institute, "Dry Cleaning Solvent Vapors and OSHA," IFI Technical Bulletin No. T-421, August-September 1973.

5. MODIFICATION AND RECONSTRUCTION

In accordance with Section 111 of the Clean Air Act, standards of performance shall be established for new sources within a stationary source category which ". . . may contribute significantly to air pollution . . ." Standards apply to operations or apparatus (facilities) within a stationary source, selected as "affected facilities," that is, facilities for which applicable standards of performance have been promulgated and the construction or modification of which commenced after the proposal of said standards.

On December 16, 1975, the Agency promulgated amendments to the general provisions of 40 CFR Part 60, including additions and revisions to clarify modification and the addition of a reconstruction provision. Under the provisions of 40 CFR 60.14 and 60.15, an "existing facility" may become subject to standards of performance if deemed modified or reconstructed. An "existing facility" defined in 40 CFR 60.2(aa) is an apparatus of the type for which a standard of performance is promulgated and the construction or modification of which was commenced before the date of proposal of that standard. The following discussion examines the applicability of these provisions to perc dry cleaning facilities and details conditions under which existing facilities could become subject to standards of performance. It is important to stress that since standards of performance apply to affected facilities, which combined with existing and other facilities comprise a stationary source, the addition of an affected facility to a stationary source through any mechanism, new construction, modification, or reconstruction, does not make the entire stationary source subject to standards of performance; but rather only the added affected facilities are subject to these standards.

5.1 40 CFR PART 60 PROVISIONS FOR MODIFICATION AND RECONSTRUCTION

5.1.1 Modification

It is important that these provisions be fully understood prior to investigating their applicability.

Section 60.14 defines modification as follows:

> "Except as provided under paragraphs (d), (e) and (f) of this section, any physical or operational changes to an existing facility which result in an increase in emission rate to the atmosphere of any pollutant to which a standard applies shall be a modification. Upon modification, an existing facility shall become an affected facility for each pollutant to which a standard applies and for which there is an increase in the emission rate."

The exception in paragraph (d), as interpreted by the Court in the case of ASARCO vs. EPA in January 1978, is limited by the ruling that any operational change which results in an increase in emissions from an individual unit or facility would be considered a modification and would be subject to NSPS.

Paragraph (e) lists certain physical or operational changes which will not be considered as modifications, irrespective of any change in the emission rate. These changes include:

1. Routine maintenance, repair, and replacement;
2. An increase in the production rate not requiring a capital expenditure as defined in Section 60.2(bb);
3. An increase in the hours of operation;
4. Use of an alternative fuel or raw material if, prior to the standard, the existing facility were designed to accommodate that alternate fuel or raw material; and
5. The addition or use of any system or device whose primary function is the reduction of air pollutants, except when an emission control system is removed or replaced by a system considered to be less efficient.

Paragraph (b) clarifies what constitutes an increase in emissions in kilograms per hour and the methods for determining the increase, including the use of emission factors, material balances, continuous monitoring

systems, and manual emission tests. Paragraph (c) affirms that the addition of an affected facility to a stationary source does not make any other facility within that source subject to standards of performance. Paragraph (f) simply provides for superseding any conflicting provisions.

5.1.2 Reconstruction

Section 60.15 regarding reconstruction states:

> "If an owner or operator of an existing facility proposes to replace components, and the fixed capital cost of the new components exceeds 50 percent of the fixed capital cost that would be required to construct a comparable entirely new facility, he shall notify the Administrator of the proposed replacements. The notice must be postmarked 60 days (or as soon as practicable) before construction of the replacements is commenced . . . ."

The purpose of this provision is to ensure that an owner or operator does not perpetuate an existing facility by replacing all but vestigial components, support structures, frames, housing, etc., rather than totally replacing it in order to avoid subjugation to applicable standards of performance. As noted, upon request, EPA will determine if the proposed replacement of an existing facility's components constitutes reconstruction.

5.2 APPLICABILITY TO PERCHLOROETHYLENE DRY CLEANING FACILITIES

The purpose of this section is to outline some of the most probable types of "modifications" to existing plants and to describe the applicability of the term "reconstruction" to this industry.

Typical dry cleaning plant equipment configurations are shown in Figure 5-1. These are parallel systems, single systems, and interdependent systems. Almost all coin-operated plants are parallel systems. Most commercial and industrial plants would be of the single system configuration. The third configuration, an interdependent system, occasionally occurs in the industrial and commercial sectors of the industry. Multiple washers are used with multiple dryers without having particular dryers necessarily dedicated to any particular washer. Because of difference in solvent characteristics, however, such a plant would use only one type of solvent.

5.2.1 Modification

Modification of an existing facility that would cause an increase in emissions is deemed unlikely, however, some possible changes to the dryer

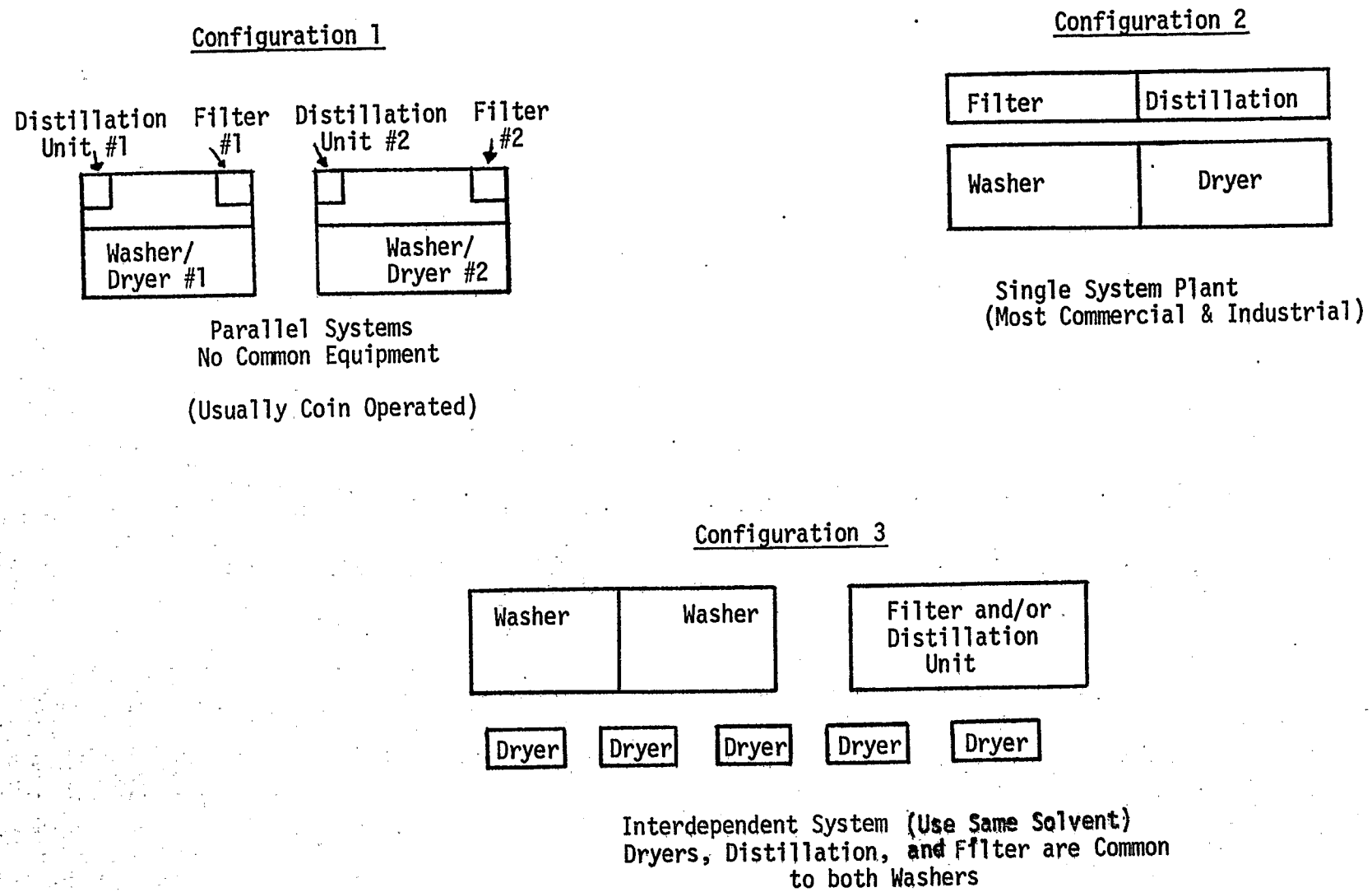

Figure 5-1. Plant configurations encountered in the dry cleaning industry.

or dry-to-dry machine could result in an increased emission rate. For instance, disabling the damper that prevents perc leaking into the exhaust during the reclaim cycle could result in increased emissions. Similarly, either reducing cooling water flow to the condenser in a reclaiming dryer or replacing the cooling coils with less efficient coils could increase the emission rate. Reducing the drying temperature without increasing the drying time could also result in an increased emission rate. Although these changes could result in increased emission rates, the actual designation of any such change as a modification would be made on a case-by-case basis.

5.2.2 Reconstruction

Replacement of a dryer or dry-to-dry machine constitutes establishment of a new facility. Therefore, reconstruction would consist of major repairs or modifications which would exceed 50 percent of the fixed capital cost of a new dryer or dry-to-dry machine. However, such changes are not usually undertaken in this industry. Although dryers last about 30 years, the replacement of the dryer drum or condensers coils could possibly exceed 50 percent of the total cost. Such reconstructed dryers would be subject to the standard.

6. MODEL PLANTS AND REGULATORY ALTERNATIVES

The purpose of this chapter is to define the model plants and regulatory alternatives. Model plants defined in this chapter are parametric descriptions of the type of plants that in EPA's judgment will be constructed, modified, or reconstructed. Model plant parameters are used as a basis to estimate the environmental, economic, and energy impacts associated with the application of the regulatory alternatives defined in section 6.2 of this chapter.

6.1 MODEL PLANTS

Model plants have been designated for each of the three industry categories to facilitate the estimation of control costs for the industry. For commercial operations, two sizes of plants were costed to show the range of costs in that category. The model plants are specified by their major characteristics; machine capacity, the number of loads cleaned per day, cycle time, number of days of operation per year, and the number of machines per plant. The model plant parameters chosen for this study are tabulated in Table 6-1.

6.1.1 Coin-Op

The parameters for the model coin-operated dry cleaning plant are based on information obtained from industry comments and equipment vendors. An average number of loads per day was calculated from the total receipt, (County Business Patterns 1976, September 1977) for this section of the industry, the number of plants (County Business Patterns 1976, September 1977), the average cost per pound of clothes (Gill, Ward A., 18 January 1979), the usual machine size, and the actual number of machines per plant (Gill, Ward A., 2 March 1977). The cycle time is taken from equipment vendors literature (Multimatic Corporation, undated). Since the equipment is used by the public, 312 days of operation per year was used.

Table 6-1. MODEL PLANT PARAMETERS FOR THE PERC DRY CLEANING INDUSTRY

	Coin-op	Commercial		Industrial
Machine capacity	3.6 kg (8 lbs)	11 kg (25 lbs)	23 kg (50 lbs)	113 kg (250 lbs)
Cycle time, minutes	23	57[a]	57[a]	35
Loads per day	4.0[b]	4.9[c]	4.9[c]	16.6
Days of operation/ year	312	250	250	250
Number of machines/ plant	2	1	1	1
Kilogram clothes/ year (lbs/yr)	8,986 (19,811)	13,475 (29,707)	28,175 (62,116)	468,950 (1,034,000)

[a]For dry-to-dry machines, transfer operation can cycle in 35 minutes.

[b]For each of two (2) machines in a plant.

[c]Average for transfer and dry-to-dry operations.

6.1.2 Commercial

About 25 percent of commercial machines are dry-to-dry type machines and the remaining 75 percent are transfer machines. Two machine sizes, 11 kg (25 lbs) and 23 kg (50 lbs), were chosen to cover the range of plants in this sector of the industry. The average number of loads (4.9) was calculated from data on the number of plants and the total throughput. The cycle time given (57 min) is based on the time needed for good quality cleaning (Landon, Steve, 25 February 1977) and an average work year of 250 days was assumed.

6.1.3 Industrial

The average number of loads per day (16.6) for the industrial sector of the industry was calculated in a manner similar to the other two sectors of the industry. Throughput was divided by the number of plants (County Business Patterns 1976, September 1977) to obtain an average throughput per plant of 468,950 Kg of clothes per year. An average machine size of 250 lbs was taken from industry comments (Sluizer, Mervyn, 4 May 1977). An average work year of 250 days per year was assumed.

6.2 REGULATORY ALTERNATIVES

The purpose of this section is to define various regulatory alternatives or possible courses of action EPA could take to abate perc emissions from dry cleaning operations. Within each regulatory alternative, the control technique for each industry category was chosen based on the appropriateness of the cost of control and the emission reduction potential for each category. The base case, no additional regulations, is also included to show the effects of existing regulations and market forces.

Table 6-2 presents these control options and specifies the control techniques to be used for each segment of the industry. The projected emissions from each segment of the industry after the application of the control options, the rationale for their choice, and the derivation of emissions are given below.

6.2.1 Control Option 1

This option is technically the highest level of emission control for the coin-op and commercial industries, no emissions of perc would be

Table 6-2. CONTROL OPTIONS

Control option	Coin-op	Commercial	Industrial
1	Non-photochemically reactive solvent equipment	Non-photochemically reactive solvent equipment	Option 1 is the same as option 2
2	Quickly identify and repair all leaks Regenerative filter wastes should not exceed 25 kg solvent per 100 kg of wet waste materials Distillation wastes should not exceed 60 kg of solvent per 100 kg of wet waste materials Cartridge filters should be drained in their housing for at least 24 hours prior to disposal	Carbon adsorption applied to washer and dryer or dry-to-dry machine and still and muck cooker vents Quickly identify and repair all leaks Regenerative filter wastes should not exceed 25 kg solvent per 100 kg of wet waste materials Distillation wastes should not exceed 60 kg of solvent per 100 kg of wet waste material Cartridge filters should be drained in their housing for at least 24 hours prior to disposal	Carbon adsorption applied to washer and dryer or dry-to-dry machine and still and muck cooker vents Quickly identify and repair all leaks Regenerative filter wastes should not exceed 25 kg solvent per 100 kg of wet waste materials Distillation wastes should not exceed 60 kg of solvent per 100 kg of wet waste material Cartridge filters should be drained in their housing for at least 24 hours prior to disposal
3	This option would require no further control other than that being established by state or local agencies	This option would require no further control other than that being established by state or local agencies	This option would require no further control other than that being established by state or local agencies

permitted. Other solvents that would be used are petroleum solvents and F-113. For this option, it was assumed that F-113 would be used since petroleum solvents may be regulated as a VOC in the future while F-113 does not contribute significantly to oxidant formation. The rapid, low temperature drying characteristics of F-113, together with its gentle solvent properties, make it useful for cleaning such delicate items as leather. There is some indication that F-113, along with other fluorocarbons, may cause depletion of the upper atmospheric ozone layer. This reduction in the capacity of the ozone layer to filter ultraviolet rays from the sun could lead to an increase in the occurence of skin cancer. However, F-113 currently has the highest Threshold Limit Value (1000 ppm) of any of the common dry cleaning solvents (indicating lowest health hazard), which makes it applicable to non-professional operators, such as coin-operated cleaners. As a consequence of these principal areas of use, most fluorocarbon machines are of relatively small capacity. The most common size appear to be 5.5 kg (12 lb) and 11.5 kg (25 lb). There does not appear to be any reason why units could not be built for larger capacity, but use in certain commercial operations and most industrial operations has been questioned principally because of the necessity to remove water soluble soils and larger quantities of grease and oil. It is asserted that F-113 and water are incompatible (Lester, R.E., 24 March 1977). For these reasons, F-113 was not chosen as a control option for the industrial segment.

For the industrial sector, carbon adsorption would be required for all affected facilities. The carbon adsorber would be required to collect emissions from dryer or dry-to-dry machines. The industrial sector would be required to eliminate all significant leaks of solvent. Facilities would be forced to repair or replace malfunctioning equipment. Industry sources and EPA tests have, however, established that a well maintained plant will control its fugitive emissions to 1 to 2 kg of perc per 100 kg of clothes cleaned. This is approximately 25 percent of the projected emissions from a regulated commercial or industrial dry cleaner. Vapor leaks would be controlled by inspection and maintenance.

The industrial sector would be required to reduce the air emissions associated with their regenerable filter wastes by cooking or treating so

that these wastes shall not contain more than 25 kg of solvent per 100 kg of wet waste material. The residue from a solvent still shall not contain more than 60 kg of solvent per 100 kg of wet waste material. Longer cooking times for filter muck and longer distillation times for distillation units should ensure meeting these waste solvent levels. Any other filtration or distillation system can be used if equivalency to these levels is demonstrated. Any system reducing waste losses below 1 kg solvent per 100 kg clothes cleaned will be considered equivalent. For a large industrial operation oil cookers (similar to muck cookers) are sometimes used. Solvent losses from distillation bottom disposal can be reduced in oil cookers to levels well below 1 kg/100 kg of clothes cleaned by proper operation of existing equipment according to a test conducted by EPA (Kleeberg, Charles F., 14 May 1976).

6.2.2 Control Option 2

For the coin-op industry, option 2 would require that the plant be well maintained and well operated, i.e., good housekeeping. For the commercial and industrial sectors, carbon adsorption or an equivalent control technology would be required for affected facilities whether they are dry-to-dry or transfer operations. The carbon adsorber or an equivalent technology would collect emissions from the washer and dryer or dry-to-dry machine. All industrial and commercial sectors would be required to eliminate all significant leaks of solvent. Facilities would be required to repair or replace malfunctioning equipment within 3 working days or have a purchase order on hand within 3 working days showing the required replacement parts have been ordered.

All industry sectors would be required to reduce the air emissions associated with their filter and distillation wastes. The residue from any diatomaceous earth filter shall be cooked or treated so that wastes shall not contain more than 25 kg of solvent per 100 kg of wet waste material. The residue from a solvent still shall not contain more than 60 kg of solvent per 100 kg of wet waste material. Longer cooking times for filter muck and longer distillation times for distillation units should ensure meeting these waste solvent levels. Cartridge filters must be drained in their filter house for at least 24 hours before being discarded.

6.2.3 Control Option 3

This option would require no further control than that being established by state or local agencies. At present there are few regulations for perc dry cleaners, however, carbon adsorbers are being used for economic reasons, as stated previously. Also, state agencies with regions of noncompliance with the National Ambient Air Quality Standard (NAAQS) for photochemical oxidants may propose regulations based on the Control Techniques Guideline (CTG) for perc dry cleaners published in December 1978. Any regulations based on the CTG are due for submission to EPA by July 1, 1980. These regulations, if similar to the model regulation in the CTG, would result in emission reductions similar to those anticipated for option 2.

6.3 RATIONALE FOR RANKING OF REGULATORY ALTERNATIVES

The two control options were ranked in order of emission reduction effectiveness. Table 6-3 shows the projected emission rates for the various control options and the percentage reduction for each option. These projected emission rates were developed based on emission test data (Kleeberg, Charles F., 17 May 1976) (Kleeberg, Charles F., 17 March 1976) (Kleeberg Charles F., 14 May 1976) and industry surveys (Cunniff, Joseph, 3 March 1977).

6.3.1 Development of Emission Rates For Coin-op Plants

The perc emission rate for option 1 is, of course, zero, as non-photochemically reactive solvents are required for this option. The projected perc emission rate for option 2 is 12 kg/100 kg of articles cleaned. This estimate is based on achieving the same reduction from the baseline emissions as was obtained by the best 20 percent of existing facilities in an industry report (Cunniff, Joseph, 3 March 1977).

6.3.2 Development of Emission Rates for Commercial Plants

The perc emission rate for control option 1, requiring the use of a non-photochemically reactive solvent, is zero.

Control option 2 has a projected emission rate of 5.0 kg of solvent per 100 kg of articles cleaned. This value was developed based on emission test data (Kleeberg, Charles F., 17 May 1976) (Kleeberg, Charles F., 17 March 1976). The carbon adsorber was assumed to be 95 percent efficient in estimating the overall control.

Table 6-3. PERCHLOROETHYLENE EMISSION RATE AFTER APPLYING THE AIR POLLUTION CONTROL OPTIONS TO MODEL PLANTS[a-f]

Industry sector	Baseline emissions (kg/100 kg)[g]	Perc controlled emission rate (kg/100 kg)		Perc emission reduction (kg/100 kg)		Perc emission reduction (percent)	
		Opt. 1	Opt. 2	Opt. 1	Opt. 2	Opt. 1	Opt. 2
Coin-op	16	0	12	16	4	100	25
Commercial	10	0	5	10	5	100	50
Industrial	10	5	5	5	5	50	50

[a]Kleeberg, Charles F., 17 March 1976.

[b]Kleeberg, Charles F., 14 May 1976.

[c]Kleeberg, Charles F., 17 May 1976.

[d]Jongleux, Robert F., December 1979.

[e]Dow Chemical Survey, March 1977.

[f]Jongleux, Robert F., February 1980.

[g]Kilograms of perc emitted/100 kilograms of articles cleaned.

6.3.3 Development of Emission Rates for Industrial Plants

The projected emission rate for control option 1 is 5.0 kg of solvent per 100 kg of articles cleaned. This value was developed based on emission test data (Kleeberg, Charles F., 14 May 1976). The carbon adsorber was assumed to be 95 percent efficient in estimating the overall control.

Option 2 is the same as option 1.

REFERENCES FOR CHAPTER 6

County Business Patterns, United States Department of Commerce, United States Bureau of the Census. Washington, D. C., U.S. Government Printing Office, September 1977.

Cunniff, Joseph, Puritan Filters, letter to Kleeberg, Charles F., EPA, 3 March 1977. Dow Chemical Survey, Anonymous.

Gill, Ward A., President of the National Automatic Laundry and Cleaning Council, letter to EPA regarding coin-operated dry cleaners, 2 March 1977.

Gill, Ward A., President of the National Automatic Laundry and Cleaning Council, telephone conversation with Dees, Edith, TRW, 18 January 1979.

Jongleux, Robert F., "Perchloroethylene Emission Testing at Kleen Korner", New York, N.Y., Test Report, TRW, December 1979.

Jongleux, Robert F., "Perchloroethylene Emission Testing at Plaza Cleaners," Northvale, N.J., (Draft) TRW, February 1980.

Kleeberg, Charles F., US EPA, "Material Balance of Industrial Perchloroethylene Dry Cleaner", test report to James F. Durham on test in San Antonio, Texas, 14 May 1976.

Kleeberg, Charles F., US EPA, "Material Balance of Perchloroethylene Dry Cleaning Unit", test report to James F. Durham on test in Hershey, Pennsylvania, 17 March 1976.

Kleeberg, Charles F., US EPA. "Material Balance of a Small Commercial Perchloroethylene Dry Cleaner", test report to James F. Durham on test in Kalamazoo, Michigan, 17 May 1976.

Landon, Steve, President, Washex Machinery Corp., letter to Mr. John H. Haines, U.S. Environmental Protection Agency, 25 February 1977.

Lester, R. E., Dry Cleaning Manager, American Laundry Machinery, letter to John Haines, EPA, 24 March 1977.

Multimatic Corporation brochure on Multimatic-solo.

Sluizer, Mervyn, Technical Director, Institute of Industrial Launderers, letter to Walsh, Robert T., U.S. Environmental Protection Agency, 4 May 1977.

7. ENVIRONMENTAL IMPACT

The air pollution impacts and other environmental consequences of applying the control options presented in Chapter 6 are discussed in this chapter. For the purpose of this analysis, the control options will be evaluated in terms of being applied to the model plants developed in Chapter 6. A comparison will be made between baseline emissions from a typical plant and controlled emissions from plants using the control options. The discussion will be based on the estimate of energy usage and environmental concerns associated with each system considered. Specific environmental impact areas to be considered include air pollution, water pollution, solid waste disposal, energy impacts, and other impacts as applicable.

Primary potential impacts, those attributed directly to the use of a control system, will be identified and discussed such as air emissions, water consumption, and energy demand resulting from requiring a carbon adsorption recovery system. Secondary impacts, indirect or induced, will also be identified and discussed. An example would be incremental increases in emissions from a boiler used to supply additional steam to the adsorber.

7.1 AIR POLLUTION IMPACT

7.1.1 Photochemical Compound Increases

The baseline and controlled pollutant emission factors shown in Table 6-3 for the model plants are based on EPA test data (discussed in Chapter 4 and Appendix C) for the industrial and commercial sectors and the Dow Chemical Survey (Cunniff, Joseph, 3 March 1977) for the coin-up sector. The emission reduction percentages are also shown in Table 6-3. These reduction percentages were used in determining controlled emission levels from the baseline emission levels for each of the industry categories. The logic and rationale leading to the selection of the baseline emission levels can be found in Chapter 3, Section 3.3.

The new sources estimated in Chapter 8 (Section 8.1.5) for each industry sector were used in calculating the total industry baseline and controlled emissions. Industry representatives have supplied total sales figures for perc which were three times the values from mass emission estimates based on average industry statistics. The variation in values is accounted for by the use of a range of emission values in estimating adverse environmental impacts. Emission reductions, however, are based on the lower, more conservative figure. Therefore, the calculated emission reduction attributed to this proposed standard is conservative.

Tables 7-1, 7-2, and 7-3 show the national emission reduction for each of the three industry sectors from applying the control options for the years 1980 through 1989. These nationwide emission estimates would be affected by any emission reduction attributable to State or local regulations. Revised State Implementation Plans (SIPs) that may incorporate the recommendations in the CTG on perc dry cleaners are due to be submitted to the Administrator by July 1, 1980. Not all States are required to submit SIP revisions, nor are all regions in each State necessarily affected by SIP revisions. Changes in baseline perc emissions caused by the SIP revisions would lower the emission reduction. SIP revisions for controlling perc dry cleaners will be required only from photochemical oxidant nonattainment areas that cannot demonstrate compliance with the NAAQS for photochemical oxidants by 1982 without controlling perc dry cleaners.

From Tables 7-1, 7-2, and 7-3, it can be seen that control option 1 is the highest level of control, reducing total perc baseline emissions by 7,706 megagrams in 1984 if imposed in 1980. This option requires nonphotochemically reactive solvent equipment for all affected facilities in the commercial and coin-op sectors and requires carbon adsorption, housekeeping, and solid waste control for the industrial sector.

Control option 2 is a lower level of control with carbon adsorption, housekeeping, and solid waste control being required for the commercial and industrial categories and housekeeping with solid waste control being required for the coin-op industry. Option 2 would reduce total perc baseline emissions by 4,095 megagrams in 1984 if imposed in 1980.

Table 7-1. PROJECTED EMISSION REDUCTION FROM APPLYING THE CONTROL OPTIONS TO COIN-OPS (megagrams of perc/year)

Year	Baseline emissions	Emissions after control	Emission reduction
		Option 1	
1980	216	0	216
1981	431	0	431
1982	647	0	647
1983	863	0	863
1984	1,078	0	1,078
1985	1,294	0	1,294
1986	1,510	0	1,510
1987	1,725	0	1,725
1988	1,941	0	1,941
1989	2,156	0	2,156
		Option 2	
1980	216	162	54
1981	431	323	108
1982	647	485	162
1983	863	647	216
1984	1,078	808	270
1985	1,294	960	334
1986	1,510	1,132	378
1987	1,725	1,293	432
1988	1,941	1,455	486
1989	2,156	1,616	540

Table 7-2. PROJECTED EMISSION REDUCTION FROM APPLYING THE CONTROL OPTIONS TO COMMERCIAL DRY CLEANING PLANTS (megagrams of perc/year)

Year	Baseline emissions	Emissions after control	Emission reduction
		Option 1	
1980	1,099	0	1,099
1981	2,210	0	2,210
1982	3,334	0	3,334
1983	4,465	0	4,465
1984	5,605	0	5,605
1985	6,756	0	6,756
1986	7,921	0	7,921
1987	9,093	0	9,093
1988	10,275	0	10,275
1989	11,779	0	11,779
		Option 2	
1980	1,099	549	549
1981	2,210	1,105	1,105
1982	3,334	1,667	1,667
1983	4,465	2,232	2,232
1984	5,605	2,802	2,802
1985	6,756	3,378	3,378
1986	7,921	3,960	3,960
1987	9,093	4,545	4,545
1988	10,275	5,142	5,142
1989	11,779	5,743	5,743

Table 7-3. PROJECTED EMISSION REDUCTION FROM APPLYING THE CONTROL OPTIONS TO INDUSTRIAL DRY CLEANING PLANTS (megagrams of perc/year)

Year	Baseline emissions	Emissions after control	Emission reduction
		Option 1	
1980	410	205	205
1981	818	409	409
1982	1,226	613	613
1983	1,636	818	818
1984	2,046	1,023	1,023
1985	2,456	1,228	1,228
1986	2,861	1,431	1,431
1987	3,314	1,657	1,657
1988	3,764	1,882	1,882
1989	4,214	2,107	2,107
		Option 2	
1980	410	205	205
1981	818	409	409
1982	1,226	613	613
1983	1,636	818	818
1984	2,046	1,023	1,023
1985	2,456	1,228	1,228
1986	2,861	1,431	1,431
1987	3,314	1,657	1,657
1988	3,764	1,882	1,882
1989	4,214	2,107	2,107

7.1.2 Nonphotochemical Compound Increases

The air quality impact resulting from the imposition of option 1 includes an increase in emissions from use of alternative nonphotochemically reactive solvents. At present, this implies the use of F-113. Though F-113 is not now considered a precursor to lower atmospheric photochemical oxidant pollution, there is a possibility that F-113 emissions will be regulated. Such regulation could result from the fact that F-113, along with other fluorocarbons, may contribute to the depletion of the upper atmospheric ozone layer. However, insufficient data are available for the establishment of standards for F-113 or other dry cleaning solvents. The increased F-113 emissions resulting from the coin-op and commercial segments of the perc dry cleaning industry are given in Tables 7-4 and 7-5, respectively.

7.2 WATER POLLUTION IMPACTS

The only potential water pollutants created by applying carbon adsorption to perc dry cleaners occur during the desorption of carbon adsorbers when condensed steam and perc become mixed. This mixture is separated into water and perc by a water separator.

Table 7-6 shows the effluent from perc dry cleaners resulting from the use of carbon adsorbers. The number of desorptions/year were calculated from information in a manufacturer's equipment brochure (VIC Manufacturing Co., September 1976) and were varied for each of the different model plant sizes. The water condensed from the carbon desorption process is generally disposed of by sewer. EPA has analyzed water samples of this effluent from the separator and has found them to contain less than 100 ppm perc by weight. The total perc sewered nationally in 1984 as a result of the NSPS being imposed in 1980 is expected to be about 1.5 to 4 megagrams and is expected to increase to about 3 to 9 megagrams by 1989 nationwide. These figures represent a 15 percent increase in the total perc sewered above the amount of perc sewered without the NSPS. These ranges have been referenced in section 7.1.1.

Under the Clean Water Act, perc is one of the 65 pollutants listed as toxic. Water quality criteria levels for the protection of aquatic life and human health in ambient waters have been established for perc. To protect fresh water aquatic life, a 24-hour concentration level of

Table 7-4. INCREASES IN F-113 EMISSIONS FOR OPTION 1 FROM THE COIN-OP SEGMENT

Year	Number of coin-op units	New F-113* emissions (megagrams/year)	Cumulative F-113 emissions (megagrams/year)
1980	300	67	67
1981	300	67	134
1982	300	67	201
1983	300	67	268
1984	300	67	335
1985	300	67	402
1986	300	67	469
1987	300	67	536
1988	300	67	603
1989	300	67	670

* Because of the solvent switching requirement of Option 1. The increase in F-113 emissions results from modification and/or reconstruction of existing coin-op facilities.

Table 7-5. INCREASES IN F-113 EMISSIONS FOR OPTION 1 FROM THE COMMERCIAL SEGMENT

Year	Number of new commercial units	New F-113 emissions (megagrams/year)	Cumulative F-113 emissions (megagrams/year)
1980	641	549	549
1981	648	556	1,105
1982	655	562	1,667
1983	659	565	2,232
1984	665	570	2,802
1985	671	576	3,378
1986	678	582	3,960
1987	683	585	4,545
1988	689	597	5,142
1989	695	601	5,743

Table 7-6. PERCHLOROETHYLENE DRY CLEANING SOLVENT IN EFFLUENT WATER AS A RESULT OF CARBON ADSORPTION (MODEL PLANTS)

Model plants	Steam[a] usage kg/yr (lbs/yr)	Solvent disposed of kg/yr (lbs/yr)
Commercial		
11 kg (25 lb)	2,345 (5,169)	0.2 (0.5)
23 kg (50 lb)	4,883 (10,764)	0.5 (1.1)
Industrial		
113 kg (250 lb)	105,750 (233,139)	10.5 (23.3)

Model plant data found in Chapter 6. Based on Recovery of Perchloroethylene.

[a]Steam Usage: Commercial and Industrial 70.5 kg (155 lbs) steam/desorb

[Steam usage from equipment brochure - the original VIC Mileage Booster Vapor Adsorption System]

310 ppb should not be exceeded, while a 700 ppb concentration level should never be exceeded. This concentration level should not affect the dry cleaner using perc, because, although most perc dry cleaners discharge waste water containing about 100 ppm perc by weight into the sewage system, by the time this water would reach the receiving waters, it would be sufficiently diluted so as to meet the 310 ppb level. The resulting effect on water quality would be insignificant.

7.3 SOLID WASTE IMPACT

There is little solid waste associated with the air pollution control technique, carbon adsorption. Carbon in adsorbers eventually must be replaced because of blinding of the bed by small pieces of lint, other particulate matter, and some organic compounds that are difficult to desorb. The carbon can be regenerated, but eventually must be discarded, about every 15 years. A carbon adsorber in a typical commercial perc plant uses around 125 kilograms (275 lbs) of carbon. Carbon adsorbers for industrial perc plants may use up to 450 kilograms (990 lbs) of carbon. The solid waste impact from the entire industry is estimated to be about 120 megagrams (132 tons) by 1995.

The techniques used to reduce emissions from solvent filters and distillation units do not increase solid waste at all; they do reduce the amount of solvent in discarded muck and filters and in still residue. The emission reduction from control of filter disposal is part of the total emission reduction.

Under the Solid Waste Disposal Act as amended by the Resource Conservation and Recovery Act (RCRA) of 1976, perc is listed specifically as a hazardous waste under the category "halogenated solvent and solvent recovery still bottoms." There are no existing Federal regulations for the dry cleaning industry specifically concerning solid wastes at this time; however, facilities producing greater than 1,000 kg of solvent/month may be regulated by RCRA. An industrial dry cleaner could be affected by RCRA. This act generally states that hazardous wastes must be controlled from the time of their generation to the time of their storage treatment and or disposal. The smaller dry cleaning facilities producing less than

1,000 kg of solvent waste/month would be regulated by a State-approved solid waste plan.

7.4 ENERGY IMPACT

Control option 1 requiring nonphotochemically reactive solvent equipment for new and modified sources for the coin-op and commercial industry requires the most electricity, as can be seen in Table 7-7. No additional steam would be needed for this option as a carbon adsorber is not required; therefore, there would be no fuel usage. Option 2 for the commercial category and options 1 and 2 for the industrial category would both have increased fuel and electricity usage for the carbon adsorber. The fuel and electricity usage values for the model plants found in Table 7-7 were calculated using the annualized operating cost of steam and electricity for each of the control options (see section 8.2) along with $7.28/Mg of steam to obtain fuel usage and $0.0126/MJ to obtain electricity usage.

Table 7-7. ENERGY IMPACT OF CONTROL OPTIONS ON MODEL PLANTS

Plant	Control option	Fuel usage GJ/yr (MBtu/yr)	Electricity (GJ/yr)
Coin-op			
3.6 kg (8 lb) machine	1	----	13
	2	----	----
Commercial			
11 kg (25 lb) machine	1	----	5
	2	7 (7)	4
23 kg (50 lb) machine	1	----	10
	2	14 (13)	5
Industrial			
113 kg (250 lb) machine	1	273 (260)	14
	2	273 (260)	14

REFERENCES FOR CHAPTER 7

Cunniff, Joseph, Puritan Filters, letter to Kleeberg, Charles F., US EPA, 3 March 1977. Dow Chemical Survey. Anonymous.

VIC Manufacturing Co. Brochure on Mileage Boosters, September 1976.

8. ECONOMIC IMPACT

8.1 INDUSTRY CHARACTERIZATION

8.1.1 Introduction

According to the classification system of the U.S. Department of Commerce, the dry cleaning industry consists of the following three Standard Industrial Classification categories:

SIC 7215 Coin-operated dry cleaners and laundries;

SIC 7216 Dry cleaning plants, except rug cleaning;

SIC 7218 Industrial launderers.

Because of the nature of the classification system, not all firms in these SIC groups are involved in dry cleaning, nor are all the reported receipts derived from dry cleaning operations. Where possible, indications are made as to the extent of dry cleaning involvement of each sector based on Census Bureau data. These include not only perc dry cleaners, but also petroleum and fluorocarbon (F-113) facilities. In addition, industry sources have provided estimates of similar information.

8.1.2 The Three Sectors: The Present Situation

8.1.2.1 Coin-Op Sector. A coin-operated laundry facility generally has a number of coin-op washing machines and dryers. These facilities are typically located in urban areas and are patronized by apartment dwellers and others who do not have immediate access to washing machines and dryers.

Census data tend to understate figures for the coin-op sector because of the "50 percent" rule. This rule causes a business to be classified in a particular SIC code based on the source of 50 percent or more of its revenues. Many coin-ops are part of commercial dry cleaners or other types of businesses and as a result do not appear in SIC 7215.

The Census of Manufacturers reported on 31 642 total coin-op establishments in 1972 and on 17,550 with payroll (Census of Selected Services, 1972). In 1976, County Business Patterns, another Census document, showed 11,804 establishments with payroll (County Business Patterns, 1976). An industry spokesman states that the actual number of coin-op facilities is currently around 40,000, disregarding the 50 percent rule and any payroll distinction (Gill, Ward, 18 January 1979).

Estimates of total receipts for the sector show a similar variance, but are consistent when expressed on a per-establishment basis. The Census shows receipts for all establishments in 1972 to be $878.641 million ($28,000+ per establishment) and for those with payroll to be $673.361 million ($38,000+ per establishment) (Census of Selected Services, 1972). The industry source states that total annual receipts are currently $1.5 billion or $37,500 per establishment (Gill, Ward, 18 January 1979). The first observation that can be made from these figures is that establishments with payroll tend to be larger operations than those without payroll, as would be expected. It also seems evident that average receipts of all establishments have increased between 1972 and the present. According to the industry source, this increase is due both to inflation and to an increase in the volume of clothes washed or cleaned in coin-op facilities (Gill, Ward, 18 January 1979).

The disparity between the number of total coin-op establishments and those with payroll shows that many are run by one person or a family. Even those establishments with payroll most frequently have only one employee (see Table 8-1). Coin-ops are predominantly single-unit establishments, though store chains do exist (Table 8-1).

Census data show that 18.8 percent of coin-op receipts in 1972 were from dry cleaning (Census of Selected Services, 1972). For coin-operated laundries and dry cleaning stores, laundry (store) work receipts are $420.895 million and dry cleaning (store) work receipts are $96.819 million. The industry spokesman puts that number at 25 percent, but because of the distorting effect of the 50 percent rule, it is probably incorrect to assume that the actual percentage has increased between 1972 and the present (Gill, Ward, 18 January 1979). The industry source

Table 8-1. STATISTICAL PROFILE OF COIN-OP DRY CLEANERS AND LAUNDRIES (SIC 7215), 1972[a]

RECEIPTS SIZE OF ESTABLISHMENTS

ESTABLISHMENTS, TOTAL[b]	31,642
ESTABLISHMENTS OPERATED ENTIRE YEAR, TOTAL	28,697
ESTABLISHMENTS WITH PAYROLL, TOTAL	16,161
WITH ANNUAL RECEIPTS OF -- $1,000,000 OR MORE	25
$500,000 to $999,000	30
$300,000 to $499,000	46
$100,000 to $299,000	561
$50,000 to $99,000	1,891
$30,000 to $49,000	3,627
$20,000 to $29,000	3,321
$10,000 to $19,000	4,691
LESS THAN $10,000	1,969
ESTABLISHMENTS WITHOUT PAYROLL, TOTAL	12,536
WITH ANNUAL RECEIPTS OF -- $50,000 or MORE	263
$20,000 to $49,000	2,699
$5,000 to $19,000	7,454
LESS THAN $5,000	2,120
ESTABLISHMENTS NOT OPERATED ENTIRE YEAR, TOTAL[b]	2,945
IN BUSINESS AT END OF YEAR[c]	2,945
NOT IN BUSINESS AT END OF YEAR	3,386

EMPLOYMENT SIZE OF ESTABLISHMENTS

ESTABLISHMENTS, TOTAL[b]	31,642
ESTABLISHMENTS OPERATED ENTIRE YEAR, TOTAL	28,697
WITH NO PAID EMPLOYEES	12,536
WITH PAID EMPLOYEES	16,161
NO EMPLOYEES	995
1 EMPLOYEE	6,284
2 EMPLOYEES	3,413
3 EMPLOYEES	2,191
4 or 5 EMPLOYEES	1,906
6 or 7 EMPLOYEES	699
8 or 9 EMPLOYEES	261
10 to 14 EMPLOYEES	249
15 to 19 EMPLOYEES	71
20 to 49 EMPLOYEES	80
50 to 99 EMPLOYEES	10
100 EMPLOYEES or MORE	2
ESTABLISHMENTS NOT OPERATED ENTIRE YEAR, TOTAL[b]	2,945
IN BUSINESS AT END OF YEAR[c]	2,945
NOT IN BUSINESS AT END OF YEAR	3,386

SINGLE UNITS AND MULTI-UNITS

	Firms	Establishments
TOTAL[b]	28,243	31,642
FIRMS IN BUSINESS AT END OF YEAR	28,249	31,642
SINGLE UNITS, TOTAL	26,709	26,709
OPERATED BY 1-ESTABLISHMENT FIRMS	26,092	26,092
WITH NO PAID EMPLOYEES	14,092	14,092
WITH PAID EMPLOYEES	12,000	12,000
OPERATED BY MULTIESTABLISHMENT FIRMS	617	617
MULTIUNITS, TOTAL	1,540	4,933
2-ESTABLISHMENT MULTIUNITS	811	1,622
3-ESTABLISHMENT MULTIUNITS	380	1,140
4-or 5-ESTABLISHMENT MULTIUNITS	245	1,068
6-to 10-ESTABLISHMENT MULTIUNITS	79	572
11-or-More-ESTABLISHMENT MULTIUNITS	25	531
FIRMS NOT IN BUSINESS AT END OF YEAR, TOTAL	3,056	3,259

LEGAL FORM OF ORGANIZATION

	All Establishments	Establishments with Payroll
TOTAL[b]	31,642	17,550
INDIVIDUAL PROPRIETORSHIPS	18,607	6,752
PARTNERSHIPS	3,815	2,341
CORPORATIONS	5,968	5,416
OTHER OR LEGAL FORM UNKNOWN	3,252	3,041

[a]U.S. Department of Commerce, Census of Selected Services, 1972, U.S. Government Printing Office, Washington, D. C. 1976.

[b]In business at year end.

[c]Businesses opened during the year and remained open at year end.

estimates that of the 40,000 facilities counted by his organization, 15,000 to 18,000 have dry cleaning machines (Gill, Ward, 18 January 1979).

The typical coin-op store that offers dry cleaning has two or three dry cleaning machines, though some have as many as eight (Gill, Ward, January 1979). Of total revenue in such an establishment, 35 percent typically comes from dry cleaning machines (Gill, Ward, 18 January 1979). The average revenue for a coin-op dry cleaning machine is $1.10/kg ($0.50/lb) of clothes with $0.22 ($0.10/lb) of that amount representing pretax profit (Gill, Ward, 18 January 1979). Most machines have a 3.6 kg (8 lb) capacity (Gill, Ward, 18 January 1979). Solvent use in coin-op dry cleaning machines is heavily weighted towards perchloroethylene (perc), with F-113 being used in only 2.5 percent of all establishments (Gill, Ward, 18 January 1979).

8.1.1.2 The Commercial Sector. The commercial sector consists of dry cleaning plants that primarily clean clothes for retail consumers. The plant may be located on the premises of a store where customers bring their clothes or at a remote location to which a number of stores may send clothes.

As in the coin-op sector, estimates of the number of establishments and the amount of receipts vary, though not as widely. In 1972, the Census Bureau reported on 28,422 establishments with payroll and put total receipts at $1,759 million. This indicates an average per-plant revenue of about $62,000 (Census of Selected Services, 1972). In 1976, County Business Patterns counted 19,953 establishments with payroll (County Business Patterns, 1976). An industry spokesman says there are presently 25,000 plants with total receipts of $1,773 million (Fisher, William, 19 January 1979). These numbers yield a per-plant revenue figure of $69,000. The same source estimates that 85 to 90 percent of total revenues arise from dry cleaning operations, whereas the 1972 Census put the ratio at 83 percent (Fisher, William, 19 January 1979). Again, the differences in government and industry estimates suggest that they have different methods of measurement, rather than indicating any sort of trend.

Along with higher revenues per plant than in the coin-op sector, commercial establishments employ more people; in 1972, they most frequently had four or five employees (see Table 8-2).

Table 8-2. STATISTICAL PROFILE OF DRY CLEANING PLANTS, EXCEPT RUG CLEANING (SIC 7216), 1972[a]

RECEIPTS SIZE OF ESTABLISHMENTS WITH PAYROLL

ESTABLISHMENTS, TOTAL[b]	28,422
ESTABLISHMENTS OPERATED ENTIRE YEAR, TOTAL	27,006
WITH ANNUAL RECEIPTS OF -- $1,000,000 or MORE	37
$500,000 to $999,000	119
$300,000 to $499,000	269
$100,000 to $299,000	3,121
$50,000 to $99,000	7,459
$30,000 to $49,000	6,636
$20,000 to $29,000	4,042
$10,000 to $19,000	3,784
LESS THAN $10,000	1,539
ESTABLISHMENTS NOT OPERATED ENTIRE YEAR, TOTAL[b]	1,416
IN BUSINESS AT END OF YEAR[c]	1,416
NOT IN BUSINESS AT END OF YEAR	1,812

EMPLOYMENT SIZE OF ESTABLISHMENTS WITH PAYROLL

ESTABLISHMENTS, TOTAL[b]	28,422
ESTABLISHMENTS OPERATED ENTIRE YEAR, TOTAL	27,006
WITH NO PAID EMPLOYEES	-
WITH PAID EMPLOYEES	27,006
NO EMPLOYEES	576
1 EMPLOYEE	4,475
2 EMPLOYEES	3,730
3 EMPLOYEES	3,456
4 or 5 EMPLOYEES	4,989
6 or 7 EMPLOYEES	3,126
8 or 9 EMPLOYEES	1,925
10 to 14 EMPLOYEES	2,423
15 to 19 EMPLOYEES	975
20 to 49 EMPLOYEES	1,115
50 to 99 EMPLOYEES	160
100 EMPLOYEES OR MORE	56
ESTABLISHMENTS NOT OPERATED ENTIRE YEAR, TOTAL[b]	1,416
IN BUSINESS AT END OF YEAR[c]	1,416
NOT IN BUSINESS AT END OF YEAR	1,812

SINGLE UNITS AND MULTI-UNITS WITH PAYROLL

	Firms	Establishments
TOTAL[b]	25,654	28,422
FIRMS IN BUSINESS AT END OF YEAR	25,654	28,422
SINGLE UNITS, TOTAL	24,316	24,316
OPERATED BY 1-ESTABLISHMENT FIRMS	23,593	23,593
WITH NO PAID EMPLOYEES	-	-
WITH PAID EMPLOYEES	23,593	23,593
OPERATED BY MULTIESTABLISHMENT FIRMS	723	723
MULTIUNITS, TOTAL	1,338	4,106
2-ESTABLISHMENT MULTIUNITS	848	1,696
3-ESTABLISHMENT MULTIUNITS	247	741
4- or 5-ESTABLISHMENT MULTIUNITS	148	637
6- to 10-ESTABLISHMENT MULTIUNITS	67	484
11-or-MORE-ESTABLISHMENT MULTIUNITS	28	548
FIRMS NOT IN BUSINESS AT END OF YEAR, TOTAL	1,581	1,731

LEGAL FORM OF ORGANIZATION (ESTABLISHMENTS WITH PAYROLL)

	Establishments
TOTAL[b]	28,422
INDIVIDUAL PROPRIETORSHIPS	10,613
PARTNERSHIPS	2,861
CORPORATIONS	9,936
OTHER OR LEGAL FORM UNKNOWN	5,012

[a]U.S. Department of Commerce, Census of Selected Services, 1972, U.S. Government Printing Office, Washington, D. C.

[b]In business at year end.

[c]Businesses opened during the year and remained open at year end.

The average revenue for commercial dry cleaning plants is $2.91/kg ($1.32/lb) (Faig, Ken, October 1979). The pretax, preowner's-salary profit averages 21.3 percent with 18.1 percent being the average owner's salary. This leaves 3.2 percent profit. This profit margin varies, according to the base price and plant efficiency, from 0 to about 6 percent.

The types of solvent used in dry cleaning establishments break down as follows: 73 percent perc, 24 percent petroleum, and 3 percent F-113 (Fisher, William, 19 January 1979).

8.1.1.3 Industrial Sector. The industrial sector of the laundry business supplies laundered uniforms, wiping towels, etc. to industrial or commercial users. The laundry may or may not own the uniforms and other materials that it cleans. SIC code 7218 makes no distinction between operations that have their own laundry and dry cleaning equipment and those that do not.

Census data for 1972, summarized in Table 8-3, show that there are many times fewer establishments in the industrial sector (1 020 with payroll) than in either of the other two. These are, in general, larger operations, with annual receipts most often over $1 million and with 20 to 49 employees. There is more of a tendency for one company to own several plants in this sector. Most of the businesses are incorporated.

For 1972, Census data show that 50 percent of industrial launderers with payroll had dry cleaning equipment (Census of Selected Services, 1972). An industry spokesman, however, estimated that currently only 40 to 45 percent of industrial launderers in the trade association have dry cleaning capability (Dees, E., 7 May 1979). The involvement of these businesses with dry cleaning is limited, even though they have equipment; a member survey of the Institute of Industrial Launderers indicated that of the total throughput handled by industrial launderers with dry cleaning equipment, only about 15 to 19 percent is dry cleaned (Dees, E., 7 May 1979). This amount is represented in large part by "better" uniforms, such as those worn by airline employees, which must be dry cleaned. In addition, some types of industrial soil are removed more effectively by dry cleaning. In general, the majority of the work done by industrial launderers continues to be laundry (Dees, E., 7 May 1979).

Table 8-3. STATISTICAL PROFILE OF INDUSTRIAL LAUNDERERS (SIC 7218), 1972[a]

RECEIPTS SIZE OF ESTABLISHMENTS WITH PAYROLL

ESTABLISHMENTS, TOTAL[a]	1,020
ESTABLISHMENTS OPERATED ENTIRE YEAR, TOTAL	974
WITH ANNUAL RECEIPTS OF -- $1,000,000 OR MORE	238
$500,000 to $999,000	225
$300,000 to $499,000	111
$100,000 to $299,000	204
$50,000 to $99,000	94
$30,000 to $49,000	42
$20,000 to $29,000	25
$10,000 to $19,000	18
LESS THAN $10,000	17
ESTABLISHMENTS NOT OPERATED ENTIRE YEAR, TOTAL	46
IN BUSINESS AT END OF YEAR[c]	46
NOT IN BUSINESS AT END OF YEAR	30

SINGLE UNITS AND MULTI-UNITS WITH PAYROLL

	Firms	Establishments
TOTAL[b]	695	1,020
FIRMS IN BUSINESS AT END OF YEAR	695	1,020
SINGLE UNITS, TOTAL	612	612
OPERATED BY 1-ESTABLISHMENT FIRMS	532	532
WITH NO PAID EMPLOYEES	-	-
WITH PAID EMPLOYEES	532	532
OPERATED BY MULTIESTABLISHMENT FIRMS	80	80
MULTIUNITS, TOTAL	83	408
2-ESTABLISHMENT MULTIUNITS	34	68
3-ESTABLISHMENT MULTIUNITS	13	39
4-or 5-ESTABLISHMENT MULTIUNITS	12	51
6-to 10-ESTABLISHMENT MULTIUNITS	17	124
11-or-MORE-ESTABLISHMENT MULTIUNITS	7	126
FIRMS NOT IN BUSINESS AT END OF YEAR, TOTAL[c]	23	23

EMPLOYMENT SIZE OF ESTABLISHMENTS WITH PAYROLL

ESTABLISHMENTS, TOTAL[b]	1,020
ESTABLISHMENTS OPERATED ENTIRE YEAR, TOTAL	974
WITH NO PAID EMPLOYEES	-
WITH PAID EMPLOYEES	974
NO EMPLOYEES	10
1 EMPLOYEE	41
2 EMPLOYEES	40
3 EMPLOYEES	35
4 or 5 EMPLOYEES	52
6 or 7 EMPLOYEES	45
8 or 9 EMPLOYEES	38
10 to 14 EMPLOYEES	81
15 to 19 EMPLOYEES	55
20 to 49 EMPLOYEES	260
50 to 99 EMPLOYEES	188
100 EMPLOYEES OR MORE	129
ESTABLISHMENTS NOT OPERATED ENTIRE YEAR, TOTAL	46
IN BUSINESS AT END OF YEAR[c]	46
NOT IN BUSINESS AT END OF YEAR	30

LEGAL FORM OF ORGANIZATION (ESTABLISHMENTS WITH PAYROLL)

	Establishments
TOTAL[b]	1,020
INDIVIDUAL PROPRIETORSHIPS	80
PARTNERSHIPS	57
CORPORATIONS	805
OTHER OR LEGAL FORM UNKNOWN	78

[a] U.S. Department of Commerce, Census of Selected Services, 1972, U.S. Government Printing Office, Washington, D. C. 1976

[b] In business at year end.

[c] Businesses opened during the year and remained open at year end.

The revenue per kilogram for dry cleaning in this sector ranges from $0.90 to $6.60 ($0.40 to $3.00 per pound), with the average falling around $1.50 to $2.00 ($0.70 to $0.90 per pound) (Dees, Edie, 7 May 1979).

8.1.3 Industry Trends

8.1.3.1 Coin-Op Sector. The historical trend in number of establishments for the coin-op sector shows that this industry is quite volatile. Year-to-year changes are between minus four and minus nine percent during the years shown in Figure 8-1 plotted from Table 8-4. This figure also shows that the number of establishments seems to shrink and expand with general economic conditions. Thus, the number of establishments increased between 1967 and 1972, decreased during the recession of 1973 to 1975, and then increased again as the economy recovered in 1976.

The vulnerability of the sector to the rest of the economy, at least in terms of number of establishments, can be explained on several bases. First, the fixed investment required to enter the business is small. It can range between $35,000 and $100,000 depending on the number of machines in the facility (Gill, Ward, 26 April 1979). Moreover, during a period of expansion, private investment increases. Combined with ease of entry, this factor accounts to some extent for the correlation between number of coin-ops and the strength of the economy.

The second controlling factor is the tendency for coin-ops to be largely one-unit, individually owned businesses, as shown in Table 8-1. Multi-unit ownership tends to engender a greater commitment to a business on the part of owners because more money is tied up in fixed assets (Atha, Lou, 29 May 1979). In addition, operating losses may be localized in one or two of several outlets, so that the profitable facilities can carry the losers temporarily (Atha, Lou, 29 May 1979). This broader base allows operating losses to be endured for longer periods of time than in the case of a single-unit operation (Atha, Lou, 29 May 1979).

For a single-unit business, the situation may be quite different. Losses cannot be spread among other units. As a result, negative cash flows cannot be tolerated for as long (Atha, Lou, 29 May 1979). The same low investment that facilitated entry into the business may tend to encourage exits in the event of prolonged operating losses (Atha, Lou,

Table 8-4. TRENDS IN NUMBER OF ESTABLISHMENTS AND EMPLOYEES IN THE DRY CLEANING INDUSTRY

	1967[a]	1972[a]	1974[b]	1975[b]	1976[b]
COIN-OP (SIC 7215)[c]					
Establishments	15,981	17,550	13,558	12,358	11,804
Employees	32,207	46,110	39,816	36,906	37,345
DRY CLEANING PLANTS (SIC 7216)[c]					
Establishments	30,625	28,422	22,425	20,707	19,953
Employees	246,348	186,701	149,303	133,593	129,543
INDUSTRIAL LAUNDERERS (SIC 7218)[c]					
Establishments	918	1,020	930	915	913
Employees	45,183	48,859	39,816	46,783	40,987

[a] 1972 Census of Selected Services, U.S. Department of Commerce, Bureau of the Census.

[b] County Business Patterns, U.S. Summaries (Volumes for 1974, 1975, 1976), U.S. Department of Commerce.

[c] For establishments with payroll.

NOTE: 1974 was the first year County Business Patterns reported on all establishments. Previously, it counted a firm with more than one establishment as one unit, making its figures incompatible with Census figures.

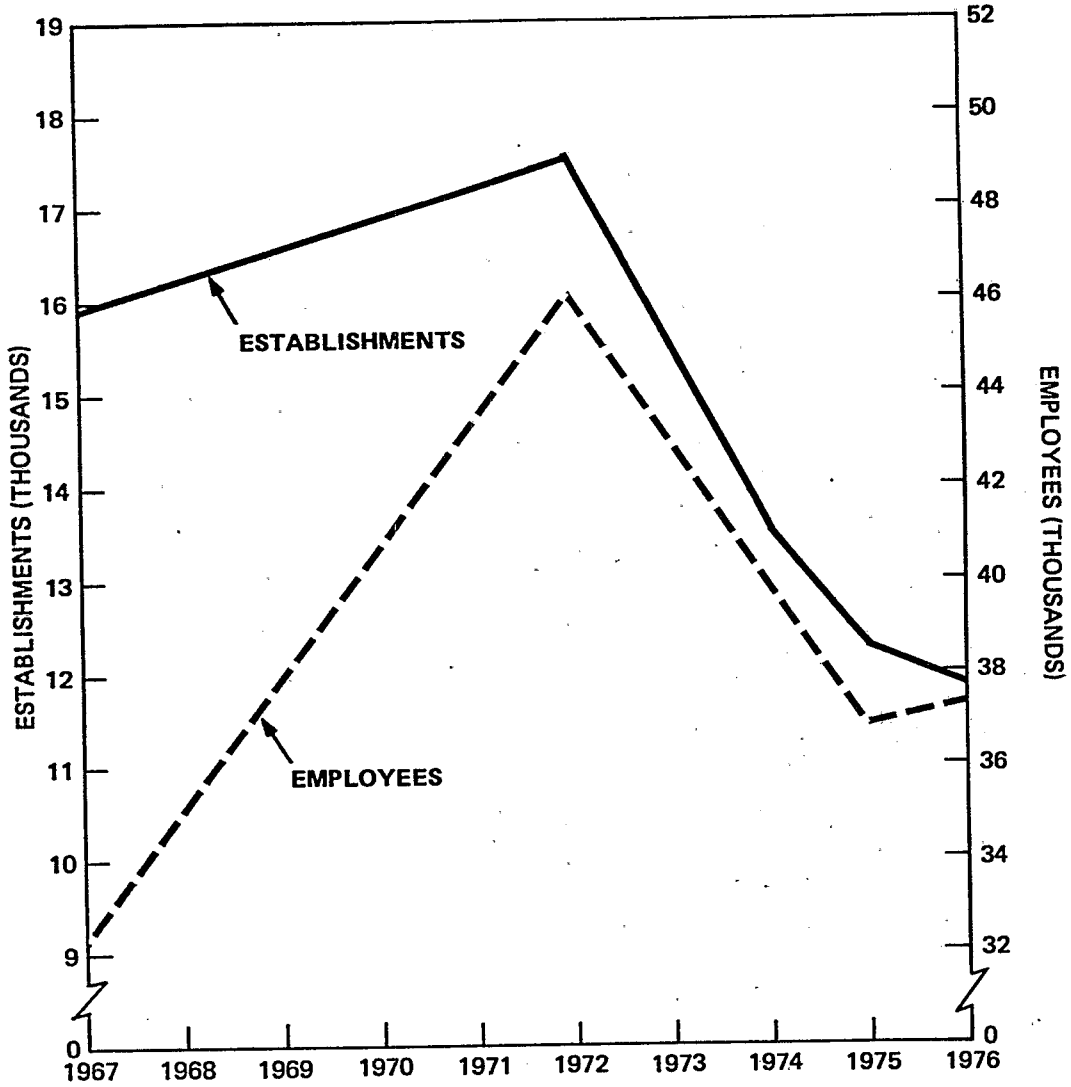

SOURCE: SEE TABLE 8-4.

Figure 8-1. Trends in number of establishments and employees for SIC 7215 (coin operated laundries and dry cleaners).

29 May 1979). Therefore, the single-unit dominated coin-op sector tends to show a decrease in establishments when the economy slumps.

8.1.3.2 The Commercial Sector. Table 8-4, plotted in Figure 8-2, shows that the number of establishments and of employees has been falling since 1967. The drop shows some indication of slowing by 1976. The trend can be explained partly by the use of larger capacity dry cleaning machines. Also, the years depicted cover a period during which washable synthetic fabrics were popular.

The demand for dry cleaning services, whether coin-op or commercial, depends on a number of factors. First, because dry cleaning is more a luxury or convenience than a necessity, demand for it will be affected by general economic conditions. When incomes or purchasing power declines, consumers will hand wash where possible and dry clean less often. In addition, it is generally the more expensive garments that require dry cleaning, and fewer of these are sold in bad times.

Clothing styles also affect demand for dry cleaning. During the past several years, a resurgence of natural fabrics such as wool, silk, and fine cottons has occurred. Even "designer" blue jeans are being dry cleaned to prevent fading and shrinkage. This trend is expected to increase dry cleaning demand in both the coin-op and commercial sectors (Gill, Ward, 26 April 1979) (Fisher, William, 26 April 1979).

The likelihood of consumers switching from commercial dry cleaning to less expensive coin-op dry cleaning during a recession is difficult to assess on a historical basis. The recession of the early 1970's coincided with the popularity of washable synthetic fabrics. As a result, dry cleaning revenues dropped in both sectors because of both factors. The effect of a recession alone cannot be measured. There is no evidence to suggest whether switching would result should a recession occur while natural fiber fabrics were prevalent. Industry sources in both sectors indicate, however, that it is their impression that such switching is unlikely (Gill, Ward, 26 April 1979) (Fisher, William, 26 April 1979).

Because both the economy and fashions are difficult to predict, no definitive growth rate can be attached to the commercial sector. It is relatively safe to assume that there will be no dramatic surge in number of establishments, employees or total receipts in the next 5 to 10 years.

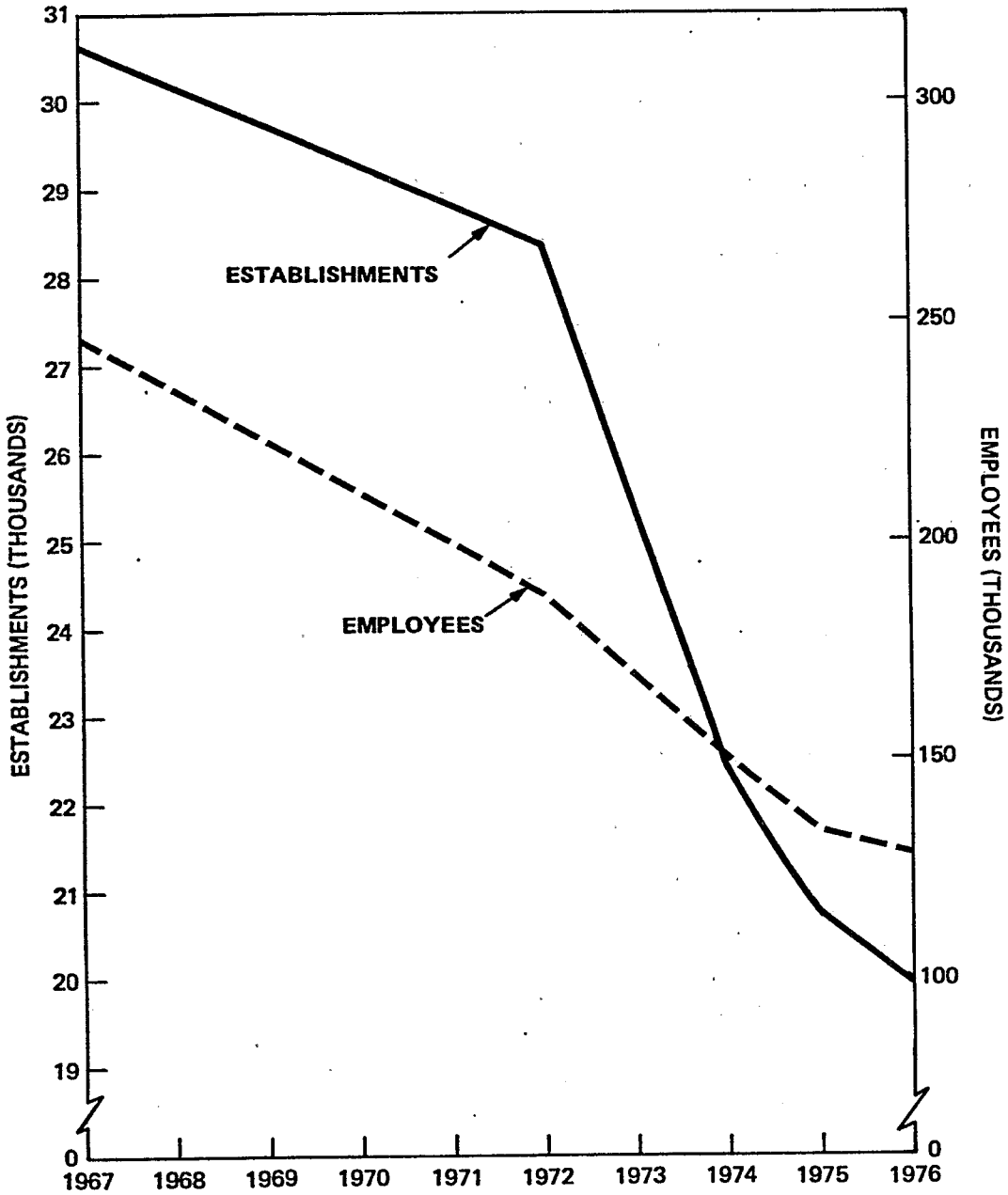

SOURCE: SEE TABLE 8-4.

Figure 8-2. Trends in number of establishments and employees for SIC 7216 (dry cleaning plants, except rug cleaners).

The consumer price index, a guide for determining relative prices based on a fixed reference price, reflects the rising cost of dry cleaning services. Shown below is the consumer price index, referenced to the 1967 dollar, for "dry cleaning, suits and dresses" from 1973 through 1977.

TABLE 8-5. CONSUMER PRICE INDEX

1973	1974	1975	1976	1977
122.0	135.9	150.6	160.6	171.0

(1967 = 100)

Source: U.S. Industrial Outlook, 1978, U.S. Department of Commerce, Washington, D. C., U.S. Government Printing Office, 1978, p. 461.

8.1.3.3 The Industrial Sector. The historical trends in the industrial sector show less dramatic changes than the other sectors. Total establishments have decreased overall between 1967 and 1976 (Figure 8-3), but annual changes in their number have never exceeded 5 percent and have averaged around 2 percent. This relative sluggishness is explained in part by the large initial investment required for the plant, the equipment, and, often, for the stock of uniforms, towels, or whatever else is being supplied. Again, the economy affects this part of the laundry industry. If expenses must be cut, a business that has previously had its uniforms professionally laundered may have employees wash the uniforms themselves. Alternatively the business may discontinue use of uniforms.

Recent trends in the sector include moves toward increased multi-plant ownership by single corporations. The industry has also felt competition from the commercial sector as some commercial businesses have expanded into industrial-type operations (Dees, E., 7 May 1979).

In the future, trends in the sector will probably occur slowly and remain small in magnitude. Any growth in receipts or number of establishments will be minimal.

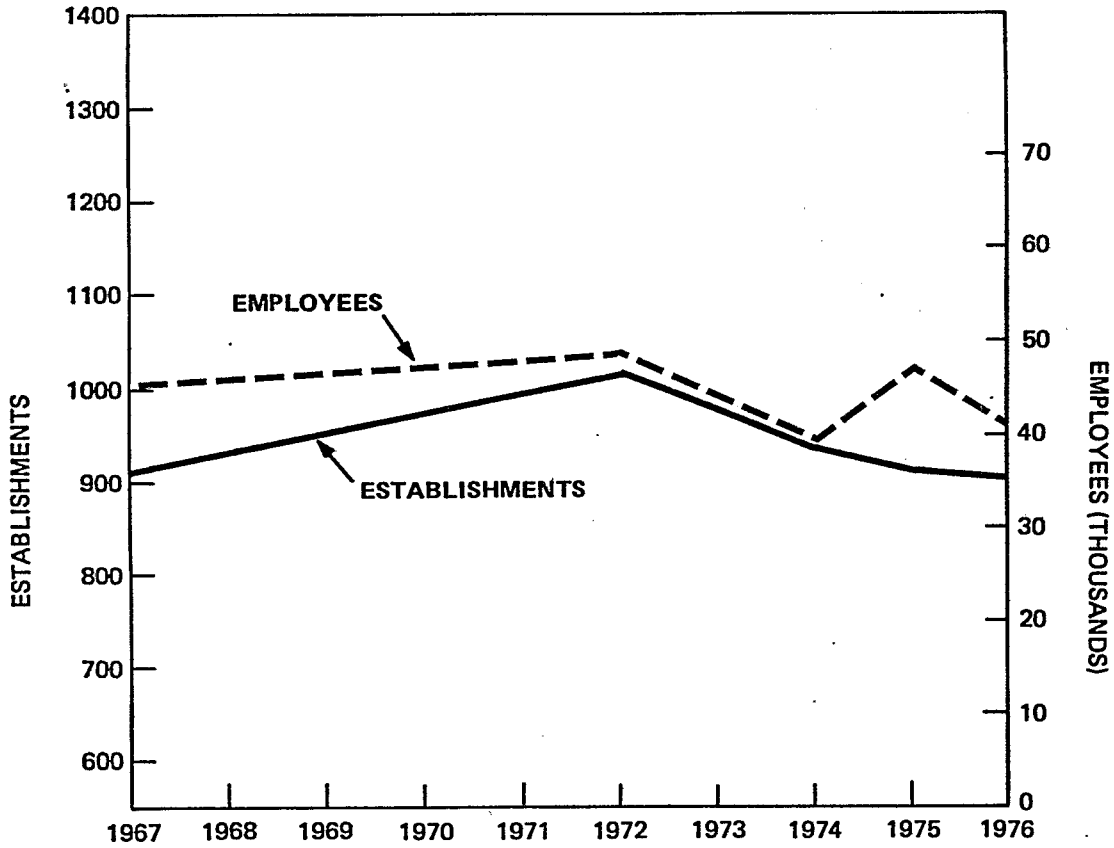

SOURCE: SEE TABLE 8-4.

Figure 8-3. Trends in number of establishments and employees for SIC 7218 (industrial launderers).

8.1.3.4 Geographic Trends. For the most part, geographic trends in the number of establishments in each sector mirror nationwide trends. Tables 8-6, 8-7, and 8-8 show figures for 1967, 1972, and 1976.

In the coin-op sector, compounded growth rates between 1972 and 1976 for various regions range between -8.4 percent and -12.4 percent. The same figure for the nation is -9.9 percent.

In the commercial sector, compounded growth rates between 1972 and 1976 range between -7.3 percent and -10.7 percent, and the national figure is -8.8 percent.

The industrial sector shows slower shrinkage, with most divisions experiencing growth for the same years as above in the range of -3.0 percent. The East South Central division actually gained two establishments whereas, the Mountain division showed a less than normal compounded growth of -9.1 percent.

8.1.4 Effect of Standard on Perchloroethylene Manufacturers

It is conceivable that the cost of meeting a standard on the use of perc could cause some dry cleaners to switch to another solvent. One result would be reduced perc sales.

Table 8-9 lists the eight perc manufacturers and their perc capabilities and shows the value of dry cleaning industry perc sales as a percentage of total sales. These results indicate that perc used for dry cleaning could represent no more than 3.4 percent of any company's sales, assuming its entire perc production was used for dry cleaning purposes. A drop in sales of perc would not be expected to impair any one company's performance appreciably.

8.1.5 Estimated New Sources for Each Industry Category

All new sources for the years 1977-1985 for the unregulated dry cleaning industry are estimated in Tables 8-10, 8-11, and 8-12. Though there are conflicting data on the growth rates for each segment of the industry, there does appear to be a small growth trend in the commercial and industrial sectors of the industry based on recent equipment manufacturers data (Quarterly Machinery Market Report, 30 September 1978). These data show an increase of about 12 percent per year in the number of dry cleaning machines being manufactured over the period 1974-1978. For

Table 8-6. COIN-OPERATED DRY CLEANERS AND LAUNDRIES, SIC 7215
REGIONAL TRENDS FOR NUMBER OF ESTABLISHMENTS

Region[a]	1967[b]	1972[b]	1976[c]
UNITED STATES	15,981	17,550	11,804
New England	717	782	558
Middle Atlantic	2,559	2,554	1,625
East North Central	3,606	3,981	2,774
West North Central	1,449	1,488	910
South Atlantic	2,445	2,998	2,054
East South Central	1,091	1,412	899
West South Central	2,052	2,130	1,413
Mountain	653	797	699
Pacific	1,409	1,408	962

[a]U.S. Census Regions

[b]Source: 1972 Census of Selected Services, U.S. Department of Commerce, Bureau of the Census

[c]Source: County Business Patterns, 1976, U.S. Department of Commerce

Table 8-7. DRY CLEANING PLANTS EXCEPT RUG CLEANING, SIC 7216
REGIONAL TRENDS FOR NUMBER OF ESTABLISHMENTS

Region[a]	1967[b]	1972[b]	1976[c]
UNITED STATES	30,625	28,422	19,953
New England	1,621	1,525	1,092
Middle Atlantic	6,188	5,625	3,848
East North Central	5,195	4,924	3,426
West North Central	2,347	2,074	1,348
South Atlantic	4,779	4,715	3,481
East South Central	2,163	1,977	1,370
West South Central	3,908	3,218	2,204
Mountain	1,140	1,097	820
Pacific	3,285	3,267	2,326

[a]U.S. Census Regions

[b]Source: 1972 Census of Selected Services, U.S. Department of Commerce, Bureau of the Census

[c]Source: County Business Patterns, 1976, U.S. Department of Commerce

Table 8-8. INDUSTRIAL LAUNDERERS, SIC 7218 REGIONAL TRENDS FOR NUMBER OF ESTABLISHMENTS

Region[a]	1967[b]	1972[b]	1976[c]
UNITED STATES	918	1,020	913
New England	58	54	69
Middle Atlantic	167	154	133
East North Central	197	196	181
West North Central	64	73	64
South Atlantic	128	156	148
East South Central	61	73	75
West South Central	101	122	107
Mountain	32	49	34
Pacific	110	143	124

[a]U.S. Census Regions

[b]Source: 1972 Census of Selected Services, U.S. Department of Commerce, Bureau of the Census

[c]Source: County Business Patterns, 1976, U.S. Department of Commerce

Table 8-9. RATIO OF MARKET VALUE OF PERCHLOROETHYLENE PRODUCTION TO TOTAL SALES IN 1977 FOR PERC-PRODUCING COMPANIES

	Plant capacity 1976[a] (Gigagrams/yr)	Market value of perc sold for dryclean-ing[b] (million $)	Total sales 1977[c] (million $)	Value of perc pro-duction as a % of total sales
Diamond Shamrock Corp.	90	17.29	1530.4	1.13
Dow Chemical, USA	131	25.16	6234.3	0.40
E.I. duPont de Nemours & Co., Inc.	72	13.83	9434.8	0.15
Ethyl Corp.	23	4.42	1282.1	0.34
Occidental Petroleum Corp.	18	3.46	6017.5	0.06
PPG Industries, Inc.	90	17.29	2505.8	0.69
Stauffer Chemical Co.	32	6.15	1232.8	0.50
Vulcan Materials Co.	90	17.29	510.6	3.39

[a]Stanford Research Institute, 1977, Director of Chemical Producers, Menlo Park, CA. 1978.

[b]This column derived as follows:

Plant capacity x percent capacity utilization x percent of perc production used for dry cleaning x market value of perc. Capacity utilization assumed to be 80 percent. Ratio of perc produced for dry cleaning to total perc production = 65 percent, based on 145.8 thousand megagrams dry cleaning per sales (Shamel, R. E., J. K. O'Neill, and R. Williams, 1975) (Chemical & Engineering News, June 12, 1978, p. 49). Market value of perc assumed to be $0.49 per kg.

[c]From published company records.

Table 8-10. ESTIMATED NEW SOURCES IN THE UNREGULATED PERCHLOROETHYLENE COIN-OP DRYCLEANING INDUSTRY

Year	Total plants[a]	Total machines[b]	Replacements[c]	All new sources[d]
1974	13,558	27,116	1,355	1,355
1975	12,358	24,716	1,235	1,235
1976	11,804	23,608	300	300
1977	11,804	23,608	300	300
1978	11,804	23,608	300	300
1979	11,804	23,608	300	300
1980	11,804	23,608	300	300
1981	11,804	23,608	300	300
1982	11,804	23,608	300	300
1983	11,804	23,608	300	300
1984	11,804	23,608	300	300
1985	11,804	23,608	300	300
1986	11,804	23,608	300	300
1987	11,804	23,608	300	300
1988	11,804	23,608	300	300
1989	11,804	23,608	300	300
1990	11,804	23,608	300	300

[a]1974-1976 data from County Business Patterns, U.S. Dept. of Commerce. No growth projected for this industry sector.

[b]2 machines/plant.

[c]Estimates from R. R. Street, 1 November 1979 (Young, Dexter, 1 November 1979).

[d]All new sources include machines from growth and replacement, and are assumed to be "affected facilities" as defined in Chapter 5.

Table 8-11. ESTIMATED NEW SOURCES IN THE UNREGULATED COMMERCIAL PERCHLOROETHYLENE DRY CLEANING INDUSTRY

Year	Total plants[a]	Replacement machines[b]	All new sources[c]	(75%) 11 kg	(25%) 23 kg
1974	15,634	284	284	213	71
1975	14,437	239	239	179	60
1976	13,911	338	338	254	85
1977	14,792	320	320	240	80
1978	14,925	435	435	326	109
1979	15,060	502	637	478	159
1980	15,195	506	641	481	160
1981	15,332	511	648	486	162
1982	15,471	516	655	491	164
1983	15,610	520	659	494	165
1984	15,750	525	665	499	166
1985	15,891	530	671	503	168
1986	16,035	534	678	509	170
1987	16,179	539	683	512	171
1988	16,324	544	689	517	172
1989	16,470	549	695	521	174
1990	16,619	554	703	527	176

[a]1974-1976 data from County Business Patterns, U.S. Department of Commerce. 1974-1976 years averaged - 14,661 (base number). 1977-1985 data based on 0.9 percent growth from base number. A 0.9 percent growth is the expected population growth according to the Argonne National Laboratory report prepared for EPA-450/3-78-019.

[b]Economic life of plants = 30 years.
100 percent depreciation in 30 years.
Replacement rate is 100 percent/30 = 3.33 percent.
Replacements from 1974 to 1978 are actual machine sales data from a quarterly machinery market report compiled by Ernst and Ernst for the Laundry and Cleaners Allied Trade Association. Also from this source, commercial model plants were divided into 75 percent, 11 kg and 25 percent, 23 kg machines.

[c]All new sources include machines from growth and replacement, and are assumed to be "affected facilities" as defined in Chapter 5.

Table 8-12. ESTIMATED NEW SOURCES IN THE UNREGULATED PERCHLOROETHYLENE INDUSTRIAL DRYCLEANING INDUSTRY

Year	Total plants[a]	Replacement machines[b]	All new sources[c]
1974	237	8	8
1975	233	8	8
1976	233	8	8
1977	235	8	10
1978	237	8	10
1979	239	8	10
1980	241	8	10
1981	243	8	10
1982	245	8	10
1983	247	8	10
1984	249	8	10
1985	251	8	10
1986	253	8	10
1987	256	9	11
1988	258	9	11
1989	260	9	11
1990	262	9	11

[a]1974-1976 data from County Business Patterns, U.S. Department of Commerce. 1974-1976 years averaged - 234 (base number). 1977-1985 data based on 0.9% growth from base number. A 0.9% growth is the expected population growth according to the Argonne National Laboratory report prepared for EPA-450/3-78-019.

[b]Economic life of plant = 30 years.
100% depreciation in 30 years.
Replacement rate = 100%/30 = 3.33%

[c]All new sources include machines from growth and replacement and are assumed to be "affected facilities" as defined in Chapter 5.

this analysis, an overall growth rate of 0.9 percent was assumed for commercial and industrial dry cleaners. Coin-op dry cleaners were assumed to have a zero growth rate. A replacement rate of 300 units per year was used, based on industry data (Young, Dexter, 1 November 1979). A replacement rate for the commercial and industrial sectors of 3.3 percent was assumed using an economic plant life of 30 years with 100 percent depreciation after 30 years. The growth rate was assumed based on the Argonne National Laboratory report (Monarch, M. R. et al., April 1978). The heading "All new sources" in Tables 8-10, 8-11, and 8-12 includes machines from both growth and replacement. It will be assumed that "all new sources" are subject to the NSPS as described in Chapter 5.

8.2 COST ANALYSIS OF CONTROL OPTIONS

8.2.1 Introduction

The estimated costs of applying the control techniques specified for each industry category for each control option have been developed and are given in this section. These costs are based on the model plant parameters given in Chapter 6 and include both capital expenses and annualized costs. Section 8.2.2 gives the estimated costs for new affected facilities and section 8.2.3 gives the costs for modified or reconstructed facilities.

In developing these costs for the model plants, cost data on the equipment specified were obtained from equipment vendors or manufacturers and were combined with estimates of installation costs from the same sources to obtain the estimates of capital expenditures for each control option. Note that these capital costs are in fourth quarter 1978 dollars and should be adjusted for inflation when necessary.

Annualized costs are composed of amortized capital costs and operated costs. The amortization of capital costs is accounted for by using a capital recovery factor of 17.15 percent. This factor was computed by using an interest rate of 10 percent for the 15-year life of the equipment with an additional 4 percent added for taxes, insurance, and administration costs. For higher interest rates, the capital recovery factors would vary (e.g., at 12 percent interest, it would be 18.68 percent, and, at 15 percent interest, it would be 21.10 percent). Capital costs include

the costs of control equipment and its installation. Operating cost for the controlled model plants have been estimated from data obtained from the equipment vendors and/or manufacturers. These costs include the cost of electricity, maintenance of the control system, and the cost of steam. Estimates of the unit cost for electricity, steam, and operating labor were taken as $0.0126/10^6$ J, $7.30/1000 kg ($3.30/1000 lbs) and $8.00/hour, respectively. Maintenance costs were estimated by equipment vendors (Hansen, Lyle, 5 December 1978).

In addition to these costs, the use of carbon adsorbers also produces a credit for solvent recovered. Credit for recovered solvent is deducted from the annualized costs at the rate of $0.50/kg ($3.00/gal).

8.2.2 New Facilities

8.2.2.1 Coin-Operated Dry Cleaners. For coin-operated dry cleaners, option 1 would essentially require the use of a nonphotochemically reactive solvent. At present, this means that F-113 machines would have to be used instead of perc machines.

Costs for this option were developed as follows.

Equipment vendors were contacted for costs of F-113 machines that could be used instead of the model coin-operated perc operation (McMonagle, Ray, 20 August 1979) (Davis, Durwood, 19 August 1979). Since machines in the 3.5-kg size are not available, a 5.4-kg/load machine was costed.

Though two 5.4-kg F-113 machines have a higher throughput capability than the 3.6-kg perc machines, two machines will still be used, since, for these customer-operated machines, availability will be as important as capacity. The costs given in Table 8-13 show the additional costs that would be incurred by a plant owner purchasing and using two F-113 dry cleaning machines versus two perc machines.

Under control option 2, coin-operated dry cleaners would not be required to install any additional equipment. Only proper solid waste treatment and good operating and maintenance practices would have to be followed for this option. No incremental costs for housekeeping controls have been developed since these costs are apparently negligible.

Although not a control option for perc coin-op dry cleaners, carbon adsorption was also costed to establish any economic advantage to that

Table 8-13. COST OF CONTROL TECHNOLOGY COIN-OPERATED, OPTION 1
(1000's of fourth quarter 1978 $)

	3.6 kg perc	5.4 kg F-113
Capital cost		
Cost of two dry cleaning machines	8.9	27.4
Installation cost	0.2	0.2
	9.1	27.6
Annualized cost		
Capital Recovery	1.56	4.73
Operating Costs:		
Steam	--	--
Electricity[a]	0.05	0.23
Maintenance[b]	0.05	0.05
Labor[b]	1.00	1.00
Solvent[c]	0.53	0.91
Net Annualized Cost	3.2	6.9
Difference in Cost for F-113 Machines		3.7

[a]Based on the model plant throughout with 4.1 MJ load for 3.6 kg perc machines and 7.2 MJ for 5.4 kg F-113 machines.

[b]Estimated.

[c]Extra cost of F-113 solvent versus baseline perc usage rate.

type of control. From the following analysis, it was concluded that this control technique was not economically feasible for this industry category. However, to ensure completeness, this analysis is included here as a reference.

First, using manufacturer's literature (VIC Brochure, "Mileage Boosters," December 1978), a carbon adsorber was chosen for minimum capital cost commensurate with the requirements for controlling emissions. Since these carbon adsorbers must be desorbed with steam, a boiler of sufficient capacity was also included in the capital costs (Blythe, Bob, 5 December 1978). The requirements for steam and cooling water were taken from the manufacturer's brochure (VIC Brochure, "Mileage Booster", December 1978) though the cost of the cooling water requirements was considered negligible. Table 8-14 gives the individual costs for this application of carbon adsorption. Note that labor costs are taken as 2 hours per desorb cycle (i.e., once per 5 days). Through the desorb should take only about one hour, the boiler at such an installation would not normally be in operation, therefore, an extra hour is needed to allow for boiler start-up and shut-down.

The net annualized cost of control is about $2,100 per year. For the model plant the annual profit, at $0.22 per kg ($0.10/lb), is less than $2,000 per year. Therefore, this control technique is not considered feasible.

Another possible approach to applying carbon adsorption to coin-ops is the use of off-site regeneration of the carbon in the adsorber. Canisters containing carbon are presently available for odor control applications that could possibly be used at coin-operated facilities. This would eliminate the requirement for a boiler at coin-operated facilities thereby reducing the capital costs of control. However, additional annual costs would be incurred for pick-up and delivery of canisters to be regenerated. The actual desorption of the carbon would be more expensive than on-site regeneration, since the canisters would have to be opened, the carbon removed, desorbed, then the carbon would have to be replaced and the canisters resealed before reuse. At present, few facilities for the desorption of carbon in bulk are available; hence,

Table 8-14. COST OF CONTROL TECHNOLOGY EVALUATION OF APPLYING CARBON ADSORPTION TO COIN-OPS (1000's of fourth quarter 1978 $)

Capital costs	
Carbon Adsorber	2.5
Carbon Adsorber Installation	0.4
Boiler and Oil Tanks	3.4
Installation	0.3
Total Capital Costs	6.6
Annualized costs	
Capital Recovery	1.13
Operating Costs:	
Steam	0.03
Electricity	0.02
Maintenance	0.05
Labor	1.17
Annualized Costs	2.40
Credit for Recovered Solvent	(0.31)
Net Annualized Costs	2.1

actual costs are not known. However, at least one manufacturer (Manzone, 21 December 1978) believes that a dry cleaner would find economic advantage in installing a boiler for on-site desorption and supplying additional services made possible by the availability of steam. Because of these considerations, off-site regeneration will not be considered further.

8.2.2.2 Commercial Dry Cleaners. Two control options have been considered for the commercial segment of the dry cleaning industry. Option 1 would require the use of nonphotochemically reactive solvents for dry cleaning while option 2 would require the use of a carbon adsorber on all perc operations in this industry category.

Capital costs for the dry cleaning machines themselves are available from vendors and manufacturers. However, to provide an accurate comparison of model plant capital costs, the equipment costs must be adjusted to a common production capability for each model plant. For instance, an F-113 machine of a given load capacity would have a higher production capability than a perc dry-to-dry unit of the same capacity because of the F-113 machine's shorter cycle time. Similarly, a perc transfer system of the same load capacity would have a higher production capability than either the F-113 or the perc dry-to-dry machine since the separate transfer machines can be used simultaneously for washing and drying. Due to these differences in production capability and to the fact that costs for each type of machine were not available in the load capacities specified for the model plants, adjustments to these costs were necessary to develop the model plant costs for the control options considered.

These adjustments to the capital cost of the dry cleaning equipment were obtained by normalizing the capital cost of each type of equipment to the capital cost of a perc transfer operation. Perc transfer equipment was chosen as the basis for these adjustments since it represents the lowest cost-per-unit production capability.

The comparisons between these capital costs, then, is based on the cost of equivalent production capability. In practice, this adjustment of capital cost can be made by using the following equation:

$$\text{Adjusted Capital Cost} = \text{Actual Capital Cost} \times \frac{\text{Model Plant Capacity}}{\text{Actual Machine Capacity}} \times$$

$$\frac{\text{Actual Cycle Time}}{\text{Perc Transfer Cycle Time}}$$

As an example of the use of this equation, consider the costs for an 11-kg dry-to-dry machine. From Table 8-15, the actual cost of an 11-kg dry-to-dry machine is approximately $17,000, and, from Table 6-1, the cycle time of commercial dry-to-dry machines is 57 minutes and for commercial transfer systems is 35 minutes. Using the above equation, the adjusted capital cost of the 11 kg, dry-to-dry perc system is found as follows:

$$\text{Adjusted Capital Cost} = \$17{,}000 \frac{11 \text{ kg}}{11 \text{ kg}} \times \frac{57 \text{ minutes}}{35 \text{ minutes}}$$

$$= \$28{,}000 \text{ (to the nearest thousand dollars).}$$

Use of the above equation gives adjusted costs for the individual types of equipment. However, to establish a cost for the perc machines in a representative model plant, an average of the adjusted capital costs for the dry-to-dry and transfer systems is needed. The approach used here is to weight the costs according to the percentage of the industry category now serviced by each type of equipment. The weighted average, then, is 25 percent of the cost of dry-to-dry equipment ($28,000) from the above calculation plus 75 percent of the cost of the transfer system ($19,000 from Table 8-15 for 11 kg transfer).

These adjusted model plant capital costs are listed in Table 8-16. Estimates of capital costs for the carbon adsorber were taken from contacts with vendors and equipment manufacturers (Hansen, Lyle, 5 December 1978).

The annualized costs for these two control options are composed of the capital recovery and the operating costs. Capital recovery is a percentage of the capital costs for the system plus control equipment taken as 17.15 percent from the combination of 10 percent interest on a loan over the 15-year life of the equipment plus 4 percent for taxes, administration, and insurance.

Operating costs are the costs for operation and maintenance of the control system only. Steam is required for carbon adsorbers to desorb captured perc and thus is not required for option 1 or for the uncontrolled system. Electricity costs for option 1 are the costs of extra electricity

Table 8-15. APPROXIMATE CAPITAL COSTS OF DRY CLEANING MACHINES

Type of machine	Approximate costs (1000's of fourth quarter 1978 $)
11 kg transfer	19
11 kg dry-to-dry	17
23 kg transfer	21
23 kg dry-to-dry	24
14 kg F-113	17

Table 8-16. COST OF CONTROL COMMERCIAL DRY CLEANERS OPTION 1 AND OPTION 2
(1000's of fourth quarter 1978 $)

	11 kg (25 lb)			23 kg (50 lb)		
	Option 1[a]	Option 2[b]	No control	Option 1[a]	Option 2[b]	No control
Capital Cost						
Adjusted Capital Cost of dry cleaning equipment	20	21	21	40	26	26
Capital Cost of Carbon Adsorber	--	4	--	--	4	--
Total Capital Cost	20	25	21	40	30	26
Annualized Cost						
Capital Recovery	3.4	4.3	3.6	6.9	5.1	4.5
Operating Costs[c]						
Steam	--	0.02	--	--	0.04	--
Electricity	0.06	0.07	--	0.13	0.07	--
Maintenance	0.05	0.08	--	0.05	0.08	--
Labor	--	0.06	--	--	0.12	--
Solvent[d]	0.72	--	--	1.44	--	--
Gross Annualized Costs	4.2	4.5	3.6	8.5	5.4	4.5
Credit for Recovered Solvent	--	(0.32)	--	--	(0.64)	--
Net Annualized Cost	4.2	4.2	3.6	8.5	4.8	4.5
Actual Annualized Cost[e] for Emission Control	0.6	0.6	--	4.0	0.3	--

[a]Option 1 requires the use of a non-photochemically reactive solvent. For this cost analysis, F-113 equipment was costed.

[b]Option 2 requires the use of a carbon adsorber.

[c]Operating costs for option 1 represent only the costs over and above the costs for an uncontrolled perc system; for option 2 the operating costs are for operation of the carbon absorber.

[d]Extra cost of F-113 solvent versus baseline perc usage rate.

[e]Net annualized cost of emission control.

usage by F-113 equipment compared to the average of perc dry-to-dry and transfer operations processing the amount of clothes given in the model plant parameters (Table 6-1). Maintenance estimates were extrapolated from estimates obtained from equipment vendors (Blythe, Bob, 5 December 1978). Labor costs were estimated as requiring 0.2 hours for each desorb. The time allotted for each desorb for this industry category is less than that required for the coin-op category since the boiler would normally be in operation and the operator would not have to give his entire attention to the desorb operation. Cooling water for the condenser on carbon adsorbers would also be an operating cost, however; in this case the cost is considered negligible.

In addition to the cost of operation, carbon adsorbers also produce an operating credit for solvent recovered during the desorption process. For these estimates, an average of 5 kg of perc is assumed to be recovered for each 100 kg of clothes processed, based on plant test data summarized in Table 3-1.

8.2.2.3 Industrial Dry Cleaners. Options 1 and 2 would apply the same regulations on the industrial category. Therefore, for both options 1 and 2, the cost data is given in Table 8-17. As can be seen in that table, the value of the recovered perc exceeds the cost of the carbon absorber system by a substantial margin. These cost numbers are based on recovering 8.1 kg of perc for each 100 kg of clothes processed as was the case in an EPA test of an industrial dry cleaner (Kleeberg, C. F., 17 March 1976). For the model plant, this amount of recovered solvent would require six desorbs of carbon canisters having a maximum of 4 gallons of perc in each. The required labor is 0.2 hours per desorb at $8.00 per hour, since boiler operations are normally required for the dry cleaning plant, and the desorb cycle would require only minimal additional attention from the operator.

8.2.3 Modifications and Reconstructions

8.2.3.1 Introduction. Since regulations promulgated for new sources also affect sources that are modified or reconstructed, this section describes the costs of control for sources covered by these provisions of the regulations. Assumptions used in developing the annualized costs for the sources are the same as for new facilities described in section 8.2.1.

Table 8-17. COST OF CONTROL TECHNOLOGY INDUSTRIAL
(1000's of $)

Capital Costs	
Carbon Adsorber	11.1
Installation	0.6
Total Capital Costs	11.7
Annualized Costs	
Capital Recovery	2.0
Operating Costs:	
Steam	0.77
Electricity	0.18
Maintenance	0.10
Labor	2.40
Annual Costs	5.5
Credit for Recovered Solvent	(18.6)
Net Annual Cost (Profit)	(13.1)

Note that modfications and reconstruction do not exist for the coin-op segment of the industry because each dry cleaning machine can only be a separate system. Thus, additional dryers or larger individual components cannot be used.

8.2.3.2 Modifications. The modifications described in Chapter 5 have been costed in the same manner as for new sources. Under option 1, no modifications, as defined in Chapter 5, are possible due to the required change in solvent. Under option 2, two possibilities were discussed. Those modifications are costed as follows.

Adding a dryer to an existing dry-to-dry operation was the first type of modification discussed, and the cost for controlling that type of modification to a commercial plant is given in Table 8-18. Note that these costs are the same as for new commercial facilities with the exception of a slight additional cost for installation to account for retrofit expenses.

Though these annualized costs of control are similar to the costs of control for new facilities, the capital costs of the new dry cleaning equipment used to modify an existing facility is, of course, much less than the cost of an entirely new dry cleaning plant. For instance, in this case the capital cost of a new dryer would be in the range of $3,000 to $4,500. The cost of the carbon adsorber at $4,100 then would nearly double the capital expenditure required for this type of modification. Capital costs of control of new facilities, on the other hand, represent less than 10 percent of the capital cost of a new plant.

Similarly, for the industrial segment of the industry, Table 8-19 shows the additional expense of controlling an industrial plant modified to use a dryer with a dry-to-dry machine. The capital cost of the equipment used to modify the facility, a 113 kg (250 lb) dryer, would be in the vicinity of $40,000 (TRW, 7 May 1976). Therefore, capital expenditures for controlling a modified facility in this industry category are not as great a percentage of the capital cost of modifying the facility as was the case for the commercial category.

Another possible modification to existing plants could occur if an existing washer or dryer were replaced with a larger model. The estimated

Table 8-18. CONTROL COSTS FOR MODIFYING COMMERCIAL PERC DRY CLEANER
(1000's of fourth quarter 1978 $)

	11 kg (25 lb)	23 kg (50 lb)
Capital costs		
Cost of Carbon Adsorber plus Installation	4.1	4.1
Total Capital Cost	4.1	4.1
Annualized costs		
Capital Recovery	0.7	0.7
Operating Costs:		
Steam	0.02	0.04
Electricity	0.07	0.07
Maintenance	0.08	0.08
Labor	0.06	0.12
Gross Annualized Cost	0.9	1.0
Credit for Recovered Solvent	(0.32)	(0.64)
Net Annualized Cost	(0.6)	(0.4)

Table 8-19. CONTROL COSTS FOR MODIFYING INDUSTRIAL PERC DRY CLEANERS
(1000's of $)

Capital costs	
Carbon Adsorber	11.1
Installation	0.7
Total Capital Cost	11.8
Annualized costs	
Capital Recovery	2.0
Operating Costs:	
Steam	0.77
Electricity	0.18
Labor	2.40
Maintenance	0.10
Gross Annualized Cost	5.5
Credit for Recovered Solvent	(18.6)
Net Annualized Cost	(13.1)

costs for this type of modification are similar to the previous example for adding a dryer to an existing dry-to-dry installation (see Tables 8-18 and 8-19). This estimate is based on the fact that both installations would be transfer operations and, due to retrofit considerations, installation costs are expected to be slightly greater than for a new installation.

8.2.3.3 Reconstructions. Cost for reconstruction under option 1 for the coin-op and commercial categories cannot be calculated because under this option reconstruction as a perc system is not allowed. Reconstruction of these plants would require the conversion to non-photochemically reactive solvent usage which would then be considered a new plant. These costs are then the same for similar new sources and are given in Table 8-16 for commercial facilities. For the industrial category under option 1, the cost of control for a reconstructed plant will be similar to the costs for a modified facility as given in Table 8-19.

Reconstruction of coin-ops under option 2 does not apply to any additional costs since this option requires only improved housekeeping procedures. For the commercial and industrial categories, two types of reconstruction were identified in Chapter 5; they were the replacement of a dry-to-dry machine without replacing peripheral equipment and the replacement of a sufficient quantity of equipment in a transfer operation to exceed the 50 percent of capital cost requirement in the definition of reconstruction.

The cost of control for reconstructions will be similar to the costs given for modifications in Table 8-18 for commercial facilities and in Table 8-19 for industrial facilities. Since the capital costs of the dry cleaning equipment being replaced at a reconstructed facility must, by definition, exceed 50 percent of the capital cost of an equivalent new facility, the capital burden for a reconstructed facility will be at worst only twice the capital burden for a new facility.

8.2.4 Cost Effectiveness of Controls

The cost effectiveness of the controls specified for each industry category under each control option has been calculated to show the cost per unit of emission reduction. These cost effectiveness numbers were

obtained by dividing the cost of control by the emission reduction obtained. For option 1 in coin-op and commercial facilities, the emission reduction was the total baseline emissions since option 1 required the use of a non-photochemically reactive solvent. Cost effectiveness for options requiring the use of a carbon adsorber was calculated by dividing the cost of control by the emission reduction from baseline.

In general, the cost effectiveness for option 2 shows that the costs for operating a carbon adsorber decrease as production capacity increases. Industrial dry cleaners actually show a profit from the use of carbon adsorbers (option 1 and option 2 are the same for industrial dry cleaners). Profits are generated by the credit for reclaimed solvent at the usual cost of $0.50/kg of perc ($3.00/gal), in dollars per unit of emission reduction. Table 8-20 shows the cost effectiveness for the control options given for perc dry cleaning.

Option 1 for the coin-op and commercial categories shows that the costs for coin-op and large commercial facilities are almost the same, while the small commercial facilities show a profit from applying control. Greater costs are incurred for the large commercial facility in this case due to the use of two F-113 machines instead of one perc machine. For the smaller commercial facility, only one F-113 machine was necessary to maintain the production of the perc equipment. Thus, the economies of scale that would be expected in going from a small to a large commercial facility do not apply.

The 1984 cost effectiveness for each control option can be calculated by dividing the 1984 annualized cost resulting from regulation found in section 8.2.5 by the emission reduction for 1984 found in Table 7-1. The cost effectiveness for option 1 and option 2 is $933 per unit of emission reduction and $192 per unit of emission reduction, respectively.

8.2.5 Total Cost of Controls

The total cost of the control alternatives is presented in Table 8-21. This provides an estimate of the additional capital burden imposed on new plants from 1980 to 1984. (Total capital costs are found by multiplying the number of new plants by the capital cost per plant for each sector.) Annualized cost totals represent those payments incurred in the fifth

Table 8-20. COST (PROFIT) EFFECTIVENESS OF CONTROLS FOR THE PERCHLOROETHYLENE DRY CLEANING INDUSTRY ($ per unit emission reduction)

		Option 1		Option 2	
		megagram	ton	megagram	ton
Coin-op		2,570	2,331	--	--
Commercial	11 kg	445	404	579	525
	23 kg	1,420	1,288	138	125
Industrial		(321)	(291)	(321)	(291)

Table 8-21. AGGREGATE COSTS OF CONTROLS ON DRY CLEANING INDUSTRY
Costs (Profits) in 1000's of 1978 Dollars

	Coin-op	Commercial 11 kg	Commercial 23 kg	Industrial	Total
		Option 1			
Total no. of model plants[a]	750	2,451	817	50	4,068
No. of model plants with control baseline case[a]	0	0	0	25	25
No. of model plants incurring costs as result of standard[a]	750	2,451	817	25	4,043
Total capital costs resulting from regulation[b]	13,875	(2,451)	11,438	293	23,155
1984 Annualized Cost resulting from regulation	2,775	1,471	3,268	(328)	7,186
		Option 2			
Total no. of model plants[a]	750	2,451	817	50	4,068
No. of model plants with control baseline case[a]	0	858	286	25	1,169
No. of model plants incurring costs as result of standard[a]	750	1,593	531	25	2,899
Total capital costs resulting from regulation[b]	0	4,779	2,124	293	7,196
1984 Annualized Cost resulting from regulation	0	956	159	(328)	787

[a]Cumulative number of plants 1980-1984.

[b]Incremental capital expense imposed on all plants 1980-1984 as a result of controls.

year, 1984. Pre-tax annualized costs are used here to reflect the total cost to the economy.

In calculating the total costs associated with option 2 for commercial, and options 1 and 2 for industrial plants, it was assumed that under baseline conditions 35 percent of the commercial and 50 percent of the industrial plants would use controls. Thus, the incremental cost is applied only to the remaining 65 percent and 50 percent of the expected plants that would normally use the carbon adsorber.

In the coin-op sector, the sale of 1,500 new machines is expected between 1980 and 1984. With two machines per plant, this represents 750 new plants. The 1984 annualized cost is about $2.7 million. Option 2 imposes no additional capital or annualized costs.

In the commercial sector, 2,451 plants of 11 kg capacity and 817 plants of 23 kg capacity are expected between 1980 and 1984. With option 1, the 11 kg machine group incurs a total capital savings of $2.4 million, while the 23 kg machine group incurs a total capital cost of $11.4 million. This option creates an incremental capital cost of $9.0 million to the commercial sector. The 1984 annualized cost of option 1 is $3.2 million for the 23 kg group, plus $1.5 million for the 11 kg group, or about $4.7 million total cost for the commercial sector.

With option 2, capital costs increase by $4.8 million for the 11 kg group, and $2.1 million for the 23 kg group, giving a total capital cost of $6.9 million for the commercial sector. This is less expensive than option 1. The 1984 annualized costs for option 2 increased $1.0 million for the 11 kg group and $0.2 million for the 23 kg group, resulting in a 1984 annualized cost increase of $1.2 million for the commercial sector. Again, this is less than the $4.7 million annualized cost imposed by option 1 during that period.

Option 1 and option 2 impose the same costs on the industrial sector. The incremental capital cost of these controls totals $0.3 million. The annualized savings, due to solvent recovery credits, would total $0.3 million for 1984.

In summary, option 1 imposes a total capital cost of $23.2 million on the dry cleaning industry between 1980 and 1984. The 1984 annualized

costs (which include capital recovery) are $7.2 million. This is clearly below the regulatory action criterion of $100 million in the first five years.

With option 2, total industry costs are somewhat lower. Total capital costs are $7.2 million and 1984 annuzlied costs are $0.8 million.

8.3 OTHER COST CONSIDERATIONS

In this section, three things are discussed: the costs currently imposed on the perchloroethylene dry cleaning industry to satisfy other regulatory requirements, the impact of new source standards promulgation on state and local regulatory and enforcement agencies, and the costs for compliance testing if a concentration type standard had been chosen.

In December 1978, a Control Techniques Guideline Document on Control of Volatile Organic Emissions from Perchloroethylene Dry Cleaning Systems was issued by EPA. This document provides information to state and local air pollution control agencies on reasonable available control technology (RACT) that can be applied to existing perchloroethylene dry cleaning systems. RACT is defined as the lowest emission limit that a particular source is capable of meeting by the application of control technology that is reasonably available considering technological and economic feasibility. Control techniques guidelines would mainly be used by states in those areas where National Ambient Air Quality Standards (NAAQS) are not being attained. Some State solvent emission regulations covering dry cleaning plants are based on the Los Angeles AQMD Rule 442, "Usage of Solvents" (formerly Rule 66), or on the control of hydrocarbons alone. Under this type of regulation, perc is an exempt solvent since it was not considered to be photochemically reactive; therefore, there are few emission limitations. Hence, existing State solvent emission regulations create only a minimal impact for perc dry cleaning establishments.

Also affecting these nationwide emissions estimates would be any emission reduction attributable to State or local regulations. Revised State Implementation Plans (SIP) that may incorporate the recommendations in the CTG on perc dry cleaners are due to be submitted to the Administrator by July 1, 1980. Not all States are required to submit SIP revisions, nor are all regions in each State necessarily affected by SIP revisions.

Changes in baseline perc emissions due to the SIP revisions would lower the emission reduction attributable to the New Source Performance Standard, thereby, apparently reducing the necessity for the New Source Performance Standard. However, this CTG for perc dry cleaners would be required only in those areas with a population of 200,000 or more that cannot achieve the National Ambient Air Quality Standard (NAAQS) for photochemical oxidants by 1987. Therefore, no alteration to baseline emissions due to State regulations has been made.

Perc plants have little potential for causing water pollution, and are currently under no water pollution control guidelines.

Similarly, there are relatively small amounts of solid waste resulting from the dry cleaning process so disposal costs are minimal. Therefore, no significant cost impacts would be expected from either water quality or solid waste regulations.

The principle controls currently being imposed on perc plants are the Occupational Safety and Health Administration (OSHA) restrictions for solvent vapors in the working environment. The allowable time-weighted average (TWA) perc levels in working areas are as follows:

- 100 ppm - 8 hour TWA
- 200 ppm - Ceiling (may be exceeded only once every 3 hours for no more than 5 minutes)
- 300 ppm - Peak; never to be exceeded.

Solvent emission controls for perc dry cleaning establishments already exist to a large extent. This emission control has developed out of economic necessity rather than environmental regulation. Perchloroethylene is an expensive solvent, and its recovery is necessary for the most economical operation. It is for this reason that reclaiming dryers are used on most perc machines. Also many perc systems are equipped with carbon adsorbers. Carbon adsorbers are now being utilized by about 35 percent of the commercial systems and 50 percent of the industrial systems. Carbon adsorbers are not considered feasible for use in coin-op systems because usually there is no boiler on the premises to supply the steam necessary to desorb the carbon bed.

The burden of enforcement for new source standard falls on State and local agencies. States must adopt regulations for the pollutant and

secure EPA approval of an enforcement plan. The ongoing responsibilities of State and local agencies include permit issuance and compliance verification for new sources. The agencies must also periodically provide reports on the compliance status of new sources and on legal matters pertaining to them.

Many costs would be incurred on a dry cleaner if a dryer exhaust concentration standard, rather than an equipment standard, were chosen. In order to ascertain compliance with such a concentration limit, an initial performance test to determine the dryer exhaust concentration would be required costing $2,000-$4,000. The concentration standard was not chosen because of the high cost of this initial performance test.

No recordkeeping of solvent mileage will be required by the draft standard since the manpower cost for enforcing such a recordkeeping system is too high. This would also not be in the spirit of regulatory reforms, and mileage records alone do not indicate compliance with a requirement to install a carbon adsorber.

8.4 ECONOMIC IMPACT

8.4.1 Introduction

The economic effect of the two alternative control options will be discussed in the following sections. The primary aim of these discussions will be to show the effect of perchloroethylene controls on plant profitability, capital requirements, and return on investment (ROI) in order to evaluate whether new perchloroethylene plants would be pre-empted from entering the industry.

Section 8.4.2 provides supplemental industry profile data and model plant financial characteristics which are derived primarily from industry sources and Bureau of the Census data. Section 8.4.3 describes the economic impacts of controls on the four model plants. This section addresses both new and modified/reconstructed plants. Capital availability issues are described in section 8.4.3.2. Effects of controls on profitability and ROI are explored in sections 8.4.3.3. Finally, section 8.4.3.4 provides an estimate of the changes in industry growth which would result from the controls.

The analysis is centered on the characteristics of the four model plants. Although these model plants are representative of the industry and serve to reflect the typical condition of new plants, it is important to recognize that variation does occur. Prices may vary regionally and capital investment can be reduced in some cases by using old equipment. Thus, some plants would have more favorable economics than shown here, while some would have greater constraints. While limitations of the data prevent the estimation of the distribution of real conditions, it is important to remember that a variety of conditions do occur. The figures presented here are thought to be representative, but an individual investor could find substantially different conditions.

The data presented here are based on figures reported by Bureau of the Census, dry cleaning associations, and IRS publications. Since not all figures are reported on the same basis, there was some inconsistency. The most current and reliable source of data was used wherever possible.

This study does not attempt to estimate the amount of solvent switching which might result from the standards. The cost analysis and economic analysis present only the effects on perchloroethylene plants. At the present time, regulatory requirements associated with controlling emissions in plants utilizing the petroleum solvent process are minimal. It may be that in response to regulation of perc plants, new cleaners will select an alternative solvent. This may be economically advantageous as long as there is minimum control required for petroleum plants, but fire code regulations would prevent substantial switching. However, it is likely that new petroleum plants will be regulated with a new source performance standard in the future. Thus, the economic advantage of switching is uncertain since the control costs of alternative solvents have not been estimated. This study does not attempt to project the possibility of solvent switching from perc to petroleum.

The primary focus of this analysis is the effect of controls on profitability and return on investment. Changes in these parameters due to control requirements were evaluated to determine the influence of the controls on growth in the various industry sectors. Costs of controls are assumed to remain constant in constant dollars. It is possible that

solvent costs will actually rise more rapidly than inflation. Thus, the economic impacts of the carbon adsorber options (commercial, option 2; industrial, options 1 and 2) may be slightly overstated since rising solvent recovery credits may reduce actual control costs. This is not thought to have a substantial affect on the conclusions of this analysis.

8.4.2 Supplemental Industry Profile Data

8.4.2.1 Model Plant Economics. Table 8-22 provides a summary of the pertinent financial characteristics of the model plants considered in this study. Dry cleaning plant capital, total annual revenues and dry cleaning revenues, total plant profit and dry cleaning profit, and profit margins before and after taxes are shown. These figures are derived from various sources including Census data, industry sources, and earlier studies of the dry cleaning industry. The derivation of specific data elements is described in the following text.

8.4.2.1.1 Tax structure. In the following analysis the tax structure utilized is as follows: (Internal Revenue Code, 1979)

Net Taxable Income	Tax Rate (%)
1st $25,000	17
2nd $25,000	20
3rd $25,000	30
4th $25,000	40
All above $100,000	46

From this structure the average and marginal tax rates were determined. For both coin-ops and commercial plants, net taxable income falls in the first category. Federal tax is therefore 17 percent to which 4 percent is added for state and other taxes, giving a tax rate of 21 percent. Marginal and average tax rates are the same in these sectors. Federal tax rate for the industrial sector averages 35 percent, but the marginal tax rate is 46 percent. Adding in state and other taxes gives an average tax rate of 39 percent and a marginal tax rate of 50 percent for the industrial sector. The average tax rate is used to reflect the present condition of the model plants. In considering the effects of controls, the marginal tax rate will be applied to control costs or credits.

8.4.2.1.2 Coin-op sector. As Table 8-22 shows, the capital investment in dry cleaning equipment for a coin-op plant with two dry cleaning machines is about $12,000 (Clement, Bob, 22 March 1979). Total annual revenues for the coin-op plant averages $23,810, with about $7,500, or 31 percent of the total attributable to dry cleaning services (Gill, Ward, January 1979). Although this figure is lower than that based on throughput, it is used so as not to understate the economic impacts. Thus, while dry cleaning may be an important source of revenue to the coin-op plant, it is clear that the majority of plant revenues accrue from laundering services. The before-tax profit rate is estimated at 20 percent, based on conversations with industry representatives (Gill, Ward, January 1979). After tax profit margin (including owner's salary) is 15.8 percent. In this way, total annual plant profits before tax were estimated at $4,762 and the after-tax profit from dry cleaning was estimated as $1,185.

8.4.2.1.3 Commercial sector. The capital investment in dry cleaning plant and equipment for a commercial facility with an 11 kg machine is estimated at $54,900. This is derived from a 1976 value of $75,000 which is adjusted for plant size (TRW, 7 May 1976). Dry cleaning revenues for this model plant are estimated by multiplying the annual throughput (13,475 kg) by average price ($3.02/kg), yielding $40,695. This is taken to be 85 percent of total annual revenues for the plant, (Fisher, William, 23 January 1979; Census, 1972) which are estimated at $47,876. In the commercial sector, the dry cleaning service is the most important contributor to plant revenues and profits.

Industry sources indicate that pre-tax profit margins in the commercial sector average 3 percent with a range of 0-6 percent of sales (Karash, Susan, 17 September 1979). Although this value is lower than figures prepared by Robert Morris Associates and Bureau of Census, it is reasonable since it reflects profit margin before tax but after owners' salary has been subtracted. It is important to recall the nature of the industry. Many commercial dry cleaners are family run businesses. The principal goal of operations would be providing a livelihood and income for various family members. The business is often entered into to provide stable employment and reasonable income rather than high after-tax profits. Using the

Table 8-22. MODEL PLANT FINANCIAL PROFILE
(1978 dollars)

	Coin-op	Commercial		Industrial
		11 kg	23 kg	
Plant capital ($)[a]	12,000	54,900	90,200	394,000
Annual revenues ($/yr)[b]	23,810	47,876	100,104	4,965,353
Dry cleaning revenues ($/yr)	7,500	40,695	85,089	844,100
Net profit margin before taxes (%)	20	3[d]	3[d]	6[d]
Total before tax profit ($/yr)[c]	4,762	1,436	3,003	297,921
Average tax rate (%)	21	21	21	39
Total profit after tax ($/yr)[c]	3,762	1,134	2,372	181,732
After tax profit margin (%)	15.8[e]	2.4	2.4	3.7
Dry cleaning after tax profit ($/yr)	1,185	977	2,042	31,232

[a]Initial investment in dry cleaning portion of plant.

[b]Revenues from all plant operations.

[c]Net profit from all operations.

[d]Ranges in pre-tax profit margin: commercial plants 0-6% of sales, industrial 3-12% of sales.

[e]Includes owner's salary - commercial and industrial after tax profit margins are after owner's salary is deducted.

average pre-tax margin of 3 percent, plant profits are $1,436 before tax and $1,134 after tax with $977 of the after tax profit attributable to dry cleaning.

The second model plant for the commercial sector utilizes a 23 kg machine. Capital investment for the dry cleaning portion of the plant is approximately $90,200.

Revenues were derived as described for the 11 kg machine group. Dry cleaning revenues in this group are $85,089 per year and total plant revenues are $100,104. The after-tax profit rate is 2.4 percent resulting in estimates of a total annual profit of $2,372 after taxes, which includes a dry cleaning profit of $2,042.

8.4.2.1.4 Industrial sector. Capital investment in dry cleaning in the industrial sector is estimated as $394,000. Annual dry cleaning revenues are estimated by multiplying throughput 468,950 kg by an average price of $1.80/kg. This yields annual dry cleaning revenues of $844,100. This represents about 17 percent of total revenues for the plant. In the industrial sector, other services, such as linen supply, garment rental, etc., account for a significant proportion of total plant revenues. The pre-tax profit margin in this sector average 6 percent with a range of 3-12 percent (Karash, Susan, 17 September 1979). With an average tax rate of 39 percent the after-tax profit margin averages 3.7 percent. After tax profits for the plant average $181,732 of which $31,232 is from dry cleaning operations.

8.4.2.2 Competition and Pricing. The extent to which the costs of emission controls can be passed on through increased consumer prices will depend largely on price sensitivity. Whether these costs will be borne by the dry cleaner or by the consumer will depend on the price elasticity of demand for the dry cleaning industry. Price elasticity of demand is defined as the percentage change in quantity demanded, divided by the percentage change in price.

Since price levels are known, price elasticity can be calculated using sales data to approximate demand. Changes in the consumer price index for dry cleaning services were compared with throughput figures which were derived from revenues. In this way, price elasticity of

demand for dry cleaning from 1969 to 1975 is estimated at approximately -2.3. This means that for every 1 percent increase in price, the quantity demanded will decrease by 2.3 percent. Therefore, price increases cannot be accomplished without hurting revenues.

In addition, it would not be feasible for new plants to charge higher prices than those prevailing in a community for comparable dry cleaning services. New plants would not attract customers if their prices were noticeably higher. This is another constraint which restricts new plants from passing through costs. Of course, new plants in new communities without any dry cleaning service would not have this competitive pressure and might be able to pass through costs. In most cases, however, price increases would be strictly limited by local competition.

8.4.3 Economic Effects on New and Modified/Reconstructed Facilities

8.4.3.1 Introduction. New and modified/reconstructed facilities are treated together in this analysis for several reasons. As shown in section 8.2, the control costs for modified/reconstructed facilities are quite similar to those for new plants. For this reason, it is likely that the regulatory requirements would influence investors in new plants and owners with modification plans in a similar way. The owner of a plant considering major modifications would go through an analysis similar to that of a new investor. The effects on profitability and return on investment would be as shown below. In addition, the estimate of new sources, which is presented in section 8.1, includes sales for both new and replacement facilities. There is no evidence from which to determine the proportions of new and modified/reconstructed plants within this total. Thus, separate analysis would be complicated and subjective. The aggregate figures presented in section 8.2.5 include costs incurred by both new and modified/reconstructed facilities.

Table 8-23 provides a summary of the control technologies and costs for option 1 and option 2. Capital costs and annualized costs as shown in section 8.2 are reviewed. Capital requirements are shown as a percent of dry cleaning plant investment. Annualized costs are adjusted for taxes. These adjusted annualized costs will be used throughout the discussion of plant profitability and ROI.

Table 8-23. SUMMARY OF CONTROL COSTS
(1978 Dollars)

	Coin-op	Commercial 11 kg	Commercial 23 kg	Industrial
		Option 1		
Capital cost ($)[a]	18,500	(1,000)	14,000	11,700
As % of plant capital[b]	154	(2)	16	3
Annualized cost pre-tax ($/yr.)[c]	3,700	600	4,000	(13,100)
Annualized cost ($ yr.) with tax adjustment[d]	2,923	474	3,160	(6,550)
		Option 2		
Capital cost ($)[a]	0	4,000	4,000	11,700
As % of plant capital[b]	0	7	4	3
Annualized cost ($/yr.)[c]	0	600	300	(13,100)
Annualized cost ($/yr.) with tax adjustment[d]	0	474	237	(6,550)

[a]Initial capital investment in controls.

[b]Percent of capital investment of dry cleaning plant.

[c]As described in Section 8.2.

[d]Calculated as (annualized cost) x (1-t) where t is marginal tax rate.

Coin-op Commercial: t = 0.21

Industrial: t = 0.50

8.4.3.2 Capital Availability. For coin-op plants, option 1 imposes a capital cost of $18,500 which represents 154 percent of the average coin-op investment in uncontrolled dry cleaning equipment. This substantial capital requirement would impose a considerable hardship on new investors. The additional capital needed to install the dry cleaning process would probably deter investors from including the dry cleaning process in a new coin-op. Option 2 imposes no extra cost on this sector and therefore causes no capital availability problems.

For commercial plants with an 11 kg machine, option 1 creates a capital savings of $1,000, compared to the pre-NSPS plant, which is about 2 percent of plant capital. For option 2, the control devices impose a capital cost of $4,000, which is about 7 percent of plant capital requirements. Neither option is likely to discourage investment to any great extent.

For the larger commercial plant (23 kg machine), option 1 imposes capital costs of $14,000. This represents 16 percent of dry cleaning plant capital. This increment could pose capital availability problems for some investors. Option 2 is less severe, raising the capital requirement by only $4,000, or 4 percent of dry cleaning plant capital. Again, this is unlikely to pose a serious threat to investors.

In the industrial sector both option 1 and option 2 require the use of a carbon adsorber. This imposes a capital cost of $11,700, which is 3 percent of plant capital. This is unlikely to discourage investment, especially since the investment generates annual savings of $6,550 after tax. In fact, many plants have adopted this measure even without regulatory pressure.

8.4.3.3 Effects on Profit Margin and Return on Investment. In evaluating the economic impact of regulatory alternatives, it is necessary to consider the effect of the controls on the profitability of the industry and its return on investment (ROI). Table 8-24 summarizes the effects of control options 1 and 2 on profit and ROI for the model plants for each sector. For this analysis, it is assumed that the full cost of controls is absorbed with no price increase. This seems likely due to the competitive nature of the industry. Profit margins are after taxes and are derived

Table 8-24. EFFECTS OF CONTROL OPTIONS ON PROFIT AND RETURN ON INVESTMENT FOR MODEL PLANTS (1978 dollars)

Effects	Coin-op	Commercial 11 kg	Commercial 23 kg	Industrial
PROFIT EFFECTS				
Dry cleaning profit before control ($/yr)	1,185	977	2,042	31,232
Profit margin before controls (%)[c]	15.8	2.4	2.4	3.7
OPTION 1				
Cost of controls[b] ($/yr)	2,923	474	3,160	(6,550)
Dry cleaning profit after controls ($/yr)	1,738	503	(1,118)	37,782
Profit margin after controls (%)[c]	23	1.2	(1.3)	4.5
OPTION 2				
Cost of controls[b] ($/yr)	0	474	237	(6,550)
Dry cleaning profit after control ($/yr)	1,185	503	1,805	37,782
Profit margin after control (%)[c]	15.8	1.2	2.1	4.5
ROI EFFECTS[d]				
ROI before control (%)	9.9	1.8	2.3	7.9
ROI after option 1 (%)	(5.7)	0.9	(1.1)	9.3
ROI after option 2 (%)	9.9	0.9	1.9	9.3

[a]Assumes full absorption of control costs.
[b]Annualized after tax costs.
[c]After tax.
[d]ROI shown as percent calculated as (net profit after tax) ÷ (plant investment in dry cleaning + capital cost of controls)

as dry cleaning profit divided by the revenues attributable to the dry cleaning process.

An important determinant of the level of new investment in the industry is the expected return on investment (ROI). In this study, ROI is derived as net income (profit) after taxes divided by capital investment in the plant. Only dry cleaning process income and investment are considered and the ratios presented reflect ROI for the dry cleaning process. The ROI after controls is calculated using capital investment with controls, which is baseline plant investment plus capital investment for controls. The changes in ROI resulting from controls are shown in Table 8-24.

Without controls, the coin-op sector is estimated to have an after-tax profit margin of 15.8 percent. Option 1 eliminates profits and creates a $1,738 loss. Thus, the profit margin after tax drops from a +15.8 percent to -23 percent. This would essentially preclude entry of new coin-op cleaners. ROI under option 1 drops from 9.9 percent to a 5.7 percent loss which would surely limit investment in dry cleaning in this sector. Option 2, which imposes no additional costs, would not affect either profit margin or ROI for the coin-op model plant.

Without controls, the profit margin after taxes for the commercial sector is 2.4 percent. Under option 1, the profit margin declines to 1.2 percent for the 11 kg machine plant and ROI drops from 1.8 percent to 0.9 percent. This drop in ROI is very small and probably would not deter firms from offering dry cleaning services. Option 2 causes the same relative declines in profit margin. These changes probably would not deter investment. Profit margins and ROI for the industry are very low in absence of controls. Minor declines might have little effect on plant openings since the major purpose of operations is often to provide family jobs and income. As long as the after tax profit and ROI remain positive, controls would not be expected to deter individual small investors.

For the 23 kg machine plant, option 1 erodes the profit margin from 2.4 percent to a loss of 1.3 percent. ROI declines from 2.3 percent to -1.1 percent. Under this option, the smaller plant has better economics suggesting that growth in the larger plant might be discouraged. Option 2 is less stringent, causing the profit margin to decline only to 2.1 percent

and ROI to drop to 1.9 percent. This latter option would probably not discourage investment. However, the development of larger plants might be favored slightly.

Since the annualized cost of controls for industrial plants is a credit, the regulation would obviously not discourage the entrance of new plants. The after-tax margin increases from 3.7 percent to 4.5 percent under either option. ROI also increases, from 7.9 percent to 9.3 percent.

8.4.3.4 Effects of Controls on Growth and Entry of New Plants. The preceeding discussions of profit, ROI, and industry financial characteristics provide the basis for an evaluation of the effects of the control options on growth in the industry. Significant changes in either profit margins or ROI caused by the control options may discourage investment and strictly limit the construction of new sources. This section discusses the potential effects of control options 1 and 2 on investment in new dry cleaning plants.

Within the constraints of the model plant analysis, an investor either builds a plant or he does not. The analysis can only accommodate the evaluation of an average plant under static conditions. The model plant represents a single average level of profitability, investment, throughput, and ROI. Since all new plants are considered to have the same financial parameters, all new investors would make the same decision about the commitment of new resources to the dry cleaning industry. Data limitations make it difficult to quantitatively determine the number of plants which are more profitable than the model plant, although it is acknowledged that some plants operate in financial conditions more favorable than those described here. Based on a single data point, the investment is either advantageous or not worthwhile. One would conclude then, that either all or none of the expected plants would be built.

However, in reality these plants exist under varying economic conditions. In some regions prices may be higher and, hence, profits may be higher. Capital investment costs may vary substantially depending on the type and age of equipment installed. Plants may be opened more profitably in conjunction with the grassroots development of new communities. In these advantageous situations, growth may continue even though conditions

of the typical model plant indicate otherwise. Thus, if the changes in profit or ROI for the model plant indicate that none of the plants would be built, it is important to recognize that the variation in actual conditions would buffer the extreme conclusions. However, there is little data to support an objective estimate of the number of plants which exist in more advantageous circumstances.

Since the industry is highly competitive a new plant could not operate with higher prices than existing plants in the community. Hence, control costs would result in reduced profits for new plants. Table 8-25 summarizes the changes in industry growth for each control option. As the table indicates, there are some adverse impacts with option 1. As a general statement, these should not constrain the total supply of dry cleaning facilities within the existing industry or cause price increases since model plants in these sectors operate dry cleaning at relatively low utilization rates implicit in the model plant paramters shown in Table 6-1. Throughput per machine could increase substantially before a 100 percent utilization level would be approached.

Option 1 has a very severe effect on certain segments of the dry cleaning industry in terms of sharply reduced replacement and growth. For example, option 1 seriously erodes coin-op profit and ROI and would probably preclude investment. It is estimated that, of the projected 750 new plants, none would be built. Although this will virtually preclude new coin-op dry cleaning, it would not eliminate the coin-op niche for small business investors. It is highly probable that coin-op laundromats would continue to be built; they would just not include the dry cleaning machines. It is important to recall here that dry cleaning is not the dominant portion of the coin-op business.

As a second example of a possible adverse effect, option 1 is more costly for large commercial model plants than for the smaller model plant. Capital availability could pose some difficulty and both profit margin and ROI become negative. In this situation, growth in large plants would diminish, but growth in smaller plants might actually be larger than the baseline estimate. Controls would not contribute to closures of smaller plants under option 1.

Table 8-25. EFFECTS OF CONTROL OPTIONS ON NUMBER OF NEW PLANTS

	Coin-op	Commercial 11 kg	Commercial 23 kg	Industrial
Baseline growth[a]	750	2,451	817	50
		OPTION 1		
Number pre-empted	750	0	817	0
Option 1 growth[b]	0	2,451	0	50
		OPTION 2		
Number pre-empted	0	0	0	0
Option 2 growth[b]	750	2,451	817	50

[a]Number of new plants 1980-1984 in absence of controls.

[b]Number of new plants 1980-1984 under specified control requirements.

Option 2 imposes less stringent controls on the coin-operated and commercial sectors of the industry. It is unlikely that construction of any projected new sources would be pre-empted. In the commercial sector, option 2 is more costly to the smaller machine plant than to the larger machine plant. Although investment in this sector is not likely to be reduced, it is possible that this option would encourage use of the larger machines.

It must be emphasized again that this behavior is based on all plants having similar financial conditions. There will be a range of actual conditions, but there is no data to support objective estimates of the number of plants for which economic conditions may be more favorable.

8.5 SOCIOECONOMIC EFFECTS

8.5.1 Industry Structure

Option 1 could create some changes in the structure of the dry cleaning industry. It would virtually eliminate new growth in coin-op dry cleaning, until such time as capacity limitations caused prices to rise and enabled profitable operation. This might seem a severe threat to small business enterprises. However, it would not necessarily preclude the opening of new laundromats; rather, it would discourage investors from including dry cleaning machines in their plants. Dry cleaning is not the dominant revenue stream in coin-op plants. Thus, it is likely that a laundromat could operate profitably without the dry cleaning process in most situations.

The second effect of option 1 results from its different impacts on the two commercial model plants. Because profit and ROI are eliminated for the larger plant, it is probable that option 1 would cause shifting in the commercial sector. New investors might opt for smaller plants (11 kg machine) with better economic prospects. The end result could be higher-than-expected growth in the use of 11 kg machines, and no growth in the use of 23 kg machines.

Option 2 would probably not affect the overall industry structure.

8.5.2 Employment

Option 1 would reduce employment from baseline conditions. About 3,800 plant openings might be precluded in this case. The jobs associated

with these plants would be eliminated. Currently employed people would not become unemployed as a result of the regulation. Anticipated jobs simply would not be filled. This is fairly minor since dry cleaners, especially coin-ops, usually have few employees other than the owner. Assuming 4 employees per establishment, this would represent about 15,200 jobs in the U.S. economy.

Option 2 would not influence employment.

8.5.3 Balance of Trade

Neither option 1 nor option 2 would affect the balance of trade situation.

8.5.4 Community Effects

There are no community effects arising from either option 1 or option 2. The closure of 3,800 plants nationwide would not be expected to significantly influence any single community. This might involve 4 - 8 jobs in a typical community.

8.5.5 Price Level

Table 8-26 shows the cost of annualized dry cleaning controls as a percentage of dry cleaning revenues, which is the percentage change in price if costs were fully passed through. If this could occur, new coin-ops might operate profitably under option 1 by raising prices 39 percent. Under option 1, the 23 kg machine commercial plant would raise prices by 3.7 percent to maintain the same profit margin. An 11 kg machine plant would increase prices by 1.2 percent.

However, the competitive character of the industry precludes new plants from charging more than the existing population. Thus, price increases would usually be zero, and some plants would not be built. In the long run, prices could rise if retired capacity were not replaced. As this occurred, new plants would be built. In new communities where new demand centers arise, new growth would be unaffected by the controls.

8.5.6 Total Costs of Controls

The total cost of the control alternatives is presented in Table 8-21. This provides an estimate of the additional capital burden imposed on new plants from 1980-1984. (Total capital costs are found by multiplying the number of new plants by the capital cost per plant for each sector.) The

Table 8-26. MAXIMUM PRICE INCREASES RESULTING FROM ALTERNATIVE CONTROL OPTIONS ON DRY CLEANING MODEL PLANTS

	Coin-op	Commercial 11 kg	Commercial 23 kg	Industrial
		OPTION 1		
Percent price increase due to controls[a]	39	1.2	3.7	(0.8)
		OPTION 2		
Percent price increase due to controls[a]	0	1.2	0.3	(0.8)

[a]Derived as follows: (annualized costs after tax) ÷ (dry cleaning revenues); price change assumes full passthrough of control costs by dry cleaning plant.

annualized cost figures shown represent the cumulative totals of annualized costs for new plants opening during the period from 1980 through 1984. Pre-tax annualized costs are used to reflect the total cost to the economy. Other assumptions made in the calculations are covered in section 8.2.

In summary, option 1 imposes a total capital cost of $23.2 million on the dry cleaning industry between 1980 and 1984. The 1984 annualized cost (which includes capital recovery) is $7.2 million. This is clearly below the regulatory action criterion of $100 million in the first five years.

With option 2, total industry costs are somewhat lower. Total capital costs are $7.2 million and 1984 annualized costs are $0.8 million.

REFERENCES FOR CHAPTER 8

Atha, Lou, Public Accountant specializing in small businesses, telephone conversation with Dees, Edith, TRW, 29 May 1979.

Blythe, Bob, Virginia Carolina Laundry Supply, telephone conversation with Young, Dexter E., TRW, 5 December 1978.

Census of Selected Services, 1972, United States Department of Commerce, United States Bureau of the Census, Washington, D. C. U.S. Government Printing Office, 1976. p. 8-7, 8-19 to 8-21.

Clement, Robert, Sterling Supply Co., telephone conversation with Karash, Susan, Energy and Environmental Analysis, Inc., 22 March 1979.

County Business Patterns, 1976, United States Department of Commerce, United States Bureau of the Census, Washington, D. C. U.S. Government Printing Office, 1978.

Dees, Edie, TRW, letter to Sluizer, Bud, confirming telephone conversation of 19 January 1979, 7 May 1979.

Davis, Durwood, Star Distribution Company, letter to Young, Dexter E., TRW, 19 August 1979.

Directory of Chemical Producers, 1977. Stanford Research Institue. Menlo Park, California, 1978.

Faig, Ken, IFI Fabricare News, International Fabricare Institute, "Results of IFI Survey of 1978 Operating Costs," October 1979.

Fisher, William E., Director of Research International Fabricare Institute, telephone conversation with Dees, Edith, TRW, 19 January 1979.

Fisher, William E., Director of Research International Fabricare Institute, telephone conversation with Browne, Renee, Energy and Environmental Analysis, Inc., 23 January 1979.

Fisher, William E., Director of Research International Fabricare Institute, telephone conversation with Young, Dexter E., TRW, 26 April 1979.

Fisher, William E., Director of Research International Fabricare Institute, telephone conversation with Browne, Renee, Energy and Environmental Analysis, Inc., 17 May 1979.

Gill, Ward, President of the National Automatic Laundry and Cleaning Council, telephone conversation with Dees, Edith, TRW, 18 January 1979.

Gill, Ward, President of the National Automatic Laundry and Cleaning Council, telephone conversation with Browne, Renee, Energy and Environmental Analysis, Inc., January 1979.

Gill, Ward, President of the National Automatic Laundry and Cleaning Council, telephone conversation with Young, Dexter E., TRW, 26 April 1979.

Hansen, Lyle, VIC Manufacturing, telephone conversation with Young, Dexter E., TRW, 5 December 1978.

Internal Revenue Code, Commerce Clearing House, Chicago, Illinois, January 1979.

Karash, Susan, Energy and Environmental Analysis, Inc., memorandum to Tuttle, Dan, on meeting on Perchloroethylene Drycleaning, 17 September 1979.

Kleeberg, Charles F., US EPA, "Material Balance of Industrial Perchloroethylene Dry Cleaner", test report to James F. Durham on test in San Antonia, Texas, 17 March 1976.

Manzone, Richard, Hoyt Manufacturing, telephone conversation with Young, Dexter E., TRW, 21 December 1978.

McMonagle, Ray, VIC Manufacturing, telephone conversation with Young, Dexter E., TRW, 20 August 1979.

Monarch, M. R., et al. Priorities for New Source Performance Standards Under the Clean Air Act Amendments of 1977. U.S. Environmental Protection Agency. Research Triangle Park, N.C. Publication No. EPA-450/3-78-019, April 1978.

Quarterly Machinery Market Report for the Quarter Ended September 30, 1978 of the Laundry and Cleaners Allied Trades Association (LACATA), 30 September 1978.

Sluizer, Mervyn, Technical Director of Institute of Industrial Launderers, telephone conversation with Dees, Edith, TRW, 17 January 1979.

Sluizer, Mervyn, Technical Director of Institute of Industrial Launderers, telephone conversation with Browne, Renee, Energy and Environmental Analysis, 23 January 1979.

Shamel, R.E., J. K. O'Neill, and R. Williams, Preliminary Economic Impact Assessment of Possible Regulatory Action to Control Atmospheric Emissions of Selected Halocarbons. EPA-450/3-75-073. US EPA, Research Triangle Park, N.C., 1975.

TRW. Study to Support New Source Performance Standards for the Dry Cleaning Industry. Final Report. U.S. Environmental Protection Agency. Research Triangle Park, N.C. Publication No. EPA-450/3-76-029, May 1976.

VIC Brochure, "Mileage Booster", December 1978.

Young, Dexter E., Trip Report of visit to R. R. Street and Company, Inc., on 1 November 1979, 1 November 1979.

APPENDIX A. EVOLUTION OF THE BACKGROUND INFORMATION DOCUMENT

APPENDIX A. EVOLUTION OF THE BACKGROUND INFORMATION DOCUMENT

EPA presented a draft standard to the National Air Pollution Control Techniques Advisory Committee (NAPCTAC) in August 1976. Comments received there resulted in the separation of the different dry cleaning solvents for further study. EPA published a Control Techniques Guideline (CTG) Document in December 1978. The CTG is a guide to the States for controlling perc emissions from existing perc dry cleaners in non-attainment areas. In October 1978, EPA began working on the development of an NSPS for perc dry cleaners. A draft standard was presented to NAPCTAC in August 1979.

A.1 Chronology

The chronology which follows includes those events which have occurred in developing the BID for perchloroethylene dry cleaning. Anticipated events which lead up to the proposal of the standard in the Federal Register are also included.

Date	Activity
November 3-20, 1975	Plant test at Hershey Dry Cleaners and Laundry, Hershey, Pennsylvania, of the fluorocarbon machines and the perc machine.
January 15-27, 1976	Plant test at Hershey Dry Cleaners and Laundry, Hershey, Pennsylvania, of the fluorocarbon machines.

Date	Activity
March 1-29, 1976	Plant test at Texas Industrial Services, San Antonio, Texas, of a large industrial perchloroethylene dry cleaning plant.
April 7-20, 1976	Plant test at Westwood Cleaners, Kalamazoo, Michigan, of a small dry-to-dry perchloroethylene dry cleaning plant.
August 10-11, 1976	First National Air Pollution Control Technique Advisory Committee (NAPCTAC) meeting on dry cleaning, Chicago, Illinois.
August 31, 1978	EPA proposed a list (including perc dry cleaners) of stationary sources for which NSPS would be written.
December 7, 1978	Meeting with industry representatives, TRW, and EPA at EPA Offices, Durham, N. C.
December, 1978	EPA published "Control of Volatile Organic Emissions from Perchloroethylene Dry Cleaning Systems," EPA-450/2-78-050.
March 14, 1979	Plant visit to Plaza Cleaners, Shop-Rite Shopping Center, Northvale, New Jersey.
March 26-30, 1979	Plant test at Kleen Korner, Cortland, New York, of an average size dry-to-dry perchloroethylene dry cleaning plant.
June 4-7, 1979	Plant test at Plaza Cleaners, Shop-Rite Shopping Center, Northvale, New Jersey, of a refrigerated condenser at a perchloroethylene dry cleaning plant.
June 29, 1979	Meeting with industry representatives, TRW, and EPA at EPA Offices, Durham, N. C.
August 21, 1979	EPA promulgated the list of stationary sources for which NSPS would be written.
August 28,29, 1979	Second NAPCTAC meeting on perc dry cleaning, Raleigh, North Carolina.

Date	Activity
September 17, 1979	Meeting with International Fabricare Institute, Institute of Industrial Launderers, Neighborhood Cleaners Association, EEA, TRW, and EPA at EEA Offices, Arlington, Virginia.
October 2, 1979	Meeting with VIC Manufacturing in Minneapolis, Minnesota.
November 1, 1979	Meeting with R.R. Street in Oak Brook, Illinois.
December 18, 1979	Meeting with representatives of the International Fabricare Institute, Institute of Industrial Launderers; National Automatic Laundry and Cleaning Council; Patton, Boggs, and Blow; and Textile Rental Services Association, in Durham, N.C. to obtain comments on the Steering Committee Review Package.
January 11, 1980	Steering Committee Meeting.
June 18, 1980	Presentation of preamble, regulation, and advanced information and action memos for Assistant Administrator concurrence.
July 1, 1980	First Meeting of the Science Advisory Board's Subcommittee on Airborne Carcinogens.
July 14, 1980	Preamble and Regulation signed into AA Review by the Assistant Administrator for Air, Noise, and Radiation.
October 1980	Anticipated proposal of regulation in the Federal Register.

APPENDIX B. INDEX TO ENVIRONMENTAL IMPACT CONSIDERATIONS

APPENDIX B. INDEX TO ENVIRONMENTAL IMPACT CONSIDERATIONS

Agency Guidelines for Preparing Regulatory Action Environmental Impact Statements 39 FR 37419	Location within the Background Information Document
(1) Background and Summary of Regulatory Alternatives	The regulatory alternatives are summarized in Chapter 1, Section 1.1.
Statutory Basis for Proposing Standards	The statutory basis for the regulatory alternatives is summarized in Chapter 2.
Relationship to other Regulatory Agency Actions	The various relationships between the regulatory alternatives and other regulatory agency actions are summarized in Chapters 3, 7, and 8.
Industry Affected by the Regulatory Alternatives	A discussion of the industry affected by the regulatory alternatives is presented in Chapter 3, Section 3.1. Further details covering the "business/economic" nature of the industry is presented in Chapter 8, Section 8.1.
Specific Processes Affected by the Regulatory Alternatives	The specific processes and facilities affected by the regulatory alternatives are summarized in Chapter 1, Section 1.1. A detailed technical discussion of the sources and processes affected by the proposed standards is presented in Chapter 3, Section 3.2.
Availability of Control Technology	Information on the availability of control technology is given in Chapter 4.
Existing Regulations	A discussion of existing regulations on the industry to be affected by the regulatory alternatives are included in Chapter 3, Section 3.3.2 and Chapter 8, Section 8.3.

APPENDIX B. INDEX TO ENVIRONMENTAL IMPACT CONSIDERATIONS (Continued)

Agency Guidelines for Preparing Regulatory Action Environmental Impact Statements 39 FR 37419	Location within the Background Information Document
(2) Alternatives to the Regulatory Alternatives	
Environmental Impacts	Environmental effects of not implementing the regulatory alternatives are discussed in Chapters 3 and 7.
Costs	The costs of alternative control techniques are discussed in Chapter 8, Sections 2, 3, and 4.
(3) Environmental Impact of the Regulatory Alternatives	
Air Pollution	The air pollution impact of the regulatory alternatives is discussed in Chapter 7, Section 1.
Water Pollution	The water pollution impact of the regulatory alternatives is discussed in Chapter 7, Section 2.
Solid Waste Disposal	The solid waste disposal impact of the regulatory alternatives is discussed in Chapter 7, Section 3.
Energy	The energy impact of the regulatory alternatives is considered in Chapter 7, Section 4.
(4) Economic Impact of the Regulatory Alternatives	The economic impact of the regulatory alternatives on costs is discussed in Chapter 8, Section 2.

APPENDIX C. EMISSION SOURCE TEST DATA

APPENDIX C. EMISSION SOURCE TEST DATA

Dry cleaning plants differ in size, control techniques, design, capacity, types of articles cleaned, climate of locality, soil composition of clothes, age of equipment, and maintenance history. These parameters can, to some extent, affect emissions. Several perchloroethylene plants utilizing current emission control technologies have been tested in order to determine the effects of best available control in the dry cleaning industry. Five plants were tested - four commercial plants (Plants A, C, D, and E) and one industrial plant (Plant B). Plant A was a large commercial plant with a machine capacity of 50 kg (110 lb). This can be compared with the average commercial plant as established in Chapter 5, which has a capacity of 18 kg (40 lb). Plant C was an average size commercial plant with a dry-to-dry machine having a capacity of 19 kg (40 lb). Plants D and E were also average size dry-to-dry commercial plants with rated capacities of 18-20 kg (40-45 lbs). Plant B was an average size industrial plant with a machine capacity of 113 kg (250 lb). Tests involved material balance calculations and adsorber outlet measurements. Test results are displayed in Table C-1. Descriptions of these plants can be found in the following text.

C.1 PLANT A

Plant A is a commercial operation using perchloroethylene in a 50 kg capacity machine. The machine, a SM-11 washer manufactured by the Washex Machinery Corporation, was installed in 1967 in Hershey, Pennsylvania, and was tested in November of 1975. The system consists of a washer/extractor, regenerative filter muck cooker/still and two solvent tanks, all in one unit (refer to Figure C-1). The system also has two reclaiming dryers, and a VIC dual canister carbon adsorber. The adsorber collects emissions from the washer door vent, the dryer, floor vents, and the distillation (muck cooker) unit. The plant conducted two operations which are not normally

Table C-1. PERCHLOROETHYLENE DRY CLEANING TEST DATA[a,b,c,d,m]
(kg/100 kg of clothes)

Plant	System	Throughput	Total plant emissions kg/100 kg[e]	Carbon adsorber outlet kg/100 kg	Carbon adsorber inlet kg/100 kg	Muck cooker filter or still kg/100 kg	Water separator
A	Transfer	455 kg/day	4.1	0.2	4.6	0.73[f]	0.07
B	"Kissing" machine	1750 kg/day	2.5	0.002 Washer loading 1[g]	7.7	0.38[h,i]	0.026
C	Dry-to-dry	170 kg/day	2.1	0.7	23.0[j]	0.6[k]	0.001
D	Dry-to-dry	185 kg/day	6.6	0.1	3.3	2.73[l]	-
E	Dry-to-dry	107 kg/day	2.6[n]	-	-	-	-

[a]Kleeberg, C. F., 14 May 1976, and MRI, 28 April 1978.

[b]Kleeberg, C. F., 17 May 1976, and MRI, 25 June 1976.

[c]Kleeberg, C. F., 17 March 1976, and Scott Environmental Technology, Inc., March 1976.

[d]Jongleux, Robert F., December 1979.

[e]Based on capacity of machines.

[f]Muck cooker/still.

[g]Washer drum is vented to atmosphere during loading.

[h]Distillation unit is vented through a condenser to atmosphere; loss is 0.35 kg/100 kg.

[i]Oil cooker on still residue; loss is 0.26 kg/100 kg.

[j]This type of system is not widely used in dry cleaning industry. Most use reclaiming dryers.

[k]Cartridge filter.

[l]Low pressure type cartridge filter.

[m]Jongleux, Robert F., April 1980.

[n]This plant is a closed system; because of this, actual emissions could not be measured; the 2.6 kg/100 kg represents solvent losses.

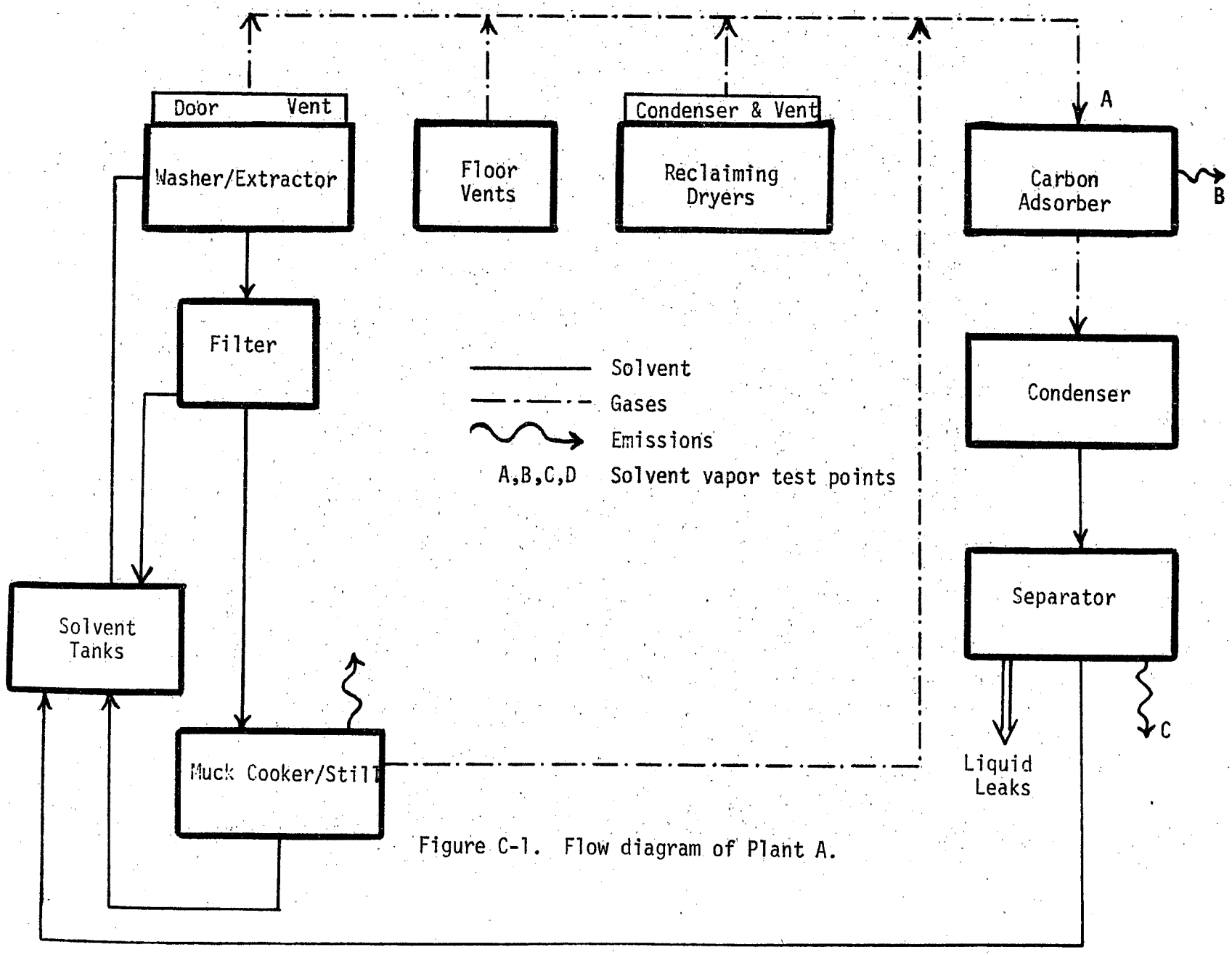

Figure C-1. Flow diagram of Plant A.

used in dry cleaning services; fire proofing, and water repelling applications. The addition of these materials was accounted for in the material balance.

Test results indicate a total emission rate of 4.1 kg of solvent per 100 kg of clothes cleaned (refer to Table C-1). Emissions from the adsorber averaged about 0.2 kg/100 kg of clothes. The inlet to the adsorber measured approximately 4.6 kg/100 kg of clothes, thus, the adsorber was achieving a 96 percent removal efficiency. The test of this system demonstrated the performance of carbon adsorption as a control technique. The carbon in this carbon bed was over 15 years old and could still be used to achieve a 96 percent removal efficiency (refer to Table C-2). Overall plant emissions would be more than double the present rate without an adsorber.

This dry cleaning system suffered from inadequate housekeeping. Liquid leaks were sighted and buckets of solvent on the outlets of the water separators were left uncovered. These containers should be closed and vented to the adsorber. The scent of perchloroethylene was prevalent throughout the plant. The amount of solvent vapors emitted to the atmosphere from any dry cleaning plant is dependent upon the type of equipment used, the amount of cleaning performed, and the precautions practiced by the operating personnel. In this plant, housekeeping practices were poor. Liquid losses were detected visually as brown residue associated with a solvent leak. Because of the volatility of the solvents, these liquid leaks are eventually evaporated to the atmosphere. These losses occur at evaporative points and tears in ductwork.

The emission factor of 4.1 kg/100 kg for Plant A can be compared to the emission rate of 4.9 kg/100 kg estimated by an IFI survey (Watt, Andrew, IV, and Fisher, W. E., January-February 1975) for a usual plant which has a regenerative filter with a muck cooker and which is also equipped with a carbon adsorber. The emission factor of 4.9 kg/100 kg was an average for well-operated commercial plants. In Plant A, the adsorber collects emissions from the washer door vent, the dryers, floor vents, and the distillation (muck cooker) unit whereas in the plants examined by the IFI survey, the adsorber collects emissions only from the washer and dryer.

Table C-2. TEST DATA

Plant	Process (units vented)	Clothes cleaned per day	Inlet concentration ppm	Outlet concentration ppm[a]	Efficiency percent	Estimated size of unit (floor space)
A	Transfer, commercial (washer door, dryer floor vents, distillation unit vent)[b]	450 kg/day	600	25	96	3.7 sq. meters (40 sq. ft.)
B	"Kissing" machine industrial (washer door, dryer)[b]	1750 kg/day	5300-6500	2.0	99	5.6 sq. meters (60 sq. ft.)
C	Dry-to-dry, commercial dry-to-dry machine (dry-to-dry machine door, floor vents)[b]	170 kg/day	3300	100[c]	97	1.1 sq. meters (12 sq. ft.)
D	Dry-to-dry, commercial machine (dry-to-dry machine)[b]	185 kg/day	400	11	97	1.5 sq. meters (16 sq. ft.)
E	Dry-to-dry, commercial machine with multi-pass refrigerated condenser.	170 kg/day	9900	8800	14[d]	4.4 sq. ft. (0.4 sq. meters)

[a]For one cycle of adsorption-desorption of a single bed.

[b]Indicates the emission sources that were vented to the carbon adsorber.

[c]Limited semicontinuous data show this adsorber to have been underdesigned.

[d]Efficiency for single pass through refrigerated condenser.

C.2 PLANT B

Plant B is an industrial dry cleaning plant using perchloroethylene solvent, which began operation in 1957 and was tested in March of 1976. It is an Amercian Laundry Machinery system which includes washer/extractor, "kissing" dryer, distillation unit, chemical separator, oil cooker and single bed carbon adsorber (refer to Figure C-2). The adsorber collects emissions from the washer and dryer only. The carbon adsorption unit collects solvent during the day from clothes transfer, deodorizing and dryer unloading. The capacity of the washer is about 113 kg per load but shirts are loaded at 90 kg per load because of the number of articles per kilogram. Pants are loaded at capacity.

The "kissing" washer/dryer is unique in the industry. At the end of the wash cycle, the dryer is pneumatically rolled to within 0.3 meters of the washer, both doors and opened and the clothes are transferred by tumbling. This design greatly reduces the time that solvent laden clothes are exposed to the atmosphere. During the transfer operation, exhaust fans inside both the washer/extractor and the reclaiming tumbler remain on to minimize escape of perchloroethylene vapors.

Test results showed an emission rate of approximately 2.5 kg of solvent per 100 kg of clothes cleaned (refer to Table C-1). Emissions from the adsorber averaged about 0.002 kg/100 kg of clothes, thus, the adsorber achieved a 99+ percent removal efficiency (refer to Table C-2). Most of the losses were accounted for in a special washer loading exhaust and in a distillation unit vent. The washer loading exhaust was vented to the atmosphere during loading of the washer drum. Samples were taken of both these discharges. The average total emissions from these two sources was 1.35 kg per 100 kg of clothes cleaned.

Exemplary housekeeping practices were followed at the plant, thus reducing fugitive emissions. No solvent leaks were detected by sight or smell. The equipment in this plant was installed between 1970 and 1975 (Kleeberg, Charles F., 14 May 1976).

C.3 PLANT C

Plant C consists of a dry-to-dry Vic Model 221 Strate System with a capacity of 18 kilograms. This is an average size commercial dry-to-dry

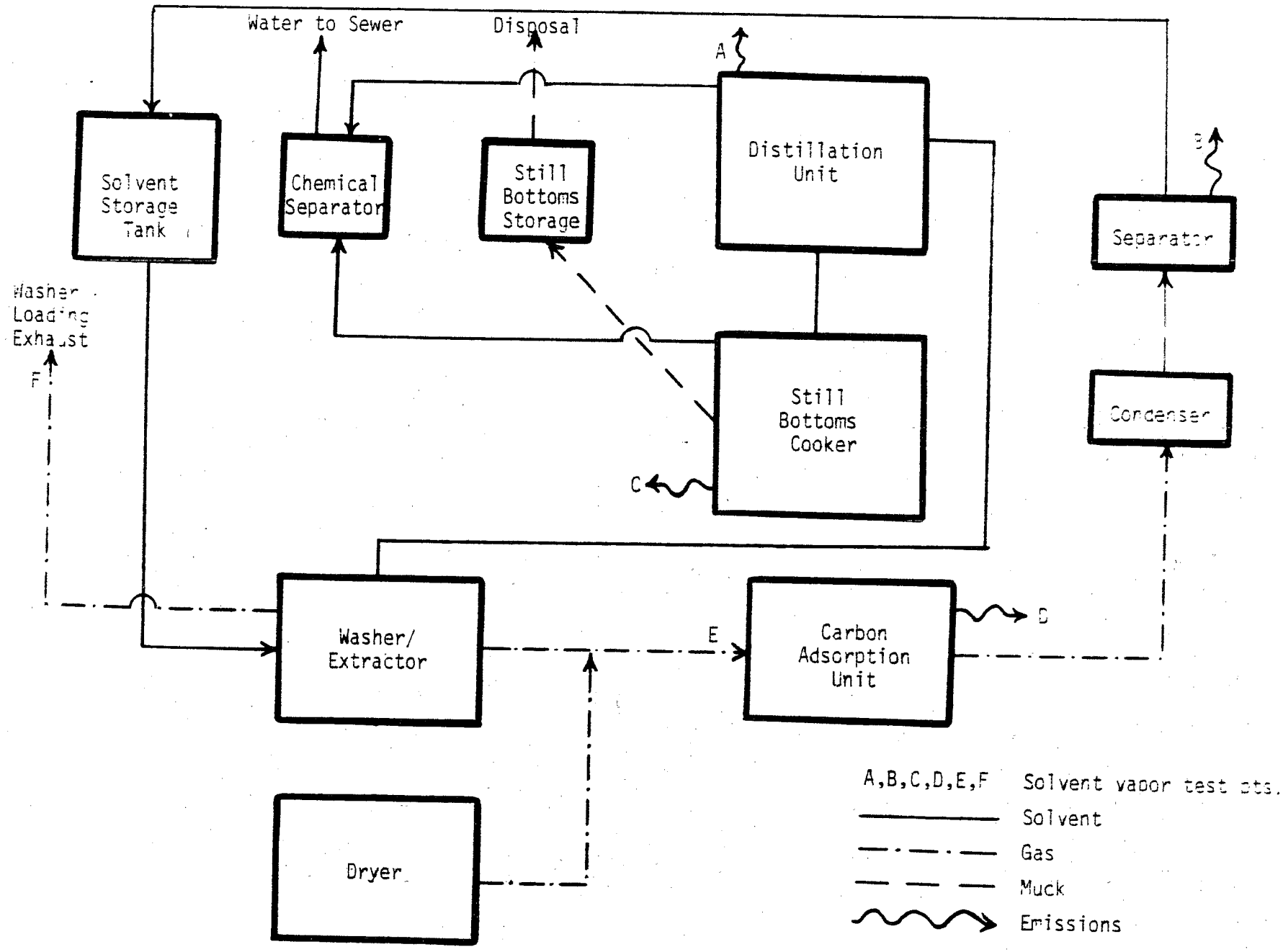

Figure C-2. Flow diagram of Plant B.

machine. The system vents to a dual canister carbon adsorber from the dry-to-dry machine (during the entirety of the drying cycle), from floor vents, and from the dry-to-dry machine door (refer to Figure C-3). Each carbon bed operates for one cycle of the dry-to-dry machine and is then desorbed during the next cycle. There were some indications that the carbon beds were undersized. Limited data taken from a semi-continuous monitor indicate that breakthrough occurred on each bed during its cycle. The solvent purification device used in the system is a 14 cartridge paper filter.

Test results yielded an emission rate of 2.1 kg of solvent used per 100 kg of clothes cleaned. The total system lost approximately 3.5 kg of solvent per day. Of this total amount, the carbon adsorber lost 1.5 kg at an average outlet concentration of 100 ppm (Kleeberg, Charles F., 17 March 1976). The average outlet concentration was high because breakthrough occurred during each cycle. The cartridge filter accounted for an estimated 1.0 kg of solvent lost per day.

Plant C is a continuously venting perchloroethylene dry-to-dry system. It does not recirculate the exhaust gas from the drying operation through a solvent condenser but the vapor passes directly into a carbon adsorption unit. The exhaust gas from the adsorber is continuously vented to the atmosphere.

C.4 PLANT D

Plant D (Figure C-4) is a dry-to-dry commercial dry cleaning plant with a rated capacity of 18-20 kg (40-45 lbs). This dry-to-dry machine, model 11-20-H, manufactured by Detrex was installed in 1976 in Cortland, New York, and was tested in March of 1979 (Jongleux, R.F., December 1979). The dry cleaning system utilized a Kleen-Rite (model #34-1200) cartridge filter system for purifying the dry cleaning solvent. A 17 year old Hoyt Model I carbon adsorber (with the original carbon) was used to recover perc from the dry cleaning machine. The carbon adsorber was connected only to the dry cleaning machine with one additional opening, a 3/4 inch pipe, opening to the ambient air. At one time, the cartridge filters had vented to the adsorber by means of this pipe but have since been disconnected.

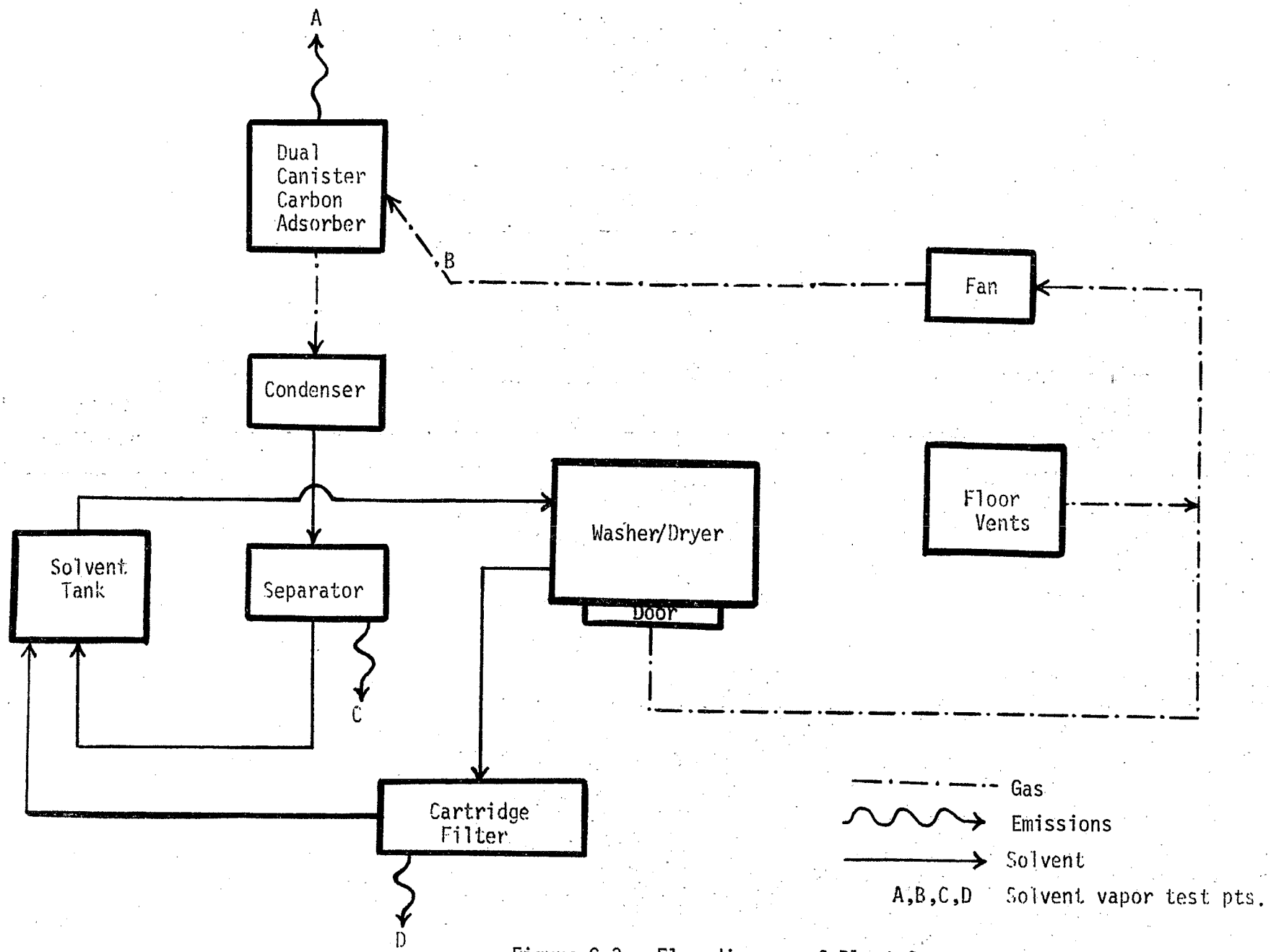

Figure C-3. Flow diagram of Plant C.

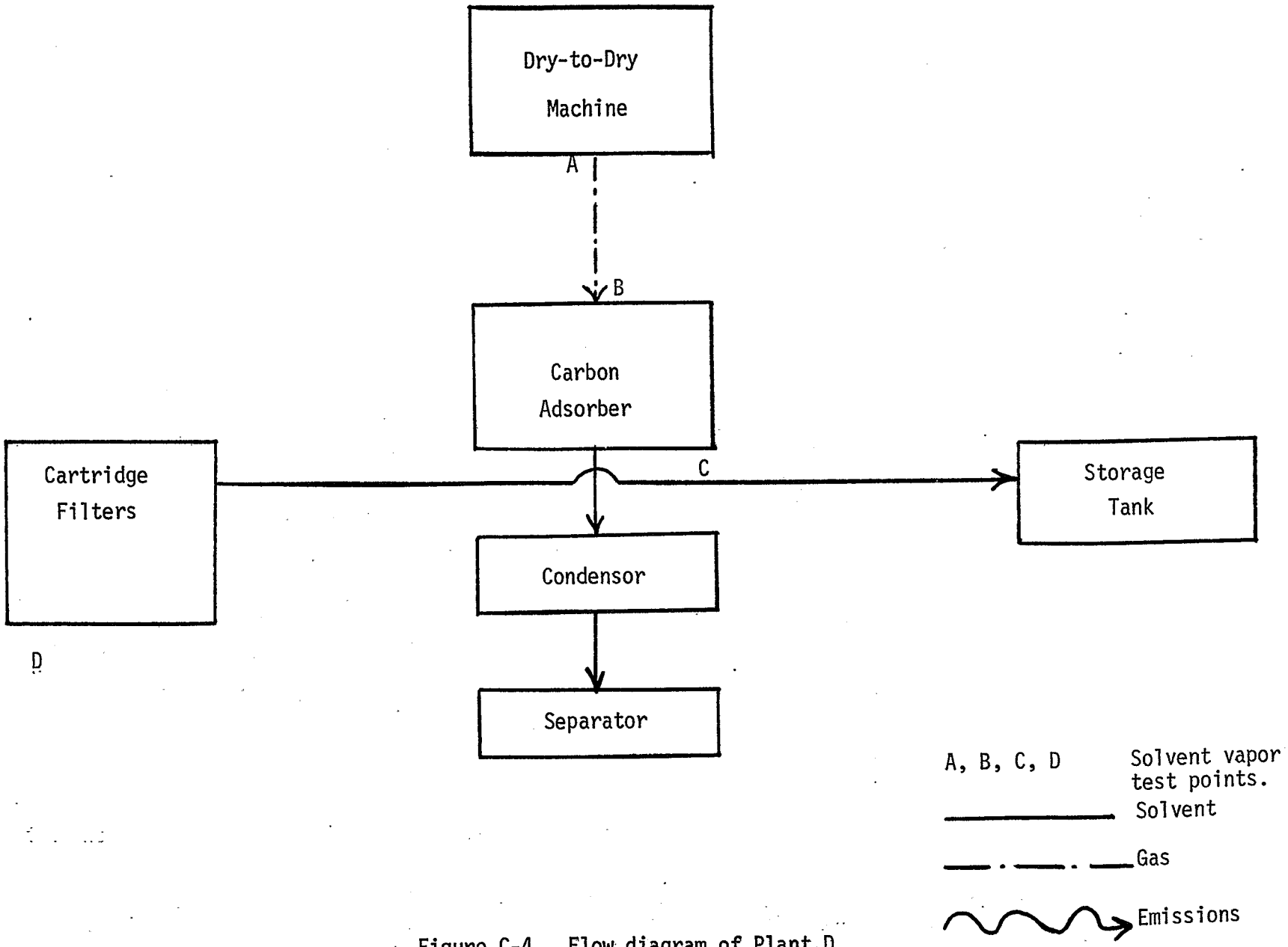

Figure C-4. Flow diagram of Plant D.

Test results (refer to Tables C-1 and C-2) indicate a total emission rate of 6.6 kg of solvent per 100 kg of clothes cleaned. Emissions from the outlet of the adsorber averaged about 0.1 kg/100 kg of clothes. The inlet to the adsorber averaged approximately 3.3 kg/100 kg of clothes cleaned, thus the adsorber was achieving a 97 percent removal efficiency. The test of this system demonstrated that carbon adsorption can achieve high removal efficiencies as long as the carbon bed was desorbed at the end of every day. In this test, when the adsorber was desorbed the day before, the efficiency was 97 percent and the adsorber outlet concentration never exceeded 25 ppm. When the bed was not desorbed the day before, breakthrough occurred. The efficiency dropped to 83 percent and the adsorber outlet concentration reached 100 ppm.

The majority of losses from this dry cleaning system came from the cartridge filters. The perc loss due to changing the cartridge filters was calculated as 2.74 kg/100 kg throughput which represents almost half of the total losses. The carbon adsorber average loss was 0.1 kg/100 kg throughput.

The remainder of the emissions were attributable to fugitive losses. Fugitive losses are vapor leaks or liquid leaks. The major leaks appeared to be from valves in the solvent lines to the filters where perc leaked enough during the night to form a small puddle on the base tank of the machine. Damper leaks were also suspected since there was a measurable concentration of perc at all times at the inlet sampling location, despite the fact that the damper to the carbon bed from the machine was closed. These losses measured represented about 3.8 kg/100 kg of clothes processed.

The total losses of 6.6 kg/100 kg of clothes cleaned is equivalent to about 10 600 pounds of cleaning per drum of solvent.

C.5 PLANT E

The perchloroethylene dry cleaning equipment at this plant consisted of two pieces of equipment; a commercial dry-to-dry perchloroethylene dry cleaning machine and a refrigerated condenser. The dry cleaning machine had a rated capacity of 30 kg (65 lbs). The refrigerated condenser relaimer, called a Resolver® by the manufacturer, was designed to serve up to a 30 kg (65 lb) machine. Because the system was completely closed, actual emissions from the process could not be measured. However, inlet and outlet

concentrations to the dryer were measured. Because the condenser is a multi-pass type of control device, efficiency data for a single pass through are not indicative of the actual machine performance. In this case, the test data that are most useful are the material balance numbers. This data indicated 2.6 kg of solvent was lost per 100 kg of clothes processed (Jongleux, R.F., April 1980). Therefore, for installations such as this one, when fugitive and filters losses are minimal, refrigerated condensers can achieve solvent loss rates equivalent to carbon adsorber equipped facilities.

REFERENCES FOR APPENDIX C

Jongleux, Robert F., "Emission Test Report, Leaks from Perchloroethylene Dry Cleaners," TRW, EMB 76-DRY-6, December 1979.

Jongleux, Robert F., "Material Balance Test Perchloroethylene Refrigerated Closed System at Plaza Cleaners, Northvale, New Jersey," EMB 79-DRY-7, TRW, April 1980.

Kleeberg, Charles F., US EPA, "Material Balance of a Perchloroethylene Dry Cleaning Unit," test report to James F. Durham on test in Hershey, Pennsylvania, March 17, 1976.

Kleeberg, Charles F., US EPA, "Material Balance of an Industrial, Perchloroethylene Dry Cleaners," test report to James F. Durham on test in San Antonio, Texas, May 14, 1976.

Kleeberg, Charles F., US EPA, "Material Balance of a Small Commercial Perchloroethylene Dry Cleaner," test report to James F. Durham on test in Kalamazoo, Michigan, May 17, 1976.

Midwest Research Institute, "Test of Industrial Dry-Cleaning Operation at Texas Industrial Services, San Antonia, Texas," No. 76-DRY-2, April 28, 1976.

Midwest Research Institute, "Source Test of Dry Cleaners," No. 76-DRY-3, June 25, 1976.

Scott Environmental Technology, Inc., "A Survey of Perchloroethylene Emissions from a Drycleaning Plant," No. 76-DRY-1, March 1976.

Watt, Andrew, IV, and William E. Fisher, "Results of Membership Survey of Dry Cleaning Operation." IFI Special Reporter No. 3-1, January-February 1975.

APPENDIX D. EMISSION MEASUREMENT AND CONTINUOUS MONITORING

APPENDIX D
EMISSION MEASUREMENT AND CONTINUOUS MONITORING

D.1 EMISSION MEASUREMENT METHODS

D.1.1 Emission Measurement Method for Perchloroethylene From Adsorber Vent

The primary method used to gather emission data has been the integrated bag sampling procedure followed by gas chromatographic/flame ionization detector analysis. Appendix B, EPA Method 23: "Determination of Halogenated Organics from Stationary Sources," describes this approach. For this method, the integrated bag sampling technique was chosen over charcoal adsorption tubes for two reasons: (1) less uncertainty about sample recovery efficiency, and (2) only one sample portion to analyze per sample run. A column identified by a major manufacturer of chromatographic equipment as useful for the separation of chlorinated solvents is employed.

The method was written after an initial EPA funded study of halogenated hydrocarbon testing revealed areas where improvements in the bag sampling technique were needed. In particular, leaking bags and bag containers were cited as a probable cause of poor correlation between integrated and grab samples taken at an emission site by that contractor. In light of these findings, more rigorous leak check procedures were incorporated. The first test conducted by EPA with the improved method to gather emission data utilized both integrated bag and grab sampling techniques as a form of quality control. For the three days during which tests were made, very good correlation between the two techniques was obtained.

In the EPA tests, all non-methane hydrocarbon peaks were summed to yield a total value. Since perchloroethylene was anticipated to be the major constituent, all calculations were based on perchloroethylene standards. In the three tests performed by EPA, little, if any, non-methane hydrocarbon other than perchloroethylene was found.

With slight modifications as noted in the test reports, velocity measurements on inlet and outlet ducts were done according to Methods 1 and 2 of the Federal Register, Vol. 36, No. 247, December 23, 1971.

D.1.2 Perchloroethylene from Still Residues and Wet Waste Material from Regenerable Filters

The method used to determine perchloroethylene content in the still residues and wet waste material from regenerable filters has been a distillation procedure similar to the test method described by the American Society for Testing and Materials (ASTM), designation D322-67, "Standard Method of Test for Dilution of Gasoline Engine Crankcase Oils." Two minor modifications to that procedure were required: (1) because perchloroethylene is heavier than water, the Liebig condenser was modified to collect the perchloroethylene on the bottom of the calibrated trap and allow the water to overflow from the top, (2) instead of determining a volumetric percentage, a weight percent was determined by adding a known mass of sample to the flask instead of known volume of sample. The mass of perchloroethylene collected was calculated from the volume of perchloroethylene collected and the specific gravity of perchloroethylene.

D.2 MONITORING SYSTEMS AND DEVICES

D.2.1 Leak Detection Methods

There are several types of portable, self-contained instruments currently available for leak monitoring in dry cleaning facilities. The principles of operation are catalytic-oxidation, flame ionization, and infrared energy absorption. All three types of detection will respond to practically all types of organic materials although the relative responses to the different types will vary.

For halogenated solvent operations where a single compound is predominant, the instrument can be calibrated with that compound and the results will be on that basis. Examples are some manufacturer's reported ranges for perchloroethylene are: (1) catalytic-oxidation, 27-13,000 ppmv; (2) flame ionization, 2-20,000 ppmv; and (3) infrared 0.5-200 ppm +, depending on configuration.

The cost of a monitoring instrument ranges from about $900 to $4,000, depending on the detection principle, operating features, and required accessories associated with the different instrument types and vendors. EPA contracted to examine several less expensive systems than discussed above at a dry cleaning plant in New York, however, they were determined to be inadequate because of erratic response.

D.2.2 Continuous Monitoring for Perchloroethylene from Adsorber Vents

One continuous monitoring instrument that would be useful for the low concentration levels of perchloroethylene present in well-controlled sources is a continuous flame ionization detector. However, due to the necessity for an analysis that does not include methane, this device would not be acceptable unless some provision could be made for subtracting the response due to methane. This response would normally be limited to the ambient concentration of methane.

EPA has contracted with an instrument manufacturer to develop a continuous monitor for perchloroethylene. The instrument is a form of gas filter correlation infrared analyzer, and its projected unit acquisition cost is $3,000-$5,000, provided that a minimum initial production of 50 units could be justified. While operational experience is limited, annual maintenance cost is estimated to be no greater than that for other infrared analyzers. This figure has been estimated at $1,000 for maintenance by in-plant personnel, and $2,000 to $3,000 if performed by a service contract.

D.3 PERFORMANCE TEST METHODS

D.3.1 Perchloroethylene from Adsorber Vent

If it is deemed necessary to conduct an emission test on the adsorber vent the Method 23: "Determination of Halogenated Organics from Stationary Sources" is recommended as the performance test method. In the final draft of this method, further leak checks were added as additional precautions against erroneous data. These additions were suggested by an EPA contractor that was studying the vinyl chloride test method. This contractor coincidentally performed the second and third dry cleaning emission data tests, and was previously aware of the need for exercising particular caution with respect to leak detection. No particular problems with the use of Method 23 should occur, provided that strict adherence is made to the leak check procedures.

The costs for conducting a Method 23 emission test in triplicate by a source testing contractor will depend on the length of the cleaning cycle and the distance to be travelled by testing personnel, and are accordingly estimated at $2,000 to $4,000 for a single unit installation. The testing costs per unit would be lower if several units at a single site were serially tested.

D.3.2 Perchloroethylene from Still Residues and Wet Waste Material from Regenerable Filters

The ASTM test method as described in D.1.2 is recommended as the performance test method. No problems with the use of this method with the minor modifications described in D.1.2 are anticipated.

The costs for conducting the analytical portion of this test on a triplicate sample is estimated at $300 to $500.

TECHNICAL REPORT DATA
(Please read Instructions on the reverse before completing)

1. REPORT NO. EPA-450/3-79-029a	2.	3. RECIPIENT'S ACCESSION NO.
4. TITLE AND SUBTITLE Perchloroethylene Dry Cleaners Background Information for Proposed Standards		5. REPORT DATE August 1980
		6. PERFORMING ORGANIZATION CODE
7. AUTHOR(S)		8. PERFORMING ORGANIZATION REPORT NO.
9. PERFORMING ORGANIZATION NAME AND ADDRESS TRW Environmental Engineering Division Energy Systems Group of TRW, Inc. Research Triangle Park, North Carolina 27711		10. PROGRAM ELEMENT NO.
		11. CONTRACT/GRANT NO. 68-02-3063
12. SPONSORING AGENCY NAME AND ADDRESS U.S. Environmental Protection Agency Office of Air Quality Planning and Standards Research Triangle Park, North Carolina 27711		13. TYPE OF REPORT AND PERIOD COVERED Draft
		14. SPONSORING AGENCY CODE EPA/200/04

15. SUPPLEMENTARY NOTES

16. ABSTRACT

Standards of Performance for the control of emission from perchloroethylene dry cleaning facilities are being proposed under the authority of section 111(b) of the Clean Air Act. These standards apply to new, modified, or reconstructed perchloroethylene dry cleaning facilities, the construction or modification of which began on or after the date of proposal. This draft document contains background information, environmental and economic impact assessments, and the rationale for the standards as proposed under 40 CFR Part 60, Subpart 00.

17. KEY WORDS AND DOCUMENT ANALYSIS

a. DESCRIPTORS	b. IDENTIFIERS/OPEN ENDED TERMS	c. COSATI Field/Group
Air Pollution Pollution Standards of Performance Perchloroethylene Dry Cleaners Perc	Air Pollution Control Organic Chemicals Solvents	

18. DISTRIBUTION STATEMENT Unlimited	19. SECURITY CLASS *(This Report)* Unclassified	21. NO. OF PAGES 165
	20. SECURITY CLASS *(This page)* Unclassified	22. PRICE

EPA Form 2220-1 (Rev. 4-77) PREVIOUS EDITION IS OBSOLETE