EPA-450/3-83-002

# Control Techniques for Nitrogen Oxides Emissions from Stationary Sources-Revised Second Edition

Emission Standards and Engineering Division

U.S. ENVIRONMENTAL PROTECTION AGENCY
Office of Air, Noise, and Radiation
Office of Air Quality Planning and Standards
Research Triangle Park, North Carolina 27711

January 1983

This report has been reviewed by the Emission Standards and Engineering Division of the Office of Air Quality Planning and Standards, EPA, and approved for publication. Mention of trade names or commercial products is not intended to constitute endorsement or recommendation for use. Copies of this report are available through the Library Services Office (MD-35), U.S. Environmental Protection Agency, Research Triangle Park, N.C. 27711, or from National Technical Information Services, 5285 Port Royal Road, Springfield, Virginia 22161.

TABLE OF CONTENTS


| Section | | Page |
|---|---|---|
| | LIST OF FIGURES | viii |
| | LIST OF TABLES | xi |
| | SUMMARY | S-1 |
| 1 | INTRODUCTION | 1-1 |
| 2 | CHARACTERIZATION OF $NO_x$ EMISSIONS | 2-1 |
| | 2.1 Definitions and Formation Theory | 2-1 |
| | 2.2 Sampling and Analysis Methods | 2-2 |
| | 2.3 Equipment Descriptions, Emissions Estimates, and Emission Factors by Application Sector | 2-3 |
| | 2.3.1 Stationary Fuel Combustion Sources | 2-7 |
| | 2.3.1.1 Utility Boilers | 2-7 |
| | 2.3.1.2 Industrial Boilers | 2-15 |
| | 2.3.1.3 Commercial and Residential Space Heating | 2-18 |
| | 2.3.1.4 Internal Combustion Sources | 2-18 |
| | 2.3.1.4.1 Stationary Reciprocating Internal Combustion Engines | 2-18 |
| | 2.3.1.4.2 Gas Turbines | 2-19 |
| | 2.3.2 Industrial Process Heating | 2-22 |
| | 2.3.2.1 Iron and Steel Industry | 2-26 |
| | 2.3.2.2 Glass Industry | 2-29 |
| | 2.3.2.3 Cement Manufacturing Industry | 2-29 |
| | 2.3.2.4 Petroleum Refining Industry | 2-31 |
| | 2.3.2.5 Brick and Ceramic Kilns | 2-31 |
| | 2.3.2.6 Noncombustion and Other Minor Industrial Sources | 2-34 |
| | 2.3.3 Solid Waste Disposal Sources | 2-34 |
| | 2.3.4 Other Miscellaneous $NO_x$ Sources | 2-45 |
| | REFERENCES FOR SECTION 2 | 2-49 |
| 3 | CONTROL TECHNIQUES | 3-1 |
| | 3.1 Combustion Modifications | 3-1 |
| | 3.1.1 General Concepts on $NO_x$ Formation and Control | 3-1 |
| | 3.1.1.1 Thermal $NO_x$ | 3-2 |
| | 3.1.1.2 Fuel $NO_x$ | 3-4 |
| | 3.1.1.3 Summary of Process Modification Concepts | 3-12 |
| | 3.1.2 Modification of Operating Conditions | 3-14 |
| | 3.1.2.1 Low Excess Air Combustion (LEA) | 3-14 |
| | 3.1.2.2 Off-Stoichiometric or Staged Combustion (OSC) | 3-15 |
| | 3.1.2.3 Flue Gas Recirculation (FGR) | 3-19 |
| | 3.1.2.4 Reduced Air Preheat Operation (RAP) | 3-20 |
| | 3.1.2.5 Reduced Firing Rate | 3-21 |
| | 3.1.2.6 Steam and Water Injection (WI) | 3-22 |
| | 3.1.2.7 Combinations of Techniques | 3-22 |

TABLE OF CONTENTS (Continued)


| Section | | Page |
|---|---|---|
| | 3.1.3 Equipment Design Modification | 3-24 |
| | 3.1.3.1 Burner Configuration | 3-24 |
| | 3.1.3.2 Burner Spacing | 3-28 |
| | 3.1.3.3 Advanced Burner/Furnace Designs | 3-28 |
| | 3.1.4 Fuel Modification | 3-30 |
| | 3.1.4.1 Fuel Switching | 3-31 |
| | 3.1.4.2 Fuel Additives | 3-34 |
| | 3.1.4.3 Fuel Denitrification | 3-34 |
| | 3.1.5 Alternate Processes | 3-35 |
| | 3.1.5.1 Fluidized Bed Combustion | 3-35 |
| | 3.1.5.2 Catalytic Combustion | 3-36 |
| | 3.1.5.3 Repowering | 3-37 |
| | 3.1.5.4 Combined Cycles | 3-38 |
| | 3.2 Combustion Flue Gas Treatment | 3-39 |
| | 3.2.1 Dry Flue Gas Treatment | 3-39 |
| | 3.2.1.1 Selective Catalytic Reduction (SCR) | 3-40 |
| | 3.2.1.2 Selective Noncatalytic Reduction (SNR) | 3-42 |
| | 3.2.1.3 Other Dry FGT Processes | 3-43 |
| | 3.2.2 Wet Flue Gas Treatment | 3-44 |
| | 3.3 Noncombustion Gas Cleaning | 3-45 |
| | 3.3.1 Plant Design for $NO_x$ Pollution Abatement at New Nitric Acid Plants | 3-45 |
| | 3.3.1.1 Absorption Column Pressure Control | 3-46 |
| | 3.3.1.2 Strong Acid Processes | 3-46 |
| | 3.3.2 Retrofit Design for $NO_x$ Pollution Abatement at New or Existing Nitric Acid Plants | 3-47 |
| | 3.3.2.1 Chilled Absorption | 3-47 |
| | 3.3.2.2 Extended Absorption | 3-48 |
| | 3.3.2.3 Wet Chemical Scrubbing | 3-48 |
| | 3.3.2.4 Catalytic Reduction | 3-50 |
| | 3.3.2.5 Molecular Sieve Adsorption | 3-53 |
| | REFERENCES FOR SECTION 3 | 3-54 |
| 4 | LARGE FOSSIL FUEL COMBUSTION PROCESSES | 4-1 |
| | 4.1 Utility Boilers | 4-1 |
| | 4.1.1 Control Techniques | 4-3 |
| | 4.1.1.1 Combustion Modifications | 4-3 |
| | 4.1.1.2 Flue Gas Treatment | 4-25 |
| | 4.1.2 Costs | 4-33 |
| | 4.1.2.1 Combustion Modification | 4-33 |
| | 4.1.2.2 Flue Gas Treatment | 4-38 |

TABLE OF CONTENTS (Continued)


| Section | | Page |
|---|---|---|
| | 4.1.3 Energy and Environmental Impact | 4-44 |
| | 4.1.3.1 Energy Impact | 4-44 |
| | 4.1.3.2 Environmental Impact | 4-48 |
| | 4.2 Industrial Boilers | 4-55 |
| | 4.2.1 Control Techniques | 4-56 |
| | 4.2.1.1 Combustion Modification | 4-59 |
| | 4.2.1.2 Post Combustion Techniques | 4-76 |
| | 4.2.2 Cost Impact | 4-78 |
| | 4.2.2.1 Combustion Modification Techniques | 4-78 |
| | 4.2.2.2 Post Combustion Techniques | 4-83 |
| | 4.2.3 Energy and Environmental Impact | 4-84 |
| | 4.2.3.1 Energy Impact | 4-84 |
| | 4.2.3.2 Environmental Impact | 4-87 |
| | 4.3 Prime Movers | 4-88 |
| | 4.3.1 Reciprocating Internal Combustion Engines | 4-88 |
| | 4.3.1.1 Control Techniques | 4-88 |
| | 4.3.1.2 Costs | 4-96 |
| | 4.3.1.3 Energy and Environmental Impact | 4-102 |
| | 4.3.2 Gas Turbines | 4-109 |
| | 4.3.2.1 Control Techniques | 4-114 |
| | 4.3.2.2 Costs | 4-118 |
| | 4.3.2.3 Energy and Environmental Impact | 4-122 |
| | 4.4 Summary | 4-124 |
| | REFERENCES FOR SECTION 4 | 4-127 |
| 5 | OTHER COMBUSTION PROCESSES | 5-1 |
| | 5.1 Space Heating | 5-1 |
| | 5.1.1 Emissions | 5-2 |
| | 5.1.2 Control Techniques | 5-4 |
| | 5.1.2.1 Tuning | 5-4 |
| | 5.1.2.2 Equipment Replacement | 5-8 |
| | 5.1.3 Costs | 5-14 |
| | 5.1.4 Energy and Environmental Impact | 5-16 |
| | 5.1.4.1 Energy Impact | 5-16 |
| | 5.1.4.2 Environmental Impact | 5-16 |
| | 5.2 Incineration and Open Burning | 5-18 |
| | 5.2.1 Municipal and Industrial Incineration | 5-18 |
| | 5.2.1.1 Emissions | 5-19 |
| | 5.2.1.2 Control Techniques | 5-19 |
| | 5.2.1.3 Costs | 5-22 |

TABLE OF CONTENTS (Continued)


| Section | | Page |
|---|---|---|
| | 5.2.2 Open Burning | 5-22 |
| | 5.2.2.1 Emissions | 5-22 |
| | 5.2.2.2 Control Techniques | 5-23 |
| | 5.3 Industrial Process Heating | 5-26 |
| | 5.3.1 Petroleum, Chemicals, and Natural Gas | 5-27 |
| | 5.3.1.1 Fired Heaters | 5-27 |
| | 5.3.1.1.1 Process Description | 5-27 |
| | 5.3.1.1.2 Emission and Control Techniques | 5-40 |
| | 5.3.1.2 Catalytic Crackers and CO Boilers | 5-68 |
| | 5.3.1.2.1 Process Description | 5-68 |
| | 5.3.1.2.2 Emissions and Control Technology | 5-68 |
| | 5.3.2 Metallurigical Processes | 5-70 |
| | 5.3.2.1 Process Description and Control Techniques | 5-70 |
| | 5.3.2.2 Emissions | 5-77 |
| | 5.3.3 Glass Manufacture | 5-79 |
| | 5.3.3.1 Process Description | 5-79 |
| | 5.3.3.2 Emissions | 5-83 |
| | 5.3.3.3 Control Techniques | 5-85 |
| | 5.3.4 Cement Manufacture | 5-85 |
| | 5.3.4.1 Process Description | 5-85 |
| | 5.3.4.2 Emissions | 5-87 |
| | 5.3.4.3 Control Techniques | 5-88 |
| | 5.3.5 Coal Preparation Plants | 5-89 |
| | REFERENCES FOR SECTION 5 | 5-91 |
| 6 | NONCOMBUSTION PROCESSES | 6-1 |
| | 6.1 Nitric Acid Manufacture | 6-2 |
| | 6.1.1 Dilute Nitric Acid Manufacturing Processes | 6-2 |
| | 6.1.1.1 Single Pressure Processes | 6-4 |
| | 6.1.1.2 Dual Pressure Processes | 6-4 |
| | 6.1.1.3 Nitric Acid Concentration | 6-7 |
| | 6.1.1.4 Direct Strong Nitric Acid Processes | 6-7 |
| | 6.1.2 Emissions | 6-10 |
| | 6.1.3 Control Techniques for $NO_x$ Emissions from Nitric Acid Plants | 6-11 |
| | 6.1.3.1 Chilled Absorption | 6-14 |
| | 6.1.3.2 Extended Absorption | 6-16 |
| | 6.1.3.3 Wet Chemical Scrubbing | 6-16 |
| | 6.1.3.4 Catalytic Reduction | 6-25 |
| | 6.1.3.5 Molecular Sieve Adsorption | 6-29 |
| | 6.1.4 Costs | 6-33 |

TABLE OF CONTENTS (Continued)


| Section | | Page |
|---|---|---|
| 6.2 | Nitric Acid Uses | 6-36 |
| 6.2.1 | Ammonium Nitrate Manufacture | 6-36 |
| 6.2.1.1 | Process Description | 6-36 |
| 6.2.1.2 | Emissions | 6-38 |
| 6.2.2 | Organic Oxidations | 6-38 |
| 6.2.2.1 | Process Description | 6-38 |
| 6.2.2.2 | Emissions | 6-39 |
| 6.2.2.3 | Control Techniques | 6-39 |
| 6.2.2.4 | Costs | 6-40 |
| 6.2.3 | Organic Nitrations | 6-40 |
| 6.2.3.1 | Process Description | 6-40 |
| 6.2.3.2 | Emissions | 6-46 |
| 6.2.3.3 | Control Techniques | 6-47 |
| 6.2.3.4 | Costs | 6-49 |
| 6.2.4 | Explosives: Manufacture and Use | 6-49 |
| 6.2.4.1 | Process Description | 6-49 |
| 6.2.4.2 | Emissions | 6-50 |
| 6.2.4.3 | Controls | 6-52 |
| 6.2.4.4 | Costs | 6-52 |
| 6.2.5 | Fertilizer Manufacture | 6-52 |
| 6.2.6 | Metals Pickling | 6-54 |
| REFERENCES FOR SECTION 6 | | 6-55 |
| APPENDIX A - SELECTED TABLES IN ENGLISH UNITS | | A-1 |
| APPENDIX B - PREFIXES FOR SI UNITS | | B-1 |
| APPENDIX C - GLOSSARY | | C-1 |

LIST OF FIGURES


| Figure | | Page |
|---|---|---|
| 2-1 | Stationary Sources Of $NO_x$ Emissions | 2-4 |
| 2-2 | Load Reduction Coefficient As A Function Of Boiler Load | 2-14 |
| 3-1 | Nitrogen And Sulfur Content Of U.S. Coal Reserves | 3-6 |
| 3-2 | Conversion Of Fuel N In Practical Combusters | 3-8 |
| 3-3 | Possible Fate of Fuel Nitrogen Contained in Coal Particles During Combustion | 3-9 |
| 3-4 | Conversion Of Nitrogen In Coal To $NO_x$ | 3-11 |
| 3-5 | Typical Arrangements For (B) Overfire Air, (A) Burners Out Of Service, And (C) Flue Gas Recirculation | 3-17 |
| 3-6 | Correlation Of $NO_x$ Emissions With Water Injection Rate For Natural Gas Fired Gas Turbine (Houston L&P Wharton No. 43 Unit) | 3-23 |
| 3-7 | Flow Diagram For Typical $NO_x$-Only SCR Process | 3-41 |
| 3-8 | Extended Absorption System On Existing Nitric Acid Plant | 3-49 |
| 4-1 | Baseline $NO_x$ Emissions - Coal-Fired Utility Boilers | 4-2 |
| 4-2 | Effect Of Combustion Modification Methods On Total Nitrogen Oxides Emissions And Boiler Efficiency | 4-60 |
| 4-3 | Effects Of Flue Gas Oxygen On The Formation Of $NO_x$ Emissions From Gas- And Oil-Fired Boilers | 4-64 |
| 4-4 | FGR Test Results on 5.1 MW (17.5 x $10^6$ Btu/hr) Packaged Watertube Boiler | 4-68 |
| 4-5 | Effects Of Air Preheat Temperature On $NO_x$ Emissions From Gas- And Oil-Fired Boilers | 4-70 |
| 4-6 | Effects Of Excess Air On $NO_x$ Emissions From Stoker Coal-Fired Boilers | 4-73 |
| 4-7 | Effects Of $NO_x$ Emissions Level On Fuel Penalty For Lightduty Trucks | 4-103 |
| 4-8 | Effect Of Derating On IC Engine HC Emissions | 4-106 |
| 4-9 | Effect of Retarding Ignition Timing On IC Engine HC Emissions | 4-106 |
| 4-10 | Effect Of Air-To-Fuel Ratio On IC Engine HC Emissions | 4-107 |
| 4-11 | Effect Of Decreased Manifold Air Temperature On IC Engine HC Emissions | 4-108 |
| 4-12 | Effect Of Water Injection On IC Engine HC Emissions | 4-108 |
| 4-13 | Smoke Levels Versus $NO_x$ Level For Large Bore Diesel Engines | 4-110 |
| 4-14 | $NO_x$ Emissions From Large Gas Turbines Without $NO_x$ Controls | 4-112 |
| 4-15 | $NO_x$ Emissions From Small Gas Turbines Without $NO_x$ Controls | 4-113 |
| 4-16 | $NO_x$ Emissions From Gas Turbines Having $NO_x$ Controls And Operating On Liquid Fuels | 4-117 |

LIST OF FIGURES (Continued)


| Figure | | Page |
|---|---|---|
| 5-1 | General Trend Of Smoke, Gaseous Emissions, And Efficiency Versus Stoichiometric Ratio For Residential Heaters | 5-3 |
| 5-2 | Effect of Excess Air On $NO_x$ Emissions From A 45.3 Mg (50 Ton) Per Day Batch-Feed Incinerator | 5-20 |
| 5-3 | Effect Of Underfire Air On $NO_x$ Emissions From A 227 Mg (250 Ton) Per Day Continuous Feed Incinerator | 5-21 |
| 5-4 | Examples Of Fired Heater Designs | 5-34 |
| 5-5 | Typical Burners By Type Of Fuel Burned | 5-39 |
| 5-6 | $NO_x$ Emissions From Standard Premix Burners | 5-42 |
| 5-7 | $NO_x$ Emissions From A Refinery Gas-Fired Reforming Heater With Low Excess Air Burners | 5-46 |
| 5-8 | $NO_x$ Emissions From A Single Burner, Forced Draft Debutanizer Bottoms Reboiler | 5-47 |
| 5-9 | Forced Draft Crude Heater With Staged Combustion Burners | 5-49 |
| 5-10 | $NO_x$ Emissions From A Natural Draft Naptha Reformer With Staged Combustion Air Burners | 5-51 |
| 5-11 | $NO_x$ Emissions From A Balanced Draft Crude Preheater With Staged Combustion Air Burners, Combustion Air Preheater 485 To 500K | 5-52 |
| 5-12 | $NO_x$ Emissions As A Function Of Stack Oxygen For A Distillate Oil-Fired, Natural Draft Process Heater | 5-54 |
| 5-13 | Residual Oil-Fired Horizontal Heater With Staged Combustion Air Burners | 5-55 |
| 5-14 | Residual Oil-Fired Natural Draft Cylindrical Heater | 5-56 |
| 5-15 | Residual Oil/Refinery Gas-Fired Natural Draft Heater | 5-58 |
| 5-16 | $NO_x$ Emissions From A Natural Draft Atmosphere Crude Heater With Staged Combustion Air Burners, Oil And Gas Fuel Combustion | 5-60 |
| 5-17 | $NO_x$ Emissions From A Natural Draft Vacuum Distillation Column Heater With Staged Combustion Air Burners, Oil And Gas Firing | 5-61 |
| 5-18 | $NO_x$ Emissions As A Function Of Time For An Open Hearth Furnace | 5-81 |
| 5-19 | The Effect Of Cement Kiln Temperature On $NO_x$ Emissions | 5-90 |
| 6-1 | Single Pressure Nitric Acid Manufacturing Process | 6-5 |
| 6-2 | Dual Pressure Nitric Acid Plant Flow Diagram | 6-6 |
| 6-3 | Nitric Acid Concentrating Unit | 6-8 |
| 6-4 | Process Flow Diagram For Direct Production Of Highly Concentrated Nitric Acid | 6-9 |
| 6-5 | Schematic Diagram Of The CDL/VITOK $NO_x$ Removal Process | 6-15 |
| 6-6 | TVA Chilled Absorption Process | 6-17 |
| 6-7 | Grande Pariosse Extended Absorption Process For $NO_x$ Treatment | 6-18 |
| 6-8 | Flow Diagram Of The MASAR Process | 6-20 |

LIST OF FIGURES (Continued)


| Figure | | Page |
|---|---|---|
| 6-9 | Process Flow Diagram For The Goodpasture Process. . . . . | 6-23 |
| 6-10 | Nonselective Catalytic Reduction System . . . . . | 6-26 |
| 6-11 | Molecular Sieve System. . . . . | 6-30 |
| 6-12 | Batch Process For The Manufacture Of Nitroglycerin (NG) . . . . . | 6-42 |
| 6-13 | Schmid-Meissner Continuous-Nitration Plant. . . . . | 6-43 |
| 6-14 | Biazzi Continuous-Nitration Plant . . . . . | 6-44 |
| 6-15 | Recovery Of Spent Acid. . . . . | 6-45 |
| 6-16 | Trinitrotoluene (Batch Process) Manufacturing Diagram . . . . . | 6-51 |

LIST OF TABLES


| Table | | Page |
|---|---|---|
| S-1 | Nationwide 1980 Nitrogen Oxide Emissions From Stationary Sources | S-2 |
| S-2 | Summary of $NO_x$ Control Techniques | S-4 |
| S-3 | Summary of Combustion Process Modification Concepts | S-5 |
| S-4 | Overall Evaluation of $NO_x$ Control Techniques for Combustion Sources | S-8 |
| S-5 | $NO_x$ Abatement Methods on New or Existing Nitric Acid Plants | S-13 |
| 2-1 | National Estimates of Nitrogen Oxide Emissions | 2-5 |
| 2-2 | 1980 Nitrogenoxide Emissions From Fuel Combustion in Stationary Sources By Category for Major Fuels | 2-6 |
| 2-3 | Nitrogen Oxide Emission Factors for Bituminous and Sub-Bituminous Coal Combustion | 2-10 |
| 2-4 | Nitrogen Oxide Emission Factors for Anthracite Coal Combustion Without Control Equipment | 2-11 |
| 2-5 | Nitrogen Oxide Emission Factors for Lignite Combustion Without Control Equipment | 2-11 |
| 2-6 | Nitrogen Oxide Emission Factors for Fuel Oil Combustion Without Control Equipment | 2-12 |
| 2-7 | Nitrogen Oxide Emission Factors for Natural Gas Combustion Without Control Equipment | 2-13 |
| 2-8 | Nitrogen Oxide Emission Factors for LPG Combustion Without Control Equipment | 2-16 |
| 2-9 | Nitrogen Oxide Emission Factors for Wood/Bark Waste Combustion Without Control Equipment | 2-16 |
| 2-10 | Nitrogen Oxide Emission Factors for Bagasse Combustion Without Control Equipment | 2-17 |
| 2-11 | Nitrogen Oxide Emission Factors for Residential Fireplaces | 2-17 |
| 2-12 | Nitrogen Oxide Emission Factors for Heavy-Duty, Natural Gas-Fired Pipeline Compressor Engines Without Control Equipment | 2-20 |
| 2-13 | Nitrogen Oxide Emission Factors for Stationary Large Bore Diesel and Dual Fuel Engines Without Control Equipment | 2-21 |
| 2-14 | Composite Nitrogen Oxide Emission Factors for the 1971 Population of Electric Utility Turbines Without Control Equipment | 2-23 |
| 2-15 | Nitrogen Oxide Emission Factors for Heavy-Duty, Natural Gas-Fired Pipeline Compressor Gas Turbine Engines Without Control Equipment | 2-24 |
| 2-16 | Nationwide Nitrogen Oxide Emissions Estimates From Major Industrial Process Sources, 1970 - 1980 | 2-25 |
| 2-17 | Nitrogen Oxide Emission Factors for Coke Manufacture Without Control Equipment | 2-27 |
| 2-18 | Nitrogen Oxide Emission Factors for Gray Iron Furnaces Without Control Equipment | 2-27 |

LIST OF TABLES (Continued)


| Table | | Page |
|---|---|---|
| 2-19 | Nitrogen Oxide Emission Factors for Steel Foundries Without Control Equipment | 2-28 |
| 2-20 | Nitrogen Oxide Emission Factors for Glass Manufacturing Melt Furnaces Without Control Equipment | 2-28 |
| 2-21 | Nitrogen Oxide Emission Factors for Glass Fiber Manufacturing Without Control Equipment | 2-30 |
| 2-22 | Nitrogen Oxide Emission Factors for Cement Manufacturing Without Control Equipment | 2-32 |
| 2-23 | Nitrogen Oxide Emission Factors for Petroleum Refineries | 2-33 |
| 2-24 | Nitrogen Oxide Emission Factors for Brick Manufacturing Without Control Equipment | 2-35 |
| 2-25 | Nitrogen Oxide Emission Factors for Nitric Acid Production | 2-36 |
| 2-26 | Nitrogen Oxide Emission Factors for Adiptic Acid Manufacture | 2-37 |
| 2-27 | Nitrogen Oxide Emission Factors for Explosive Manufacturing | 2-38 |
| 2-28 | Nitrogen Oxide Emission Factors for Miscellaneous Industrial Processes | 2-39 |
| 2-29 | Nitrogen Oxide Emission Factors for Refuse Incinerators Without Control Equipment | 2-43 |
| 2-30 | Nitrogen Oxide Emission Factors for Sewage Sludge Incinerators | 2-44 |
| 2-31 | Nitrogen Oxide Emission Factors for Auto Body Incinerators | 2-44 |
| 2-32 | Nitrogen Oxide Emission Factors for Waste Incineration in Conical Burners Without Control Equipment | 2-46 |
| 2-33 | Nitrogen Oxide Emission Factors for Open Burning of Nonagricultural Materials | 2-46 |
| 2-34 | Nitrogen Oxide Emission Factors for Forest Wildfires | 2-47 |
| 2-35 | Nitrogen Oxide Emission Factors for the Dentonation of Explosives | 2-48 |
| 3-1 | Factors Controlling the Formation of Thermal $NO_x$ | 3-5 |
| 3-2 | Summary of Combustion Process Modification Concepts | 3-13 |
| 3-3 | $NO_x$ Formation Potential of Some Alternate Fuels | 3-32 |
| 4-1 | Average $NO_x$ Reduction With Low Excess Air Firing | 4-5 |
| 4-2 | Average $NO_x$ Reduction With Burner Out of Service | 4-6 |
| 4-3 | Average $NO_x$ Reduction With Overfire Air | 4-7 |
| 4-4 | Average $NO_x$ Reduction With Flue Gas Recirculation | 4-8 |
| 4-5 | Average $NO_x$ Reduction With Reduced Firing Rate | 4-9 |
| 4-6 | Average $NO_x$ Reduction With Off Stoichiometric Combustion and Flue Gas Recirculation | 4-10 |
| 4-7 | Average $NO_x$ Reduction With Reduced Firing Rate and Off Stoichiometric Combustion | 4-11 |

LIST OF TABLES (Continued)


| Table | | Page |
|---|---|---|
| 4-8 | Average $NO_x$ Reduction With Load Reduction, Off Stoichiometric Combustion and Flue Gas Recirculation | 4-12 |
| 4-9 | Effect of Low $NO_x$ Operation on Coal-Fired Boilers | 4-14 |
| 4-10 | Effect of Low $NO_x$ Operation on Oil-Fired Boilers | 4-20 |
| 4-11 | Effect of Low $NO_x$ Operation on Gas-Fired Boilers | 4-23 |
| 4-12 | Summary of Utility Boiler Combustion Modification Control Costs | 4-35 |
| 4-13 | Projected Retrofit Control Requirements for Alternate $NO_x$ Emission Levels | 4-36 |
| 4-14 | $NO_x$ FGT Processes Selected for Evaluation By TVA in 1980 Study | 4-40 |
| 4-15 | Capital Investment Developed By TVA for Alternative FGT Systems | 4-42 |
| 4-16 | Annual Revenue Requirements Developed by TVA for Alternative FGT Systems | 4-42 |
| 4-17 | Summary of Capital Investments Developed in 1981 TVA Study | 4-43 |
| 4-18 | Summary of Annual Revenue Requirements Developed in 1981 TVA Study | 4-43 |
| 4-19 | a. Estimated Total Capital Requirement of Post Combustion $NO_x$ Control Processes<br>b. Estimated Levelized Cost Requirement of Post Combustion $NO_x$ Control Processes | 4-45 |
| 4-20 | Partial Summary of EPA/Acurex Combustion Modification Environmental Assessment Field Testing | 4-49 |
| 4-21 | Measured Change in the Concentrations of Selected Pollutants Across the EPA Pilot Plant SCR Reactors | 4-54 |
| 4-22 | Installed Capacity of U.S. Watertube Industrial Boilers By Unit Size and Fuel Type (in 1977) | 4-57 |
| 4-23 | Installed Capacity of U.S. Industrial Fire-Tube Boilers By Unit Size and Fuel Type (1977) | 4-58 |
| 4-24 | $NO_x$ Emission Control Techniques for Gas-Fired and Oil-Fired Industrial Boilers | 4-61 |
| 4-25 | $NO_x$ Emission Control Techniques for Coal-Fired Stoker Industrial Boilers | 4-62 |
| 4-26 | Safe Operating Levels for LEA | 4-65 |
| 4-27 | Estimated Cost of Low Excess Air Operation for New Boilers (1978 Dollars) | 4-80 |
| 4-28 | Estimated Cost of Staged Combustion Operation for New Boilers (1978 Dollars) | 4-81 |
| 4-29 | Estimated Cost of Flue Gas Recirculation Operation for New Boilers (1978 Dollars) | 4-82 |
| 4-30 | Annual Cost of $NO_x$ Control Systems Applied to Coal-Fired Boilers | 4-85 |
| 4-31 | Annual Cost of $NO_x$ Control Systems Applied to Oil-Fired Boilers | 4-85 |
| 4-32 | Annual Cost of $NO_x$ Control Systems Applied to Natural Gas-Fired Boilers | 4-85 |
| 4-33 | Summary of $NO_x$ Emission Control Techniques for Reciprocating Internal Combustion Engines | 4-89 |
| 4-34 | Effect of $NO_x$ Controls on Large-Bore Internal Combustion Engines | 4-91 |

LIST OF TABLES (Continued)


| Table | | Page |
|---|---|---|
| 4-35 | Control Techniques for Truck Size Diesel Engines [<375 kW (500 HP)] to Meet 1975 California 13.4 G/KWHR (10 G/HP-HR) Combined $NO_x$ and HC Level | 4-93 |
| 4-36 | 1975 Vehicle Emission Limits | 4-94 |
| 4-37 | Emission Control Techniques for Automotive Gasoline Engines | 4-94 |
| 4-38 | Emission Control Systems for Conventional Gasoline Internal Combustion Engines | 4-95 |
| 4-39 | Cost Impacts of $NO_x$ Controls for Large-Bore Engines | 4-98 |
| 4-40 | Typical 1974 Baseline Costs for (Large > 75 kW/cylinder) Engines | 4-98 |
| 4-41 | Typical Control Costs for Diesel-Fueled Engines Used in Heavy-Duty Vehicles (>2700 kg or 3 tons) | 4-99 |
| 4-42 | Estimates of Sticker Prices for Emissions Hardware from 1966 Uncontrolled Vehicles to 1976 Dual-Catalyst Systems | 4-100 |
| 4-43 | Representative Effects of $NO_x$ Control on CO Emissions from Internal Combustion Engines | 4-104 |
| 4-44 | Relationship Between Smoke, EGR, and Retard | 4-111 |
| 4-45 | Gas Turbine - Summary of Existing Technology - Combustion Modifications | 4-115 |
| 4-46 | Impact of $NO_x$ Emission Control on the Installed Capital Cost of Gas Turbines | 4-119 |
| 4-47 | Water Injection Costs, Mills/kWh | 4-120 |
| 4-48 | Representative Effects of $NO_x$ Controls on CO Emissions from Gas Turbines | 4-123 |
| 4-49 | Summary of the Effects of $NO_x$ Controls on Vapor Phase Hydrocarbon Emissions from Gas Turbines | 4-123 |
| 4-50 | Summary of $NO_x$ Controls Technology | 4-125 |
| 5-1 | Emission Factors for Residential and Commercial Heating Systems | 5-5 |
| 5-2 | Uncontrolled $NO_x$ Emissions from Residential Space Heating Systems | 5-6 |
| 5-3 | Comparison of Mean Emissions for Cyclic Runs on Residential Oil-Fired Units | 5-7 |
| 5-4 | Performance Summary of Low-$NO_x$ Control Equipment for Natural Gas-Fired Residential Heaters | 5-9 |
| 5-5 | Performance Summary of Low-$NO_x$ Control Equipment for Distillate Oil-Fired Residential Heaters | 5-10 |
| 5-6 | Cost Impact of $NO_x$ Control Alternatives | 5-15 |
| 5-7 | Effects of Low-$NO_x$ Operation on Incremental Emissions and System Performance for Residential Warm Air Furnaces | 5-17 |
| 5-8 | Annual Emissions of Nitrogen Oxides from Open Burning | 5-23 |
| 5-9 | Major Refinery Processes Requiring a Fired Heater | 5-28 |
| 5-10 | Typical Fired Heater Applications in the Chemical Industry | 5-31 |
| 5-11 | Basic Fired Heater Applications | 5-32 |

LIST OF TABLES (Continued)


| Table | | Page |
|---|---|---|
| 5-12 | Summary of $NO_x$ Test Data on a Standard Duel Fuel Burner | 5-44 |
| 5-13 | Retrofit Costs for Low-$NO_x$ Burners | 5-66 |
| 5-14 | $NO_x$ Emissions from Petroleum Refinery CO Boilers | 5-69 |
| 5-15 | Estimated $NO_x$ Emissions from Steel Mill Processes and Equipment | 5-78 |
| 5-16 | Effects of $NO_x$ Controls on Steel Industry $NO_x$ Emissions | 5-80 |
| 5-17 | $NO_x$ Emissions from Glass Melting Furnaces | 5-84 |
| 5-18 | Recommended Programs for Reducing Emissions and Energy Consumption in the Glass Industry | 5-86 |
| 6-1 | $NO_x$ Abatement Methods on New or Existing Nitric Acid Plants | 6-12 |
| 6-2 | Performance of Hercules Purasiv N Unit During Three Day Run | 6-31 |
| 6-3 | Performance of U. S. Army-Holston Purasiv N Unit During Three-Day Run | 6-32 |
| 6-4 | Capital and Operating Costs for Different $NO_x$ Abatement Systems in a 270 Mg/d Nitric Acid Plant | 6-34 |
| 6-5 | Annual Energy Requirements (TJ) for $NO_x$ Abatement Systems for a 270 Mg/d Nitric Acid Plant | 6-35 |
| 6-6 | Basis for Tables 6-4 and 6-5 | 6-35 |
| 6-7 | Annual Nitric Acid Consumption in the United States, 1974 | 6-37 |
| 6-8 | Estimated $NO_x$ Emissions from Organic Nitrations in 1970 | 6-48 |
| 6-9 | Emission Factors for Manufacture of Explosives | 6-53 |
| A6-4 | Capital and Operating Costs for Different $NO_x$ Abatement Systems in a 300 TPD Nitric Acid Plant | A-2 |
| A6-5 | Annual Energy Requirements ($10^9$ Btu) for $NO_x$ Abatement Systems for a 300 TPD Nitric Acid Plant | A-3 |

## CHARACTERIZATION OF $NO_x$ EMISSIONS

Manmade oxides of nitrogen are currently emitted at a rate of about 20 Tg (22 million tons/yr) in the United States. Stationary sources account for approximately 60 percent of these emissions, of which 97 percent are due to combustion sources. Combustion generated $NO_x$ is derived from two separate formative mechanisms, thermal $NO_x$ and fuel $NO_x$. Thermal $NO_x$ results from the thermal fixation of molecular nitrogen and oxygen in the combustion air. This is the dominant mechanism with the firing of clean fuels such as natural gas and distillate oil. Fuel $NO_x$ results from the oxidation of organically bound fuel nitrogen compounds. This can be the dominant mechanism with the firing of coal and high nitrogen residual oils. The rate of formation of both thermal $NO_x$ and fuel $NO_x$ is strongly dependent on the combustion process conditions. The emissions due to both mechanisms are increased by intense combustion resulting from rapid mixing of the air and fuel streams. Additionally, the emissions due to thermal $NO_x$ are sharply increased by increased local combustion temperatures.

Since equipment process conditions and fuel type are so important in determining $NO_x$ emissions, the characterization of emissions and the evaluation of control potential requires detailed classification of stationary sources according to factors known to influence $NO_x$ formation. Over 100 combinations of equipment type and fuel type are identified as having significantly different potential for $NO_x$ emissions and/or $NO_x$ control. The emission compilation for these sources for the year 1974 shows, however, that the 30 most significant equipment/fuel combinations are responsible for over 80 percent of stationary source emissions.

The total 1980 nationwide $NO_x$ emissions from stationary sources, grouped according to application sector, are shown in Table S-1. On an uncontrolled basis, utility boilers accounted for about 58 percent of stationary source emissions. These boilers fired 61 percent coal, 18 percent oil, and 21 percent gas. For all stationary sources, the firing of coal yielded about 51 percent of total $NO_x$, the firing of oil yielded about 8 percent, and the firing of natural gas yielded 30 percent. Wood, kerosene, LPG, and coke generated the majority of the remaining $NO_x$ emissions.

TABLE S-1. NATIONWIDE 1980 NITROGEN OXIDE EMISSIONS FROM STATIONARY SOURCES

| Stationary Source Category | $NO_x$ Emissions, Tg ($10^6$ tons) | | Percent of Total Emissions | |
|---|---|---|---|---|
| Fuel Combustion | | | | |
| Electric Utilities | 6.4 (7.0) | | 58 | |
| Industrial | 3.0 (3.3) | | 27 | |
| Commercial-Institutional | 0.3 (0.33) | | 2.7 | |
| Residential | 0.3 (0.33) | | 2.7 | |
| Fuel Combustion Total | | 10.0 (11) | | 91 |
| Industrial Processes | | 0.7 (0.77) | | 6.3 |
| Solid Waste Disposal | | | | |
| Incineration | 0.0 (0) | | 0 | |
| Open Burning | 0.1 (0.11) | | 0.9 | |
| Solid Waste Total | | 0.1 (0.11) | | 0.9 |
| Miscellaneous | | | | |
| Forest Fires | 0.2 (0.22) | | 1.8 | |
| Other Burning | 0.0 (0) | | 0 | |
| Misc. Organic Solvent | 0.0 (0) | | 0 | |
| Miscellaneous Total | | 0.2 (0.22) | | 1.8 |
| Total of All Categories | | 11.0 (12.1) | | 100 |

CONTROL TECHNIQUES

Current and advanced methods for stationary source $NO_x$ control operate either through suppression of $NO_x$ formation in the process or through physical or chemical removal of $NO_x$ from the stack gases. Both processes are effective with combustion sources, though most domestic experience has involved suppression of $NO_x$ formation. Candidate $NO_x$ suppression approaches include combustion process modification through alteration of operating conditions on existing systems or alternate design of new units; fuel modification through fuel switching, fuel denitrification, or fuel additives; and use of alternate combustion concepts such as catalytic combustion and fluidized bed combustion. Stack gas $NO_x$ removal systems, principally, using selective catalytic or noncatalytic reduction, have been extensively applied to combustion systems in Japan. However, experience in the United States has primarily been limited to a few pilot scale demonstrations of catalytic systems and some industrial applications of noncatalytic systems. Removal of $NO_x$ from stack gases is also effective with noncombustion sources of $NO_x$, chiefly chemical manufacturing. Candidate approaches for this application include catalytic reduction, wet chemical scrubbing, extended and chilled absorption, and adsorption with molecular sieves. A summary of general stationary source $NO_x$ control techniques is given on Table S-2.

Combustion process modifications have been extensively implemented on existing coal-, oil-, and gas-fired boilers to comply with local emission standards. Combinations of external control techniques such as low excess air firing, flue gas recirculation and staged combustion have yielded emission reductions of up to 60 percent compared to the uncontrolled, baseline emissions of units designed prior to the 1970s. Staged combustion techniques include biased burner firing, burners out of service, and overfire air injection. A summary of combustion modification concepts is given in Table S-3.

Currently, the most commonly applied low $NO_x$ technique for coal-fired utility boilers is staged combustion through the introduction of overfire air. This technique has been used in both new and retrofit applications, achieving $NO_x$ reductions of 30 to 50 percent compared to older baseline levels, or controlled emissions of 210 to 300 ng/J (0.5 to 0.7 lb/$10^6$ Btu). More recently, first generation low $NO_x$ burners have been installed on some units and found to be at least as effective as overfire air. In fact, new wall-fired units subject to the 1979 new source performance standards will generally rely on low $NO_x$ burners, enlarged furnace designs, and overfire air combustion. Corner fired units will rely on overfire and low excess air. The combination of overfire air with low $NO_x$ burners has resulted in 40 to 60 percent $NO_x$ reductions compared to older

TABLE S-2. SUMMARY OF $NO_x$ CONTROL TECHNIQUES

| Technique | Principle of Operation | Status of Development | Limitations | Applications | |
|---|---|---|---|---|---|
| | | | | Near-Term | Long-Term |
| Combustion Modification | Suppress thermal $NO_x$ through reduced flame temperature, reduced $O_2$ level; suppress fuel $NO_x$ through delaying fuel/air mixing or reduced $O_2$ level in primary flame zone | Operational for point sources; pilot-scale and full scale studies on combined modifications, operational problems and advanced design concepts for area sources | Degree of control limited by operational problems | Retrofit utility, industrial boilers, gas turbines; improved designs; new utility boilers | Optimized design area, point sources |
| Flue Gas/ Noncombustion Tail Gas Treatment | Additional absorption of $NO_x$ to $HNO_3$; conversion of $NO_x$ to $NH_4NO_3$; reduction of $NO_x$ to $N_2$ by catalytic treatment | Operational for existing and new nitric acid plants meeting NSPS; pilot scale feasibility studies for conventional combustion systems in U.S., but operational in Japan | Catalytic processes gaining experience with high particulate applications; tests with additional coal types needed. | Noncombustion sources (nitric acid plants) | Possible supplement to combustion modifications; simultaneous $SO_x/NO_x$ removal |
| Fuel Switching | Simultaneous $SO_x$ and $NO_x$ control by conversion to clean fuels; synthetic gas or oil from coal; SRC; methanol; hydrogen | Synthetic fuel plants in pilot-scale stage; commercial plants due by mid-1980's | Fuel cost differential may exceed $NO_x$, $SO_x$, control costs with coal | Negligible use | New point sources, (combined cycle) Convert area sources (residential) |
| Fuel Additives | Reduce or suppress NO by catalytic action of fuel additives | Inactive; preliminary screening studies indicated poor effectiveness | Large make-up rate of additive for significant effect; presence of additive as pollutant | Negligible use | Not promising |
| Fuel Denitrification | Removal of fuel nitrogen compounds by pretreatment | Oil desulfurization yields partial denitrification | Effectiveness for coal doubtful; no effect on thermal $NO_x$ | Negligible use | Supplement to combustion modification |
| Catalytic Combustion | Heterogeneously catalyzed reactions yield low combustion temperature, low thermal $NO_x$ | Pilot-scale test beds for catalyst screening, feasibility studies | Limited retrofit applications; requires clean fuels | Small space heaters | Possible use for residential heating, small boilers, gas turbines |
| Fluidized Bed Combustion | Coal combustion in solid bed yields low temperature, low $NO_x$ | Pilot-scale study of atmospheric and pressurized systems; focus on sulfur retention devices | Fuel nitrogen conversion may require control (staging); may require large make-up of limestone sulfur absorbent | Negligible use | Utility, industrial boilers beginning 1980's; possible combined cycle, waste fuel application |

TABLE S-3. SUMMARY OF COMBUSTION PROCESS MODIFICATION CONCEPTS

| Combustion Conditions | Control Concept | Applicable Equipment | Effect on Thermal $NO_x$ | Effect on Fuel $NO_x$ | Primary Applicable Controls | | |
|---|---|---|---|---|---|---|---|
| | | | | | Operational Adjustments | Hardware Modification | Major Redesign |
| Decrease primary flame zone $O_2$ level | Decrease overall $O_2$ level | Boilers, furnaces | Reduces $O_2$-rich, high-$NO_x$ pockets in the flame | Reduces exposure of fuel nitrogen intermediaries to $O_2$ | Low excess air firing | Flue gas recirculation (FGR) | |
| | Delayed mixing of fuel and air | Boiler, furnaces | Flame cooling and dilution during delayed mix reduces peak temp. | Volatile fuel N reduces to $N_2$ in the absence of oxygen | Burner adjustments | Low $NO_x$ burners | Optimum burner/ firebox design |
| | Increased fuel/ air mixing | Gas turbines | Reduces local hot stoichiometric regions in overall fuel lean combustion | Increases | | | New can design; premix, prevap. |
| | Primary fuel-rich flame zone | Boilers, furnaces, IC | Flame cooling in low-$O_2$, low-temp. primary zone reduces peak temp. | Volatile fuel N reduces to $N_2$ in the absence of oxygen | Burners out of service; biased burner firing | Overfire air ports, stratified charge | Burner/firebox design for two-stage combustion |
| Decrease peak flame temperature | Decrease adiabatic flame temperature | Boilers, furnaces, IC, gas turbines | Direct supression of thermal $NO_x$ mechanism | Ineffective | Reduced air preheat | Water injection, FGR | |
| | Decrease combustion intensity | Boilers, furnaces | Increased flame zone cooling yields lower peak temp. | Minor direct effect; indirect effect on mixing | Load reduction | | Enlarged firebox increased burner spacing |
| | Increased flame zone cooling/ reduce residence time | Boilers, furnaces | Increased flame zone cooling yields lower peak temp. | Ineffective | Burner tilt | | Redesign heat transfer surfaces, firebox aerodynamics |

baseline levels, or controlled emissions of 170 to 260 ng/J (0.4 to 0.6 lb/$10^6$ Btu). Similar control levels should also be achievable on large pulverized coal industrial boilers.

Current testing activities are attempting to identify and quantify potential operating problems with combustion modifications, such as increased waterwall tube corrosion under reducing conditions. Such problems are expected to be most prevalent for retrofit applications where the boiler was not designed for low $NO_x$ operation. However, the results of most short term corrosion tests to date have not indicated this to be a major problem.

Retrofit combustion process modifications have also been extensively applied to gas turbines. Water injection has been sucessfully implemented to achieve emission levels of 75 ppm at 15 percent excess oxygen. Current activity is focusing on development of dry controls using premixing, prevaporization and controlled mixing for application to new combustor can designs.

There has been only limited field implementation of combustion process modifications for other stationary combustion equipment e.g., small industrial and commercial boilers, residential and commercial space heating equipment, reciprocating internal combustion engines and industrial process furnaces. The following sequence is being pursued for $NO_x$ control development for these sources: control from operational fine tuning (e.g., low excess air firing, burner tuning), minor retrofit modifications (e.g., biased burner firing), extensive hardware changes (e.g., new burners) and major new equipment redesign (e.g., optimized heat transfer surfaces and burner aerodynamics).

Fuel switching for $NO_x$ control is not currently practiced due to the supply shortage of clean fuels. A number of alternate fuels such as methanol and low-heating-value gas have low $NO_x$ - forming potential and may be utilized in the 1980's. The economic incentive for alternate fuel use usually depends on factors other than $NO_x$ control, e.g., desulfurization cost tradeoffs, system efficiency.

Fuel oil denitrification, usually as an adjunct to oil desulfurization, shows promise for reducing fuel $NO_x$. This concept may be effective for augmenting combustion modifications for $NO_x$ control with the firing of residual oil but is expensive when applied for $NO_x$ reduction alone. Fuel additives are not directly effective for suppressing $NO_x$ emissions. Their use to suppress fouling and smoke emissions, however, may permit more extensive use of combustion control methods than would otherwise be practical.

Alternate combustion concepts under development include catalytic combustion and fluidized bed combustion (FBC). Lab-scale tests of catalytic combustion have demonstrated extremely low $NO_x$ emissions with clean fuels (1-5 ppm). This concept may see application in the 1980's to stationary gas turbines and space heating systems. Fluidized bed combustion pilot plants have demonstrated $NO_x$ emissions of the same order as conventional coal-fired power plants using process modifications for $NO_x$ control (170 ng/J, or, 0.4 lb $NO_2/10^6$ Btu). The potential for replacement of conventional utility and industrial boilers by FBC depends on a number of other factors such as $SO_x$ control cost tradeoffs and operational flexibility, e.g., load following.

Stack gas treatment for $NO_x$ removal has been implemented in the U.S. primarily on noncombustion sources. Here, an additional incentive is the recovery of $NO_2$ as a feedstock material. The most widely tested technique is catalytic reduction with selective or nonselective reducing agents. The short supply of reducing agents (methane, ammonia) coupled with the loss of tail gas $NO_2$ as a potential feedstock is causing interest to shift to alternate processes such as molecular sieve absorption and extended absorption.

Flue gas treatment (FGT) of combustion sources has been at a low level of development in the U.S. due largely to the lack of regulatory incentive. The developmental activity has recently accelerated, however, as a result of increased emphasis on stationary source $NO_x$ controls in the national $NO_x$ abatement program. Flue gas treatment could be effective in the 1980's to augment combustion process modifications on large sources if stringent emission control is required, for example, to comply with a potential short-term $NO_2$ air quality standard. Current developmental activity includes transferring FGT technology from Japan where stringent $NO_x$ controls are enforced and demonstrating this technology on pilot and full scale systems in the U.S. The most advanced processes include selective catalytic reduction and selective noncatalytic reduction. Other techniques under development include electron beam irradiation and wet scrubbing. However, the dry techniques currently appear to be the most cost effective, even when used in combination with wet flue gas desulfurization systems.

A summary evaluation of $NO_x$ control techniques for combustion sources is given in Table S-4.

## LARGE FOSSIL FUEL COMBUSTION PROCESSES

The three largest stationary emitters of $NO_x$ are electric power plant boilers (58 percent of the total), industrial boilers (10 percent) and prime movers, such as gas turbines and I.C. engines (17 percent). The most widely applied $NO_x$ reduction technique is modification of operating

TABLE S-4. OVERALL EVALUATION OF $NO_x$ CONTROL TECHNIQUES FOR COMBUSTION SOURCES

| Control Technique | Existing Applications | Effectiveness | Operational Impact | Projected Applications | Control Evaluation |
|---|---|---|---|---|---|
| Low excess air (LEA) | Retrofit and new utility boilers; some use in industrial boilers | 10% to 30% for thermal and fuel $NO_x$ | Increase in efficiency; amount limited by smoke or CO at very low EA | Widespread use for efficiency increase; incorporate into advanced designs all sources | Primary emphasis near-term and far-term applications (all sources); combined with OSC & burner mods for far-term appl. |
| Flue gas recirculation (FGR) | Retrofit use on many gas- and oil-fired utility boilers; demonstrated on some types of industrial boilers | 20% to 50% for thermal $NO_x$; no effect on fuel $NO_x$ | Possible flame instability; increased vibration | Possible use in new industrial boiler designs | Primary emphasis near-term applications large boilers; possible far-term industrial boiler application |
| Off-stoichiometric combustion (OSC) incl. OFA, BOOS, BBF | New and retrofit use on many utility boilers; demonstrated on some types of industrial boilers | 20% to 50% for thermal and fuel $NO_x$ | No major impact with new design; potential for flame instability, efficiency decrease, increased corrosion (coal-fired) with retrofit | Widespread use in large boilers; incorporate into advanced designs | Primary emphasis near-term and far-term applications all sources |
| Load reduction | Some retrofit use on gas and oil utility boilers; enlarged fireboxes on new coal units | 0% to 40% for thermal $NO_x$ | Decrease in efficiency and power output; limited by spare capacity and smoke formation | Enlarged fireboxes used in new unit design; limited use for retrofit | Secondary emphasis near-term applications (boilers); combined with OSC or burner mods for far-term appl. |
| Burner modifications | New and retrofit use on utility boilers; demonstrated on residential furnaces | 30% to 60% for thermal and fuel $NO_x$ | No major impact with new design; retrofit use constrained by firebox characteristics | Incorporate into advanced designs utility, industrial boilers, residential, process furnaces, GT; combine with OSC | Primary emphasis near- and far-term applications all sources |

TABLE S-4. OVERALL EVALUATION OF $NO_x$ CONTROL TECHNIQUES FOR COMBUSTION SOURCES

| Control Technique | Existing Applications | Effectiveness | Operational Impact | Projected Applications | Control Evaluation |
|---|---|---|---|---|---|
| Water, steam injection | Widely used for gas turbines | 30% to 90% for thermal $NO_x$ | Slight decrease in efficiency; limited by CO formation; power output increases | Use in new gas turbines; possible use in process furnaces | Primary emphasis near-term applications, gas turbines; possible far-term industrial process application |
| Reduced air preheat (RAP) | Widespread use in large turbocharged IC engines | 10% to 40% for thermal $NO_x$ | Slight decrease in efficiency, increase power output | Continued use in IC engines, applicable to some industrial and utility boilers | Secondary emphasis |
| Ammonia injection | Demonstrated on oil- and gas-fired industrial boilers | 40% to 70% for thermal and fuel $NO_x$ | Retrofit use limited; possible adverse environmental impact | Use in large boilers in some areas (1980's) | Primary emphasis far-term application to large boilers; evaluate impact with coal firing |
| Fuel denitrification | Oil denitrification accompanies desulfurization for some large boilers | 10% to 40% for fuel $NO_x$ | No adverse effects | Use of oil denitrification in large boilers as supplement to CM tech. | Secondary emphasis; evaluate as alternate fuel |
| Fuel additives | Fuel additives for $NO_x$ not used | Generally ineffective for direct $NO_x$ reduction | Byproduct emissions formed | Additives for corrosion, fouling, particulate, smoke, etc. can provide increased flexibility with CM tech. on large boilers | Secondary emphasis; consider impact of additives |
| Alternate and mixed fuels | Combustion of low nitrogen alternate fuels being demonstrated | Varies | Varies | Combined cycles and residential and commercial heating systems | Secondary emphasis far-term application; evaluate differential impact of fuel switching; transfer results of other E/A's. |

TABLE S-4. OVERALL EVALUATION OF $NO_x$ CONTROL TECHNIQUES FOR COMBUSTION SOURCES (Continued)

| Control Technique | Existing Applications | Effectiveness | Operational Impact | Projected Applications | Control Evaluation |
|---|---|---|---|---|---|
| Catalytic combustion | Only tested in experimental combustors | >90% for thermal $NO_x$ | Requires clean fuel; combustors limited by catalyst bed temp. capability | Gas turbines and residential and commercial heating systems | Primary emphasis far-term applications; compare impact to burner mods, alternate fuels |
| Fluidized bed combustion | Tested in pilot/prototype combustors | 20% to 50% for fuel $NO_x$ (pressurized FBC) | Requires sulfur acceptor | Combined cycle, utility boilers, industrial boilers (1980's) | Transfer results from FBC E/A; compare impact to combustion modifications, conventional combustion |
| Flue gas treatment (FGT) | Used in Japan on large boilers | 40% to >90% for fuel and thermal $NO_x$ | Requires temp. controls, catalyst, scrubbing soln., or oxidizing agent; possible adverse environmental impact | Possible supplement to CM for utility and large industrial boilers (1980's) | Secondary emphasis; transfer results of other studies to compare impact to combustion mods |

conditions. For utility boilers and large industrial boilers, techniques such as lowering excess air, off-stoichiometric or staged combustion, and, for gas- and oil-fired units, flue gas recirculation have resulted in $NO_x$ reductions of up to 60 percent making it possible for them to meet emissions regulations at costs typically ranging from $0.60 to $6 per kW (electric output, 1978$). The incremental costs of new burner and enlarged furnace designs installed on new units also fall within this range. Ongoing performance tests are investigating potential side effects of the modifications, such as increased corrosion and particulate emissions with coal firing.

Although less well developed for most industrial boilers, some combustion modifications for these sources are able to decrease $NO_x$ by up to 50 percent with no efficiency impairment or increase in particulate formation. The most successful techniques are lowering excess air, staged combustion, and flue gas recirculation.

The energy impacts of applying combustion modification $NO_x$ controls to utility and industrial boilers occur largely through the effects on unit fuel-to-steam efficiency. This is usually expressed as an increase or decrease in fuel consumption for a constant output. Generally, low excess air, flue gas recirculation and off-stoichiometric combustion have very little effect on efficiency. Low excess air controls actually improve fuel efficiency in many cases. In some cases, taking burners out of service may result in reduced capacity. Reduced air preheat has a slight impact, usually less than 1.5 percent increase in fuel use; although, significant reductions in air preheat (~150-200K) can have a much greater impact (~3-4 percent increase in fuel use). New designs should significantly reduce any adverse efficiency impacts.

Emissions of other pollutants, CO, HC, particulates, sulfates, and organics, can be altered by the use of $NO_x$ control. Generally, these changes have been acceptable. In some cases specific consideration of other emissions has been given in the design or method of application of the $NO_x$ control technique.

Prime movers include stationary reciprocating internal combustion engines and gas turbines. For the former, "dry" methods such as spark retard, air/fuel ratio change, and derating work well, providing $NO_x$ reductions of 10 to 40 percent while fuel consumption increases 2 to 15 percent. Water injection ("wet" control) is currently the most effective technique for gas turbines, reducing $NO_x$ up to 90 percent at costs of 0.4 to 14 mills/kWh (1975 costs), depending on the turbine's application. "Dry" control techniques show potential, but it will be a number of years before their development will be complete and they will be ready to be applied to large production turbines.

The energy impacts of applying $NO_x$ control to internal combustion engines and gas turbines are manifested almost exclusively through corresponding increases in fuel consumption. Since both types fire mainly clean fuels, the impact on other emissions is confined primarily to HC, CO, and particulates.

## OTHER COMBUSTION PROCESSES

Space heating, incineration and open burning, and industrial process heating are additional combustion sources of $NO_x$. Residential and commercial space heating contributes 5 percent of the nation's stationary $NO_x$ emissions. Emissions of CO and particulates from the major equipment types, residential and commercial warm air furnaces, can be controlled by burner maintenance and tuning. These techniques are not very effective for $NO_x$ reduction, however. The most promising prospect for $NO_x$ control in space heating systems is for new equipment applications. New low $NO_x$ systems are available at a cost of 10 percent or more above conventional systems. These systems are capable of reducing $NO_x$ emissions by more than 50 percent, while increasing operating efficiency by more than 5 percent.

There has been negligible application of combustion modification to incineration and open burning.

## NONCOMBUSTION PROCESSES

Noncombustion-generated $NO_x$, only 1.7 percent of stationary emissions, is produced mainly during nitric acid manufacture. $NO_x$ control methods include extended absorption, wet scrubbing, and catalytic reduction. Catalytic reduction was initially practiced but because of catalyst costs, fuel costs and changes in the operating conditions of nitric acid plants, greater use of the extended absorption and wet scrubbing processes have been employed more recently. Other minor noncombustion sources are mainly those that use nitric acid as a feedstock. Control methods are similar to those used for nitric acid manufacturing. Table S-5 gives a summary of tail gas abatement processes and applications.

TABLE S-5. $NO_x$ ABATEMENT METHODS ON NEW OR EXISTING NITRIC ACID PLANTS

| Process | Method | Comments | Licensors | Examples |
|---|---|---|---|---|
| Chilled Absorption | Increased solubility of $NO_x$ in chilled water | Usually cannot meet NSPS without other add-on technology or lowered acid product concentration | COL-VITOK | 2-318 Mg/d (350 tons/day) (with Gulf catalytic reduction add-on). Nitram, Tampa, Fla. |
| | | | TVA | 2-50 Mg/d (55 tons/day) plants at Muscle Shoals, (1972) |
| Extended Absorption | Increased absorption of $NO_x$ by additional absorption equipment | Inlet pressure of 760 kPa required (additional compressors may be required) | J. F. Pritchard (Grande Paroisse) | 327 Mg/d (360 tons/day) plant, Miss. Chemicals, Yazoo City, Miss. 1973.<br>272 Mg/d (300 tons/day) Holston Army Ammunition Plant, Kingsport, Tenn.<br>Cominco Plant, Beatrice Neb.<br>Kaiser, Tampa, Fla. and Bainbridge, Ohio |
| | | | P. M. Weatherly | 9 U.S. plants, 1 Japan plant (employs chilled absorption process) |
| | | | Chemico | 908 Mg/d (1000 tons/day) Monsanto, Pensacola, Fla. 1977. |
| | | Requires additional compressor | Uhde | 250 Mg/d (275 tons/day) plant, Allied Chemical, Omah, Neb. 1975 |
| | | | C&I Girdler CoFAZ | None built to date |
| Wet Chemical Scrubbing | Scrubbing tail gases with urea solution or ammonia to recover $NO_x$ | Performs better at high pressure but operable at lower pressures. Recovers ammonium nitrate and urea solution. Requires refrigeration. | MASAR (urea scrubbing) | Ill. Nitrogen Plt., Marsalles, Ill.<br>Air Products & Chem., Pace, Fla. |
| | | | Norsk Hydro (urea scrubbing) | Norsk Hydro, Proggunn, Norway |
| | | May require an evaporator to produce a concentrated ammonium nitrate by product. No refrigeration required. | Goodpasture (ammonia scrubbing) | 90 Mg/d (100 tons/day) Goodpasture plt., 1974. Dinmitt, Texas<br>Chevron Oil Co., Richmond, Calif. 1976<br>C.F. Industries, Fremont, N.D.<br>2 scrubbers for 7 plants totalling 544 mg/d (600 tons/day). Cyanamid, Welland, Ont. |

TABLE S-5. $NO_x$ ABATEMENT METHODS ON NEW OR EXISTING NITRIC ACID PLANTS (Concluded)

| Process | Method | Comments | Licensors | Examples |
|---|---|---|---|---|
| Catalytic Nonselective | Burns $NO_x$ and $O_2$ with $CH_4$ or $H_2$ to form $N_2$, $H_2O$, $CO_2$ | • Consumes natural gas, uneconomical if high $NO_x$ or $O_2$ content (also reacts with $O_2$)<br>• May be used in conjunction with extended absorption<br>• Energy recovery possible<br>• Works at low or high pressure | C&I Girdler | Olin, Lake Charles, La. (also, Weatherby plants) |
| | | | D. M. Weatherly | IMC Corp., Strelington, La. (1976) (with extended absorption). 817 Mg/d (900 tons/day), 1977. Columbia Nitrogen, Augusta, Ga. |
| | | | Chemico | Location not available |
| Catalytic Selective | Burns $NO_x$ with ammonia to form $N_2$ and $H_2O$; $O_2$ not affected | • Uses ammonia, can be expensive to operate<br>• Often used with extended absorption<br>• Works at low or high pressure<br>• Energy recovery usually not possible<br>• Can achieve very low emission if desired | Gulf | Nitram plants in Tampa, Fla., installed after CDL/VITOK process.<br>10 plants in U.S. |
| | | | Uhde (BASF catalysts) | Plants in Europe and Japan |
| | | | Mitsubishi | |
| Heterogeneous Catalysis | Oxidation of NO → $NO_2$ catalyzed by heterogeneous catalysis before absorption | Limited success | CDL/VITOK | Under development |
| Chemical Absorption | Oxidation with $KMnO_4$ ($KMnO_4$ electrolytically reclaimed | Uneconomical not presently offered | Carus Chemical | 2 plants in Japan, not currently offered in U.S. |
| Molecular Sieve | Absorption by molecular sieve, regeneration of the sieve by thermal cycling | • High energy and capital demands<br>• Hard to fit cycling of sieve into continuous plant operation | Purasiv N (Union Carbide) | 50 mg/d (55 tons/day) Hercules, Inc. Bersemer, Ala. 1974<br>50 mg/d (55 tons/day) U.S. Army, Holston, Kingston, Tenn. (inoperable, dismantled) |

# SECTION 1

# INTRODUCTION

The first edition of "Control Techniques for Nitrogen Oxide from Stationary Sources" (AP-67) was published in March 1970 as provided by the Air Quality Act of 1967. This first edition was used to support the National Ambient Air Quality Standards (NAAQS) for Nitrogen Dioxide as required by Sections 108 and 109 of the Clean Air Amendments of 1970. The first control techniques document was updated in January 1978 to include later developments in regulatory control of $NO_x$ and emission control techniques for stationary sources. Since the second edition, still further developments have occurred. These developments have been largely in the field of control of $NO_x$ emissions from combustion. Consequently, the current revisions have been limited to the combustion sections leaving the other parts of the text unchanged except for the addition of text to show the dates of the various cost data.

The $NO_x$ control technology development to support the implementation of the 1971 NAAQS standards has shown widespread advancement since the publication of the original AP-67 document. Efforts have proceeded on methods which suppress $NO_x$ formation through combustion process modification and on methods which remove $NO_x$ from the flue or tail gases through stack gas treatment. Work is continuing in these areas.

Combustion process modification is the commonly used method for control of stationary combustion sources, accounting for 98 percent of stationary source $NO_x$ control. Process modifications have been extensively applied to retrofit of existing utility and industrial boilers and gas turbines firing gas and oil. The significant role of fuel-bound nitrogen in $NO_x$ formation with the firing of coal and heavy oils was shown early in the control development effort. Current activity is concentrating on refinement of fuel $NO_x$ control methods for application to advanced designs of coal-fired combustion equipment. Progress has also been made in the design of low-$NO_x$ residential and commercial space heating systems.

Stack gas treatment is the commonly used method for control of $NO_x$ emissions from stationary noncombustion sources. These sources, primarily nitric acid plants, contribute less than 2 percent of nationwide stationary sources $NO_x$ emissions but can present a serious local hazard. Several control techniques, including extended absorption, catalytic reduction, wet scrubbing, and molecular

sieve absorption, have been developed and implemented on existing and new equipment. Reductions in $NO_x$ in excess of 95 percent have been demonstrated.

The purpose of this report is to update and revise the control techniques document issued in 1978 by incorporating improved emissions estimates and $NO_x$ control technology developments since that time. Emphasis is placed on identifying the significant stationary sources of $NO_x$ emissions, based on the most recent EPA emissions data (Section 2); summarizing the developmental status of candidate $NO_x$ control techniques (Section 3); and reviewing the effectiveness, cost and user experience with the implementation of $NO_x$ controls on large combustion sources (Section 4), other combustion sources (Section 5), and noncombustion sources (Section 6). Also included in these sections is information on the energy and environmental impacts of the various control techniques as required by Section 108(b)(1) of the Clean Air Act as amended in 1977.

This report is concerned only with the quantifying and controlling stationary source $NO_x$ emissions. The effects upon health and welfare of nitrogen oxides and their secondary atmospheric reaction products are considered in two related documents, "Air Quality Criteria for Ozone and Other Photochemical Oxidants," (EPA-600/8-78-004) and AP-84, "Air Quality Criteria for Nitrogen Oxides." The foregoing documents are being revised with publication scheduled within the next few months.

## SECTION 2

## CHARACTERIZATION OF $NO_x$ EMISSIONS

This section presents a nationwide inventory of emissions of oxides of nitrogen. Section 2.1 defines $NO_x$ and summarizes the basis of its occurrence in stationary source combustion. Section 2.2 describes the standard EPA method for analysis of source and ambient $NO_x$ concentrations. Section 2.3 describes specific stationary source equipment types and presents nationwide $NO_x$ emissions estimates and $NO_x$ emissions factors for each source equipment type.

### 2.1 DEFINITIONS AND FORMATION THEORY

Seven oxides of nitrogen are known to occur: NO, $NO_2$, $NO_3$, $N_2O$, $N_2O_3$, $N_2O_4$ and $N_2O_5$. Of these, nitric oxide (NO) and nitrogen dioxide ($NO_2$) are emitted in sufficient quantities in fuel combustion and chemical manufacturing to be significant in atmospheric pollution. In this document, "$NO_x$" refers to either or both of these two gaseous oxides of nitrogen. Nitrogen dioxide is deleterious to human respiratory functions and is a key participant in the formation of photochemical smog. Nitric oxide, taken alone, is relatively less harmful but is important as the main precursor to $NO_2$ formation in the atmosphere.

Approximately 95 percent of oxides of nitrogen from stationary combustion sources are emitted as nitric oxide. Two separate mechanisms, thermal $NO_x$ formation and fuel $NO_x$ formation, have been identified as generating $NO_x$ during fossil fuel combustion.

Thermal $NO_x$ results from the thermal fixation of molecular nitrogen and oxygen in the combustion air. Its rate of formation is extremely sensitive to local flame temperature and somewhat less so to local oxygen concentrations. Virtually all thermal $NO_x$ is formed at the region of the flame which is at the highest temperature. The $NO_x$ concentration is subsequently "frozen" at the level prevailing in the high temperature region by the thermal quenching of the combustion gases. The flue gas $NO_x$ concentrations are therefore between the equilibrium level characteristic of the peak flame temperature and the equilibrium level at the flue gas temperature. This kinetically controlled behavior means that thermal $NO_x$ emissions are dominated by local combustion conditions.

Fuel $NO_x$ derives from the oxidation of organically bound nitrogen in certain fuels such as coal and heavy oil. Its formation rate is strongly affected by the rate of mixing of the fuel and airstream in general and by the local oxygen concentration in particular. The flue gas $NO_x$ concentration due to fuel nitrogen is typically only a fraction (e.g., 20 to 60 percent) of the level which would result from complete oxidation of all nitrogen in the fuel. Thus, fuel $NO_x$ formation, like thermal $NO_x$ formation, is dominated by the local combustion conditions. Additionally, fuel $NO_x$ emissions are dependent on the nitrogen content of the fuel. The $NO_x$ emissions characterization detailed in this section, therefore, takes account of variations in equipment operating conditions and in fuel type which influences the emissions as well as the potential for control. Additional discussion on thermal and fuel $NO_x$ formation mechanisms is given in Section 3.1.

Oxides of nitrogen emitted in the byproduct streams of chemical manufacturing (nitric acid, explosives) are predominantly in the form of $NO_2$. The $NO_2$ concentration in the process vents is typically at the equilibrium level characteristic of the chemical compositions and temperatures required in the manufacturing process. The $NO_x$ emissions from noncombustion sources are then much less sensitive to minor process modifications than are combustion generated $NO_x$ emissions.

## 2.2 SAMPLING AND ANALYSIS METHODS

The standard EPA method for compliance testing of $NO_x$ from stationary sources is the phenoldisulfonic acid (PDS) method. This method was developed for the measurement of nitrate in solution by Chamot around 1910 (Reference 2-1). The specifications for the PDS method are given in Reference 2-2. Briefly, the method requires that a grab sample be collected in an evacuated flask containing a dilute sulfuric acid-hydrogen peroxide solution which absorbs the nitrogen oxides, except nitrous oxide ($N_2O$). The sample is then processed following the procedures of Reference 2-2. The absorbence of 420 nm wavelength light by the treated samples is then measured. A calibrated relationship between absorbence and $NO_2$ concentration is used to relate the measurement to the sample $NO_2$ concentration.

The advantages of the PDS method include the wide concentration range, minimum number of sample handling steps, and lack of interference with sulfur dioxide in the flue gases. The disadvantages are the long time elapsed between samples, a possible interference from halides, and the inherent problems with grab sampling.

Continuous type instrument methods are also used to measure $NO_x$ concentrations. The most common type of instrument method is the chemiluminescence method. This method is described in Reference 2-3. Performance specifications and specification test procedures for monitors of $NO_x$ emissions are given in Performance Specification 2, Appendix B, Part 60, Title 40, Code of Federal Regulations.

## 2.3 EQUIPMENT DESCRIPTIONS, EMISSIONS ESTIMATES, AND EMISSION FACTORS BY APPLICATION SECTOR

An overview of stationary sources of $NO_x$ emissions is provided in Figure 2-1. The first division is by application and the second by use sector. The six applications encompass all major sources and the cited sectors include all those of importance within each sector. Steam generation is by far the largest application on a capacity basis for both utility and industrial equipment while space heating is the largest application by number of installations. Internal combustion engines (both reciprocating and gas turbines) in the petroleum and related products industries have generally been limited to pipeline pumping and gas compressor applications. Process heating data are not as readily available, but the main sources appear to be process heaters in petroleum refineries, the metallurgical industry, and the drying and curing ovens in the broad-ranging ceramics industry. Incineration by both the municipal and industrial sectors is a small but noticeable source, primarily in urban areas. Noncombustion sources are largely within the area of chemical manufacture, more specifically nitric and adipic acids and explosives. The final description level in Figure 2-1 gives the important equipment types. Although these equipment categories do not include all the possible variations or hybrid units, the bulk of the equipment is included in the breakdown.

Table 2-1 summarizes annual nationwide emissions of nitrogen oxides from all sources for the period 1970 to 1980 (Reference 2-4). As shown, transportation (or mobile sources), stationary source fuel combustion, and industrial processes are the major $NO_x$ emission sources. In the following sections, equipment descriptions, nationwide $NO_x$ emissions estimates, and $NO_x$ emission factors will be presented for sources in the stationary fuel combustion and industrial processes categories. Transportation $NO_x$ sources are not addressed in this document.

Particular emphasis is placed in this report on stationary fuel combustion sources because of their large contribution to stationary source $NO_x$ emissions. Table 2-2 presents a breakdown of estimated 1980 nationwide $NO_x$ emissions from stationary fuel combustion sources by fuel type and consuming sector (Reference 2-4). The coal-fired electric utility sector and the gas-fired

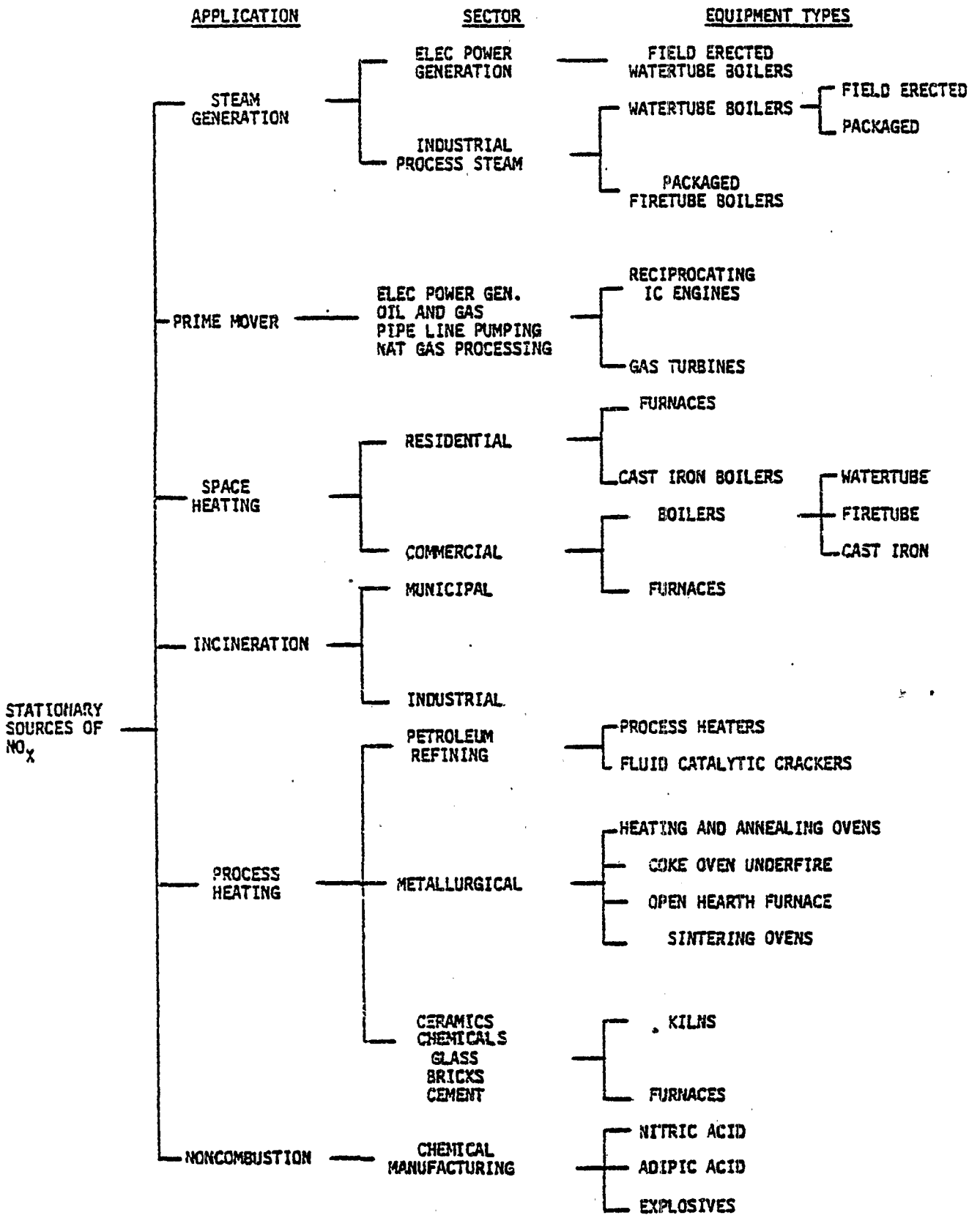


Figure 2-1. Stationary sources of $NO_x$ emissions.

TABLE 2-1. NATIONAL ESTIMATES OF NITROGEN OXIDE EMISSIONS, Tg ($10^6$ Tons)/yr (Reference 2-4)

| Source Category | 1970 | 1971 | 1972 | 1973 | 1974 | 1975 | 1976 | 1977 | 1978 | 1979 | 1980 |
|---|---|---|---|---|---|---|---|---|---|---|---|
| Transportation | | | | | | | | | | | |
| High Vehicles | 5.5(6.1) | 5.9(6.5) | 6.5(7.2) | 6.8(7.5) | 6.5(7.2) | 6.6(7.3) | 6.9(7.6) | 7.0(7.7) | 7.1(7.8) | 6.8(7.5) | 6.7(7.4) |
| Aircraft | 0.1(0.11) | 0.1(0.11) | 0.1(0.11) | 0.1(0.11) | 0.1(0.11) | 0.1(0.11) | 0.1(0.11) | 0.1(0.11) | 0.1(0.11) | 0.1(0.11) | 0.1(0.11) |
| Railroads | 0.6(0.66) | 0.6(0.66) | 0.7(0.77) | 0.7(0.77) | 0.7(0.77) | 0.7(0.77) | 0.7(0.77) | 0.7(0.77) | 0.7(0.77) | 0.8(0.88) | 0.8(0.88) |
| Vessels | 0.1(0.11) | 0.1(0.11) | 0.1(0.11) | 0.1(0.11) | 0.1(0.11) | 0.1(0.11) | 0.1(0.11) | 0.1(0.11) | 0.2(0.22) | 0.2(0.22) | 0.1(0.11) |
| Other Off-Highway Vehicles | 0.8(0.88) | 0.8(0.88) | 0.9(0.99) | 0.9(0.99) | 0.9(0.99) | 0.9(0.99) | 1.0(1.1) | 0.1(1.1) | 1.1(1.2) | 1.1(1.2) | 1.0(1.1) |
| Transportation Total | 7.1(7.8) | 7.5(8.3) | 8.3(9.1) | 8.6(9.5) | 8.3(9.1) | 8.4(9.2) | 8.8(9.7) | 8.9(9.8) | 9.2(10.1) | 9.0(9.9) | 8.7(9.6) |
| Stationary Source Fuel Combustion | | | | | | | | | | | |
| Electric Utilities | 4.5(5.0) | 4.7(5.2) | 5.0(5.5) | 5.3(5.8) | 5.3(5.8) | 5.2(5.7) | 5.6(6.2) | 6.0(6.6) | 5.9(6.5) | 6.2(6.8) | 6.4(7.0) |
| Industrial | 3.9(4.3) | 3.8(4.2) | 3.9(4.3) | 3.9(4.3) | 3.7(4.1) | 3.4(3.7) | 3.7(4.1) | 3.7(4.1) | 3.7(4.1) | 3.5(3.9) | 3.0(3.3) |
| Commercial-Institutional | 0.3(0.33) | 0.3(0.33) | 0.3(0.33) | 0.3(0.33) | 0.3(0.33) | 0.3(0.33) | 0.3(0.33) | 0.3(0.33) | 0.3(0.33) | 0.3(0.33) | 0.3(0.33) |
| Residential | 0.4(0.44) | 0.4(0.44) | 0.4(0.44) | 0.4(0.44) | 0.4(0.44) | 0.4(0.44) | 0.4(0.44) | 0.4(0.44) | 0.4(0.44) | 0.4(0.44) | 0.3(0.33) |
| Fuel Combustion Total | 9.1(10) | 9.2(10.1) | 9.6(10.6) | 9.9(10.9) | 9.7(10.7) | 9.3(10.2) | 10.4(11.4) | 10.0(11.0) | 10.3(11.3) | 10.4(11.4) | 10.0(11) |
| Industrial Processes | 0.7(0.77) | 0.7(0.77) | 0.7(0.77) | 0.7(0.77) | 0.7(0.77) | 0.7(0.77) | 0.7(0.77) | 0.7(0.77) | 0.7(0.77) | 0.7(0.77) | 0.7(0.77) |
| Solid Waste Disposal | | | | | | | | | | | |
| Incineration | 0.1(0.11) | 0.1(0.11) | 0.1(0.11) | 0.0(0) | 0.0(0) | 0.0(0) | 0.0(0) | 0.0(0) | 0.0(0) | 0.0(0) | 0.0(0) |
| Open Burning | 0.3(0.33) | 0.2(0.22) | 0.1(0.11) | 0.1(0.11) | 0.1(0.11) | 0.1(0.11) | 0.1(0.11) | 0.1(0.11) | 0.1(0.11) | 0.1(0.11) | 0.1(0.11) |
| Solid Waste Total | 0.4(0.44) | 0.3(0.33) | 0.2(0.22) | 0.1(0.11) | 0.1(0.11) | 0.1(0.11) | 0.1(0.11) | 0.1(0.11) | 0.1(0.11) | 0.1(0.11) | 0.1(0.11) |
| Miscellaneous | | | | | | | | | | | |
| Forest Fires | 0.2(0.22) | 0.2(0.22) | 0.2(0.22) | 0.1(0.11) | 0.2(0.22) | 0.1(0.11) | 0.2(0.22) | 0.2(0.22) | 0.2(0.22) | 0.2(0.22) | 0.2(0.22) |
| Other Burning | 0.1(0.11) | 0.1(0.11) | 0.1(0.11) | 0.0(0) | 0.0(0) | 0.0(0) | 0.0(0) | 0.0(0) | 0.0(0) | 0.0(0) | 0.0(0) |
| Misc. Organic Solvent | 0.0(0) | 0.0(0) | 0.0(0) | 0.0(0) | 0.0(0) | 0.0(0) | 0.0(0) | 0.0(0) | 0.0(0) | 0.0(0) | 0.0(0) |
| Miscellaneous Total | 0.3(0.33) | 0.3(0.33) | 0.3(0.33) | 0.1(0.11) | 0.2(0.22) | 0.1(0.11) | 0.2(0.22) | 0.2(0.22) | 0.2(0.22) | 0.0(0.22) | 0.2(0.22) |
| Total of All Categories | 17.6(19.4) | 18.0(19.8) | 19.1(21.0) | 19.4(21.3) | 19.0(20.9) | 18.6(20.5) | 19.8(21.8) | 20.3(22.3) | 20.5(22.6) | 20.4(22.4) | 19.7(21.7) |

TABLE 2-2. 1980 NITROGENOXIDE EMISSIONS FROM FUEL COMBUSTION IN STATIONARY SOURCES BY CATEGORY FOR MAJOR FUELS, $10^3$ tons ) (Reference 2-4)

| Fuel Type | Electric Utility | Industrial | Commercial-Institutional | Residential | Total |
|---|---|---|---|---|---|
| Anthracite Coal | 8.6 (9.5) | 4.8 (5.3) | 2.2 (2.4) | 1.5 (1.7) | 17.1 (18.8) |
| Bituminous Coal | 5149.4 (5664) | 398.6 (438) | 14.8 (16.3) | 3.0 (3.3) | 5565.8 (6122) |
| Residual Oil | 405.5 (446) | 162.3 (179) | 103.9 (114) | 0.0 (0) | 671.7 (739) |
| Distillate Oil | 38.2 (42) | 57.4 (63) | 37.1 (41) | 77.0 (85) | 209.7 (231) |
| Natural Gas | 775.3 (853) | 2239.7 (2464)[a] | 118.4 (130) | 215.5 (237) | 3348.9 (3684) |
| Wood | 0.0 (0) | 35.1 (39) | 0.0 (0) | 6.8 (7.5) | 41.9 (46) |
| Kerosene | 0.0 (0) | 11.4 (12.5) | 0.0 (0) | 9.6 (10.6) | 21.0 (23) |
| LPG | 0.0 (0) | 32.6 (36) | 0.0 (0) | 17.5 (19.3) | 50.1 (55) |
| Coke | 0.0 (0) | 16.5 (18.2) | 0.0 (0) | 0.0 (0) | 16.5 (18.2) |
| Coke-Oven Gas | 0.0 (0) | 5.0 (5.5) | 0.0 (0) | 0.0 (0) | 5.0 (5.5) |
| Bagasse | 0.0 (0) | 5.2 (5.7) | 0.0 (0) | 0.0 (0) | 5.2 (5.7) |
| TOTAL | 6377.0 (7015) | 2968.6 (3265) | 276.4 (304) | 330.9 (364) | 9952.9 (10,948) |

[a]Includes 1884 x $10^3$ Mg (2072 x $10^3$ tons) from stationary internal combustion engines and gas turbines.

industrial sector are the major emission sources in the fuel combustion category. In Section 2.2.1 the operations of the boiler sources in the fuel combustion category are described and $NO_x$ emission factors are presented for the various equipment types within each use sector.

In Section 2.3.2 the operations of the sources that constitute the industrial processes category are briefly discussed. Nationwide $NO_x$ emissions estimates for 1980 and $NO_x$ emission factors are presented for each major industrial source. Section 2.3.3 presents nationwide emissions estimates and emission factors where available for the minor industrial process sources of nitrogen oxides. The nationwide $NO_x$ emissions estimates are derived from unpublished data collected by the Monitoring and Data Analysis Division (MDAD) of EPA. The $NO_x$ emission factors were obtained from the EPA publication AP-42 (Reference 2-5) and its six supplements (References 2-6 to 2-11).

## 2.3.1 Stationary Fuel Combustion Sources

### 2.3.1.1 Utility Boilers

Most of the nation's electricity is generated in large fossil fueled central station power plants, which primarily consist of high-pressure field-erected watertube boilers in the 100 to 1300 $MW_e$ range serving turbine generators. On a thermal input basis, these boilers range in capacity from about 300 to 3700 MW (1,000 to 13,000 x $10^6$ Btu/hr). Industrial electric generating boilers will generally be smaller than the sizes identified in this range as indicated in the next subsection. Field-erected watertube boilers operate at steam temperatures up to 570°C (1050°F) and steam pressures up to 26 MPa (3800 psi). Depending upon manufacturer, units greater than about 2250 MW (7700 x $10^6$ Btu/hr) thermal input operate at supercritical steam pressures above 24 MPa (3500 psi) (Reference 2-12). In general, utility boiler thermal efficiencies range up to 90 percent of the heat liberated during fuel combustion. Approximately half of this heat energy is absorbed by radiant heat transfer to the furnace walls. However, because of the various thermodynamic cycle and mechanical losses, total power plant fuel-to- electric efficiencies are considerably lower, around 34 to 38 percent.

Although there are some differences among utility boiler designs in such factors as furnace volume, operating pressure, and configuration of internal heat transfer surface, the principle distinction is firing mode. This includes the type of firing equipment, the fuel handling system, and the placement of the burners on the furnace walls. The major firing modes are: single- or opposed-wall-fired, tangentially-fired, turbo-fired, and cyclone-fired. Vertically-fired units and

stoker units are used to a small extent in older steam generating stations. All of the major firing types can be designed to burn fossil fuels - gas, oil and coal, either singly or in combination. However, the cyclone unit is primarily designed to fire coal as the principal fuel. All of the coal-fired units use pulverized coal except for the cyclone units which use crushed coal and the stokers which accept lumps of coal.

In addition to differences in firing mode, coal, depending on its ash characteristics, is burned in either a dry-bottom or wet-bottom (slag tap) furnace. Dry-bottom units operate at temperatures below the ash-fusion temperature, and ash is removed as a solid. For wet-bottom furnaces the ash is removed as a molten slag through a bottom tap. Although wet bottom units were once used extensively in burning low ash-fusion temperature coals, they are less frequently used due to operational problems with low sulfur coals and because their high combustion temperatures promote $NO_x$ formation.

In single-wall firing (front-wall) burners are mounted normal to a single furnace wall. Furnace wall area generally limits the capacity of these units to about 1200 MW ($4100 \times 10^6$ Btu/hr) thermal input. When greater capacity is required, horizontally opposed-wall firing furnaces are normally used. In these units burners are mounted on opposite furnace walls. Generally, capacities for these units exceed 1200 MW thermal input (Reference 2-12). Burners on the single-wall and opposed-wall firing designs are usually register type where fuel and combustion air are combined in the burner throat.

Turbo-fired units are similar to the horizontally opposed-wall-fired units except that burners are mounted on opposed, downward inclined furnace walls. Fuel and combustion air are introduced into the combustion zone where rapid mixing occurs.

In tangential firing, arrays of fuel and air nozzles are located at each of the four corners of the combustion chamber. Each nozzle is directed tangentially to a small firing circle in the center of the chamber. The resulting spin of the four "flames" creates sufficient turbulence for thorough mixing of fuel and air in the combustion zone.

In the cyclone furnace design fuel and air are introduced circumferentially into a water-cooled, cylindrical combustion chamber to produce a highly swirling, high temperature flame. The cyclone was originally developed as a slagging furnace to burn low ash-fusion temperature coals, but has recently been used successfully on lignite. Relatively high levels of thermal $NO_x$ formation accompany the high temperatures of slagging operation. Due to the inability of this design to readily adapt to low $NO_x$ operation, this type of furnace is no longer being constructed.

Vertical-firing furnaces were developed for pulverized fuels prior to the advent of water-walled chambers. These units provide a long-residence time combustion which efficiently burns low-volatile fuels such as anthracite. Vertical-fired boilers are no longer sold, and relatively few of these units are found in the field.

Stoker-fired units are designed for solid fuel firing. Unlike liquid, gaseous or pulverized fuels which are burned in suspension, the stoker employs a fuel bed. This bed is either a stationary grate through which ash falls or a moving grate which dumps the ash into a hopper. The main types of stokers are overfeed and underfeed designs. Spreader stokers are overfeed designs and distribute the fuel by pneumatically or mechanically projecting the fuel into the furnace where it falls evenly over the fuel bed. Other overfeed stokers generally deposit fuel on a continuously moving grate. Underfeed designs introduce fuel beneath the fuel bed. Ash is pushed aside by the newly introduced fuel.

Tangential firing, single-wall and horizontally opposed-wall firing, and turbofurnace firing accounted for about 40 and 36 and 14 percent of the fuel consumed by utility boilers in the mid-1970s (Reference 2-13). In terms of numbers of units, their distribution was estimated at 19, 59 and 8 percent, respectively. Cyclone, vertical and stoker designs make up the remainder of utility units.

Recent trends indicate a continued strong movement toward pulverized coal-fired boilers. Many previously ordered oil-fired units are being converted to coal firing during the design phase. Historically, the trend was toward increasing unit capacities. However, this appears to have slowed in recent years with many utilities electing to install two small boilers rather than a single larger unit (Reference 2-12).

Nationwide $NO_x$ emissions estimates for 1980 from electric utility boilers are shown in Table 2-2 according to the type of fuel consumed (Reference 2-4). Tables 2-3 to 2-7 present $NO_x$ emission factors that are applicable to utility boilers burning coal, oil, and gas (Reference 2-11). For utility boilers Figure 2-2 should be used in conjunction with Table 2-7 to determine $NO_x$ emissions from natural gas combustion at reduced boiler loads.

TABLE 2-3. NITROGEN OXIDE EMISSION FACTORS FOR BITUMINOUS AND SUB-BITUMINOUS COAL COMBUSTION[a], (Reference 2-11)

| Firing Configuration | $NO_x$ Emission Factors[b] | |
|---|---|---|
| | kg/Mg of coal burned | (lb/ton of coal burned) |
| Pulverized Coal Fired[e] | | |
| Dry bottom | 10.5 [7.5][c] | (21) ([15]) |
| Wet bottom | 17 | (34) |
| Cyclone Furnace[e] | 18.5 | 37 |
| Spreader Stoker[f] | | |
| Uncontrolled | 7 | (14) |
| With flyash reinjection | 7 | (14) |
| No flyash reinjection | 7 | (14) |
| Overfeed Stoker[d,f] | | |
| Uncontrolled | 3.25 | (7.5) |
| After multiple cyclone | 3.25 | (7.5) |
| Underfeed Stoker[g] | | |
| Uncontrolled | 4.75 | (9.5) |
| After multiple cyclone | 4.75 | (9.5) |
| Handfired Units | 1.5 | (3) |

[a]Factors represent uncontrolled emissions unless otherwise specified.

[b]Total nitrogen oxides expressed as $NO_2$. To express these factors as NO, multiply by a factor of 0.66. All factors represent emissions at 60 to 110% load conditions.

[c]Bracketed value is for tangentially fired units.

[d]Includes traveling grate, vibrating grate, and chain grate stokers.

[e]Used primarily in utility and large industrial applications.

[f]Used primarily in large commercial and general industrial applications.

[g]Used primarily in commercial and domestic applications.

TABLE 2-4. NITROGEN OXIDE EMISSION FACTORS FOR ANTHRACITE COAL COMBUSTION WITHOUT CONTROL EQUIPMENT, (Reference 2-11)

| Type of Boiler | $NO_x$ Emission Factors | |
|---|---|---|
| | kg/Mg of coal burned | (lb/ton of coal burned) |
| Pulverized Coal Fired | 9 | (18) |
| Traveling Grate Stoker | 5 | (10) |
| Handfired Units | 1.5 | (3) |

TABLE 2-5. NITROGEN OXIDE EMISSION FACTORS FOR LIGNITE COMBUSTION WITHOUT CONTROL EQUIPMENT, (Reference 2-11)

| Type of Boiler | $NO_x$ Emission Factors[a] | |
|---|---|---|
| | kg/Mg of fuel burned | (lb/ton of fuel burned) |
| Pulverized Coal Fired | 6[b] | (12)[b] |
| Dry Bottom | | |
| Front Wall or Horizontally Opposed Wall | 7 | (14) |
| Tangential | (4) | (8) |
| Cyclone Furnace | 8.5 | (17) |
| Spreader Stoker | 3 | ( 6) |
| Other Stokers | 3 | ( 6) |

[a]Total nitrogen oxides expressed as $NO_2$.

[b]Nitrogen oxide emissions may be reduced by 20 to 40 percent with low excess air firing and/or staged combustion in front fired and opposed wall fired units and cyclones.

TABLE 2-6. NITROGEN OXIDE EMISSION FACTORS FOR FUEL OIL COMBUSTION WITHOUT CONTROL EQUIPMENT, (Reference 2-11)

| Boiler Type | $NO_x$ Emission Factors kg/$10^3$ liters of oil burned | (lb/$10^3$ gal of oil burned) |
|---|---|---|
| UTILITY BOILERS - Residual Oil[b] | | |
| Tangentially fired | 5 | (42) |
| Vertical fired | 12.6 | (105) |
| All others | 8 | (67) |
| INDUSTRIAL BOILERS | | |
| Residual Oil | 6.6[c] | (55)[c] |
| Distillate Oil | 2.4 | (20) |
| COMMERCIAL BOILERS | | |
| Residual Oil | 6.6 | (55) |
| Distillate Oil | 2.4 | (20) |
| RESIDENTIAL FURNACES | | |
| Distillate Oil | 2.2 | (18) |

[a]Total nitrogen oxides expressed as $NO_2$.

[b]Factors are for boilers at full load and normal ( 15%) excess air. Several combustion modifications can be employed for $NO_x$ reduction: (1) limited excess air can reduce $NO_x$ emissions 5-20%, (2) staged combustion 20-40%, (3) using low $NO_x$ burners 20-50%, and (4) ammonia injection can reduce $NO_x$ emissions 40-70% but may increase emissions of ammonia. Combinations of these modifications have been employed for further reductions in certain boilers.

[c]Nitrogen oxides emissions from residual oil combustion in industrial and commercial boilers are strongly related to fuel nitrogen content, estimated more accurately by the empirical relationship:

$$kg\ NO_2/10^3\ liters = 2.75 + 50\ (N)^2\ [lb\ NO_2/10^3\ gal = 22 + 400(N)^2]$$

where N is the weight % of nitrogen in the oil. For residual oils having high ( 0.5 weight %) nitrogen content, use 15 kg $NO_2/10^3$ liter (120 lb $NO_2/10^3$ gal) as an emission factor.

TABLE 2-7. NITROGEN OXIDE EMISSION FACTORS FOR NATURAL GAS COMBUSTION WITHOUT CONTROL EQUIPMENT, (Reference 2-11)

| Furnace Type | $NO_x$ Emission Factors[a] kg/$10^6$ $m^3$ of gas burned | (lb/$10^6$ $ft^3$ of gas burned) |
|---|---|---|
| Utility Boilers | 8800[b] | (550)[b] |
| Industrial Boilers | 2240 | (140) |
| Domestic and Commercial Boilers | 1600 | (100) |

[a]Total nitrogen oxides expressed as $NO_2$. Test results indicate that 95 wt. percent of $NO_x$ is NO.

[b]Use 4400 kg/$10^6$ $m^3$ (275 lb/$10^6$ $ft^3$) for tangentially fired units. At reduced loads, multiply this factor by the load reduction coefficient given in Figure 2-2.

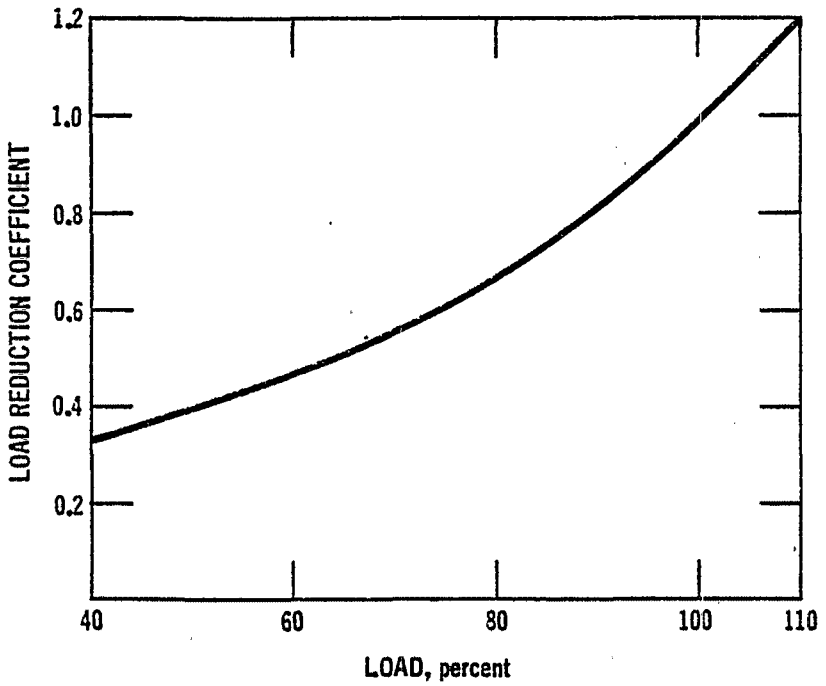


Figure 2-2. Load reduction coefficient as a function of boiler load. (Reference 2-11).

2.3.1.2 Industrial Boilers

This equipment category is comprised of industrial boilers ranging in capacity up to 250 MW thermal input (850 x $10^6$ Btu/hr). Industrial boilers are either field-erected or packaged units. The field-erected units are typically the units larger than 45 MW (150 x $10^6$ Btu/hr) and are quite similar in design and size to small utility boilers. Field erected boilers are typically of the watertube design. Packaged boilers, which are equipped and shipped from the factory complete with fuel burning equipment, are mainly watertube and firetube designs. Other designs such as cast iron, and shell type are also used in packaged designs. Each of these designs has a fairly distinct capacity range. Packaged boilers far out-number field- erected units, but their combined fuel consumption is less than that of field-erected boilers.

In watertube boilers, hot gases pass over tubes which are water or steam filled. The tubes line the combustion chamber walls and gain heat mainly by radiative heat transfer from the flame. Downstream the combustion chamber heat is absorbed convectively with tubes mounted across the hot gas flow. Almost all package boilers greater than about 8.8 MW (30 x $10^6$ Btu/hr) are watertube boilers.

Population statistics for 1977 indicate that 74 percent of the industrial boiler capacity was composed of watertube boilers and the remaining 26 percent were predominantely firetube boilers. Of the watertube boilers burning fossil fuels, 43 percent were predominately natural gas-fired, 32 percent were predominately oil-fired, 15 percent were stoker coal-fired, and 10 percent were pulverized coal-fired. Less than 5 percent of the industrial boiler capacity is supplied by non-fossil fuel-fired boilers.

In firetube boilers hot gases are directed from the combustion chamber through tubes which are submerged in water. Firetube boilers generally burn fuel oil and natural gas because the design is particularly sensitive to fouling with ash-containing fuels. Natural gas and distillate oil are the main fuels for the smaller watertube units. All fossil fuels are represented in the large watertube industrial boiler category. Recent sales statistics indicate that the firetube has diminished in sales in the past few years (Reference 2-14).

Nationwide $NO_x$ emissions estimates for 1980 from industrial boilers are shown in Table 2-2 according to the type of fuel consumed (Reference 2-4). Tables 2-3, 2-4, and 2-5 present $NO_x$ emissions factors that are applicable to industrial boilers burning coal. Tables 2-6, 2-7, and 2-8 present $NO_x$ emissions factors for industrial boilers burning oil, gas, and liquefied petroleum gas (LPG), respectively. Emission factors for $NO_x$ from industrial boilers burning wood waste and bagasse are presented in Tables 2-9 and 2-10 (References 2-5 and 2-11).

TABLE 2-8. NITROGEN OXIDE EMISSION FACTORS FOR LPG COMBUSTION WITHOUT CONTROL EQUIPMENT[a], (Reference 2-11)

| Type of Source and Fuel | $NO_x$ Emission Factors[b] kg/$10^3$ liter of LPG burned | (lb/$10^3$ gal of LPG burned) |
|---|---|---|
| Industrial Process Furnaces | | |
| Butane | 1.58 | (13.2) |
| Propane | 1.49 | (12.4) |
| Domestic and Commercial Furnaces | | |
| Butane | 1.13 | ( 9.4) |
| Propane | 1.05 | ( 8.8) |

[a]LPG emission factors calculated assuming emissions are the same, on a heat input basis, as for natural gas combustion.

[b]Nitrogen oxides expressed as $NO_2$.

TABLE 2-9. NITROGEN OXIDE EMISSION FACTORS FOR WOOD/BARK WASTE COMBUSTION WITHOUT CONTROL EQUIPMENT, (Reference 2-11)

| Type of Source | $NO_x$ Emission Factors[a] kg/Mg of fuel burned | (lb/ton of fuel burned) |
|---|---|---|
| Industrial Boilers | 0.7 | (1.5) |

[a]Nitrogen oxides expressed as $NO_2$.

TABLE 2-10. NITROGEN OXIDE EMISSION FACTORS FOR BAGASSE COMBUSTION WITHOUT CONTROL EQUIPMENT, (Reference 2-11)

| Type of Source | $NO_x$ Emission Factors | |
|---|---|---|
| | g/kg (lb/$10^3$ lb) of steam generated[a] | kg/Mg (lb/ton) of fuel burned[b] |
| Bagasse Boiler | 0.3 (0.3) | 0.6 (1.2) |

[a]Emission factors are expressed in terms of the amount of steam produced. These factors should be applied only to that fraction of steam resulting from bagasse combustion.

[b]Emissions are expressed in terms of wet bagasse, containing approximately 50 percent moisture, by weight. About 2 kg (4.4 lb) of steam are produced from 1 kg (2.2 lb) of wet bagasse.

TABLE 2-11. NITROGEN OXIDE EMISSION FACTORS FOR RESIDENTIAL FIREPLACES, (Reference 2-5)

| Fuel Type | $NO_x$ Emission Factors | |
|---|---|---|
| | kg/Mg of fuel burned | (lb/ton of fuel burned) |
| Wood | 0.5 | (1) |
| Coal | 1.5 | (3) |

### 2.3.1.3 Commercial and Residential Space Heating

This category is made up of commercial and residential warm air furnaces and boilers. Warm air furnaces are subdivided into space heaters, where the unit is located in the room which it heats, and central heaters which use ducts to transport and discharge warm air into the heated space. Space heaters comprise less than 10 percent of the nation's heaters. Central heaters make up the remainder of the warm air heater equipment sector. Combustion products pass through flue gas passages of the heat exchanger and exit through a flue to the atmosphere. Boilers used for residential space heating are generally cast iron designs. Residential warm air furnaces and cast iron boilers are available in sizes up to 0.12 MW ($4 \times 10^5$ Btu/hr). Larger units are mainly confined to the commercial and institutional sector.

Commercial and institutional systems are used for space heating and hot water generation. The equipment consists mainly of gas- and oil-fired warm air furnaces and firetube boilers. The rated heat input, or fuel consumption, of this equipment ranges from 0.12 MW ($4 \times 10^5$ Btu/hr) to 3.6 MW ($12.5 \times 10^6$ Btu/hr).

Fuels burned for residential and commercial space heating are primarily natural gas and distillate oil and much smaller amounts of coal, residual oil, LPG, and wood. Nationwide $NO_x$ emissions estimates for 1980 from commercial and residential combustion sources are given in Table 2-2 according to the type of fuel burned (Reference 2-4). Emission factor data for $NO_x$ emissions from commercial and residential sources are presented in Tables 2-3, 2-4, 2-6 to 2-8, and 2-11.

### 2.3.1.4 Internal Combustion Sources

This stationary fuel combustion subcategory consists of stationary reciprocating internal combustion engines and gas turbines. Nationwide $NO_x$ emissions for these two sources in 1980 were estimated to be $1884 \times 10^3$ Mg ($2072 \times 10^3$ tons) as shown in Table 2-2. Equipment descriptions and $NO_x$ emission factors for the internal combustion engine and gas turbine sources are presented in the following sections.

2.3.1.4.1 Stationary Reciprocating Internal Combustion Engines. Reciprocating IC engines for stationary applications range in capacity from 15 kW (20 hp) to 37 MW (50,000 hp). These engines are either compression ignition (CI) units fueled by diesel oil or a combination of natural gas and diesel oil (dual), or spark ignition (SI) fueled by natural gas or gasoline.

Stationary reciprocating IC engines use two methods to ignite the fuel-air mixture in the combustion chamber. In CI engines, air is first compression heated in the cylinder, and the diesel fuel is injected into the hot air where ignition is spontaneous. In SI engines, combustion is spark initiated with the natural gas or gasoline being introduced either by injection or premixed with the combustion air in a carburetted system. Either 2- or 4-stroke power cycle designs with various combinations of fuel charging, air charging, and chamber design are available.

Because reciprocating IC engine installations characteristically have a low physical profile (low buildings, short stacks, and little visible emissions), they are frequently located in or adjacent to urban centers where power demands are greatest and pollution problems most acute. These units are used in a variety of applications because of their relatively short construction and installation time and the fact that they can be operated remotely. Applications range from shaft power for large electrical generators to small air compressors and welders.

Table 2-12 presents $NO_x$ emission factors for a heavy-duty, stationary reciprocating internal combustion engine that is firing natural gas. These types of engines are generally used to power pipeline compressors. Emission factors are presented in terms of gas flow and in terms of energy produced (Reference 2-5). $NO_x$ emission factors for large bore diesel and dual fuel engines are given in Table 2-13 (Reference 2-11).

2.3.1.4.2 Gas turbines. Gas turbines are rotary internal combustion engines fueled by natural gas, diesel or distillate fuel oils, and occasionally residual or crude oils. These units range in capacity from 30 kW (40 hp) to over 74 MW (100,000 hp) and may be installed in groups for larger power output. The basic gas turbine consists of a compressor, combustion chambers, and a turbine. The compressor delivers pressurized combustion air to the combustors at compression ratios of up to 20 to 1. Injectors introduce fuel into the combustors and the mixture is burned with exit temperatures up to 1090°C (2000°F). The hot combustion gases are rapidly quenched by secondary dilution air and then expanded through the turbine which drives the compressor and provides shaft power. In some applications, exhaust gases are also expanded through a power turbine.

While simple-cycle gas turbines have only the three components described above, regenerative-cycle gas turbines also use hot exhaust gases (430 to 590°C, 800 to 1100°F) to preheat the inlet air between the compressor and the combustor. This makes it possible to recover some of the thermal energy in the exhaust gases and to increase thermal efficiency. A third type of turbine is the combined-cycle gas turbine. The combined-cycle turbine is basically a simple- cycle unit which

TABLE 2-12. NITROGEN OXIDE EMISSION FACTORS FOR HEAVY-DUTY, NATURAL GAS-FIRED PIPELINE COMPRESSOR ENGINES WITHOUT CONTROL EQUIPMENT, (Reference 2-5)

| Source | $NO_x$ Emission Factors[a] | |
|---|---|---|
| | g/kWh (lb/$10^3$ hph) | kg/$10^6$ scm (lb/$10^6$ scf)[c] |
| Reciprocating Internal Combustion Engine[b] | 15 (24) | 55,400 (3,400) |

[a]Total nitrogen oxides expressed as $NO_2$.

[b]These factors are for compressor engines operated at rated load. In general, $NO_x$ emissions will increase with increasing load and intake (manifold) air temperature and decrease with increasing air-fuel ratios (excess air rates) and absolute humidity.

[c]These factors calculated from the energy-based factors for reciprocating engines assuming a heating value of 41 MJ/scm (1100 Btu/scf) for natural gas and an average fuel consumption 10.6 MJ/kWh (7500 Btu/hph).

TABLE 2-13. NITROGEN OXIDE EMISSION FACTORS FOR STATIONARY LARGE BORE DIESEL AND DUAL FUEL ENGINES WITHOUT CONTROL EQUIPMENT, (Reference 2-11)

| Engine Type | $NO_x$ Emission Factors[a] |
|---|---|
| Diesel | |
| g/hph | 11 |
| (lb/$10^3$ hph) | (24) |
| g/ℓ[b] | 60 |
| (lb/$10^3$ gal)[b] | (500) |
| Dual Fuel | |
| g/hph | 8 |
| (lb/$10^3$ hph) | (18) |

[a]Total nitrogen oxides expressed as $NO_2$. Factors are for engines operated at rated load and speed.

[b]These factors calculated from the above factors assuming a heating value of 40 MJ/liter (145,000 Btu/gal) for oil, 41 MJ/scm (1100 Btu/scf) for natural gas, and an average fuel consumption of 9.9 MJ/kWh (7000 Btu/hph).

exhausts to a waste heat boiler to recover thermal energy from the exhaust gases. In some cases, the waste heat boiler is also designed to burn additional fuels to supplement steam production, a process which is referred to as supplementary firing.

Gas turbines have been extremely popular in the past decade because of the relatively short construction lead times, low cost, ease and speed of installation, and low physical profile (low buildings, short stacks, little visible emissions). In addition, features like remote operation, low maintenance, high power-to-weight ratio, and short startup time have added to their popularity. Primary applications of gas turbines include electricity generation (peaking and baseload), pumping, gas compression, standby electricity generation, and miscellaneous industrial uses.

National $NO_x$ emissions estimates for gas turbines and internal combustion engines combined are presented in Table 2-2. $NO_x$ emission factors for two uses of gas turbines are presented in Tables 2-14 and 2-15. Table 2-14 presents $NO_x$ emission factors for electric utility turbines, while Table 2-15 gives factors for $NO_x$ emissions from gas turbines used to power pipeline compressors (Reference 2-6).

### 2.3.2 Industrial Process Heating

Significant quantities of fuel are consumed by industrial process heating equipment in a wide variety of industries, including iron and steel production, glass manufacture, petroleum refining, chemical manufacturing, cement manufacture, and brick and ceramics manufacture. In addition, there are dozens of industrial processes that burn smaller amounts of fuel, such as coffee roasting, drum cleaning, painting curing ovens, and metal ore smelting, to name only a few. Brief process descriptions for some of the more significant $NO_x$ emission sources are given in the following paragraphs. Where available, national $NO_x$ emissions estimates and $NO_x$ emission factors are presented for the process heating categories. $NO_x$ emissions from the industrial process equipment sector are the most difficult to quantify of all stationary sources. This is largely due to the extreme diversity of equipment types currently in use. Nationwide $NO_x$ emissions estimates for the more significant industrial processes over the period 1970 to 1980 are presented in Table 2-16 (Reference 2-4).

TABLE 2-14. COMPOSITE NITROGEN OXIDE EMISSION FACTORS FOR THE 1971 POPULATION OF ELECTRIC UTILITY TURBINES WITHOUT CONTROL EQUIPMENT, (Reference 2-6)

| Emission Factor Basis | $NO_x$ Emission Factor |
|---|---|
| Time Basis | |
| Entire population kg (lb)/hr rated load[a] | 4.01 (8.84) |
| Gas-fired only kg (lb)/hr rated load[a] | 3.54 (7.81) |
| Oil-fired only kg (lb)/hr rated load[a] | 4.35 (9.60) |
| Fuel Basis | |
| Gas-fired only $kg/10^6\ m^3$ ($lb/10^6\ ft^3$) gas | 6615 (413) |
| Oil-fired only $kg/10^3$ liter ($lb/10^3$ gal) oil | 8.13 (67.8) |

[a]Rated load expressed in megawatts.

TABLE 2-15. NITROGEN OXIDE EMISSION FACTORS FOR HEAVY-DUTY, NATURAL GAS-FIRED PIPELINE COMPRESSOR GAS TURBINE ENGINES WITHOUT CONTROL EQUIPMENT, (Reference 2-6)

| Source | $NO_x$ Emission Factors[a] g/kWh | (lb/$10^3$ hph) | kg/$10^6$ scm | (lb/$10^6$ scf)[c] |
|---|---|---|---|---|
| Gas Turbines | 1.7 | (2.9) | 4,700 | (300) |

[a]Total nitrogen oxides expressed as $NO_2$.

[b]These factors are for compressor engines operated at rated load. In general, $NO_x$ emissions will increase with increasing load and intake (manifold) air temperature and decrease with increasing air-fuel ratios (excess air rates) and absolute humidity.

[c]These factors are calculated from the energy-based factors for gas turbines by assuming a heating value of 41 MJ/scm (1100 Btu/scf) of natural gas and an average fuel consumption of 14.1 MJ/kWh (10,000 Btu/hph).

TABLE 2-16. NATIONWIDE NITROGEN OXIDE EMISSIONS ESTIMATES FROM MAJOR INDUSTRIAL PROCESS SOURCES, 1970-1980, (Reference 2-4)

| Source Category | $NO_x$ Emissions, Gg ($10^3$ tons)/yr | | | | | | | | |
|---|---|---|---|---|---|---|---|---|---|
| | 1970 | 1972 | 1974 | 1975 | 1976 | 1977 | 1978 | 1979 | 1980 |
| Pulp Mills | 20(22) | 30(33) | 30(33) | 20(22) | 30(33) | 30(33) | 30(33) | 30(33) | 30(33) |
| Organic Chemicals Manufacturing | 60(66) | 60(66) | 60(66) | 60(66) | 50(55) | 50(55) | 50(55) | 60(66) | 40(44) |
| Ammonia Production | 40(44) | 40(44) | 40(44) | 40(44) | 40(44) | 50(55) | 40(44) | 50(55) | 50(55) |
| Nitric Acid Production | 150(165) | 140(154 | 130(143) | 110(121) | 110(121) | 100(110) | 100(110) | 100(110) | 100(110) |
| Petroleum Refining | 220(242) | 230(253) | 240(264) | 240(264) | 240(264) | 260(286) | 260(286) | 250(275) | 240(264) |
| Glass Manufacturing | 40(44) | 50(55) | 50(55) | 50(55) | 50(55) | 60(66) | 60(66) | 60(66) | 50(55) |
| Cement Manufacturing | 90(99) | 100(110) | 100(110) | 80(88) | 90(99) | 100(110) | 100(110) | 100(110) | 90(99) |
| Iron & Steel | 70(77) | 70(77) | 80(88) | 70(77) | 70(77) | 80(88) | 80(88) | 70(77) | 60(66) |
| TOTAL | 690(759) | 720(792) | 730(803) | 670(737) | 680(748) | 720(792) | 720(792) | 720(792) | 660(726) |

### 2.3.2.1 Iron and Steel Industry

The iron and steel industry is one of the major contributors to combustion-related process $NO_x$ emissions. The most important combustion processes are sinter lines, coke ovens, open hearth furnaces, soaking pits and reheat furnaces. The remaining combustion-related processes (pelletizing, heat treating, and finishing) are less important because they use relatively small amounts of fuel (Reference 2-15).

Sintering machines are used to agglomerate ore fines, flue dust, and coke breeze for charging of a blast furnace. The use of this operation is presently declining because of its inability to accommodate rolling mill scale which is contaminated with rolling oil.

Coke ovens produce metallurgical coke from coal by the distillation of volatile matter, thereby producing coke oven gas. The fuels commonly used in this process are coke oven gas and blast furnace gas. Although $NO_x$ emissions are minimized by slow mixing in combustion chambers, they are nonetheless substantial because of the very large quantity of fuel consumed in this process.

Open hearth furnaces are now being replaced in the U.S. steel industry by the basic oxygen furnace, however, they are still an important source of $NO_x$ emissions because of the very high combustion air preheat temperature, the high operating temperatures, and the practice of oxygen lancing.

Soaking pits and reheat furnaces are used to heat steel billets and ingots to correct working temperatures prior to forming. Current trends are toward continuous casting of molten metal, and the need for the soaking and reheat units is being reduced. At present, however, soaking pits and reheating furnaces still consume more fuel than any other single process in the steel industry. In spite of the fact that soaking pits and reheat furnaces are being phased out, consumption of process fuel continues to increase in the iron and steel industry as a whole.

Tables 2-17 to 2-19 present $NO_x$ emission factors for the various emission sources within the iron and steel industry. Table 2-17 presents emission factors for the coking process. Table 2-18 gives $NO_x$ emission factors that are applicable to gray iron furnaces. $NO_x$ emission factors for steel foundry operations are presented in Table 2-19. All $NO_x$ emission factors for iron and steel processes were obtained from Reference 2-9.

TABLE 2-17. NITROGEN OXIDE EMISSION FACTORS FOR COKE MANUFACTURE WITHOUT CONTROL EQUIPMENT, (Reference 2-9)

| Type of Operation[b] | $NO_x$ Emission Factors[a] | |
|---|---|---|
| | kg/Mg of coal charged | (lb/ton of coal charged) |
| Coal Charging | 0.015 | (0.03) |
| Door Leaks | 0.005 | (0.01) |

[a]Total nitrogen oxides expressed as $NO_2$.

[b]No data available for $NO_x$ emissions from other coke manufacturing sources including coal preheaters, coke pushing, quenching, and combustion stacks.

TABLE 2-18. NITROGEN OXIDE EMISSION FACTORS FOR GRAY IRON FURNACES WITHOUT CONTROL EQUIPMENT, (Reference 2-9)

| Furnace Type[a] | $NO_x$ Emission Factors | |
|---|---|---|
| | kg/Mg of gray iron produced | (lb/ton of gray iron produced) |
| Electric Arc | 0.02 - 0.3 | (0.04 - 0.6) |

[a]No data available for $NO_x$ emissions from other types of furnaces including cupola, electric induction, and reverberatory.

TABLE 2-19. NITROGEN OXIDE EMISSION FACTORS FOR STEEL FOUNDRIES WITHOUT CONTROL EQUIPMENT[a], (Reference 2-9)

| Furnace Type[b] | $NO_x$ Emission Factors kg/Mg of metal processed | (lb/ton of metal processed) |
|---|---|---|
| Electric Arc | 0.1 | (0.2) |
| Open Hearth | 0.005 | (0.01) |

[a]The streams measured for $NO_x$ emissions had controls for particulates, however, these would not have any effect on reducing $NO_x$.

[b]No $NO_x$ emissions data were available for open hearth oxygen lanced and electric induction furnaces.

TABLE 2-20. NITROGEN OXIDE EMISSION FACTORS FOR GLASS MANUFACTURING MELT FURNACES WITHOUT CONTROL EQUIPMENT, (References 2-6)

| Type of Glass | $NO_x$ Emission Factors[a] kg/Mg of glass produced | (lb/ton of glass produced) |
|---|---|---|
| Container | 1.6 - 4.5, avg. 3.1 | (3.3 - 9.1, avg. 6.2) |
| Flat | 2.8 - 5.2, avg. 4 | (5.6 - 10.5, avg. 8) |
| Pressed and Blown | 0.4 - 10.0, avg. 4.3 | (0.8 - 20.0, avg. 8.5) |

[a]$NO_x$ emissions from forming and finishing in all three glass categories are negligible.

2.3.2.2 Glass Industry

In the glass industry, melting furnaces and annealing lehrs are the two fuel combustion processes of greatest importance. Melters in the glass industry are continuous reverbatory furnaces fueled by natural gas and oil. Coal is not suitable for these furnaces because of its inherent impurities. Annealing lehrs control the cooling of the formed glass to prevent stains from occurring. Some lehrs are direct-fired by atmospheric, premix, or excess-air burners. About 80 percent of the total industry fuel consumption goes for melting, while annealing lehrs consume about 15 percent. There is a current trend in the glass industry towards electric melters, or at least electrically assisted conventional melters. But until it becomes clearer which fuels are going to be available in the future, no definite trends will emerge. Present trends toward fuel oil in place of natural gas have begun as a result of natural gas shortages and price increases.

As shown in Table 2-16, nationwide $NO_x$ emissions from the glass industry were estimated to be 50 Gg (55 x $10^3$ tons) in 1980. Nitrogen oxide emission factors for basic glass manufacturing are presented in Table 2-20. Table 2-21 presents $NO_x$ emission factors specifically for glass fiber manufacturing, a subcategory of the glass manufacturing industry. Emission factors for both tables were obtained from Reference 2-6.

2.3.2.3 Cement Manufacturing Industry

Cement kilns are the major combustion processes in the cement industry. These kilns are rotary cylindrical devices up to 230 m (750 feet) in length which contain a feedstock combination of calcium, silicon, aluminum, iron, and various other trace metals. This mixture of elements in the form of various combinations of clay, shale, slate, blast furnace slag, iron ore, silica sand, limestone, and chalk slowly moves through the kiln as products of fossil fuel combustion move in an opposite direction. Temperatures of the material during the process may reach 1480°C (2700°F).

Coal, fuel oil, and natural gas are the main fuels used in cement kilns. As of 1977 natural gas accounted for 45 percent of the fuel consumed, coal for 40 percent, and fuel oil for 15 percent. The major effluent stream for this process is the exhaust gas which passes through the entire length of the kiln and may entrain additional particulate or trace metals from the kiln feedstock. Cement industry figures for the past 20 years show that the industry has grown at an average rate of 1.9 percent annually (Reference 2-16).

TABLE 2-21. NITROGEN OXIDE EMISSION FACTORS FOR GLASS FIBER MANUFACTURING WITHOUT CONTROL EQUIPMENT, (Reference 2-6)

| Source | $NO_x$ Emission Factors kg/Mg of material processed | (lb/ton of material processed) |
|---|---|---|
| Glass Furnace - Wood | | |
| Electric | 0.14 | (0.27) |
| Gas-Regenerative | 2.5 | (5) |
| Gas-Recuperative | 0.85 | (1.7) |
| Gas-Unit Melter | 0.15 | (0.3) |
| Glass Furnace - Textile | | |
| Regenerative | 10 | (20) |
| Recuperative | 10 | (20) |
| Unit Melter | 10 | (20) |
| Oven Curing - Wool | | |
| Rotary Spun | 0.55 | (1.1) |
| Flame Attenuation | 1.0 | (2) |
| Rotary Spun Cooling - Wool | 0.15 | (0.3) |
| Oven Curing and Curing - Textile | 1.3 | (2.6) |

Nationwide $NO_x$ emissions estimates from cement manufacturing are given in Table 2-16. Table 2-22 gives $NO_x$ emission factors for both wet and dry process cement manufacturing. All emission factors were obtained from Reference 2-5.

2.3.2.4 Petroleum Refining Industry

A wide variety of process combustion takes place in the petroleum refining industry, including catalyst regenerating in the catalytic cracker, catalytic reforming, delayed coking, and hydro-treating and flaring of waste gases. Catalytic cracking is required for a large portion of gasoline production. Fuel is consumed in this operation in the catalyst regeneration procedure which removes coke and tars from the catalyst surface. Temperatures during this process are moderate, ranging from 570 to 650°C (1050 to 1200°F), but fuel requirements are on the order of 829 kJ/ (125,000 Btu/Bbl) feedstock. Future growth of catalytic cracking will depend on the national energy and environmental policies, and particularly on the demand for low sulfur fuel oil.

Catalytic reforming is a process where paraffinic hydrocarbons are converted into aromatic compounds. Delayed coking is an energy extensive process which uses severe cracking to convert residual pitch and tar to gas, naptha, heating oil and other more valuable products. Hydrotreating is a process designed to remove impurities such as sulfur, nitrogen, and metals to prepare cracking or reformer feedstock.

Process heating fuels used by the refinery industry are primarily natural gas and refining gas, along with some residual oils and petroleum coke. Projections are for a 2.9 percent annual increase in process heating to 1985 (Reference 2-16). The fuel mix expected for the future is highly dependent on both availability and costs of the preferred fuels, and is therefore very difficult to project until national energy priorities are established and the question of natural gas price regulations is settled.

Nationwide $NO_x$ emissions estimates from petroleum refineries are presented in Table 2-16 (Reference 2-4). References 2-4 and 2-5 were used to obtain $NO_x$ emission factors for petroleum refinery sources. Table 2-23 presents the petroleum refinery emission factor data.

2.3.2.5 Brick and Ceramic Kilns

Brick and ceramic kilns for curing clay products are another major user of process heating fuels. Products of these kilns include structural bricks, structural and facing tile, vitrified

TABLE 2-22. NITROGEN OXIDE EMISSION FACTORS FOR CEMENT MANUFACTURING WITHOUT CONTROL EQUIPMENT[a], (Reference 2-5)

| Process Source | $NO_x$ Emission Factors kg/Mg of cement produced | (lb/ton of cement produced) |
|---|---|---|
| Dry Process Kilns | 1.3 | (2.6) |
| Wet Process Kilns | 1.3 | (2.6) |

[a]These emission factors include emissions from fuel combustion, which should not be calculated separately.

TABLE 2-23. NITROGEN OXIDE EMISSION FACTORS FOR PETROLEUM REFINERIES, (References 2-4, 2-5)

| Refinery Process[a] | $NO_x$ Emission Factor[b] |
|---|---|
| FLUID CATALYTIC CRACKING UNITS | |
| Uncontrolled | |
| $kg/10^3$ liters fresh feed | 0.107 - 0.416, avg. = 0.204 |
| ($lb/10^3$ bbl fresh feed) | (37.1 - 145, avg. = 71) |
| ESP and CO Boiler[c] | |
| $kg/10^3$ liters fresh feed | 0.107 - 0.416, avg. = 0.204[d] |
| ($lb/10^3$ bbl fresh feed) | (37.1 - 145, avg. = 71) |
| MOVING-BED CATALYTIC CRACKING UNITS | |
| $kg/10^3$ liters fresh feed | 0.014 |
| ($lb/10^3$ bbl fresh feed) | (5) |
| COMPRESSOR ENGINES | |
| Reciprocating Engines | |
| $kg/10^3 m^3$ gas burned | 55.4 |
| ($lb/10^3 ft^3$ gas burned) | (3.4) |
| Gas Turbines | |
| $kg/10^3 m^3$ gas burned | 4.7 |
| ($lb/10^3$ | (0.3) |
| BLOWDOWN SYSTEMS | |
| Uncontrolled | |
| $kg/10^3$ liters refinery feed | Negligible |
| ($lb/10^3$ bbl refinery feed) | (Negligible) |
| Vapor Recovery System and Flaring | |
| $kg/10^3$ liters refinery feed | 0.054 |
| ($lb/10^3$ bbl refinery feed) | (18.9) |
| VACUUM DISTILLATION AND COLUMN CONDENSERS | |
| Uncontrolled | |
| $kg/10^3$ liters vacuum feed | Negligible |
| ($lb/10^3$ bbl vacuum feed) | (Negligible) |
| Controlled | Negligible |
| FLARES | 0.054 $kg/10^3$ liters (0.01916 lb/bbl)[e] |
| PROCESS HEATERS | |
| Oil | 6.57 $kg/10^3$ liters (2.30 lb/bbl)[e] |
| Gas | 2.2 $kg/m^3$ (0.14 $lb/ft^3$)[e] |

[a] $NO_x$ emission factor data for fluid coking units were not available.

[b] Total nitrogen oxides expressed as $NO_2$.

[c] ESP = electrostatic precipitator, CO = carbon monoxide.

[d] May be higher due to the combustion of ammonia.

[e] Total nitrogen oxides and not $NO_2$.

clay pipe, and other related items. Typically, a kiln is operated in conjunction with a drier which recovers part of the heat contained in the exhaust gases. Kilns are fueled by coal, oil, or gas (depending on the availability of fuel and the product being cured) for batch runs of 50 to 100 hours at temperatures around 1090°C (2000°F). Combustion products are ducted from the kiln to a drier, where wet clay products undergo an initial drying process. Occasionally, when higher temperatures are needed for drying, a secondary combustion process is used in the drier itself. $NO_x$ emission factors for brick manufacturing were obtained from Reference 2-5 and are presented in Table 2-24.

#### 2.3.2.6 Noncombustion and Other Minor Industrial Sources

Noncombustion-based $NO_x$ emissions from the chemical industry dominate this category. Oxides of nitrogen are chemically released during the production of nitric acid, adipic acid, terephthalic acid, acrylonitrile, adiponitrile, and explosives. Tables 2-25 to 2-27 present $NO_x$ emission factors for nitric acid, adipic acid, and explosives manufacturing, respectively. Uncontrolled $NO_x$ emissions from a terephthalic acid reactor are 6.5 kg/Mg (13 lb/ton) of acid produced (Reference 2-5). Uncontrolled $NO_x$ emissions from acrylonitrile and adiponitrile production are 4.9 kg/Mg (9.8 lb/ton) and 70.6 kg/Mg (140 lb/ton), respectively (Reference 2-4).

Other industrial processes such as primary copper smelting, coffee roasting, lime production, nitrate fertilizer production, and ammonia production also generate oxides of nitrogen in lesser amounts. $NO_x$ emission factors for these minor industrial sources are presented in Table 2-28 (References 2-5 to 2-10). Nationwide 1980 $NO_x$ emissions estimates for some of the minor categories including ammonia, explosives, organic chemicals, and pulp mills are presented in Table 2-16.

### 2.3.3 Solid Waste Disposal Sources

This category of $NO_x$ emissions includes such sources as refuse and sewage sludge incinerators, auto body incinerators, conical burners, and open burning. The 1980 nationwide $NO_x$ emissions from solid waste disposal are presented in Table 2-1. Each of the solid waste disposal $NO_x$ sources are briefly described in the following paragraphs. $NO_x$ emission factors are presented for each category of incineration.

The most common type of refuse incinerator consists of a refractory-lined chamber with a grate upon which refuse is burned. Combustion products are formed by heating and burning of refuse on the grate. Specific operating conditions, refuse composition, and basic incineration design have

TABLE 2-24. NITROGEN OXIDE EMISSION FACTORS FOR BRICK MANUFACTURING WITHOUT CONTROL EQUIPMENT, (Reference 2-5)

| PROCESS SOURCE | $NO_x$ EMISSION FACTOR | |
|---|---|---|
| | kg/Mg of brick produced | (lb/ton of brick produced) |
| CURING AND FIRING | | |
| Tunnel Kilns | | |
| Gas-fired | 0.08 | (0.15) |
| Oil-fired | 0.55 | (1.1) |
| Coal-fired | 0.45 | (0.9) |
| Periodic Kilns | | |
| Gas-fired | 0.21 | (0.42) |
| Oil-fired | 0.85 | (1.7) |
| Coal-fired | 0.70 | (1.4) |

TABLE 2-25. NITROGEN OXIDE EMISSION FACTORS FOR NITRIC ACID PRODUCTION[a], (Reference 2-9)

| SOURCE | $NO_x$ EMISSION FACTOR | |
|---|---|---|
| | kg/Mg acid produced | (lb/ton acid produced) |
| WEAK ACID PLANT TAIL GAS | | |
| Uncontrolled | 7-43, avg. 22 | (14-86, avg. 43) |
| Catalytic Reduction | | |
| Natural gas | 0.03-0.6, avg. 0.2 | (0.05-1.2, avg. 0.4) |
| Hydrogen[b] | 0-0.8, avg. 0.4 | (0-1.5, avg. 0.8) |
| Natural gas/hydrogen (25%/75%)[c] | 0.4-0.6, avg. 0.5 | (0.8-1.1, avg. 1.0) |
| Extended Absorption | 0.4-1.4, avg. 0.9 | (0.8-2.7, avg. 1.8) |
| HIGH STRENGTH ACID PLANT[d] | 5 | (10) |

[a] Based on 100% acid. Production rates are in terms of total weight of product (water and acid). A plant producing 454 Mg (500 tons)/day of 55 wt. % nitric acid is calculated as producing 250 Mg (275 tons)/day of 100% acid.

[b] Based on data from two plants with these process conditions: production rate, 118 Mg (130 tons)/day at 100% rated capacity; absorber exit temperature, 32°C (90°F); absorber exit pressure, 600 kPa (87 psig); acid strength, 57%.

[c] Based on data from two plants with these process conditions: production rate, 188 Mg (208 tons)/day at 100% rated capacity; abosrber exit temperature, 32°C (90°F); absorber exit pressure, 550 kPa (80 psig); acid strength, 57%.

[d] Based on a unit that produces 6615 kg/hr (3000 lb/hr) at 100% rated capacity, of 98% nitric acid.

TABLE 2-26. NITROGEN OXIDE EMISSION FACTORS FOR ADIPIC ACID MANUFACTURE, (Reference 2-5)

| PROCESS SOURCE | $NO_x$ EMISSION FACTORS[a] | |
|---|---|---|
| | kg/Mg of acid produced | (lb/ton of acid produced) |
| RAW MATERIAL STORAGE | | |
| Uncontrolled | 0 | (0) |
| CYCLOHEXANE OXIDATION | | |
| Uncontrolled[b] | 0 | (0) |
| w/boiler | 0 | (0) |
| w/thermal incinerator | 0 | (0) |
| w/flaring | 0 | (0) |
| w/carbon adsorber | 0 | (0) |
| w/scrubber plus boiler | 0 | (0) |
| NITRIC ACID REACTION | | |
| Uncontrolled[c] | 27 | (53) |
| w/scrubber[d] | 8 | (16) |
| w/thermal reduction[e] | 0.5 | (1) |
| w/flaring or combustion[d] | 8 | (16) |
| ADIPIC ACID REFINING | | |
| Uncontrolled | 0.3 | (0.6) |
| ADIPIC ACID DRYING, LOADING, AND STORAGE | | |
| Uncontrolled | 0 | (0) |

[a] $NO_x$ is in the form of NO and $NO_2$. Although large quantities of $N_2O$ are also produced, $N_2O$ is not considered a criteria pollutant and is not, therefore, included in these factors.

[b] Uncontrolled emission factors are after scrubber processing since hydrocarbon recovery using scrubbers is an integral part of adipic acid manufacturing.

[c] Uncontrolled emission factors are after $NO_x$ absorber since nitric acid recovery is an integral part of adipic acid manufacturing.

[d] Based on estimated 70% control.

[e] Based on estimated 97.5% control.

TABLE 2-27. NITROGEN OXIDE EMISSION FACTORS FOR EXPLOSIVE MANUFACTURING, (Reference 2-5)

| PROCESS SOURCE | $NO_x$ EMISSION FACTORS | |
|---|---|---|
| | kg/Mg produced | (lb/ton produced) |
| TNT - BATCH PROCESS | | |
| Nitration Reactors | | |
| Fume recovery | 3-19, avg. 12.5 | (6-38, avg. 25) |
| Acid recovery | 0.5-68, avg. 27.5 | (1-136, avg. 55) |
| Nitric Acid Concentrators | 8-36, avg. 18.5 | (16-72, avg. 37) |
| Sulfuric Acid Concentrators | | |
| ESP exit | 1-40, avg. 20 | (2-80, avg. 40) |
| ESP w/scrubber[a] | 1-40, avg. 20 | (2-80, avg. 40) |
| Red Water Incinerator | | |
| Uncontrolled[b] | 0.75-50, avg. 13 | (1.5-101, avg. 26) |
| Wet scrubber[c] | 2.5 | (5.0) |
| TNT - CONTINUOUS PROCESS | | |
| Nitration Reactors | | |
| Fume recovery | 3.35-5.0, avg. 4 | (6.7-10, avg. 8) |
| Acid recovery | 0.5-2.25, avg. 1.5 | (1-4.5, avg. 3) |
| Red Water Incinerator | 3-4.2, avg. 3.5 | (6.1-8.4, avg. 7) |
| NITROCELLULOSE | | |
| Nitration Reactors[d] | 1.85-17, avg. 7 | (3.7-34, avg. 14) |
| Nitric Acid Concentrator | 5-9, avg. 7 | (10-18, avg. 14) |
| Boiling Tubs | 1 | (2) |

[a] No data available for $NO_x$ emissions after the scrubber. It is assumed that NO emissions are unaffected by the scrubber.

[b] Use low end of range for modern, efficient units and high end for older, less efficient units.

[c] Apparent reductions in $NO_x$ after control may not be significant because these values are based on only one test result.

[d] For product with low nitrogen content (12 percent), use high end of range. For products with higher nitrogen content, use lower end of range.

TABLE 2-28. NITROGEN OXIDE EMISSION FACTORS FOR MISCELLANEOUS INDUSTRIAL PROCESSES, (References 2-5 to 2-10)

| INDUSTRY | SOURCE | $NO_x$ EMISSION FACTOR[a] |
|---|---|---|
| AMMONIA PRODUCTION | Primary Reformer | |
| | Natural gas | 2.9 kg/Mg (5.8 lb/ton) of ammonia produced |
| | Fuel oil | 2.7 kg/Mg (5.4 lb/ton) of ammonia produced |
| CARBON BLACK PRODUCTION | Oil Furnace Process | |
| | Main process vent | 0.28 kg/Mg (0.56 lb/ton) of carbon black produced[b] |
| | Flare | Not Available |
| | CO boiler & incinerator | 4.65 kg/Mg (9.3 lb/ton) of carbon black produced |
| | Dryer vent | |
| | bag filter | 0.12-0.61 kg/Mg, avg. 0.36 (0.24-1.22 lb/ton, avg. 0.73) |
| | scrubber | 1.1 kg/Mg (2.2 lb/ton) of carbon black produced |
| | Solid waste incinerator | 0.04 kg/Mg (0.08 lb/ton) of carbon black produced |
| | Thermal Process | Unknown[c] |
| COFFEE ROASTING | Roaster | |
| | Direct-fired | 0.05 kg/Mg (0.10 lb/ton) of coffee produced |
| | Indirect-fired | 0.05 kg/Mg (0.10 lb/ton) of coffee produced |
| GRANULAR NITRATE FERTILIZER MFG. | Grandulator | 0.45 kg/Mg (0.9 lb/ton) of fertilizer produced |
| | Dryers & Coolers | 1.5 kg/Mg (3.0 lb/ton) of fertilizer produced |

TABLE 2-28. NITROGEN OXIDE EMISSION FACTORS FOR MISCELLANEOUS INDUSTRIAL PROCESSES (CONTINUED)

| | | |
|---|---|---|
| ORCHARD HEATERS | Type of Heater | |
| | Pipeline | Negligible[d] |
| | Lazy flame | Negligible |
| | Return stack | Negligible |
| | Cone | Negligible |
| | Solid fuel | Negligible |
| ASPHALTIC CONCRETE PRODUCTION | Rotary Drum | 18 g/Mg (0.036 lb/ton) of concrete produced[e,f] |
| PRIMARY COPPER SMELTING[e] | Reverb Furnace Followed by Converters | |
| | Reverb furnace | 0.045 kg/Mg (0.09 lb/ton) of ore concentrate processed |
| | Converters | 0.025 kg/Mg (0.05 lb/ton) of ore concentrate processed |
| LIME PRODUCTION[g] | Crushers, Screens, Conveyors, Storage Piles | Negligible |
| | Rotary Kilns | 1.5 kg/Mg (3 lb/ton) of lime produced |
| | Vertical Kilns | Data Not Available |
| | Calcimatic Kilns[h] | 0.1 kg/Mg (0.2 lb/ton) of lime produced |
| | Fluidized-Bed Kilns | Data Not Available |
| | Product Coolers | Negligible |
| | Hydrators | Negligible |
| GAS SWEETENING PLANTS[i] | Amine | Negligible |
| PULP MILLS | Kraft Pulp Process | 0.90 kg/Mg (1.79 lb/ton) of pulp produced |

FOOTNOTES FOR TABLE 2-28.

---

[a] All emission factors are for uncontrolled emissions unless otherwise specified.

[b] Average values are based on the results of six sampling runs conducted at a representative plant with the industry mean production rate of $5.1 \times 10^4$ Mg ($5.6 \times 10^4$ tons)/yr.

[c] Emissions data are not available, but all emissions are believed to be negligible.

[d] Little nitrogen oxide is formed because of the relatively low combustion temperatures.

[e] Total nitrogen oxides expressed as $NO_2$ .

[f] Based on limited test data from a single asphaltic concrete plant.

[g] All emission factors for kilns and coolers are per unit of lime produced. Divide by two to obtain factors per unit of limestone feed to the kiln. Factors for hydrators are per unit of hydrated lime produced. Multiply by 1.25 to obtain factors per unit of lime feed to the hydrator.

[h] Calcimatic kilns generally employ stone preheaters. All factors represent emissions after the kiln exhaust passes through a preheater.

[i] Emission factors are presented only for smokeless flares and tail gas incinerators on the amine gas sweetening process. These factors represent emissions after smokeless flares (with fuel gas and steam injection) or tail gas incinerators.

a pronounced effect on emissions. Nitrogen oxide emissions increase with an increase in the temperature of the combustion zone, an increase in the residence time in the combustion zone before quenching, and an increase in the excess air rates to the point where dilution cooling overcomes the effect of increased oxygen concentration (References 2-5 to 2-6). Refuse incinerators have been labeled as municipal, industrial/commercial, trench, domestic, flue-fed, pathological, and controlled-air depending on the specific use sector or use function. $NO_x$ emission factors for refuse incinerators are given in Table 2-29 (References 2-5 to 2-6).

Incineration is being used to dispose of sewage sludge because it destroys the organic matter present in sludge, leaving only an odorless, sterile ash, and also reduces the solid mass by about 90 percent. The most prevalent types of sewage sludge incinerators are multiple hearth and fluidized bed units. In multiple hearth units the sludge enters the top of the furnace where it is first dried by contact with the hot, rising, combustion gases, and then burned as it moves slowly down through the lower hearths. At the bottom hearth any residual ash is then removed. In fluidized bed reactors, the combustion takes place in a hot, suspended bed of sand with much of the ash residue being swept out with the flue gas. Temperatures in a multiple hearth furnace are 320°C (600°F) in the lower, ash cooling hearth; 760 to 1100°C (1400 to 2000°F) in the central combustion hearths, and 540 to 650°C (1000 to 1200°F) in the upper, drying hearths. Temperatures in a fluidized bed reactor are fairly uniform, from 680 to 820°C (1250 to 1500°F). In both types of furnace an auxiliary fuel may be required either during startup or when the moisture content of the sludge is too high to support combustion.

$NO_x$ emission factors for sewage sludge incinerators were obtained from Reference 2-5 and are presented in Table 2-30.

Auto incinerators consist of a single primary combustion chamber in which one or several partially stripped cars are burned. Approximately 30 to 40 minutes is required to burn two bodies simultaneously. As many as 50 cars per day can be burned in this batch-type operation, depending on the capacity of the incinerator. Continuous operations in which cars are placed on a conveyor belt and passed through a tunnel-type incinerator have capacities of more than 50 cars per 8-hour day. Both the degree of combustion as determined by the incinerator design and the amount of combustible material left on the car greatly affect emissions. Temperatures on the order of 650°C (1200°F) are reached during auto body incineration. Some auto incinerators are designed for two stage combustion, using afterburner control devices. Afterburners result in a reduction of both $NO_x$ emissions and the emissions of the other criteria pollutants.

TABLE 2-29. NITROGEN OXIDE EMISSION FACTORS FOR REFUSE INCINERATORS WITHOUT CONTROL EQUIPMENT, (References 2-5, 2-6)

| INCINERATOR TYPE | $NO_x$ EMISSION FACTORS[a] | |
|---|---|---|
| | kg/Mg of refuse burned | (lb/ton of refuse burned) |
| MUNICIPAL | | |
| Multiple Chamber | 1.5 | (3) |
| INDUSTRIAL/COMMERCIAL | | |
| Multiple Chamber | 1.5 | (3) |
| Single Chamber | 1 | (2) |
| Trench | | |
| Wood | 2 | (4) |
| Rubber tires | Data not available | |
| Municipal refuse | Data not available | |
| Controlled-air | 5 | (10) |
| FLUE-FED SINGLE CHAMBER | 1.5 | (3) |
| FLUE-FED (MODIFIED)[b] | 5 | (10) |
| DOMESTIC SINGLE CHAMBER | | |
| w/o Primary Burner | 0.5 | (1) |
| w/Primary Burner | 1 | (2) |
| PATHOLOGICAL | 1.5 | (3) |

[a] Total nitrogen oxides expressed as $NO_2$.

[b] With afterburners and draft controls.

TABLE 2-30. NITROGEN OXIDE EMISSION FACTORS FOR SEWAGE SLUDGE INCINERATORS, (Reference 2-5)

| CONTROL STATUS | $NO_x$ EMISSION FACTORS[a,b] | |
|---|---|---|
| | kg/Mg | (lb/ton) |
| Uncontrolled | 3 | (6) |
| After Scrubber Control | 2.5 | (5) |

[a] Unit weights in terms of dried sludge.

[b] Total nitrogen oxides expressed as $NO_2$.

TABLE 2-31. NITROGEN OXIDE EMISSION FACTOR FOR AUTO BODY INCINERATORS, (Reference 2-5)

| CONTROL STATUS | $NO_x$ EMISSION FACTORS[a,b] | |
|---|---|---|
| | kg/car | (lb/car) |
| Uncontrolled | 0.05 | (0.1) |
| With Afterburner | 0.01 | (0.02) |

[a] Based on 113 kg (250 lb) of combustible material on stripped car body.

[b] Total nitrogen oxides expressed as $NO_2$.

$NO_x$ emission factors for auto body incinerators are presented in Table 2-31 (Reference 2-5).

Conical burners are generally a truncated metal cone with a screened top vent. The charge is placed on a raised grate by either conveyor or bulldozer; however, the use of a conveyor results in more efficient burning. No supplemental fuel is used, but combustion air is often supplemented by underfire air blown into the chamber below the grate and by overfire air introduced through peripheral openings in the shell. The quantities and types of pollutants released from conical burners are dependent on the composition and moisture content of the charged material, control of combustion air, type of charging system used, and the condition in which the incinerator is maintained. The most critical of these factors seems to be the level of maintenance on the incinerators. It is not uncommon for conical burners to have missing doors and numerous holes in the shell, resulting in excessive combustion air, low temperatures, and therefore, high emission rates of combustible pollutants. $NO_x$ emission factors for conical burners handling municipal and wood refuse are presented in Table 2-32 (Reference 2-5).

Open burning can be done in open drums or baskets, in fields and yards, and in large open dumps or pits. Materials commonly disposed of in this manner are municipal waste, auto body components, landscape refuse, agricultural field refuse, wood refuse, bulky industrial refuse, and leaves. Ground-level open burning is affected by many variables including wind, ambient temperature, composition and moisture content of the refuse burned, and compactness of the pile. In general, the relatively low temperatures associated with open burning suppress the emission of nitrogen oxides. Estimates of nationwide $NO_x$ emissions from open burning are given in Table 2-1. $NO_x$ emission factors for the open burning of nonagricultural materials are presented in Table 2-33 (Reference 2-6).

### 2.3.4 Other Miscellaneous $NO_x$ Sources

Forest fires, structural fires, and explosives detonation are some of the $NO_x$ sources included in this category. Nationwide $NO_x$ emissions estimates for miscellaneous sources such as these are given in Table 2-1. Available $NO_x$ emission factors for forest fires and explosives detonation are presented in Tables 2-34 and 2-35 (References 2-5 and 2-8).

TABLE 2-32. NITROGEN OXIDE EMISSION FACTORS FOR WASTE INCINERATION IN CONICAL BURNERS WITHOUT CONTROL EQUIPMENT, (Reference 2-5)

| TYPE OF WASTE | $NO_x$ EMISSION FACTORS | |
|---|---|---|
| | kg/Mg of refuse burned | (lb/ton of refuse burned) |
| Municipal Refuse | 2.5 | (5) |
| Wood Refuse[a] | 0.5 | (1) |

[a] Moisture content as fired is approximately 50 percent for wood waste.

TABLE 2-33. NITROGEN OXIDE EMISSION FACTORS FOR OPEN BURNING OF NONAGRICULTURAL MATERIALS, (Reference 2-6)

| TYPE OF WASTE | $NO_x$ EMISSION FACTORS | |
|---|---|---|
| | kg/Mg of refuse burned | (lb/ton of refuse burned) |
| Municipal Refuse | 3 | (6) |
| Automobile Components[a] | 2 | (4) |

[a] Upholstery, belts, hoses, and tires burned in common.

TABLE 2-34. NITROGEN OXIDE EMISSION FACTORS FOR FOREST WILDFIRES[a], (Reference 2-5)

| GEOGRAPHIC AREA[b] | $NO_x$ EMISSION FACTORS | |
|---|---|---|
| | kg/hectare of forest burned | (lb/acre of forest burned) |
| Rocky Mountain Group | 166 | (148) |
| Northern - Region 1 | 269 | (239) |
| Rocky Mountain - Region 2 | 135 | (120) |
| Southwestern - Region 3 | 45 | (40) |
| Intermountain - Region 4 | 36 | (32) |
| Pacific Group | 85 | (76) |
| California - Region 5 | 81 | (72) |
| Pacific Northwest - Region 6 | 269 | (239) |
| Alaska - Region 10 | 72 | (64) |
| Southern Group | 40 | (35.6) |
| Southern - Region 8 | 40 | (35.6) |
| North Central Group | 49 | (43.6) |
| Eastern - Region 9 | 49 | (43.6) |
| Eastern Group (with Region 9) | 49 | (43.6) |
| TOTAL United States | 76 | (67.6) |

[a] Areas consumed by fire and $NO_x$ emissions are for 1971.

[b] Geographic areas are specifically defined in Reference 2-5.

TABLE 2-35. NITROGEN OXIDE EMISSION FACTORS FOR THE DETONATION OF EXPLOSIVES, (Reference 2-8)

| EXPLOSIVE[a] | COMPOSITION | $NO_x$ EMISSION FACTOR | |
|---|---|---|---|
| | | kg/Mg | (lb/ton) |
| Dynamite, Gelatin | 20-100% nitroglycerine | 4-59, avg. 26 | (8-119, avg. 53) |
| ANFO | ammonium nitrate with 5.8-8% fuel oil | 8 | (17) |

[a] Emission factors for black powder, smokeless powder, dynamite-straight, dynamite-ammonia, TNT, RDX, and PETN were not available.

## 2.4 REFERENCES FOR SECTION 2


2-1 Chamot, E.M., D.S. Pratt, and H.W. Redfield. "Journal of the American Chemical Society," 33, 366, 1911.

2-2 Code of Federal Regulations, Title 40, Part 60, Appendix A, Method 7. See Also: Hamil, H. and R. Thomas. "Collaborative Study of Method for the Determination of Nitrogen Oxide Emissions from Stationary Sources," SwRI-EPA Contract 68-02-0626. May 1974.

2-3 Federal Register, Volume 41, No. 232. December 1, 1976.

2-4 Unpublished Data of the Monitoring and Data Analysis Division of the Office of Air Quality Planning and Standards, U.S. Environmental Protection Agency. Research Triangle Park, North Carolina. July 1982.

2-5 "Compilation of Air Pollution Emission Factors (Third Edition)," Publication No. AP-42. U.S. Environmental Protection Agency, Research Triangle Park, North Carolina. August 1977.

2-6 Supplement No. 8 of Reference 2-5, May 1978.

2-7 Supplement No. 9 of Reference 2-5, July 1979.

2-8 Supplement No. 10 of Reference 2-5, February 1980.

2-9 Supplement No. 11 of Reference 2-5, October 1980.

2-10 Supplement No. 12 of Reference 2-5, April 1981.

2-11 Draft Supplement No. 13 of Reference 2-5, August 1982.

2-12 Personal communication with H.J. Melosh III, Foster Wheeler Corporation.

2-13 Surprenant, N.F. et. al. "Preliminary Emissions Assessment of Conventional Stationary Combustion Systems," GCA Corporation, EPA Report No. 600/2-76-046b. March 1976.

2-14 Devitte, T., et. al., "The Population and Characteristics of Industrial/Commercial Boilers," EPA-600/7-79-178a, August 1979.

2-15 Cato, G.A., H.J. Buening, C.C. DeVivo, B.C. Morton, and J.M. Robinson. "Field Testing: Application of Combustion Modification to Control Pollutant Emissions from Industrial Boilers - Phase 1," KVB Engineering Inc., EPA-650/2-74-078a, Research Triangle Park, North Carolina. October 1974.

2-16 Foley, G. "Industrial Growth Forecasts," Stanford Research Institute, Contract No. 68-02-1320. September 1974.

# SECTION 3

# CONTROL TECHNIQUES

This section presents a survey of the general principles and developmental status of potential techniques for $NO_x$ control for stationary sources. It is intended to provide a broad perspective on the various suggested concepts for $NO_x$ control by combustion process modification and flue gas treatment for combustion sources and by tail gas cleanup for noncombustion sources. A more detailed review of the status of development, effectiveness, and cost of control implementation on specific equipment types is given in Sections 4, 5, and 6.

## 3.1 COMBUSTION MODIFICATIONS

Modifying the combustion process is the most widely used technique for reducing combustion generated oxides of nitrogen. This section describes the four most popular methods: modification of the operating conditions, equipment design modification, fuel modification, and use of alternate combustion processes. The section begins by describing general concepts on $NO_x$ formation and control during combustion. Much of the material in Section 3.1 was taken directly from Reference 3-1 and the reader is referred back to this document for further discussion of combustion modifications, especially as applied to utility boilers.

### 3.1.1 General Concepts on $NO_x$ Formation and Control

Oxides of nitrogen formed in combustion processes are due either to the thermal fixation of atmospheric nitrogen in the combustion air, which produces "thermal $NO_x$," or to the conversion of chemically bound nitrogen in the fuel, which produces "fuel $NO_x$." For natural gas and light distillate oil firing, nearly all $NO_x$ emissions result from thermal fixation. With residual oil, crude oil, and coal, the contribution from fuel bound nitrogen can be significant and, in certain cases, predominant.

A third potential mechanism of $NO_x$ formation arises in processes such as glass manufacturing, where the raw materials in contact with the combustion products contain nitrogen compounds. Little is known about the extent of conversion to $NO_x$ of these nitrogen compounds, or of the effects of combustion modifications on this mechanism.

### 3.1.1.1 Thermal $NO_x$

During combustion, nitrogen oxides are formed by the high temperature, thermal fixation of $N_2$. Nitric oxide (NO) is the major product, even though $NO_2$ is thermodynamically favored at lower temperatures. The residence time in most stationary combustion processes is too short for significant NO to be oxidized to $NO_2$.

The detailed chemical mechanism for thermal $NO_x$ formation is not fully understood. However, it is widely accepted that thermal fixation in the postcombustion zone occurs according to the extended form of the Zeldovich chain mechanism (Reference 3-2):

$$N_2 + O \rightleftharpoons NO + N \qquad (3\text{-}1)$$

$$N + O_2 \rightleftharpoons NO + O \qquad (3\text{-}2)$$

$$N + OH \rightleftharpoons NO + H \qquad (3\text{-}3)$$

assuming that the combustion reactions have reached equilibrium. Reaction (3-1) has a large activation energy (317 kJ/mol) and is generally believed to be rate determining. Oxygen atom concentrations are assumed to have reached equilibrium according to:

$$O_2 + M \rightleftharpoons O + O + M \qquad (3\text{-}4)$$

where M denotes any third substance (usually $N_2$).

In the flame zone itself, the Zeldovich mechanism with the equilibrium oxygen assumption is not adequate to account for experimentally observed NO formation rates. Several investigators have observed the production of significant amounts of "prompt" NO, which is formed very rapidly in the flame front (References 3-3 through 3-11), but there is not general agreement on how it is produced. Prompt NO is believed to stem from the existence of "superequilibrium" radical concentrations (References 3-11, 3-12, and 3-13) within the flame zone which result from hydrocarbon chemistry and/or nitrogen specie reactions, such as suggested by Fenimore (Reference 3-14). To date, prompt NO has only been explicitly measured in carefully controlled laminar flames, but the mechanism almost certainly exists in typical combustion flames as well. Of course, in an actual combustor, both the hydrocarbon and $NO_x$ kinetics are directly coupled to turbulent mixing in the flame zone.

Recent experiments at atmospheric pressure indicate that under certain conditions the amount of NO formed in heated $N_2$, $O_2$, and Ar mixtures can be expressed as (Reference 3-15):

$$[NO] = k_1 \exp(-k_2/T)[N_2][O_2]^{\frac{1}{2}}t \qquad (3\text{-}5)$$

where [ ] = mole fraction

$k_1$, $k_2$ = constants

T = temperature

t = time

Although this expression certainly will not adequately describe NO formation in a turbulent flame, it does point out several features of thermal $NO_x$ formation. It reflects the strong dependence of NO formation on temperature. It also shows that NO formation is directly proportional to $N_2$ concentration and to residence time, and proportional to the square root of oxygen concentration.

Based on the above relations, thermal $NO_x$ can theoretically be reduced using four tactics:

1) Reduce local nitrogen concentrations at peak temperature;
2) Reduce local oxygen concentrations at peak temperature;
3) Reduce the residence time at peak temperature; and
4) Reduce peak temperature.

Since reducing $N_2$ levels is quite difficult, efforts in the field have focused on reducing oxygen levels, peak temperatures, and time of exposure in the $NO_x$ producing regions of the combustion chamber.

On a macroscopic scale, techniques such as lowered excess air and off stoichiometric (or staged) combustion have been used to lower local $O_2$ concentrations in boilers. Also, staged combustion in the form of stratified charge cylinder design has been used successfully in IC engines. Since gas turbines typically operate at excess air levels far greater than stoichiometric, lowering excess air levels in this equipment class does not control thermal $NO_x$.

Flue gas recirculation and reduced air preheat have been used in boilers to control thermal $NO_x$ by lowering peak flame temperatures. Flue gas recirculation also reduces combustion gas residence time, but its primary effect as a thermal $NO_x$ control is through temperature reduction. Analogously, exhaust gas recirculation (EGR), reduced manifold air temperature (IC engines) and reduced air preheat (regenerative gas turbines) have been applied to IC engines and gas turbines. Other techniques designed to lower peak temperatures in prime movers include water injection and altered air/fuel ratios. Techniques for prime movers which specifically reduce exposure time at

high temperatures include ignition retard for IC engines and early quench with secondary air for gas turbines.

It is important to recognize that the above-mentioned techniques for thermal $NO_x$ reduction alter combustion conditions on a macroscopic scale. Although these macroscopic techniques have all been relatively successful in reducing thermal $NO_x$, local microscopic combustion conditions ultimately determine the amount of thermal $NO_x$ formed. These conditions are in turn intimately related to such variables as local combustion intensity, heat removal rates, and internal mixing effects. Modifying these secondary combustion variables at microscopic levels requires fundamental changes in combustion equipment design..

For example, recent studies on the formation of thermal $NO_x$ in gaseous flames have confirmed that internal mixing can have large effects on the total amount of NO formed (References 3-16, 3-17). Burner swirl, combustion air velocity, fuel injection angle and velocity, quarl angle, and confinement ratio all affect the mixing between fuel, combustion air, and recirculated products. Mixing, in turn, alters the local temperatures and specie concentrations which control the rate of $NO_x$ formation.

Unfortunately, generalizing these effects is difficult, because the interactions are complex. Increasing swirl, for example, may both increase entrainment of cooled combustion products (hence lowering peak temperatures) and increase fuel/air mixing (raising local combustion intensity). The net effect of increasing swirl can be to either raise or lower $NO_x$ emissions, depending on other system parameters.

In summary, a hierarchy of effects depicted in Table 3-1 produces local combustion conditions which promote thermal $NO_x$ formation. Although combustion modification technology seeks to affect the fundamental parameters of combustion, modifications must be made by changing the primary equipment and fuel parameters. Control of thermal $NO_x$, which began by altering inlet conditions and external mass addition, has moved to more fundamental changes in combustion equipment design.

#### 3.1.1.2 Fuel $NO_x$

The role of fuel bound nitrogen as a source of $NO_x$ emissions from combustion sources has been recognized since 1968 (Reference 3-18). Although the relative contribution of fuel and thermal $NO_x$ to total $NO_x$ emissions from sources firing nitrogen containing fuels has not been definitively established, recent estimates indicate that fuel $NO_x$ is significant and may even predominate. In

one laboratory study (Reference 3-19), residual oil and pulverized coal were burned in an argon/oxygen mixture to eliminate thermal $NO_x$ effects. Results show that fuel $NO_x$ can account for over 50 percent of total $NO_x$ production from residual oil firing and approximately 80 percent of total $NO_x$ from coal firing. Tests on a full scale system, a 560 MW coal-fired utility boiler, confirm this prediction (Reference 3-20). Flue gas recirculation, which controls primarily thermal $NO_x$, was a relatively ineffective $NO_x$ control measure for the coal-fired boiler tested.

TABLE 3-1. FACTORS CONTROLLING THE FORMATION OF THERMAL $NO_x$ (Reference 3-1)

| Primary Equipment and Fuel Parameters | Secondary Combustion Parameters | Fundamental Parameters | |
|---|---|---|---|
| Inlet temperature, velocity<br>Firebox design<br>Fuel composition<br>Injection pattern of fuel and air<br>Size of droplets or particles<br>Burner swirl<br>External mass addition | Combustion intensity<br>Heat removal rate<br>Mixing of combustion products into flame<br>Local fuel/air ratio<br>Turbulent distortion of flame zone | Oxygen level<br>Peak temperature<br>Exposure time at peak temperature | Thermal $NO_x$ |

Fuel bound nitrogen occurs in coal and petroleum fuels. However, the nitrogen containing compounds in petroleum tend to concentrate in the heavy resin and asphalt fractions upon distillation (Reference 3-21). Therefore, fuel $NO_x$ is of importance primarily in residual oil and coal firing. The nitrogen compounds found in petroleum include pyrroles, indoles, isoquinolines, acridines, and porphyrins. Although the structure of coal has not been defined with certainty, it is believed that coal-bound nitrogen also occurs in aromatic ring structures such as pyridine, picoline, quinoline, and nicotine (Reference 3-21).

The nitrogen content of most residual oils varies from 0.1 to 0.5 percent. Nitrogen content of most U.S. coals lies in the 0.5 to 2 percent range (Reference 3-22); anthracite coals contain the least and bituminous coals the most nitrogen. Figure 3-1 illustrates the nitrogen content of various U.S. coals, expressed as ng $NO_2$ produced per joule for 100 percent conversion of the fuel nitrogen (Reference 3-23). The figure clearly shows that if all coal bound nitrogen were converted

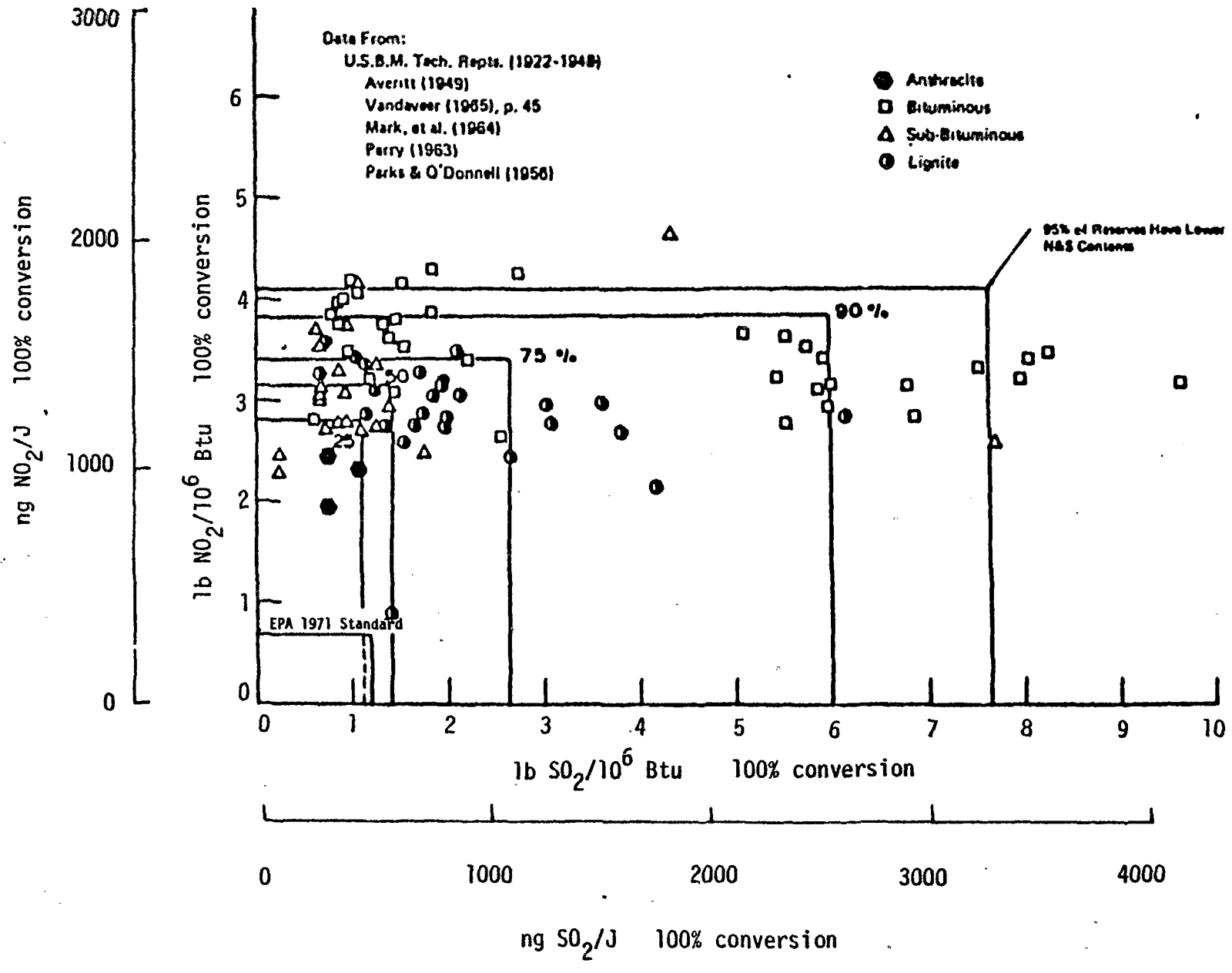


Figure 3-1. Nitrogen and sulfur content of U.S. coal reserves (Reference 3-23).

to $NO_x$, emissions for all coals would exceed even the 1971 Standards of Performance for Large Steam Generators (NSPS). Fortunately, only a fraction of the fuel nitrogen is converted to $NO_x$ for both oil and coal firing, as shown in Figure 3-2 (Reference 3-24). Furthermore, the figure indicates that fuel nitrogen conversion decreases as nitrogen content increases. Thus, although fuel $NO_x$ emissions undoubtedly increase with increasing fuel nitrogen content, the emissions increase is not proportional. In fact, recent data indicate only a small increase in $NO_x$ emissions as fuel nitrogen increases (Reference 3-25). From observations such as these, the effectiveness of partial fuel denitrification as a $NO_x$ control method seems doubtful.

Although the precise mechanism by which fuel nitrogen is converted to $NO_x$ is not understood, certain aspects are clear, particularly for coal combustion. In a large pulverized coal-fired utility boiler, the coal particles are conveyed by an airstream into the hot combustion chamber, where they are heated at a rate in excess of $10^4$°K/s. Almost immediately volatile species, containing some of the coal bound nitrogen, vaporize and burn homogeneously, rapidly (~300 ms).

Figure 3-3 summarizes what may happen to fuel nitrogen during this process (Reference 3-26). In general, nitrogen evolution parallels evolution of the total volatiles, except during the initial 10 to 15 percent volatilization in which little nitrogen is released (Reference 3-27). Both total mass volatilized and total nitrogen volatilized increase with higher pyrolysis temperature; the nitrogen volatilization increases more rapidly than that of the total mass. Total mass volatilized appears to be a stronger function of coal composition than total nitrogen volatilized (Reference 3-28). This supports the relatively small dependence of fuel $NO_x$ on coal composition observed in small scale testing (References 3-19 and 3-29).

Although there is not absolute agreement on how the volatiles separate into species, it appears that about half the total volatiles and 85 percent of the nitrogeneous species evolved react to form other reduced species before being oxidized. Prior to oxidation, the devolatilized nitrogen may be converted to a small number of common, reduced intermediates, such as HCN and $NH_3$, in the fuel-rich regions of the flames. The existence of a set of common reduced intermediates would explain the observations that the form of the original fuel nitrogen compound does not influence its conversion to NO (e.g., References 3-21, 3-30). More recent experiments suggest that HCN is the predominant reduced intermediate (Reference 3-31). The reduced intermediates are then either oxidized to NO, or converted to $N_2$ in the postcombustion zone. Although the mechanism for these conversions is not presently known, one proposed mechanism postulates a role for NCO (Reference 3-32).

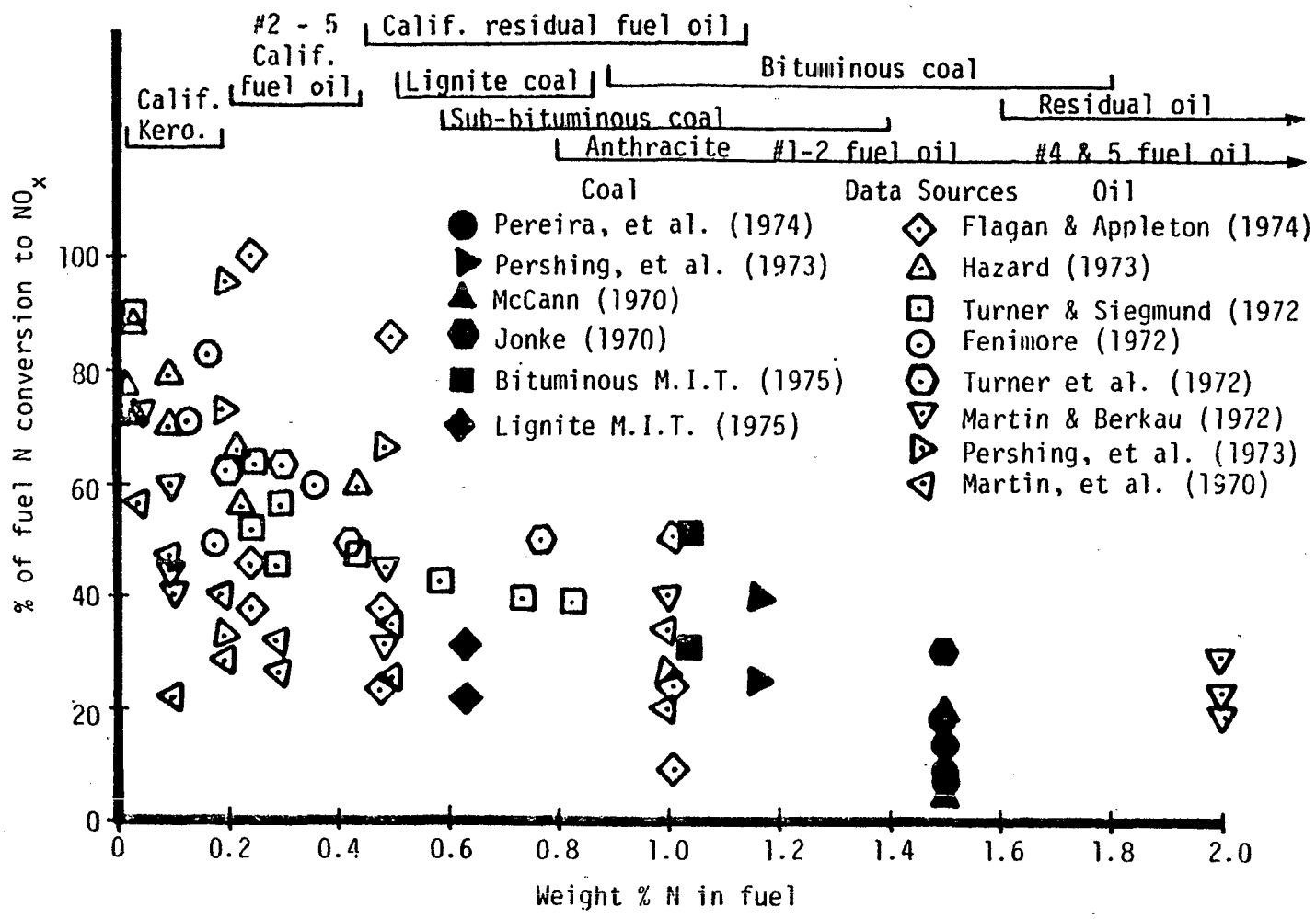


Figure 3-2. Conversion of fuel N in practical combustors (Reference 3-24).

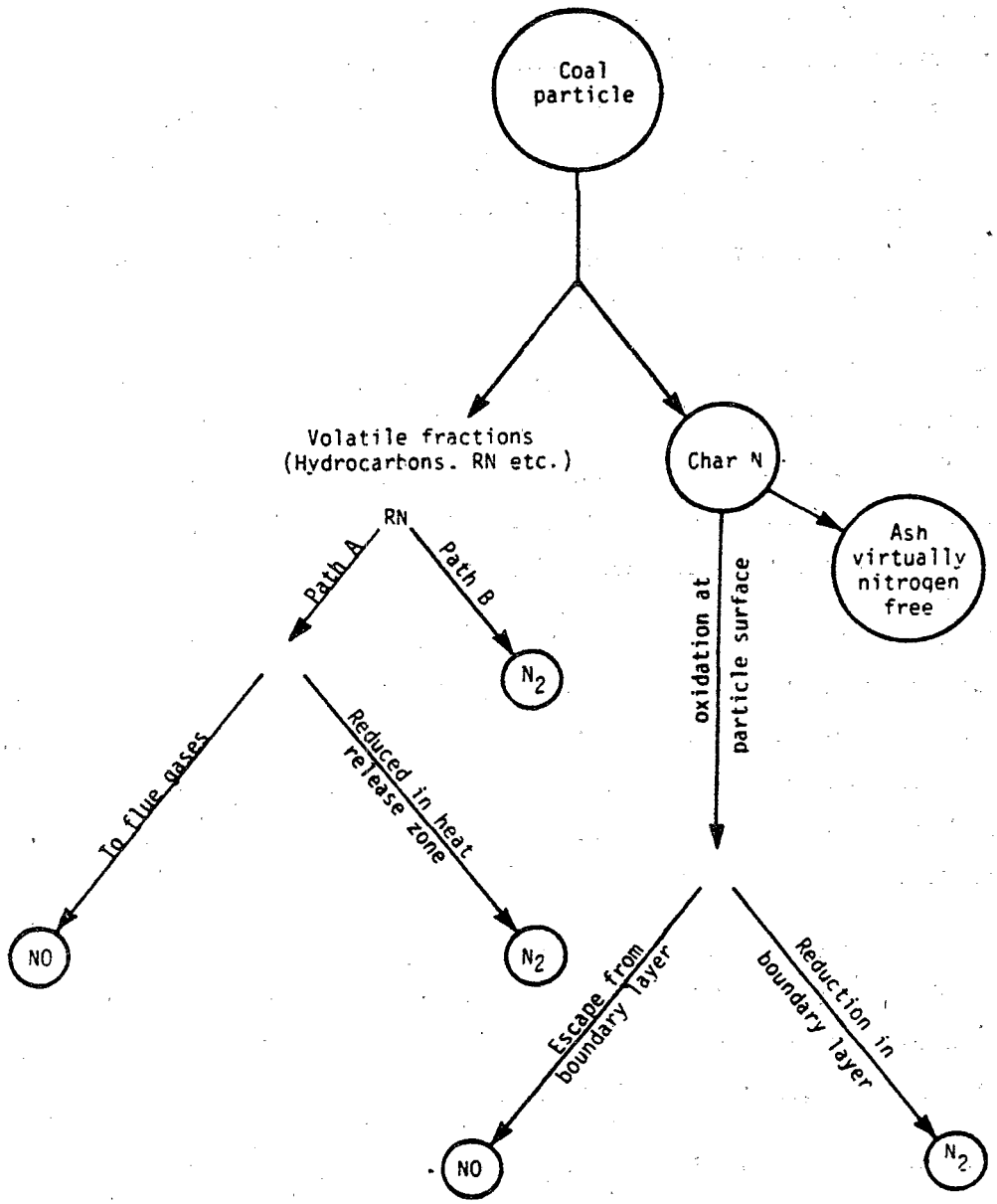


Figure 3-3. Possible fate of fuel nitrogen contained in coal particles during combustion (Reference 3-26).

Nitrogen retained in the char may also be oxidized to NO, or reduced to $N_2$ through heterogeneous reactions occurring in the postcombustion zone. However, it is clear that the conversion of char nitrogen to NO proceeds much more slowly than the conversion of devolatilized nitrogen. In fact, based on a combination of experimental and empirical modeling studies, it is now believed that 60 to 80 percent of the fuel $NO_x$ results from volatile nitrogen oxidation (References 3-27, 3-33). Conversion of the char nitrogen to NO is in general lower, by factors of two to three, than conversion of total coal nitrogen (Reference 3-30).

Regardless of the precise mechanism of fuel $NO_x$ formation, several general trends are evident, particularly for coal combustion. As expected, fuel nitrogen conversion to NO is highly dependent on the fuel/air ratio for the range existing in typical combustion equipment, as shown in Figure 3-4. Oxidation of the char nitrogen is relatively insensitive to fuel/air changes, but volatile NO formation is strongly affected by fuel/air ratio changes.

In contrast to thermal $NO_x$, fuel $NO_x$ production is relatively insensitive to small changes in combustion zone temperature (Reference 3-30). Char nitrogen oxidation appears to be a very weak function of temperature, and although the amount of nitrogen volatiles appears to increase as temperature increases, this is believed to be partially offset by a decrease in percentage conversion. Furthermore, operating restrictions severely limit the magnitude of actual temperature changes attainable in current systems.

As described above, fuel $NO_x$ emissions are a strong function of fuel/air mixing. In general, any change which increases the mixing between the fuel and air during coal devolatilization will dramatically increase volatile nitrogen conversion and increase fuel $NO_x$. In contrast, char NO formation is only weakly dependent on initial mixing.

From the above modifications, it appears that, in principle, the best strategy for fuel $NO_x$ abatement combines low excess air (LEA) firing, optimum burner design, and two stage combustion. Assuming suitable stage separation, low excess air may have little effect on fuel $NO_x$, but it increases system efficiency. Before using LEA firing, the need to get good carbon burnout and low CO emissions must be considered.

Optimum burner design for coal ensures locally fuel-rich conditions during devolatilization, which promotes reduction of devolatilized nitrogen to $N_2$. Two-stage combustion produces overall fuel-rich conditions during the first 1 to 2 seconds and promotes the reduction of NO to $N_2$ through reburning reactions. High secondary air preheat may also be desirable, because it promotes more

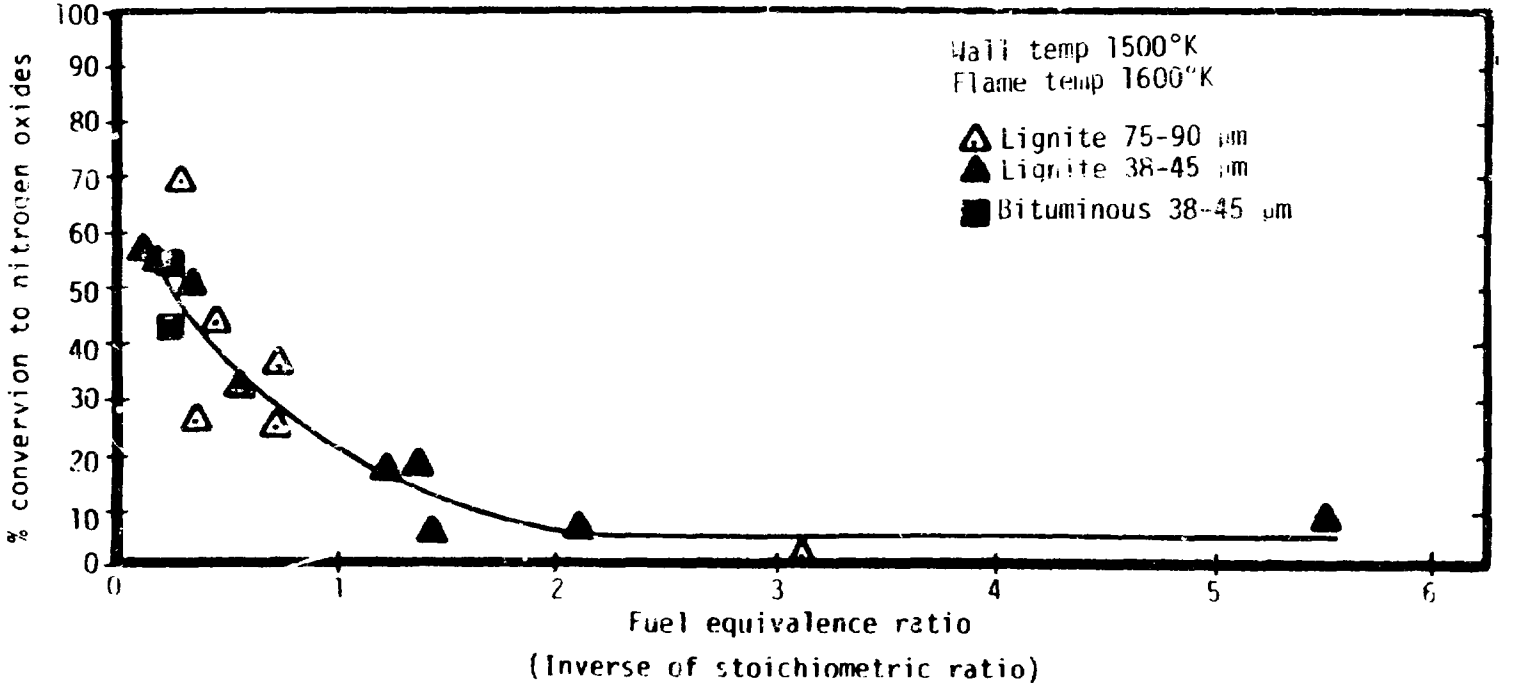


Figure 3-4. Conversion of nitrogen in coal to $NO_x$ (Reference 3-25).

complete nitrogen devolatilization in the fuel rich initial combustion stage. This leaves less char nitrogen to be subsequently oxidized in the fuel-lean second stage. Unfortunately, it also tends to favor thermal NO formation, and at present there is no general agreement on which effect dominates.

#### 3.1.1.3 Summary of Process Modification Concepts

In summary of the above discussion, both thermal and fuel $NO_x$ are kinetically or aerodynamically limited in that their emission rates are far below the levels which would prevail at equilibrium. Thus, the rate of formation of both thermal and fuel $NO_x$ is dominated by combustion conditions and is amenable to suppression through combustion process modifications. Although the mechanisms are different, both thermal and fuel $NO_x$ are promoted by rapid mixing of oxygen with the fuel. Additionally, thermal $NO_x$ is greatly increased by long residence time at high temperature. The modified combustion conditions and control concepts which have been tried or suggested to combat the formation mechanisms are as follows:

(1) Decrease primary flame zone $O_2$ level by
- -- Decreased overall $O_2$ level
- -- Controlled mixing of fuel and air
- -- Use of fuel-rich primary flame zone

(2) Decrease time of exposure at high temperature by
- -- Decreased peak temperature:
  - -- Decreased adiabatic flame temperature through dilution
  - -- Decreased combustion intensity
  - -- Increased flame cooling
  - -- Controlled mixing of fuel and air or use of fuel-rich primary flame zone
- -- Decreased primary flame zone residence time

Table 3-2 relates these control concepts to applicable combustion process modifications and equipment types. The process modifications are categorized according to their role in the control development sequence: operational adjustments, hardware modifications of existing equipment or through factory installed controls, and major redesigns of new equipment. The controls for decreased $O_2$ are also generally effective for peak temperature reduction but have not been repeated. The following subsections briefly review the status of each of the applicable control techniques.

TABLE 3-2. SUMMARY OF COMBUSTION PROCESS MODIFICATION CONCEPTS (Reference 3-1)

| Combustion Conditions | Control Concept | Applicable Equipment | Effect on Thermal $NO_x$ | Effect on Fuel $NO_x$ | Primary Applicable Controls | | |
|---|---|---|---|---|---|---|---|
| | | | | | Operational Adjustments | Hardware Modification | Major Redesign |
| Decrease primary flame zone $O_2$ level | Decrease overall $O_2$ level | Boilers, furnaces | Reduces $O_2$-rich, high-$NO_x$ pockets in the flame | Reduces exposure of fuel nitrogen intermediaries to $O_2$ | Low excess air firing | Flue gas recirculation (FGR) | |
| | Delayed mixing of fuel and air | Boiler, furnaces | Flame cooling and dilution during delayed mix reduces peak temp. | Volatile fuel N reduces to $N_2$ in the absence of oxygen | Burner adjustments | Low $NO_x$ burners | Optimum burner/ firebox design |
| | Increased fuel/ air mixing | Gas turbines | Reduces local hot stoichiometric regions in overall fuel lean combustion | Increases | | | New can design; premix, prevap. |
| | Primary fuel-rich flame zone | Boilers, furnaces, IC | Flame cooling in low-$O_2$, low-temp. primary zone reduces peak temp. | Volatile fuel N reduces to $N_2$ in the absence of oxygen | Burners out of service; biased burner firing | Overfire air ports, stratified charge | Burner/firebox design for two-stage combustion |
| Decrease peak flame temperature | Decrease adiabatic flame temperature | Boilers, furnaces, IC, gas turbines | Direct supression of thermal $NO_x$ mechanism | Ineffective | Reduced air preheat | Water injection, FGR | |
| | Decrease combustion intensity | Boilers, furnaces | Increased flame zone cooling yields lower peak temp. | Minor direct effect; indirect effect on mixing | Load reduction | | Enlarged firebox increased burner spacing |
| | Increased flame zone cooling/ reduce residence time | Boilers, furnaces | Increased flame zone cooling yields lower peak temp. | Ineffective | Burner tilt | | Redesign heat transfer surfaces, firebox aerodynamics |

### 3.1.2 Modification of Operating Conditions

The modification techniques described in this subsection include low excess air, off stoichiometric or staged combustion, flue gas recirculation, reduced air preheat, reduced firing rate, and steam or water injection.

#### 3.1.2.1 Low Excess Air Combustion (LEA)

Reducing the total amount of excess air supplied for combustion is an effective demonstrated method for reducing $NO_x$ emissions from utility and industrial boilers, residential and commercial furnaces, warm air furnaces, and process furnaces. Low excess air (LEA) firing reduces the local flame zone concentration of oxygen, thus reducing both thermal and fuel $NO_x$ formation. LEA firing is furthermore easy to implement and increases boiler efficiency. It is, therefore, used extensively in both new and retrofit applications, either singly or in combination with other control measures. The ultimate level of excess air is generally limited by the onset of smoke or carbon monoxide emissions which occurs when excess air is reduced to levels far below the design conditions. Fouling and slagging may also increase in heavy oil- or coal-fired applications at very low levels of excess air, thus limiting the potential of this technique.

Low excess air firing is usually the first $NO_x$ control technique applied to utility boilers. It may be used with virtually all fuels and firing methods. It was initially implemented to increase thermal efficiency and reduce stack gas opacity due to acid mist, and it is now often considered more of an energy conservation measure than a $NO_x$ control technique. A number of studies have shown LEA firing to be effective in reducing $NO_x$ emissions without significantly increasing CO or smoke levels (References 3-34 through 3-39). As shown in Section 4, Table 4-1, numerous tests of low excess air firing on utility boilers have indicated $NO_x$ emission reductions averaging between 16 and 21 percent for coal, oil, and natural gas firing compared to earlier baseline levels.

The minimum practical level of excess air which can be achieved in existing boilers and process heaters, without encountering operational problems, depends upon factors in addition to the type of fuel fired. These factors include low load operation, nonuniformity of air/fuel ratio, fuel and air control lags during load swings, use of upward burner tilt to increase steam superheat (for tangentially-fired boilers), and coal quality variation and ash slagging potential (for coal-fired boilers). They tend to increase the minimum excess air level at which the boiler can operate safely.

Other factors such as secondary air register settings and steam temperature control flexibility also affect the excess air levels. The boiler combustion control system must be modified so that the proportioning of fuel and air is adequate under all operating conditions. Uniform distribution of fuel and air to all burners is increasingly important as excess air is lowered. Excess air levels are also affected if other $NO_x$ control techniques are employed. Staging and operating at reduced load increases the minimum excess air levels.

As discussed in Section 4.2, LEA firing is also a very effective method for controlling $NO_x$ in industrial boilers. For residential and commercial furnaces, however, while LEA is a potentially feasible $NO_x$ control technique, the trend in $NO_x$ control for these sources has been in improved burner design in order to obtain low $NO_x$ levels without extensive CO emissions.

LEA is not a very promising technique for IC engines and gas turbines. When the air/fuel ratio is reduced, CO and HC emissions increase sharply for IC engines. In gas turbines, the overall air/fuel ratio cannot be modified to control $NO_x$, since the ratio is determined by the turbine inlet temperature.

In summary, changing the overall air/fuel ratio to control $NO_x$ emissions is a simple, feasible, and effective technique for utility and industrial boilers but is less applicable for other stationary sources of combustion. For certain applications such as utility boilers, LEA firing is presently considered a routine operating procedure and is incorporated in all new units. Also, more and more industrial boilers are incorporating this techniques as well. Since it is often efficient and easy to implement, LEA firing may see increasingly widespread use in other applications. Most sources will require additional control methods, in conjunction with LEA, to bring $NO_x$ emissions within statutory limits. In such cases, the extent to which excess air can be lowered will depend upon the other control techniques employed. However, virtually all developmental programs for advanced $NO_x$ controls are placing maximum emphasis on operation at minimum levels of excess air. LEA will thus be an integral part of nearly all combustion modification $NO_x$ controls, both current and emerging.

#### 3.1.2.2 Off-Stoichiometric or Staged Combustion (OSC)

Off stoichiometric or staged combustion seeks to control $NO_x$ by carrying out initial combustion in a primary, fuel-rich combustion zone, then completing combustion at lower temperatures in a second, fuel lean zone. In practice OSC is implemented through biased burner firing (BBF), burners out of service (BOOS), or overfire air injection (OFA).

Biased Burner Firing (BBF), Burners Out of Service (BOOS)

Biased burner firing consists of firing the lower rows of burners more fuel-rich than the upper rows of burners. This may be accomplished by maintaining normal air distribution to the burners while adjusting fuel flow so that a greater amount of fuel enters the furnace through the lower rows of burners than through the upper rows of burners. Additional air required for complete combustion enters through the upper rows of burners which are firing air rich.

In the burners out of service mode, individual burners, or rows of burners, admit air only. Correspondingly the total fuel demand is supplied through the remaining fuel admitting or active burners. Thus the active burners are firing more fuel-rich than normal, with the remaining air required for combustion being admitted through the inactive burners.

These methods reduce $NO_x$ emissions by reducing the excess air available in the firing zone. This reduces fuel and thermal $NO_x$ formation. These techniques are applicable to all fuels and are particularly attractive as control methods for existing units since few, if any, equipment modifications are required (References 3-40 and 3-41). In some cases, however, derating of the unit may be required if there is too limited extra firing capability with the active burners. This is most likely to be a problem with pulverized coal units without spare pulverizer capacity.

Monitoring flue gas composition, especially $O_2$ and CO concentrations, is very important when employing these combustion modifications for $NO_x$ control. Local reducing atmospheres may cause increased furnace slagging when burning coal because of the lower ash fusion temperature associated with reducing atmospheres (References 3-42 and 3-43). In addition, it is important to closely monitor flue gas, excess air, and CO to avoid reducing boiler efficiency through flue gas heat and unburned combustible losses, and to prevent unsafe operating conditions caused by incomplete combustion. For these reasons, accurate flue gas monitoring equipment and increased operator monitoring of furnace conditions are required with these combustion modifications.

As shown in Section 4.1, Table 4-2, emission tests of burners out of service firing on utility boilers have indicated average $NO_x$ reductions of 31 to 37 percent for coal, oil, and natural gas firing compared to earlier baseline levels. A typical burners out of service pattern is shown in Figure 3-5(a).

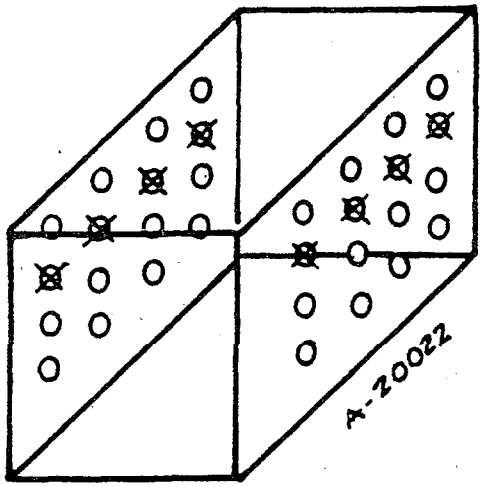


O Active burners

⊠ Burners admitting air only

a. Typical burners out of service arrangement opposed fired unit

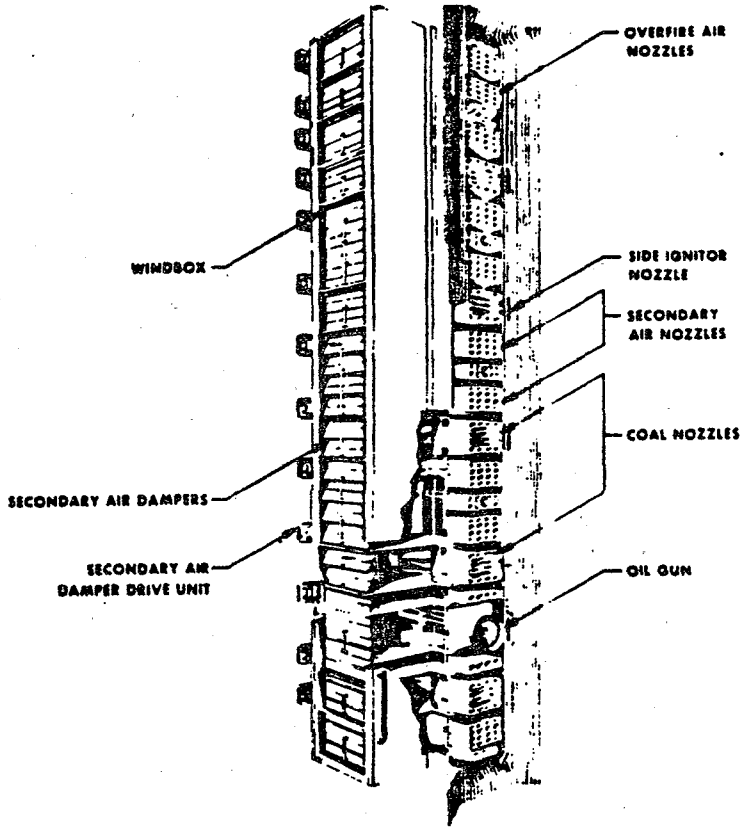


b. Typical overfire air system for tangential fired unit (Reference 4-21)

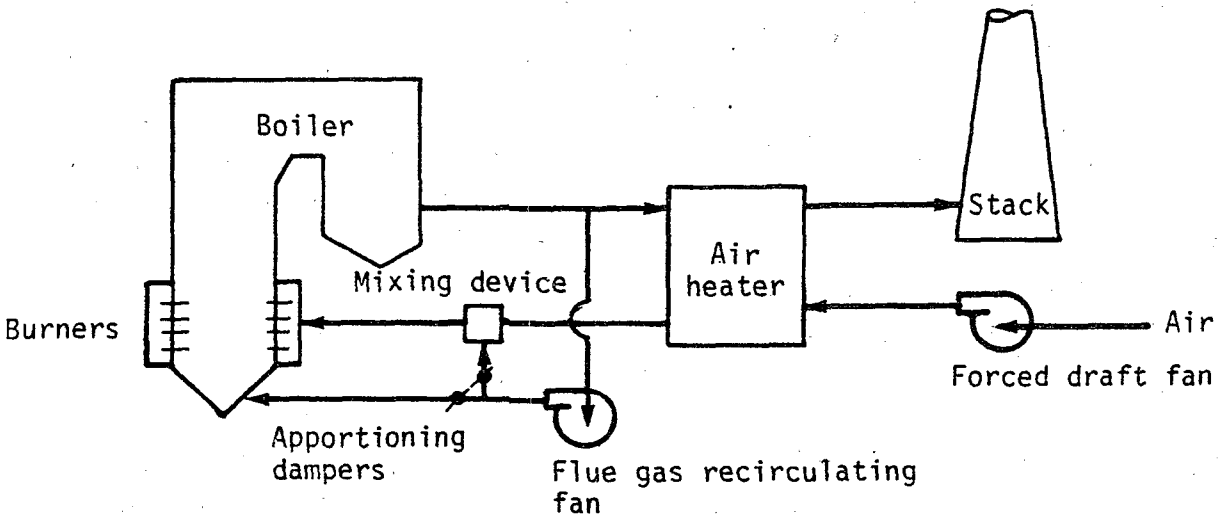


c. Typical flue gas recirculation system for $NO_x$ control

Figure 3-5. Typical arrangements for (b) overfire air, (a) burners out of service, and (c) flue gas recirculation (Reproduced from Reference 3-1, p. 4-26).

Overfire Air (OFA)

The overfire air technique for $NO_x$ control involves firing the burners more fuel rich than normal while admitting the remaining combustion air through overfire air ports or an idle top row of burners.

Overfire air is very effective for $NO_x$ reduction and may be used with all fuels. However, there is an increased potential for furnace tube wasteage due to local reducing conditions when firing coal or high sulfur oil. There is also a greater tendency for slag accumulation in the furnace when firing coal (References 3-23, 3-41, 3-43, and 3-44). In addition, with reduced airflow to the burners, there may be reduced mixing of the fuel and air. Thus, additional excess air may be required to ensure complete combustion. This may result in a decrease in efficiency (References 3-41 and 3-44).

Overfire air is more attractive in original designs than in retrofit applications because of cost considerations. Additional duct work, furnace penetrations, and extra fan capacity may be required. There may be physical obstructions outside of the boiler setting making installation more costly. There may also be insufficient height between the top row of burners and the furnace exit to permit the installation of overfire air ports or to allow sufficient residence time for the completion of combustion (Reference 3-41).

Also, overfire air is more easily implemented without large efficiency or cost penalties on large units than on small ones. As unit size is decreased, furnace volume decreases faster than the available wall surface. Hence, furnace residence times available for fuel combustion tend to be shorter in small units. Staged combustion techniques such as overfire air serve to dalay or prolong the combustion process. Thus, on small units larger proportional increases in furnace size and cost may be required to assure complete fuel combustion with the application of these techniques. Or alternatively, increased excess air rates through the overfire air ports may be required thus leading to decreased unit efficiency. For these reasons, staged combustion techniques are commonly applied to utility size boilers; but their application to smaller units is more limited.

As shown in Section 4.1, Table 4-3, some emission tests of overfire air on utility boilers have indicated average $NO_x$ reductions of about 25 to 60 percent for coal, oil, and natural gas firing compared to earlier baseline levels. A typical overfire air system is shown in Figure 3-5(b).

An off stoichiometric or staged combustion technique similar to overfire air is also applicable to control of $NO_x$ from natural draft process heaters (Reference 3-45). The staged combustion system that has been demonstrated in process heaters uses a number of air lances arranged around each burner. The burner is operated under fuel rich conditions with about 65 percent of the air required for combustion entering through the burner air registers. The remainder of the air required for complete combustion is injected into the flame zone some four feet above the burner. This technique, in conjunction with low excess air operation, reduced $NO_x$ emissions by 21 percent below a baseline of 66 ng/J for a unit firing refinery gas. Fuel consumption was reduced by nearly 5 percent.

3.1.2.3 Flue Gas Recirculation (FGR)

Flue gas recirculation for $NO_x$ control consists of extracting a portion of the flue gas, usually from the economizer outlet with utility boilers, and returning it to the furnace. The flue gas may be admitted through the furnace hopper or through the burner windbox or both. Flue gas recirculation lowers the bulk furnace gas temperature and reduces the oxygen concentration in the combustion zone (References 3-41 and 3-44).

Flue gas recirculation through the furnace hopper and near the furnace exit has long been used for steam temperature control. Flue gas recirculation through the windbox and, to a lesser degree, through the furnace hopper is very effective for $NO_x$ control on gas- and oil-fired units (References 3-40 and 3-44). However, it has been shown to be relatively ineffective on coal-fired units (Reference 3-20).

Flue gas recirculation for $NO_x$ control is more attractive for new designs than as a retrofit application. Retrofit installation of flue gas recirculation can be quite costly. The fan, flues, dampers, and controls as well as possibly having to increase existing fan capacity due to increased draft loss, can represent a large investment. In addition, the flue gas recirculation system itself may require a substantial maintenance program due to the high temperature environment and potential erosion from entrained ash. Thus the cost-effectiveness of this method of $NO_x$ control has to be examined carefully when comparing it to other control techniques.

As a new design feature, the furnace and convective surfaces can be sized for the increase in mass flow and change in the furnace temperatures. In contrast, in retrofit applications the increased mass flow increases turbulence and mixing in the burner zone, and alters the boiler heat absorption profile. Erosion and vibration problems may result (References 3-44 and 3-46). Flame

detection can also be difficult with flue gas recirculation through the windbox. In addition, controls must be employed to regulate the proportion of flue gas to air so that a sufficient concentration of oxygen is available for combustion (Reference 3-47).

On utility boilers, flue gas recirculation has most often been used in combination with other low $NO_x$ combustion techniques. Test data for these types of applications are discussed in Section 4.1. A typical flue gas recirculation system in a utility boiler application is shown in Figure 3-5(c).

Flue gas recirculation has also been applied to a few process heaters. However, no performance data are available for these units. The technique may not be applicable to all types of heaters because it lowers flame temperature and can cause problems with flame stability (Reference 3-48). Flue gas recirculation is therefore unlikely to be used in high temperature applications such as ethylene pyrolysis heaters.

#### 3.1.2.4 Reduced Air Preheat Operation (RAP)

Reducing the amount of combustion air preheat lowers the primary combustion zone peak temperature, generally lowering thermal $NO_x$ production as a result. Because of the energy penalty associated with this technique, it has been used only sparingly in utility and industrial applications. It is applicable to utility steam generators and large industrial boilers which employ heat exchangers to impart about 280°K (500°F) incremental heat to the combustion air.

With present boiler designs, reducing air preheat would cause significant reductions in thermal efficiency and fuel penalties of up to 14 percent. This technique would be feasible for thermal $NO_x$ control if means other than air preheat were developed to recover heat from 420°K to 700°K (300°F to 800°F) gases. For example, in new industrial boilers it is often practical to replace the air preheater with an economizer thereby reducing or eliminating the energy penalty associated with this technique. However, this technique appears relatively ineffective in suppressing fuel nitrogen conversion (References 3-49, 3-50).

This technique is also applicable to turbocharged internal combustion engines and regenerative gas turbines. The turbocharged IC engines normally have an intercooler to increase inlet manifold air density permitting higher mean flowrates, and consequently higher power output. The reduced air temperature also reduces $NO_x$ emissions. However, regenerative gas turbines recover some of the thermal energy in the exhaust gas where temperatures range from 700°K to 870°K (800°F to

1100°F) to preheat the combustion air. Any reduction in air preheat would cause severe fuel penalties unless other means of recovering the heat in the exhaust could be implemented.

3.1.2.5 Reduced Firing Rate

Thermal $NO_x$ formation generally increases as the volumetric heat release rate or combustion intensity increases. Thus, $NO_x$ can be controlled by reducing combustion intensity through load reduction (or derating) in existing units, and by enlarging the firebox in new units. The reduced heat release rate lowers the bulk gas temperature which in turn reduces thermal $NO_x$ formation (Reference 3-51).

The heat release rate per unit volume is generally independent of unit rated power output. However, the ratio of primary flame zone heat release to heat removal increases as the unit capacity is increased. This causes $NO_x$ emissions for large units to be generally greater than for small units of similar design, firing characteristics, and fuel.

The increase in $NO_x$ emissions with increased capacity is especially evident for gas-fired boilers, since total $NO_x$ emissions are due to thermal $NO_x$. However, for coal-fired and oil-fired units the effects of increased capacity are less noticeable, since the conversion of fuel nitrogen to $NO_x$ for these fuels represent a major component of total $NO_x$ formation. Still, a reduction in firing rate will affect firebox aerodynamics which may, consequently, affect fuel $NO_x$ emissions. But such effects on fuel $NO_x$ production are less significant.

Reduced firing rate often leads to several operating problems. Aside from the limiting of capacity, low load operation usually requires higher levels of excess air to maintain steam temperature and to control smoke and CO emissions. The steam temperature control range is also reduced substantially. This will reduce the operating flexibility of the unit and its response to changes in load. The combined results are reduced operating efficiency due to higher excess air and reduced load following capability due to a reduction in control range.

When the unit is designed for a reduced heat release rate, the problems associated with derating are largely avoided. The use of an enlarged firebox produces $NO_x$ reductions similar to load reduction on existing units.

### 3.1.2.6 Steam and Water Injection (WI)

Flame temperature, as discussed above, is one of the important parameters affecting the production of thermal $NO_x$. There are a number of possible ways to decrease flame temperature via thermal means. For instance, steam or water injection, in quantities sufficient to lower flame temperature to the required extent, may offer a control solution. Water injection has been found to be very effective in suppressing $NO_x$ emissions from internal combustion engines and gas turbines; Figure 3-6 shows $NO_x$ emission reductions from a gas turbine as high as 80 percent (Reference 3-52).

Since steam and water injection reduce $NO_x$ by acting as a thermal ballast, it is important that the ballast reach the primary flame zone. Combustion equipment manufacturers vary in their methods of water or steam introduction. The ballast may be injected into the fuel, combustion air, or directly into the combustion chamber.

Water injection may be preferred over steam in many cases, due not only to its availability and lower cost, but also to its potentially greater thermal effect. In gas- or coal-fired boilers, equipped for standby oil firing with steam atomization, the atomizer offers a simple means for injection. Other installations will require special rigging so that a developmental program may be necessary to determine the degree of atomization and mixing with the flame required, the optimum point of injection, and the quantities of water or steam necessary to achieve the desired effect.

The use of water injection may entail some undesirable operating conditions, such as decreased thermal efficiency and increased equipment corrosion. This technique has the greatest operating costs of all combustion modification schemes with a fuel and efficiency penalty typically of about 10 percent for utility boilers and about 1 percent for gas turbines. It has therefore not gained much acceptance as a $NO_x$ reduction technique for stationary combustion equipment except for gas turbines (References 3-49 and 3-50). Gas turbines, in addition to having the lowest efficiency losses with water injection, also showed no major operational problems or reduced equipment life with this technique. Water injection for $NO_x$ reduction does not appear to have a significant effect on stack opacity and emissions of CO and HC.

### 3.1.2.7 Combinations of Techniques

Since 1969 it has been demonstrated that several of the previously discussed modification techniques can be effectively utilized in combination since they reduce $NO_x$ by different mechanisms. Most often, off stoichiometric combustion is used with low excess air or load reduction on all fuel-boiler type configurations. For oil- and gas-fired units flue gas recirculation is used in conjunction with the above techniques. Flue gas recirculation and load reduction lower peak

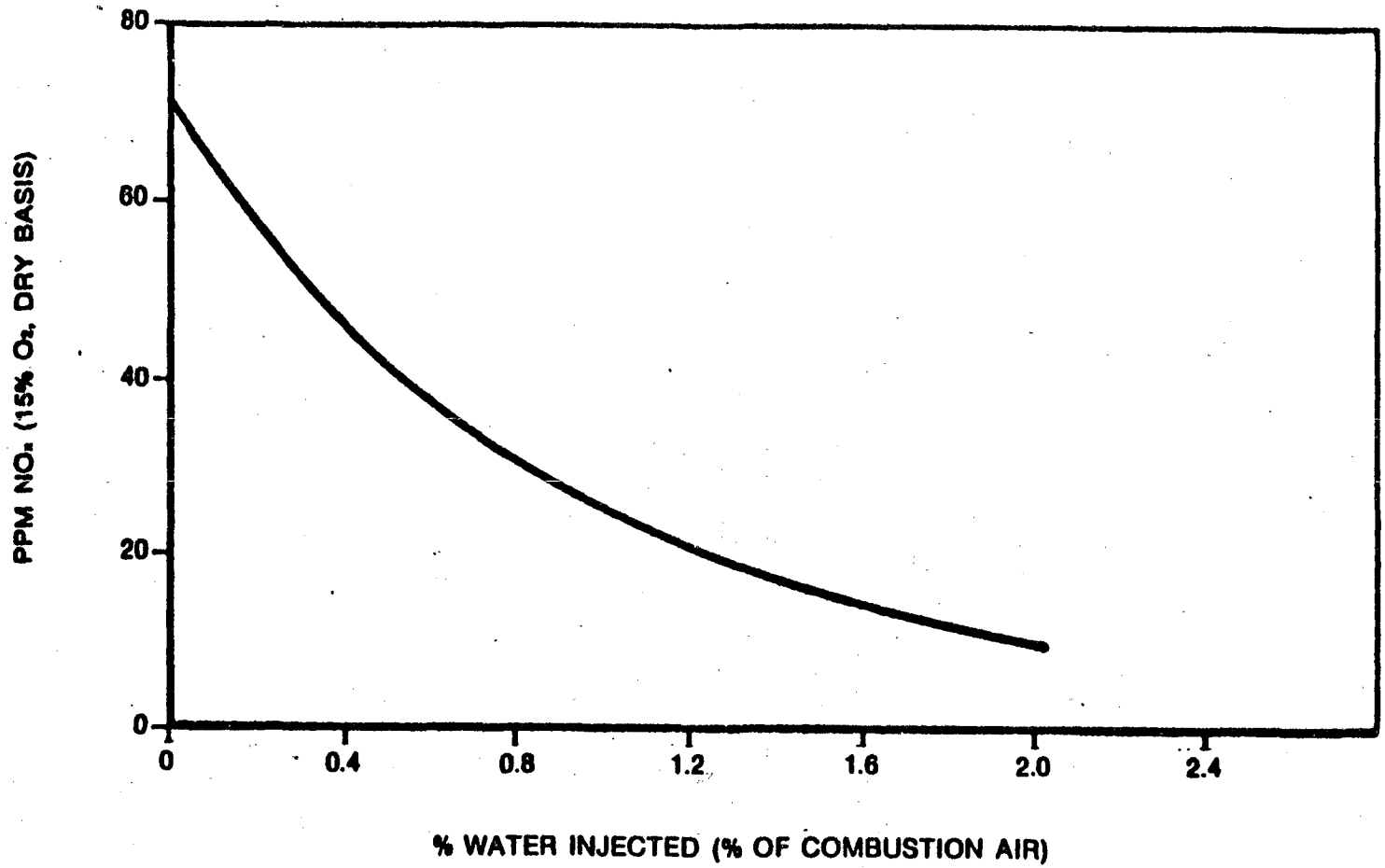


Figure 3-6. Correlation of $NO_x$ emissions with water injection rate for natural gas fired gas turbine (Houston L&P Wharton No.43 unit) (Reference 3-52).

combustion temperatures, while off-stoichiometric operation reduces the amount of fuel burned at peak temperature under oxidizing conditions. For the most part, combining control techniques has been shown to be complementary but not additive for $NO_x$ reduction (Reference 3-49).

### 3.1.3 Equipment Design Modification

#### 3.1.3.1 Burner Configuration

Burner or combustor modification for $NO_x$ control is applicable to all stationary combustion equipment categories. The specific design and configuration of a burner has an important bearing on the amount of $NO_x$ formed. Certain design types have been found to give greater emissions than others. For example, the spud-type gas burner appears to give a higher emission rate than the radial spud type, which, in turn, produces more $NO_x$ than the ring type.

During the early 1970's specially designed "low-$NO_x$" burners were produced for thermal $NO_x$ control. For the most part, they were designed for utility and industrial boilers and employ inflame LEA, OSC, or FGR principles. The aim is to strike a balance between minimum $NO_x$ formation and acceptable combustion of carbon and hydrogen in the fuel.

There are currently several commercial low-$NO_x$ gas and oil burner designs for boilers and process heaters in operation and under development (References 3-53 through 3-57). Full scale test results for boilers in Japan show reductions in $NO_x$ emissions from 40 to 60 percent with low-$NO_x$ gas burners. Sub-scale tests with single burners of the type normally used in utility boilers have indicated that simple changes in burner block and nozzle geometry and in swirl vane angles can decrease $NO_x$ production by up to 55 percent (References 3-54 and 3-58). Some of the more innovative methods for oil burners include: flame splitting distributor tips which cause a flower petal flame arrangement, and atomizers with fuel injection holes of different diameters which create fuel-rich and fuel-lean combustion zones (References 3-53, 3-56, 3-58). Up to 55 percent reductions in $NO_x$ emissions are reported with the use of these nozzle tips. However, the change in flame shape may cause problems due to impingement on walls, and effectiveness may be reduced as flames interact in multiburner furnaces.

Other air-fuel modifications include a low-$NO_x$ burner (offered by at least one company in the U.S.) for oil- and gas-fired package boilers. This burner uses shaped fuel injection ports and controlled air-fuel mixing to create a thin stubby ring-shaped flame (References 3-53, 3-55). With this modification, reductions in $NO_x$ from 20 to 50 percent are claimed. The most extensive air-fuel

modifications involve the self-recirculating and staged combustion chamber type of burners, used in industrial process furnaces. These burners are equipped with a prevaporization or a precombustion chamber in the windbox. In the chamber the fuel is vaporized and premixed with part of the combustion air, or is allowed to undergo partial combustion under oxygen deficient conditions before being discharged into the furnace. $NO_x$ reductions of about 55 percent are typical for these devices.

Low $NO_x$ burners are the most common type of $NO_x$ emission control technique applied to process heaters. The most common type of low $NO_x$ burner can be best described as a two-stage combustion burner which is fired fuel rich in the first stage. The burner is designed to inject tertiary air after sufficient time has elapsed in the reducing zone of the flame. Controlled introduction of the tertiary air provides reduction of $NO_x$ emissions in the reducing zone of the flame without significant changes in flame pattern and burner operation.

A second kind of staged combustion burner is the staged fuel burner. This technique involves combustion of a fuel with high excess air. The remainder of the fuel is injected in the second stage of the reaction and combustion is completed at low excess air. The high excess air permits the first stage of the combustion to occur at a low temperature. Depending on the amount of excess air, the theoretical temperature may be as low as 1090°C (2000°F). As the combustion reaction goes to completion in the first zone, the additional fuel is injected. The second reaction begins with a reduced partial pressure of oxygen which tends to limit the formation of $NO_x$. Other vendors offer low $NO_x$ burners based on flue gas recirculation and two stage combustion. The self-recirculating gasification (SRG) burner has been designed to employ flue gas recirculation, two-staged combustion, gasification reactions, and low excess air. The key feature is the creation of an exceptionally strong recirculation eddy in the burner throat tile. This draws combustion reaction products from the furnace to gasify the fuel stream. The primary air flow is between ten and thirty percent stiochiometric depending upon the design. The result is that the gases leaving the burner throat are very rich in $H_2$ and CO.

Several utility boiler manufacturers have also been active in the development of new burners designed to reduce $NO_x$ emissions from coal-fired units. Most low $NO_x$ burners designed for utility boilers control $NO_x$ by reducing flame turbulence, delaying fuel/air mixing, and establishing fuel-rich zones where combustion initially takes place. This represents a departure from the usual burner design procedures which produce high turbulence, high intensity, rapid combustion flames. The longer, less intense flames produced with low $NO_x$ burners result in lower flame temperatures

which reduce thermal $NO_x$ generation. Moreover, the reduced availability of oxygen in the initial combustion zone inhibits fuel $NO_x$ conversion. Thus, both thermal and fuel $NO_x$ are controlled by the low $NO_x$ burners.

The Babcock and Wilcox Company is currently installing the dual register pulverized coal-fired burner in all its new utility boilers in order to meet current NSPS (References 3-46 and 3-59). The limited turbulence, controlled diffusion flame burner is designed to minimize fuel and air mixing at the burner to that required to obtain ignition and sustain stable combustion of the coal. A Venturi mixing device, located in the coal nozzle, provides a uniform coal/primary air mixture at the burner. Secondary air is introduced through two concentric zones surrounding the coal nozzle, each of which is independently controlled by inner and outer air zone registers.

At least seven dual register burner-equipped utility boilers have been tested for $NO_x$ emissions (Reference 3-59). Tests on four bituminous coal-fired units showed $NO_x$ emissions ranging from 190 to 260 ng/J (0.45 to 0.6 lb/$10^6$ Btu, 320 to 420 ppm). Tests on three subbituminous coal-fired units showed $NO_x$ emissions in the range of 130 to 150 ng/J (0.3 to 0.35 lb/$10^6$ Btu, 210 to 250 ppm). Comparisons with $NO_x$ emissions from similar units equipped with the high turbulence older burners show reductions in $NO_x$ levels from 40 to 60 percent due to the new burner design.

In another recently reported test of the dual register burner on a bituminous coal unit, EPA collected approximately 68 days of continuous monitoring data (Reference 3-60). Daily average emissions were consistently below 200 ng/J (0.47 lb/$10^6$ Btu) and 30 day rolling average emissions ranged from 160 to 170 ng/J (0.37 - 0.39 lb/$10^6$ Btu).

B&W claims that $NO_x$ control through its dual register burners is superior to staging as it maintains the furnace in an oxidizing environment, hence minimizing slagging and reducing the potential for furnace wall corrosion when firing high sulfur bituminous coal. Also, more complete carbon utilization can be achieved due to better coal-air mixing in the furnace. Finally, lower oxygen levels are required with all the combustion air admitted through the burners rather than having some of the total air injected above the burner zone.

Although the dual register burners were developed for use in new boilers, they can also be retrofitted to older units. However, the new boilers are also designed to provide airflow control on a per pulverizer basis. This may not be possible in some of the older units, or the cost involved in retrofitting a compartmented windbox and making the necessary changes in pulverizer burner piping may be high. If careful control of fuel and air to each burner is not feasible, the

burners will not be as effective in reducing $NO_x$ emissions. Nevertheless, the new burners should reduce $NO_x$ levels below those obtained with the older high turbulence burners. They may still be considered for retrofit application, perhaps in conjunction with other $NO_x$ control techniques, but much development work remains.

Foster Wheeler Energy Corporation has developed a dual register coal burner for installation in its new boilers (References 3-43 and 3-61). The new burner reduces turbulence as compared to the older designs and causes controlled, gradual mixing of fuel and air at the burner. This is achieved using a dual throat with two registers which splits the secondary air into two concentric streams with independently variable swirl. The mixing rate between the primary and secondary air streams and the rate of entrainment of furnace gases can thus be varied.

Test results for the new Foster Wheeler burners are reported in References 3-43 and 3-61. Reductions in $NO_x$ emissions of about 40 percent were observed on a four-burner steam generator when operated at full load with the new burners. Three utility steam generators, two 265 MW opposed fired units and one 75 MW front wall unit, have been retrofitted with the new burners and tested for $NO_x$ emissions. Controlled $NO_x$ emissions were in the 170 to 220 ng/J (0.4 to 0.5 lb/$10^6$ Btu, 280 to 350 ppm) range, about 40 to 50 percent lower than similar units with older design burners.

In addition to $NO_x$ control in new units, the Foster Wheeler dual register burner is technically well suited for retrofit application. The airflow to the new burners is controlled individually at each burner by means of a perforated hood. Hence, precise air/fuel control at each burner is possible without incurring major hardware changes besides burner replacement.

Riley Stoker Corporation is currently modifying the burners used in its turbo furnace to lower $NO_x$ emissions (Reference 3-62). The new burners are designed to be more flexible and to control fuel/air mixing to reduce thermal and fuel $NO_x$. With the new burners and changes in furnace design Riley Stoker expects to meet current NSPS requirements without increased carbon or unburned hydrocarbon losses. The new burners can be used with coal, oil, and gas fuels but are not being considered for retrofit application. No test data are available on the performance of the new burners at present.

In summary, low $NO_x$ burners appear very attractive, with potential $NO_x$ reductions of the order of 50 percent. Data from long term, full scale demonstrations are imminent, and commercial application is well underway.

### 3.1.3.2 Burner Spacing

The interaction between closely spaced burners, especially in the center of a multiple-burner installation, increases flame temperature at these locations. There is a tendency toward greater $NO_x$ emissions with tighter spacing and a decreased ability to radiate to cooling surfaces. This effect is illustrated by the higher $NO_x$ emissions from larger boilers with greater multiples of burners and tighter spacing.

In most new utility boiler designs, vertical and horizontal burner spacing has been widened to provide more cooling of the burner zone area. In addition, the furnace enclosures are built to allow sufficient time for complete combustion with slower and more controlled heat release rates, such as that associated with the off-stoichiometric operating mode. Furthermore, furnace plan areas have been increased to allow for larger heat transfer to the cooling walls. This increase in the burner zone dimensions creates more wall area thus increasing the distance between evenly spaced burners.

Horizontal burner spacing is largest for tangentially fired boilers with the burners being located at each corner of the furnace. Flames in a corner-fired unit interact only at the center of the furnace in the well know spiral configuration. As a result the flames radiate widely to the surrounding cooling surfaces before interacting with one another. Also, the tangential firing configuration results in slow mixing of fuel with the combustion air. For these reasons, tangentially-fired boilers show baseline, uncontrolled emissions below those for other utility boilers firing configurations. It has been observed, however, that for many tangentially-fired units, reductions in $NO_x$ below the naturally low uncontrolled levels is more difficult than reducing $NO_x$ on units with higher uncontrolled emissions (References 3-39 and 3-49).

### 3.1.3.3 Advanced Burner/Furnace Designs

A number of advanced burner designs are being developed and tested to reduce $NO_x$ emissions from coal- and oil-fired utility and industrial boilers. Advanced burners, as compared to low $NO_x$ burners, are defined as those devices still under experimental or pilot scale development for lowering $NO_x$ emission. Burner modification has the potential of lowering $NO_x$ emissions well below levels attainable by conventional combustion modification techniques. Burner modification also has the advantage of requiring minimal changes in current boiler design and operation and is suitable for retrofit application. A few of the techniques under development are discussed below.

Some manufacturers of oil-firing equipment are in the process of developing burners capable of operating at very low levels of excess air. The low excess air requirements increase boiler efficiency and reduce fan power consumption while decreasing $NO_x$ emissions. The low excess air may also reduce $SO_3$ conversion. The Peabody Engineering Company has designed the Air Pressure Recovery (APR) burner designed to operate at excess oxygen levels down to 1/2 percent without increase in particulate and unburned hydrocarbon emissions. The Coen Company is developing the LEA burner which uses a tip swirler to operate down to 0.1 percent excess oxygen (Reference 3-63). Both burners are currently undergoing testing and no data on $NO_x$ emissions are available.

For coal-fired utility boilers, Foster Wheeler is currently testing an advanced dual register split flame burner design. A device added at the burner nozzle splits the primary air-coal flow into several distinct streams. Coal particles become concentrated within each stream and, hence diffuse more slowly into the secondary air. This further inhibits $NO_x$ formation by extending the slow-burning characteristics of the dual register burner. Results from an industrial size test boiler are promising with a $NO_x$ level of approximately 130 ng/J (0.3 lb/$10^6$ Btu) for subbituminous coal (Reference 3-61). However, the burner tested on a 375 MW electrical output boiler produced approximately 215 ng/J (0.5 lb/$10^6$ Btu). A further modification of this burner with a variable velocity split flame nozzle will be installed, and a $NO_x$ level of 150 to 170 ng/J (0.35 to 0.4 lb/$10^6$ Btu) is expected (Reference 3-64).

Babcock & Wilcox and Energy and Environmental Research, under EPA sponsorship, are developing an advanced low $NO_x$ coal burner, the distributed fuel/air mixing burner, for field testing (Reference 3-65). The burner is designed to control both thermal and fuel $NO_x$. Coal and primary air are injected from the center of the burner with a moderate axial component. This stream is surrounded by a divided secondary airstream with a swirl component for stabilization. Tertiary air for burnout is added axially around the periphery of the burner. The arrangement results in a hot, rich recirculation zone at the center of the flame. Time in the rich zone helps maximize evolution of nitrogen from the char and reduce most of the fuel $NO_x$ that may be formed. Also, axial addition of the tertiary air leads to a large flame zone. Heat extraction prior to completion of burnout, along with dilution of the tertiary air by combustion products, lowers the peak flame temperature, thus reducing thermal $NO_x$. Although experimental prototypes have achieved $NO_x$ emissions below 86 ng/J (0.2 lb/$10^6$ Btu), actual field testing has not yet been conducted.

Advanced burners are also under development for tangentially-fired systems (Reference 3-67). Combustion Engineering and Acurex Corporation, the latter under sponsorship of the EPA, are

developing a burner called the "fuel-rich fireball." This burner achieves a fuel-rich, relatively low temperature flame by diverting some of the normal air flow along the furnace walls. The air rejoins the combustion zone higher up in the furnace for complete fuel burnout. Demonstration testing is underway. Another advanced burner for tangentially-fired systems is under development by Mitsubishi Heavy Industries of Japan. The test program for this burner has also involved Japan's Electric Power Development Company and Combustion Engineering of the United States. Pilot scale testing has yielded emissions as low as 86 ng/J (0.2 lb/$10^6$ Btu).

Babcock & Wilcox Company is developing a primary combustion furnace concept for coal-fired utility boilers in a program sponsored by the Electric Power Research Institute (Reference 3-66). The fundamental $NO_x$ control process in this furnace is conversion of fuel nitrogen to $N_2$ through fuel-rich combustion. Pulverized coal is introduced into an extended combustor with substoichiometric air, so that combustion occurs under fuel-rich conditions isolated from the rest of the furnace. The length of the combustor is sufficient to provide the necessary residence time to partially oxidize the coal and permit the desirable $N_2$ producing reactions to occur. Heat is removed along the combustion chamber to prevent slagging. Secondary air is added at the exit of the primary combustion furnace to bring the combustion products to oxidizing conditions before they enter the secondary furnace. Pilot scale testing of a 1 MW (4 x $10^6$ Btu/hr) heat input prototype has achieved the targeted $NO_x$ level of below 86 ng/J (0.2 lb/$10^6$ Btu). Commercial offering of a full scale furnace is not expected until at least 1983 (Reference 3-66).

In summary, several promising advanced burner/furnace concepts are under development and may become available in the next few years. These techniques may yield $NO_x$ emissions substantially lower than current combustion modification techniques.

### 3.1.4 Fuel Modification

While not necessarily thought of as $NO_x$ control techniques, some additional methods either are, or potentially will be, available for reducing $NO_x$ emissions in unique situations. These include various fuel modification techniques. Three candidate techniques are fuel switching, fuel additives, and fuel denitrification.

### 3.1.4.1 Fuel Switching

In the past, the predominant reasons for fuel switching were related to fuel cost or $SO_2$ control. However, conversion to a fuel with a reduced nitrogen content or to one that burns at a lower temperature may also result in a reduction in $NO_x$ emissions. $NO_x$ emission factors for various types of fuels were presented in Section 2.

Natural gas firing is an attractive $NO_x$ control strategy because of the absence of fuel $NO_x$ in addition to the flexibility it provides for the implementation of combustion modification techniques. However, for large fuel burning applications, fuel choice decisions tend to depend on fuel costs and other regulatory constraints, such as the Powerplant and Industrial Fuel Use Act of 1978. Indeed, the trend is toward the use of coal for electric power generation and larger industrial processes. Fuel switching to natural gas or distillate oil is not a promising option for widespread implementation.

Western coals constitute one abundant alternate source of potentially low-$NO_x$ fuels. The direct combustion of western subbituminous coals in large steam generators may produce lower $NO_x$ emissions than with combustion of eastern bituminous coals. Three mechanisms could result in lower $NO_x$ emissions: first, western coals in general contain less bound nitrogen than eastern coals on a unit heating value basis; second, the excess $O_2$ in a steam generator burning western coal can be maintained at very low levels; and third, the high moisture content of western coal produces lower flame temperatures. However, some studies have indicated that these factors may be offset by the higher fuel $O_2$ levels in western coals. These higher levels may lead to increased conversion of fuel bound nitrogen to $NO_x$ (Reference 3-68).

Some potential problems associated with burning low sulfur, high moisture content coals in combustion equipment designed for higher quality coals are listed below (Reference 3-69):

- Poor ignition;
- Reduced boiler load capacity;
- Increased carbon loss;
- Boiler slagging/fouling;
- High superheat steam temperature;
- Flame instability;
- Increased boiler maintenance;
- Reduced boiler efficiency; and
- Reduced collection efficiency of electrostatic precipitator (ESP).

However, most of these operational problems can be solved with current boilers specifically designed to burn these lower grade coals.

Formerly, a major incentive for switching to western coals was the low sulfur content of these fuels. Economic conditions made fuel switching from high sulfur eastern bituminous coals to low sulfur western subbituminous coal competitive with the cost of gas scrubbing for $SO_2$ removal. Therefore, low sulfur, low nitrogen western coals represented a promising short-range option in fuel switching for large industrial and utility boilers. However, the 1977 Clean Air Act Amendments require that NSPS be based on a percentage reduction in the pollutant emissions which would have resulted from the use of fuels which are not subject to treatment prior to combustion. This reduced or eliminated the advantage of fuel switching in many applications.

A potential long-range option is the use of clean synthetic fuels derived from coal. Candidate fuels include low to high Btu gas (3.7 to 30 $MJ/Nm^3$, or 100 to 800 Btu/scf) and synthetic liquids and solids. Two alternatives for utilizing low- and intermediate-Btu gases (up to 26 $MJ/m^3$, or 700 Btu/scf) are firing in a conventional boiler or in a combined gas and steam turbine power generation cycle. The $NO_x$ emissions from lower-Btu gas-fired units are expected to be low due to reduced flame temperatures corresponding to the lower heating value of the fuel. The effects on $NO_x$ formation of the molecular nitrogen and the intermediate fuel nitrogen compounds, such as ammonia, in the lower-Btu gas have not yet been fully determined and require further study.

The synthetic fuel oils or solid solvent refined coal (SRC) may be expected to be high in fuel nitrogen content even though some denitrification may occur in the desulfurization process. This high nitrogen content, carried over from the parent coal, would promote high $NO_x$ emissions. Other potential alternate fuels that might be considered and their potential for fuel or thermal $NO_x$ are listed in Table 3-3.

TABLE 3-3. $NO_x$ FORMATION POTENTIAL OF SOME ALTERNATE FUELS

| FUEL | THERMAL $NO_x$ | FUEL $NO_x$ |
|---|---|---|
| Shale Oil | Moderate | High |
| Coal-Oil Mixture | Moderate | Moderate |
| Coal-Liquid Mixtures | Low | Unchanged[a] |
| Methanol | Low | Low |
| Water-Oil Emulsion | Low | Unchanged |
| Hydrogen | High | Low |

[a]Fuel $NO_x$ is probably unchanged unless a significant amount of low nitrogen oil or methanol replaces part of the coal on a heating value basis.

Besides coal, shale oil is another abundant source of nonpetroleum fossil fuel in the United States. However, current shale oil production is very limited due to economics. The combustion of shale oil will cause higher levels of fuel $NO_x$ because this fuel generally contains bound nitrogen in excess of 2 percent. Distillation of shale oil would reduce fuel nitrogen content, however.

Coal-oil mixtures have recently become of interest as an alternate fuel which could reduce fuel costs for existing oil-fired boilers. $NO_x$ from combustion of this fuel will depend on the quantity of nitrogen present in the coal and oil and the percentages of coal and oil used to make the mixture. However, $NO_x$ emissions are expected to be lower than emissions obtained from combustion of coal only.

Other types of coal liquid mixtures are also under development, including coal-water, coal-oil-water, and coal-alcohol. The primary incentive for development of these fuels is to obtain a relatively cheap coal-based fuel for combustion in existing oil-fired boilers. However, some boiler modifications are expected to be required to burn these fuels. These fuels should burn at a lower temperature than the parent coal thereby reducing thermal $NO_x$ formation.

Methanol is currently produced from the synthesis of methane from natural gas. Some future production may also come from synthetic gas generated from coal and biomass. Baseline $NO_x$ emissions from the combustion of methanol in an experimental hot wall furnace system were reported at 50 to 70 ppm, compared to 240 to 300 ppm for distillate oil. With flue gas recirculation, the $NO_x$ emissions from methanol combustion were reduced to 10 ppm, or 15 percent of the baseline level (Reference 3-70).

In gas turbines 74 percent less $NO_x$ was produced using methanol, compared to distillate oil. The hot wall experimental furnace showed a 20 percent increase in stack heat loss compared to a loss of 14 percent for distillate oil (based on 115 percent theoretical air at a 473°K (390°F) stack temperature). For natural gas, turbine efficiency levels increased by 6 percent due to higher inlet temperatures.

Since water-oil emulsions affect only thermal $NO_x$ these alternate fuels have a definite $NO_x$ reduction potential when distillate oil is used (Reference 3-71). $NO_x$ emission levels from emulsions with approximately 50 mass percent water in distillate oil approached the levels obtained from methanol combustion (Reference 3-72).

Hydrogen as a fuel is used in high energy production concepts such as rocket engines. The high levels of thermal energy released make this fuel attractive for other energy conversion systems. Thermal $NO_x$ levels are, however, high when hydrogen meets with oxygen in the presence of atmospheric nitrogen.

### 3.1.4.2 Fuel Additives

For purposes of this document, a fuel additive is a substance added to any fuel to inhibit formation of $NO_x$ when the fuel is burned. The additive can be liquid, solid, or gas. For liquid fuels, the additive should preferably be a liquid soluble in all proportions in the fuel, and it should be effective in very small concentrations. The additive should not in itself create an air pollution hazard nor be otherwise deleterious to equipment and surroundings.

In 1971, Martin, et al., tested 206 fuel additives in an oil-fired experimental furnace, and four additives in an oil-fired packaged boiler. None of the additives tested reduced NO emissions but some additives containing nitrogen increased NO formation (Reference 3-73). Fuel additives reduced $NO_x$ emissions from gas turbines by an average of 15 to 30 percent but are not attractive due to added cost, serious operational difficulties and the presence of the additives, as pollutants, in the exhaust gas (Reference 3-74). Average $NO_x$ reductions of 15 to 18 percent have been recorded using fuel additives in diesel engines (Reference 3-75).

### 3.1.4.3 Fuel Denitrification

Fuel denitrification of coal or heavy oils could in principle be used to control the components of $NO_x$ emission due to conversion of fuel bound nitrogen. The most likely use of this concept would be to supplement combustion modifications implemented for thermal $NO_x$ control. Current technology for denitrification is limited to the side benefits of fuel pretreatment to remove other pollutants. There is preliminary data to indicate that marginal reductions in fuel nitrogen result from oil desulfurization (Reference 3-76) and from chemical cleaning or solvent refining of coal for ash and sulfur removal (Reference 3-77). The low denitrification efficiency of these processes does not make them attractive solely on the basis of $NO_x$ control. They may prove cost effective, however, on the basis of total environmental impact.

### 3.1.5 Alternate Processes

In the future, some alternate processes may be available which result in lower $NO_x$ emissions than conventional stationary combustion technologies. Some candidate processes include fluidized bed combustion, catalytic combustion, repowering, and combined cycles.

#### 3.1.5.1 Fluidized Bed Combustion

In a fluidized bed combustor (FBC) combustion occurs in an air-supported bed of relatively large (~3.2mm) coal ash and sand or limestone particles. The temperature in the bed is generally in the range of 1,070°K to 1,270°K (1,500°F to 1,900°F) which makes the combustion process self-sustaining. The combustor may be at atmospheric pressure (AFBC) or it may be pressurized (PFBC).

A 30 MW AFBC pilot plant began operation in late 1976 (Reference 3-78). Pressurized systems are still being tested, with a pilot plant planned for the early 1980's. Results of recent work in FBC, the status of FBC development, and EPA, DOE, and EPRI FBC programs can be found in Reference 3-78.

Suggested advantages for fluidized bed combustion compared to conventional boilers are: (1) compact size yielding low capital cost, modular construction, factory assembly and low heat transfer area, (2) higher thermal efficiency, (3) lower combustion temperature resulting in less fouling and corrosion and reduced $NO_x$ formation, (4) potentially efficient sulfur oxides control by direct contact of coal with an $SO_2$ acceptor, (5) fuel versatility, (6) applicable to a wide range of low-grade fuels including char from synthetic fuels processes, and (7) adaptable to a high efficiency gas-steam turbine combined power generation cycle. The principle disadvantages of FBC are: (1) potential large amounts of solid waste (the sulfur acceptor material) and (2) heavy particulate loading in the flue gas.

The feasibility of FBC for power generation and utility boilers depends in part on the following: (1) development of efficient methods for regeneration and recycling of the dolomite/limestone materials used for sulfur absorption and removal, (2) obtaining complete combustion through fly ash recycle or an effective carbon burnup cell, (3) development of a hot-gas particulate removal process to permit use of the combustion products in a combined-cycle gas turbine without excessive blade erosion.

Nitrogen oxides emissions from fluidized bed combustors have been shown to be predominately fuel-derived. Seven to ten percent of fuel nitrogen is converted to $NO_x$ (References 3-79 and 3-80). Experiments with nitrogen-free fuels resulted in $NO_x$ concentrations in agreement with equilibrium

values at the bed temperature. However, coal-fired experiments resulted in $NO_x$ concentrations in excess of the equilibrium values. Furthermore, experiments using nitrogen-free gases with coal yield substantially similar $NO_x$ levels as combustion in air (Reference 3-79).

$NO_x$ emissions have been found to be slightly dependent on coal particle size, the type and amount of sulfur acceptor, the amount of excess air and the design of the combustor itself. Emission levels from pressurized fluidized bed combustors are significantly less than from atmospheric combustors. This is probably a result of greatly increased $NO_x$ decomposition rates at elevated pressures. Even at 100 percent excess air, $NO_x$ emissions from a PFBC are well below the current NSPS. Results of 160 ng/J (0.37 lb/$10^6$ Btu) have been reported (Reference 3-78).

*In general, $NO_x$ control in FBC is a matter of good management of the normal process* variables. If more stringent standards are enacted, conventional $NO_x$ controls, such as flue gas recirculation and off-stoichiometric combustion, may be used. Exploratory results indicate that two-stage combustion could be advantageous for both $NO_x$ and $SO_x$ control.

### 3.1.5.2 Catalytic Combustion

Catalytic combustion refers to combustion occurring in close proximity to a solid surface which has a special (catalytic) coating. A catalyst accelerates the rate of a chemical reaction, so that substantial rates of burning should be achieved at low temperatures, avoiding the formation of $NO_x$. Moreover, the catalyst itself serves to sustain the overall combustion process, thereby minimizing the stability problems (References 3-81 and 3-82). However, the overall success of a catalytic combustion system in reducing CO and unburned hydrocarbons (UHC) to low levels is a function of both heterogeneous and gas phase reactions; surface reactions alone appear to be unable to achieve the desired low levels.

Emissions from catalytic experiments have typically been: $NO_x$ <2 ppm, UHC ≅4 ppm, and CO = 10 to 30 ppm. Both gaseous and distillate fuels have been used and combustion efficiencies above 95 percent have been obtained (Reference 3-82).

At high temperatures, above 1,270°K (1,830°F), catalyst degradation can be significant. Excess air can be used to lower the bed temperature; but except for gas turbines, excess air is unattractive since it also reduces thermal efficiency. Further research is underway to consider other systems, such as catalyst bed cooling, exhaust gas recirculation and staged combustion to maintain a low bed temperature.

Recent tests evaluated the applicability of catalytic combustors for gas turbines. Test fuels used were No.2 distillate oil and low Btu synthetic coal gas, for a range of pressure, temperature, and mass flow conditions. Test results show that the catalyst bed temperature profile at the bed exit was very uniform for low Btu gas, but not as uniform for No.2 oil. Exceptionally low emissions (2 to 3 ppm $NO_x$, 20 to 30 ppm CO) were achieved for both fuels, and unburned hydrocarbons were less than 1 ppm (Reference 3-83). However, much additional work is needed before catalytic combustion can be applied to gas turbines in the field.

Catalytic combustion has been demonstrated to be effective in removing pollutants such as $NO_x$, CO, and UHC, but at present, catalytic combustors are limited by the catalyst bed temperature capability. Various government agencies and private industries are developing catalysts that will withstand high temperatures, retain high catalyst activity, and last longer. Catalytic combustion systems are also under development; it appears that in the future catalytic combustion concepts may be incorporated into new gas turbine and residential, commericial, and industrial heating designs.

3.1.5.3 Repowering

Repowering adds a combustion turbine to an existing steam plant, providing additional capacity at lower initial costs and lower energy costs than other spare capacities available to a utility.

Repowering includes: (1) steam turbine repowering, in which gas turbines and new heat recovery boilers are added to an existing steam electric generating plant; (2) boiler repowering in which gas turbines are added to the existing steam generating facilities for power generation, requiring the conversion of existing conventional boilers to heat recovery type boilers; and (3) gas turbine repowering in which a steam generating plant is added to an existing gas turbine plant (References 3-84 and 3-85).

Depending on the system and power needs, repowering of existing facilities offers the following advantages:

- There is no need to acquire and develop a new plant site;
- Repowering generally requires smaller increments of investment, saving on fixed charges since major investment on new plants is deferred;
- Repowering improves heat rate, which lowers fuel consumption;

- The environmental impact is reduced, with improving schedules for environmental and site related approvals;
- For boiler and steam turbine repowering, there is no increase in cooling water requirements; and
- Gas turbines may be operated independently as peaking units, which provides greater plant flexibility.

References 3-84 and 3-85 describe in detail the application of repowering to boiler, gas turbine, and steam generating plants; savings in capital and operating costs are anticipated. Repowering of two steam turbine units in the City of Glendale, California increased power output by 75 MW and reduced power cost to the consumer by 8 percent (Reference 3-86). Under contract from the Electric Power Research Institute, Westinghouse Electric Corporation is evaluating repowering conventional steam power plants without replacing the boiler. Earlier pilot scale work for EPRI by KVB Inc. shows a low $NO_x$ potential for repowering. The boiler is fired fuel-rich using approximately 85 percent of the $NO_x$ bearing gas turbine exhaust as the combustion air. The remaining gas turbine exhaust provides the boiler second stage air which is injected through overfire air ports above the fuel-rich primary stage. Up to 55 percent of the $NO_x$ in the gas turbine exhaust is chemically reduced by the fuel rich primary stage of the boiler. Also, the use of overfire air reduces the $NO_x$ formed in the boiler by up to 50 percent.

### 3.1.5.4 Combined Cycles

Combined cycles may, in the long term, reduce emissions of sulfur oxide, nitrogen oxide, particulate matter, and waste heat while generating power at efficiencies higher than conventional fossil-fueled steam stations (Reference 3-87). The combined gas and steam turbine system could consist of a gas turbine firing a coal-derived fuel, which exhausts into an unfired waste-heat recovery boiler. In this system, a portion of the power would be generated by the gas turbine and a portion by the steam boiler system. Combined cycle efficiency improves significantly as the gas turbine inlet temperature is increased. At turbine inlet temperatures of 1,480°K (2,200°F), an efficiency improvement of 2 percentage points per 55°K (100°F) increase in turbine inlet temperature is found.

## 3.2 COMBUSTION FLUE GAS TREATMENT

Historically, the major $NO_x$ control emphasis in the United States has been on combustion or process modification. However, in Japan where $NO_x$ emission standards are more stringent, flue gas treatment (FGT) technologies have undergone extensive development and implementation. Recently, in the U.S. several pilot and demonstration scale units have been built and operated.

Flue gas treatment consists of any of several technologies designed to remove or eliminate $NO_x$ in the flue gas downstream of the combustion zone. Several FGT processes are potentially capable of very high (greater than 80%) $NO_x$ removal efficiencies. And since FGT processes are located downstream of the combustion zone, this $NO_x$ control can occur in addition to any control already achieved with combustion modifications. The application of FGT will usually involve considerably more construction and expense than the comparatively simple combustion modifications. But FGT may prove to be a viable control alternative for situations where very high levels of control are needed.

These postcombustion processes can be divided into dry or wet types. Some dry processes are designed to control $NO_x$ alone while others are designed to control $SO_x$ and $NO_x$. The wet processes employ a wet scrubber to control both pollutants. This subsection briefly describes some of the major FGT processes under development and how they work to control $NO_x$. Most of the development of FGT processes has been undertaken with application to utility boilers in mind. Consequently, more extensive discussions of FGT technology development status and process impacts are reserved to the section on $NO_x$ control for utility boilers, Section 4.1. Much of the material on FGT was taken from References 3-88 and 3-89; the reader is referred to these and other documents (e.g. References 3-90, 3-91, and 3-92) for additional information.

### 3.2.1 Dry Flue Gas Treatment

The dry processes can be categorized into four subdivisions: catalytic reduction, noncatalytic reduction, adsorption, and irradiation. The majority of the dry processes are of the reduction type. These catalytic and noncatalytic reduction processes can also be classified as selective or nonselective processes based on the type of reducing agent used. The majority are selective and usually use $NH_3$ as the reducing agent. If the $NH_3$ is injected after the boiler economizer, where temperature of the flue gas is about 370°C to 450°C (700°F to 800°F), a catalyst is necessary. These processes are described as selective catalytic reduction (SCR) processes. If $NH_3$ is injected into the secondary superheater region of the boiler, where temperature of the flue gas approaches 980°C (1,800°F), a catalyst is not necessary. These processes are described as

selective noncatalytic reduction (SNR) processes. This subsection briefly describes SCR, SNR, and other dry FGT processes.

### 3.2.1.1 Selective Catalytic Reduction (SCR)

The SCR method is the most advanced FGT method, and the one on which the overwhelming majority of existing FGT units are based. As with the majority of all FGT processes, most of the SCR processes were developed in Japan.

SCR systems use ammonia to selectively reduce nitrogen oxides. The chemical mechanisms can best be summarized by the following gas phase reactions.

$$4NO + 4NH_3 + O_2 \rightleftharpoons 4N_2 + 6H_2O \qquad (3\text{-}6)$$

$$2NO_2 + 4NH_3 + O_2 \rightleftharpoons 3N_2 + 6H_2O \qquad (3\text{-}7)$$

The first reaction predominates since flue gas $NO_x$ consists primarily of NO. Oxygen is in large excess in the flue gas and does not limit the extent of reaction.

A process flow diagram is shown for a $NO_x$ only SCR process in Figure 3-7. Flue gas is taken from the boiler between the economizer and air preheater. Ammonia, taken from a liquid storage tank and vaporized, is injected and mixed with the flue gas prior to the reactor. The flue gas passes through the catalyst bed where $NO_x$ is reduced to $N_2$. The flue gas then exits the reactor and is sent to the air preheater and, if necessary, additional pollutant control devices (e.g. FGD system, ESP).

With SCR systems it is desirable to treat flue gas exiting the economizer at 300 to 400°C, prior to any air preheater, since it is at this temperature range that the catalysts show the optimum range of reactivity and selectivity (Reference 3-88). Research and development on catalyst formulations and shapes during recent years has resulted in some standardization among the catalyst types offered. A catalyst formula consisting primarily of oxides of titanium and vandium appears to be universally used (Reference 3-92). This formulation has proven to be resistant to poisoning by sulfur compounds in the flue gas.

Reactor designs tend to vary depending on the application. Catalyst pellets in a fixed bed are commonly used for gas-fired applications. For oil- or coal-fired applications where the flue gas contains particulate matter, reactor designs usually incorporate honeycomb, pipe, or parallel

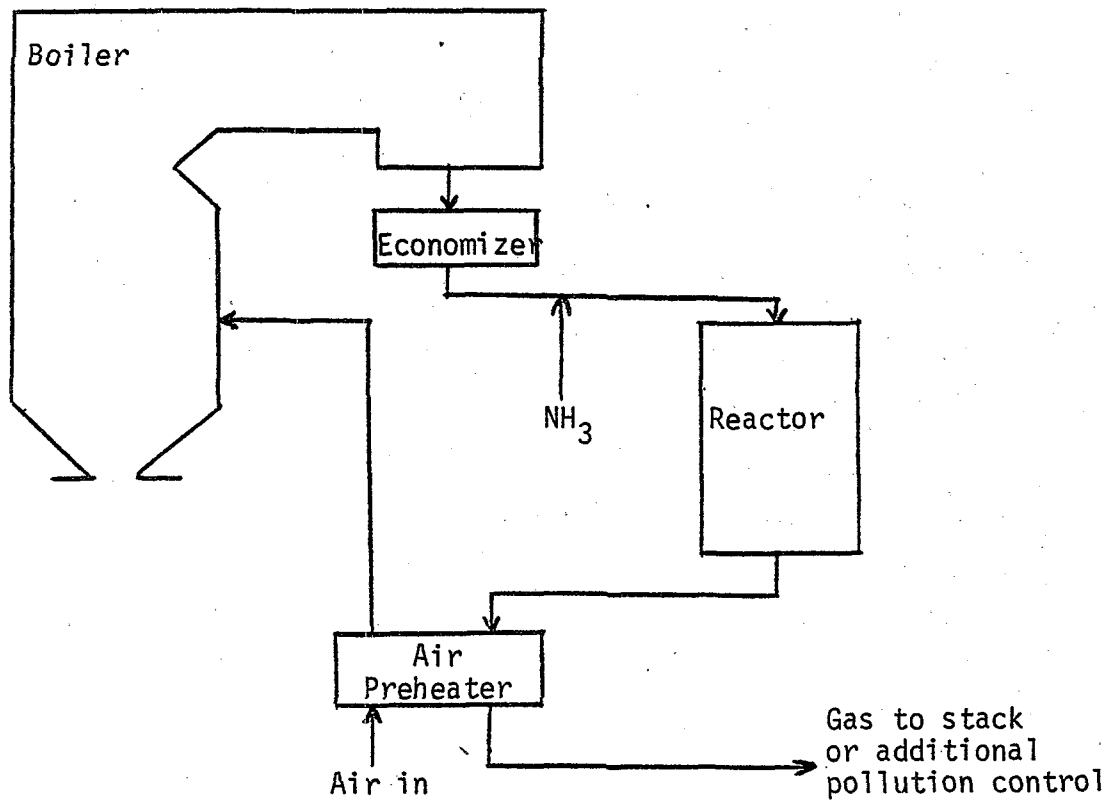


Figure 3-7. Flow diagram for typical $NO_x$-only SCR process.

plate shaped catalysts which allow the flue gas to pass in parallel along the catalyst surface. Another design uses a moving bed arrangement.

$NO_x$ emissions from boilers using SCR processes in Japan are generally reduced by 80 percent. Higher reductions are possible but costs are greater for these units (Reference 3-92). As discussed in Section 4.1, there are presently over 60 full scale SCR units operating on gas- or oil-fired boilers in Japan. Also, two commercial units are operating on coal-fired boilers. Construction is scheduled to be completed during 1981-1984 on at least 14 additional SCR units on coal-fired boilers in that country. In the U.S., SCR applications have been limited to a few pilot scale units on coal-fired boilers and a demonstration scale unit under construction on an oil-fired utility boiler.

3.2.1.2 Selective Noncatalytic Reduction (SNR)

Exxon Research and Engineering Corporation developed the SNR process in which $NH_3$ is injected into the boiler where proper flue gas temperatures (about 900 to 1010°C, 1650 to 1850°F) allow the reduction of $NO_x$ by reaction with $NH_3$ to proceed without a catalyst. Generally, 40 to 60 percent $NO_x$ reduction is achieved with $NH_3$:$NO_x$ molar ratios of 1:1 to 2:1. SNR may be more attractive than SCR in cases where only 40 to 60 percent $NO_x$ is needed since SNR is simple and does not require expensive catalysts.

The general disadvantage of SNR is the limited $NO_x$ control achievable, especially with larger boilers. This limited control generally results from the difficulty of achieving rapid uniform mixing of $NH_3$ with the flue gas and from the variations of flue gas temperature and composition usually present within the boiler region where SNR occurs. $NH_3$ consumption and unreacted $NH_3$ levels can also be high.

There are several large SNR units installed in Japan, between 30- and 100-$MW_e$ capacity, mostly supplied by Tonen Technology (a subsidiary of Toa Nenryo) which has a license from Exxon. These units are operated on gas- and oil-fired boilers or furnaces. Practically all are only for emergency use during a photochemical smog alert or when total plant emissions exceed the regulation.

There are presently two commercial SNR plants operating in the United States. One is on a glass melting furnace and the other a petroleum refinery, both located in California. The construction of five other industrial-scale units is planned. The SNR process is also being installed by Exxon at the No.4 oil-fired unit of the Haynes Station of the Los Angeles Department of Water and Power.

### 3.2.1.3 Other Dry FGT Processes

In addition to SCR and SNR, other dry $NO_x$ control processes are being developed which will allow simultaneous control of $SO_x$. These include:

(1) Activated carbon processes where $NH_3$ reduces $NO_x$ to $N_2$;

(2) Copper oxide processes where $NH_3$ reduces $NO_x$ to $N_2$; and

(3) Electron beam irradiation processes in which $NH_3$ is added to produce ammonium sulfate and nitrate.

The optimum temperature range for simultaneous $SO_x$ and $NO_x$ control with activated carbon processes is 220°C to 230°C (430°F to 445°F). Although $NO_x$ may be adsorbed below 100°C (212°F), for treating large quantities of flue gas above 100°C the carbon is mainly useful as an $NO_x$ reduction catalyst. Therefore, while $NO_x$ is converted to $N_2$ by reaction with $NH_3$ in the presence of the activated carbon catalyst, $SO_2$ is simultaneously adsorbed by the carbon to form $H_2SO_4$. The $H_2SO_4$ may also compete for $NH_3$ in forming ammonium sulfate or bisulfate. The formation of these ammonium salts increases $NH_3$ consumption and also lowers catalyst activity. The carbon must be regenerated, either by washing or thermal regeneration. Washing produces a dilute solution. Concentration of the solution to produce a fertilizer requires much energy. Therefore, thermal regeneration seems to be preferred. A concentrated $SO_2$ gas is recovered, which can be used for sufuric acid or elemental sulfur production.

The major drawback of the activated carbon processes is the enormous consumption of activated carbon, which is more expensive than ordinary carbon used only for $SO_x$ removal. Since carbon and ammonia consumption increase with the $SO_2$ content of the flue gas, the process is best suited for flue gases relatively low in $SO_2$. In Japan Sumitomo Heavy Industries and Unitika Company have operated activated carbon pilot plants of 0.6 MW and 1.5 MW capacity respectively.

The Shell Flue Gas Treatment process may simultaneously remove $SO_x$ and $NO_x$. $SO_x$ reacts with the copper oxide acceptor to form copper sulfate. The copper sulfate and copper oxide are SCR catalysts for the $NO_x$ reduction by $NH_3$. Regeneration of the multiple catalyst beds by a reducing gas, such as $H_2$, yields a $SO_2$-rich stream that can be used to produce liquid $SO_2$, elemental sulfur, or sulfuric acid. By eliminating $NH_3$ injection, the process is strictly an FGD process, whereas, eliminating regeneration of the catalyst beds allows the process to be used for only $NO_x$ control. The major disadvantages are the large consumption of fuel for making hydrogen and the catalyst expense.

In addition to the EPA-sponsored pilot plant mentioned earlier, the process has been installed in Japan on a 40-MW oil-fired boiler. The unit has demonstrated 90% $SO_x$ removal and 70% $NO_x$ reduction.

Another process for simultaneous $SO_x$ and $NO_x$ control is the electron beam process developed by Ebara Manufacturing Company in Japan. $NH_3$ is added to the flue gas, after which the gas stream is irradiated with an electron beam in a reactor, promoting the conversion of $SO_x$, $NO_x$, and $NH_3$ to ammonium sulfate and ammonium nitrate. The ammonium sulfate and ammonium nitrate may be collected downstream in an ESP or baghouse and potentially sold as a fertilizer. The most economically practical removal efficiency range appears to be 80% to 90% for each of $NO_x$ and $SO_x$, though higher removals can be achieved with much greater electron beam energy input. The optimum temperature range is 70°C to 90°C (160°F to 195°F).

Ebara has worked on the process since 1971. It has been tested at a 0.3 MW and 3 MW scale in Japan. Avco Corporation in the United States has also examined this technique and has a cross-licensing agreement with Ebara in sharing of technology and in marketing of the process. Although the process appears attractive because of simplicity, simultaneous $SO_x$ and $NO_x$ control, and byproduct formation, there are still many questions concerning costs and byproduct quality which must be determined.

Development of an alternate electron beam scrubbing process was begun in 1979 by Research-Cottrell under contract to the Department of Energy (DOE). With this process a lime spray dryer is located upstream of the reactor. Calcium sulfate and calcium nitrate are produced in the reactor and caught in a downstream baghouse. Some bench scale testing has been done with this process. DOE plans proof-of-concept scale testing of both the ammonia injection and lime slurry injection electron beam processes on real coal-fired slip streams (Reference 3-93).

### 3.2.2 Wet Flue Gas Treatment

The wet FGT processes normally involve simultaneous removal of $SO_x$ and $NO_x$. The major problem associated with wet $NO_x$ control processes is the absorption of $NO_x$ by the scrubbing solution. $NO_x$ in the flue gas is predominantly NO, which is much less soluble than $NO_2$, whereas, $NO_2$ is even less soluble than $SO_2$. The two common methods of removing the $NO_x$ in flue gas by wet processes are: (1) direct absorption of the $NO_x$ in the absorbing solution or (2) gas-phase oxidation to convert the

relatively insoluble NO to $NO_2$, followed by absorption of $NO_2$. Presently, development of the wet $NO_x$ FGT processes has practically ceased because of the complexity and unfavorable economics of these processes in comparison with the dry processes (Reference 3-94).

## 3.3 NONCOMBUSTION GAS CLEANING

Emissions from noncombustion sources as industrial or chemical processes are small relative to the total emissions from stationary sources (1.7 percent). Nationwide $NO_x$ emissions from nitric acid manufacturing are estimated for the year 1980 at 100 Gg (110,000 tons) uncontrolled emissions, which is about 1.0 percent of the total stationary source emissions. The Environmental Protection Agency issued standards (under the authority of the Clean Air Act) that new nitric acid plants constructed after December 23, 1971, have a maximum permitted nitrogen oxide effluent of 1.5 kg (measured as $NO_2$) per Mg of acid (100 percent basis) produced (3 lb/ton). This is equivalent to approximately 210 ppm $NO_x$. For existing plants the maximum nitrogen oxides permitted has been set at 2.75 kg/Mg (5.5 lb/ton) of acid or approximately 400 ppm $NO_x$ in several states. These standards were established in consideration of the then available technology, which was catalytic reduction of $NO_x$ to $N_2$ and water using methane or hydrogen.

Several economic factors, discussed in Section 3.3.2.4 have stimulated development of improved processes for tail gas cleaning and improvements in the nitric acid process itself. One of the major considerations is that much of the residual oxides of nitrogen formed in the manufacture of nitric acid can be recovered and converted into nitric acid, thus increasing the plant yield. Also, new plants can be designed to have low $NO_x$ emissions without add-on control equipment. These designs will be described in Section 3.3.1. Techniques suitable for retrofit abatement for older plants or add-on controls for plants built using old technology include catalytic reduction, extended absorption with and without refrigeration, wet chemical scrubbing, and molecular sieve adsorption. These techniques will be described in Section 3.3.2. The techniques used for other noncombustion sources, such as explosive plants and adipic acid plants, are basically the same as those used for nitric acid plants, but vary with choice depending on economies of scale and throughput.

### 3.3.1 Plant Design for $NO_x$ Pollution Abatement at New Nitric Acid Plants

Nitric acid is manufactured in the United States by the catalytic oxidation of ammonia over a platinum catalyst with the subsequent absorption of the product gases, primarily $NO_2$ and NO, by

water to make nitric acid. A more detailed discussion of the chemical process is given in Section 6. Each of these two catalytic processes have optimum conversions at different operating conditions. Moderate pressures of 300 to 500 kPa allow longer catalyst life by lowering operating temperatures in the initial oxidation reaction. Higher pressures in the range of 800 to 1100 kPa (116 to 160 psia) allow higher absorption rates in the absorption columns with smaller equipment sizes and lower costs. The higher conversions of $NO_2$ to $HNO_3$ allow for smaller equipment for both the main process plus any tail gas treatment required to meet emission standards. Currently most existing plants operate at low or moderate pressures throughout the process. Sections 3.3.1.1 and 3.3.1.2 will discuss how the design of new nitric acid plants has taken these factors into account to increase conversion and decrease emission control costs.

#### 3.3.1.1 Absorption Column Pressure Control

By designing a new plant so that the inlet pressure at the absorber is 800 to 1000 kPa (116 to 145 psia), the efficiency of the absorber can be increased so that an effluent of less than 200 ppm $NO_x$ is emitted. A high inlet gas pressure at the absorber can be achieved either by running the ammonia-oxygen reaction at high pressure, or by running the ammonia-oxygen reaction at low pressure, with compression of the gas stream before introduction to the absorber. Higher absorption pressures will increase the conversion of $NO_2$ to nitric acid and minimize $NO_x$ emissions. However, there are economic penalties in the form of increased equipment cost, thicker walls and compressors, and increased maintenance costs.

#### 3.3.1.2 Strong Acid Processes

Nitric acid is usually produced at strengths of 50 to 65 percent by weight in water due to azeotrope limitations. Azeotropic conditions result in a constant composition in both vapor and liquid phases. With higher pressures nitric acid up to 68 percent can be obtained. Further concentration is sometimes accomplished by dehydration of the acid or further distillation with sulfuric acid addition.

However, nitric acid of high strength can be made directly from ammonia by the Direct Nitric Acid (DSNA) process. Ammonia is burned with air near atmospheric pressure, and the nitrogen oxides are oxidized to nitrogen dioxide in a contact tower. The nitrogen dioxide is then separated from the gas stream by physical absorption in chilled high-concentrated nitric acid, stripped by distillation and then liquified as $N_2O_4$.

The liquid dinitrogen tetroxide is pumped to a reactor together with aqueous nitric acid. Pure oxygen is added and the dinitrogen tetroxide reacts at a pressure of approximately 5200 kPa (760 psig) directly to highly concentrated nitric acid. Variations on the process can produce both strong (98 to 99 percent) nitric acid and weak (50 to 70 percent) nitric acid at the same plant (Reference 3-95). Tail gas emissions from this process are within the 1.5 g/kg (3 lb/ton) $NO_x$ regulation. This occurs primarily by ensuring oxidation to $NO_2$ and physical absorption with the concentrated nitric acid at low temperature.

Concentrated nitric acid has also been made by the SABAR (Strong Acid By Azeotropic Reactivication) process. Ammonia combustion occurs at near atmospheric pressure and at 1,120°K (1,560°F) with the usual waste-heat boiler, tail gas preheater, cooler/condenser effluent train. By mixing the combustion gases with feed air and recycled nitrogen dioxide, and compression, nearly all the NO is converted to $NO_2$. Chemical absorption with an azeotropic mixture of about 68 percent (by weight) nitric acid produces a superazeotropic mixture. A 99 percent (by weight) overhead product is produced by vacuum distillation.

### 3.3.2 Retrofit Design for $NO_x$ Pollution Abatement at New or Existing Nitric Acid Plants

Most existing nitric acid plants were not designed with the present $NO_x$ emission standards in mind. Abatement methods for these plants are installed on a retrofit basis. The available abatement methods include chilled absorption, extended absorption, wet scrubbing, catalytic reduction, and molecular sieve adsorption. In this section, these various control techniques for $NO_x$ are described. These same procedures are also used on new nitric acid plants using the earlier low or moderate operation pressure design where the abatement facility is designed to process the tail gas to meet the 1.5 g $NO_2$/kg of acid product (3 lb/ton) emission standard.

#### 3.3.2.1 Chilled Absorption

The basic principle involved is that the amount of $NO_x$ that can be removed from the process gas by the absorber (water) increases as the water temperature decreases. Therefore, this method of retrofit provides for chilling of the water prior to entry into the absorption tower or by direct cooling of the absorption trays. This method of $NO_x$ reduction has only provided marginal results and has had problems in continuously meeting the NSPS, especially in warm weather. Refrigeration requirements can prove costly, both in equipment and energy use.

### 3.3.2.2 Extended Absorption

One of the most commonly used retrofit processes, which has been used effectively to meet the NSPS, is extended absorption. Figure 3-8 shows the flow diagram of a nitric acid plant after addition of the extended absorption system, which consists of an additional absorber and a pump. This method is offered by several licensors both with and without other features such as compression of the tail gas before entry to the additional tower or a supply of chilled water to the absorption column trays. Because of the additional pressure loss in the second column an inlet pressure of at least 700 kPa (100 psia) is preferred to make the economics of this method attractive.

### 3.3.2.3 Wet Chemical Scrubbing

Wet chemical scrubbing removes $NO_x$ from nitric acid plant tail gases by chemical reaction. Liquids such as alkali hydroxide solutions, ammonia, urea, and potassium permanganate convert $NO_2$ to nitrates and/or nitrites. These techniques produce a liquid effluent which needs disposal. For three recent techniques - urea scrubbing, ammonia scrubbing and nitric acid scrubbing - the effluent is a valuable byproduct which can be reclaimed and sold as fertilizer.

#### Caustic Scrubbing

In this process, $NO_x$ in the tail gas reacts with sodium hydroxide, sodium carbonate, or ammonium hydroxide to form nitrite salts. Although caustic scrubbing removes $NO_x$ from the tail gas, it has not found extensive use in the industry because of the difficulties encountered in disposing of the spent solution. The alkali metal nitrite and nitrate salts contained in the spent solution become a serious water pollutant if released as a liquid effluent, and their concentrations are too dilute for economic recovery.

#### Urea Scrubbing

Urea can be used to treat all gases for $NO_x$ control since it reacts rapidly with nitrous acid. Nitrogen dioxide, $NO_2$ reacts with water to form both nitric acid ($HNO_3$) and nitrous acid ($HNO_2$) in equal proportions. Nitrous acid will rapidly decompose to form NO and $NO_2$. Urea ($CO(NH_2)_2$) when contacted with the tail gas will absorb $NO_2$ indirectly as nitrous acid to form ammonium nitrate, $NH_4NO_3$ and free nitrogen, $N_2$. By depleting the liquid phase of nitrous acid the equilibrium conversion of nitric oxide, NO, to nitrogen dioxide occurs to remove NO also. The

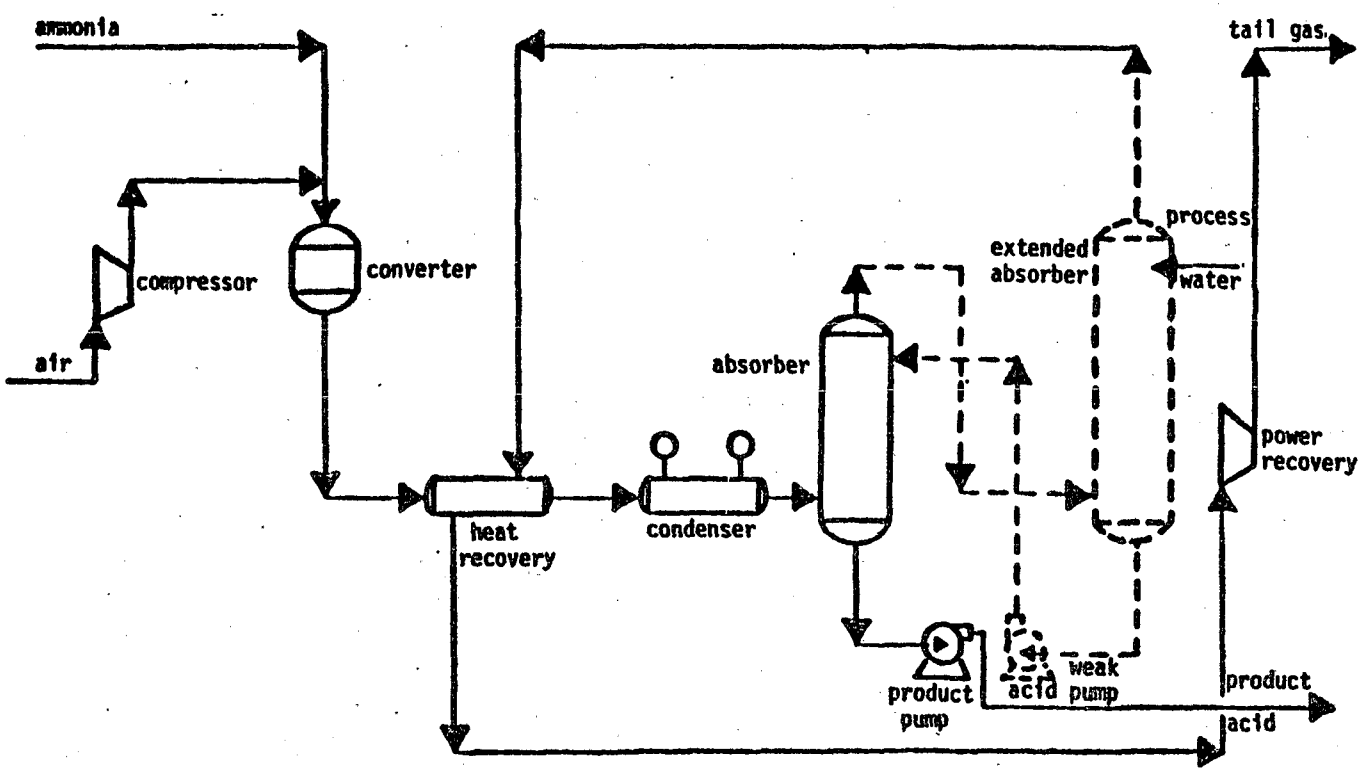


Figure 3-8. Extended absorption system on existing nitric acid plant.

result is conversion of $NO_2$ to either free nitrogen which is vented to the atmosphere or ammonium nitrate which is sold as a fertilizer.

Ammonia Scrubbing

Ammonia, a weak base, can be used to scrub the oxides of nitrogen (weak acids) from the nitric acid plant tail gas. The product of this scrubbing reaction is an ammonium nitrate solution ($NH_4NO_3$) which can be recovered and sold as fertilizer. This process can be applied to tail gas concentrations up to 10,000 ppm and requires 1 to 1.5 percent excess oxygen.

Nitric Acid Scrubbing

Nitric acid scrubbing of tail gas has been commercially applied by one licensor. The process uses both physical absorption and stripping and chemical oxidation absorption. The process uses only water and nitric acid and converts nitrogen oxides in the tail gas to nitric acid at concentrations which can be commercially utilized (Reference 3-96).

Potassium Permanganate Scrubbing

A potassium permanganate scrubbing process has been used to reduce $NO_x$ emissions from 1800 ppm to 49 ppm at a nitric acid concentration plant in Japan. The process reacts potassium permanganate with nitrogen oxide and sodium hydroxide to form potassium sodium manganate, sodium nitrite, and potassium nitrite. The potassium permanganate is regenerated by oxidizing the potassium sodium manganate electrolytically (References 3-97 and 3-98).

3.3.2.4 Catalytic Reduction

There are three types of catalytic reduction processes used for $NO_x$ control: nonselective reduction, which removes both $NO_x$ and oxygen; selective reduction, which removes only $NO_x$; and heterogeneous catalysis used in conjunction with wet scrubbing. Each of these will be discussed in the following paragraphs.

Nonselective Catalytic Reduction

The nonselective reduction process reacts $NO_x$ with $H_2$ or $CH_4$ to yield $N_2$, $CO_2$ and $H_2O$. The process is called nonselective because the reactants first deplete all the oxygen present in the

tail gas, and then remove the $NO_x$. Prior to the large increases in natural gas prices the excess fuel required to reduce the oxygen did not impose a heavy economic penalty. The reactions were exothermic, and much of the heat could be recovered with a waste heat boiler.

The nonselective reduction process is used for decolorization and energy recovery, as well as for $NO_x$ abatement. Decolorization and power recovery units reduce $NO_2$ and NO and react part of the oxygen, but their capacity to reduce NO to elemental nitrogen is limited. The nonselective abatement units carry the process through to NO reduction as well. In nonselective reduction, the tail gases from the absorber are heated to the necessary catalyst ignition temperature, mixed with a reducing agent, such as hydrogen or natural gas, and passed into the reactor and through the catalyst. The main chemical reactions that take place are:

$$CH_4 + 4NO_2 \rightarrow 4NO + CO_2 + 2H_2O \qquad (3\text{-}8)$$

$$CH_4 + 2O_2 \rightarrow CO_2 + 2H_2O \qquad (3\text{-}9)$$

$$CH_4 + 4NO \rightarrow 2N_2 + CO_2 + 2H_2O \qquad (3\text{-}10)$$

Similar equations can be written substituting hydrogen for methane, in which case two moles of hydrogen are needed to replace one mole of methane. The reaction kinetics are such that reduction reaction (3-8) is faster than reduction reaction (3-9), but abatement reaction (3-10) is much slower than reaction (3-9). Thus, decolorization can be accomplished by adding just enough fuel for partial oxygen burnout. If $NO_x$ abatement is required, however, sufficient fuel must be added for complete oxygen burnout.

Both catalyst and nitric acid manufacturers report satisfactory performance for decolorization units. The reduction of total $NO_x$ is limited, but ground-level $NO_2$ concentration in critical areas near the plant is reduced substantially.

$NO_x$ abatement using nonselective catalyst is more difficult technically than decolorization, and commercial results have been less satisfactory. Provisions must be made to control the heat released in reacting all the tailgas oxygen. The thermal control must be done before extensive NO reduction proceeds.

In Section 6 the success of the various types of catalytic abaters in coping with the problems of temperature rise and high space velocities will be discussed. In general, nonselective catalytic reduction is not likely to be used in the future for $NO_x$ control. The availability and cost of natural gas, increasing catalyst cost and poor performance have led to a decline in interest in this process.

## Selective Catalytic Reduction

In selective catalytic reduction, ammonia is reacted with the $NO_x$ to form $N_2$. The oxygen in the tail gas does not react with the ammonia, so stoichiometric amounts of ammonia are used.

In contrast to nonselective techniques, selective catalyst abatement must be carried out within the narrow temperature range of 483°K to 544°K (410°F to 520°F). Within these limits, ammonia will reduce $NO_2$ and NO to molecular nitrogen, without simultaneously reacting with oxygen. The overall reactions are shown in the following equations:

$$8NH_3 + 6NO_2 \rightarrow 7N_2 + 12\ H_2O \qquad (3\text{-}11)$$

$$4NH_3 + 6NO \rightarrow 5N_2 + 6H_2O \qquad (3\text{-}12)$$

Above 544°K, ammonia may oxidize to form $NO_x$; below 483°K, it may form ammonia nitrate.

Selective oxidation with ammonia has several advantages over nonselective reduction:

- The reducing agent, ammonia, is usually readily available since it is consumed as feed stock in the nitric acid process;
- Temperature rise through the reactor bed is only 20°K to 30°K (36°F to 54°F) so that energy recovery equipment, such as a waste heat boiler or high temperature gas turbine, is not required; and
- Lower raw material costs since the amount of ammonia required is approximately equal to the molar equivalent amount of $NO_x$ abated.

## Heterogeneous Catalysis

One wet scrubber process uses heterogeneous catalysis in a packed column to oxidize NO to $NO_2$ (References 3-99 and 3-100). This system is currently in the development stage.

### 3.3.2.5 Molecular Sieve Adsorption

One method of $NO_x$ control involves the adsorption of $NO_x$ onto a solid followed by regeneration of the adsorbent. Materials such as silica gel, alumina, charcoal, and commercial zeolites or molecular sieves have been employed for this method. Molecular sieves have been found to be the most effective medium for this method of control, since they adsorb $NO_2$ selectively. Special sieves have been developed which incorporate a catalyst to simultaneously convert NO to $NO_2$. This process operates best only when low concentrations of oxygen are present, which is true of most tail gas streams. The abatement bed is usually provided with a dehydration section prior to contact with the abatement sieve to improve overall performance.

The adsorbent bed is regenerated by thermally cycling the bed after it is loaded with $NO_2$. The required regenerating gas is obtained by using a portion of the treated tail gas stream to desorb the adsorbed $NO_2$ from the bed. This gas stream is then recycled to the nitric acid plant absorption tower. No other liquid, solid or gaseous effluents are produced by this process.

Two plants using this system were in operation and had experienced difficulties. The process has become unattractive for future installations because of the cost of the catalyst bed, the energy cost of thermal cycling, and the operational difficulties of using a cycling adsorption process with a steady state nitric acid plant.

## REFERENCES FOR SECTION 3


3-1 Lim, K.J., et al., "Environmental Assessment of Utility Boiler Combustion Modification $NO_x$ Controls: Volume 1. Technical Results," EPA-600/7-80-075a, April 1980. pp. 4-1 to 4-56.

3-2 Zeldovich, J., "The Oxidation of Nitrogen in Combustion and Expolsions," Acta Physiochem URSS, (Moscow), Vol. 21, p. 4, 1946 (as cited in Reference 3-1, Section 4).

3-3 Bowman, C.T. and Seery, D.J., "Investigation of NO Formation Kinetics in Combustion Processes: The Methane-Oxygen-Nitrogen Reaction," In Emissions from Continuous Combustion Systems, Cornelius, W. and Agnew, W.G., eds., Plenum, 1972 (as cited in Reference 3-1, Section 4).

3-4 Bartok, W., et al., "Basic Kinetic Studies and Modeling of NO Formation in Combustion Processes," AIChE Symposium Series No. 126, Vol. 68, 1972 (as cited in Reference 3-1, Section 4).

3-5 Halstead, C.J. and Munro, A.J.E., "The Sampling, Analysis, and Study of the Nitrogen Oxides Formed in Natural Gas/Air Flames," Company Report, Shell Research, Egham, Surrey, U.K., 1971, (as cited in Reference 3-1, Section 4).

3-6 Thompson, D., et al., "The Formation of Oxides of Nitrogen in a Combustion System," presented at the 70th National AIChE Meeting, Atlantic City, 1971, (as cited in Reference 3-1, Section 4).

3-7 Lange, H.B., "$NO_x$ Formation in Premixed Combustion: A Kinetics Model and Experimental Data," presented at the 64th Annual AIChE Meeting, San Francisco, 1971 (as cited in Reference 3-1, Section 4).

3-8 Sarofim, A.F. and Phol, J.H., "Kinetics of Nitric Oxide Formation in Premixed Laminar Flames," 14th Symposium (International) on Combustion, The Combustion Institute, Pittsburg, 1973 (as cited in Reference 3-1, Section 4).

3-9 Iverach, D., et al., "Formations of Nitric Oxide in Fuel-Lean and Fuel-Rich Flames," ibid., 1973 (as cited in Reference 3-1, Section 4).

3-10 Wendt, J.O.L. and Ekmann, J.M., "Effect of Fuel Sulfur Species on Nitrogen Oxide Emissions from Premixed Flames," Comb. Flame, Vol. 25, 1975 (as cited in Reference 3-1, Section 4).

3-11 Malte, P.C. and Pratt, D.T., "Measurement of Atomic Oxygen and Nitrogen Oxides in Jet-Stirred Combustion," 15th Symposium (International) on Combustion, The Combustion Institute, Pittsburgh, 1975 (as cited in Reference 3-1, Section 4).

3-12 Mitchell, R.E. and Sarofim, A.F., "Nitrogen Oxide Formation in Laminar Methane Air Diffusion Flames," presented at the Fall Meeting, Western States Section, The Combustion Institute, Palo Alto, California, 1975 (as cited in Reference 3-1, Section 4).

3-13 Bowman, C.T., "Non-Equilibrium Radical Concentrations in Shock Initiated Methane Oxidation," 15th Symposium (International) on Combustion, The Combustion Institute, Pittsburg, 1975 (as cited in Reference 3-1, Section 4).

3-14 Fenimore, C.P., "Formation of Nitric Oxide in Premixed Hydrocarbon Flames," 13th Symposium (International) on Combustion, The Combustion Institute, Pittsburgh, 1971 (as cited in Reference 3-1, Section 4).

3-15 MacKinnon, D.J., "Nitric Oxide Formation at High Temperatures," Journal of the Air Pollution Control Association, Vol. 24, No. 3, pp. 237 to 239, March 1974 (as cited in Reference 3-1, Section 4).

3-16 Heap, M.P., et al., "Burner Criteria for $NO_x$ Control; Volume I -- Influence of Burner Variables on $NO_x$ in Pulverized Coal Flames," EPA-600/2-76-061a, NTIS-PB-259-911/AS, March 1976, (as cited in Reference 3-1, Section 4).

3-17 Bowman, C.T., et al., "Effects of Interaction Between Fluid Dynamics on Chemistry or Pollutant Formation in Combustion," In: Proceedings of the Stationary Source Combustion Symposium; Volume I -- Fundamental Research, EPA-600/2-76-152a, NTIS-PB-256-320/AS, June 1976, (as cited in Reference 3-1, Section 4).

3-18 Shaw, J.T. and Thomas, A.C., "Oxides of Nitrogen in Relation to the Combustion of Coal," presented at the 7th International Conference on Coal Science, Prague, June 1968 (as cited in Reference 3-1, Section 4).

3-19 Pershing, D.W., et al., "Influence of Design Variables on the Production of Thermal and Fuel NO from Residual Oil and Coal Combustion," AIChE Symposium Series, No. 148, Vol. 71, pp. 19 to 29, 1975 (as cited in Reference 3-1, Section 4).

3-20 Thompson, R.E. and McElroy, M.W., "Effectiveness of Gas Recirculation and Staged Combustion in Reducing $NO_x$ in a 560-MW Coal-Fired Boiler," EPRI FP-257, NTIS-PB-260-582, September 1976 (as cited in Reference 3-1, Section 4).

3-21 Sorofim, A.F., et al., "Mechanisms and Kinetics of $NO_x$ Formation: Recent Developments," presented at the 65th Annual AIChE Meeting, Chicago, November 1976 (as cited in Reference 3-1, Section 4).

3-22 Martin, G.B. and Berkau, E.E., "An Investigation of the Conversion of Various Fuel Nitrogen Compounds to Nitrogen Oxides in Oil Combustion," presented at the 70th National AIChE Meeting, Atlantic City, August 1971 (as cited in Reference 3-1, Section 4).

3-23 Hablet, W.W. and Howell, B.M., "Control of $NO_x$ Formation in Tangentially Coal-Fired Steam Generators," In: Proceedings of the NO Control Technology Seminar, EPRI SR-39, NTIS-PB-253-661, February 1976 (as cited in Reference 3-1, Section 4).

3-24 "Air Quality and Stationary Source Emission Control," U.S. Senate, Committee on Public Works, Serial No. 94-4, March 1975 (as cited in Reference 3-1, Section 4).

3-25 Pohl, J.H. and Sarofim, A.F., "Fate of Coal Nitrogen During Pyrolysis and Oxidation," In: Proceedings of the Stationary Source Combustion Symposium; Volume I -- Fundamental Research, EPA-600/2-76-152a, NTIS-PB-256-320/AS, June 1976 (as cited in Reference 3-1, Section 4).

3-26 Heap, M.P., et al., "The Optimization of Burner Design Parameters to Control $NO_x$ Formation in Pulverized Coal and Heavy Oil Flames," In: Proceedings of the Stationary Source Combustion Symposium; Volume II -- Fuels and Process Research and Development, EPA-600/2-76-152b, NTIS-PB 256 321/AS, June 1976 Reference 3-1, Section 4).

3-27 Pohl, J.H. and Sarofim, A.F., "Devolatilization and Oxidation of Coal Nitrogen," presented at the 16th Sympsoium (International) on Combustion, Cambridge, Massachusetts, August 1976 (as cited in Reference 3-1, Section 4).

3-28 Blair, D.W., et al., "Devolatilization and Pyrolysis of Fuel Nitrogen from Single Coal Particle Combustion," 16th Symposium (International) on Combustion, Cambridge, Massachusetts, August 1976 (as cited in Reference 3-1, Section 4).

3-29 Brown, R.A., et al., "Investigation of Staging Parameters for $NO_x$ Control in Both Wall and Tangentially Coal-fired Boilers," In: Proceedings of the Second Stationary Source Combustion Symposium: Volume III, New Orleans, EPA-600/7-77-073c, NTIS-PB-271-757/AS, July 1977 (as cited in Reference 3-1, Section 4).

3-30 Pershing, D.W., "Nitrogen Oxide Formation in Pulverized Coal Flames," Ph.D, Dissertation, University of Arizona, 1976 (as cited in Reference 3-1, Section 4).

3-31 Axworthy, A.E., Jr., "Chemistry and Kinetics of Fuel Nitrogen Conversion to Nitric Oxide," AIChE Symposium Series, No. 148, Vol. 71, pp. 43 to 50, 1975 (as cited in Reference 3-1, Section 4).

3-32 Axworthy, A.E., et al., "Chemical Reactions in the Conversion of Fuel Nitrogen to $NO_x$," In: Proceedings of the Stationary Source Combustion Symposium, Volume I, EPA-600/2-76-152a, NTIS-PB-256-320/AS, June 1976 (as cited in Reference 3-1, Section 4).

3-33 Pershing, D.W. and Wendt, J.O.L., "The Effect of Coal Combustion on Thermal and Fuel $NO_x$ Production from Pulverized Coal Combustion," presented at Central States Section, The Combustion Institute, Columbus, Ohio, April 1976 (as cited in Reference 3-1, Section 4).

3-34 Habelt, W.W. and B.M. Howell, "Control of NO Formation in Tangentially Coal-Fired Steam Generators," In: Proceedings of the $NO_x$ Control Technology Seminar, EPRI SR-39, February 1976.

3-35 Barr, W.H., and D.E. James, "Nitric Oxide Control - A Program of Significant Accomplishments," ASME 72-WA/Pwr-13.

3-36 Barr, W.H., et al., "Retrofit of Large Utility Boilers for Nitric Oxide Emissions Reduction - Experience and Status Report."

3-37 Crawford, A.R., et al., "Field Testing: Application of Combustion Modifications to Control $NO_x$ Emissions from Utility Boilers," Exxon Research and Engineering Co., EPA-650/2-74-066, June 1974.

3-38 Crawford, A.R., et al., "The Effect of Combustion Modification on Pollutants and Equipment Performance of Power Generation Equipment," Exxon Research and Engineering Co., EPA-600/2-76-152c, prepared for the Stationary Source Combustion Symposium, September 24-26, 1975.

3-39 Blakeslee, C.E., and H.E. Burbach, "Controlling $NO_x$ Emissions from Steam Generators," C.E. Inc., APCA 72-75, 65th Annual Meeting of the Air Pollution Control Association, June 18-22, 1972.

3-40 Norton, D.M., et al., "Status of Oil-Fired $NO_x$ Control Technology," In: Proceedings of the $NO_x$ Control Technology Seminar, EPRI SR-39, NTIS-PB 253 661, February 1976 (as cited in Reference 3-1, Section 4).

3-41 Campobenedetto, E.J., Babcock & Wilcock Co., letter to Acurex Corp., November 15, 1977 (as cited in Reference 3-1, Section 4).

3-42 Durrant, O.W., "Pulverized Coal -- New Requirements and Challenges," presented to ISA Power Instrumentation Symposium, Houston, Texas, May 1975 (as cited in Reference 3-1, Section 4).

3-43 Vatsky, J., "Attaining Low $NO_x$ Emissions by Combining Low Emission Burners and Off-Stoichiometric Firing," presented at the 70th Annual AIChE Meeting, New York, November 1977 (as cited in Reference 3-1, Section 4).

3-44 Rawdon, A.H. and Johnson, S.A., "Control of $NO_x$ Emissions from Power Boilers," presented at Annual Meeting of the Institute of Fuel, Adelaide, Australia, November 1974 (as cited in Reference 3-1, Section 4).

3-45 Tidona, R.J., W.A. Carter, and H.J. Buening, (KVB) "Application of Advanced Combustion Modifications to Industrial Process Equipment -- Process Heater Tests" (Preliminary draft report prepared for Office of Research and Development, U.S. Environmental Protection Agency.) Research Triangle Park, North Carolina. EPA Contract No. 68-02-2645. November 1981.

3-46 Campobenedetto, E.J., "The Dual Register Pulverized Coal Burner -- Field Test Results," presented to Engineering Foundation Conference on Clean Combustion of Coal, New Hampshire, August 1977 (as cited in Reference 3-1, Section 4).

3-47 Barr, W.H., et al., "Modifying Large Boilers to Reduce Nitric Oxide Emissions," Chemical Engineering Progress, Vol. 73, pp. 59 to 68, July 1977 (as cited in Reference 3-1, Section 4).

3-48 U.S. Environmental Protection Agency. Control Techniques for Nitrogen Oxides Emissions from Stationary Sources -- Second Edition. (Prepared for U.S. Environmental Protection Agency.) Research Triangle Park, N.C. Publication No. EPA-450/1-78-001. January 1978. pp. 3-19 (as cited in Reference 3-1, Section 4).

3-49 Brown, R.A., H.B. Mason, and R.J. Schrieber, "Systems Analysis Requirements for Nitrogen Oxide Control of Stationary Sources," Environmental Protection Technology Series EPA-650/2-74-091, September 1974.

3-50 U.S. Environmental Protection Agency, "Draft - $NO_x$ SIP Preparation Manual Volume II - Support Sections," Office of Air Quality Planning and Standards, Research Triangle Park, N.C., April, 1976.

3-51 Bell, A.W., et al., "Nitric Oxide Reduction by Controlled Combustion Processes," KVB, Inc., Western States Section/Combustion Institute, April 20-21, 1970 (as cited in Reference 3-1, Section 4).

3-52 Crawford, A.R., E.H. Manny and W. Bartok, "Field Testing: Application of Combustion Modifications to Power Generating Combustion Sources," In: Proceedings of the Second Stationary Source Combustion Symposium, Volume II, Utility and Large Industrial Boilers, EPA-600/7-77-073b.

3-53 Ando, J. and T. Heiichiro, "$NO_x$ Abatement for Stationary Sources in Japan," Environmental Protection Technology Series, EPA-600/2-76-013b, January 1976.

3-54 Shoffstall, D.R., "Burner Design Criteria for Control of Pollutant Emissions from Natural Gas Flames," Institute of Gas Technology, EPA-600/2-76-152b, June 1976.

3-55 Koppang, R.R., "A Status Report on the Commercialization and Recent Development History of the TRW Low $NO_x$ Burner," TRW Energy Systems Group.

3-56 Tsuji, S., et al., "Control Technique for Nitric Oxide - Development of New Combustion Methods," IHI Engineering Review, Vol. 6, No. 2.

3-57 Ando, J., et al., "$NO_x$ Abatement for Stationary Sources in Japan," August 1976 (Preliminary Draft).

3-58 Heap, M.P., et al., "The Optimization of Burner Design Parameters to Control $NO_x$ Formation in Pulverized Coal and Heavy Oil Flames," In: Proceedings of the Stationary Source Combustion Symposium, EPA-600/2-76-152b, June 1976.

3-59 Barsin, J.A., "Pulverized Coal Firing $NO_x$ Control," In: Proceedings: Second $NO_x$ Control Technology Seminar, Electric Power Research Institute, Report No. FP-1109-SR, Palo Alto, California, July 1979 (as cited in Reference 3-1, Section 4).

3-60 Peduto, E.F., R.R. Hall, and G. Tucker, "Characterization of the $NO_x$ and $SO_2$ Control Performances: Southern Indiana Gas and Electric Co., A.B. Brown Unit No. 1, Volume 1 -- Program Results," Prepared for U.S. Environmental Ptoection Agency, Washington, D.C., EPA Contract No. 68-02-3168, March 1982.

3-61 Vatsky, J., "Experience in Reducing $NO_x$ Emissions on Operating Steam Generators," In: Proceedings: Second $NO_x$ Control Technology Seminar, Electric Power Research Institute, Report No. FP-1109-SR, Palo Alto, CA, July 1979 (as cited in Reference 3-1, Section 4).

3-62 "$NO_x$ Control Review," Vol. 2, No. 4, EPA Industrial Environmental Research Laboratory, RTP, North Carolina, Fall 1977 (as cited in Reference 3-1, Section 4).

3-63 Stavern, D.V., "The Coen Low Excess Air Burner," presented at the $NO_x$ Control Technology Workshop, Pacific Grove, California, October 1977 (as cited in Reference 3-1, Section 4).

3-64 Vatsky, J., "Larger Burners and Low $NO_x$," Heat Engineering, Vol. 49, No. 2, pp. 17-25, April-June 1979 (as cited in Reference 3-1, Section 4).

3-65 Martin, G.B., "Field Evaluation of Low $NO_x$ Coal Burners on Industrial and Utility Boilers," In: Proceedings of the Third Stationary Source Combustion Symposium, Volume I, EPA-600/7-79-050a, February 1979 (as cited in Reference 3-1, Section 4).

3-66 Johnson, S.A., et al., "The Primary Combustion Furnace System -- An Advanced Low-$NO_x$ Concept for Pulverized Coal Combustion," In: Proceedings: Second $NO_x$ Control Technology Seminar, Electric Power Research Institute, Report No. FP-1109-SR, Palo Alto, California, July 1979.

3-67 Whitaker, R., "Trade-offs in $NO_x$ Control," EPRI Journal, January-February 1982, pp. 18-25.

3-68 Habelt, W.W. The Influence of the Coal Oxygen to Coal Nitrogen Ratio on $NO_x$ Formation. Presented at the 70th Annual AIChE Meeting. New York. November 13-17, 1977.

3-69 Ctvrtnicek, T.E., et al., "Evoluation of Low-Sulfur Western Coal Characteristics, Utilization and Combustion Experience," Monsanto Research Corp., EPA-650/2-75-046, May 1975.

3-70 Martin, G.B., "Evaluation of $NO_x$ Emission Characteristics of Alcohol Fuels in Stationary Combustion Systems," Presented at Joint Meeting, Western and Central States Sections, The Combustion Institute, April 21 and 22, 1975, San Antonio, Texas.

3-71 Hall, R.E., "The Effect of Water/Residual Oil Emulsions on Air Pollutant Emissions and Efficiency of Commercial Boilers," ASME 75-WA/APC-1, July 14, 1975.

3-72 Martin, G.B., "Environmental Considerations in the Use of Alternate Clean Fuels in Stationary Combustion Processes."

3-73 Martin, G.B., D.W. Pershing, E.E. Berkau, "Effects of Fuel Additives on Air Pollutant Emissions from Distillate Oil-Fired Furnaces," EPA, Office of Air Programs, AP-87, June 1971.

3-74 Shaw, H., "Reduction of Nitrogen Oxide Emissions from a Gas Turbine Combustor by Fuel Modifications," ASME Transactions, Journal of Engineering for Power, 95, 4, October 1973.

3-75 Altwicker, E.R., et al., "Pollutants from Fuel Oil Combustion and the Effects of Additives," Paper No. 71-14, 64th Annual APCA Meeting, Atlantic City, N.J., June 1971.

3-76 Barrett, R.E., et al., "Field Investigation of Emissions from Combustion Equipment for Space Heating," EPA-R2-73-084a, June 1973.

3-77 Frey, D.J., "De-Ashed Coal Combustion Study," Combustion Engineering, Inc., October 1964.

3-78 Energy Research and Development Agency, "Proceedings of the Fourth International Conference on Fluidized Bed Combustion," McLean, VA., December 1975.

3-79 Jonke, A.A., et al., "Pollution Control Capabilities of Fluidized Bed Combustion," AIChE Symposium Series No. 126, Vol. 68, 1972.

3-80 Chronowski, R.A., and B. Molayem, "$NO_x$ Emissions from Atmopsheric Fluidized-Bed Boilers," ASME-75-PWR-4, October 1975.

3-81 Pfefferle, W.C., et al., "CATATHERMAL Combustion: A New Process for Low-Emissions Fuel Conversion," presented at the 1975 ASME Winter Annual Meeting, Houston, Texas, ASME Paper No. 75-WA/FU-1.

3-82 Kesselring, J.P., et al., "Catalytic Oxidation of Fuels for $NO_x$ Control for Area Sources," EPA Report, EPA-600/2-76-037, February 1976.

3-83 DeCorso, S.M., et al., "Catalysts for Gas Turbine Combustors - Experimental Test Results," paper presented at ASME Gas Turbine Conference and Products Show, New Orleans, March 1976, ASME Paper #76-GT-4.

3-84 Gerstin, R.A., "A Technical and Economic Overview of the Benefits of Repowering," paper presented at the Gas Turbine Conference and Products Show, Houston, Texas, March 2-6, 1975, ASME Paper #75-GT-16.

3-85 Ahuja, A., "Repowering Pays Off for Utility and Industrial Plants," Power Engineering, pp. 50-54, July 1976.

3-86 Stambler, I., "Repowering Gives Glendale Extra 75 MW and Lower Rates," Gas Turbine World, September 1977.

3-87 Robson, F.L., and A.J. Giramonti, "The Use of Combined-Cycle Power Systems in Nonpolluting Central Stations," JAPCA, Vol. 22, pp. 177-180, 1972.

3-88 Jones, G.D. and K.L. Johnson, "Technology Assessment Report for Industrial Boiler Applications: $NO_x$ Flue Gas Treatment," EPA-600/7-79-178g, December 1979.

3-89 Maxwell, J.D. and L.R. Humphries, "Evaluation of the Advanced Low-$NO_x$ Burner, Exxon, and Hitachi Zosen $DeNO_x$ Processes," EPA-600/7-81-120, TVA/OP/EDT-81-28, July 1981.

3-90 Ando, J., "$NO_x$ Abatement for Stationary Sources in Japan," EPA-600/7-79-205, August 1979.

3-91 Faucett, H.L., J.D. Maxwell, and T.A. Burnett, "Technical Assessment of $NO_x$ Removal Processes for Utility Application," TVA Bulletin Y-120, EPA-600/7-77-127 (NTIS PB-276-637/6WP), EPRI FP-1253, 1977.

3-92 Jones, G.D. "Selective Catalytic Reduction and $NO_x$ Control in Japan, A Status Report," EPA-600/7-81-030, January 1981.

3-93 Trexler, E.C. "DOE's Electron Bream Irradiation Developmental Program," prepared for Seventh Symposium on Flue Gas Desulfurization, May 17-20, 1982, p. 11.

3-94 Reference 3-89, p. 11.

3-95 "Nitric Acid from Ammonia," Hoechst-Uhde Corp. brochure (FWC 11 619), Englewood Cliffs, N.J.

3-96 Mayland, B.J., "The CDL/VITOK Nitrogen Oxides Abatement Process," Chenoweth Development Laboratory, Louisville, KY.

3-97 "New System Knocks $NO_x$ Out of Nitric," Chemical Week, September 3, 1975, pp. 37-38.

3-98 "$NO_x$ Removal System Now Available," Wet Scrubber Newsletter, September 30, 1973, pp. 3-4.

3-99 Mayland, B.J., "Application of the CDL/VITOK Nitrogen Oxide Abatement Process," presented at Sulfur and Nitrogen Symposium, Salford, Lancashire, U.K., April 1976.

3-100 Mayland, B.J., and R.C. Heinze, "Continuous Catalytic Absorption for $NO_x$ Emission Control," Chemical Engineering Process, Vol. 6, May 1973, pp. 75-76.

SECTION 4

# LARGE FOSSIL FUEL COMBUSTION PROCESSES

Fossil fuel combustion by utilities and industry accounted for about 85 percent of $NO_x$ emissions from stationary sources in 1980 (see Section 2). This combustion occurred principally in boilers and large internal combustion (IC) engines. The large boiler category encompasses application to utility and industrial power generation and industrial process steam generation. Large IC engines are used predominantly for power generation and for pipeline pumping and encompass large bore reciprocating engines as well as continuous combustion gas turbine engines. This section summarizes the effectiveness, cost, user experience, and energy and environmental impacts of the implementation of $NO_x$ controls on these equipment categories.

## 4.1 UTILITY BOILERS

Most of the nation's electricity is generated in large fossil-fueled central station power plants, which primarily consist of high-pressure watertube boilers in the 100 to 1300 MW* range serving turbine-generators. Firing capacities of individual burners in utility boilers commonly have thermal inputs as high as 29-58 $MW_t^*$ (100-200 x $10^6$ Btu/hr). A 1000 MW* opposed wall-fired unit may require as many as 60 separate burners.

Although there are differences among utility boiler designs in furnace volume, operating pressure, and configuration of internal heating transfer surface, the principal distinction is firing mode. Firing mode is characterized by the type of firing equipment, the fuel handling system, and the placement of the burners on the furnace walls (see Section 2.3.1).

The total $NO_x$ emitted in 1980 by the electric utility industry was 6.4 Tg (7.1 x $10^6$ tons) or 58 percent of the total stationary source emissions of $NO_x$. Coal-fired boilers accounted for approximately 81 percent of the total utility emissions. A more detailed emission breakdown is presented in Section 2. Ranges of uncontrolled $NO_x$ emissions for three principal types of coal-fired boilers are presented in Figure 4-1. These emission rates essentially represent baseline

*Utility boilers are commonly described in terms of electrical output rating rather than in terms of thermal input. Burners are commonly described in terms of thermal input to the boiler as noted by the subscript "t". This convention will be used throughout Section 4.1 unless otherwise noted in the text.

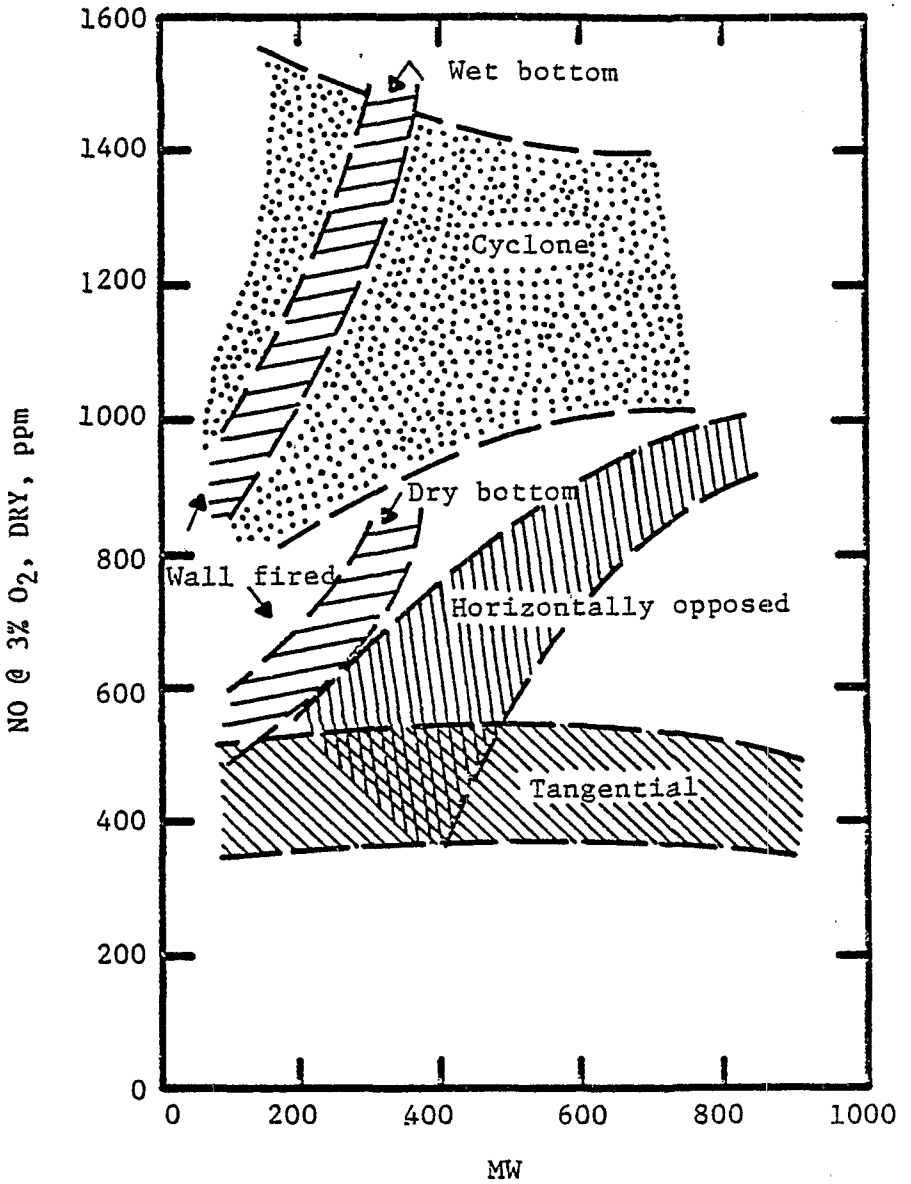


Figure 4-1. Baseline $NO_x$ emissions - coal-fired utility boilers (Reference 4-1).

emissions from units designed prior to the early 1970s, without the combustion modification controls often designed into later units. As shown, cyclone-fired boilers typically have the highest uncontrolled emission rates, tangentially-fired units the lowest, with one wall- and opposed wall-fired units at an intermediate level. The old wet bottom (slag tap) units are exceptions and have very high $NO_x$ emissions. All of these boilers fire pulverized coal except for the cyclone units which fire crushed coal. Very few stokers are used in utility applications.

### 4.1.1 Control Techniques

Techniques for controlling $NO_x$ emissions from utility boilers fall into two broad classes; combustion modifications and flue gas treatment (FGT). Considerable experience exists in the U.S. with various combustion modification controls. Flue gas treatment techniques, on the other hand, have primarily been developed and applied in Japan, with some testing performed in the U.S. This section discusses the status of application of these techniques to utility boilers, the $NO_x$ control performance achieved, and the process impacts associated with their application.

#### 4.1.1.1 Combustion Modifications

The general concept of combustion modification as potential $NO_x$ control techniques for stationary sources was discussed in Section 3.1. These techniques have been developed and refined in numerous laboratory test installations and in many successful field applications to commercial utility boilers.

Utility boilers, due to their importance as $NO_x$ sources and their control flexibility, are the most extensively modified stationary equipment type. The selection and implementation of effective $NO_x$ controls for a specific utility boiler are generally dependent on several variables. These include the furnace characteristics (i.e., geometry and operational flexibility), fuel/air handling systems and automatic controls, and the potential for operational problems which may result from combustion modifications. The following discussion is, therefore, not intended to provide application guidelines, but rather to give a broad overview and evaluation of tested procedures.

Combustion modifications which have been applied or proposed for utility boilers include:

- Low Excess Air Firing (LEA);
- Off Stoichiometric Combustion (OSC) or Staged Combustion (SC), including Biased Burner Firing (BBF), Burners Out of Service (BOOS), and Overfire Air (OFA);
- Flue Gas Recirculation (FGR);
- First Generation Low $NO_x$ Burners (LNB);
- Enlarged Furnace Design/Reduced Firing Rate;

- Reduced Air Preheat (RAP);
- Water Injection (WI); and
- Advanced Burner/Furnace Designs.

Some of these techniques, such as enlarged furnace designs, first generation low $NO_x$ burners, OFA, and LEA, have become a standard part of new unit design. Techniques such as LEA, FGR, and various methods of OSC have also been extensively applied to existing units. Other techniques have not gained wide acceptance because of adverse impacts on unit efficiency or capacity. These include reduced firing rate, RAP, and WI. Also, various OSC techniques may result in reduced unit capacity in some retrofit applications. Advanced burner and furnace designs represent techniques which are still under development but may become available in the next few years.

Retrofit $NO_x$ control implementation by combustion modification usually proceeds in several stages depending on the emission limits to be reached. First, fine tuning of combustion conditions by lowering excess air and adjusting the burner settings and air distribution is employed. If $NO_x$ emission levels are still too high, the minor modifications, such as BBF or BOOS are implemented. If further reductions of $NO_x$ are necessary, these minor modifications are followed by the more major retrofits, including OFA ports, FGR systems, and new burners.

The feasibility, effectiveness, and method of applying the modifications within each stage of control depend heavily on the fuel and firing type. For example, testing has shown that FGR does not significantly reduce fuel $NO_x$, so this technique is usually not cost-effective for $NO_x$ control on coal-fired units. Also, such techniques as BOOS or OFA are implemented differently on wall-fired and tangentially-fired units due to burner configuration and hardware differences. Tables 4-1 through 4-8 summarize available test data by fuel and firing type for various combustion modifications applied to utility boilers. These data were obtained from Reference 4-2 and the reader is referred to this reference for further information about these tests.

The practical limits on combustion modifications are based initially on three subjective criteria: emission of other pollutants (i.e., CO, smoke, and carbon in fly ash), onset of slagging or fouling, and incipience of flame instability at the burner.

The remainder of this section describes recent combustion modification experience on coal-, oil-, and gas-fired boilers. The material in this section was taken from Reference 4-3. The reader is referred to this document for additional information and for the original sources of this material.

TABLE 4-1. AVERAGE $NO_x$ REDUCTION WITH LOW EXCESS AIR FIRING (LEA)[a] (Reference 4-2)

| Equipment Type | Fuel | Number of Boilers Tested | Baseline | | Low Excess Air (LEA) | | Average $NO_x$ Reduction (percent) | Maximum $NO_x$ Reduction Reported (percent) |
|---|---|---|---|---|---|---|---|---|
| | | | Stoichiometry to Active Burners (percent) | $NO_x$ Emissions (ppm dry @ 3% $O_2$) | Stoichiometry to Active Burners (percent) | NO Emissions (ppm dry @ 3% $O_2$) | | |
| Tangential | Coal | 11 | 124 | 459 | 116 | 373 | 19 | 42 |
| | Oil | -- | -- | -- | -- | -- | -- | -- |
| | Nat Gas | 1 | 117 | 340 | 113 | 245 | 28 | 28 |
| Opposed Wall | Coal | 5 | 126 | 746 | 118 | 660 | 12 | 23 |
| | Oil | 4 | 120 | 357 | 113 | 290 | 19 | 30 |
| | Nat Gas | 6 | 115 | 717 | 110 | 600 | 16 | 33 |
| Single Wall | Coal | 7 (2) | 123 (134)[b] | 624 (1338) | 114 (118) | 522 (1325) | 16 (1) | 25 (3) |
| | Oil | 4 | 120 | 409 | 112 | 315 | 23 | 26 |
| | Nat Gas | 3 (1) | 117 (124) | 418 (992) | 108 (112) | 356 (931) | 15 (6) | 15 (6) |
| All Boilers | Coal | 23 | 124 | 609 | 116 | 522 | 16 | 30 |
| | Oil | 8 | 120 | 383 | 115 | 302 | 21 | 28 |
| | Nat Gas | 10 | 116 | 492 | 110 | 400 | 20 | 25 |
| | All Fuels | 41 | 120 | 495 | 114 | 408 | 19 | 28 |

[a]Boiler load at or above 80 percent MCR. For individual tests, corresponding baseline and controlled loads were nearly identical.
[b]Numbers in parentheses refer to boilers originally designed for coal firing with wet bottom furnaces.

TABLE 4-2. AVERAGE $NO_x$ REDUCTION WITH BURNER OUT OF SERVICE (BOOS)[a] (Reference 4-2)

| Equipment Type | Fuel | Number of Boilers Tested | Baseline | | | Burners Out of Service (BOOS) | | | Average $NO_x$ Reduction (percent) | Maximum $NO_x$ Reduction Reported (percent) |
|---|---|---|---|---|---|---|---|---|---|---|
| | | | No. of Burners Firing | Stoichiometry to Active Burners (percent) | $NO_x$ Emissions (ppm dry @ 3% $O_2$) | Percent Burners on Air Only | Stoichiometry to Active Burners (percent) | $NO_x$ Emissions (ppm dry @ 3% $O_2$) | | |
| Tangential | Coal | 7 | 32 (16-56)[b] | 121 | 462 | 17 | 98 | 293 | 37 | 56 |
| | Oil | -- | -- | -- | -- | -- | -- | -- | -- | -- |
| | Nat Gas | 1 | 8 | 112 | 146 | NA | 86 | 146 | 0 | 0 |
| Opposed Wall | Coal | 4 | 40 (24-54)[b] | 122 | 670 | 16 | 102 | 522 | 22 | 46 |
| | Oil | 1 | 24 | 107 | 442 | 33 | 73 | 292 | 34 | 34 |
| | Nat Gas | 4 | 26[b] (16-36)[b] | 115 | 674 | 28 | 84 | 290 | 57 | 61 |
| Single Wall | Coal | 8 (1) | 16 (24)[c] | 123 (134)[c] | 618 (1196)[c] | 19 (33)[c] | 97 (89)[c] | 412 (577)[c] | 33 (52)[c] | 48 (52)[c] |
| | Oil | 3 | 16 (12-24)[b] | 119 | 425 | 18 | 95 | 256 | 40 | 48 |
| | Nat Gas | 3 | 16 (12-16)[b] | 117 | 418 | 22 | 89 | 214 | 49 | 69 |
| All Boilers | Coal | 19 | 28 (16-56)[b] | 122 | 583 | 17 | 99 | 409 | 31 | 50 |
| | Oil | 4 | 20 (12-24)[b] | 113 | 433 | 25 | 84 | 274 | 37 | 41 |
| | Nat Gas | 8 | 16 (8-36)[b] | 115 | 412 | 25 | 86 | 217 | 35 | 43 |
| | All Fuels | 31 | 20 (8-56)[b] | 117 | 476 | 22 | 90 | 300 | 34 | 45 |

[a]Boiler load at or above 80 percent MCR. For individual tests, corresponding baseline and controlled loads were nearly identical.
[b]Range in number of burners firing
[c]Numbers in parentheses refer to boilers originally designed for coal firing with wet bottom furnaces.

TABLE 4-3. AVERAGE $NO_x$ REDUCTION WITH OVERFIRE AIR (OFA)[a] (Reference 4-2)

| Equipment Type | Fuel | Number of Boilers Tested | Baseline | | Overfire Air (OFA) | | | Average $NO_x$ Reduction (percent) | Maximum $NO_x$ Reduction Reported (percent) |
|---|---|---|---|---|---|---|---|---|---|
| | | | Stoichiometry to Active Burners (percent) | $NO_x$ Emissions (ppm dry @ 3% $O_2$) | Stoichiometry to Active Burners (percent) | Furnace Stoichiometry (percent) | $NO_x$ Emissions (ppm dry @ 3% $O_2$) | | |
| Tangential | Coal | 6 | 129 | 454 | 105 | 122 | 311 | 31 | 41 |
| | Oil | -- | -- | -- | -- | -- | -- | -- | -- |
| | Nat Gas | -- | -- | -- | -- | -- | -- | -- | -- |
| Opposed Wall | Coal | -- | -- | -- | -- | -- | -- | -- | -- |
| | Oil | 5 | 118 | 376 | 96 | 118 | 287 | 24 | 30 |
| | Nat Gas | 2 | 114 | 928 | 99 | 112 | 378 | 59 | 66 |
| Single Wall | Coal | -- | -- | -- | -- | -- | -- | -- | -- |
| | Oil | -- | -- | -- | -- | -- | -- | -- | -- |
| | Nat Gas | -- | -- | -- | -- | -- | -- | -- | -- |

[a]Boiler load at or above 80 percent MCR. For individual tests, corresponding baseline and controlled loads were nearly identical.

TABLE 4-4. AVERAGE $NO_x$ REDUCTION WITH FLUE GAS RECIRCULATION (FGR)[a] (Reference 4-2)

| Equipment Type | Fuel | Number of Boilers Tested | Baseline | | Overfire Air (OFA) | | | Average $NO_x$ Reduction (percent) | Maximum $NO_x$ Reduction Reported (percent) |
|---|---|---|---|---|---|---|---|---|---|
| | | | Stoichiometry to Active Burners (percent) | $NO_x$ Emissions (ppm dry @ 3% $O_2$) | Stoichiometry to Active Burners (percent) | FGR (percent) | $NO_x$ Emissions (ppm dry @ 3% $O_2$) | | |
| Tangential | Coal | -- | -- | -- | -- | -- | -- | -- | -- |
| | Oil | -- | -- | -- | -- | -- | -- | -- | -- |
| | Nat Gas | 1 | 117 | 340 | 115 | 23 | 135 | 60 | 60 |
| Opposed Wall | Coal | 1 | 128 | 855 | 127 | 15 | 735 | 17 | 17 |
| | Oil | 1 | 122 | 304 | 126 | 11 | 263 | 13 | 13 |
| | Nat Gas | -- | -- | -- | -- | -- | -- | -- | -- |
| Single Wall | Coal | -- | -- | -- | -- | -- | -- | -- | -- |
| | Oil | -- | -- | -- | -- | -- | -- | -- | -- |
| | Nat Gas | 1 | 106 | 470 | 107 | 11 | 307 | 35 | 35 |

[a]Boiler load at or above 80 percent MCR. For individual tests, corresponding baseline and controlled loads were nearly identical.

TABLE 4-5. AVERAGE $NO_x$ REDUCTION WITH REDUCED FIRING RATE[a] (Reference 4-2)

| Equipment Type | Fuel | Number of Boilers Tested | Baseline (80% MCR or Above) | | | Reduced Load | | | Average $NO_x$ Reduction (percent) | Maximum $NO_x$ Reduction Reported (percent) |
|---|---|---|---|---|---|---|---|---|---|---|
| | | | Firing Rate (percent MCR) | Stoichiometry to Active Burners (percent) | $NO_x$ Emissions (ppm dry @ 3% $O_2$) | Firing Rate (percent MCR) | Stoichiometry to Active Burners (percent) | $NO_x$ Emissions (ppm dry @ 3% $O_2$) | | |
| Tangential | Coal | 7 | 93 | 112 | 462 | 64 | 127 | 408 | 12 | 25 |
| | Oil | -- | -- | -- | -- | -- | -- | -- | -- | -- |
| | Nat Gas | 1 | 100 | 117 | 340 | 75 | 135 | 332 | 2 | 32 |
| Opposed Wall | Coal | 4 | 93 | 131 | 825 | 70 | 136 | 758 | 8 | 18 |
| | Oil | 4 | 98 | 118 | 362 | 61 | 121 | 249 | 31 | 48 |
| | Nat Gas | 5 | 98 | 115 | 651 | 57 | 115 | 269 | 59 | 64 |
| Single Wall | Coal | 2 (2) | 92 (90) | 125 (133)[a] | 651 (1338) | 67 (54) | 130 (138) | 496 (990) | 24 (26) | 25 (33) |
| | Oil | 3 | 98 | 119 | 425 | 53 | 119 | 296 | 30 | 45 |
| | Nat Gas | 2 (1) | 97 (98) | 118 (115) | 442 (992) | 35 (59) | 117 (131) | 125 (522) | 72 (47) | 82 (47) |
| All Boilers | Coal | 13 | 93 | 126 | 646 | 67 | 131 | 554 | 14 | 23 |
| | Oil | 7 | 98 | 119 | 393 | 57 | 120 | 272 | 31 | 47 |
| | Nat Gas | 8 | 99 | 117 | 478 | 55 | 122 | 242 | 44 | 59 |
| | All Fuels | 28 | 97 | 120 | 506 | 60 | 124 | 356 | 30 | 43 |

[a]Numbers in parentheses refer to boilers originally designed for coal firing with wet bottom furnaces.

TABLE 4-6. AVERAGE $NO_x$ REDUCTION WITH OFF STOICHIOMETRIC COMBUSTION AND FLUE GAS RECIRCULATION (OSC AND FGR)[a] (Reference 4-2)

| Equipment Type | Fuel | Number of Boilers Tested | Baseline | | OSC and FGR | | | | Average $NO_x$ Reduction (percent) | Maximum $NO_x$ Reduction Reported (percent) |
|---|---|---|---|---|---|---|---|---|---|---|
| | | | Stoichiometry to Active Burners (percent) | $NO_x$ Emissions (ppm dry @ 3% $O_2$) | Type of OSC | Stoichiometry to Active Burners (percent) | FGR (percent) | $NO_x$ Emissions (ppm dry @ 3% $O_2$) | | |
| Tangential | Coal | -- | -- | -- | -- | -- | -- | -- | -- | -- |
| | Oil | -- | -- | -- | -- | -- | -- | -- | -- | -- |
| | Nat Gas | 1 | 117 | 340 | BOOS | 75 | 21 | 105 | 69 | 69 |
| Opposed Wall | Coal | 1 | 128 | 781 | BOOS | 99 | 19 | 453 | 42 | 42 |
| | Oil | 1 | 122 | 304 | OFA | 97 | 11 | 247 | 19 | 19 |
| | Nat Gas | -- | -- | -- | -- | -- | -- | -- | -- | -- |
| Single Wall | Coal | -- | -- | -- | -- | -- | -- | -- | -- | -- |
| | Oil | 2 | 118 | 355 | BBF BOOS | 91 | 14 | 154 | 57 | 59 |
| | Nat Gas | 1 | 106 | 470 | BOOS | 75 | 12 | 115 | 76 | 76 |

[a]Boiler load at or above 80 percent MCR. For individual tests, corresponding baseline and controlled loads were nearly identical.

TABLE 4-7. AVERAGE $NO_x$ REDUCTION WITH REDUCED FIRING RATE AND OFF STOICHIOMETRIC COMBUSTION (Reference 4-2)

| Equipment Type | Fuel | Number of Boilers Tested | Baseline | | | Low Load and OSC | | | | Average $NO_x$ Reduction (percent) | Maximum $NO_x$ Reduction Reported (percent) |
|---|---|---|---|---|---|---|---|---|---|---|---|
| | | | Firing Rate (percent MCR) | Stoichiometry to Active Burners (percent) | $NO_x$ Emissions (ppm dry @ 3% $O_2$) | Firing Rate (percent MCR) | Type of OSC | Stoichiometry to Active Burners (percent) | $NO_x$ Emissions (ppm dry @ 3% $O_2$) | | |
| Tangential | Coal | 8 | 93 | 122 | 453 | 61 | BOOS OFA | 95 | 248 | 45 | 62 |
| | Oil | -- | -- | -- | -- | -- | -- | -- | -- | -- | -- |
| | Nat Gas | -- | -- | -- | -- | -- | -- | -- | -- | -- | -- |
| Horizontally Opposed Wall | Coal | 3 | 93 | 129 | 820 | 73 | BOOS | 102 | 634 | 23 | 32 |
| | Oil | 4 | 99 | 118 | 362 | 64 | BOOS OFA | 117 | 177 | 51 | 67 |
| | Nat Gas | 6 | 100 | 115 | 717 | 58 | BOOS OFA | 88 | 148 | 79 | 89 |
| Single Wall | Coal | 4 (2) | 90 | 124 (133)[a] | 663 (1338) | 73 (59) | BOOS | 99 (91) | 381 (887) | 43 (34) | 50 (55) |
| | Oil | 3 | 98 | 120 | 426 | 56 | BBF BOOS | 97 | 228 | 46 | 59 |
| | Nat Gas | 2 (1) | 97 (98) | 118 (125) | 442 (992) | 35 (71) | BBF BOOS | 93 (102) | 78 (641) | 82 (35) | 87 (35) |
| All Boilers | Coal | 15 | 92 | 125 | 645 | 69 | BOOS OFA | 99 | 421 | 37 | 48 |
| | Oil | 7 | 99 | 119 | 394 | 60 | BBF BOOS OFA | 107 | 202 | 49 | 63 |
| | Nat Gas | 8 | 99 | 117 | 579 | 31 | BOOS OFA | 91 | 113 | 80 | 88 |
| Fuels | All | 30 | 97 | 120 | 539 | 53 | BBF BOOS OFA | 99 | 245 | 55 | 66 |

[a]Numbers in parentheses refer to boilers originally designed for coal firing with wet bottom furnaces.

TABLE 4-8. AVERAGE $NO_x$ REDUCTION WITH LOAD REDUCTION, OFF STOICHIOMETRIC COMBUSTION AND FLUE GAS RECIRCULATION (Reference 4-2)

| Equipment Type | Fuel | Number of Boilers Tested | Baseline | | | Controlled/Low Load and OSC and FGR | | | | $NO_x$ Emissions (ppm dry @ 3% $O_2$) | Average $NO_x$ Reduction (percent) | Maximum $NO_x$ Reduction Reported (percent) |
|---|---|---|---|---|---|---|---|---|---|---|---|---|
| | | | Firing Rate (percent MCR) | Stoichiometry to Active Burners (percent) | $NO_x$ Emissions (ppm dry @ 3% $O_2$) | Firing Rate (percent MCR) | Type of OSC | Stoichiometry to Active Burners (percent) | FGR (percent) | | | |
| Tangential | Coal | -- | -- | -- | -- | -- | -- | -- | -- | -- | -- | -- |
| | Oil | -- | -- | -- | -- | -- | -- | -- | -- | -- | -- | -- |
| | Nat Gas | -- | -- | -- | -- | -- | -- | -- | -- | -- | -- | -- |
| Opposed Wall | Coal | -- | -- | -- | -- | -- | -- | -- | -- | -- | -- | -- |
| | Oil | 3 | 99 | 118 | 398 | 46 | BOOS OFA | 87 | 39 | 194 | 56 | 59 |
| | Nat Gas | 2 | 100 | 113 | 945 | 43 | BOOS OFA | 90 | 27 | 130 | 87 | 90 |
| Single Wall | Coal | -- | -- | -- | -- | -- | -- | -- | -- | -- | -- | -- |
| | Oil | 2 | 98 | 118 | 355 | 62 | BOOS | 92 | 30 | 152 | 57 | 57 |
| | Nat Gas | 2 | 100 | 110 | 421 | 65 | BOOS | 81 | 20 | 171 | 59 | 83 |
| All Boilers | Coal | -- | -- | -- | -- | -- | -- | -- | -- | -- | -- | -- |
| | Oil | 5 | 99 | 118 | 376 | 54 | BOOS OFA | 90 | 35 | 173 | 57 | 58 |
| | Nat Gas | 4 | 100 | 112 | 683 | 54 | BOOS OFA | 86 | 23 | 150 | 73 | 87 |
| | All Fuels | 9 | 100 | 115 | 530 | 54 | BOOS OFA | 88 | 29 | 162 | 66 | 73 |

Application to Coal-Fired Boilers

Currently the most commonly applied low $NO_x$ technique for coal-fired boilers is off stoichiometric or staged combustion through the introduction of overfire air (OFA). This technique has been used in both retrofit and new unit applications. Application of burners out of service (BOOS), an alternate staging technique with retrofit application, is limited because it is often accompanied by a 10 to 25 percent load reduction. Average $NO_x$ reductions of 30 to 50 percent from the levels shown in Figure 4-1 (controlled emissions of 210 to 300 ng/J, 0.5 to 0.7 lb/$10^6$ Btu) can be expected with either technique in dry bottom boilers. Flue gas recirculation (FGR) has been tested but was found to be a relatively ineffective control for coal firing, giving only about 15 percent $NO_x$ reductions. More recently, new low $NO_x$ burners (LNB) have been installed on some units and found to be at least as effective as OFA. In fact, new wall-fired units currently being brought online generally rely on LNB to meet the 1971 New Source Performance Standard (NSPS). The combination of OFA with LNB has resulted in 40 to 60 percent $NO_x$ reductions (controlled emissions of 170 to 260 ng/J, 0.4 to 0.6 lb/$10^6$ Btu).

There has been a steady improvement in combustion modification control technology over recent years. Current demonstrated technology is capable of 40 to 60 percent $NO_x$ reductions from the levels shown in Figure 4-1, easily meeting the 1971 NSPS of 300 ng/J (0.7 lb/$10^6$ Btu) and in most cases the 1979 revised standard of 210 to 260 ng/J (0.5 to 0.6 lb/$10^6$ Btu). Current R&D programs, such as the development and demonstration of the EPA advanced low $NO_x$ burner and the EPRI primary combustion furnace, should result in combustion modification techniques capable of meeting $NO_x$ emission levels of 86 to 130 ng/J (0.2 to 0.3 lb/$10^6$ Btu).

The effects of low $NO_x$ operation on coal-fired boilers are summarized in Table 4-9. The table describes experience obtained through field test programs on the several units listed. The major concerns regarding low $NO_x$ operation on coal-fired boilers have been the possible adverse effects on boiler efficiency, load capacity, water wall tube corrosion and slagging, carbon loss, heat absorption profile, and convective section tube and steam temperatures.

In most past experience with staged combustion, optimal excess air levels have been comparable to levels used under baseline conditions. In these cases the efficiency of the boiler remains unaffected if unburned carbon losses do not increase appreciably. However, in some cases when, due to nonuniform fuel air distribution or other causes, the excess air requirement increases under staged firing, a significant decrease in efficiency occurs. From Table 4-9, it is seen that efficiency decreases of up to 1 percent have been experienced. It is also seen that the same boiler

TABLE 4-9. EFFECT OF LOW $NO_x$ OPERATION ON COAL-FIRED BOILERS[a]
(Reference 4-3)

| Boiler | Low $NO_x$ Technique | Boiler Efficiency | Corrosion | Load Capacity | Carbon Loss in Flyash | Dust Loading | Part. Size Distribution | Other Effects, Comments |
|---|---|---|---|---|---|---|---|---|
| Tangential | | | | | | | | |
| Barry No. 2 | BOOS | Unaffected | Measured 75% increase, but within normal range | 20% derate | Slight increase | ~100% increase | -- | Minor changes in heat absorption profile SH attemperation increased by 70% |
| | OFA | Unaffected | Measured 70% increase, but within normal range | Unaffected | Slight increase | ~100% increase | | Minor changes in heat absorption profile SH attemperation increased over 200% |
| Columbia No. 1 | OFA | Unaffected | No change | Unaffected | Slight increase | -- | -- | Minor changes in heat absorption profile SH attemperation increased by 70% |
| Huntington Canyon No. 2 | OFA | Unaffected | Measured 25% decrease, but within normal range | Unaffected | Slight increase | -- | -- | Minor changes in heat absorption profile No SH attemperation required |
| Barry No. 4 | LEA, BOOS | Unaffected | No significant change | 20% or more derate with BOOS | ~50% average decrease | ~50% average increase | -- | |
| Navajo No. 2 | LEA, BOOS, OFA | Unaffected | No significant change | Unaffected | No change | ~40% average increase | No change | |
| Comanche No. 1 | OFA | Unaffected | No significant change | Unaffected | ~30% average decrease | ~20% average decrease | No significant change | |
| Kingston No. 6 | BBF | Unaffected | -- | Unaffected | Unaffected | Unaffected | Unaffected | |
| | BOOS | 0.5% average increase | -- | 20% derate | Unaffected | Unaffected | Unaffected | |
| Opposed Wall | | | | | | | | |
| Harllee Branch No. 3 | LEA, BOOS | 0.6% average decrease | Slight increase | Up to 17% derate with BOOS | ~130% average | ~10% average increase | -- | |
| Four Corners No. 4 | LEA, BOOS | 0.6% increase | No significant change | Up to 25% derate with BOOS | ~50% average decrease | ~15% average decrease | -- | |

TABLE 4-9. (Continued)

| Boiler | Low $NO_x$ Technique | Boiler Efficiency | Corrosion | Load Capacity | Carbon Loss in Flyash | Dust Loading | Part. Size Distribution | Other Effects, Comments |
|---|---|---|---|---|---|---|---|---|
| Hatfield No. 3 | BOOS | 0.3% decrease | -- | 10% derate | ~30% average increase | Unaffected | -- | No slagging or fouling. No significant increase in tube temperatures. |
| | FGR | 0.4% decrease in boiler efficiency. Some decrease in cycle efficiency due to RH. attemperation. | -- | Unaffected | ~120% average increase | Unaffected | -- | Stable flames and uniform combustion. Increase in RH attemperation. No significant increase in tube temperatures. |
| E.C. Gaston No. 1 | LNB, LEA, BOOS | 0.3% decrease on average (LNB baseline) | No significant increase | Up to 30% derate (LNB with BOOS) | ~130% average increase (LNB baseline) | ~15% average increase (LNB baseline) | Shift towards smaller particles (LNB, with or without BOOS) | Unit retrofitted with low $NO_x$ burners. Baseline, LEA and BOOS tests with LNB compared to baseline tests on sister boiler with no LNB. |
| Crist No. 7 | BOOS | Unaffected | Increase | Unaffected | Slight increase | Unaffected | Unaffected | |
| Single Wall | | | | | | | | |
| Widows Creek No. 5 (TVA Test) | BOOS | 1% decrease | Results of tests inconclusive | Unaffected | 30% increase | No significant increase | -- | |
| Widows Creek No. 5 (Exxon test) | LEA, BOOS | 1% average increase | No significant increase | Unaffected | 30% average decrease | 15% average decrease | -- | |
| Widows Creek No. 6 | LEA, BOOS | Unaffected | -- | Unaffected | 70% average increase | 20% average decrease | -- | |
| Mercer Station No. 1 (wet bottom) | LEA, Biased firing | Unaffected | No significant increase | Unaffected | 80% average increase | 10% average increase | No significant change | |
| Crist Station No. 6 | LEA, BOOS | 0.4% decrease | -- | Up to 15% derate | 60% increase | 50% increase | -- | |

[a] -- denotes this parameter was not investigated.

(Widows Creek No. 5) tested at a different time with BOOS showed an average increase in efficiency of 1 percent.

Many new boilers now come factory equipped with OFA ports. Older boilers can be retrofitted with OFA ports, or can operate with minimal hardware changes under BOOS firing. BOOS firing is normally accomplished by shutting off one or more pulverizers supplying coal to the upper burner levels. If the other pulverizers cannot handle the extra fuel to maintain a constant total fuel flow, boiler derating will be required. From Table 4-9 it is seen that boiler derating of 10 to 25 percent is not uncommon with BOOS firing.

The possibility of increased corrosion has been a major cause for concern with staged operation. Furnaces fired with certain Eastern U.S. bituminous coals with high sulfur contents may be susceptible to corrosion attack under reducing atmospheres. Local reducing atmosphere pockets may exist under staged combustion operation even when burner stoichiometry is slightly over 100 percent. The problem may be further aggravated by slagging as slag generally fuses at lower temperatures under reducing conditions. The sulfides in the molten slag may then readily attack tube walls. Still, as noted in Table 4-9, experience with most short-term tests has generally been that no significant acceleration in corrosion rates occurs under staged firing. Recent 12-month corrosion measurements by Exxon during low $NO_x$ firing in a 500 MW boiler showed significantly higher corrosion rates with low $NO_x$ operation (Reference 4-4). Nevertheless, the issue cannot be considered resolved until further results are available from long-term corrosion tests with measurements on units equipped with factory equipped $NO_x$ controls. Insofar as slagging is concerned, short-term tests performed to date generally indicate no significant increase in slagging or fouling of tubes under staged combustion.

Increased carbon loss in fly ash may occur with staged firing if complete burnout of the carbon particles does not occur in the furnace. High carbon loss will result in decreased boiler efficiency and may also cause electrostatic precipitator (ESP) operating problems. From Table 4-9, it is seen that increases in carbon loss vary over a wide range and can be as high as 70 to 130 percent of baseline values in some cases. However, increased carbon loss levels have generally been considered acceptable and not a major problem associated with staged combustion.

Extension of the combustion region to higher elevations in the furnace may result in potential problems with excessive steam and tube temperatures in retrofit applications. However, among the numerous short term combustion staging tests conducted, no such problems have been reported. In some tests where furnace and convective section tube temperatures were measured

directly, no significant increase was found. Changes in heat absorption profiles were also found to be minor. Superheater attemperator spray flowrates tripled in one case under retrofit OFA operation, but in all cases they were well within spray flow capacities of the units. Reheater attemperator spray flowrates did not show any increase due to staged operation, thus cycle efficiencies were not affected.

Many new wall-fired coal boilers are being fitted with low $NO_x$ burners (LNB). These burners are designed to reduce $NO_x$ levels either alone, or in some cases, in combination with OFA ports. Using the new burner designs has the advantage of eliminating or decreasing the presence of reducing or near reducing conditions near furnace walls that could cause corrosion. Although low $NO_x$ burner flames are generally less turbulent and hence longer than flames from normal burners, the combustion zone will probably not extend any farther up the furnace than with overfire air operation. Potential changes in heat absorption profile and excessive steam and tube temperatures are, therefore, less likely to occur.

As fuel and air flows are controlled more closely in LNB equipped systems, nonuniform distribution of fuel/air ratios leading to excessive CO generation or high excess air requirements should be reduced. Boiler efficiencies should, therefore, not be affected, especially in new unit designs where adequate volume for carbon burnout is available. However, Table 4-9 shows that the efficiency of one boiler decreased slightly (0.3 percent) when retrofitted with low $NO_x$ burners. The decrease in efficiency was mainly due to the large increase in unburned carbon loss. However, such problems noted in retrofit applications can be avoided in units specifically designed for low $NO_x$ burners. Corrosion rates inferred from tests with corrosion coupons showed no significant increase with the new burners. Some BOOS tests were also carried out on the LNB equipped boiler. A substantial decrease in $NO_x$ emissions resulted, below those already achieved with the new burners alone. However, the boiler was derated by up to 30 percent. Other potential problems noted above as being associated with staged combustion could also arise with this type of firing.

It should be emphasized that the operational effects of $NO_x$ control, in many cases, will be critically dependent on boiler operating conditions. Still, with proper design of retrofit systems and adequate maintenance programs, low $NO_x$ operation should not result in a substantial increase in operational problems over normal boiler operation. Moreover, when $NO_x$ controls are designed into new units, potential problems can be anticipated and largely avoided.

Other advanced $NO_x$ control techniques under development, including the EPA advanced low $NO_x$ burner and EPRI primary combustion furnace, are designed to further minimize some of the potential problems with conventional combustion modifications, such as losses in boiler efficiency and increases in corrosion rates.

Application to Oil-Fired Boilers

For cost reasons, most oil-fired utility boilers fire residual oil. The most commonly used low $NO_x$ techniques for these boilers are staged combustion and flue gas recirculation (FGR), both employed in combination with low excess air firing. These techniques have generally been employed on a retrofit basis since few new oil-fired units are being installed. Other techniques which have been tested are water injection (WI) and reduced air preheat (RAP). However, these have found little application due to associated efficiency losses.

Staged combustion has been applied through the use of overfire air ports (OFA) and by removing burners from service (BOOS). Typical $NO_x$ reductions using OFA are 20 to 30 percent from baseline conditions (controlled emissions of 150 to 170 ng/J, 0.35 to 0.4 lb/$10^6$ Btu). BOOS has been slightly more effective, giving 20 to 40 percent reductions (controlled levels of 130 to 170 ng/J, 0.3 to 0.4 lb/$10^6$ Btu). A load reduction may accompany the use of BOOS on some units.

Flue gas recirculation also typically gives 20 to 30 percent $NO_x$ reductions, but requires more hardware modifications. The combinations of BOOS or OFA with FGR have been most effective, resulting in 30 to 60 percent reductions (controlled emission of 86 to 170 ng/J, 0.2 to 0.4 lb/$10^6$ Btu). With FGR, OFA is preferred over BOOS because flame stability seems to be more of a problem with the combination of FGR + BOOS.

There have been some R&D efforts by EPA and private industry to develop low $NO_x$ emission burners for oil firing. Although no detailed test reports have been released yet, the Babcock & Wilcox dual register low $NO_x$ oil-fired burner has been successfully retrofitted on a utility boiler, achieving emissions below 130 ng/J (0.3 lb/$10^6$ Btu) (Reference 4-5). The combination of overfire air and low $NO_x$ burners may potentially achieve emissions below 86 ng/J (0.2 lb/$10^6$ Btu). An oil-fired low $NO_x$ burner is also under development by Southern California Edison to meet the stringent $NO_x$ regulations for utility boilers in the Los Angeles area.

The effects of low $NO_x$ operation on oil-fired boilers are summarized in Table 4-10. The major concerns regarding low $NO_x$ operation on oil-fired boilers are effects on boiler efficiency, load capacity, vibration and flame instability, and steam and tube temperatures.

Staged combustion operation generally increases the minimum excess air requirements of the boiler, which may result in a loss in boiler efficiency. In extreme cases when the boiler is operating close to the limits of its fan capacity, boiler derating may be required. Derating of as much as 15 percent has been required in some cases due to the lack of capability to meet the increased airflow requirements at full load. In addition, under BOOS firing the fuel flow to the active burners must be increased if load is to remain constant. In many cases, it has been necessary to enlarge the burner tips in order to accommodate these increased flows.

Other potential problems associated with applying staged combustion on a retrofit basis in oil-fired boilers have concerned flame instabilities, boiler vibrations, and excessive convective section tube temperatures. However, in past experience, none of these problems has been significant. Staged operation can result in hazy flames and obscure flame zones. Thus new flame scanners and detectors are often required in retrofit applications. In addition, because staged combustion produces an extended flame zone, flame carryover to the convective section may occasionally occur. However, in one case where intermittent flame carryover occurred, no excessive tube temperatures were recorded.

Similarly, there are a number of potential problems which can occur in retrofit FGR applications. The most common problems, such as FGR fan and duct vibrations, can usually be avoided by good design. Other problems such as flame instability, which can lead to furnace vibrations, are caused by the increased gas velocity at the burner throats. Modifications to the burner geometry and design such as enlarging the throat, altering the burner tips, or adding diffuser plates or flame retainers, may then be required.

Another potential problem sometimes associated with FGR is high tube and steam temperatures in the convective section. The increased mass velocities which occur with FGR reduce furnace heat transfer, but increase convective heat transfer in the convection section. The result is increased convection section flue gas, steam and tube temperatures. Increased mass flowrates in the furnace may also cause furnace pressures to increase beyond safe limits.

The combination of staged combustion and FGR is very effective in reducing $NO_x$ emissions. However, the potential problems associated with each technique are also combined. Tube and steam

TABLE 4-10. EFFECT OF LOW $NO_x$ OPERATION ON OIL-FIRED BOILERS[a]
(Reference 4-3)

| Boiler | Low $NO_x$ Technique | Efficiency | Load Capacity | Vibration and Flame Instability | Steam and Tube Temperatures | Other Effects, Comments |
|---|---|---|---|---|---|---|
| Tangential | | | | | | |
| South Bay No. 4 | LEA | 5% increase | -- | -- | -- | No adverse effects reported. Fan power consumption reduced. |
| | BOOS | Decrease in efficiency compared to LEA due to increased excess air requirements | | | | No other adverse effects reported |
| | RAP | Unaffected due to special preheater design | | -- | -- | Limited tests. $NO_x$ control effectiveness not demonstrated. |
| Pittsburg No. 7 | OFA and FGR | -- | Slower startups and load changes | FGR fan vibration problems | High water wall tube temperatures | |
| SCE tangential boilers | BOOS and FGR | -- | -- | -- | -- | No adverse effects reported |
| Opposed Wall | | | | | | |
| Moss Landing Nos. 6 and 7 (Early experience) | BOOS and FGR | Increased excess air requirements resulting in decreased efficiency | -- | FGR fan and duct vibration, furnace vibration problems. Associated flame instability. | -- | High furnace pressures. Increased FGR and forced draft fan power consumption. |
| Moss Landing No. 6 ($NO_x$ EA tests) | FGR | Unaffected | Unaffected | None | No attemperation changes required | |
| | BOOS and FGR | Unaffected | Unaffected | None | No attemperation changes required | Unit currently operating under low $NO_x$ continuously |
| Ormond Beach Nos. 1 and 2 | BOOS and FGR | Increased excess air requirements resulting in decreased efficiency | 10 to 15% derate due to maxed FD fan capacity | Flame instability and associated furnace vibration | -- | Flame detection problems due to change in flame characteristics |
| | Water injection | Increased sensible and latent stack losses | -- | -- | -- | Limited tests carried out with WI at partial loads. Excess air requirements increased. |

TABLE 4-10. (Continued)

| Boiler | Low $NO_x$ Technique | Efficiency | Load Capacity | Vibration and Flame Instability | Steam and Tube Temperatures | Other Effects, Comments |
|---|---|---|---|---|---|---|
| SCE B&W Units | BOOS and FGR | FGR reduced minimum excess air requirements increasing unit efficiency | -- | Boiler vibration problems | -- | Flame detection problems due to change in flame characteristics |
| Sewaren Station No. 5 | LEA, BOOS | -- | -- | -- | -- | Tests carried out at partial loads. No adverse effects reported. Particulate loading and size distribution unaffected. |
| <u>Single Wall</u> | | | | | | |
| Encina Nos. 1, 2 and 3 | LEA and BOOS (2 burners on air only) | Increased unit efficiency. Some adverse effect on cycle efficiency due to lower steam temperatures. | -- | -- | Decrease in SH & RH steam temperature | No other adverse effects reported |
| | BOOS (3 burners on air only) | Increased excess air requirements resulting in reduced efficiency | 5% derate due to maxed ID fan capacity | In most tests no flame instability or blowoff noted | Intermittent flame carryover to SH inlet but tube temperature limits not exceeded | No abnormal tube fouling, corrosion or erosion noted. Increased tendency to smoke and obscure flame zone. |
| <u>Turbo</u> | | | | | | |
| South Bay No. 3 | Airflow adjustments | Slight reduction in EA resulting in slight increase in efficiency | -- | -- | -- | No adverse effects reported |
| | Water injection | 6% decrease at full load | -- | No flame instability noted even at high rates of WI | -- | No other adverse effects reported |
| | Reduced air preheat | Reduction in efficiency greater than that with water injection | -- | -- | -- | Limited tests |
| Potrero No. 3-1 | OFA and FGR | Higher excess air requirements, but addition of economizer surface expected to improve efficiency | 5% derate due to excessive tube temperatures | Side to side windbox oxygen cycling | Tube and steam temperature limits approached. Increased SH tube failures. | Increased tendency to smoke required higher minimum excess $O_2$ levels. RH surface removed to avoid excessive RH steam attemperation. Larger economizer installed to compensate for RH surface removal. |

[a] -- denotes not investigated.

temperature problems in the upper furnace are an area of concern, as both combustion staging and FGR tend to increase upper furnace temperatures and convective section heat transfer rates. In addition, boiler efficiencies usually decline slightly with combined staged combustion and FGR firing due to higher excess air requirements and greater fan power consumption. However, potential adverse effects for retrofit $NO_x$ control systems can be minimized by proper design and installation. Many of the problems experienced in the past can now be avoided.

Application to Gas-Fired Boilers

The most commonly applied $NO_x$ control technique for gas-fired boilers, as with oil-fired boilers, is staged combustion through the use of OFA or BOOS. These prove more effective when combined with FGR; however, flame stability may be of greater concern when BOOS is combined with FGR. Typical $NO_x$ reductions under either OFA, BOOS, or FGR are 30 to 60 percent from baseline conditions (controlled emissions of 86 to 150 ng/J, 0.2 to 0.35 lb/$10^6$ Btu). The combination of staged combustion and FGR is capable of 50 to 80 percent reduction (controlled levels of 43 to 110 ng/J, 0.1 to 0.25 lb/$10^6$ Btu).

There are no major efforts toward developing a low $NO_x$ burner or other new combustion modification techniques for gas firing because $NO_x$ emissions under current control techniques are already relatively low, and no new gas-fired utility boilers are currently being sold.

The effects of low $NO_x$ operation on gas-fired boilers are summarized in Table 4-11. The effects of low $NO_x$ firing on gas-fired boilers are very similar to those for oil-fired boilers. Usually, there is no distinction between oil- and gas-fired boilers as they are designed to switch from one fuel to the other according to availability. Since boiler design details, $NO_x$ control methods, and the effects of low $NO_x$ operation are similar for gas- and oil-fired units, most of the above discussion of applicable $NO_x$ control measures for oil-fired boilers and potential resulting problems applies here as well. Some effects specific to gas-fired boilers alone are treated briefly below.

$NO_x$ emissions are often difficult to control after switching from oil to gas firing. Residual oil firing tends to foul the furnace due to the oil ash content. Thus, $NO_x$ control measures which have been tested on a clean furnace with gas may be found inadequate after oil firing due to the changed furnace conditions.

TABLE 4-11. EFFECT OF LOW $NO_x$ OPERATION ON GAS-FIRED BOILERS[a]
(Reference 4-3)

| Boiler | Low $NO_x$ Technique | Efficiency[a] | Load[a] Capacity | Vibration and[a] Flame Instability | Steam and Tube[a] Temperatures | Other Effects, Comments |
|---|---|---|---|---|---|---|
| **Tangential** | | | | | | |
| South Bay No. 4 | BOOS | Slight decrease in efficiency due to increased excess air requirements | | | | No other adverse effects reported |
| Pittsburg No. 7 | OFA and FGR | -- | 25% derate due to excessive steam temperatures slower load change response | Fan and duct vibration problems | High tube and RH steam temperatures | |
| **Horizontally Opposed** | | | | | | |
| Moss Landing Nos. 6 and 7 | OFA and FGR | 0.8% decrease in cycle efficiency due to RH steam attemperation | Load curtailment to 50% after oil burns due to SH tube temperature limits being exceeded | Furnace and duct vibration problems. Flame instability. | RH spray and SH tube temperature limits approached after oil burns upper wall tube failures | Furnace pressure limit approached. FGR fan power requirements increased by as much as 66%. Problems associated with switching to gas after oil burning could be eliminated only with complete water washing of furnace. |
| Pittsburg Nos 5 and 6 | OFA and FGR | -- | -- | FGR fan and duct vibrations. Flame instability problems. | Upper water wall tube failures | Boiler initially restricted to manual operation due to problems with flame instability on automatic control |
| Contra Costa Nos. 9 and 10 | OFA and FGR | -- | -- | FGR duct vibrations | High SH and RH steam temperatures. SH tube temperature limits being approached. | Furnace pressure limits approached after oil firing. FGR fan preheating required to reduce vibrations on cold boiler startups. |
| **Single Wall** | | | | | | |
| Encina Nos. 1, 2 and 3 | BOOS (2 and 3 burners out of service) | Low EA levels were possible even with BOOS, resulting in increased efficiency | No derate. Load pickup response not affected | Some pressure pulsing at corners of firebox | Some flame carryover to SH but no problems with high tube temperature or tube wastage | No other adverse effects reported |

[a] -- denotes not reported or investigated

Table 4-11. Concluded.

| Boiler | Low $NO_x$ Technique | Efficiency | Load Capacity | Vibration and Flame Instability | Steam and Tube Temperatures | Other Effects, Comments |
|---|---|---|---|---|---|---|
| Turbo | | | | | | |
| South Bay No. 3 | Water injection | 10% decrease at full load | -- | No flame instability noted even at high rates of WI | -- | No other adverse effects reported |
| Potrero No. 3-1 | OFA and FGR | Installation of larger economizer expected to improve efficiency | 5% derate due to problems with high temperatures | Side to side windbox oxygen cycling | Tube metal and steam temperature limits reached at high loads | Hardware modifications included partial RH surface removal to avoid excessive RH steam attemperation. Larger economizer then installed to compensate for smaller RH surface. |

Boilers fired with gas usually have higher gas temperatures at the furnace outlet than those fired with oil. The upper furnace and convective section inlet surfaces are thus subject to higher temperatures with gas firing. These temperatures may increase further under staged firing or FGR. Upper furnace and convective section tube failures and excessive steam temperatures are therefore more likely to occur with staged firing and FGR applied to gas-fired boilers. The situation may be aggravated further if switching to gas fuel occurs after an oil burn, as fouling will further reduce furnace absorption and, hence, increase gas temperatures. Excessive tube temperatures will usually require derating of the system. These problems could be minimized on new units but no new gas-fired utility boilers are being built.

#### 4.1.1.2 Flue Gas Treatment

Historically, the major $NO_x$ control emphasis in the United States has been on combustion or process modification. However, in Japan where $NO_x$ emission standards are more stringent, flue gas treatment (FGT) technologies have undergone extensive development and implementation. Recently, in the U.S. several pilot and demonstration scale units have been built and operated.

As discussed in Section 3.2, flue gas treatment consists of any of several technologies designed to remove or eliminate $NO_x$ in the flue gas downstream of the combustion zone. Since FGT technologies are distinct from the combustion process, their performance capabilities are usually described in terms of $NO_x$ percentage reduction in the flue gas rather than in terms of achievable emission levels. $NO_x$ reductions with FGT can occur over and above the reductions attributable to combustion modifications.

These postcombustion processes can be divided into dry or wet types. The dry processes can be further categorized into four subdivisions: catalytic reduction, noncatalytic reduction, adsorption, and irradiation. The majority of the dry processes are of the reduction type. These catalytic and noncatalytic reduction processes can also be classified as selective or nonselective processes based on the type of reducing agent used. The majority are selective and usually use $NH_3$ as the reducing agent. If the $NH_3$ is injected after the boiler economizer, where temperature of the flue gas is about 370°C to 430°C (700°F to 800°F), a catalyst is necessary. These processes are described as selective catalytic reduction (SCR) processes. If $NH_3$ is injected into the secondary superheater region of the boiler, where temperature of the flue gas approaches 980°C (1,800°F), a catalyst is not necessary. These processes are described as selective noncatalytic reduction (SNR) processes.

The remainder of this section describes the development status of flue gas treatment technologies and experience in applying them to boiler flue gases. The discussion is organized by fuel type. Much of the material was obtained from Reference 4-6; the reader is referred to this and other documents (e.g. References 4-7, 4-8, and 4-9) for additional information.

Selective Catalytic Reduction (SCR)

The SCR method is the most advanced FGT method, and the one on which the overwhelming majority of existing $NO_x$ FGT units are based. As with the majority of all types of $NO_x$ FGT, most of the SCR processes were developed in Japan. The Japanese have found that with the optimum reaction temperature, usually 300°C to 450°C (570°F to 840°F), an $NH_3$:NO molar ratio of 1:1 typically reduces $NO_x$ emissions by 90% with residual $NH_3$ concentrations of 10 to 20 ppm or higher. It should be noted that the Japanese seem to prefer 80% $NO_x$ removal in which $NH_3$:NO molar ratios range from 0.81:1 to 0.9:1. Under these conditions the unreacted $NH_3$ concentration is usually less than 5 ppm. This reduces capital and operating costs as well as effects on downstream equipment from ammonium salt deposition.

Presently, there are over 60 full scale SCR units successfully operating on gas- or oil-fired boilers in Japan. Over 10 percent of these units are larger than 330 MW. Two commercial SCR units began operating in 1980 on coal-fired boilers in Japan. Construction is scheduled to be completed during 1981-1984 on at least 14 additional SCR units for coal-fired boilers ranging in capacity from 75 to 700 MW (References 4-10, 4-11, and 4-12). The results of the Japanese experience on these units must be tempered by the dissimilarities with U.S. facilities including maintenance practices, load cycling, and overhaul practices.

In the United States, EPA and the Electric Power Research Institute (EPRI) are evaluating SCR on coal-fired pilot scale units. EPA sponsored two 0.5 MW size tests. The Shell Flue Gas Treatment process for simultaneous $NO_x$ and $SO_x$ control was evaluated at Tampa Electric Company's Big Bend Station. This process controls $NO_x$ by selective catalytic reduction although it uses a different catalyst than other SCR processes. The Hitachi Zosen SCR process was tested at the Plant Mitchell Station of Georgia Power Company. Test results showed that both processes are technically capable of achieving significant $NO_x$ reductions from coal-fired boilers in the U.S.

One conclusion of the testing was that SCR test work is needed when considering SCR process applications for untested coals. Another was that a prototype scale test on a 10 to 100 MW facility would be useful for demonstrating the technology for coal-fired sources in the U.S. For further details on the results of these tests, the reader is referred to Reference 4-13.

In other U.S. testing, EPRI has operated a 2.5 MW pilot unit on a coal-fired boiler at the Arapahoe Station of Public Service Company of Colorado using the Kawasaki Heavy Industries process. Also, testing of the first large scale SCR demonstration unit in the U.S. is planned by Southern California Edison Company at the Huntington Beach Station. The unit will be 107.5 MW in capacity and applied to a oil- and gas-fired boiler.

Since the SCR reactor is located downstream of the boiler economizer, its process impacts are also largely limited to this region. These include potential problems with the SCR reactor itself, the air preheater, and downstream emission control systems.

Dr. Jumpei Ando (Reference 4-14) reports that early in its development SCR had several serious problems. These included:

(1) Catalyst poisoning by $SO_x$ in the flue gas;
(2) Plugging of the catalyst by dust;
(3) Deposition of ammonium bisulfate on the catalyst at reduced boiler loads;
(4) Deposition of ammonium bisulfate on the air preheater;
(5) Promotion of the oxidation of $SO_2$ to $SO_3$ in the flue gas; and
(6) Erosion of the catalyst by fly ash from the coal.

These problems have been largely resolved as follows:

Problem (1) - Development of $SO_x$ resistant catalysts based on $TiO_2$ rather than $Al_2O_3$ or $Fe_2O_3$;

Problem (2) - Using parallel-flow catalysts such as honeycomb, plate, and tube shapes, parallel passage reactors, and sootblowing when needed;

Problem (3) - Keeping the reactor temperature above 300°C by using economizer bypass gas when needed;

Problem (4) - Keeping $NH_3$ leakage at the reactor outlet at a low level (e.g. below 5 ppm);

Problem (5) - Development of low oxidation catalysts which also helps to solve problems 3 and 4; and

Problem (6) - Using moderate gas velocities, hard catalysts, and a device (e.g. a dummy spacer) for erosion prevention.

Jones (Reference 4-15) reports that a major area of research and development involves minimizing the impacts of SCR systems on downstream equipment such as air preheaters, particulate collection devices and $SO_2$ removal equipment. Problems with the air preheater occur when ammonium bisulfate ($NH_4HSO_4$) deposits plug and corrode the elements. $NH_4HSO_4$ is the product of a condensation reaction between $NH_3$, $SO_3$ and $H_2O$, which can occur when the flue gas temperature drops below about 210°C. Japanese pilot unit tests have shown that the plugging problem is most severe in units which fire coal or high sulfur oil and also remove fly ash upstream of the $NO_x$ reactor. When fly ash is removed downstream, plugging problems are significantly reduced. It is felt that the fly ash produces a sandblasting effect that cleans the air preheater elements and also that some of the $NH_4HSO_4$ condenses on the fly ash particles rather than the elements. Plugging problems are reduced or eliminated by installing soot blowers on both sides of the air preheater and increasing both the frequency and pressure of the soot blowing operation. In some cases, special air preheater designs will be used in which the intermediate and low temperature zones are manufactured as a single element. These have been tested on pilot unit equipment. A full scale installation is scheduled at the Electric Power Development Company's Takehara Power Station.

$NH_3$ from an SCR reactor apparently does not impair FGD system performance although, in some cases, the wastewater must be treated to remove nitrogen compounds. It is not known if SCR systems will affect dry $SO_2$ removal systems (e.g., spray drying) since these techniques are not used in Japan. The one apparent adverse impact that may occur is $NH_4HSO_4$ affecting the performance of the downstream baghouse. The effect of an SCR system on baghouses is under investigation. Pilot unit tests are underway.

Several of the coal-fired SCR applications that are under construction utilize hot-side ESPs for upstream particulate removal, and there are a variety of reasons for selecting hot-side particulate removal. These reasons include:

(1) To eliminate fly ash from entering the $NO_x$ system and potentially causing plugging or erosion problems;
(2) To obtain the capability to remove particulates from a wide range of coals with varying characteristics; and

(3) To avoid ammonia compounds in the ash that can result when a cold-side ESP is used.

However, cold-side ESPs also have unique advantages such as:

(1) Lower capital and operating costs; and
(2) Allowing the fly ash to reduce or eliminate $NH_4HSO_4$ deposits on air preheaters.

Jones further discusses the fact that there has been concern that the catalyst and reactor may plug with ash when applied to coal-fired boilers. Pilot unit tests have indicated that plugging is not a problem when honeycomb or pipe shape catalyst is used in a vertical, downflow arrangement. However, soot blowers will be installed in the reactors of current full scale applications as a conservative design measure. Another concern in the U.S. has been catalyst poisoning by flue gas components. While it is true that certain alkali metals, such as sodium and potassium, will slowly poison the catalyst, the concentrations are low enough that catalyst activity will not be affected during the guarantee period. Catalyst life guarantees are usually one year for coal, one to two years for oil, and two to three years for gas although the experience on gas- and oil-fired boilers has been that actual catalyst life exceeds the guarantee.

The labor requirements of the operating, full-scale systems are small. No additional operating personnel are required and maintenance labor consists primarily of $NH_3$ and catalyst loading and cleaning the air preheater during the annual outage. Since there have been no catalyst changes to date, the labor estimates for this work vary widely. Operators indicate that the SCR processes themselves are very reliable, essentially 100%. However, in some cases, a boiler shutdown has been necessary where air preheater plugging has occurred. In most cases steps have been undertaken to reduce the plugging rate to the extent that cleaning is only required during normal boiler outages.

Some additional process impacts have been reported for retrofit applications (Reference 4-16). For example, in many cases all equipment and ducting downstream of the economizer, including the stack, will have to be relocated to make room for the reactor and the ammonia flue gas mixer. Existing structures, equipment, and other site constraints may interfere with the required expansion of the back end of the boiler, thus requiring major site rearrangements. This requirement could cause long construction periods and extended unit outages. Also, larger units may require a booster

fan to overcome the added system pressure drop, causing a conversion from forced draft to balanced draft operation. This may result in somewhat greater risk of boiler implosion.

Selective Noncatalytic Reduction (SNR)

Exxon Research and Engineering Corporation developed the SNR process in which $NH_3$ is injected into the boiler where proper flue gas temperatures allow the reduction of $NO_x$ by reaction with $NH_3$ to proceed without a catalyst. Generally, 40% to 60% $NO_x$ reduction is achieved with $NH_3$:$NO_x$ molar ratios of 1:1 to 2:1. SNR may be more attractive than SCR in cases where only 40% to 60% $NO_x$ control is needed since SNR is simple and does not require expensive catalysts.

The general disadvantage of SNR is the limited $NO_x$ control achievable, especially with larger boilers. This limited control results from the difficulty of achieving rapid uniform mixing of $NH_3$ with the flue gas and from the variations of flue gas temperature and composition usually present within the boiler region where the SNR is operated. $NH_3$ consumption and unreacted $NH_3$ levels can also be high because of the high $NH_3$:$NO_x$ molar ratios needed with this process. Also, many of the same problems of ammonium salt formation, previously discussed for SCR processes, occur with SNR as well.

There are several large SNR units installed in Japan, between 30- and 100-MW capacity, mostly supplied by Tonen Technology (a subsidiary of Toa Nenryo) which has a license from Exxon. These units are operated on gas- and oil-fired boilers or furnaces. Practically all are only for emergency use during a photochemical smog alert or when total plant emissions exceed the regulation.

There are presently two commercial SNR plants operating in the United States. One is on a glass melting furnace and the other a petroleum refinery, both located in California. The construction of five other industrial-scale units is planned. The SNR process is also being installed by Exxon at the No.4 oil-fired unit of the Haynes Station of the Los Angeles Department of Water and Power.

Other Flue Gas Treatment Techniques

In addition to SCR and SNR, dry processes which are being developed for simultaneous $SO_x$ and $NO_x$ control include:

(1) Activated carbon processes where $NH_3$ reduces $NO_x$ to $N_2$;

(2) Copper oxide processes where $NH_3$ reduces $NO_x$ to $N_2$; and

(3) Electron beam irradiation processes in which $NH_3$ is added to produce ammonium sulfate and nitrate.

Also, work has been conducted on various wet processes for simultaneous $SO_x$ and $NO_x$ control.

The optimum temperature range for simultaneous $SO_x$ and $NO_x$ control with activated carbon processes is 220°C to 230°C (430°F to 445°F). Although $NO_x$ may be adsorbed below 100°C (212°F), for treating large quantities of flue gas above 100°C the carbon is mainly useful as an $NO_x$ reduction catalyst. Therefore, while $NO_x$ is converted to $N_2$ by reaction with $NH_3$ in the presence of the activated carbon catalyst, $SO_2$ is simultaneously adsorbed by the carbon to form $H_2SO_4$. The $H_2SO_4$ may also compete for $NH_3$ in forming ammonium sulfate or bisulfate. The formation of these ammonium salts increases $NH_3$ consumption and also lowers catalyst activity. The carbon must be regenerated, either by washing or thermal regeneration. Washing produces a dilute solution. Concentration of the solution to produce a fertilizer requires much energy. Thus, thermal regeneration seems to be preferred. A concentrated $SO_2$ gas is recovered, which can be used for sulfuric acid or elemental sulfur production.

The major drawback of the activated carbon processes is the enormous consumption of activated carbon, which is more expensive than ordinary carbon used only for $SO_x$ removal. Since carbon and ammonia consumption increase with the $SO_2$ content of the flue gas, the process is best suited for flue gases relatively low in $SO_2$. In Japan Sumitomo Heavy Industries and Unitika Company have operated activated carbon pilot plants of 0.6 MW and 1.5 MW capacity respectively.

The Shell Flue Gas Treatment process may simultaneously remove $SO_x$ and $NO_x$. $SO_x$ reacts with the copper oxide acceptor to form copper sulfate. The copper sulfate and copper oxide are SCR catalysts for the $NO_x$ reduction by $NH_3$. Regeneration of the multiple catalyst beds by a reducing gas, such as $H_2$, yields a $SO_2$-rich stream that can be used to produce liquid $SO_2$, elemental sulfur, or sulfuric acid. By eliminating $NH_3$ injection, the process is strictly an FGD process, whereas, eliminating regeneration of the catalyst beds allows the process to be used for only $NO_x$ control. The major disadvantages are the large consumption of fuel for making hydrogen and the catalyst expense.

In addition to the EPA-sponsored pilot plant mentioned earlier, the process has been installed in Japan on a 40-MW oil-fired boiler. The unit has demonstrated 90% $SO_x$ removal and 70% $NO_x$ reduction.

Another process for simultaneous $SO_x$ and $NO_x$ control is the electron beam process developed by Ebara Manufacturing Company in Japan. $NH_3$ is added to the flue gas, after which the gas stream is irradiated with an electron beam in a reactor, promoting the conversion of $SO_x$, $NO_x$, and $NH_3$ to ammonium sulfate and ammonium nitrate. The ammonium sulfate and ammonium nitrate may be collected downstream in an ESP or baghouse and potentially sold as a fertilizer. The most economically practical removal efficiency range appears to be 80% to 90% for each of $NO_x$ and $SO_x$, though higher removals can be achieved with much greater electron beam energy input. The optimum temperature range is 70°C to 90°C (160°F to 195°F).

Ebara has worked on the process since 1971. It has been tested at a 0.3 MW and 3 MW scale in Japan. Avco Corporation in the United States has also examined this technique and has a cross-licensing agreement with Ebara in sharing of technology and in marketing of the process. Although the process appears attractive because of simplicity, simultaneous $SO_x$ and $NO_x$ control, and byproduct formation, there are still many questions concerning costs and byproduct quality which must be determined.

Development of an alternate electron beam scrubbing process was begun in 1979 by Research-Cottrell under contract to the Department of Energy (DOE). With this process a lime spray drier is located upstream of the reactor. Calcium sulfate and calcium nitrate are produced in the reactor and caught in a downstream baghouse. Some bench scale testing has been done with this process. DOE plans proof-of-concept scale testing of both the ammonia injection and lime slurry injection electron beam processes on real coal-fired slip streams (Reference 4-17).

The wet FGT processes normally involve simultaneous removal of $SO_x$ and $NO_x$. The major problem associated with wet $NO_x$ control processes is the absorption of $NO_x$ by the scrubbing solution in which it can be concentrated and converted into other forms. $NO_x$ in the flue gas is predominantly NO, which is much less soluble than $NO_2$, whereas, $NO_2$ is even less soluble than $SO_2$. The two common methods of removing the $NO_x$ in flue gas by wet processes are: (1) direct absorption of the $NO_x$ in the absorbing solution or (2) gas-phase oxidation to convert the relatively insoluble NO to $NO_2$, followed by absorption of $NO_2$. Presently, development of the wet $NO_x$ FGT processes has practically ceased because of the complexity and unfavorable economics of these processes in comparison with the dry processes.

### 4.1.2 Costs

In this section some available estimates of the capital and annualized costs of alternative $NO_x$ control techniques are presented. The section is divided into two major subsections - combustion modifications and flue gas treatment. The costs and discussion for combustion modifications were largely taken from two reports prepared for EPA by Acurex Corporation (References 4-18 and 4-19). Much of the costs and discussion for flue gas treatment techniques were taken from a report prepared for the EPA by TVA (Reference 4-20). However, as noted in the section, several other references were also used.

The reader should be careful in attempting to compare the costs presented in this section. Some differences in methodologies and bases were used in developing these costs. For detailed discussions of how these costs were developed, the reader is referred to the original references.

#### 4.1.2.1 Combustion Modification

Recently, as discussed in the above references, Acurex Corporation conducted an environmental assessment for EPA of various utility boiler combustion modification $NO_x$ controls. As part of this study costs were developed for a number of cases representing retrofit and new boiler applications. The following discussion is largely taken from this study.

The use of accepted estimation procedures for costing $NO_x$ control implementation in current dollars was employed in this study, with heavy reliance on discussions with boiler manufacturers, equipment vendors, and utilities. For the case of retrofit control costs, preliminary design work was performed to allow estimation of hardware and installation needs, as well as engineering requirements. The analysis was applied to a number of cases to give a range of retrofit control costs. For the cost of $NO_x$ controls in new boilers, the services of two major suppliers, the Babcock & Wilcox Company and the Foster Wheeler Energy Corporation, were enlisted.

For the analysis of the cost of controls, regulated public utility economics were adopted. Based on a revenue requirement approach, an annualized cost methodology was developed, adapted from that used by the Tennessee Valley Authority in evaluating the cost of power plant projects for EPA (Reference 4-21) and EPRI (Reference 4-22). This procedure has been generally accepted in the industry (References 4-23 through 4-25).

For the present application, the additional revenue requirement represents the incremental cost of operating a boiler under controlled conditions over and above the cost of operating the same boiler uncontrolled. In other words, the revenue requirement takes into account the initial investment, the annual capital charges resulting from that investment, and all direct operating costs such as operation and maintenance. This methodology is described in detail in Reference 4-18.

Retrofit Control Costs

Based on this cost analysis methodology, typical retrofit control costs (1978 dollars) are summarized in Table 4-12. The costs shown in the table should be considered only representative of retrofit costs. They apply to retrofitting relatively new boilers, approximately 5 to 10 years old with at least 25 years of service remaining. With the exception of BOOS for coal-fired units, and FGR/OFA for oil- and gas-fired units, annualized control costs generally fall in the $0.50 to 0.70/kW-yr, based on a 7000-hour operating year. For comparison, the cost of operating a power plant is approximately $175/kW-yr.

BOOS was not treated in the cost analysis as a recommended control technique for coal firing. Rather it was included to show the extremely high cost of derating. This high cost was due principally to the need to purchase make up power and to account for the lost capacity of the system through a capital charge.

Tables 4-12 and 4-13 present projected retrofit control requirements for alternative $NO_x$ emission levels. Based on favorable process analysis results, it is evident from an examination of these tables that OFA and LNB are the preferred, cost-effective $NO_x$ controls for coal firing. For high levels of $NO_x$ control for coal-fired units (170 ng/J), both OFA and LNB may be appropriate. For more moderate levels of control, LNB are less expensive and more cost-effective than OFA in reducing $NO_x$ in wall-fired units. However, retrofit of low $NO_x$ burners may not be widely applicable.

As far as moderate control for oil- and gas-fired units, staged combustion via BOOS appears to be the preferred route, as indicated in Tables 4-12 and 4-13. Initial investment is minimized since there are no associated major hardware requirements, only engineering and startup costs. To reach the next level of $NO_x$ control (86 ng/J for oil, 43 ng/J for gas), FGR with OFA would seem to be in order. However, this alternative results in a cost increase from $0.52/kW-yr for BOOS to $3/kW-yr for FGR and OFA.

TABLE 4-12. SUMMARY OF UTILITY BOILER COMBUSTION MODIFICATION CONTROL COSTS (1978 DOLLARS) (Reference 4-19)

| Boiler/Fuel Type | MCR[a] (MW) | Initial Investment ($/kW) | Annualized Indirect Operating Cost ($/kW-yr) | Annualized Direct Operating Cost ($/kW-yr) | Total Cost To Control ($/kW-yr)[b] |
|---|---|---|---|---|---|
| Tangential/Coal-Fired | | | | | |
| OFA | 225 | 0.96 | 0.22 | 0.34 | 0.57 |
| Opposed Wall/Coal-Fired | | | | | |
| OFA | 540 | 0.66 | 0.17 | 0.55 | 0.73 |
| LNB | 540 | 2.17 | 0.36 | 0.06 | 0.42 |
| BOOS | 540 | 0.09 | 5.70 | 26.40 | 32.10 |
| Single Wall/Oil- and Gas-Fired | | | | | |
| BOOS | 90 | 0.32 | 0.05 | 0.47 | 0.52 |
| FGR/OFA | 90 | 6.09 | 1.22 | 2.04 | 3.26 |

[a]Maximum continuous rating in MW of electrical output.

[b]Based on 7000-hour operating year. Typical costs only.

TABLE 4-13. PROJECTED RETROFIT CONTROL REQUIREMENTS FOR ALTERNATE $NO_x$ EMISSIONS LEVELS (Reference 4-19)

| Fuel/$NO_x$ Emission Level ng/J (lb/$10^6$ Btu) | Recommended Control[a] | Cost to Control $/kW-yr[b] |
|---|---|---|
| Coal | | |
| 301 (0.7) | OFA | 0.50 to 0.70 |
| 258 (0.6) | OFA | 0.50 to 0.70 |
| 215 (0.5) | LNB[c] | 0.40 to 0.50 |
| 172 (0.4) | OFA + LNB[c] | 0.95 to 1.20 |
| Oil | | |
| 129 (0.3) | BOOS | 0.50 to 0.60 |
| 86 (0.2) | FGR + OFA | 3.00 |
| Gas | | |
| 86 (0.2) | BOOS | 0.50 to 0.60 |
| 43 (0.1) | FGR + OFA | 3.00 |

[a]LEA considered standard operating practice.

[b]Typical installation only; could be significantly higher; includes capital and operating costs.

[c]Technology not thoroughly demonstrated for retrofit yet.

Control Costs for New Boilers

Estimating the incremental costs of $NO_x$ controls for new boilers is in some respects an even more difficult task than costing retrofits. Certain modifications on new units, though effective in reducing $NO_x$ emissions, were originally incorporated due to operational considerations rather than from a control viewpoint. For example, the furnace of a typical new unit has been enlarged to reduce slagging potential and allow the burning of poorer quality fuels. But this improvement also reduces $NO_x$ due to the lowered heat release rate. Thus, since the design change would have been implemented even without the anticipated $NO_x$ reduction, the cost of that design modification should not be attributed to $NO_x$ control.

Babcock & Wilcox has estimated the incremental costs of $NO_x$ controls on a coal-fired boiler designed to meet 19/1 NSPS (Reference 4-26). Units designed prior to 1971 did not include $NO_x$ controls. $NO_x$ emissions from coal-fired units designed at that time were on the order of 430 ng/J (1.0 lb/$10^6$ Btu). The 1971 NSPS required that these emissions be limited to 300 ng/J (0.7 lb/$10^6$ Btu). The two units used in the comparison by Babcock & Wilcox were identical except for $NO_x$ controls on the NSPS unit which included:

- Replacing the high turbulence, rapid-mixing cell burner with the limited turbulence dual register (low $NO_x$) burner;
- Increasing the burner zone by spreading the burners vertically to include 22 percent more furnace surface; and
- Metering and controlling the airflow to each row of burners using a compartmented windbox.

To provide these changes for $NO_x$ control, the price increase was about \$1.87 to \$2.67/kW (1978 dollars). If these costs are annualized, they translate to \$0.30 to 0.43/kW-yr.

In addition, Foster Wheeler has performed a detailed design study aimed at identifying the incremental costs of $NO_x$ control to meet 1971 NSPS (Reference 4-27). Foster Wheeler looked at three unit designs with the following results:

| | Boiler Design | Relative Cost |
|---|---|---|
| Unit 1: | Pre-NSPS base design | 100 |
| Unit 2: | Enlarged furnace, no active $NO_x$ control | 114 |

| | | |
|---|---|---|
| Unit 3: | NSPS design; enlarged furnace, new burner design, perforated hood, overfire air, boundary air | 115.5 |

For a pre-NSPS coal-fired boiler costing about $192/kW in 1978 construction costs, the incremental cost of active $NO_x$ controls (LNB plus OFA) is $2.97/kW, or about $0.47/kW-yr annualized. The Foster Wheeler estimate, which includes both LNB and OFA, thus agrees quite well with the Babcock & Wilcox estimate, which includes only LNB and associated equipment.

Comparing these costs with the retrofit costs (0.40 to 0.70 $/kW-yr for LNB or OFA) presented in Table 4-13 and considering the better $NO_x$ control anticipated with NSPS units, it is certainly more cost effective to implement controls on new units. Furthermore, fewer operational problems are expected with units specifically designed for these controls.

Advanced combustion modification concepts under development, such as the EPA advanced low $NO_x$ burner (Reference 4-28) and EPRI primary combustion furnace (Reference 4-29), are targeted to achieve $NO_x$ emission levels around 86 ng/J (0.2 lb/$10^6$ Btu) on a commercial basis in the 1980's. Projected cost for the EPRI furnace is $4/kW or $0.80/kW-yr (Reference 4-30). The EPA advanced burner costs should fall in the same range. These developing advanced combustion modifications should eventually prove much more cost-effective than the developing post combustion techniques discussed next. However, the latter techniques are currently closer to commercialization.

In conclusion, conventional combustion modifications are indeed a cost-effective means of control for $NO_x$, raising the cost of electricity less than 1 percent in most cases. Furthermore, the initial capital investment required should also only be of the order of 1 percent or less of the installed cost of a boiler. Advanced techniques such as advanced low $NO_x$ burners and advanced boiler/furnace concepts have projected costs of the same order as conventional combustion modifications. Therefore, preferred current and projected combustion modification techniques are not expected to have a substantial adverse economic impact.

#### 4.1.2.2 Flue Gas Treatment

As discussed in Reference 4-20, TVA, under contract to EPA, conducted a preliminary economic analysis in 1980 to compare several flue gas treatment (FGT) processes. The following discussion is largely taken from this reference. Some additional cost information and references are also presented.

1980 TVA Study

The TVA study developed preliminary economics, comprising total capital investment and annual revenue requirement estimates, for seven $NO_x$ FGT processes. The economics were calculated based on a consistent set of design and economic premises that have formed the basis for many previous flue gas desulfurization (FGD) studies done by TVA. The reader should be cautioned that at the time these costs were developed, most of these systems were at an early stage of development for coal-fired applications. Thus, actual systems could vary significantly from the costs presented here.

The FGT processes evaluated are shown in Table 4-14. These include one dry and three wet processes for simultaneously controlling $SO_x$ and $NO_x$ and three dry processes for controlling $NO_x$ alone. The dry processes all employ selective catalytic reduction (SCR) for controlling $NO_x$. Among the dry processes, the Hitachi Zosen process employed a fixed bed reactor with "honeycomb" shaped catalyst cells through which the flue gas passes in parallel flow; the Kurabo Knorca process employed a moving bed reactor with spherically shaped catalyst located downstream of a hot ESP; and the Shell Flue Gas Treatment process employed a fixed bed, parallel passage reactor in which the catalyst is contained in unit cells and the flue gas is forced across the face of the catalyst layer.

The power plant assumed as a basis for this study was a new, 500 MW coal-fired boiler. The coal had a heating value of 10,500 Btu/lb and contained 3.5 percent sulfur and 16 percent ash. The plant efficiency was 9000 Btu/kWh and the boiler on-stream time was 7000 hr/yr.

In addition to the design premises for the $NO_x$ FGT process itself, the design premises for an overall FGT system, including PM removal and FGD, were developed to allow for comparisons of the various dry and wet processes. The design premises for the FGT system included the following removal efficiencies:

- particulate: 99.5%;
- $SO_x$: 90%; and
- $NO_x$: 90% from a baseline of 600 ppm.

The capital investment estimates were based on mid-1979 construction costs. The annual revenue requirements were based on mid-1980 operating costs using average capital charges with a 7000 hr/yr on-stream time. Additional details on the design and economic premises are provided in Reference 4-20.

TABLE 4-14. $NO_x$ FGT PROCESSES SELECTED FOR EVALUATION BY TVA IN 1980 STUDY (Reference 4-20)

| Process | Type |
|---|---|
| Dry $NO_x$ -only | |
| Hitachi Zosen | Selective catalytic reduction |
| Kurabo Knorca | Selective catalytic reduction |
| UOP Shell Flue Gas Treatment (SFGT-N) | Selective catalytic reduction |
| Dry $SO_x$ -$NO_x$ | |
| UOP Shell Flue Gas Treatment (SFGT-SN) | Sorption of $SO_x$ and selective catalytic reduction of $NO_x$ |
| Wet $SO_x$ -$NO_x$ | |
| Asahi | Absorption-reduction |
| Ishikawajima-Harima Heavy Industries (IHI) | Oxidation-absorption-reduction |
| Moretana Calcium | Oxidation-absorption-reduction |

The capital investment and annual revenue requirement estimates by TVA for these systems are presented in Tables 4-15 and 4-16, respectively. The capital investments for the various $NO_x$-only FGT processes ranged from \$38/kW to \$48/kW. For the combined SCR-FGD-ESP systems, the capital investments ranged from \$165/kW to \$175/kW. For the wet $SO_x$-$NO_x$ processes the capital investments ranged from \$205/kW to \$482/kW. The dry $SO_x$-$NO_x$-ESP was \$169/kW.

The annualized costs of a dry SCR system ranged from 2.1 to 3.6 mills/kWh. The total system costs of SCR combined with FGD and ESP ranged from 7.1 to 8.6 mills/kWh. In comparison, the costs of a dry $SO_x$-$NO_x$-ESP system were 7.5 mills/kWh and the costs of the wet $SO_x$-$NO_x$ systems ranged from 12 to 20 mills/kWh.

The results of this study can be summarized as follows. The wet $SO_x$-$NO_x$ processes do not appear economically attractive for new power plant applications when compared with either the dry $SO_x$-$NO_x$ process or the SCR-FGD systems. Comparisons between the dry SFGT-SN process and SCR-FGD systems were close enough to be inconclusive considering the state of development of these systems at that time. Comparisons within the SCR-FGD systems, i.e., moving versus parallel flow, fixed bed reactors were also inconclusive. However, recent trends in Japan indicate the fixed bed reactor systems are preferred.

Other Studies

Some other studies have also presented cost information for various FGT systems as summarized below.

A 1981 TVA study (Reference 4-6) made a preliminary economic evaluation of three control methods for obtaining 50 percent $NO_x$ reduction and three methods for obtaining 90% reduction. The base case power plant was a new 500 MW coal-fired unit emitting 0.6 lb $NO_2/10^6$ Btu in the flue gas. Capital investment estimates were based on projected mid-1982 construction costs. The revenue requirements were based on projected 1984 costs.

The three 50 percent $NO_x$ reduction processes evaluated were the EPA sponsored advanced low $NO_x$ burner (ALNB), the Exxon Thermal $DeNO_x$ process, and the Hitachi Zosen SCR process. For 90 percent $NO_x$ reduction the ALNB was combined with the Hitachi Zosen process, the Exxon process was combined with the Hitachi Zosen process, and the Hitachi Zosen process was used alone. Capital investments and annual revenue requirements for these processes are presented in Tables 4-17 and 4-18, respectively.

TABLE 4-15. CAPITAL INVESTMENT DEVELOPED BY TVA FOR ALTERNATIVE FGT SYSTEMS (Reference 4-20)

| Process | Total Capital Investment | | | | | |
|---|---|---|---|---|---|---|
| | M$ | | | | $/kW | $/aft$^3$/min |
| | FGT | FGD | ESP | Total | Total | Total |
| Dry $NO_x$-only | | | | | | |
| UOP SFGT-N | 18.4 | 50.4 | 10.8 | 79.6 | 165 | 37.1 |
| Kurabo Knorca | 21.2 | 50.4 | 12.1 | 83.7 | 174 | 39.0 |
| Hitachi Zosen | 23.3 | 50.4 | 10.8 | 84.5 | 175 | 39.4 |
| Dry $SO_x$-$NO_x$ | | | | | | |
| UOP SFGT-SN[a] | 67.2 | - | 14.6 | 81.8 | 169 | 38.1 |
| Wet $SO_x$-$NO_x$ | | | | | | |
| Moretana Calcium | 88.0 | - | 7.2 | 95.2 | 205 | 44.4 |
| Asahi | 104.9 | - | - | 104.9 | 233 | 48.9 |
| IHI | 203.6 | - | - | 203.6 | 482 | 94.9 |

[a]Based on hydrogen production from naphtha and $H_2SO_4$ byproduct from $SO_2$.

TABLE 4-16. ANNUAL REVENUE REQUIREMENTS DEVELOPED BY TVA FOR ALTERNATIVE FGT SYSTEMS (Reference 4-20)

| Process | Annual Revenue Requirements, M$ | | | | Equivalent Unit Revenue Requirements, mills/kWh |
|---|---|---|---|---|---|
| | FGT | FGD | ESP | Total | Total |
| Dry $NO_x$-only | | | | | |
| UOP SFGT-N | 7.2 | 14.7 | 2.2 | 24.1 | 7.13 |
| Kurabo Knorca | 9.3 | 14.7 | 2.7 | 26.7 | 7.91 |
| Hitachi Zosen | 12.2 | 14.7 | 2.2 | 29.1 | 8.60 |
| Dry $SO_x$-$NO_x$ | | | | | |
| UOP SFGT-SN[a] | 22.5 | - | 3.0 | 25.5 | 7.53 |
| Wet $SO_x$-$NO_x$ | | | | | |
| Moretana Calcium | 38.1 | - | 1.5 | 39.6 | 12.20 |
| Asahi | 39.8 | - | - | 39.8 | 12.63 |
| IHI | 58.6 | - | - | 58.6 | 19.82 |

[a]Based on hydrogen production from naphtha and $H_2SO_4$ byproduct from $SO_2$.

TABLE 4-17. SUMMARY OF CAPITAL INVESTMENTS DEVELOPED IN 1981 TVA STUDY (Reference 4-6)

| Process | Capital Investment (projected mid-1982$) M$ | $/kW |
|---|---|---|
| 50% $NO_x$ Reduction | | |
| ALNB | 2.4 | 4.8 |
| Exxon | 9.9 | 19.7 |
| Hitachi Zosen | 15.7 | 31.4 |
| 90% $NO_x$ Reduction | | |
| ALNB/Hitachi Zosen | 25.9 | 51.8 |
| Exxon/Hitachi Zosen | 32.1 | 64.2 |
| Hitachi Zosen | 25.5 | 50.9 |

TABLE 4-18. SUMMARY OF ANNUAL REVENUE REQUIREMENTS DEVELOPED IN 1981 TVA STUDY (Reference 4-6)

| Process | Annual Revenue Requirements (projected 1984$) First Year M$ | First Year Mills/kWh | Levelized M$ | Levelized Mills/kWh |
|---|---|---|---|---|
| 50% $NO_x$ Reduction | | | | |
| ALNB | 0.45 | 0.17 | 0.54 | 0.20 |
| Exxon | 3.4 | 1.2 | 5.1 | 1.9 |
| Hitachi Zosen | 8.0 | 2.9 | 13.0 | 4.7 |
| 90% $NO_x$ Reduction | | | | |
| ALNB/Hitachi Zosen | 11.5 | 4.2 | 18.4 | 6.7 |
| Exxon/Hitachi Zosen | 14.2 | 5.2 | 22.6 | 8.2 |
| Hitachi Zosen | 13.3 | 4.9 | 21.9 | 7.9 |

As expected, the ALNB, a combustion modification, is projected to be the least expensive $NO_x$ control method among those studied. Also, the costs for obtaining high levels of $NO_x$ reduction (90 percent) are significantly greater than for more moderate levels (50 percent).

In November 1982 the Electric Power Research Institute completed a detailed technical and economic review of four FGT processes (Reference 4-31). The economic analysis was based on preliminary designs for a 500 MW (net) capacity power plant located in the midwest and burning low sulfur (0.5%) Powder River Coal. The results of the economic analysis are presented in Table 4-19.

As found in previous studies, non-catalytic processes are less expensive than catalytic processes from both a net cost and a cost per ton of pollutant removed basis. Also, costs increase significantly for higher levels of control and for treating flue gases with higher $NO_x$ concentrations.

In a recent paper (Reference 4-32), Ando reports that most coal-fired boilers in Japan will use a flue gas cleaning system consisting of SCR using a honeycomb or plate catalyst, an ESP, and FGD by the limestone-gypsum process using a prescrubber with a separate liquor loop. The costs of generating power by coal, including gas cleaning and wastewater treatment, is less than that by low sulfur oil without gas cleaning. SCR is much less costly than FGD but is more costly than combustion modification. Simultaneous $SO_x/NO_x$ removal processes and fluidized bed combustion have not yet proved to be better alternatives to combined cleaning.

### 4.1.3 Energy and Environmental Impact

In addition to affecting the cost of operating electrical generating combustion equipment, implementing $NO_x$ control techniques can also impact overall plant efficiency and emissions levels of pollutants other than $NO_x$. These energy and environmental impacts are discussed below.

#### 4.1.3.1 Energy Impact

This section discusses the energy impacts resulting or expected with various combustion modification and flue gas treatment $NO_x$ control techniques.

TABLE 4-19a ESTIMATED TOTAL CAPITAL REQUIREMENT OF POST COMBUSTION $NO_x$ CONTROL PROCESSES (S/kW, 1979)

**NON-CATALYTIC**

| Inlet $NO_x$, ppm | 300 | | | 600 |
|---|---|---|---|---|
| $NO_x$ Reduction, % | 33 | 50 | 55 | 55 |
| Outlet $NO_x$, ppm | 200 | 150 | 135 | 270 |
| Exxon - Dual Grid | 11 | 11 | 12 | 14 |
| Exxon - With $H_2$ | 12 | 13 | 13 | 17 |

**CATALYTIC**

| Inlet $NO_x$, ppm | 300 | | | 600 |
|---|---|---|---|---|
| $NO_x$ Reduction, % | 67 | 83 | 90 | 95 |
| Outlet $NO_x$, ppm | 100 | 50 | 30 | 30 |
| Kawasaki HI | 41 | 42 | 46 | 56 |
| Hitachi Zosen | 58 | 65 | 68 | 73 |
| Shell FGT* | 161 | 169 | 169 | 179 |

TABLE 4-19b ESTIMATED LEVELIZED COST REQUIREMENT OF POST COMBUSTION $NO_x$ CONTROL PROCESSES (Mills/kWh 1979)

**NON-CATALYTIC**

| Inlet $NO_x$, ppm | 300 | | | 600 |
|---|---|---|---|---|
| $NO_x$ Reduction, % | 33 | 50 | 55 | 55 |
| Outlet $NO_x$, ppm | 200 | 150 | 135 | 270 |
| Exxon - Dual Grid | 0.96 | 1.12 | 1.19 | 1.68 |
| Exxon - With $H_2$ | 0.97 | 1.18 | 1.24 | 1.85 |

**CATALYTIC**

| Inlet $NO_x$, ppm | 300 | | | 600 |
|---|---|---|---|---|
| $NO_x$ Reduction, % | 67 | 83 | 90 | 95 |
| Outlet $NO_x$, ppm | 100 | 50 | 30 | 30 |
| Kawasaki HI | 6.20 | 6.56 | 7.12 | 9.09 |
| Hitachi Zosen | 6.05 | 7.30 | 8.00 | 9.75 |
| Shell FGT* | 11.00 | 12.00 | 12.10 | 12.90 |

Accuracy; +30% - 10%
*Includes 90% Removal of 500 ppm $SO_2$
(Reference 4-31)

Combustion Modifications

The following discussion of combustion modification energy impacts was taken largely from Reference 4-33. The largest potential energy impact of combustion modifications is their effect upon boiler thermal efficiency. Another significant source of energy impact is the change in fan power requirements caused by these controls. Boiler control systems installed for low $NO_x$ operation also increase electricity and instrument air requirements, but the energy impact is usually minimal. Some discussion of the energy impacts of applied $NO_x$ controls was already presented on a boiler-by-boiler basis earlier in Section 4. As noted there, with proper engineering and implementation, there should be no major adverse energy impacts with preferred combustion modifications. A review of that analysis follows.

Applying low excess air (LEA) firing not only results in a small decrease in $NO_x$ emissions but also results in an increase in boiler efficiency through reduced sensible heat loss out the stack. For this reason the technique has gained acceptance and has become more of a standard operating procedure than a specific $NO_x$ control method in both old and new units.

The other commonly applied combustion modifications, OSC and FGR, often lead to decreases in boiler efficiency when implemented on a retrofit basis. OSC usually increases excess air requirements resulting in decreases in efficiency of up to 0.5 percent. Unburned fuel losses either due to OSC or FGR may cause a decrease in efficiency of up to 0.5 percent. If a substantial increase in reheat steam attemperation is required due to OSC or FGR, cycle efficiency losses of up to 1 percent may occur. Increased fan power requirements due to OSC or FGR will also impact efficiency, resulting in losses of up to 0.2 to 0.3 percent. No significant energy impact is expected with LNB, either retrofit or new installation.

Other combustion modification techniques, WI and RAP, can impose quite significant energy penalties on boiler operation, with decreases in efficiency from 5 to 10 percent. As a consequence, these techniques have found little acceptance.

These decreases in boiler efficiency (increases in energy consumption) discussed above for the preferred $NO_x$ control techniques (OSC, FGR, and LNB) are most likely to occur when the techniques are applied on a retrofit basis. These same combustion modifications are not expected to adversely affect unit efficiency when included in the design of a new unit. Thus, with proper engineering and development, combustion modification $NO_x$ controls can be incorporated into new unit designs with no significant adverse energy impacts.

A related problem that may occur with retrofit application of some techniques is derating of the unit. Loss in boiler load capacity due to limited coal pulverizer capacity will occur in many coal-fired boilers operated with burners-out-of-service (BOOS). Derating of 10 to 25 percent may occur For oil-fired boilers on OSC, higher excess air requirements may cause fan capacity limits to be reached in some cases. Although derating due to fan capacity is not common, reductions of up to 15 percent have been reported. With OSC and flue gas recirculation (FGR), excessive tube and steam temperatures may lead to derating, especially for gas fired boilers, and in some cases for oil-fired boilers.

Flue Gas Treatment

Estimates of the energy impacts of various dry $NO_x$ control systems and of dry and wet $SO_x/NO_x$ control systems have been presented in several sources (see References 4-31 and 4-34 through 4-38). The following discussion focuses on the direct energy impacts of FGT systems. However, many of these systems utilize chemicals such as ammonia which are energy intensive to manufacture themselves.

The energy requirements of dry SCR $NO_x$ control systems result primarily from the electrical energy required to overcome the reactor pressure drop and the compressed air and steam used for soot blowing. These requirements range from about 0.2 percent of the boiler capacity for gas-fired units to about 0.3 percent for coal-fired units.

When SCR systems are used in combination with wet FGD systems and ESPs, total flue gas cleaning energy requirements for coal-fired boilers range from about 3.5 to 4 percent of the boiler capacity. By comparison, recent estimates of the energy requirements of the Shell FGT process achieving similar control levels (90 percent control of $SO_x$ and $NO_x$) are about 5 percent of the boiler capacity (Reference 4-36). Most of this energy consumption is in the form of fuel required by the process.

Energy requirement estimates of various wet $SO_x/NO_x$ control processes are considerably higher - about 8 percent of the boiler capacity for the Moretana Calcium process, 11 percent for the Asahi process, and 19 percent for the IHI process (Reference 4-35). For the latter process, most of the energy is consumed in generating ozone.

Energy requirements for the Exxon Thermal $DeNO_x$ process have been estimated at about 0.4 percent of the boiler capacity with most of the energy consumed by the large air compressors in the ammonia storage and injection section (Reference 4-34). However, these estimates are for a lower level of $NO_x$ control (about 50 percent) than the processes described above.

Estimated energy requirements for achieving large reductions of $SO_x$ and $NO_x$ with the electron beam process range from about 3 to 4 percent of the boiler capacity (References 4-32 and 4-37). However, this process is still relatively far from commercial application.

#### 4.1.3.2 Environmental Impact

This section discusses the environmental impacts resulting or expected with various combustion modification and flue gas treatment $NO_x$ control techniques.

Combustion Modifications

The Environmental Protection Agency recently sponsored a three year evaluation of combustion modification controls for emissions of $NO_x$ and other pollutants from stationary combustion sources. Some of the results of this program included field tests of gaseous, liquid, and solid effluents from seven stationary combustion sources and estimates of environmental effects of using combustion modification control. Detailed results are presented in Reference 4-38. A few highlights pertaining to utility and industrial boilers are presented below.

Environmental assessment field testing was conducted on five boilers. Table 4-20 summarizes the key aspects of these field tests. Test results were evaluated by comparing effluent stream pollutant concentrations to discharge stream compositions desirable to preclude adverse effects to human health. In addition to $NO_x$ and $SO_2$, potentially hazardous flue gas stream pollutants include vapor phase $SO_3$ and condensed sulfate, organic acids, and trace elements such as As, Be, Cd, and V. Coal-fired sources are generally more hazardous due to these pollutants. Potentially hazardous ash stream pollutants from coal-fired sources are the trace elements Fe, Mn, Cr, Ni, Be, Ba, Pb, and occasionally As, Se, Tl, and Sn.

Conclusions evident from the field testing and analysis program were as follows.

(1) For the sources tested, the flue gas stream presents the greatest potential environmental hazard.

(2) $NO_x$ and $SO_2$ are the potentially most hazardous flue gas pollutants.

TABLE 4-20. PARTIAL SUMMARY OF EPA/ACUREX COMBUSTION MODIFICATION ENVIRONMENTAL ASSESSMENT FIELD TESTING (Reference 4-38)

| Source Category | Description | Test Points (Unit Operation) | Sampling Protocol | Test Collaborator |
|---|---|---|---|---|
| Coal-fired Utility Boiler | Kingston #6; 180 MW tangential; twin furnace, 12 burners/ furnace, 3 elevations; cyclone, 2 ESP's for particulate control | Baseline<br>Biased Firing (2)<br>BOOS (2) | Continuous $NO_x$, $SO_2$, CO, $CO_2$ $O_2$<br>Inlet to 1st ESP:<br>-- SASS<br>-- Method 5<br>-- Method 8<br>-- Gas grab ($C_1$-$C_6$ HC)<br>Outlet of 1st ESP<br>-- SASS<br>-- Method 5<br>-- Method 8<br>-- Gas grab ($C_1$-$C_6$ HC)<br>Bottom ash<br>Hopper ash (1st ESP, cyclone)<br>Fuel<br>Operating data | TVA |
| Coal-fired Utility Boiler | Crist #7; 500 MW opposed wall-fired; 24 burners, 3 elevations; ESP for particulate control | Baseline<br>BOOS (2) | Continuous $NO_x$, CO, $CO_2$, $O_2$<br>ESP Inlet<br>-- SASS<br>-- Method 5<br>-- Method 8<br>-- Gas grab ($C_1$-$C_6$ HC)<br>ESP Outlet<br>-- SASS<br>-- Method 5<br>-- Method 8<br>-- Gas grab ($C_1$-$C_6$ HC)<br>Bottom ash<br>ESP hopper ash<br>Fuel<br>Operating data<br>Bioassay | Exxon |
| Oil-fired Utility Boiler | Moss Landing #6 740 MW Opposed wall-fired; 48 burners, 6 elevations | Baseline<br>FGR<br>FGR + OFA | Continuous $NO_x$, CO, $CO_2$, $O_2$<br>-- SASS<br>-- Method 5<br>-- Method 8<br>-- Gas grab ($C_1$-$C_6$ HC)<br>Fuel<br>Operating Data<br>Bioassay | None |

Key to acronyms: (see end of table).

TABLE 4-20. (Continued)

| Source Category | Description | Test Points (Unit Operation) | Sampling Protocol | Test Collaborator |
|---|---|---|---|---|
| Coal-fired Industrial Boiler | Traveling grate spreader stoker, 38 kg/s (300,000 lb steam/hr) | Baseline<br>LEA + high OFA | Continuous $NO_x$, CO, $CO_2$, $O_2$<br>Boiler exit:<br>-- SASS<br>-- Method 5<br>-- Shell-Emeryville<br>-- Gas grab ($C_1$-$C_6$ HC)<br>ESP outlet<br>-- SASS<br>-- Method 5<br>-- Shell-Emeryville<br>-- Gas grab ($C_1$-$C_6$ HC)<br>Bottom ash<br>Cyclone hopper ash<br>Fuel<br>Operating Data | KVB |
| Coal-fired Industrial Boiler | Traveling grate spreader stoker, 25 kg/s (200,000 lb steam/hr), ESP for particulate control | Baseline<br>LEA | Continuous $NO_x$, CO, $CO_2$, $O_2$<br>Boiler exit:<br>-- SASS<br>-- Method 5<br>-- Shell-Emeryville<br>-- Gas grab ($C_1$-$C_6$ HC)<br>ESP outlet<br>-- SASS<br>-- Method 5<br>-- Shell-Emeryville<br>-- Gas grab ($C_1$-$C_6$ HC)<br>Bottom ash<br>ESP hopper ash<br>Fuel<br>Operating Data<br>Bioassay | KVB |

Key to acronyms:

BOOS: Staged combustion technique with burners out of service.
ESP: Electrostatic precipitator.
FGR: Flue gas recirculation through burner windbox.
LEA: Low excess air firing.
OFA: Staged combustion with overfire air injection.
SASS: Source assessment sampling system for organic and inorganic emission collection and measurement.

(3) The total flue gas hazard is decreased or, at worst, does not increase with applying the combustion modifications tested. Changes in emissions due to day-to-day fuel composition changes are often of greater magnitude than those attributable to $NO_x$ control.

(4) The effluent streams from the sources tested are not mutagenic, and, in general, elicit nondetectable toxicity in bioassay testing.

(5) The combustion modifications tested:

- -- Have no effect, or increase only slightly, emissions of CO and vapor phase hydrocarbon;
- -- Have no effect on particulate mass emissions;
- -- Have no effect, or tend to increase slightly, emitted particle size distribution;
- -- Have no measurable effect on inorganic trace element emissions or on trace element partitioning tendencies;
- -- Have no effect, or decrease slightly $SO_3$ and particulate sulfate emissions;
- -- Have little effect on total higher molecular weight organic emissions; and
- -- Marginally increase POM emissions; however, emission levels remained on the order of the detection levels of the instrument.

(6) Emissions of many organic priority pollutants were below the detection limit for the sources tested.

It was further concluded in the program that the $NO_x$ control methods investigated are environmentally sound since the potential adverse impact of the controlled source is either decreased or unchanged with $NO_x$ control applications. However, it should be pointed out that these conclusions are based on short term tests conducted under steady operating conditions, and that the controls tested were the relatively straight forward, current technology combustion modifications.

Flue Gas Treatment

Since FGT processes have been less extensively applied than combustion modifications, their environmental impacts have been less extensively tested. However, the principal impacts expected can be qualitatively assessed. The following discussion presents some assessments of these impacts and the results of some pilot unit testing sponsored by EPA. The discussion focuses primarily on SCR processes since these are the most extensively developed and applied FGT processes.

The principal impacts expected to result from the application of SCR processes are as follows. $NO_x$ emissions in the flue gas are reduced considerably, but some emissions of ammonia and ammonium compounds will result and some increases in $SO_3$ or other compounds are possible. Also, in some cases wastewater treatment and disposal may be complicated by the addition of nitrogen containing compounds. An additional impact with catalytic systems is the need for catalyst disposal.

By way of comparison, SNR processes are less efficient at removing $NO_x$ from the flue gas. And the increased ammonia injection levels will result in greater emissions of ammonia and ammonium compounds than the SCR processes, potentially leading to greater wastewater impacts as well. However, these processes will not likely increase flue gas $SO_3$ levels and they are not faced with the need for catalyst disposal.

In a recent report covering a survey of SCR systems in Japan (Reference 4-39), Jones evaluates potential SCR environmental impacts as follows. $NO_x$ emissions from boilers utilizing catalytic de-$NO_x$ are generally reduced by 80 percent. Higher reductions are possible, but costs will be greater for these units. $NH_3$ emissions for oil- and gas-fired applications are reported to be about 3 to 10 ppm. Emissions from full-scale, coal-fired facilities will not be known until after the start-up of several units currently under construction. In addition to concern about $NH_3$ emissions, there is some concern that other compounds, such as cyanides, nitrosoamines and nitrates, may also be emitted. SCR system vendors and operators, however, were not aware of any instances where compounds such as these were emitted. The possibility of a visible ammonium sulfite plume resulting from $NH_3$ emissions entering a downstream, wet FGD system may be a problem if the slip $NH_3$ is high (>50 ppm). Plumes of ammonium sulfite are known to occur during certain atmospheric conditions when $NH_3$ based FGD systems are used. However, the Japanese have experience with situations in which 10 ppm of $NH_3$ enters the scrubber and, based on this experience, do not feel that SCR systems will cause visible plume formation.

Jones goes on to discuss other potential environmental impacts including nitrogen compounds in the wastewater and catalyst disposal. $NH_3$ can enter the wastewater through the FGD system or from air preheater washwater. In locations where discharge of this water will cause problems, an activated sludge technique can be used to treat the wastewater. In other locations it may be possible to blend wastewater containing $NH_3$ with other water discharges. The catalyst disposal issue has not been fully addressed. While the process vendors indicate that they will dispose of spent catalyst, the specific method of disposal had not been identified at the time of the survey. This is partially due to the fact that none of the full scale systems had required a catalyst change.

As discussed earlier in Section 4, EPA recently sponsored pilot plant tests of two SCR processes applied to coal-fired utility boilers. These included the Hitachi Zosen and Shell Flue Gas Treatment processes. As part of the pilot plant tests, EPA conducted a sampling program designed to quantify process emissions of pollutants other than $NO_x$ and $SO_2$. The test and evaluation program is discussed in Reference 4-13. Parts of that discussion, pertaining to the environmental impacts of these processes, are presented below.

The objective of the sampling program was to determine if any adverse flue gas concentration impacts can result from application of SCR technology to a coal-fired source. Samples were collected at the inlet and outlet of the pilot plant reactors and analyzed for selected pollutants. Inlet and outlet samples were collected simultaneously, so that measured differences in pollutant concentration were due to changes across the reactors.

Table 4-21 identifies the specific pollutants measured and presents the results of the sampling program. As shown, the concentrations of some pollutants changed across the reactor while others did not. And in some cases, the concentrations of pollutants were below the detection limits of the analytical techniques employed during the sampling program.

As illustrated in Table 4-21, concentrations of hydrogen cyanide and nitrosoamines at the outlet of the pilot plant reactors were below the detection limits of the analytical techniques employed. For hydrogen cyanide, the detection limit is equivalent to 10 ppb and for nitrosoamines a maximum of 2 ppb (the actual concentration level depends on the nitrosoamine compound(s) present).

TABLE 4-21. MEASURED CHANGE IN THE CONCENTRATIONS OF SELECTED POLLUTANTS ACROSS THE EPA PILOT PLANT SCR REACTORS (Reference 4-13)

| Pollutant | Hitachi Zosen Pilot Plant | | Shell Flue Gas Treatment Pilot Plant | |
|---|---|---|---|---|
| | Reactor Inlet Concentration | Reactor Outlet Concentration | Reactor Inlet Concentration | Reactor Outlet Concentration |
| Hydrogen Cyanide[a] | <10 $\mu g/m^3$ | <10 $\mu g/m^3$ | <10 $\mu g/m^3$ | <10 $\mu g/m^3$ |
| Nitrosoamines[a] | <5 $\mu g/m^3$ | <5 $\mu g/m^3$ | <5 $\mu g/m^3$ | <5 $\mu g/m^3$ |
| Carbon Monoxide | <0.017% | <0.017% | 0.13% | <0.017% |
| Hydrocarbons ($C_1$ - $C_6$) | <1.0 ppmv | <1.0 ppmv | 28.5 ppmv | 21.0 ppmv |
| Sulfur Trioxide | 8.4 ppmv | 20.7 ppmv | 11.4 ppmv | 0.1 ppmv |
| Ammonia | 0 | 54.8 ppmv | 0 | 15.3 ppmv |

[a]Gas volume taken at 15.5°C, 1 atm, dry basis.

At the Hitachi Zosen plant, the concentrations of both CO and hydrocarbons were also below the detection limits of the analytical techniques. But at the Shell FGT pilot plant, the concentrations of these compounds were found to decrease across the reactor. This decrease represents an environmental benefit for the Shell process, and it is believed to result from oxidation of these compounds in the reactor. It should be noted that the Hitachi Zosen reactor may also oxidize CO and hydrocarbons, but no conclusions can be drawn since those compounds were present in such low concentrations.

One of the most significant results of the emissions sampling program was the effect of the Hitachi Zosen and Shell processes on the concentration of $SO_3$ in the flue gas. As shown in Table 4-21, $SO_3$ was produced in the Hitachi Zosen pilot plant reactor while the Shell FGT process removed $SO_3$ from the gas stream. These results are significant because of the effects $SO_3$ can have on equipment located downstream of an SCR reactor, especially the air preheater.

Another significant result of the emissions sampling program is the measured $NH_3$ emissions from the processes. As shown in Table 4-21, $NH_3$ emissions from the Hitachi Zosen process were over three times greater than the emissions from the Shell FGT process even though the $NH_3/NO_x$ injection ratio was higher at the Shell pilot plant. The higher $NH_3$ emissions are due to the fact that the catalyst used in the Shell process promotes $NH_3$ oxidation while essentially no $NH_3$ oxidation occurred in the Hitachi Zosen process.

## 4.2 INDUSTRIAL BOILERS

Industrial boilers are a very common piece of equipment in industrial plants. These boilers typically range in size from 3 to 250 MW thermal input (10 to 850 x $10^6$ Btu/hr) and include a wide variety of firing types and fuels. In 1980 industrial boilers represented the second largest stationary source of $NO_x$ emissions, preceded only by electrical utility boilers (See Chapter 2). Nationwide $NO_x$ emissions from industrial boilers were estimated to be 3 Tg (3.3 x $10^6$ tons) annually.

Industrial boilers are typically classified by the type of firing mechanism employed, the heat transfer mechanism, and the type of fuel fired. Firing mechanisms include either burners, spreader-fed, or mass-fed. With burners, the fuel is injected into the boiler through a nozzle and burns while suspended within the boiler combustion chamber. Mass-fed and spreader-fed boilers are

used for most solid fuel industrial boilers. They combust the fuel on a grate in the boiler.

Watertube is the most common mechanism used for heat transfer in industrial boilers. In watertube boilers the water for steam generation is contained in banks of tubes suspended in the boiler combustion chamber and flue. Firetube boilers invert this configuration and pass hot flue gases through tubes suspended in a water drum. Firetube boilers are seldom sized larger than 7.3 MW ($25 \times 10^6$ Btu/hr) thermal input (Reference 4-40).

Industrial boilers are fired with a wide variety of fossil and nonfossil fuels. Most common among the fossil fuels are natural gas, accounting for 43 percent of the fossil fuel-fired industrial boiler capacity, followed by fuel oil and coal comprising 32 percent and 25 percent, respectively. Nonfossil fuels fired in industrial boilers include wood, bark, agricultural waste, municipal waste, and industrial waste; the most common being wood and bark. Nonfossil fuels account for less than 5 percent of the industrial boiler capacity.

The following discussion on $NO_x$ emission control techniques for industrial boilers will focus on fossil fuel-fired boilers below 73 MW ($250 \times 10^6$ Btu/hr) in size. Those boilers greater than approximately 73 MW are essentially identical to utility boilers and are able to apply the same $NO_x$ emission control technologies that are addressed in Section 4.1. Additionally, non-fossil fuels generally exhibit relatively low $NO_x$ emissions with respect to solid fuels resulting in a lack of demonstrated $NO_x$ emission control technologies for non-fossil fuels (Reference 4-41). The population distribution of U.S. fossil-fired watertube boilers by size range is presented in Table 4-22. The corresponding material for U.S. firetube boilers is presented in Table 4-23.

### 4.2.1 Control Techniques

Currently, the most promising $NO_x$ control options for industrial boilers include combustion modification and post combustion techniques. The former has been the most successful and widely used option, and is described below for gas-, oil- and coal-fired units. The post combustion techniques are discussed after combustion modification and are currently being demonstrated for some industrial boiler applications.

TABLE 4-22. INSTALLED CAPACITY OF U.S. WATERTUBE INDUSTRIAL BOILERS BY UNIT SIZE AND FUEL TYPE (IN 1977)

(MW Thermal Input ($10^6$ Btu/hr))

| Fuel | Capacity by unit size | | | | | |
|---|---|---|---|---|---|---|
| | (0 to 2.9<br>(0 to 10) | 2.9 to 14.7<br>(10 to 50) | 14.7 to 29.3<br>(50 to 100) | 29.3 to 73.3<br>(100 to 250) | >73.3<br>(>250) | Totals |
| Pulverized coal | 0<br>(0) | 0<br>(0) | 0<br>(0) | 19,895<br>(67,800) | 40,180<br>(137,000) | 60,075<br>(204,800) |
| Spreader-stoker coal | 70<br>(240) | 4,650<br>(15,900) | 6,175<br>(21,060) | 20,295<br>(69,000) | 11,010<br>(37,600) | 42,200<br>(143,800) |
| Underfeed-stoker coal | 680<br>(2,300) | 14,105<br>(48,000) | 17,265<br>(58,900) | 7,000<br>(24,200) | 5,230<br>(17,800) | 44,360<br>(151,200) |
| Overfeed-stoker coal | 85<br>(290) | 3,470<br>(11,800) | 4,455<br>(15,200) | 3,555<br>(12,100) | 3,510<br>(12,000) | 15,075<br>(51,390 |
| Total Coal | 835<br>(2,830) | 22,225<br>(75,700) | 27,895<br>(95,160) | 50,825<br>(173,100) | 59,930<br>(204,400) | 161,710<br>(551,190) |
| Residual oil | 3,960<br>(13,500) | 48,190<br>(164,000) | 36,640<br>(122,000) | 44,790<br>(153,000) | 43,570<br>(148,600) | 176,150<br>(601,100) |
| Distillate oil | 2,560<br>(8,700) | 8,280<br>(28,200) | 4,295<br>(14,600) | 6,370<br>(21,700) | 4,085<br>(13,900) | 25,590<br>(87,100) |
| Total Oil | 6,520<br>(22,200) | 56,470<br>(192,200) | 39,935<br>(136,600) | 51,160<br>(174,700) | 47,655<br>(162,500) | 201,740<br>(688,200) |
| Natural gas | 4,475<br>(15,300) | 57,900<br>(197,500) | 53,585<br>(182,800) | 63,320<br>(216,000) | 95,935<br>(327,200) | 275,215<br>(938,800) |
| Total all fuels | 11,830<br>(40,330) | 136,595<br>(465,560) | 121,415<br>(414,560) | 165,305<br>(563,800) | 203,520<br>(694,100) | 638,665<br>(2,178,190) |

Reference 4-40.

TABLE 4-23. INSTALLED CAPACITY OF U.S. INDUSTRIAL FIRE-TUBE BOILERS BY UNIT SIZE AND FUEL TYPE (1977)

(MW Thermal Input ($10^6$ Btu/hr))

| Fuel | Unit Capacity, MW Thermal ($10^6$ Btu/h) | | | | |
|---|---|---|---|---|---|
| | 0.1 to 0.4 (0.4 to 1.5) | 0.4 to 2.9 (1.5 to 10) | 2.9 to 7.3 (10 to 25) | 7.3 to 14.7 (25 to 50) | Totals |
| Coal | 1,690 (5,700) | 3,960 (13,500) | 4,950 (16,900) | 2,830 (9,600) | 13,430 (45,700) |
| Residual Oil | 8,960 (30,600) | 26,320 (89,800) | 19,280 (65,800) | 6,580 (22,500) | 61,140 (208,700) |
| Distillate Oil | 4,160 (14,200) | 13,610 (46,400) | 11,760 (40,200) | 4,010 (13,700) | 33,540 (114,500) |
| Natural Gas | 15,420 (52,600) | 43,700 (149,100) | 37,270 (127,200) | 9,230 (50,700) | 111,250 (379,600) |
| Total All Fuels | 30,230 (103,100) | 87,590 (298,800) | 73,260 (250,100) | 28,280 (96,500) | 219,360 (748,500) |

Reference 4-40.

#### 4.2.1.1 Combustion Modification

Combustion modification control techniques reduce the formation of $NO_x$ emissions by altering the combustion conditions present in the combustion chamber. These techniques include modifications to the fuel and combustion air feed systems, and modifications to the combustion chamber design.

One of the most extensive sets of data on combustion modification technique performance was derived in an EPA-sponsored study involving the testing of 65 boilers. Ten different combustion modification techniques were implemented resulting in a total of 116 test runs. The effects of these techniques on $NO_x$ emissions and boiler efficiency are summarized in Figure 4-2 for 73 separate boiler tests (Reference 4-42).

The graph is divided into quadrants. The criterion for the best quadrant is that the modification technique should simultaneously reduce $NO_x$ and increase efficiency. In general, the study showed that total $NO_x$ emission reductions of up to 47 percent were possible by using one or a combination of five different methods. These methods were: excess air reduction, burner out of service, flue gas recirculation, overfire air addition, and reduced air preheat. In the first three methods boiler efficiency was generally unimpaired.

Since the original combustion modification study, the EPA has continued to study all of the above techniques and several newly developed techniques. The most promissing of the recently developed $NO_x$ combustion modification techniques is low $NO_x$ burners for oil- and gas-fired boilers.

Tables 4-24 and 4-25 summarize the results of EPA's studies on the performance of combustion modification techniques on gas-, oil-, and coal-fired boilers. The remainder of this section is devoted to the discussion of combustion modification experience on these boilers, including control efficiency, operational problems, and applicability.

<u>Gas- and Oil-Fired Boilers</u>

Combustion modification controls have been most successful in the reduction of $NO_x$ emissions from gas- and oil-fired industrial boilers. In large part, this success can be attributed to the greater flexibility of fluid fuels with respect to alterations in fuel firing conditions.

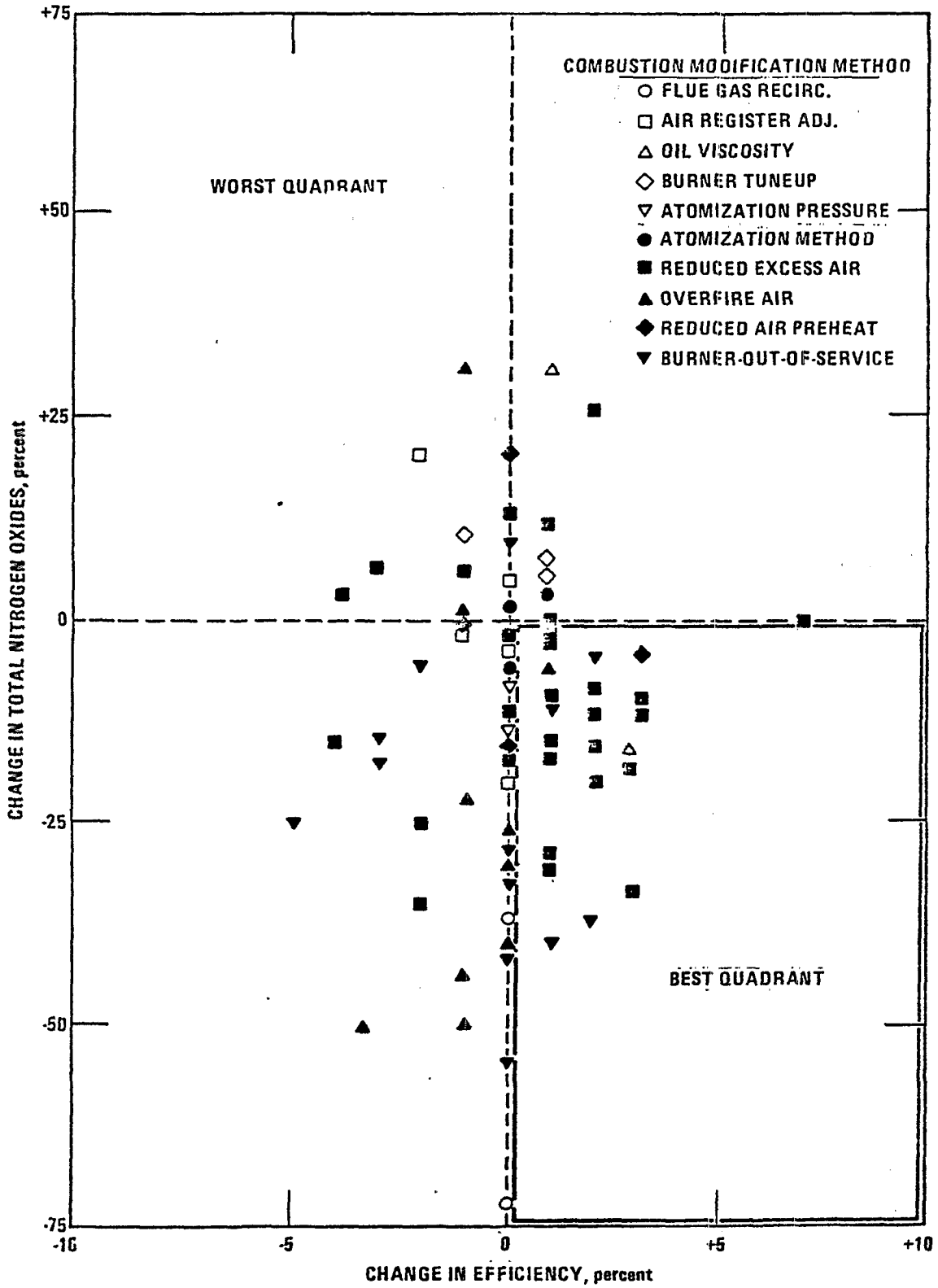


Figure 4-2. Effect of combustion modification methods on total nitrogen oxides emissions and boiler efficiency (Reference 4-42.)

TABLE 4-24. $NO_x$ EMISSION CONTROL TECHNIQUES FOR GAS-FIRED AND OIL-FIRED INDUSTRIAL BOILERS

| | | Effectiveness (% $NO_x$ Reduction) | Operational Impact | Applicability | Commercial Availability/R & D Status |
|---|---|---|---|---|---|
| Low Excess Air (LEA) | | (Gas) 0-30<br>(d. oil) 0-30<br>(r. oil) 0-20 | Increased boiler efficiency | Applicable to all gas and oil industrial boilers. Generally stack $O_2$ can be reduced to 1-2% for gas, 2% for dist. oil, and 3% for resid. oil. Developing burners will allow lower stack $O_2$. | Method well demonstrated and control equipment commercially available for all boiler types. |
| Staged Combustion Air (SCA) | Over-Fire Air Ports (OFA) | (Gas) 25-45<br>(d. oil) 20-40<br>(r. oil) 20-50 | Slight decrease in boiler efficiency of 0 to 3%. The decrease can be mitigated in part with the combined use of LEA controls. | Applicable to all gas and oil industrial boilers. Generally 70%-90% burner stoichiometries can be used with proper installation of secondary air ports. | Best implemented on new units. Not commercially available for all design types especially fire tubes. Retrofit not feasible for most units, especially packaged units. |
| | Burners Out of Service (BOOS) | (Gas) 25-45<br>(d. oil) N/A<br>(r. oil) 10-40 | Perhaps slight decrease in boiler efficiency. The decrease can be mitigated with the combined use of LEA controls. May require derating unless fuel delivery system is modified. | Applicable only to multi-burner boilers. Best suited to square burner pattern. | Commercially available. Retrofit application only. Not demonstrated for distillate oil. |
| Low-$NO_x$ Burners (LNB) | | 20-50 | May potentially require larger fire box area. Retrofit application may require derating due to larger flame pattern. | New burners described generally applicable to all boilers. More specific information needed. | Commercially offered for burner sizes up to 150 x $10^6$ Btu/hr. Only demonstrated for a limited range of boiler types at this time. |
| Flue Gas Recirculation (FGR) | | (Gas) 45-75<br>(d. oil) 40-70<br>(r. oil) 15-20 | Possible flame instability and fan errosion problems which can be reduced with proper engineering. | Applicable to all design types except gas ring burners. | Commercially available for most boiler types but best suited for new boilers because retrofit would result in possibly extensive modifications. |
| Reduced Air Preheat (RAP) | | (Gas) up to 55%<br>(d. oil) up to 45%<br>(r. oil) up to 20%<br>Depending on amount of preheat. | Significant loss in boiler efficiency unless compensated for by use of feed water economizer. | Applicable to all design types. | Commerically available but best suited to new boilers where designs can be modified to include feed water economizers. |
| Ammonia Injection | | 40-70% | Possible implementation problems: fouling and corrosion problems with high sulfur oils. Close operator attention required. | Appears most applicable to gas and low sulfur oils. | Commercially available but very limited demonstration (in Japan only.) Best suited to base load boilers. |
| Selective Catalytic Reduction (SCR) | | 70-90 | No impact on efficiency. Fouling and corrosion problems with high sulfur oils due to ammonium sulfate salts. Close operator attention required. | Appears applicable to all gas- and oil-fired boilers, although high sulfur oils may pose greater operational problems. | Commercially available but limited demonstration (in Japan only.) |

TABLE 4-25. $NO_x$ EMISSION CONTROL TECHNIQUES FOR COAL-FIRED STOKER INDUSTRIAL BOILERS

| | Effectiveness (% $NO_x$ Reduction) | Operational Impact | Applicability | Commercial Availability/R & D Status |
|---|---|---|---|---|
| Low Excess Air (LEA) | 5-25 | Increased boiler efficiency. Close operator attention required to prevent grate overheating and clinker formation. | Applicable to all stokers. Generally stack $O_2$ can be reduced to 4-6%. | Commercially available and performance well demonstrated. Minimum $O_2$ level may not be identified for some boiler types. |
| Staged Combustion Air (SCA) | not well defined | Possible some decrease in efficiency. Close operator attention required to prevent grate overheat and clinker formation. | Most stokers already equipped with OFA ports. | Commercially available but further research required to identify optimum OFA port position and performance levels. |
| Reduced Air Preheat (RAP) | 8 | Significant loss in boiler efficiency unless compensated for by use of feedwater economizers. | Applicable to boilers with combustion air preheaters. | Commercially available but not significantly effective. Best suited for new boilers where design can be modified to include feedwater economizers. |
| Ammonia Injection | 40-60 | Possible implementation difficulties, fouling problems with high sulfur fuels, load restrictions. Close operator attention required. | Appears most applicable to low sulfur fuels. | Commercially available but not demonstrated on stoker boilers. |
| Selective Catalytic Reduction (SCR) | 70-90 | No impact on efficiency. Fouling and corrosion problems with high sulfur coals due to ammonium sulfate salts and fly ash. Close operator attention required. | Appears applicable to coal-fired boilers. | Commercially available, but very limited demonstration in Japan only. Significant questions persist about operational problems on coal-fired boilers. |

Low Excess Air - Low excess air (LEA) operation has proven to be extremely effective in lowering $NO_x$ emissions from gas and distillate oil-fired industrial boilers. As discussed in Chapter 3, LEA controls are most effective in reducing thermal-$NO_x$ emissions, which compose the major fraction of the $NO_x$ emissions from these two fuels.

An EPA study of 213 gas-fired, 60 distillate-fired, and 148 residual-fired boilers revealed that $NO_x$ emissions from these sources could be related to the quantity of excess air present using the following correlations (Reference 4-43):

$$E_g = 0.079\ H^{0.20}\ T^{1.11}\ A^{0.17}$$

$$E_{do} = 0.32\ H^{0.46}\ T^{0.31}\ A^{0.29}$$

$$E_{ro} = 24.2\ T^{0.34}\ A^{0.24} + 1.055\ N^{1.06}$$

where $E_g$ = total $NO_x$ emissions for gas combustion adjusted to 3 percent $O_2$ and dry basis (ppm)

$E_{do}$ = total $NO_x$ emissions for distillate oil combustion adjusted to 3 percent $O_2$ and dry basis (ppm)

$E_{ro}$ = total $NO_x$ emissions from residual oil combustion adjusted to 3 percent $O_2$ and dry basis (ppm)

H = combustion zone heat release rate ($10^3$ Btu/hr - $ft^2$)

T = combustion air preheat temperature °R

A = flue gas oxygen concentration (mole fraction)

N = fuel nitrogen content (lb N/$10^6$ Btu)

These correlations are presented in Figure 4-3 as a plot of flue gas $O_2$-vs-$NO_x$ for natural gas, distillate oil, and a 0.3 wt percent nitrogen residual fuel oil.

Based on these correlations, reducing excess air from a typical flue gas $O_2$ level of 5 percent down to 1 percent in a gas-fired boiler will result in a $NO_x$ emission reduction of 24 percent. Correspondingly, a reduction in excess air from a flue gas $O_2$ level of 5 percent down to 2 percent in a distillate oil-fired boiler will reduce $NO_x$ emissions by 23 percent. Residual oil-fired boilers with their characteristically high fuel $NO_x$ emissions exhibit a much lower reduction with LEA controls. Reducing excess air from a typical flue gas $O_2$ level of 6 percent down to 3 percent in a residual oil-fired boiler combusting a 0.3 wt percent nitrogen oil will result in a $NO_x$ emission reduction of only 6 percent. Table 4-26 presents both the typical and the minimum flue gas $O_2$ levels applicable to gas- and oil-fired boilers.

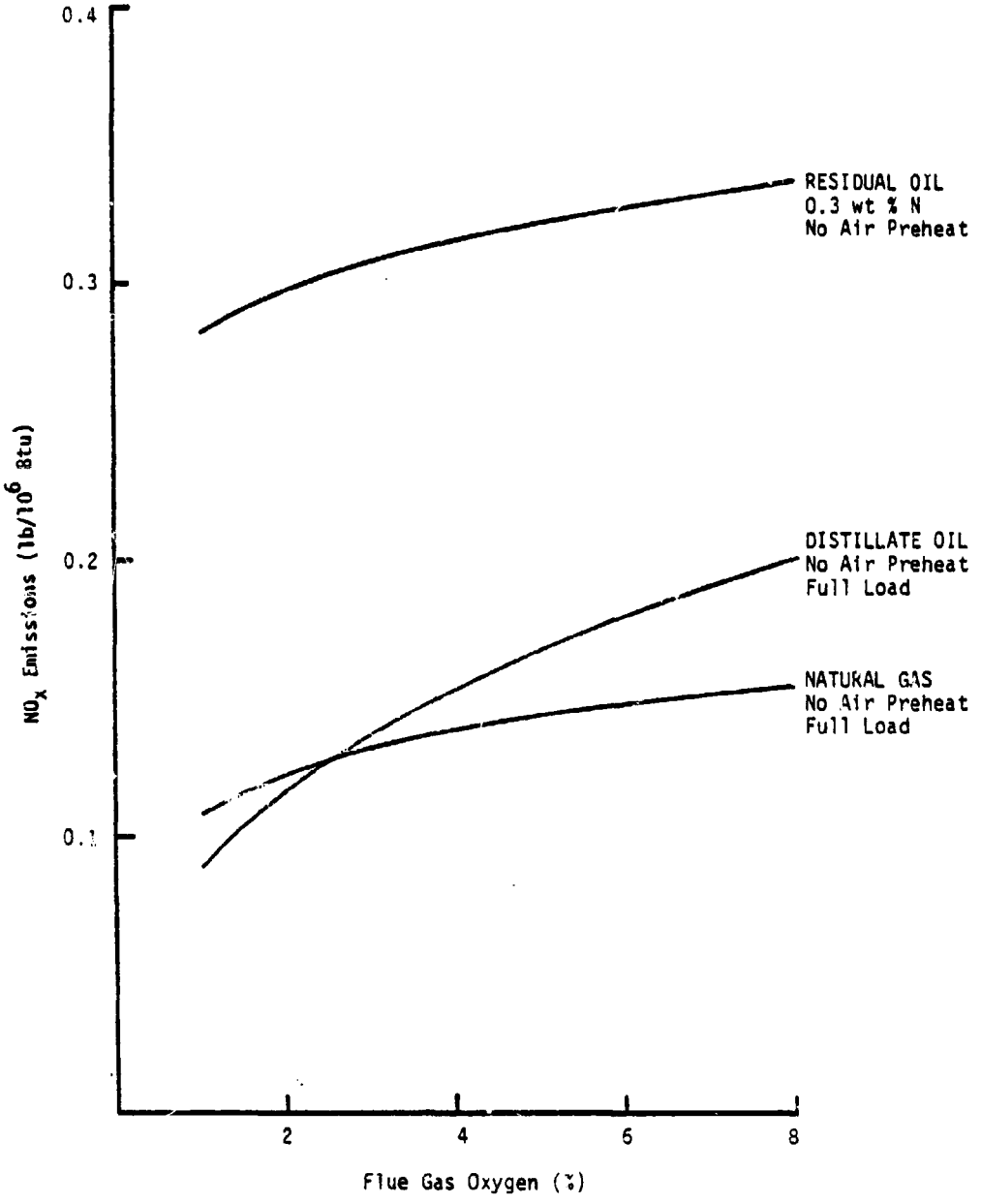


Figure 4-3. Effects of flue gas oxygen on the formation of $NO_x$ emissions from gas- and oil-fired boilers (Reference 4-43).

TABLE 4-26. SAFE OPERATING LEVELS FOR LEA (Reference 4-45)

| FUEL/FIRING TYPE | MINIMUM FLUE GAS $O_2$ (percent) | TYPICAL FLUE GAS $O_2$ (percent) |
|---|---|---|
| Natural Gas | 0.5 - 3 | 4 - 8 |
| Distillate and Residual Oil | 2 - 4 | 4 - 8 |

EPA studies of LEA controls concluded that these controls can be applied to some degree on all gas- and oil-fired boilers. However, the lowest excess air levels can be achieved with newer LEA burners which incorporate design features permit complete fuel combustion at very low air levels. These studies also recommend the use of oxygen trim systems as an integral part of all LEA control system to maintain a minimum but safe excess air level. If air levels are allowed to drop too low, incomplete combustion can occur, resulting in increased emissions of hydrocarbons, carbon monoxide, and smoke (Reference 4-44).

Staged Combustion Air (SCA) - These controls reduce $NO_x$ emissions by selectively staging the introduction of combustion air into the combustion zone. On gas- and oil-fired boilers staged combustion air (SCA) controls can be employed by two techniques, burners-out-of-service (BOOS) and overfire air ports (OFA). These techniques are described in Chapter 3.

EPA conducted a study of five watertube gas-fired boilers, four of which were equipped with combustion air preheat. Without SCA controls the $NO_x$ emissions from these boilers ranged from 103 to 142 ng/J (24 to 33 lb/$10^6$ Btu) and averaged 120 ng/J (28 lb/$10^6$ Btu). With the application of SCA controls, the $NO_x$ emissions from these boilers ranged from 60 to 129 ng/J (14 to 30 lb/$10^6$ Btu) and averaged 82 ng/J (19 lb/$10^6$ Btu). These data demonstrate an average emission reduction of 33 percent (Reference 4-46).

An EPA study of a firetube boiler combusting natural gas documented a 25 percent reduction in $NO_x$ emissions using SCA controls. This reduction was achieved with a burner air stoichiometry of 90 percent and a flue gas oxygen concentration of 2.9 percent (Reference 4-47).

SCA controls demonstrate their greatest $NO_x$ emission reduction efficiencies on residual oil-fired boilers because of their high effectiveness on fuel-$NO_x$ emissions. EPA studies on two packaged watertube boilers firing residual oil documented $NO_x$ emission reductions of 40-45 percent using OFA ports to achieve SCA controls (Reference 4-48). Numerous tests on field-erected watertube boilers firing residual oil documented $NO_x$ emission reductions of 25-40 percent (References 4-42 and 4-49). This latter set of boilers used BOOS techniques to achieve SCA controls.

Very little data is available on the performance of SCA controls on distillate oil-fired boilers, or on residual oil-fired firetube boilers.

Operational impacts of SCA controls include possible flame stability problems and boiler derating for retrofit applications. Flame stability problems can be mitigated by the proper location of OFA ports and by the use of commercially available air flow controls which maintain the required staged air injection and burner combustion air flowrates throughout the boiler load range (Reference 4-50).

With retrofit applications where BOOS controls are being applied, some boiler derating may occur due to the size limit of the burners which remain in service. This problem can generally be eliminated by the installation of larger burners and by modification of the air registers to allow greater air supply to the burners remaining in service (Reference 4-44).

Flue Gas Recirculation - A third technique for $NO_x$ control by combustion modification is flue gas recirculation (FGR). This technique involves extracting a portion of the flue gas and returning it to the furnace through the burner windbox. FGR suppresses $NO_x$ formation by diluting the $O_2$ level in the combustion zone and by reducing peak flame temperatures with the heat absorptive capacity of the recirculated gas. FGR primarily reduces thermal $NO_x$ and is, consequently, most effective when applied to gas- and distillate-fired boilers.

EPA sponsored FGR tests on two gas-fired watertube industrial boilers. On a 73 MW ($250 \times 10^6$ Btu/hr) boiler $NO_x$ emissions were reduced an average of 70 percent at a flue gas recirculation rate of 45 percent (Reference 4-47). The second test was conducted on a 5 MW ($17 \times 10^6$ Btu/hr) boiler and achieved an average 75 percent $NO_x$ emission reduction with a 20 percent flue gas recirculation rate (Reference 4-48).

FGR controls demonstrated similar $NO_x$ emission reduction capabilities on two long-term tests conducted by EPA, reaching a maximum control efficiency of 70 percent (Reference 4-48).

The results of a multi-fuel test on a 5.1 MW (17.5 x $10^6$ Btu/hr) packaged watertube boiler are presented in Figure 4-4. This series of tests demonstrates both the relative performance of FGR controls on various fuels as well as the impact of varying the flue gas recirculaton rate. The greater impact of FGR on $NO_x$ emissions from gas and distillate oil combustion is clearly demonstrated in these results. More specifically, these test data showed that when firing natural gas, FGR reduced $NO_x$ emissions from 28 ng/J (0.07 lb/$10^6$ Btu) at normal operating conditions to an average of 13 ng/J (0.03 lb/$10^6$ Btu). These data for gas combustion represent a $NO_x$ emission reduction of 53 percent. When the same boiler was tested combusting a 0.14 percent nitrogen residual fuel oil, FGR only reduced $NO_x$ emissions from a LEA emission level of 95 ng/J (0.22 lb/$10^6$ Btu) to a FGR emission level of 78 ng/J (0.18 lb/$10^6$ Btu). (References 4-42 and 4-46).

There are two operational problems associated with the application of FGR controls; flame stability problems and errosion of the recirculation fan blades. Flame stability problems will necessitate the use of different burner configurations and the use of flame sensors to detect the onset of instability problems. Proper fan design will reduce fan problems. It has also been observed that FGR controls may not be easily retrofitted to small industrial boilers due to space limitations on the extra ducting requirements (Reference 4-44).

Reduced Air Preheat - By reducing the amount of preheating applied to combustion air, a reduction of the peak flame temperature can be achieved in the combustion zone. This reduction in turn lowers thermal $NO_x$ production. Most industrial watertube boilers with design heat input capacities greater than 15 MW (50 x $10^6$ Btu/hr) recover some flue gas heat in combustion air preheaters or feedwater economizers to maximize thermal efficiency (Reference 4-42). The installation of an economizer to replace or reduce the use of a combustion air preheater will result in lower peak temperatures while still allowing for effective flue gas heat recovery (Reference 4-51). Lowering peak temperature is primarily effective for reducing thermal $NO_x$, but has little effect on fuel $NO_x$. Hence, the technique of reduced combustion air preheat will result in higher percent reductions for low nitrogen fuels -- distillate oil and natural gas (Reference 4-52).

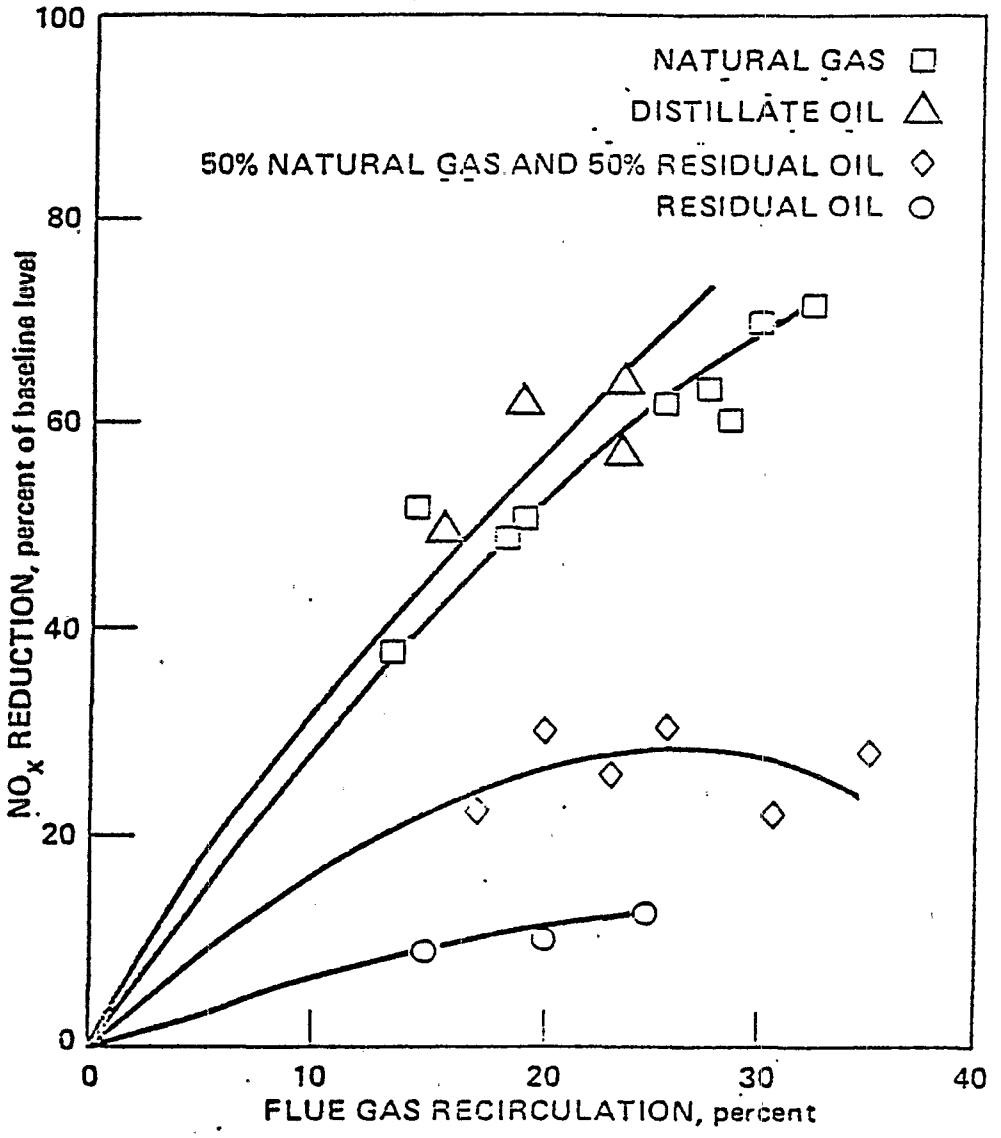


Figure 4-4. FGR test results on a 5.1 MW (17.5 x $10^6$ Btu/hr) packaged watertube boiler. (No air preheat) (Reference 4-42).

The impact of combustion air temperature on a typical gas-, distillate oil-, and residual oil-fired boiler is presented in Figure 4-5. These correlations were developed from the study of over 400 short-term tests on industrial watertube boilers. The results of this study conclude that a 222°C (400°F) reduction in combustion air preheat would reduce $NO_x$ emissions from natural gas combustion by 44 percent, from distillate oil combustion by 33 percent, and from residual oil combustion by 7 percent. Within the data base used in this study, combustion air preheat temperatures typically ranged from 149°C (300°F) up to 360°C (680°F) (Reference 4-43).

Although RAP is applicable to all gas- and oil-fired boiler types it may pose a significant energy penalty for certain applications. New boiler applications can generally recover waste flue gas heat by use of feed water economizers. However, situations do exist where feed water temperatures are returned to the boiler at temperatures too high to make the use of feed water economizers practical. In many retrofit applications, feed water economizers are not already in place, and the retrofit of feed water economizers is not practical for most industrial boilers (Reference 4-43).

Low $NO_x$ Burners (LNB) - New burner designs are being developed for industrial boilers which alter the mixing of air, fuel, and combustion products within the burner flame zone to reduce $NO_x$ emissions. At this time LNB controls have seen very limited application, and are commercially available for only a limited range of industrial boiler types.

In a 30-day test of a 30 MW gas-fired boiler, LNB controls reduced $NO_x$ emissions from 113 ng/J (0.26 lb/$10^6$ Btu) down to 33 ng/J (0.08 lb/$10^6$ Btu) under full load conditions. When tested at partial load conditions, LNB controls reduced $NO_x$ emissions from 95 ng/J (0.22 lb/$10^6$ Btu) down to 44 ng/J (0.10 lb/$10^6$ Btu). These results demonstrate a 70 percent $NO_x$ emission reduction at full load and a 54 percent $NO_x$ emission reduction at partial loads (Reference 4-53).

Preliminary vendor test results indicate that in typical boiler applications LNB controls will achieve a 30-50 percent reduction in $NO_x$ emissions from distillate oil- and gas-fired boilers and a 17-23 percent reduction in $NO_x$ emissions from heavy residual oil combustion (.3 wt % N) (Reference 4-54).

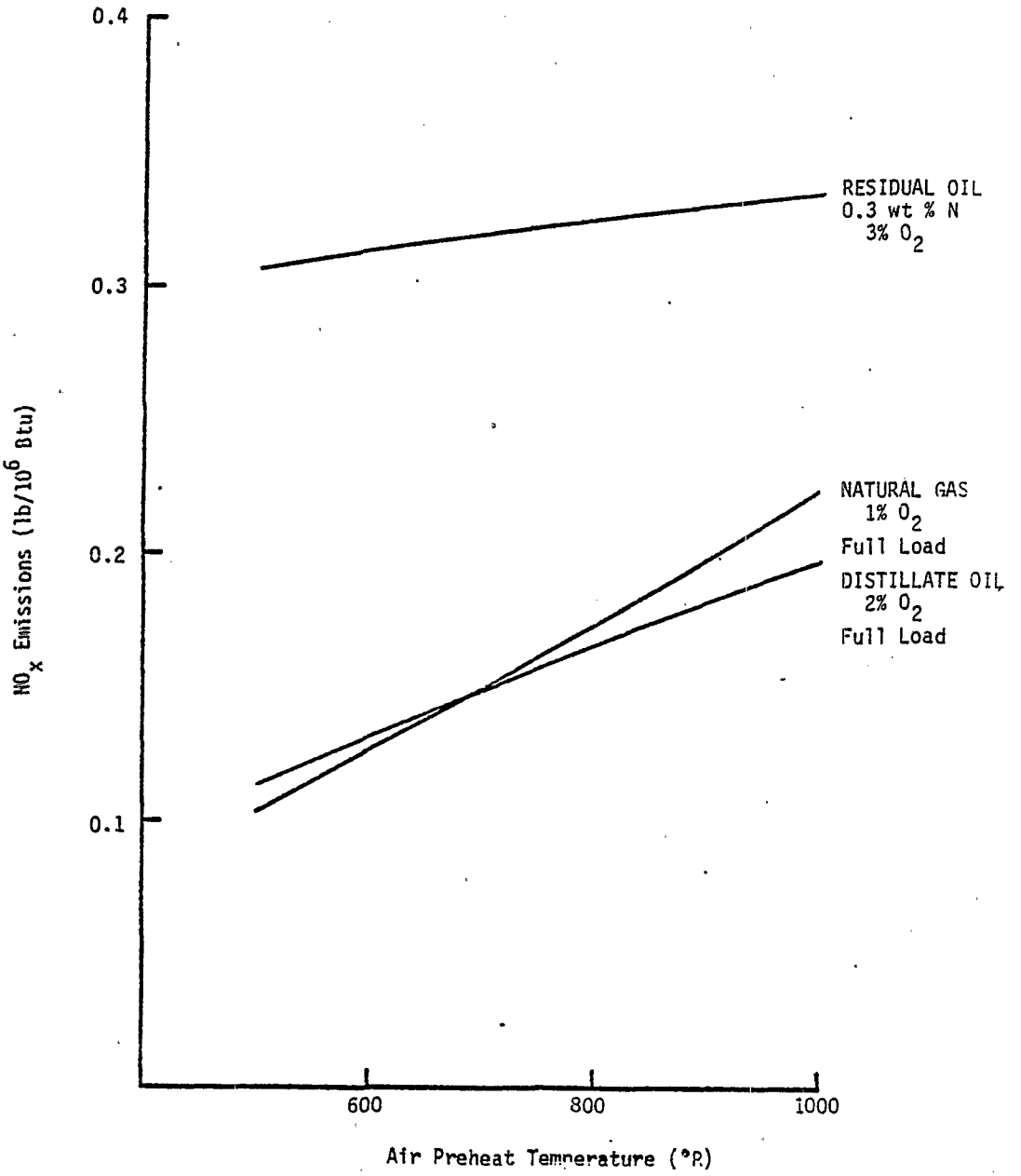


Figure 4-5. Effects of air preheat temperature on $NO_x$ emissions from gas- and oil-fired boilers (Reference 4-43).

Operational problems with LNB controls have not yet been well identified. However, preliminary information indicates that some LNB controls increase either the length and/or the width of the burner flame. In retrofit applications where adequate firebox space is not available some degree of derating may be required (Reference 4-55).

Coal-Fired Boilers

The baseline $NO_x$ emissions from coal-fired boilers are generally higher than those from gas and oil-fired units. Emissions range from 100 to 550 ng/J (0.23 to 1.3 lb/$10^6$ Btu). Although the fuel nitrogen contents of the test coals are high, ranging from 0.8 to 1.5 percent by weight, field studies indicate no strong dependence of $NO_x$ emissions upon fuel nitrogen content. Other factors are apparently more important in determining $NO_x$ production, such as furnace geometry, excess air, firing rate, burner type, and other fuel properties (Reference 4-56).

Coal-fired boilers are generally classified by their coal feeding mechanism: pulverized coal, spreader stoker, and mass fed stoker. Studies have found that pulverized coal-fired boilers produce the highest uncontrolled $NO_x$ emissions -- approximately 328 ng/J (0.76 lb/$10^6$ Btu). In these units finely pulverized coal is blown into the boiler through burners. The pulverized coal burns relatively rapidly in suspension, resulting in a very high combustion intensity.

Spreader stoker boilers, in which the coal is thrown onto the grate from above, exhibited intermediate $NO_x$ emission rates -- approximately 274 ng/J (0.63 lb/$10^6$ Btu) for uncontrolled full-load firing. In these units some of the fuel is burned in suspension with air supplied by over fire air ports, and the remainder is combusted on the grate with under fire air. The resulting combustion is therefore partially staged. Due to design characteristics and the partial staging characteristics, the combustion intensities of stoker boilers are less than of pulverized coal-fired boilers, contributing to a decrease in $NO_x$ emissions.

Mass fed stokers had the lowest emissions -- approximately 145 ng/J (0.34 lb/$10^6$ Btu). In these units the combustion air fed up through the grating is insufficient for complete oxidation, so additional air is introduced above the grating through over fire air ports. Combustion is, therefore, effectively staged, and the $NO_x$ emissions are quite low.

The following discussion of combustion modification controls for coal-fired boilers will focus primarily on spreader stoker boilers. Pulverized coal-fired boilers are predominantly constructed in sizes greater than 73 MW (250 x $10^6$ Btu/hr). Large industrial boilers that are greater than this size are very similar to utility boilers which are discussed in Section 4.1. Mass fed stokers will generally not be discussed because there is very little data available on the control of $NO_x$ emissions from these sources. This lack of data can be attributed to the smaller size of these units [generally less than 29 MW (100 x $10^6$ Btu/hr)] and the naturally lower $NO_x$ emissions from this source (Reference 4-57).

Low Excess Air - Low excess air (LEA) controls are the most effective of the combustion modification techniques for the control of $NO_x$ emissions from stoker-fired boilers. At full load, stoker boilers typically exhibit a flue gas oxygen concentration of 6 to 11 percent. Studies conducted by the American Boiler Manufacturers Association have demonstrated that excess air rates for spreader stoker boilers can be safely reduced to a flue gas oxygen concentration of 4 to 6 percent at full load conditions (Reference 4-56). At full load conditions, the heat release rate is the highest and consequently, so is the potential for $NO_x$ emissions.

The EPA conducted a series of tests on 17 spreader stoker boilers to determine the performance characteristics of LEA controls. Under normal operating conditions, these stokers exhibited a flue gas oxygen concentration of 9 percent. When LEA controls were applied the average flue gas oxygen level was reduced to 6.4 percent with an accompanying 26 percent reduction in $NO_x$ emissions (References 4-42, 4-46, 4-49, 4-58, 4-59).

A more indepth study was conducted on four of these boilers to determine the specific relationship between excess air levels and $NO_x$ emissions. The results of this study are presented in Figure 4-6 for full load conditions (Reference 4-60).

The EPA also conducted 30-day studies on two spreader stoker boilers. On a 36 MW (125 x $10^6$ Btu/hr) boiler, $NO_x$ emissions under LEA controls averaged 170 ng/J (0.4 lb/$10^6$ Btu) (Reference 4-61). For a 55 MW (190 x $10^6$ Btu/hr) boiler the $NO_x$ emissions under LEA controls averaged 208 ng/J (0.48 lb/$10^6$ Btu) (Reference 4-62).

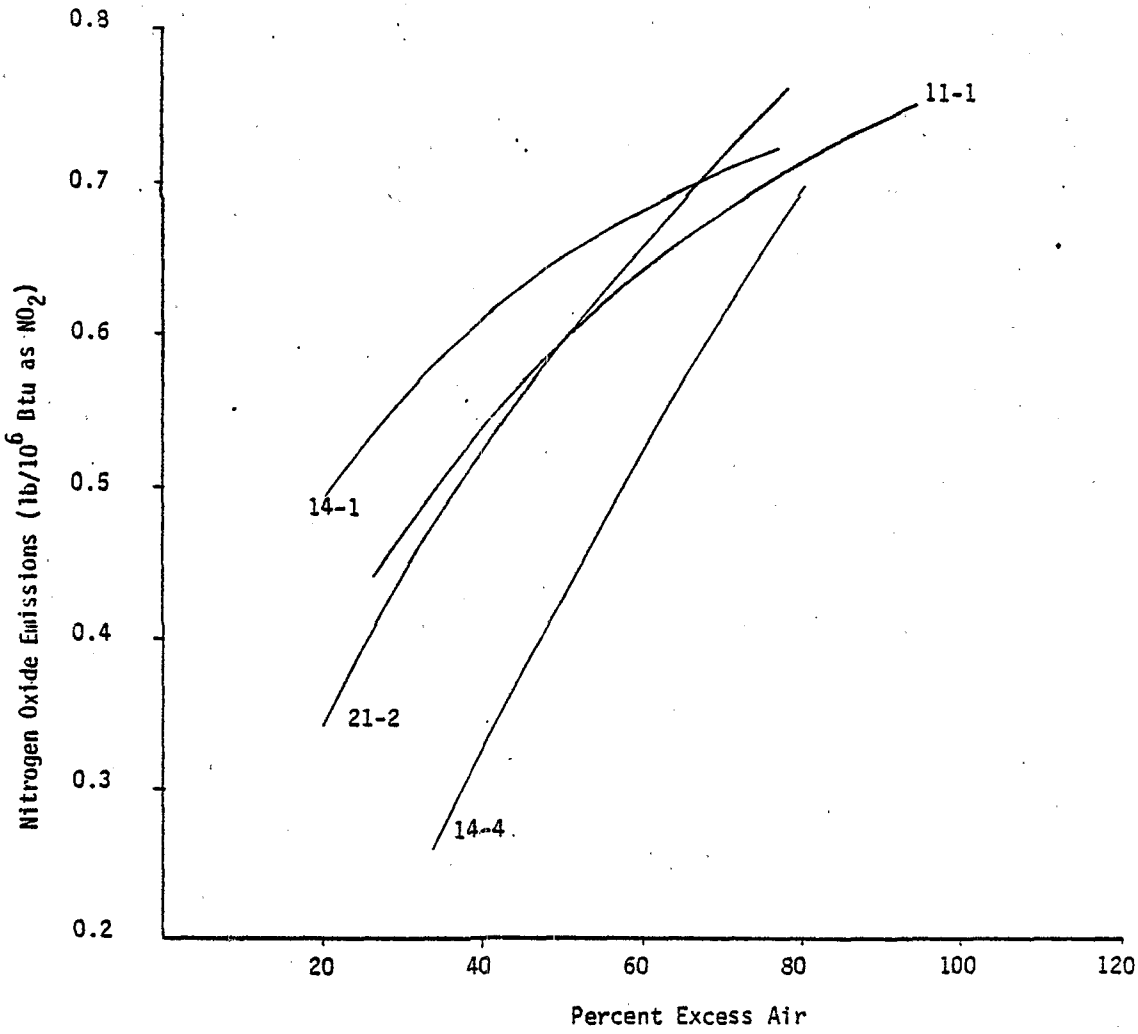


Figure 4-6. Effects of excess air on $NO_x$ emissions from stoker coal-fired boilers. (Reference 4-60).

The American Boiler Manufacturers Association (ABMA) has also recently completed a series of tests on stoker boilers. The ABMA study found that for five out of six spreader stokers studied, the $NO_x$ emissions decreased from 9.0 to 15.5 ng/J (0.021 to 0.036 lb/$10^6$ Btu) for each 10 percent decrease in excess air (approximately 1 percent decrease in flue gas $O_2$). The sixth spreader stoker boiler exhibited a 28.8 ng/J (0.067 lb/$10^6$ Btu) decrease in $NO_x$ for the same decrease in excess air. For these spreader stokers, LEA controls achieved an average $NO_x$ emission reduction of 24 percent over high excess air operation at full load (Reference 4-56).

The ABMA results from testing several underfed stokers exhibited $NO_x$ emission reductions of 6.9 to 11.6 ng/J (0.016 to 0.027 lb/$10^6$ Btu) for each 10 percent reduction in excess air (approximately equivalent to 1 percent reduction in flue gas $O_2$). The average $NO_x$ reduction achieved by LEA controls on these boilers was 20 percent over high excess air operation (Reference 4-56).

LEA controls are applicable to all types of stoker boilers. The major potential problem with LEA controls is insufficient combustion air. If adequate combustion air is not supplied to the grate, there is an increase in carbon monoxide, VOC, and unburned carbon emissions, in addition to the formation of clinkers on the grate. Oxygen trim systems are commercially available which monitor $O_2$ and/or CO concentrations in the stack and adjust combustion air flow appropriately to insure good combustion (Reference 4-45).

Staged Combustion Air - Staged combustion air (SCA) has not proved to be as effective in reducing $NO_x$ emissions from stoker boilers as it was for other types of boilers. This ineffectiveness has been attributed to the observation that stoker boilers generally achieve some degree of staged combustion by their inherent design. Fuel is burned relatively slowly on a grate supplied by overfire air (OFA) and undergrate air. Using OFA tends to reduce undergrate air, creating a locally oxygen difficient zone at the fuel bed (Reference 4-44).

The ABMA conducted a study of the impact of further reducing undergrate air and compensating with an increase in OFA on 11 stoker boilers. The conclusion from this study was that SCA controls had an insignificant impact on $NO_x$ emissions from both spreader- and mass-fed stoker boilers (Reference 4-56).

Similar results were also obtained from a SCA study of a 41 MW (140 x $10^6$ Btu/hr) spreader stoker boiler, a 22 MW (75 x $10^6$ Btu/hr) mass-fed stoker boiler, and a 85 MW (290 x $10^6$ Btu/hr) mass-fed boiler (Reference 4-46).

The major operational problem associated with the implementation of SCA controls is insufficient undergrate air. This problem results in increased emissions of VOC, carbon monoxide and particulate emissions, in addition to grate slagging and corrosion problems. These operational problems can be avoided by the use of commercially available oxygen trim systems which monitor stack $O_2$ and CO concentrations, and make combustion air adjustments appropriately (Reference 4-45).

Flue Gas Recirculation - The partial recirculation of flue gas (FGR) to the combustion chamber has not been demonstrated on stoker boilers. However FGR has been tested on other high nitrogen fuels such as residual oil-fired boilers and pulverized coal-fired boilers. The results of these tests have shown that recirculation rates of up to 15 percent decreased $NO_x$ emissions by only 17 percent, whereas similar recirculation rates decreased $NO_x$ by as much as 50 percent for gas- and distillate oil-fired boilers (Reference 4-47, 4-63, 4-64).

Reduced Air Preheat - The technique of reduced air preheat (RAP) attempts to reduce $NO_x$ emission formation by reducing the temperature of preheated combustion air. This technique has been studied on only a very limited scale on stoker boilers. A comparison of the typical emissions from six spreader stoker boilers equipped both with and without combustion air preheaters showed no significant difference in $NO_x$ emissions which can be associated with combustion air preheat (Reference 4-60). Some researchers claim that the coal bed preheats the combustion air before the combustion occurs and thus defeats the purpose of the method.

This technique is of course limited to stokers equipped with combustion air preheaters. Only larger stokers, greater than 29 MW (100 x $10^6$ Btu/hr) tend to have air preheaters. In addition, significant losses in boiler efficiency will occur if flue gas temperatures leaving the stack are increased as a concequence of bypassing the preheater. Economizers can be added to avoid these efficiency losses.

4.2.1.2 Post Combustion Techniques

Post combustion techniques promise to be more effective than combustion modification techniques for control of $NO_x$ emissions from industrial boilers. However, the demonstration of post combustion techniques currently lags a significant distance behind combustion modification.

The two most developed post combustion techniques are ammonia injection and selective catalytic reduction. Both of these techniques are based on the reaction of ammonia with nitrogen oxide to form elemental nitrogen and water. These two techniques will be discussed in this section. Other post combustion techniques such as wet scrubbing and electron beam irradiation are still in the research and development stage, and will not be discussed in this section. Accurate information is not yet available on these emerging technologies with respect to their application, performance, cost, and operating problems for industrial boilers.

Ammonia Injection

Ammonia injection is the best demonstrated of the post combustion $NO_x$ control techniques. In this process, ammonia ($NH_3$) is injected into the flue gas downstream of the firebox where it reacts in a gas phase reaction with NO to produce $N_2$ and $H_2O$. One advantage of ammonia injection is that it can be used alone, or else in conjunction with combustion modification to achieve an additive $NO_x$ control effect.

In Japan, ammonia injection was applied on four industrial boilers; one oil-fired and three gas-fired ranging in size from 16 to 79 MW (55 - 270 x $10^6$ Btu/hr) heat input. The Japanese tests demonstrated a 40 to 65 percent reduction in $NO_x$ emissions. The most important variable in determining performance was the flue gas temperature at the point of ammonia injection (Reference 4-65).

In another test conducted on an oil field steam generator in California, ammonia injection achieved a 50 to 70 percent reduction in $NO_x$ emissions. This unit was burning a heavy crude oil (Reference 4-66).

The performance of ammonia injection has not been tested on firetube boilers, residual oil-fired boilers or stoker boilers. However the performance of ammonia injection is primarily dependent on the flue gas temperature at the point of injection and is relatively independent of fuels and combustion conditions. Therefore, the performance of this technique should be very similar for all common types of fossil fuel-fired boilers.

There are two operational problems of concern with the application of ammonia injection; maintaining the optimum injection location and ammonium sulfate deposits. As the boiler load fluctuates, there is a corresponding fluctuation in the temperature profile in the flue gas ducts. Because of the sensitivity of the ammonia - no reaction to temperature - load fluctuations also result in a fluctuation of the optimum injection location. For this reason ammonia injection is best suited for constant load boilers. Alternatively, ammonia injection systems may be accompanied with multiple injection points and associated controls so that ammonia can be injected at the proper point for the corresponding boiler load (Reference 4-66).

Ammonium sulfate problems are associated with burning high sulfur fuels. Unreacted ammonia reacts with sulfur oxide in the flue gas to form ammonium sulfate salts. These salts create plugging and corrosion problems for down stream preheaters and boiler parts. Ammonium sulfate problems are best mitigated by applying ammonia injection only to very low sulfur fuels such as natural gas and clean fuel oils and by the use of ammonia analyzers/controllers to detect and control the presence of excess ammonia (Reference 4-66).

Selective Catalytic Reduction - Selective catalytic reduction (SCR) is a technique involving removal of the flue gas $NO_x$ by reacting the $NO_x$ with ammonia in a catalytic reactor to form elemental nitrogen. With the exception of the use of a catalyst, it is similar to the ammonia injection $NO_x$ control technique just discussed.

Although not demonstrated in the U.S., SCR is thought to be applicable to all types of fossil fuel-fired industrial boilers. Greater than 90 percent $NO_x$ reduction is achieved at ammonia to $NO_x$ ratios of 1:1 on commercial systems applied to industrial boilers in Japan. These systems have been applied to a variety of gas- and oil-fired boilers in Japan, and appear to be viable techniques of attaining up to 90 percent $NO_x$ control on all industrial boilers (Reference 4-67).

Two operational problems associated with SCR are the formation of ammonium sulfate salts and the loss of unreacted ammonia. The ammonium sulfate salts pose plugging and corrosion problems for down stream equipment and the loss of unreacted ammonia poses an emission problem. Both of these problems are the focus of ongoing EPA and Electric Power Research Institute studies (Reference 4-67).

### 4.2.2 Cost Impact

$NO_x$ emission control costs are a very important concern to the owners and operators of industrial boilers. These costs can vary greatly with control technique, degree of control, and boiler size and type. This section discusses the capital and operating cost of various $NO_x$ control technologies, and projects the impact of these controls on the cost of producing steam.

The discussion on combustion modification and ammonia injection controls was summarized from a single study conducted for the Industrial Environmental Research Laboratory (IERL) of EPA in July 1981 (Reference 4-54). This study provides a comprehensive analysis of $NO_x$ control costs on a common cost basis. The reader is referred to this report for detailed information on the assumptions and basis applied in developing these costs.

The discussion on SCR costs was summarized from a study conducted for the IERL on $NO_x$ flue gas treatment technologies, completed December 1979. The reader is referred to this study, Reference 4-67, for further information on the assumptions and basis applied in developing these costs.

Section 4.2.2.1 discusses the costs associated with the application of combustion modification controls for $NO_x$ emissions. And Section 4.2.2.2 discusses the costs associated with the application of post combustion controls for $NO_x$ emissions.

#### 4.2.2.1 Combustion Modification Techniques

Basis

Two cost components are studied in this analysis: capital costs and annualized costs. Capital costs represent the initial investment for installing the control equipment. For the analyses presented in this report, capital costs include equipment costs, direct installation costs, indirect installation costs (engineering, startup, etc.) and contengencies. The annualized cost component includes fixed capital charges (capital recovery, taxes, insurance, etc.) and operating costs (utilities, materials, maintenance, labor, etc.). The annualized cost component also incorporates a credit or penalty for the impact of the control technology on the boiler's operating efficiency. Efficiency impacts are presented in Section 4.2.3.1.

Detailed information on the cost basis applied to generate the following combustion modification costs is presented in Reference 4-54. In general the equipment, labor, fuel, and utility costs are based on 1978 prices and are presented in 1978 dollars. A load factor of 45 percent was assumed for boilers smaller than 7000 kg steam/hr (15,000 lb/hr) and a load factor of 60 percent was assumed for all boilers larger than that size. A capital recovery factor of 0.2 was applied to convert capital costs to annualized capital charges.

In the following analysis, the costs to modify the boiler are given as a percentage of the boiler's installed cost. The boiler's installed cost does not include costs for auxilliary support equipment such as water treatment and fuel handling. However, the impacts on steam costs do consider the total cost to produce steam, including the costs for auxillaries.

Information on retrofit costs are not available in the same detail. However the costs for applying combustion modification controls to existing boilers are estimated to be twice the cost of application to new boilers (Reference 4-68).

Results

The estimated capital and operating costs associated with applying LEA, SCA, and FGR controls on industrial boilers are presented in Tables 4-27, 4-28, and 4-29 respectively.

For the reduced air preheat (RAP) control option, the costs are negligible for new boilers when a feed water economizer is substituted for the combustion air preheater. Feed water economizers are estimated to recover the equivalent amount of waste heat for the equivalent cost of a combustion air preheater. The retrofit of RAP controls on an existing boiler where a feedwater economizer is not feasible can easily result in a boiler efficiency loss of up to 3 percent and a steam price increase of as much as 2 percent (Reference 4-69, 4-70, 4-71). Efficiency drops of twice this amount could result from significant preheat reductions.

Since low $NO_x$ burners are still in the developmental stage, costs are not yet firmly established. For new boilers, costs would be affected by the incremental cost difference between a low $NO_x$ burner and a standard burner plus the cost of an oxygen trim system, if needed. Windbox modifications may also be needed. Finally, it is expected that LNB will allow LEA operation which would keep the economic impact of LNB at a minimum, thus, it seems likely that LNB operation will cost no more than SCA operation and, in fact, may have an even smaller effect on steam costs than SCA (Reference 4-72 and 4-73).

TABLE 4-27. ESTIMATED COST OF LOW EXCESS AIR OPERATION FOR NEW BOILERS (1978 Dollars)

| TYPE | HEAT INPUT MW ($10^6$ Btu/hr) | PERCENT $NO_x$ REDUCTION[x] | CAPITAL COST 1000 $ | ANNUALIZED COSTS | | | PERCENT CHANGE IN COST OF | |
|---|---|---|---|---|---|---|---|---|
| | | | | FIXED | OPERATING[a] | TOTAL | BOILER | STEAM |
| | | | | $10^3$ mills/ kg/steam | $10^3$ mills/ kg steam | $10^3$ mills/ kg/steam | | |
| Pulverized Coal | 59 (200) | 15 | 27 | 13 (6) | -28 (-13)[b] | -15 (-7) | 0.4 | -0.1 |
| Spreader Stoker | 44 (150) | 15 | 22 | 16 (7) | -31 (-14) | -15 (-7) | 0.5 | -0.1 |
| Chain Grate Stoker | 22 (75) | 15 | 17 | 26 (12) | -28 (-13) | -2 (-1) | 1.2 | 0 |
| Underfeed Stoker | 9 (30) | 15 | 14 | 54 (24) | -23 (-10) | 21 (14) | 1.5 | 0.1 |
| Residual Oil Watertube | 44 (150) | 20 | 17 | 12 (5) | -75 (-34) | -63 (-29) | 1.9 | -0.5 |
| Residual Oil Firetube | 4.4 (15) | 15 | 9 | 91 (41) | -59 (-27) | 32 (14) | 9.0 | 0.1 |
| Distillate Oil Watertube | 29 (100) | 10 | 14 | 16 (7) | -41 (-19) | -25 (-11) | 3.4 | -0.2 |
| Distillate Oil Firetube | 4.4 (15) | 10 | 9 | 91 (41) | -26 (-12) | 65 (29) | 9.0 | 0.2 |
| Natural Gas Watertube | 29 (100) | 5 | 14 | 16 (7) | -25 (-11) | -9 (-4) | 4.0 | -0.2 |
| Natural Gas Firetube | 4.4 (15) | 5 | 9 | 91 (41) | -11 (-5) | 80 (36) | 9.0 | 0.3 |

[a]Numbers in parentheses are in units of mills/$10^3$ lb stream.

[b]Negative values represent cost savings.

[c]Reference 4-54.

TABLE 4-28. ESTIMATED COST OF STAGED COMBUSTION OPERATION FOR NEW BOILERS (1978 Dollars)

| TYPE | HEAT INPUT MW ($10^6$ Btu/hr) | PERCENT $NO_x$ REDUCTION[x] | CAPITAL COST 1000 $ | ANNUALIZED COSTS[a] FIXED ($10^3$ mills/ $10^3$ kg/steam) | OPERATING ($10^3$ mills/ $10^3$ kg steam) | TOTAL ($10^3$ mills/ $10^3$ kg/steam) | PERCENT CHANGE IN COST OF BOILER | PERCENT CHANGE IN COST OF STEAM |
|---|---|---|---|---|---|---|---|---|
| Pulverized Coal | 59 (200) | 25 | 47 | 24 (11) | 47 (21) | 71 (32) | 0.8 | 0.6 |
| Spreader Stoker | 44 (150) | 20 | 22 | 16 (7) | 4 (2) | 20 (9) | 0.5 | 0.1 |
| Chain Grate Stoker | 22 (75) | 15 | 17 | 26 (12) | 6 (3) | 32 (15) | 1.2 | 0.2 |
| Underfeed Stoker | 9 (30) | 15 | 14 | 54 (24) | 12 (5) | 66 (29) | 1.5 | 0.3 |
| Residual Oil Watertube | 44 (150) | 35 | 32 | 23 (10) | 80 (36) | 103 (46) | 5.5 | 1.2 |
| Residual Oil Firetube | 4.4 (15) | 25 | 19 | 193 (88) | 117 (53) | 310 (141) | 21.0 | 1.2 |
| Distillate Oil Watertube | 29 (100) | 30 | 26 | 29 (13) | 84 (38) | 113 (51) | 7.0 | 1.2 |
| Natural Gas Watertube | 29 (100) | 30 | 27 | 29 (13) | 69 (31) | 98 (44) | 7.0 | 1.5 |

[a] Numbers in parentheses are in units of mills/$10^3$ lb stream.
Reference 4-54.

TABLE 4-29. ESTIMATED COST OF FLUE GAS RECIRCULATION OPERATION FOR NEW BOILERS (1978 Dollars)

| TYPE | HEAT INPUT MW ($10^6$ Btu/hr) | PERCENT $NO_x$ REDUCTION | CAPITAL COST 1000 $ | ANNUALIZED COSTS[a] | | | PERCENT CHANGE IN COST OF | |
|---|---|---|---|---|---|---|---|---|
| | | | | FIXED | OPERATING | TOTAL | BOILER | STEAM |
| | | | | $10^3$ mills/ kg/steam | $10^3$ mills/ kg steam | $10^3$ mills/ kg/steam | | |
| Distillate Oil Watertube | 29 (100) | 40 | 26 | 29 (13) | 135 (61) | 164 (74) | 7.0 | 1.7 |
| Distillate Oil Firetube | 4.4 (15) | 40 | 19 | 192 (87) | 175 (80) | 367 (167) | 21.0 | 1.2 |
| Natural Gas Watertube | 29 (100) | 40 | 26 | 29 (13) | 120 (54) | 150 (67) | 7.0 | 2.4 |
| Natural Gas Firetube | 4.4 (15) | 40 | 19 | 192 (87) | 159 (72) | 351 (159) | 21.0 | 1.7 |

[a] Numbers in parentheses are in units of mills/$10^3$ lb stream.
Reference 4-54.

Based on the limited data available on combustion modification costs for industrial boilers, some tentative conclusions can be made.

- Low excess air operation, in many cases, will actually lower steam costs due to the increase in thermal efficiency. In general, LEA operation is recommended for use with other control techniques to lessen their cost impact and to give higher $NO_x$ reductions.
- Staged combustion causes an estimated small increase in steam cost but with careful design and operation this estimated cost increase can probably be reduced.
- Flue gas recirculation, though costly, is the most effective for the low nitrogen fuels, distillate oil and natural gas. Again, optimal design and operation will probably lower the cost.
- Low $NO_x$ burners hold the promise of being the most cost-effective technique for oil and gas boilers. However, they are still under development.
- Reduced air preheat is recommended for those boilers where an economizer may be installed in place of an air preheater.

4.2.2.2 Post Combustion Techniques

This section presents the costs for installing and operating the two most advanced post combustion techniques for industrial boiler $NO_x$ control: ammonia injection and selective catalytic reduction.

Ammonia injection is not a demonstrated control technology for industrial boilers within the U.S. The few sources available on ammonia injection costs are based on large utility boilers. Extrapolating down to an industrial-size boiler, the capital cost for installing ammonia injection on a 59 MW (200 x $10^6$ Btu/hr) pulverized coal boiler is estimated to be about $236,000. This cost represents about a 4 percent increase over the cost of an uncontrolled boiler. The incremental steam cost is estimated to be 220 mills/$10^3$ kg steam (100 mills/$10^3$ lb steam) or a 2.5 percent increase in steam price. Because of the large error in extrapolating from a utility- size boiler down to an industrial-size pulverized coal boiler or to other boiler types, the above price estimates have very large uncertainties (References 4-74, 4-75, 4-76).

Selective catalytic reduction (SCR) is another post combustion technique which has not been applied to industrial boilers in the U.S. The most extensive cost estimates for SCR controls is available from a detailed engineering cost analysis of proposed plant designs (Reference 4-77). The results of this analysis are presented in Tables 4-30, 4-31, and 4-32. These cost estimates are based on mid-1978 costs. Annualized costs are calculated from capital costs using a capital recovery factor of 0.13, reflecting a 10 percent interest rate and a 15 year recovery period. The load factors for coal, residual oil, distillate oil, and natural gas were 60 percent, 55 percent, 45 percent, and 45 percent respectively. Finally, the most stringent control level reflects 90 percent $NO_x$ control and the moderate control level reflects 70 percent $NO_x$ control.

### 4.2.3 Energy and Environmental Impact

#### 4.2.3.1 Energy Impact

The energy impacts of applying $NO_x$ emission controls are very important to the owner/operator of industrial boilers. By far, the major cost of operating an industrial boiler is the fuel cost. Combustion inefficiencies created by $NO_x$ emission control techniques translate directly into higher steam costs. This section discusses the energy impacts associated with applying $NO_x$ emission control technologies. These energy impacts are a combination of changes in boiler thermal efficiency, and direct energy consumption by the control technology. The energy impacts presented here were summarized in Tables 4-24 and 4-25.

Low Excess Air

Low excess air (LEA) is the simplest of all $NO_x$ control techniques, and one which saves fuel. Virtually all boilers tested show an increase of about 0.5 percent in efficiency for each 1 percent decrease in flue gas oxygen. However, in a few isolated cases, LEA did not increase efficiency for natural-gas-fired units. The average energy savings was approximately 1 percent of the thermal input (Reference 4-42, 4-46, and 4-49).

Staged Combustion Air

Staged combustion air (SCA) can be achieved by use of BOOS and by use of OFA. In the limited number of studies conducted on BOOS controls, very little impact on thermal efficiency has been observed. The thermal efficiency has ranged from an 0.5 percent increase to an 0.5 percent decrease (Reference 4-42, 4-49, and 4-68).

TABLE 4-30. ANNUAL COST OF $NO_x$ CONTROL SYSTEMS APPLIED TO COAL-FIRED BOILERS (Reference 4-67)

| Boiler | Size, MBtu/hr | Control System | Annual Cost, $1000/yr | |
|---|---|---|---|---|
| | | | Moderate Control | Stringent Control |
| Underfeed Stoker | 30 | Parallel Flow SCR | 108 | 130 |
| Chaingrate | 75 | Parallel Flow SCR | 153 | 197 |
| Spreader Stoker | 150 | Parallel Flow SCR | 221 | 291 |
| Pulverized Coal | 200 | Parallel Flow SCR | 254 | 351 |

TABLE 4-31. ANNUAL COST OF $NO_x$ CONTROL SYSTEMS APPLIED TO OIL-FIRED BOILERS (Reference 4-67)

| Boiler | Size, MBtu/hr | Control System | Annual Cost, $1000/yr | |
|---|---|---|---|---|
| | | | Moderate Control | Stringent Control |
| Distillate Oil | 15 | Fixed Packed Bed SCR | 64 | 67 |
| Distillate Oil | 150 | Fixed Packed Bed SCR | 137 | 176 |
| Residual Oil | 30 | Parallel Flow SCR | 96 | 108 |
| Residual Oil | 30 | Moving Bed SCR | 120 | 130 |
| Residual Oil | 150 | Parallel Flow SCR | 181 | 223 |
| Residual Oil | 150 | Moving Bed SCR | 168 | 204 |

TABLE 4-32. ANNUAL COST OF $NO_x$ CONTROL SYSTEMS APPLIED TO NATURAL GAS-FIRED BOILERS (Reference 4-67)

| Boiler | Size, MBtu/hr | Control System | Annual Cost, $1000/yr | |
|---|---|---|---|---|
| | | | Moderate Control | Stringent Control |
| Package, Firetube | 15 | Fixed Packed Bed SCR | 64.4 | 67.6 |
| Package, Watertube | 150 | Fixed Packed Bed SCR | 129 | 175 |

Tests on OFA controls have shown a wider thermal efficiency impact, ranging from a 1 percent efficiency gain to a 3 percent efficiency loss. With OFA controls there is an additional energy loss associated with increased fan power requirements. This additional fan power is required to overcome the pressure drop in the air ducts leading to the OFA ports, and amounts to less than 0.1 percent of the thermal input (Reference 4-42 and 4-72).

Both SCA controls are sensitive to burner stoichiometry and to location of air injection. The use of oxygen trim systems will help offset possible boiler efficiency losses associated with either SCA control.

Flue Gas Recirculation

In tests run to date flue gas recirculation (FGR) had only a small effect on boiler thermal efficiency. Thermal efficiency impacts ranged from a 0.5 percent increase to a 1.0 percent decrease, while most impacts were less than a 0.5 percent decrease (Reference 4-42, 4-48, 4-49, 4-68, 4-77). According to utility boiler data, an increase of 0.25 percent of boiler heat input could be required to power the FGR fan (Reference 4-72).

Low $NO_x$ Burners

At present, there is very little data available on the energy impacts of low $NO_x$ burners (LNB). LNB are not expected to have a significant impact on thermal efficiency. In fact some improvement in efficiency may be possible due to their expected use of lower excess air (Reference 4-78).

Reduced Air Preheat

The use of reduced air preheat (RAP) has the potential for significantly impacting thermal efficiency. Tests have demonstrated thermal efficiency decreases of up to 3 percent with the use of RAP. Even greater energy penalties are incurred with the full reduction of air preheat. This efficiency decrease is associated with the loss of valuable waste heat when the preheater is bypassed. However, on new units where feedwater economizers can be substituted for preheaters in the boiler design, this thermal efficiency loss can be entirely mitigated (References 4-42, 4-46, and 4-49).

*Ammonia Injection*

Very little information is available on the energy impacts associated with ammonia injection controls. However, since ammonia injection is a post combustion control technology, its primary energy impact will be associated with the energy usage of ammonia handling and injection equipment. For SCR controls, the ammonia handling and injection equipment consumed steam and electricity totaling less than 0.1 percent of the thermal energy input (Reference 4-67).

Selective Catalytic Reduction

Selective catalytic reduction (SCR) is a post combustion control technology and therefore is not expected to have an impact on the direct thermal efficiency of the boiler. However, SCR controls do consume electricity and steam. The electrical demand is required to overcome the pressure drop across the catalytic reactor and to transfer ammonia. Steam is consumed in vaporizing and diluting the ammonia. The combined electrical and steam demand required to operate SCR is consistently less than 0.64 percent of the boiler thermal input and generally less than 0.3 percent (Reference 4-67).

4.2.3.2 Environmental Impact

Very little research has been conducted on the environmental impacts associated with the use of $NO_x$ emission controls on industrial boilers. Much more extensive research has been conducted on utility size boilers, the results of which are presented in Section 4.1.3.2. Because of the similarities between industrial and utility boilers with respect to emission characteristics, the reader is referred to the above section for information on the environmental impacts of applying $NO_x$ controls to industrial boilers.

In general, combustion modification controls were found to generate very slight or no increase in carbon monoxide, VOC, particulates, or trace elements. However there was a slight increase in POM emissions.

Post combustion techniques including ammonia injection and SCR are expected to increase emissions of ammonia, ammonia salts, and $SO_3$. In some cases, wastewater treatment and disposal may be complicated by the addition of nitrogen compounds. Finally SCR systems will require waste catalyst disposal. The full extent of these environmental impacts is not known and is the subject of ongoing EPA research.

## 4.3 PRIME MOVERS

### 4.3.1 Reciprocating Internal Combustion Engines

Stationary reciprocating engines account for nearly 20 percent of the $NO_x$ from stationary sources, or 2.4 Tg per year ($2.66 \times 10^6$ tons). There are presently no Federal regulations for gaseous emissions from these engines. Some local areas, such as the South Coast Air Pollution Control District of Southern California, have set standards for internal combustion engines.

A 1973 study by McGowin (Reference 4-79) provides a good overview of emissions from stationary engines, particularly the large bore engines used in the oil and gas industry and for electric power generation. An EPA-sponsored Standards Support and Environmental Impact Study (SSEIS) for these engines (Reference 4-80) will be completed in 1978 and will be the most comprehensive study of stationary reciprocating engines to date.

#### 4.3.1.1 Control Techniques

The $NO_x$ control techniques for IC engines must be effective in reducing emissions over a broad range of operating conditions — from continuous operation at rated load to lower utilization applications at variable load. In general, large natural gas spark ignition engines running at rated loads have the highest $NO_x$ emission factors. Gasoline engines, in contrast, frequently operate at lower loads (less than 50 percent of rated) and produce substantially higher levels of CO and HC. The $NO_x$ control techniques for these engines often involve HC and CO control since these emissions frequently increase as $NO_x$ is reduced. Divided chamber diesel-fueled engines produce low levels of $NO_x$ (accompanied by greater fuel consumption than open chamber designs). In general, all diesel-fueled engines have relatively small HC and CO emissions (less than 4 g/kWh*).

The following paragraphs will discuss $NO_x$ control techniques in general followed by a tabulation of specific $NO_x$ reductions, by engine group. A lack of emission data precludes any discussion of natural gas engines less than 75 kW/cylinder (100 hp/cylinder).

Table 4-33 summarizes the principal combustion control techniques for reciprocating engines. These methods may require adjustment of the engine operating conditions, addition of hardware, or a combination of both. Retard, air-to-fuel ratio change, derating, decreased inlet air temperature, or combinations of these controls appear to be the most viable control techniques in the near term. Nevertheless, there is some uncertainty regarding maintenance and durability of these techniques because, in the absence of regulation, very little data exists for controlled engines outside of laboratory studies, particularly for large stationary engines. In general, increases in fuel consumption, as much as 10 percent, are the most immediate consequence of the application of these

*shaft output

## Table 4-33. SUMMARY OF $NO_x$ EMISSION CONTROL TECHNIQUES FOR RECIPROCATING INTERNAL COMBUSTION ENGINES

| CONTROL | PRINCIPLE OF REDUCTION | APPLICATION | BSFC[d] INCREASE | COMMENTS -- LIMITATIONS |
|---|---|---|---|---|
| RETARD<br>Injection (CI)[a]<br>Ignition (SI)[b] | Reduces peak temperature by delaying start of combustion during the combustion stroke. | An operational adjustment. Delay cam or injection pump timing (CI); delay ignition spark (SI). | Yes | Particularly effective with moderate amount of retard; further retard causes high exhaust temperature with possible valve damage and substantial BSFC increase with smaller $NO_x$ reductions per successive degree of retard. |
| CHANGE AIR-TO-FUEL (A/F) RATIO | Peak combustion temperature is reduced by off-stoichiometric operation. | An operational adjustment. Increase or decrease to operate on off-stoichiometric mixture. Reset throttle or increase air rate. | Yes | Particularly effective on gas or dual-fuel engines. Lean A/F effective but limited by misfiring and poor load response. Rich A/F effective but substantial BSFC, HC, and CO increase. A/F less effective for diesel-fueled engines. |
| DERATE | Reduces cylinder pressures and temperatures. | An operational adjustment, limits maximum bmep[c] (governor setting). | Yes | Substantial increase in BSFC with additional units required to compensate for less power. HC and CO emission increase also. |
| INCREASE SPEED | Decreases residence time of gases at elevated temperature and pressure. | Operational adjustment or design change. | Yes | Practically equivalent to derating because bmep is lowered for given power requirements. Compressor applications constrained by vibration considerations. Not a feasible technique for existing and most new facilities. |
| DECREASE INLET MANIFOLD AIR TEMPERATURE | Reduces peak temperature. | Hardware addition to increase aftercooling or add aftercooling (larger heat exchanger, coolant pump). | No | Ambient temperatures limit maximum reduction. Raw water supply may be unavailable. |
| EXHAUST GAS RECIRCULATION (EGR)<br>External | Dilution of incoming combustion charge with inert gases. Reduce excess oxygen and lower peak combustion temperature. | Hardware addition; plumbing to shunt exhaust to intake; cooling may be required to be effective; controls to vary rate with load. | No if EGR rates not excessive | Substantial fouling of heat exchanger and flow passages; anticipate increased maintenance. May cause fouling in turbocharged, aftercooled engine. Substantial increases in CO and smoke emissions. Maximum recirculation limited by smoke at near rated load, particularly for naturally aspirated engines. |
| Internal<br>valve overlap or retard | Cooling by increased scavaging, richer trapped air-to-fuel ratio. | Operational hardware modification: adjustment of valve cam timing. | Yes | Not applicable on natural gas engine due to potential gas leakage during shutdown. |
| exhaust back pressure | Richer trapped air-to-fuel ratio. | Throttling exhaust flow. | Yes | Limited for turbocharged engines due to choking of turbocompressor. |
| CHAMBER MODIFICATION<br>Precombustion (CI)<br>Stratified charge (SI) | Combustion in antechamber permits lean combustion in main chamber (cylinder) with less available oxygen. | Hardware modification; requires different cylinder head. | Yes | 5 to 10 percent increase in BSFC over open-chamber designs. Higher heat loss implies greater cooling capacity. Major design development. |
| WATER INDUCTION | Reduces peak combustion temperature. | Hardware addition: inject water into inlet manifold or cylinder directly; effective at water-to-fuel ratio = 1 (kg $H_2O$/kg fuel). | No | Deposit buildup (requiring demineralization); degradation of lube oil, cycling control problems. |
| CATALYTIC CONVERSION | Catalytic reduction of NO to $N_2$. | Hardware addition: catalytic converter installed in exhaust plumbing or reducing agent (e.g. ammonia) injected into exhaust stream. | No | Catalytic reduction of NO is difficult in oxygen-rich environment. Cost of catalyst or reducing agent high. Little research applied to large-bore IC engines. |

[a]Compression ignition
[b]Spark ignition
[c]bmep -- brake mean effective pressure
[d]BSFC -- brake specific fuel consumption

techniques (excluding inlet air cooling). All control techniques involve only operational adjustments with the exception of (1) derating which may require additional installed capacity to compensate for the decreased rating, (2) inlet manifold air cooling which involves the addition of a heat exchanger and a pump, and (3) catalytic conversion, which requires adding a catalytic reactor.

While exhaust gas recirculation (EGR) yields effective reduction of $NO_x$, this technique requires additional development to overcome fouling of flow passages and increased smoke levels. In general, recirculated exhaust is cooled in order to be effective. This practice promotes fouling. EGR has not been field tested for large engines, and has been rejected by one manufacturer of heavy-duty diesel truck engines and limited by another manufacturer. EGR has potential application in naturally aspirated engines if full load EGR cutoff is provided to prevent excessive smoke (<10 percent opacity). EGR, however, has been applied successfully in combination with other techniques, such as retard, in gasoline-fueled automobile engines (References 4-80, 4-81).

Water injection, similarly, has serious maintenance and durability problems associated with mineral deposit buildup and oil degradations. Despite use of demineralized water and increased oil changes, the control problems associated with engine startup and shutdown persist. This factor, coupled with the need for a water source, has led manufacturers to reject this technique (Reference 4-80).

Combustion chamber modifications such as precombustion and stratified chambers have demonstrated large $NO_x$ reductions, but also produce substantial fuel consumption increases (5 to 8 percent more than open chamber designs). With the rapid increases in the price of diesel fuel and gasoline, manufacturers have been reluctant to implement this technique. In fact, one manufacturer of divided chamber engines is vigorously pursuing development of low emission open chamber engines (Reference 4-80).

Table 4-34 summarizes emission reductions achieved with large bore engines by use of retard, air/fuel ratio changes, derating, and reduced inlet manifold air temperature (MAT). This table includes only those techniques from Table 4-33 which could be readily applied by the user. The cited emission reductions are based on results obtained from engines tested in manufacturers' laboratories. Therefore, some uncertainty exists concerning durability and maintenance over longer periods of operation. In general, the greatest $NO_x$ reductions are accompanied by the larger increases in fuel consumption. This is a direct result of reducing peak combustion temperatures and, thus, decreasing thermal efficiency.

Table 4-34. EFFECT OF $NO_x$ CONTROLS ON LARGE-BORE INTERNAL COMBUSTION ENGINES

a. Normalized percent reductions of $NO_x$

| Fuel | Gas | | | | Dual Fuel | | Diesel | | |
|---|---|---|---|---|---|---|---|---|---|
| Number Cylinders | 2 | | 4 | | 2 | 4 | 2 | | 4 |
| | BS[b] | TC | NA | TC | TC | TC | BS | TC | TC |
| Baseline[a] | 20 | 17 | 24-29 | 17-30 | 12 | 10-17 | 18-26 | 14-19 | 13-15 |
| Retard | 2.5 | 3.1 | 1.5 | 4.1-0.6 | 9.1 | 1.5-6-3 | 6.9 | 5.3-5.7 | 2.7-4.4 |
| Air-to-Fuel | 0.19 | 4.5 | 1.8 | 3.3 | 1.7 | 2.4-2.5 | – | – | |
| Derate | 6.2 | 2.6 | 0.25-1.3 | 0.34-1.9 | – | 0.01-0.94 | 0.84-0.92 | – | 0.17 |
| MAT | 0.9 | 1.3 | – | 0.4-0.9 | 1.3 | 0.6-0.8 | 0 | 0.2-0.4 | 0.1-0.3 |

b. Percent increase in brake specific fuel consumption

| | | | | | | | | | |
|---|---|---|---|---|---|---|---|---|---|
| Retard | 5.2 | 4.3 | 3.6 | 1.2 | 3.4 | 1.0[c] | – | 3.3[c] | 2.2[c] |
| Air-to-Fuel | 2.0 | 1.5 | 1.0 | 2.3 | 2.6 | 1.9 | – | – | – |
| Derate | 2.6 | 6.1 | 8.2[c] | 1.1[c] | 7.0[c] | – | 3.4[c] | – | 9.6 |
| MAT | 1.3 | 0.5 | – | 0 | 0.4 | +0.5 | – | 1.6 | 0 |

[a]Baseline data in gm/kWh shaft output, all other data in percent $NO_x$ reduction/unit control. Unit control is $1^o$ retard, 1 percent air flow increase, 1 percent derating, or 1.8K (1.0F) air temperature decrease.
[b]BS - blower scavenged, TC - turbo-charged, NA - naturally aspirated.
[c]Average value

Numerous investigators have studied control techniques to reduce $NO_x$ in diesel-fueled automotive truck applications. Many of these studies are summarized in Reference 4-81. Retard, turbocharging, aftercooling, derating and combinations of these controls are techniques that are currently utilized by manufacturers to meet California heavy-duty vehicle (>2700 kg, or 6000 lb) emission limits for diesel-fueled engines.

Table 4-35 lists five samples of $NO_x$ control techniques currently implemented by truck manufacturers to meet the 1975 California 13.4 g/kWh* (10 g/hp-hr) combined $NO_x$ and HC emission level. Manufacturers indicate that greater reductions will require (1) increasing degrees of application of these controls (and incurring additional fuel penalties) or, (2) application of techniques that need further development to overcome maintenance, control, and durability problems. Controls in this second category include EGR, water injection, and $NO_x$ reduction catalysts.

Gasoline engine manufacturers, in response to Federal and State regulations, have also conducted considerable research of emission control techniques to reduce $NO_x$, as well as HC and CO, levels. Efforts in this area have been directed at reducing emissions to meet (1) Federal and California heavy-duty vehicle limits, and (2) Federal and California passenger car emissions limits. Table 4-36 lists Federal and State emission limits, and Table 4-37 lists the various controls that are used in several combinations by manufactures to meet these limits. Table 4-38 gives specific examples of control techniques recently applied to meet Federal light duty vehicle emission limits.

Based on the preceding discussion, potential $NO_x$ emissions reductions for stationary reciprocating engines can be summarized as follows:

- Controls such as retard, air-to-fuel ratio change, turbocharging, inlet air cooling (or increased after cooling), derating and combinations of these controls have been demonstrated to be effective and could be applied with no required lead time for development. Fuel penalities, however, accompany these techniques and may exceed 5 percent of the uncontrolled consumption.
- Exhaust gas recirculation, water injection, catalytic conversion and precombustion or stratified charge techniques involve some lead time to develop as well as time to address maintenance and control problems.

*rated shaft output

Table 4-35. CONTROL TECHNIQUES FOR TRUCK SIZE DIESEL ENGINES [<375 kW (500 HP)] TO MEET 1975 CALIFORNIA 13.4 G/KWHR (10 G/HP-HR) COMBINED $NO_x$ AND HC LEVEL[a]

| Control | Percent bsfc[b] Increase |
|---|---|
| Retard, modify fuel system and turbocharger | 3<br>3 |
| Retard, modify fuel system and turbocharger, add aftercooler | 2 |
| Add turbocharger and aftercooler[c] | 3 |
| Retard[c] (naturally aspirated version) | 3 |
| Precombustion chamber | 5 - 8 |

[a]Based on Federal 13 mode composite cycle

[b]bsfc = brake specific fuel consumption

[c]Stationary versions of this engine would require a cylinder head with four exhaust valves rather than existing two valves.

TABLE 4-36. 1975 VEHICLE EMISSION LIMITS

| | $NO_x$ | HC | CO |
|---|---|---|---|
| Passenger Car, g/kWh (g/mi)[a] | | | |
| California | 6 (2.0) | 3 (0.9) | 26 ( 9) |
| Federal | 9 (3.1) | 4 (1.5) | 44 (15) |
| Light duty truck, g/kWh (g/mi) | | | |
| California | 6 (2.0) | 6 (2.0) | 59 (20) |
| Federal | 9 (3.1) | 6 (2.0) | 59 (20) |
| Heavy duty vehicles, g/kWh | | | |
| California | 13 | | 40 |
| Federal | 21 | | 53 |

[a]Emissions limits are estimated in g/kWh from g/mi assuming an average of 38.4 km/hr requiring 8195 W (11 bhp) for the 7-mode composite cycle.

TABLE 4-37. EMISSION CONTROL TECHNIQUES FOR AUTOMOTIVE GASOLINE ENGINES

| Control | Comment |
|---|---|
| $NO_x$: | |
| Rich or lean A/F ratio | Increased bsfc, HC, and CO |
| Ignition timing retard | Increased bsfc, HC, and CO, amount of control limited by potential exhaust valve damage |
| Exhaust gas recirculation (5 to 10 percent) | Increase bsfc and maintenance related to fouling, smoking limits degree of control |
| Catalytic convertors (reduction) | In developmental stage |
| Increased exhaust back pressure | Increase bsfc |
| Stratified combustion | Requires different cylinder head, increased bsfc |
| HC, CO: | |
| Thermal reactor | Very effective in reducing HC, CO |
| Catalytic convertor (oxidation) | Requires periodic catalyst element replacement |
| Exhaust manifold air injection | Increased bsfc to power air pump |
| Positive crankcase ventilation | Reduces HC evaporative losses |

TABLE 4-33. EMISSION CONTROL SYSTEMS FOR CONVENTIONAL GASOLINE INTERNAL COMBUSTION ENGINES (ADAPTED FROM Reference 4-81.

| Number | Year | System | Fuel Penalty %[b] | Reduction Factors[b] | | | |
|---|---|---|---|---|---|---|---|
| | | | | HC[c] | CO[c] | $NO_x$[c] | System Deterioration[d] |
| 0 | 1972 | EM*[a] | — | 1 ± 0.375 | 1 ± 0.375 | 1 ± 20 | L |
| 1 | 1973 Federal | EM* + EI + FC + AI + EGR | 7 ± 3 | 1.35 ± 0.30 | 1.0 ± 0.23 | 0.6 ± 0.10 | L |
| 2 | 1975 Federal | EM* + EI + IC + QHI + AI + EGR | 5 ± 2 | 0.65 ± 0.15 | 0.55 ± 0.15 | 0.06 ± 0.10 | L |
| 3 | 1975 Calif. | EM* + EI + IC + QHI + EGR + AI + OC | 8 ± 2 | 0.18 ± 0.05 | 0.15 ± 0.03 | 0.06 ± 0.10 | M (HC, CO)<br>L ($NO_x$) |

[a]1972 baseline engine: modifications included in the baseline engine configuration are retard, lean air-to-fuel, and reduced compression ratio.

Component Identification

EM - Engine modifications; retard, air-to-fuel, compression ratio
EI - Electronic ignition
FC - Fast choke
QHI - Quick heat intake
AI - Exhaust manifold air injection
EGR - Exhaust gas recirculation
IC - Improved carburetion
OC - Oxidizing catalyst

[b]Reduction factor defined as: $\frac{\text{control system emissions}}{\text{1972 baseline emissions}}$ based on LA-4 driving cycle

[c]All emissions data taken using or corrected to 1975 CVS-CH test procedure

[d]Deterioration of present systems; L = 10%, M = 10 - 30%, H = 30%

- $NO_x$ control technology for automotive applications can be adapted to stationary engines; however, $NO_x$ reductions and attendant fuel penalties for automotive applications are closely related to the load cycle, which in some cases may differ from stationary applications
- Viable control techniques may involve an operational adjustment, hardware addition, or a combination of both
- Additional research is necessary to
  - Establish controlled levels for gaseous-fueled engines (<75 kW/cylinder, or 100 hp/cylinder)
  - Establish controlled levels for medium-powered diesel and gasoline engines based on stationary application load cycles
  - Supplement the limited emissions data available for large bore engines

4.3.1.2 Costs

As discussed earlier, stationary engines are unregulated for gaseous pollutants. Consequently, few data are available for field-tested controlled engines, particularly for large (>375 kW or 500 hp) engines. Sufficient data exist, however, to give order or magnitude $NO_x$ control costs for the following engine categories:

- Natural gas-, dual-, and diesel-fueled engines above 75 kW/cylinder (100 hp/cylinder)
- Small to medium (<75 kW/cylinder) diesel-fueled engines
- Gasoline-fueled engines (10 kW to 375 kW)

Costs for large stationary engines can be estimated based on Reference 4-82 and information supplied by Reference 4-80 (1974 costs). These costs, however, relate to emission reduction achieved by engines tested in laboratories rather than to field installations. Reference 4-83 indicates, nevertheless, that these data are representative (1972 costs).

In contrast to the large stationary engines, more published cost data exists for smaller (<375 kW, 500 hp) gasoline and diesel engines which must meet State (California) and Federal emission limits for mobile applications. Stationary engines in this size range are versions of these mobile engines. Therefore, costs can be estimated based on a technology transfer from mobile applications to stationary service, keeping in mind that in some cases mobile-duty cycles (variable

load) can differ from stationary-duty cycles (rated load). Hence, costs (e.g., fuel penalties) associated with a control technique used in a stationary application may vary from the mobile case.

Control costs for the three categories discussed above may include:

- Initial cost increases for control hardware and/or equipment associated with a particular control (e.g., larger radiator for manifold air cooling or more engines as a result of derating)
- Operating cost increases which consist of either increased fuel consumption and/or increased maintenance associated with $NO_x$ control system
- Combinations of initial and operating cost increases

Control Costs for Large Bore Engines

TABLE 4-39 lists cost impacts for control techniques available to users of large stationary engines. These cost impacts may be related to actual installations using baseline data presented in TABLE 4-40 (1974 costs). In practice, these figures vary depending on the application, but, in general, they are representative of the majority of applications. Basically, these controls involve an operating adjustment with the exception of derating and manifold air cooling, which would require hardware additions. Derating is not a viable technique for existing installations unless additional units can be added to satisfy total power requirements.

The impact of the above control costs may vary considerably given the following considerations:

- Standby (<200hr/yr) application control costs are primarily a result of initial cost increases due to the emission control, whereas continuous service (>6000 hr/yr) control costs are largely a function of fuel consumption penalties
- Controls which require additional hardware with no associated fuel penalty (e.g., manifold air-cooling) may be more cost effective in continuous service (>6000 hr/yr) than operating adjustments which impose a fuel penalty (e.g., retard, or air-to-fuel change)
- The price of fuel can affect the impact of a control which incurs a fuel penalty. For example, a control which imposes a fuel penalty of 5 percent for both gas and diesel engines has more impact on the diesel fueled engine because diesel oil costs about 40 percent more per Joule than natural gas. This impact will diminish if gas prices increase more rapidly than oil prices.

TABLE 4-39. COST IMPACTS OF $NO_x$ CONTROLS FOR LARGE-BORE ENGINES

| Control | Cost Impact |
|---|---|
| Retard | Increased fuel consumption, more frequent maintenance of valves |
| Air-to-fuel changes | Increased fuel consumption, more frequent maintenance of turbocharger |
| Derate | Fuel penalty, additional hardware, and increased maintenance associated with additional units |
| Manifold air cooling | Increased cost to enlarge cooling system, and increased maintenance for cooling tower water treatment |
| Combinations of above | Initial, fuel, and maintenance |
| Control techniques | Increases as appropriate |

TABLE 4-40. TYPICAL 1974 BASELINE COSTS FOR LARGE (>75 KW CYLINDER) ENGINES[a]

| Costs | Gas | Dual Fuel | Diesel |
|---|---|---|---|
| 1. Initial,[b] $/kW | 174 | 174 | 174 |
| 2. Maintenance, $/kWh | $4 \times 10^{-3}$ | $4 \times 10^{-3}$ | $4 \times 10^{-3}$ |
| 3. Fuel and lube, $/kWh | $10 \times 10^{-3}$ | $10 \times 10^{-3}$ | $23 \times 10^{-3}$ |
| Total Operating, 2 + 3 | $14 \times 10^{-3}$ | $14 \times 10^{-3}$ | $27 \times 10^{-3}$ |

[a]Based on Reference 4-82 and information supplied to Reference 4-80 by manufacturers.

[b]Includes basic engine and cooling system.

Control Costs for Small and Medium Gasoline- and Diesel-Fueled Engines

Control costs for these engines can be characterized by analogy to those incurred to meet State and Federal emission limits for automotive vehicles. Again, these costs consist of initial purchase price increases for control hardware and increased operating costs (fuel and maintenance cost increases).

Table 4-41 lists typical costs for techniques implemented for 1975 diesel-fueled truck engines (1974 costs). These costs are presented to indicate order of magnitude effects. More research is required to relate specific emission control reductions to initial and operating cost increases for stationary engine applications.

Table 4-42 gives control hardware costs to meet gasoline-fueled passenger vehicle emission limits through 1976 (1973 costs). Note that cost increases correspond to increasingly more complex controls to meet more stringent emission limits.

TABLE 4-41. TYPICAL CONTROL COSTS FOR DIESEL-FUELED ENGINES USED IN HEAVY-DUTY VEHICLES (>2700 kg OR 3 tons)

| | |
|---|---|
| Vehicles[a] | |
| Initial | |
| baseline: engine | $40-$67/kW ($30-$50/hp) |
| baseline: cooling system | 8%-14% engine |
| turbocharger | $4/kW ($3/hp) |
| aftercooler | 6%-10% engine |
| EGR | $3-$4/kW ($2-$3/hp) |
| Operating | |
| Fuel: | Fuel penalties range from 3 to 8 percent for various techniques. Typical present fuel cost: $0.095/liter ($0.36/gallon) #2 diesel or $2.13-$2.37/GJ ($2.25-$2.50/$10^6$ Btu). |
| Maintenance: | EGR system will require periodic cleaning. Note that turbocharged, aftercooled engines require additional maintenance for the turbocharger and aftercooler compared to a similarly rated naturally aspirated version. |

[a]Based on information supplied to Reference 4-80 by manufacturers (1974 costs).

TABLE 4-42. ESTIMATES OF STICKER PRICES FOR EMISSIONS HARDWARE FROM 1966 UNCONTROLLED VEHICLES TO 1976 DUAL-CATALYST SYSTEMS (Reference 4-81, Costs Taken From A 1973 Report)

| Model Year | Configuration | Typical Hardware | | | |
|---|---|---|---|---|---|
| | | Value Added | Price | Excise Tax | Sticker Price |
| 1966 | PCV-Crank Case | 1.90 | 2.85 | 0.15 | 3.00 |
| 1968 | Fuel Evaporation System | 9.07 | 14.25 | 0.75 | 15.00 |
| 1970 | Carburetor Air/Fuel Ratio | 0.61 | 0.95 | 0.05 | 1.00 |
| | Compression Ratio | 1.24 | 1.90 | 0.10 | 2.00 |
| | Ignition Timing | 0.61 | 0.95 | 0.05 | 1.00 |
| | Transmission Control System | 2.49 | 3.80 | 0.20 | 4.00 |
| | Total 1970 | | | | 8.00 |
| 1971-1972 | Anti-Dieseling Solenoid | 3.07 | 4.75 | 0.25 | 5.00 |
| | Thermo Air Valve | 2.49 | 3.80 | 0.20 | 4.00 |
| | Choke Heat Bypass | 2.74 | 4.18 | 0.22 | 4.40 |
| | Assembly Line Tests, Calif (1/10 vol) | 0.18 | 0.57 | 0.03 | 0.60 |
| | Total 1971-1972 | | | | 14.00 |
| 1973 | OSAC (Spark Advance Control) | 0.48 | 0.95 | 0.05 | 1.00 |
| | Transmission Changes (some models) | 0.63 | 0.95 | 0.05 | 1.00 |
| | Induction Hardened Valve Seats (4 and 6 cyl) | 0.72 | 1.90 | 0.10 | 2.00 |
| | EGR (11 — 14%) Exhaust Recirculation | 5.48 | 9.50 | 0.50 | 10.00 |
| | Air Pump — Air Injection System | 27.16 | 43.32 | 2.28 | 45.60 |
| | Quality Audit, Assembly Line (1/10 vol) | 0.23 | 0.38 | 0.02 | 0.40 |
| | Total 1973 | | | | 60.00 |

TABLE 4-42. ESTIMATES OF STICKER PRICES FOR EMISSIONS HARDWARE FROM 1966 UNCONTROLLED VEHICLES TO 1976 DUAL-CATALYST SYSTEMS (Reference 4-81) (Concluded)

| Model Year | Configuration | Typical Hardware | | | |
|---|---|---|---|---|---|
| | | Added | List Price | Excise Tax | Sticker Price |
| 1974 | Induction Hardened Valve Seat V-8 | 0.72 | 1.90 | 0.10 | 2.00 |
| | Some Proportional EGR (1/10 vol at $52) | 3.21 | 4.94 | 0.26 | 5.20 |
| | Precision Cams, Bores, and Pistons | 2.44 | 3.80 | 0.20 | 4.00 |
| | Pretest Engines — Emissions | 1.80 | 2.85 | 0.15 | 3.00 |
| | Calif. Catalytic Converter System (1/10 vol at $64) | 4.02 | 6.08 | 0.32 | 6.40 |
| | Total 1974 | | | | 20.60 |
| 1975 | Proportional EGR (acceleration-deceleration) | 20.07 | 30.02 | 1.58 | 31.60 |
| | New Design Carburetor with Altitude Compensation | 7.52 | 14.25 | 0.75 | 15.00 |
| | Hot Spot Intake Manifold | 2.87 | 4.75 | 0.25 | 5.00 |
| | Electric Choke (element) | 2.67 | 4.75 | 0.25 | 5.00 |
| | Electronic Distributor (pointless) | 4.35 | 9.50 | 0.50 | 10.00 |
| | New Timing Control | 1.40 | 2.85 | 0.15 | 3.00 |
| | Catalytic — Oxidizing-Converter | 18.86 | 34.20 | 1.80 | 36.00 |
| | Pellet Charge (6 lb at $2/lb) | 12.00 | 20.52 | 1.08 | 21.60 |
| | Cooling System Changes | 1.17 | 1.90 | 0.10 | 2.00 |
| | Underhood Temperature Materials | 0.63 | 0.95 | 0.05 | 1.00 |
| | Body Revisions Welding Presses | 0.67 | 1.90 | 0.10 | 2.00 |
| | Assembly Line Changes | 0.13 | 0.95 | 0.05 | 1.00 |
| | End of Line Test Go/No-Go | 1.85 | 2.85 | 0.15 | 3.00 |
| | Quality Emission Test | 1.22 | 1.90 | 0.10 | 2.00 |
| | Total 1975 | | | | 138.20 |
| 1976 | 2 $NO_x$ Catalytic Converters* | 22.00 | 37.05 | 1.95 | 39.00 |
| | Electronic Control[a] | 28.00 | 47.50 | 2.50 | 50.00 |
| | Sensors[a] | 3.00 | 5.70 | 0.30 | 6.00 |
| | Total 1976 | | | | 134.00 |

[a]1976 most common configuration

Figure 4-7 illustrates the effect of various control techniques on fuel economy. Fuel cost increases can be easily derived from typical gasoline costs, presently $0.55-0.75/gallon. In addition to this operating expense, control techniques utilizing catalysts and EGR require periodic maintenance.

Manufacturers, in addition, incur certification costs for gasoline and diesel-fueled engines which must meet State and Federal regulations. These costs are passed on to the user in the form of increased initial costs. Manufacturers of diesel-fueled engines report these costs range from $50,000 to $100,000 for a particular engine family (1972 costs). This can result in a $125 cost per engine based on a low sales volume family.

#### 4.3.1.3 Energy and Environmental Impact

The energy impacts of applying $NO_x$ controls to stationary reciprocating IC engines are manifested almost exclusively through corresponding increases in fuel consumption (bsfc). Typical percentage increases as a function of applied control were discussed in detail previously in Sections 4.3.1.1 and 4.3.1.2.

Potential adverse environmental impacts occur through increases in emissions of combustion-generated pollutants other than $NO_x$ attendant to applying a $NO_x$ control. Since IC engines emit only an exhaust gas effluent stream, impacts through liquid and solid effluents need not be considered. In addition, since IC engines fire "clean" fuels (natural gas and distillate oil) incremental effects on the emissions of such pollutants as $SO_x$ and trace metals are relatively unimportant. Thus, the following discussion will focus on the measured effects of specific $NO_x$ control techniques on incremental emission of CO, HC, and particulate (smoke). Again, all available data were obtained in tests on laboratory engines. Nevertheless, such data should be representative.

Carbon Monoxide

As discussed in Section 4.3.1.1, the most common $NO_x$ reduction techniques applied to IC engines include derating, ignition retard, altering air/fuel (A/F) ratios, reducing manifold air temperatures (MAT), and water injection. The effects of each of these $NO_x$ controls on engine CO emission levels are summarized in Table 4-43.

As indicated, baseline CO emissions from two-cycle engines are generally lower than those from four-cycle engines. However, derating two-cycle engines increases CO emissions 50 to 100 percent, while derating four-cycle engines actually gives a 60 to 100 percent decrease in CO levels.

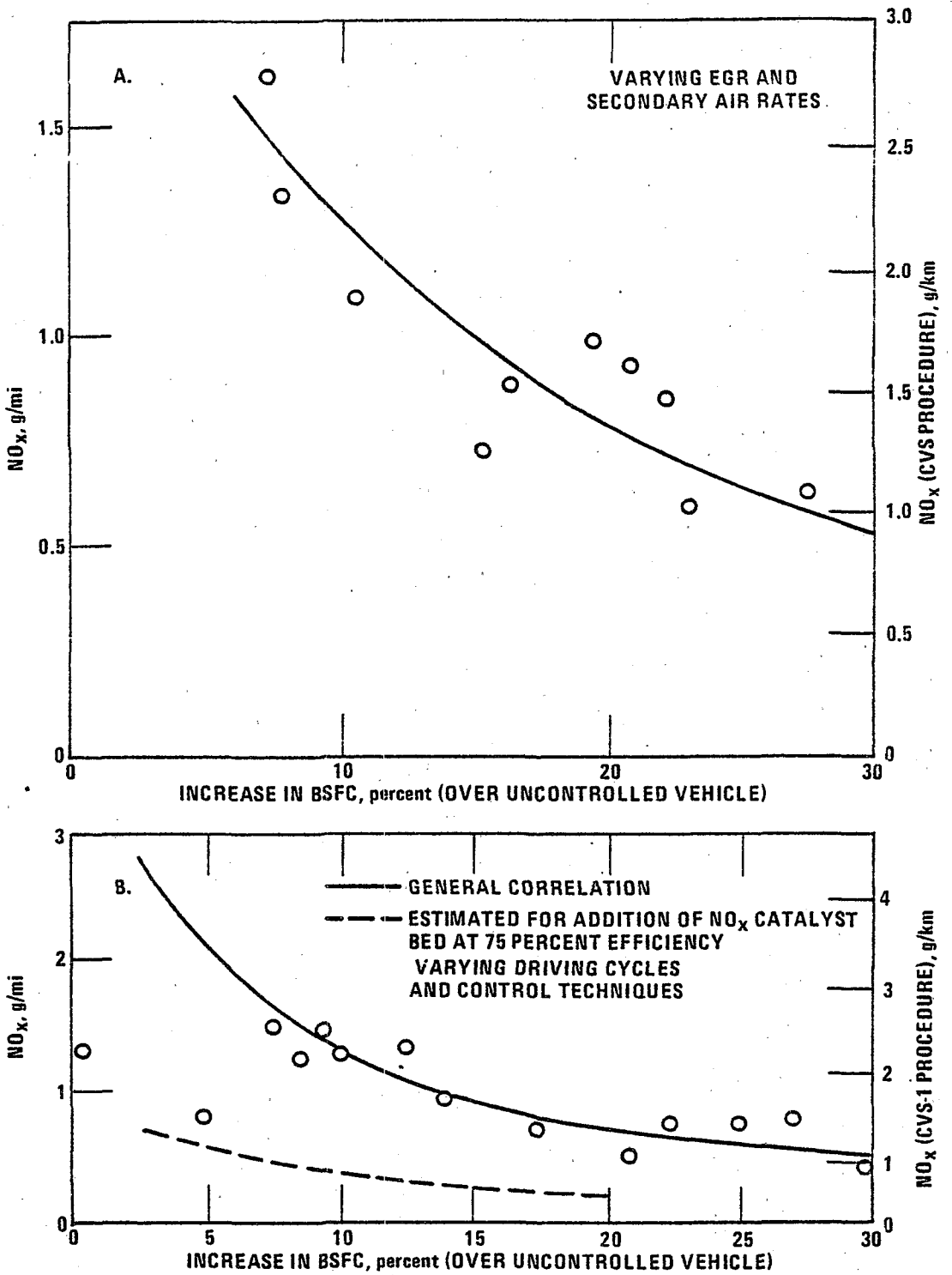


Figure 4-7. Effect of $NO_x$ emissions level on fuel penalty for light duty trucks (Reference 4-83).

Table 4-43. *REPRESENTATIVE EFFECTS OF $NO_x$ CONTROLS ON CO EMISSIONS FROM INTERNAL COMBUSTION ENGINES*[a] (Reference 4-80).

| Fuel | Engine Type | Baseline Emissions (ng/J) | $NO_x$ Control CO Emissions (ng/J) | | | | | |
|---|---|---|---|---|---|---|---|---|
| | | | Derate | Retard Ignition | Increase A/F | Decrease A/F | Reduce MAT | Water Injection |
| Natural Gas | 2-cycle | 15 - 40 | 40 - 94 | 35 - 45 | 29 - 31 | -- | 29 - 45 | -- |
| | 4-cycle | 75 - 3350 | 54 - 150 | 80 - 1000 | --[b] | 117 | 131 | 194 |
| Diesel | 2-cycle | 72 - 325 | 89 | 140 - 628 | -- | -- | 71 | 464 |
| | 4-cycle | 114 - 546 | 100 - 180 | 260 - 654 | 439 | 675 | 142 - 550 | 460 - 606 |
| Dual Fuel | 2-cycle | 165 | 244 | 244 - 267 | -- | 244 | 67 | -- |
| | 4-cycle | 200 - 670 | 289 | 679 - 1070 | 288 | 296 | 632 | 503 - 507 |

[a]This table is included in Appendix A in English units.
[b]Denotes no data reported.

Retarding ignition generally causes increased CO output for all engines. This is somewhat expected, though, since retarding ignition decreases both peak combustion temperature and combustion gas residence time, which can lead to incomplete combustion. Both increasing A/F ratios and reducing manifold air temperature (MAT) has little effect on CO levels. However, decreasing A/F causes 50 to 100 percent increases in CO emissions. Water injection seems not to affect CO emissions from gas and dual fuel engines, but increases diesel engine CO emissions by 60 to 130 percent.

Hydrocarbons

The use of $NO_x$ combustion controls on IC engines can also have significant effects on HC emissions, with different $NO_x$ reduction techniques eliciting different effects.

As shown in Figure 4-8,, derating causes HC emissions to increase, with the increase becoming more pronounced as load is further reduced. As the figure illustrates, derating can cause a 20 to 130 percent increase in HC emissions. Figure 4-9 shows the effect of ignition retard on incremental HC emissions. In contrast to the effects of engine derating, ignition retard tends to decrease slightly or not affect emissions of HC. However, in cases where retarding ignition initially reduces HC emissions, increasing the degree of ignition retard seems to have little further effect. The data in the figure indicate that HC emissions decrease on the average of 30 percent when ignition is retarded 3 to 8 degrees.

Changing the air-to-fuel (A/F) ratio, decreasing manifold air temperature (MAT) and water injection can all result in increased HC emissions. As shown in Figure 4-10, both increasing and decreasing the A/F ratio by 10 percent increases HC levels 20 to 65 percent. Larger percentage increases occur in engines with high baseline emissions. Figure 4-11 shows analogous effects when MAT is decreased. Decreasing 10 to 20 K (20 to 40 F) increases HC emissions 5 to 50 percent. HC levels increase as MAT is further reduced. Turbocharged engines exhibit the largest percentage emissions increases. Water injection also increases HC emissions from IC engines regardless of the baseline HC level, as shown in Figure 4-12. Average increases of 16 to 25 percent have been experienced for water/fuel (W/F) ratios of 0.1 to 0.25.

Particulates

Virtually no data are available specifically on particulate emission rates from stationary IC engines because it is difficult, time consuming, and expensive to measure particulate emissions from these engines directly. Instead, exhaust gas opacity readings have been used as a substitute measure of particulate emissions. These readings effectively measure particulate since a relationship between visible smoke and particulate mass emissions has been established for medium power

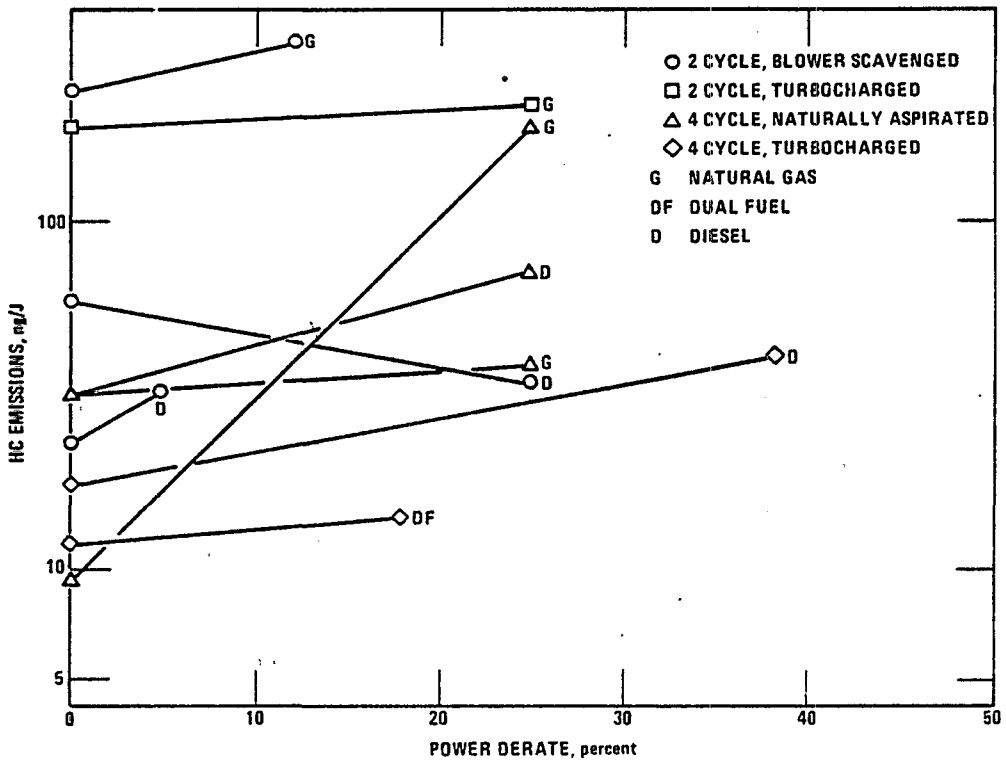


Figure 4-8. Effect of derating on IC engine HC emissions (Reference 4-80).

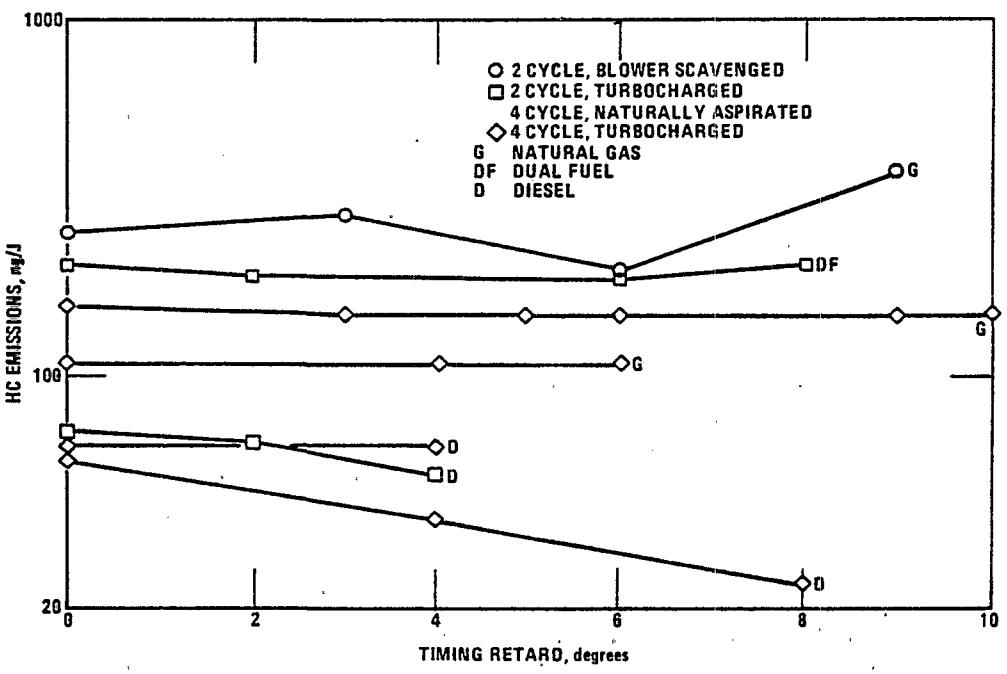


Figure 4-9. Effect of retarding ignition timing on IC engine HC emissions (Reference 4-80).

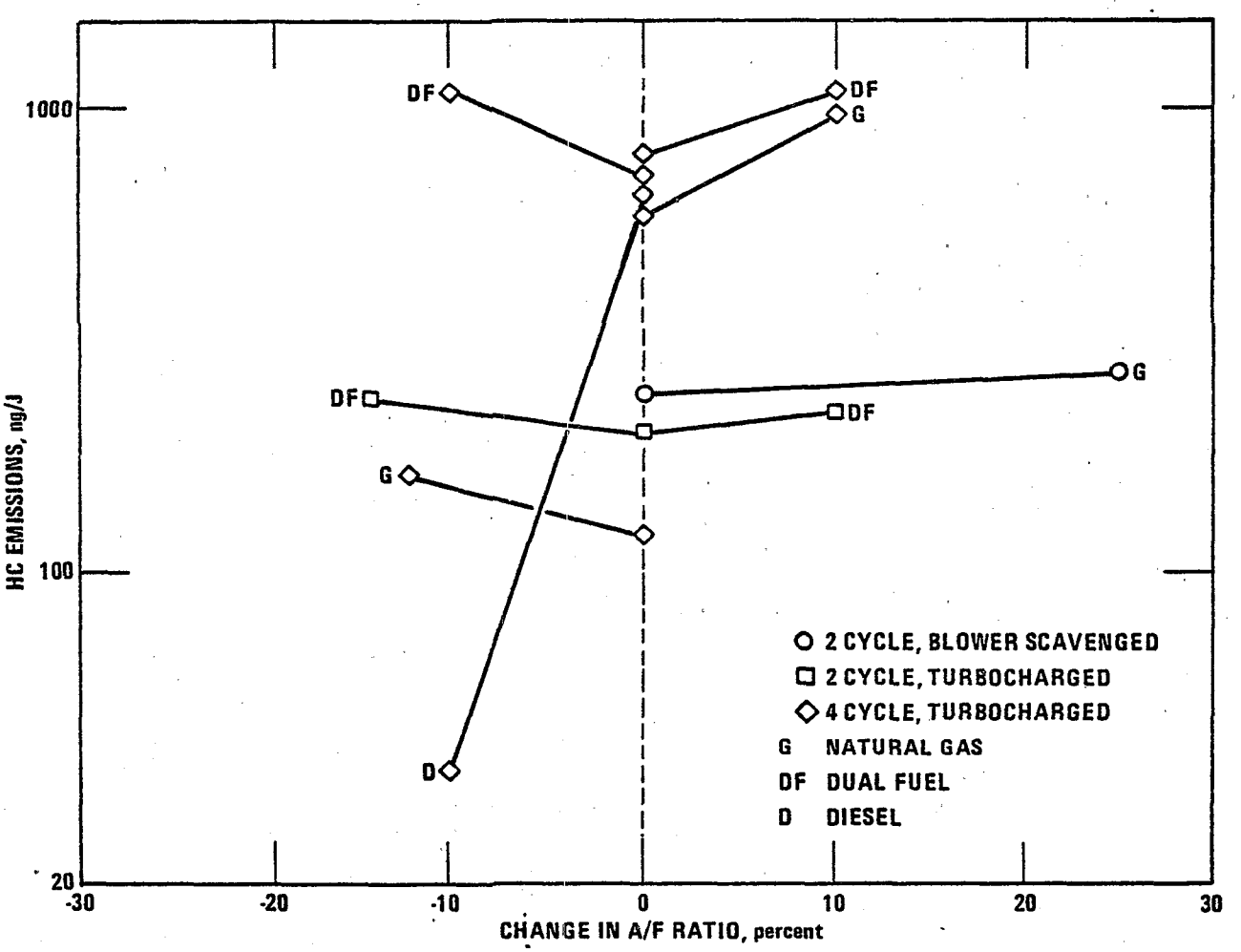


Figure 4-10. Effect of air-to-fuel ratio on IC engine HC emissions (Reference 4-80).

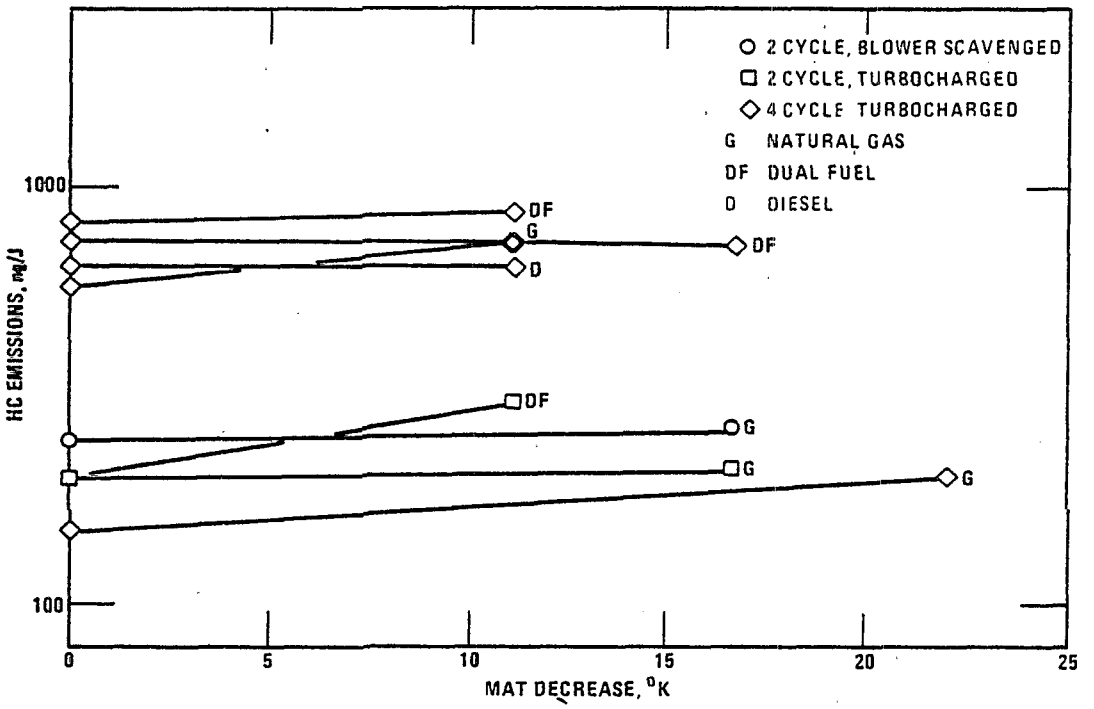


Figure 4-11. Effect of decreased manifold air temperature (MAT) on IC engine HC emissions (Reference 4-80).

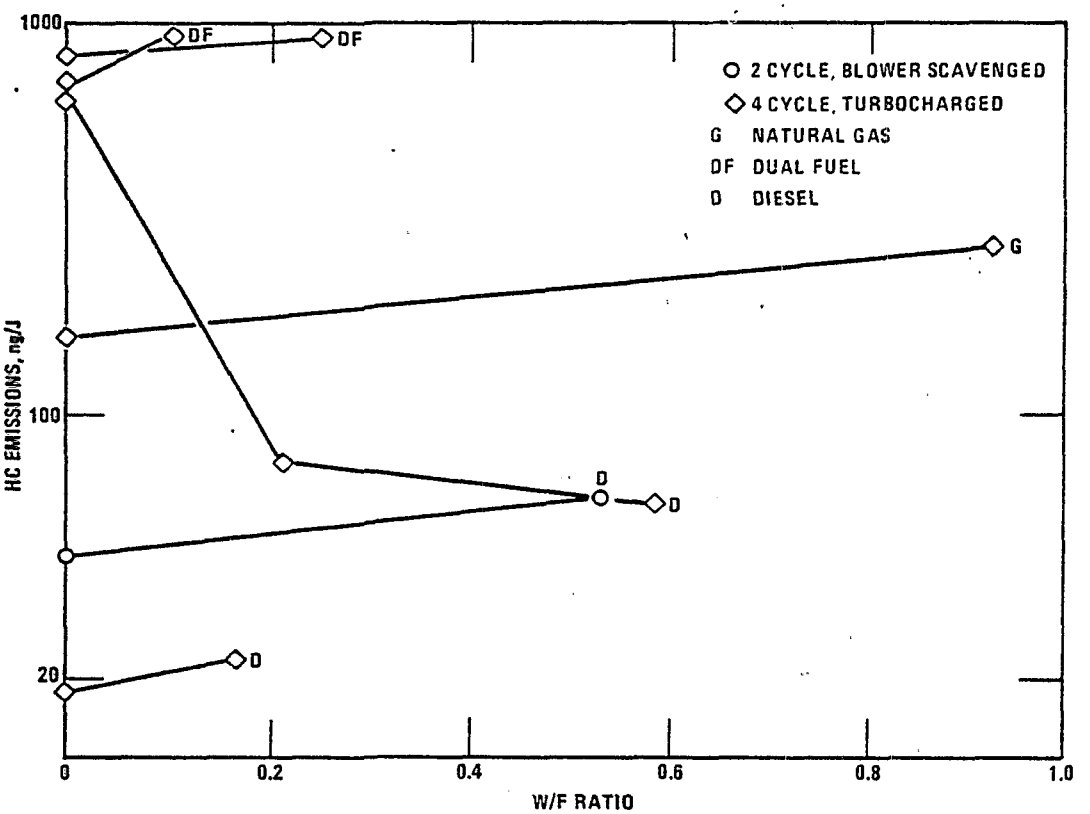


Figure 4-12. Effect of water injection in IC engine HC emissions (Reference 4-80).

diesel engines (Reference 4-84 and 4-85). Therefore, IC engine smoke emissions are generally reported as percent plume opacity, or as Bosch or Bacharach smoke spot numbers.

The plumes from most large-bore engines are nearly invisible when the engine is operating at steady-state. However, applying $NO_x$ combustion controls can significantly affect smoke emissions. Figure 4-13 shows the relationship between smoke emissions and $NO_x$ reduction as a function of $NO_x$ control for those engines where data were reported on both pollutants. As the figure shows, $NO_x$ controls, other than derating, generally increase smoke emissions, while derating decreases smoke levels. Ignition retard and exhaust gas recirculation (EGR) cause the most significant increases in smoke level.

Since $NO_x$ controls which caused smoke levels to exceed 10 percent opacity were considered unacceptable in the tests summarized in Figure 4-13 none of the data points for controlled engines are above this value. However, the effect of progressively applying ignition retard and EGR on smoke emissions is best demonstrated by data which include higher smoke levels. Such data are presented in Table 4-44 for two-cycle diesel engines, and clearly show that smoke emissions increase progressively as percentage EGR or degree of retard is increased.

In summary, experimental data have shown that applying conventional combustion modification $NO_x$ controls to IC engines can cause increases in CO, HC, and particulate (smoke) emissions. This is so because the combustion conditions required to prevent $NO_x$ formation generally lead to less complete combustion.

### 4.3.2 Gas Turbines

Gas turbines contributed only 2 percent of the annual stationary source $NO_x$ emissions in 1974, or 236 Gg ($2.6 \times 10^5$ tons). They do, however, comprise a very rapidly growing source with increasing application in intermediate and base load power generation, pipeline pumping, natural gas compression, and onsite electrical generation. The increasing application of gas turbines carries with it the potential for increasing the $NO_x$ emission contribution from these sources. In response to this, the frequency of control technique demonstration and implementation has increased in the past several years.

Uncontrolled $NO_x$ emissions are a function of turbine size (or efficiency) and fuel type. Increasing the turbine size (or efficiency) increases the $NO_x$ concentrations primarily due to higher combustion temperatures and to increased residence time at high temperatures. Oil-fired turbines generally have higher $NO_x$ concentrations than gas-fired units. Typical uncontrolled $NO_x$ emissions from gas turbines are illustrated in Figures 4-14 and 4-15 for large and small units, respectively.

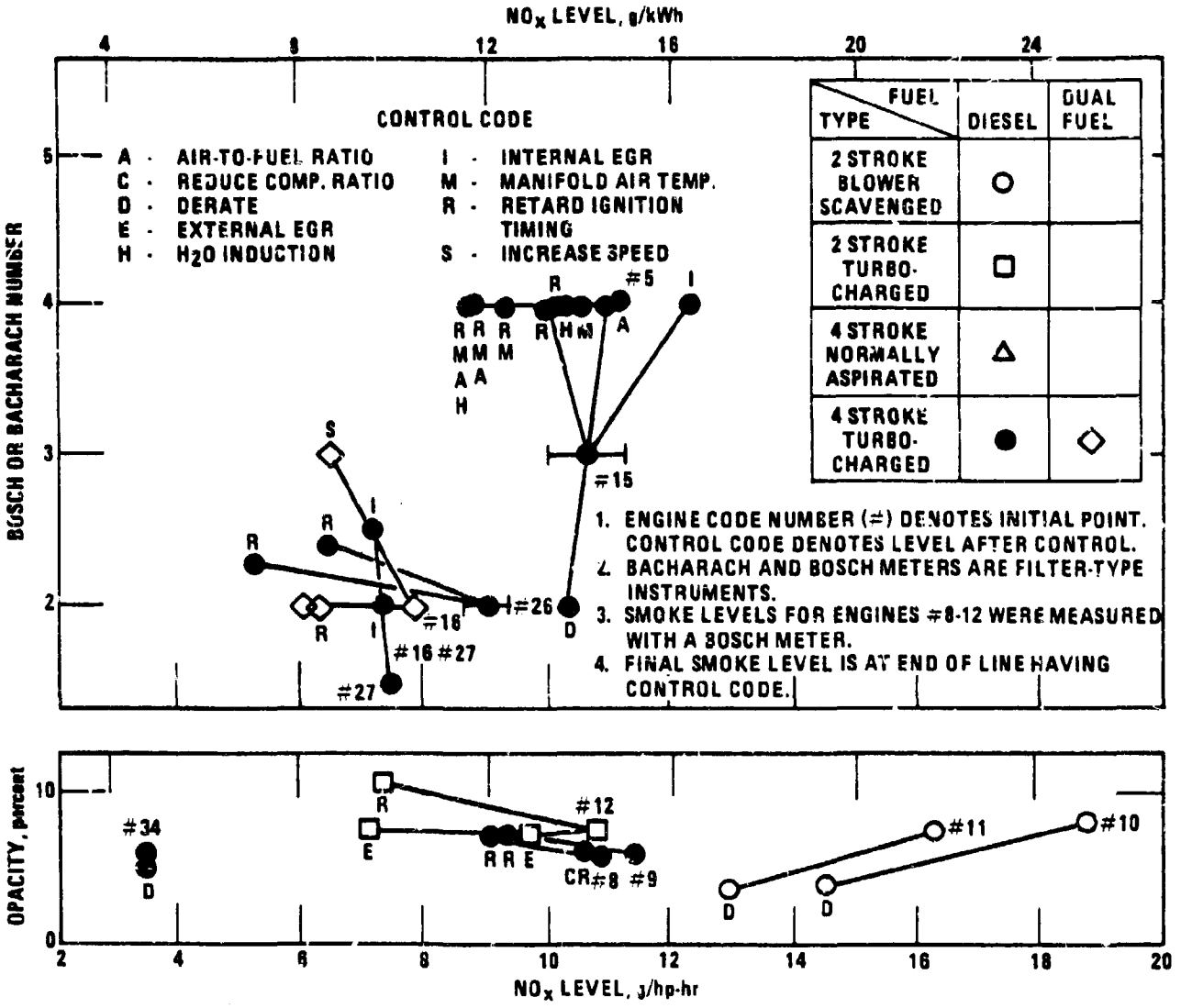


Figure 4-13. Smoke levels versus $NO_x$ levels for large bore diesel engines.

TABLE 4-44. RELATIONSHIP BETWEEN SMOKE, EGR, AND RETARD (Reference 4-80).

| Engine Type | Control [a] | Opacity, % |
|---|---|---|
| 2-cycle, Blower Scavenged Diesel | None | 4.7 |
| | 10% EGR | 12 |
| | 20% EGR | 27.5 |
| | 39% EGR | 59 |
| | 4° advance[b] | 2.7 |
| | None | 4.6 |
| | 4° retard | 10 |
| 2-cycle, Turbocharged Diesel | None | 7.5 |
| | 4.9% EGR | 10.0 |
| | 8.4% EGR | 11.5 |
| | 12.1% EGR | 14.8 |

[a]All EGR data based on hot EGR.

[b]Injection advance is not a control; data included to show trend.

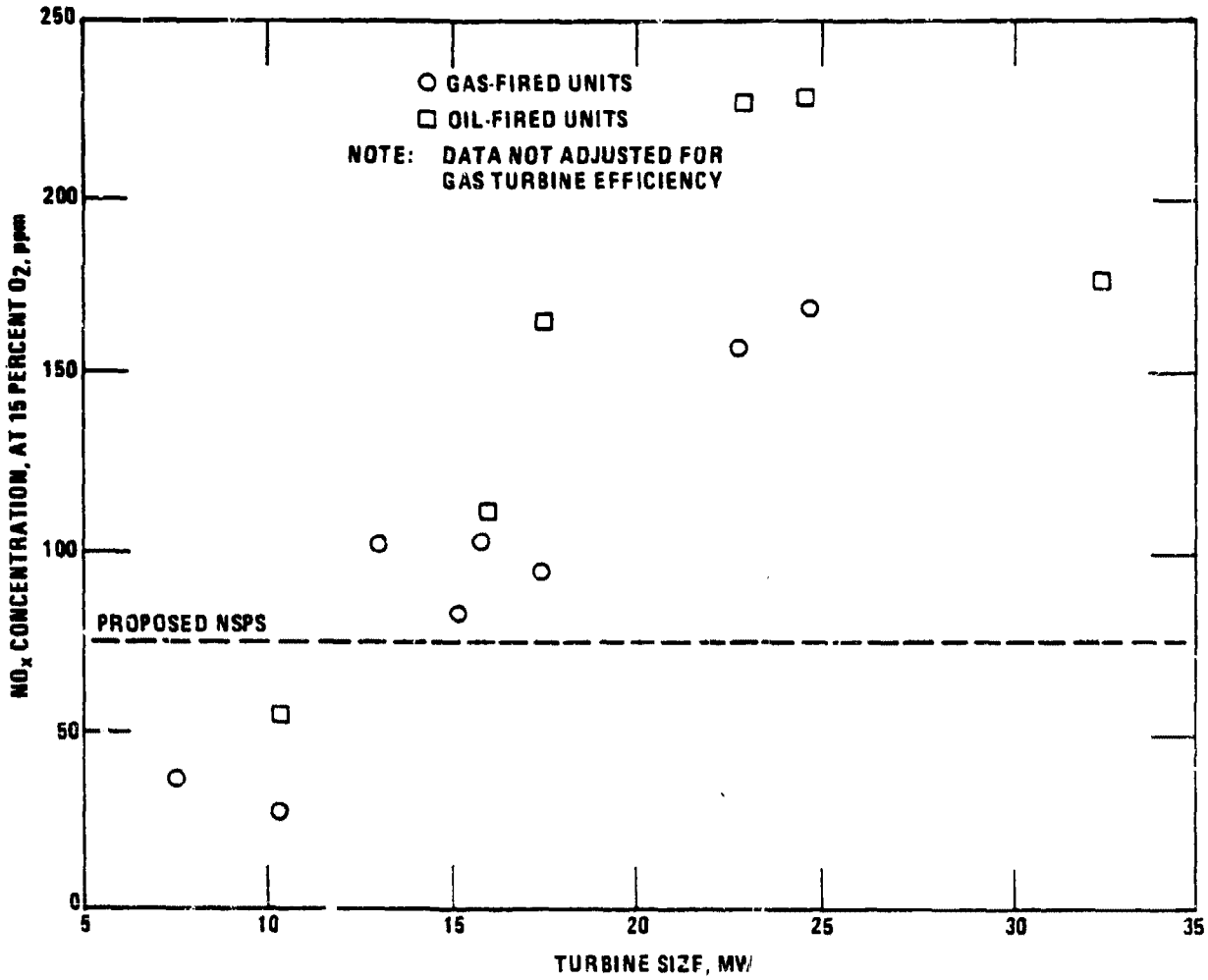


Figure 4-14. $NO_x$ emissions from large gas turbines without $NO_x$ controls (Reference 4-86).

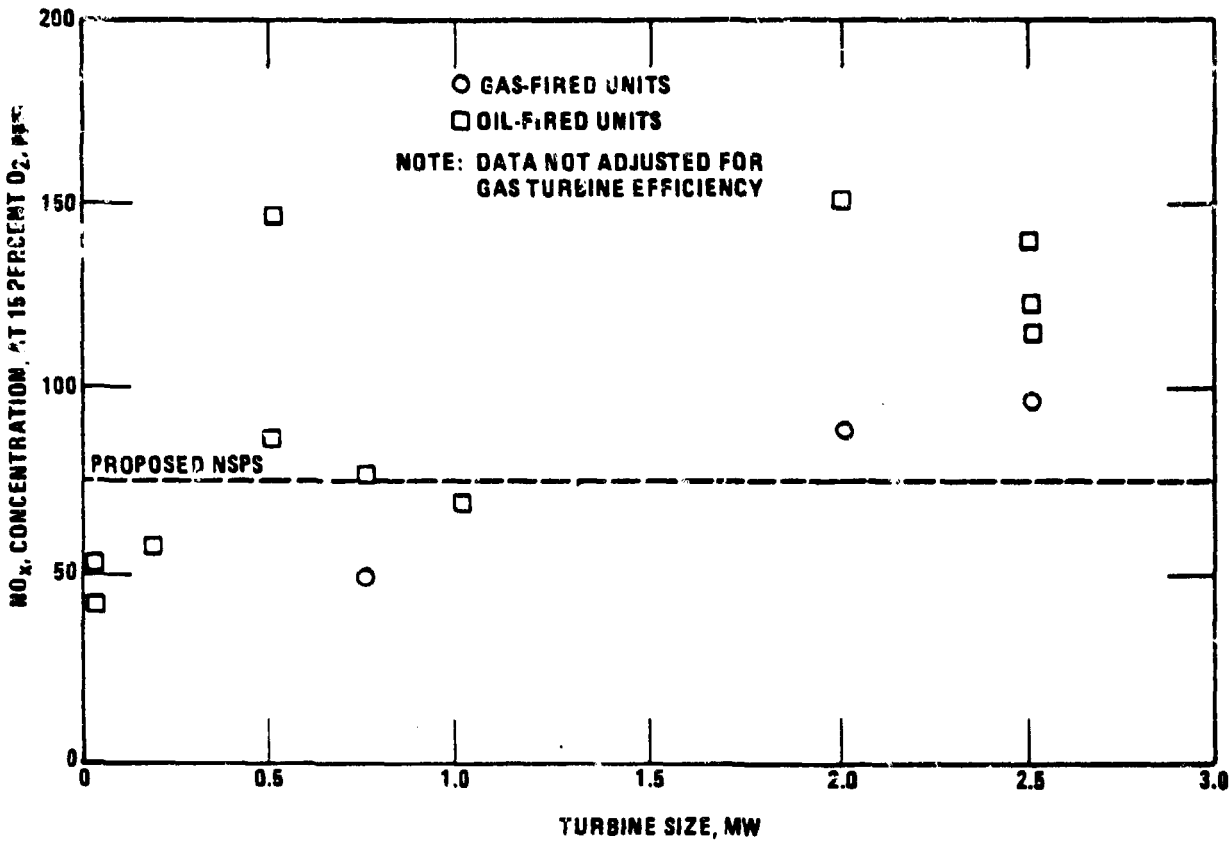


Figure 4-15. $NO_x$ emissions from small gas turbines without $NO_x$ controls (Reference 4-86).

Imposed on these figures is the proposed NSPS of 75 ppm for these sources. Very few units meet these standards in the uncontrolled state.

#### 4.3.2.1 Control Techniques

Combustion modification techniques for gas turbines differ from those of boilers since turbines operate at a lean air/fuel ratio with the stoichiometry determined primarily by the allowable turbine inlet air temperature. The turbine combustion zone is nearly adiabatic and flame cooling for $NO_x$ control is achieved through dilution rather than radiant cooling. The majority of $NO_x$ formation in gas turbines is believed to occur in the primary mixing zone, where locally hot stoichiometric flame conditions exist. The strategy for $NO_x$ control in gas turbines is to eliminate the high temperature stoichiometric regions through water injection, premixing, improved primary zone mixing, and downstreamed dilution.

Combustion modifications for gas turbines are classified into wet and dry techniques. Wet methods, such as water and steam injection, presently provide substantial reductions. As yet, no combination of dry methods has been successful on field units in reducing emissions below a typical standard of 75 ppm $NO_x$ at 15 percent oxygen. Presently available wet and dry methods for $NO_x$ reduction are aimed at either reducing peak flame temperature, reducing residence time at peak flame temperature, or both. These techniques, along with their reduction potential and future prospects, are shown in TABLE 4-45.

Wet techniques are the most effective methods yet implemented with reduction potentials as high as 90 percent for gas and 70 percent for oil fuels. With wet control, water or steam is introduced into the primary zone either by premixing with the fuel prior to injection into the combustion zone, by injection into the primary airstream, or by direct injection into the primary zone. The effectiveness of each method is strongly dependent on atomization efficiency and primary zone residence time. In the case of water injection, peak flame temperatures are reduced further through vaporization of the water.

Although $NO_x$ reduction is quite effective, numerous difficulties offer incentive to the development of dry controls. If dry controls are developed as expected, the long-term future of wet control does not appear promising based on the following inherent problems of wet controls:

- Requirements for "clean" water or high-pressure steam
- Hardware requirements which increase plant size
- Delivery system hardware which results in increased failure potential and overhaul/maintenance time

TABLE 4-45. GAS TURBINE - SUMMARY OF EXISTING TECHNOLOGY - COMBUSTION MODIFICATIONS

| Modification | Approach to $NO_x$ Control | Reduction Potential | Near Term | Far Term | Additional Comments | Refs. |
|---|---|---|---|---|---|---|
| **Wet Controls** | | | | | | |
| Water Injection | Lower peak flame temp by utilization of heat capacity and heat of vaporization; most effective when injected into primary flame zone | 50-90+ % | To date, most effective measure, reasonable cost | Not as attractive as dry controls, but is adequate if dry not developed | Reduces efficiency, increases capital costs up to 10%. Operating costs as low as 1% depending on usage. Hindered by requirement for "clean" water supply. Ineffective in reducing fuel $NO_x$. | 4-81<br>4-86<br>4-87<br>4-88 |
| Steam Injection | Same as above | 50-90+ % | To date, most effective measure after water injection | Same as above | Increases overall efficiency by increasing flowrate. Installation and operating costs same as water injection. Requires high pressure steam. Ineffective in reducing fuel $NO_x$. | |
| **Dry Controls** | | | | | | |
| Lean Out Primary Zone | Lower peak flame temp | 10-20% | Attractive option, requires additional controls to meet standards | Generally seen as an option to be incorporated into new low $NO_x$ designs | Possible decrease in power output, less control over flame stabilization | 4-81<br>4-86<br>4-88 |
| Increase Mass Flowrate | Reduce residence time at peak temperatures | To 15% | Attractive option if feasible | Not an attractive long term option due to inflexibility | Possible increase in shaft speed constant torque | 4-86 |
| Earlier Quench with Secondary Air | Reduce residence time | To 15% | Minor combustor modification used presently with wet controls | An attractive concept to be employed in advanced combustors | An attractive option both for near term minor combustor modifications and for incorporation into new designs. Limited by flowrates and incomplete combustion. | 4-81<br>4-86<br>4-89 |
| Air Blast or Air Assist Atomization | Reduce peak flame temp by increasing mixing thereby reducing local A/F ratio | To ~90% | Limited application for retrofit | Promising method to be incorporated into new low $NO_x$ design | Generally considered a new design concept | 4-86 |
| Reduce Inlet Preheat (Regenerative) | Reduce peak flame temp | Not Available | Not attractive due to thermal efficiency reduction | Not attractive for long term solution | Reduces efficiency. | 4-86 |
| Other Minor Combustor Modifications and Retrofit | Reduce peak flame temp through premixing, secondary air injection, primary zone flow recirculation | To 60% Combined | Attractive near term as an interim solution | Unknown at this time | With proper design, efficiency unimpaired | 4-86 |
| Exhaust Gas Recirculation | Reduce peak flame temperatures | To 38% | Option has seen use in minor combustor modifications | An attractive option for future design with internal combustors | Reduced efficiency requires additional controls. | 4-86 |
| Catalytic Combustion | Complete combustion at lower peak temperatures | To 98% | Technology not available | Attractive method for new combustor designs | Current research aimed at reducing reliability, maintainability, lifetime and start-up | 4-86 |

- Uncertainty regarding long-term control effects on turbine components.

Although few combinations of presently available dry controls have the $NO_x$ reduction potential of the wet methods, many dry techniques are used in conjunction with water or steam injection, particularly on larger units. On the smaller units, dry controls may be sufficient to meet standards. The dry controls now available are:

- Lean out primary zone — Reduces $NO_x$ levels up to 20 percent by lowering peak flame temperatures. This option allows less control over flame stabilization and reduces power output but is an attractive control to be built into future low $NO_x$ combustors.
- Increase mass flowrates — Possible $NO_x$ reductions up to 15 percent by reducing residence time at peak flame temperature. This control essentially increases the turbine speed at constant torque and is not feasible in many applications.
- Earlier quench with secondary air — This is a minor combustor modification which entails upstream movement of the dilution holes to reduce residence time at peak temperatures. This is a promising control which is generally employed in advanced combustor research.
- Reduce inlet air preheat — A control applicable only to regenerative cycle units. It is not attractive due to reduction in efficiency.
- Air blast and air assists atomization — Use of high-pressure air to improve atomization and mixing requires replacement of injectors and addition of high-pressure air equipment. This control is considered an excellent candidate for incorporation into new low $NO_x$ design combustors.
- Exhaust gas recirculation — Possible $NO_x$ reduction of 30 percent. A candidate dry control for future design, though it has limited application in some online units. EGR requires extensive retrofit relative to other dry controls and also requires a distinct set of controls for the EGR system.

Other minor combustor modifications are generally aimed at providing favorable interval flow patterns in the primary zone and fuel/air premixing. The bulk of these modifications are combustor-specific and are being investigated by the manufacturer. In general, dry controls available for immediate implementation have not exceeded 40 percent $NO_x$ reduction and as such may be insufficient controls for the larger units at present. Since dry techniques approach $NO_x$ reduction differently than do wet controls, their effects are complementary and, consequently, can be used together. Figure 4-16 illustrates the effect of dry and wet controls used separately and in combination

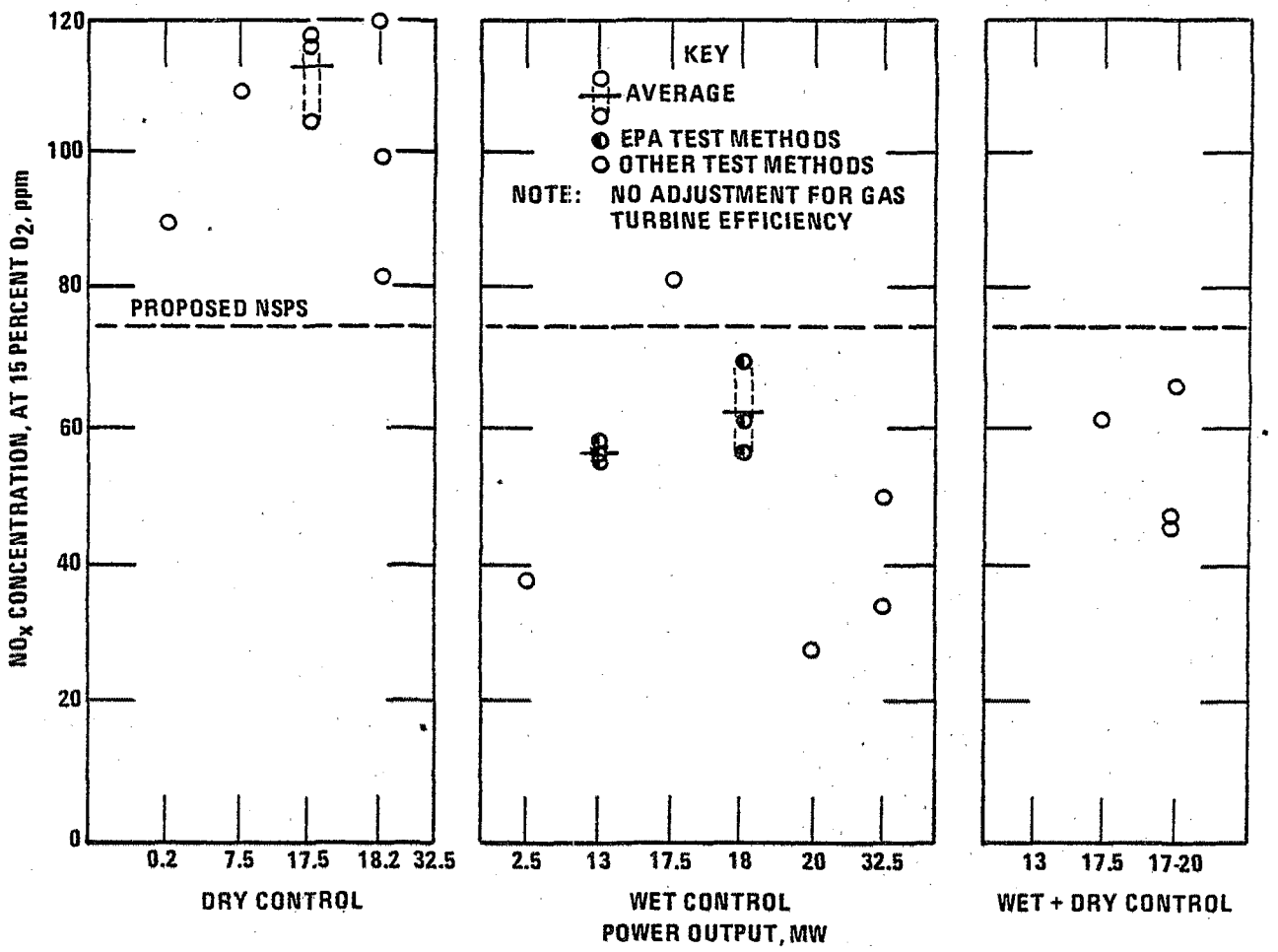


Figure 4-16. $NO_x$ emissions from gas turbines having $NO_x$ controls and operating on liquid fuels (Reference 4-86).

for liquid fuels (Reference 4-86). The figures show dry controls to be not sufficiently developed to meet the standards, whereas wet controls are sufficient.

Future $NO_x$ control in gas turbines is directed toward dry techniques with emphasis on combustor design. Medium term (1979-1985) combustor designs incorporate improved atomization methods or prevaporization and a premixing chamber prior to ignition. These developmental combustors are projected to attain emission levels of 20 ppm $NO_x$ at 15 percent oxygen. A possible long term option is catalytically supported combustion. Laboratory tests have given $NO_x$ reductions of up to 98 percent while maintaining stable, complete combustion. This concept — described in Section 3.1.5.2 of this report — will probably require a new combustor design to accomodate it (Reference 4-81 and 4-86).

#### 4.3.2.2 Costs

The most recent cost study of $NO_x$ controls for gas turbines has been performed by the EPA (Reference 4-86). Based on information presented in this study, the best available system of emission reduction considering costs are the wet systems. Wet systems can be applied to turbines immediately and their cost impact is minimal. Although dry control techniques may be preferable because of their minimal impact on efficienty, their complete development and application to large production turbines is still several years away. Cost considerations for dry methods are, therefore, not discussed. All costs in Reference 4-86 are stated in terms of 1975 dollars.

Table 4-46, derived from Reference 4-86, shows the expected increase in installed turbine cost that will result from using water injection to control $NO_x$ to the proposed standard of 75 ppm. The impact varies from 0.8 percent in the case of the 820 kW (1100 hp) standby unit to 7.1 percent for the unit requiring extensive water treatment equipment.

Table 4-47 presents a summary of the costs in mills/kWh which would be incurred for 11 simple cycle turbine plants to meet the 75 ppm standard. This analysis was part of a cost model developed in an EPA report (Reference 4-86). The results for each case are explained below.

<u>Standby Units</u>

The first two cases, S-1 and S-2, differ only in the number of hours operated annually. Unit S-1 operates 80 hours and S-2 200 hours per year. These units show the highest percentage impact in terms of the incremental costs per net kWh of power generation. The low number of hours operated each year tends to increase the cost of producing power because fixed costs are spread over a relatively small base. The estimated impact in both cases was roughly 2.4 percent.

TABLE 4-46. IMPACT OF $NO_x$ EMISSION CONTROL ON THE INSTALLED CAPITAL COST OF GAS TURBINES (Reference 4-86, 1975 Costs)

| Application | Installed Cost (1000$) | | % Increase |
|---|---|---|---|
| | Uncontrolled | Controlled | |
| A. Standby | | | |
| 1. 260 kW[a] (350 hp) | 55.6 | 58.0 | 2.4 |
| 2. 820 kW[a] (1100 hp) | 177.9 | 179.3 | 0.8 |
| B. Industrial | | | |
| 1. 3 MW[a] (4000 hp) — typical | 352.8 | 366.8 | 4.0 |
| 2. 3 MW[a] — offshore | 352.8 | 379.8 | 7.1 |
| C. Utility | | | |
| 1. 66 MW[b] | 9900.0 | 10070.0 | 1.7 |

[a]shaft output

[b]electrical output

Table 4-47. WATER INJECTION COSTS, MILLS/kWh (Reference 4-86, 1975 Costs)

| Item | Standby | | | | Industrial | | | Utility | | | | Offshore Drilling Platform |
|---|---|---|---|---|---|---|---|---|---|---|---|---|
| | S-1 | S-2 | S-3 | S-4 | I-1 | I-2 | I-3 | U-1 | U-2 | U-3 | U-4 | |
| Unit Size | 260 kW | 260 kW | 820 kW | 820 kW | 3 MW | 3 MW | 3 MW | 66 MW | 66 MW | 66 MW | 6 MW | 11 GJ/hr |
| Hours of Operation Per Year | 80 | 200 | 80 | 200 | 2000 | 2000 | 3000 | 200 | 500 | 2000 | 8000 | 8000 |
| Annualized Fixed Costs | 13.65 | 5.46 | 4.32 | 1.73 | 0.48 | 0.12 | 0.12 | 2.58 | 1.03 | 0.26 | 0.06 | 0.23 |
| Operating Cost of Water Treatment | 0.46 | 0.46 | 0.37 | 0.37 | 0.10 | 0.10 | 0.10 | 0.11 | 0.11 | 0.11 | 0.11 | 0.35 |
| Water for Injection | 0.01 | 0.01 | 0.01 | 0.01 | 0.01 | 0.01 | 0.01 | 0.01 | 0.01 | 0.01 | 0.01 | – |
| Energy Penalty | 0.51 | 0.51 | 0.51 | 0.51 | 0.43 | 0.43 | 0.43 | 0.34 | 0.34 | 0.34 | 0.34 | 0.43 |
| Water Transport Costs | – | – | – | – | – | – | 0.64 | – | – | – | – | – |
| Output Enhancement | – | – | – | – | – | 0.09 | 0.09 | – | – | – | 0.11 | 0.09 |
| Total | 14.63 | 6.44 | 5.21 | 2.62 | 1.02 | 0.57 | 1.21 | 3.04 | 1.49 | 0.72 | 0.41 | 0.92 |
| Baseline Costs | 611.29 | 264.79 | 611.29 | 264.79 | 43.77 | 32.53 | 35.53 | 180.00 | 85.45 | 38.20 | 26.39 | 32.53 |
| Percent Impact | 2.39 | 2.43 | 0.85 | 0.99 | 2.32 | 1.75 | 3.71 | 1.69 | 1.75 | 1.88 | 1.56 | 2.83 |

[a]Utility turbine size as electrical output, others as shaft output

Cases S-3 and S-4 are 820 kW (1100 hp) units operating the same number of hours, respectively, as the smaller 260 kW units. These units can use exactly the same water purification system as the smaller units. Since the costs of producing power independent of the water injection system (the baseline cost) are identical between cases S-1 and S-3 and S-2 and S-4, the percentage impact of $NO_x$ control is decreased to less than one percent.

Industrial Units

Case I-1 represents a normal, single shaft gas turbine application. The unit is operated 2000 hours per year and is slightly oversized. This negates any benefits that might be derived from improved unit output. For Case I-2, also a baseload turbine, a credit was taken for the improved capacity of the unit.

The highest cost impact was recorded in Case I-3, which represents a remote turbine application in an arid climate in which water must be transported fifty miles at a cost of 2¢ per gallon. The impact in such cases, including water storage facilities, is approximately a 3.7 percent increase in the average cost of generating power. Since water injection results in a slight increase in the power output capacity of the unit, a credit of 0.05 mills per kWh was taken for the output enhancement.

Utility Applications

The first unit operated 200 hours, the second 500 hours, the third 2000 hours, and the fourth 8000 hours annually. A credit for enhanced output was taken in the last case, since the unit is baseloaded. In all four cases, the impact is less than 2 percent.

Offshore Drilling Platform

Initially, it was thought that this case would evidence the highest cost impact. The unit was assumed to use sea water to fuel the water purification system, resulting in a substantial increase in the capital and operating cost of the system. The installed cost of the water treatment equipment was $27,000, compared to $14,000 for an onshore application. Despite these higher costs, the availability of water offset the costs associated with transporting water to the remote gas compressing station application (I-3). The total cost of water injection for the offshore platform was 0.92 mills/kWh compared to 1.21 mills/kWh for the remote site.

In the EPA cost model, no attempt was made to provide detailed estimates of the control costs for regenerative and combined cycle gas turbines. The cost impacts, in absolute terms, are not expected to be much greater than for simple cycles. Indeed, the percentage impacts will be less, given the higher cost per kW of generating capacity of these units.

In summary, the resulting estimates showed that, except for standby units, the total change in costs will probably fall in the range of 0.4 to 1.5 mills per kWh for turbines used in industrial and utility applications. This cost is equivalent to about a 2 percent increase in operating costs. Control costs for standby units were much higher, ranging from 2 to 14 mills per kWh. This is primarily due to their low use factor. This cost is equivalent to approximately a 2.5 percent increase in operating costs.

4.3.2.3 Energy and Environmental Impact

As was the case for reciprocating IC engines, the energy impacts of applying $NO_x$ controls to gas turbines occur almost solely through effects on unit fuel consumption, which were noted in the foregoing discussion. Dry controls, except for reduced air preheat applied to regenerative cycle turbines, have insignificant effects on unit efficiency. On the contrary, wet controls can impose energy penalties. Water injection at the rate of 1 kg $H_2O$/Kg fuel reduces turbine efficiency by about 1 percent. If waste steam is available, steam injection can increase turbine efficiency by increasing turbine power output at constant fuel input. But, if a fuel debit is taken for heat needed to raise injection steam, overall plant efficiency losses comparable to those experienced with water injection will occur.

Again, as with IC engines, gas turbines emit only an exhaust gas effluent stream and fire "clean" fuels. Thus the potential environmental impacts of $NO_x$ controls applied to gas turbines will occur through incremental effects on emissions levels of exhaust gas CO, HC, and particulate (smoke). Effects through liquid and solid effluents need not be considered, and incremental impacts on $SO_x$, trace metal, and, to some extent, higher molecular weight organic emissions are insignificant.

The effects of some commonly applied $NO_x$ control techniques on CO emissions from gas turbines are summarized in Table 4-48. From the table, it is apparent that dry controls, notably leaning the primary zone and air blast (or air-assist atomization) reduce CO levels. This is expected since the additional air introduced into the combustor when applying these techniques allows more complete fuel combustion. On the other hand, wet control techniques, such as water injection, tend to quench combustion and give lower combustor temperatures. This leads to incomplete combustion and increased CO levels as shown in Table 4-48.

The very limited data on incremental hydrocarbon emissions due to $NO_x$ combustion controls applied to stationary gas turbines are summarized in Table 4-49. As the table shows, the effects of dry $NO_x$ controls are mixed. Air blast tends to increase HC emissions while leaning the primary zone tends to decrease HC levels. Increased combustion efficiency due to higher combustion

TABLE 4-48. REPRESENTATIVE EFFECTS OF $NO_x$ CONTROLS ON CO EMISSIONS FROM GAS TURBINES (Reference 4-86).

| $NO_x$ Control | Fuel | CO Emissions (ppm)[a] | |
|---|---|---|---|
| | | Baseline | $NO_x$ Control |
| Lean Primary Zone | Natural Gas | 102 | 51 |
| | Kerosene | 102 | 96 |
| | Diesel | 53 | 99 |
| | | 195 | 59 |
| Air Blast/ Piloted Air Blast | Kerosene | 969 | 110 |
| | Diesel | 53 | 36 |
| Water Injection | Natural Gas | 147 | 1134 |
| | | 252 | 1512 |
| | Diesel | 99 | 144 |
| | | 135 | 162 |
| | | 93 | 30 |

[a]3% $O_2$, dry basis. Emissions levels at full load.

TABLE 4-49. SUMMARY OF THE EFFECTS OF $NO_x$ CONTROLS ON VAPOR PHASE HYDROCARBON EMISSIONS FROM GAS TURBINES (Reference 4-86).

| $NO_x$ Control | Fuel | HC Emissions (ppm)[a] | | Comment |
|---|---|---|---|---|
| | | Baseline | $NO_x$ Control | |
| Air Blast | Jet-A | 18 | 41 | Idle |
| | | 9 | 11 | Full load |
| Lean Primary Zone | Natural Gas | 33 | 9 - 12 | Full load |
| | Diesel Fuel | 30 | 12 | |
| | | 3 | 7 | |
| | Kerosene | 27 | 12 | |
| Water Injection | Natural Gas | 234 | 372 | W/F = 0.5 |
| | | 141 | 246 | |
| | | 36 | 27 | |
| | Diesel Fuel | 24 | 12 | |

[a]3% $O_2$, dry basis.

temperatures tends to support this latter observation. The effects of applying wet controls are also mixed. As indicated in the table, with water injection at a water-to-fuel (W/F) weight ratio of 0.5, HC emissions increased for turbines having high baseline HC emissions, but decreased for turbines which emitted low baseline HC levels.

The data on particulate emissions from gas turbines resulting from applied $NO_x$ controls are also very limited and are as inconclusive regarding the increment in particulate emissions from $NO_x$ controls as those for incremental CO and hydrocarbon emissions. For example, the effect of water injection on particle emissions seems to be related to the specific injection method used (Reference 4-86). Some tests show smoke level reduction of 1.5 to 1.75 smoke sopt numbers when water injection is used. Other tests, however, indicate particulate emissions with water injection at peak load.

## 4.4 SUMMARY

Table 4-50 summarizes current and emerging $NO_x$ control technology for the major source categories (1974 costs). As shown, most of the current $NO_x$ control technologies rely on combustion process modification. Emerging technologies include various combustion modification and flue gas treatment processes. However, combustion process modifications will likely predominate in the U.S. except for situations where very stringent emission levels are required.

Historically, utility boilers have been the most extensively regulated source category, and accordingly, $NO_x$ control technologies for utility boilers are the most advanced. Available combustion modification technology ranges from simple operational adjustments such as low excess air, biased burner firing, and burners out of service to application of overfire air ports, flue gas recirculation, low $NO_x$ burners, and enlarged furnace designs. Some adverse operational impacts have been experienced with the use of combustion modification on existing equipment. In general these have been solved through combustion engineering or by limiting the degree of control application. With factory-installed controls on new equipment, operational problems have been minimal.

The technology for other sources is less well developed. Control techniques shown effective for utility boilers are being demonstrated on existing industrial boilers. Here, as for utility boilers, the emphasis in emerging technology is on development of controls applicable to new unit design. Advanced low $NO_x$ burners and/or advanced off-stoichiometric combustion techniques are the most promising concepts. This holds true for the other source categories as well. The R&D emphasis for gas turbines and reciprocating IC engines is on developing optimized combustion chamber designs matched to the burner or fuel/air delivery system.

TABLE 4-50. SUMMARY OF $NO_x$ CONTROL TECHNOLOGY

| Equipment/ Fuel Category | Current Technology | | | | Emerging Technology | Comments |
|---|---|---|---|---|---|---|
| | Available Control Technique | Achievable $NO_x$ Emission Level ng/J ($lb/10^6$ Btu) | Estimated Differential Capital Cost | Operational Impact | | |
| Existing coal-fired utility boilers | LEA + OSC (OFA, BOOS, BBF); new burners | 215 - 300 (0.5 - 0.7) | $0.7 - 2.2/kW_e 1978$ | Possible increase in corrosion & slagging & carbon in fly ash | Advanced low-$NO_x$ burners; SCR; SNR | Flue gas treatment techniques are potential supplements to combustion modifications if needed |
| New coal-fired utility boilers | LEA + OFA; new burners; enlarged furnace design | 170 - 260 (0.4 - 0.6) | $2 - 3/kW_e 1978$ | No major problems | Advanced low-$NO_x$ burners; advanced furnace designs; SCR; SNR; fluidized bed combustion | Flue gas treatment techniques are potential supplements to combustion modifications if needed |
| Existing oil-fired utility boilers | LEA + OSC + FGR; | 86 - 170 (0.2 - 0.4) | $6/kW_e 1978$ | Possible flame instability; boiler vibration | Low-$NO_x$ burners; oil denitrification; SCR; SNR | No new units; emission levels are limit of current technology |
| Existing gas-fired utility boilers | LEA + OSC + FGR; | 43 - 100 (0.1 - 0.25) | $6/kW_e 1978$ | Possible flame instability; boiler vibration | Low-$NO_x$ burners; SCR; SNR | No new units; emission levels are limit of current technology |
| Oil-fired industrial watertube boilers | LEA + OSC (OFA, BOOS, BBF); FGR; new burners | 85 - 130 (0.2 - 0.3) | $1 - 1.5/kW_t 1978$ | Possible 1% increase in fuel consumption; flame instability; boiler vibration (retrofit) | Low-$NO_x$ burners; OFA in new unit designs, optimized burner/firebox designs; oil denitrification; SCR; SNR | Current technology still undergoing development |
| Stoker-fired industrial water-tube boilers | LEA + OFA | 150 - 190 (0.35 - 0.45) | $1 - 3/kW_t 1978$ | Possible 1% increase in fuel consumption; corrosion; slagging of grate (retrofit) | Inclusion of OFA in new unit design; fluidized bed combustion; SNR | Current technology still undergoing development |
| Gas-fired industrial watertube boilers | LEA + OSC (OFA, BOOS, BBF); FGR; new burners | 86 - 130 (0.2 - 0.3) | $1.5/kW_t 1978$ | Possible 1% increase in fuel consumption; flame instability; boiler vibration (retrofit) | Low-$NO_x$ burners; OFA in new unit design; optimized burner/firebox designs; SNR | Current technology still undergoing development |

TABLE 4-50. SUMMARY OF $NO_x$ CONTROL TECHNOLOGY (Continued)

| Equipment/ Fuel Category | Current Technology | | | | Emerging Technology | Comments |
|---|---|---|---|---|---|---|
| | Available Control Technique | Achievable $NO_x$ Emission Level ng/J (lb/$10^6$ Btu) | Estimated Differential Capital Cost | Operational Impact | | |
| Industrial firetube boilers | LEA + FGR; LEA + OSC | 65 - 110 (0.15 - 0.25) | $6/kW$_t$ 1978$ | Possible 1% increase in fuel consumption; flame instability; (retrofit) | Low-$NO_x$ burners; OFA or FGR in new unit design; optimized burner/ firebox design | Development continuing on current technology |
| Gas turbines | Water, steam injection | 110 - 150 (0.25 - 0.35) | $1 - 2/kW 1975$ | Possible 1% increase in fuel consumption; affects only thermal $NO_x$ | Advanced combustor designs for dry $NO_x$ controls; catalytic combustion; advanced can designs | Current technology widely used |
| IC engines | Fine tuning; changing A/F | 1,070 - 1,290 (2.5 - 3.0) | $0.70 - 2.00/kW ($0.50 - 1.50/BHP) 1975$ | 5 - 10% increase in fuel consumption; misfiring; poor load response | Include moderate control in new unit design; advanced head designs | Technology still being tested |

## REFERENCES FOR SECTION 4


4-1 Maxwell, J.D. and L.R. Humphries, "Evaluation of the Advanced Low-$NO_x$ Burner, Exxon, and Hitachi Zosen $DeNO_x$ Processes," EPA-600/7-81-120, TVA/OP/EDT-81/28, July 1981. p. 5.

4-2 Lim, K.J., et al., "Environmental Assessment of Utility Boiler Combustion Modification $NO_x$ Controls; Volume 1. Technical Results," EPA-600/7-80-075a, April 1980. pp. 4-1 to 4-56.

4-3 Waterland, L.R., et al., "Environmental Assessment of Stationary Source $NO_x$ Control Technologies -- Final Report," EPA-600/7-82-034, May 1982. pp. 133-196.

4-4 Manny, E.H., and P.S. Natanson, "Fireside Corrosion and $NO_x$ Emission Tests on Coal-Fired Utility Boilers," In: Proceedings of the Joint Symposium on Stationary Combustion $NO_x$ Control, Volume I, Utility Boiler $NO_x$ Control by Combustion Modification, IERL - RTP-1083, October 1980 (as cited in Reference 4-3).

4-5 Barsin, J.A., "Pulverized Coal Firing $NO_x$ Control," In: Proceedings Second $NO_x$ Control Technology Seminar, EPRI FP-1109-SR, July 1979 (as cited in Reference 4-3).

4-6 Reference 4-1, 111 pp.

4-7 Ando, J., "$NO_x$ Abatement for Stationary Sources in Japan," EPA-600/7-79-205, August 1979.

4-8 Faucett, H.L., J.D. Maxwell, and T.A. Burnett, "Technical Assessment of $NO_x$ Removal Processes for Utility Application," TVA Bulletin Y-120, EPA-600/7-77-127 (NTIS PB 276 637/6WP), EPRI FP-1253, 1977 (as cited in Reference 4-6).

4-9 Jones, G.D., "Selective Catalytic Reduction and $NO_x$ Control in Japan, A Status Report," EPA-600/7-81-030, January 1981.

4-10 Reference 4-9, p. 10.

4-11 Reference 4-1, p. 9.

4-12 Ando, J., "$SO_2$ and $NO_x$ Removal for Coal-Fired Boilers in Japan," Prepared for the Seventh Symposium on Flue Gas Desulfurization, May 17-20, 1982. p. 5.

4-13 Mobley, J.D. and J.M. Burke, "EPA's Pilot Plant Evaluations of $NO_x$ and $NO_x/SO_x$ Flue Gas Treatment Technology," prepared for the Seventh Symposium on Flue Gas Desulfurization, May 17-20, 1982.

4-14 Reference 4-12, p. 10.

4-15 Reference 4-9, pp. 1-5.

4-16 Johnson, L.W., C.L.W. Overduin, D.A. Fellows, "Status of SCR Retrofit at Southern California Edison Huntington Beach Generating Station Unit 2." In: Proceedings of the Joint Symposium on Stationary Combustion $NO_x$ Control, Volume II Utiliby Boiler $NO_x$ Control by Flue Gas Treatment, IERL-RTP-1084, October 1980. pp. 32, 33.

4-17 Trexler, E.C., "DOE's Electron Beam Irradiation Developmental Program," Prepared for the Seventh Symposium on Flue Gas Desulfurization, May 17-20, 1982. p. 11.

4-18 Reference 4-2, pp. 7-1 to 7-49.

4-19 Reference 4-3, pp. 149 to 154.

4-20 Maxwell, J.D., T.A. Burnett, H.L. Faucett, "Preliminary Economic Analysis of $NO_x$ Flue Gas Treatment Processes," EPA-600/7-80-021, EPRI FP-1253, TVA ECDP B-6, February 1980.

4-21 McGlamery, G.G., et al., "Detailed Cost Estimates for Advanced Effluent Desulfurization Processes," EPA-600/2-75-006, January 1975 (as cited in Reference 4-18).

4-22 Waitzman, D.A., et al., "Evaluation of Fixed-Bed Low-Btu Coal Gasification Systems for Retrofitting Power Plants," EPRI Report 203-1, February 1975 (as cited in Reference 4-18).

4-23 Ponder, W.H., R.D. Stern, and G.G. McGlamery, "$SO_x$ Control Methods Compared," The Oil and Gas Journal, December 1976. pp. 60-66 (as cited in Reference 4-18).

4-24 Engdahl, R.B., "The Status of Flue Gas Desulfurization," ASME Air Pollution Control Division News, April 1977 (as cited in Reference 4-18).

4-25 Princiotta, F.T., "Advances in $SO_x$ Stack Gas Scrubbing," Chemical Engineering Progress, February 1978. pp. 58-64 (as cited in Reference 4-18).

4-26 Campobenedetto, E.J., Babcock & Wilcox Co., Barberton, OH, Letter to K.J. Lim, Acurex Corporation, Mountain View, CA, November 15, 1977 (as cited in Reference 4-19).

4-27 Vatsky, J., "Effectiveness of $NO_x$ Emission Controls on Utility Steam Generators," Foster Wheeler Report to Acurex Corporation, FW Contract 2-43-3245, Livingston, NJ, November 1978 (as cited in Reference 4-19).

4-28 Martin, G.B., "Field Evaluation of Low $NO_x$ Coal Burners on Industrial and Utility Boilers," In: Proceedings of the Third Stationary Source Symposium; Volume I, EPA-600/7-79-050a, February 1979 (as cited in Reference 4-19).

4-29 Johnson, S.A., et al., "The Primary Combustion Furnace System -- An Advanced Low-$NO_x$ Concept for Pulverized Coal Combustion," In: Proceedings: Second $NO_x$ Control Technology Seminar, EPRI FP-1109-SR, July 1979 (as cited in Reference 4-19).

4-30 Teixeira, D., "$NO_x$ Control Technology." EPRI Journal. V3(9):37, November 1978 (as cited in Reference 4-19).

4-31 "Technical and Economic Feasibility of Ammonia-Based Post Combustion $NO_x$ Control", EPRI CS-2713, Electric Power Research Institute, Palo Alto, California, November 1982.

4-32 Reference 4-12, p. 19.

4-33 Reference 4-2, pp. 8-39 to 8-41.

4-34 Reference 4-6, pp. 81-85.

4-35 Reference 4-20, pp. xxv to xxviii.

4-36 Reference 4-13, p. 8.

4-37 Reference 4-17, pp. 5,6.

4-38 Reference 4-3, 448 pp.

4-39 Reference 4-9, pp. 6,7.

4-40 Devitt, T., et al., "The Population and Characteristics of Industrial/Commercial Boilers," EPA-600/7-79-178a, August 1979.

4-41 "Non-fossil-fuel Industrial Boilers, Background Information," EPA-450/3-82-007, Environmental Protection Agency, Research Triangle Park, NC, March 1982.

4-42 Cato, G. A., et al., "Field Testing: Application of Combustion Modification to Control Pollutant Emissions from Industrial Boilers--Phase II," EPA-600/2-76-086a, April 1976.

4-43 Burklin, C. E., and W. D. Kwapil, "Regressions for $NO_x$ Emissions from Oil- and Gas-Fired Industrial Boilers," EPA Contract No. 68-02-3058, Radian Corporation, Durham, NC, May 27, 1982.

4-44 "Fossil Fuel-Fired Industrial Boilers, Background Information, Volume I: Chapters 1-9," EPA-450/3-82-006a, Environmental Protection Agency, Research Triangle Park, NC, March 1982.

4-45 McElroy, M. W., and D. E. Shore, "Guidelines for Industrial Boiler Performance Improvement," EPA-600/8-77-003a, January 1977.

4-46 Hunter, S. C., and H. J. Buening, "Field Testing: Application of Combustion Modifications to Control Pollutant Emissions from Industrial Boilers, Phase I and II, Data Supplement, "EPA 600/2-77-122, June 1977.

4-47 Chicanowica, J. E., et al., "Pollutant Control Technique for Packaged Boilers. Phase I. Hardware Modifications and Alternate Fuels," Ultrasystems Draft Report, EPA Contract No. 68-02-1498, Ultrasystems Corporation, Irvine, CA, November 1976.

4-48 Carter, W. A., et al., "Emissions Reduction on Two Industrial Boilers with Major Combustion Modifications," EPA-600/7-78-099a, June 1978.

4-49 Cato, G. A., et al., "Field Testing: Application of Combustion Modifications to Control Pollutant Emissions from Industrial Boilers--Phase I," EPA-600/2-74-078a, October 1974.

4-50 Lim, K. J., et al., "Environmental Assessment of Utility Boiler Combustion Modification $NO_x$ Controls," EPA Contract No. 68-02-2160, Acurex Corporation, Research Triangle Park, NC, April 1978.

4-51 Palazzolo, M. A., "Air Preheat vs. Economizers," Technical Note, Radian Corporation, Durham, NC, September 2, 1981.

4-52 Mason, H. B., et al., "Preliminary Environmental Assessment of Combustion Modification Techniques: Volume II, Technical Reports," EPA-600/7-77-119b, October 1977.

4-53 Langsjoen, P. L., et al., "Field Tests of Industrial Stoker Coal-Fired Boilers for Emissions Control and Efficiency Improvement--Site K," EPA-600/7-80-138a, May 1980.

4-54 Lim, K. J., C. Castaldini, and H. I. Lips, "Industrial Boiler Combustion Modification $NO_x$ Control: Volume I, Environmental Assessment," EPA-600/7-81-126a, July 1981.

4-55 Burklin, C. E., "Application of Staging Burners to Industrial Boilers," Draft Technical Note, EPA Contract No. 68-02-3058, May 1982.

4-56 American Boiler Manufacturers Association, "Emissions and Efficiency Performances of Industrial Coal Stoker-Fired Boilers, Volume 1," DOE/ET/10386-T1 (Vol.1), Arlington, VA, August 1981.

4-57 "Environmental Assessment of Stationary Source $NO_x$ Control Technologies: Final Report," EPA-600/7-82-034, Environmental Protection Agency, Research Triangle Park, NC, May 1982.

4-58 Maloney, K. L., et al., "Low Sulfur Western Coal Use in Existing Small and Intermediate Size Boilers," EPA-600/7-78-153a, July 1978.

4-59 Gabrielson, J. E., et al., "Field Test of Industrial Stoker Coal-Fired Boilers for Emissions Control and Efficiency Improvement - Site A," EPA-600/7-78-136a, July 1978.

4-60 Keller, L. E., and M. S. Jennings, and W. D. Kwapil, "Regressions for $NO_x$ Emissions from Coal-Fired Spreader Stoker Industrial Boilers," EPA Contract No. 68-02-3058, Radian Corporation, Durham, NC, July 22, 1982.

4-61 Carter, W. A., et al., "Thirty-day Field Tests of Industrial Boilers: Site 1--Coal-Fired Spreader Stoker," EPA-600/7-80-085a, April 1980.

4-62 Carter, W. A. and J. R. Hart, "Thirty-day Field Tests of Industrial Boilers: Site 4 -- Coal-fired Spreader Stoker," EPA-600/7-80-085d, April 1980.

4-63 Carr, R. C., "Effectiveness of Gas Recirculation and Staged Combustion in Reducing $NO_x$ on a 560-MW Coal-Fired Boiler," Electric Power Research Institute, NTIS No. PB-260-282, September 1976.

4-64 Carterm W. A., et al., "Emission Reduction on Two Industrial Boilers with Major Combustion Modifications," EPA-600/7-78-099a, June 1978.

4-65 Exxon Research and Engineering Company, "Exxon Thermal $DeNo_x$ Process," New Jersey, Exxon Technology, April 1978.

4-66 "Exxon Corp. Stationary $NO_x$ Emissions Significantly Reduced at Plant," Air and Water Pollution Report, February 20, 1978.

4-67 Jones, G. D., and K. L. Johnson, "Technology Assessment Report for Industrial Boiler Applications: $NO_x$ Flue Gas Treatment, Final Report," EPA-600/7-79-178g, December 1979.

4-68 Heap, M. P., et al., "Reduction of Nitrogen Oxide Emissions from Field Operating Package Boilers, Phase III," EPA-600/2-77-025, January 1977.

4-69 Schwieger, R., "Industrial Boilers - What's Happening Today," Power, February 1977.

4-70 Schwieger, R., "Industrial Boilers - What's Happening Today, Part II," Power, February 1978.

4-71 Personal communication, K.J. Lim of Acurex Corporation with J. Lindsay, Zurn Industries, San Francisco, CA, August 17, 1978.

4-72 Lim, K. J., et al., "Environmental Assessment of Utility Boiler Combustion Modification $NO_x$ Controls," EPA-600/7-80-075a and b, April 1980.

4-73 Personal communication, K.J. Lim of Acurex Corporation with B. Morton, E. Keeler, Co., Williamsport, PA, August 8, 1978.

4-74 Lyon, R. K., and J. P. Longwell, "Selective, Non-Catalytic Reduction of $NO_x$ by $NH_3$," Proceedings of the $NO_x$ Control Technology Seminar, EPRI SR-39, NTIS-PB 253-661, February 1976.

4-75 Wong-Woo, H., and A. G. Goodley, "Observation of Flue Gas Desulfurization and Denitrification Systems in Japan," California Air Resources Board, SS-78-00K, March 7, 1978.

4-76 Vargo, G. M., Jr., et al., "Applicability of the Thermal $DeNO_x$ Process to Coal-Fired Utility Boilers," EPA-600/7-79-079, March 1979.

4-77 Cato, G. A., et al., "Reference Guideline for Industrial Boiler Manufacturers to Control Pollution with Combustion Modification," EPA-600/8-77-003b, November 1977.

4-78 Koppang, R. R., "A Status Report on the Commercialization and Recent Development History of the TRW Low $NO_x$ Burner," TRW Internal Report, TRW, Inc., Redondo Beach, CA, January 1976.

4-79 McGowin, C.R., "Stationary Internal Combustion Engines in the United States," EPA-R2-73-210, April 1973.

4-80 "Standard Support and Environmental Impact Statement - Stationary Reciprocating Internal Combustion Engines," (Draft Report). Acurex Corp./Aerotherm Division, Mountain View, California, Project 7152, March 1976.

4-81 Aerospace Corporation, "Assessment of the Applicability of Automotive Emission Control Technology to Stationary Engines," EPA-650/2-74-051, July 1974.

4-82 The American Society of Mechanical Engineers (ASME), "Power Costs, 1974 Report on Diesel and Gas Engines," March 1974.

4-83 Calspan Corporation, "Technical Evaluation of Emission Control Approaches and Economics of Emission Reduction Requirements for Vehicles Between 6000 and 14000 Pounds GVW," EPA-460/73-005, November 1973.

4-84 Bascom, R.C., et al., "Design Factors that Affect Diesel Emissions," SAE Paper 710484, July 1971.

4-85 Hills, F.J., et al., "CRC Correlation of Diesel Smokemeter Measurements," SAE Paper 690493, May 1969.

4-86 "Standards Support and Environmental Impact Statement, Volume I: Proposed Standards of Performance for Stationary Gas Turbines," EPA-450/2-77-017a, September 1977.

4-87 Shaw, H., "The Effects of Water, Pressure and Equivalence Ratio on Nitric Oxide Production in Gas Turbines," ASME Paper 73-WA/GT-1.

4-88 Hilt, M.B. and Johnson, R.H., "Nitric Oxide Abatement in Heavy Duty Gas Turbine Combustion by Means of Aerodynamic and Water Injection," ASME Paper 72-GT-53.

4-89 Stern, R.D., "The EPA Development Program for $NO_x$ Flue Gas Treatment," In: Proceedings of the National Conference on Health, Environmental Effects, and Control Technology of Energy Use, EPA-600/7-76-002, February 1976.

# SECTION 5

# OTHER COMBUSTION PROCESSES

Significant amounts of the total fuels burned and $NO_x$ emissions released in the United States are associated with small-scale combustion processes. These include important nonindustrial uses in domestic and commercial heating, hot water supply, a wide variety of incinerators, and open burning of solid wastes. The contribution to ambient $NO_2$ can be significant, particularly in localized, residential areas. Control techniques, costs, and energy and environmental impacts are discussed for those systems where data are available.

## 5.1 SPACE HEATING

Emissions from stationary source fuel combustion in 1980 were present in Section 2. As shown in Table 2-2, commercial and residential combustion sources contributed about 6 percent to the national $NO_x$ emissions. A study of 1977 $NO_x$ emissions showed that 56 percent of the total emissions from residential and commercial combustion sources were from residential space heating systems and 28 percent were from commercial space heating systems (Reference 5-1).

Natural gas and distillate oil are the primary fuels burned in residential heating systems. The combination of gas and oil accounted for 90 percent of the fuel burned for domestic heating in 1976. Gas and oil are also the primary fuels consumed in commercial heating systems. The predominance of gas and oil is also reflected in the distribution of heating equipment types in the residential sector. Electrical heaters accounted for nearly 14 percent of residential heating equipment in 1976; LPG, coal, and wood-fired units accounted for 8 percent; and the remaining equipment was gas- and oil-fired (Reference 5-1).

Residential heating units are characterized by thermostatically controlled heating cycles (on/off cycles). Natural gas-fired residential heating equipment generally employs single port upshot or tubular multiport burners. A standing pilot flame is often used to ignite the burner; however, there is a rapid trend toward interrupted pilots which are turned off in the standby mode. Oil-fired residential heating systems usually use high pressure atomizing gun-type burners. Nearly all new oil-fired systems use the flame retention burner because of its high efficiency. Residential coal-fired furnaces are generally stoker fed and wood-fired heaters are usually hand fed (Reference 5-1).

Commercial heating systems can be divided into three general categories: space heaters, warm air furnaces, and hot water or steam systems. Warm air furnaces may be direct or indirect-fired. Direct-fired heaters use clean gaseous fuels and exhaust combustion products directly into the heated space. Indirect fired heaters vent to the outdoors and are similar to residential warm air furnace designs. Commercial steam and hot water units include watertubes, firetubes, and cast iron boilers. Gas- and oil-fired boilers normally employ single power burner designs. Some atmospheric gas burners are used for small units. Coal-fired steam and hot water units are underfed stoker units (Reference 5-1).

### 5.1.1 Emissions

Hall, et al. (Reference 5-2) studied the factors that affect emission levels from residential heaters. This project, which concentrated on an oil-fired warm air furnace, showed that excess air, residence time, flame retention devices, and maintenance are major factors in the control of emissions.

As shown in Figure 5-1, emissions of CO, HC, smoke, and particulate matter pass through a minimum as excess air is increased from stoichiometric conditions. By contrast, both thermal efficiency and NO emissions pass through maximum points as excess air is increased. The experimental results showed that increased residence time of the combustion products reduces emissions of CO gaseous HC, and smoke but has no effect on $NO_x$ emissions. Combustion chamber material was found to affect all emissions. Furnaces with steel-lined chambers required higher excess air levels to reach optimum emission levels, thus reducing efficiency. The shape of the combustion chamber had little effect on pollutant generation. A specially designed flame retention device designed to decrease particulate emissions was found to increase $NO_x$ emissions, but such a device also increased furnace efficiency. Poorly maintained furnaces also yielded higher $NO_x$ emissions.

In another study of space heating equipment (Reference 5-3), emission levels were found to be dependent upon boiler size, design, burner type, burner age, and operating conditions. The type of fuel used in the combustion equipment for space heating also affects $NO_x$ emissions because of fuel nitrogen conversion (Reference 5-1). Of the fuels typically used for space heating, coal and residual oil contain significant quantities of nitrogen which may be converted to $NO_x$ emissions. Conversion rates for coal range from 20 to 60 percent and conversion rates in residential and commercial heating systems are on the high side of the range (Reference 5-1). Because natural gas and fuel oil are very low in fuel nitrogen, $NO_x$ production from natural gas and distillate oil

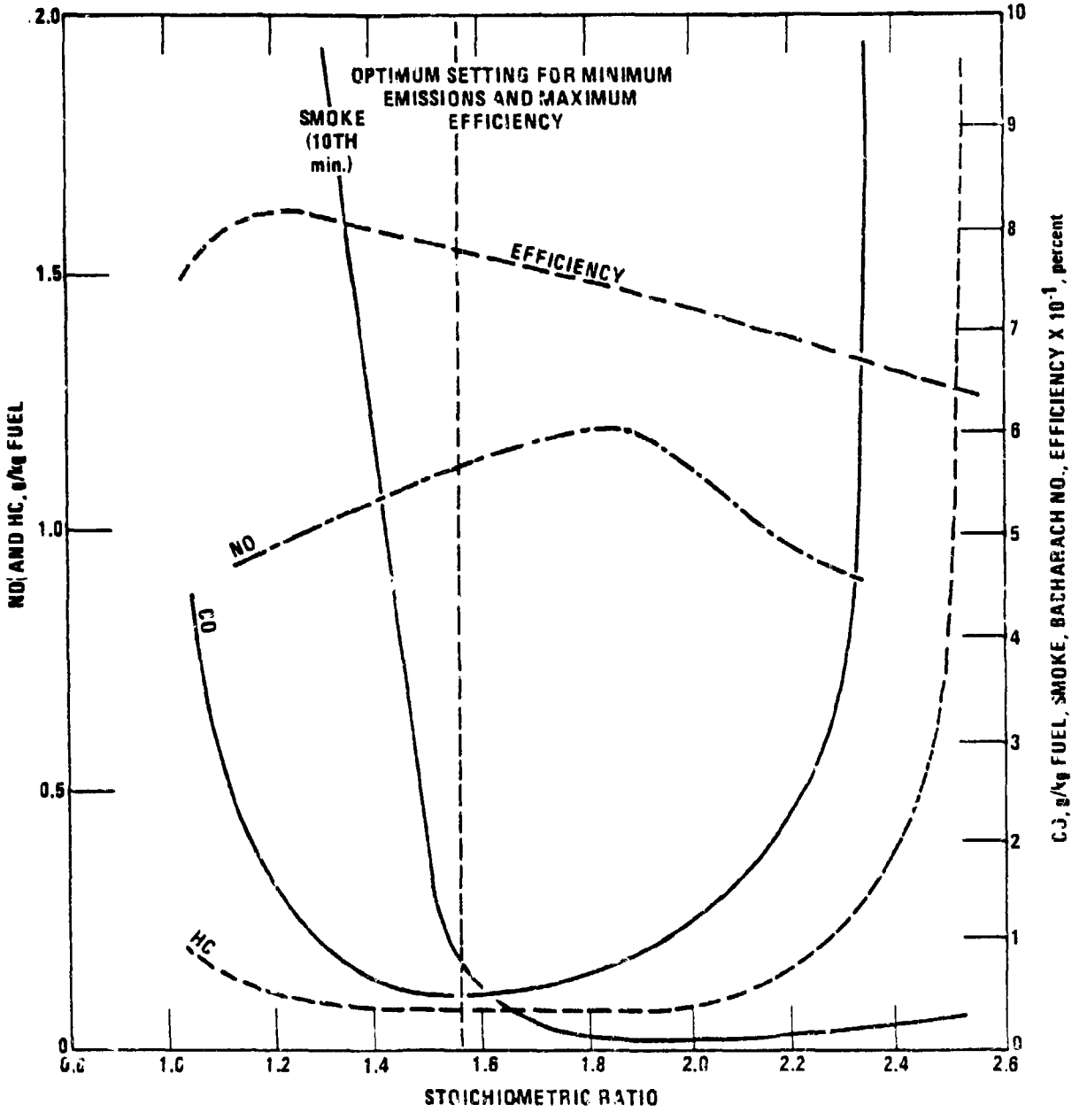


Figure 5-1. General trend of smoke, gaseous emissions, and efficiency versus stoichiometric ratio for residential heaters (Reference 5-4).

systems is due primarily to thermal $NO_x$ which is promoted by high temperatures and long residence times (Reference 5-1).

$NO_x$ emission factors for domestic heating reported in AP-42 (Reference 5-5) are summarized in Table 5-1. Some additional emission rates reported in the literature are summarized in Table 5-2.

Allen (Reference 5-6) found that although $NO_x$ emissions from wood stoves have not been recognized as serious they can be significant. He found that even though the fuel nitrogen content in wood is low, conversion can be significant. He further found that temperatures within wood stoves are not expected to reach the level where atmospheric nitrogen fixation would occur.

### 5.1.2 Control Techniques

Currently available emission reduction techniques for space heating units are: (1) tuning: the best adjustment in terms of the smoke-$CO_2$ relationship that can be achieved by normal cleanup, nozzle replacement, simple scaling and adjustment with the benefit of field instruments, (2) equipment replacement: installation of a new, advanced low-$NO_x$ unit, and installation of a new low-emission burner.

#### 5.1.2.1 Tuning

Reference 5-3 indicates that tuning has a beneficial effect on all pollutants with the exception of $NO_x$. In the field program, oil-fired units considered in "poor" condition were replaced and all others were tuned, resulting in reductions in smoke, CO, HC, and filterable particulate matter by 59, 81, 90, and 24 percent respectively, with no significant change in $NO_x$ levels. Table 5-3 shows mean emission levels prior to and after replacement or tuning. Although tuning or replacement has been shown to have little effect on $NO_x$ levels, yearly inspection accompanied by one of these techniques is highly recommended since other pollutant levels are so greatly reduced.

As an aid to controlling emission levels from residential and commercial space heating systems, EPA has made available guidelines for oil and gas burner adjustments (References 5-7, 5-8, 5-9). These guidelines are intended for the use of skilled technicians and for training service personnel. The recommended adjustment guidelines provide for efficient fuel utilization and minimize air pollution with reliable automatic operation.

TABLE 5-1. EMISSION FACTORS FOR RESIDENTIAL AND COMMERCIAL HEATING SYSTEMS[a]

| FUEL | EMISSION FACTOR |
|---|---|
| Gas | 1280 - 1920 kg/$10^6$ $m^3$<br>(80 - 120 lb/$10^6$ $ft^3$)[b] |
| Distillate Oil | 2.3 kg/$10^3$ liter<br>18 lb/$10^3$ gal) |
| Anthracite | 1.5 - 9 kg/Mg<br>(3 - 18 lb/ton) |
| Bituminous | 3 kg/Mg<br>(6 lb/ton) |
| Lignite | 3 kg/Mg<br>(6 lb/ton) |

[a] AP-42 (Reference 5-5).

[b] Lower value for residential systems. Higher value for commercial systems.

TABLE 5-2. UNCONTROLLED $NO_x$ EMISSIONS FROM RESIDENTIAL SPACE HEATING SYSTEMS

| FUEL | $NO_x$ EMISSION RATE (as $NO_2$) | SOURCE |
|---|---|---|
| Natural gas (blue flame) | 42 ng/J (0.098 lb m/$10^6$ Btu) | (Reference 5-10) |
| Natural gas (yellow flame) | 38 ng/J (0.088 lb m/$10^6$ Btu) | Laboratory tests |
| Natural gas (mostly boilers) | 42 ng/J (0.098 lb m/$10^6$ Btu) | (Reference 5-11) |
| Natural gas (mostly hot air furnaces) | 49 ng/J (0.114 lb m/$10^6$ Btu) | Field tests: measurements of emissions in chimneys of natural gas heated homes. |
| Fuel oil | 61.5 ng/J (0.143 lb/$10^6$ Btu) | (Reference 5-3) |
| | 1.8 g/kg fuel | Field tests |
| Anthracite | 3.9 g/kg fuel | (Reference 5-12) |
| Bituminous | 0.9 g/kg fuel | Composites of many emission rate measurements. |

TABLE 5-3. COMPARISON OF MEAN EMISSIONS FOR CYCLIC RUNS ON RESIDENTIAL OIL-FIRED UNITS (REFERENCE 5-3)

| Units | Condition | Units In Sample | Mean Smoke No. | Mean Emission Factors $kg/m^3$ (lb/1000 gal) | | | |
|---|---|---|---|---|---|---|---|
| | | | | CO | HC | $NO_x$ | Filterable Particulate |
| All Units | As Found | 32 | - | >2.65 (>22.1) | 0.68 (5.7) | 2.32 (19.4) | 0.35 (2.9) |
| | Tuned | 33 | - | >1.96 (>16.4) | 0.36 (3.0) | 2.34 (19.5) | 0.28 (2.3) |
| All units, except those in need of replacement | As Found | 29 | 3.2 | 0.93 (7.8) | 0.09 (0.72) | 2.35 (19.6 | 0.29 (2.4) |
| | Tuned | 30 | 1.3 | 0.52 (4.3) | 0.07 (0.57) | 2.34 (19.5) | 0.26 (2.2) |

5.1.2.2 Equipment Replacement

Control equipment options for controlling $NO_x$ from gas- and oil-fired residential furnaces are listed in Tables 5-4 and 5-5. Each of the tables also shows a conventional unit for purposes of comparison.

Gas-Fired Equipment

The American Gas Association Laboratories developed radiant screens capable of reducing $NO_x$ emissions from 36 to 76 percent with an average reduction of 58 percent. Incandescent radiant screens in a natural gas flame radiate heat to the surroundings and cool the flame. Test results showed that performance was more significant for multiport burners than for single port burners. The screens were also found to increase steady-state furnace efficiency slightly because of increased flame and burner radiation (Reference 5-1). The Gas Appliance Manufacturer Association has reported installation and performance problems with the screens. Some of the potential problems cited were performance sensitivity to screen location, effect on CO emissions, and deterioration due to thermal shock (Reference 5-1).

Secondary air baffles control secondary air flow into the flame front. Decreasing the concentration of excess oxygen at peak temperatures with reductions in secondary air was found to decrease $NO_x$ emissions from 10 to 40 percent (Reference 5-10). However, $NO_x$ reductions without increases in CO emissions were generally limited to about 15 percent (Reference 5-1). The Gas Appliance Manufacturer Association expressed concern over reliability and performance of secondary air baffles. Furthermore, it is not clear that secondary air baffles can be applied to all types of residential furnaces (Reference 5-1).

A surface combustion burner employs surface combustion or premixed natural gas and air on a refractory material. The burner radiates heat to an air-cooled firebox and the combustion zone is maintained below about 1,250 K (1,790°F). $NO_x$ emissions of about 7 ng/J (0.016 lb/$10^6$ Btu) have been reported with a prototype furnace using the surface combustor (Reference 5-13). The surface combustor is similar to some larger commercial systems which employ surface combustors.

Another manufacturer's design incorporates a perforated burner. Natural gas mixes with air through the perforations and combustion occurs at the burner surface. Heat is transferred to a glycol solution in small tubes imbedded in a fin arrangement surrounding the burner. The

TABLE 5-4. PERFORMANCE SUMMARY OF LOW-$NO_x$ CONTROL EQUIPMENT FOR NATURAL GAS-FIRED RESIDENTIAL HEATERS[a]

| CONTROL | AVERAGE OPERATING EXCESS AIR (percent) | CYCLIC POLLUTANT EMISSIONS ng/J HEAT INPUT | | | STEADY STATE EFFICIENCY (percent) | CYCLE EFFICIENCY (percent) | 1978 INSTALLED CONTROL COST | COMMENTS |
|---|---|---|---|---|---|---|---|---|
| | | $NO_x$[b] | CO | UHC[c] | | | | |
| Conventional Units | 40-120 | 28-45 | 8.6-25 | 3.3-33 | 70 | 60-65 | d | Costs include installation. |
| Radiant Screens | 40-120 | 15-18 | 6.4 | NA | 75 | 70 | NA | Emissions of CO and HC can increase significantly if screen is not placed properly or deforms. |
| Secondary Air Baffles | 60-80 | 22 | 14 | NA | NA | NA | NA | Requires careful installation. Suited for single port upshot burners. |
| Surface Combustion Burner | 10 | 7.5 | 5.5-9.6 | NA | NA | NA | $100-$200 | Not commercially available. Still under development. |
| Perforated Burner | NA | 7.7 | 26 | NA | 85 | 80 | $100-$300 over conventional furnace | Commercially available design. Spark ignited thus requires no pilot. |
| Modulating Furnace | NA | 25 | NA | NA | 75 | 70 | $50-$250 over conventional furnace | Furnace is essentially derated. It requires longer operation to deliver a given heat load. |
| Pulse Combustor | NA | 10-20 | NA | NA | 95 | 95 | $300-$600 | Currently being investigated by AGAL. |
| Catalytic Combustor | NA | < 5 | NA | NA | 90 | 85 | $100-$250 | Still at the R&D stage. |

[a] Reference 5-1.

[b] Sum of $NO + NO_2$ reported as $NO_2$.

[c] Unburned hydrocarbons calculated as methane ($CH_4$).

[d] Typical costs of uncontrolled unit $500-$800.
NA = not available.

TABLE 5-5. PERFORMANCE SUMMARY OF LOW-$NO_x$ CONTROL EQUIPMENT FOR DISTILLATE OIL-FIRED RESIDENTIAL HEATERS[a]

| CONTROL | AVERAGE OPERATING EXCESS AIR (percent) | CYCLIC POLLUTANT EMISSIONS ng/J HEAT INPUT | | | | | STEADY STATE EFFICIENCY (percent) | CYCLE EFFICIENCY (percent) | 1978 INSTALLED CONTROL COST | COMMENTS |
|---|---|---|---|---|---|---|---|---|---|---|
| | | $NO_x$[b] | CO | UHC[c] | Smoke Number | Particulate | | | | |
| Conventional Units | 50-85 | 37-85 | 15-30 | 3.0-9.0 | 3.2 | 7.6-30 | 75 | 65-70 | d | Range in $NO_x$ emissions is for residential systems not equipped with flame retention burners. Emissions for other pollutants are averages. |
| Flame Retention Burner Head | 20-40 | 26-88 | 11-22 | 0.2-1.8 | 2.0 | NA | 80-83 also depends on heat exchanger | NA | $52[e] | If a new burner is needed as well as a burner head, the total cost would be $385. |
| Controlled Mixing Burner Head | 10-50 | 34 | 13 | 0.7-1.0 | <1.0 | NA | 80 also depends on heat exchanger | NA | $43[e] | Cost of mass produced burner head only about $1.50. Combustible emissions are relatively low because hot firebox was used. |
| Integrated Furnace System | 20-30 | 19 | 20 | 1.2 | <1.0 | NA | 84 | 74 | $250 over conventional furnace | Uses optimized burner head. For new furnace only. Combustible emissions are higher than with burner head because of quenching in air cooled firebox. |
| "Blue flame" Burner/Furnace System | 20 | 10 | 4.5-7.5 | 1.5-2.5 | zero | NA | 84 | 74 | $100 over conventional furnace | New installation only. Furnace is commercially available. |
| Internal Recirculation | 10-15 | 10-25 | <30 | NA | <1.0 | NA | 85 | NA | NA | Both for retrofit or new installations. Not yet commercially available in U.S. |

[a] Reference 5-1.

[b] Sum of NO and $NO_2$ reported as $NO_2$.

[c] Unburned hydrocarbons calculated as methane.

[d] Typical costs of uncontrolled unit $650-$1,000.

[e] Original costs reported for years other than 1978 were corrected for inflation using Gross National Product (GNP) implicit price inflators (Reference 1-9).
NA -- Not available

glycol solution then transfers the heat to room air. Ignition occurs by means of a spark rather than by means of a standing pilot; therefore, seasonal fuel consumption is reduced compared with pilot ignition furnaces. Reported $NO_x$ emissions averaged 7.7 ng/J (0.018 lb/$10^6$ Btu) (Reference 5-10).

The modulating furnace is commercially available and differs from conventional units in that the firing rate responds to heating load demand instead of cycling on and off. The reported emission rate for this furnace design is 25 ng/J (0.058 lb/$10^6$ Btu). The American Gas Association Laboratories attributes the lower emissions to the fact that the furnace is essentially derated, yielding a cooler flame and thus low $NO_x$ emissions. However, the Gas Appliance Manufacturer Association attributes the decreased emission rate to the single-port inshot burner that was used (Reference 5-10).

Pulse combustion involves combustion in a chamber fitted at one end with flapper valves and at the other end with an open exhaust pipe. Fuel and air entering through the flapper valves are ignited with a spark. The pressure resulting from combustion forces the flapper valves closed and forces the product gases out the exhaust pipe. The valves open again as the exhaust gases leaving the chamber create a negative pressure. Preliminary measurements of $NO_x$ emissions from pulse combustion of natural gas are about 20 ng/J (0.047 lb/$10^6$ Btu) (Reference 5-14). There are no marketed pulse combustion systems in use today.

Catalytic residential combustors, although not available commercially, offer the potential for very low $NO_x$ emissions with good combustion efficiency in residential furnaces. The catalyst promotes combustion at low temperatures so that thermal $NO_x$ formation is significantly reduced. Catalytic combustors require large amounts of combustion air. The use of a condensing residential system in which the latent heat of vaporization is recovered is being considered for minimizing heat losses due to high excess air levels (Reference 5-2).

Oil-Fired Equipment

Essentially all new residential and commercial sized oil-fired furnaces and boilers are equipped with flame retention burners. Flame retention devices are generally desireable for all conventional high pressure atomizing gun burners because they allow for operation at low excess air levels and stay tuned longer. However, laboratory experiments have shown that most flame retention burners increase $NO_x$ emissions (References 5-15, 5-3). In a test of ten commercially available high pressure atomizing oil burners, only one burner was found to reduce $NO_x$ emissions while

also reducing smoke emissions. $NO_x$ emissions were reduced from 37 to 26 ng/J (0.087 to 0.061 lb/$10^6$ Btu) (Reference 5-15).

An advanced residential warm air oil furnace has been developed in an EPA-funded program (References 5-16 and 5-17). The integrated furnace system is said to increase the fuel utilization efficiency by up to 10 percent. In addition, a 65 percent reduction in $NO_x$ emission levels was realized. The advanced oil furnace design consists of an optimized oil burner and firebox combination. The system has completed a 500 hour laboratory performance test. The tests evaluated the effects of combustion air swirl angle, nozzle spray angle, and axial injector placement on $NO_x$ emissions levels for various oil flowrates and overall excess air combinations. The optimum burner was a nonretention gun-type with six swirl vanes set at a 26 degree angle. The firebox design selected was a cylindrical fin-cooled firebox. The optimum burner/firebox combination yielded emissions of 0.6 g NO/kg of fuel (1.2 lb/ton) at 10 percent excess air compared to 2-3 g/kg (4-6 lb/ton) for the baseline commercial burners.

In a study related to the development of the integrated furnace system, a controlled mixing burner head for retrofit application to residential oil heating equipment was developed (Reference 5-16). Laboratory testing indicated that the burner design is feasible for commercialization and can be retrofitted on existing residential space heating equipment. The burners operated successfully with long life potential. Retrofit of the burner into standard oil-fired furnaces would result in an estimated 20 percent decrease in $NO_x$ emissions with an accompanying increase in thermal efficiency of up to 5 percent (Reference 5-17).

Another advanced burner/furnace design consists of a "blue flame" oil burner integrated with the firebox of a warm air furnace package (Reference 5-18). Two sizes are currently available: 0.63 $cm^3$ oil/sec (0.6 gph), and 0.79 $cm^3$ oil/sec (0.75 gph). The efficiency of the burner is reported to be about 84 percent and the $NO_x$ emission level is about 20 ppm. This is a significant improvement over conventional systems for which typical efficiencies are 75-80 percent, and $NO_x$ emissions range from 70 to 90 ppm. In the blue flame system combustion air and gases are recirculated throughout the combustion chamber; the recirculation zone is designed such that blue-flame burnout of CO and organics results. These systems are available as a single unit (burner/furnace combinations) for new installations. Retrofits to existing burners are not practical since the blue flame burner must be matched to the firebox geometry and heat transfer characteristics (Reference 5-19). The blue flame furnace system is the only commercially available low $NO_x$ system in the U.S. (Reference 5-1).

Another oil burner recirculates combustion gases in a manner similar to the blue flame system. However, this burner recirculates combustion gases internally; whereas, the blue flame system uses external gas recirculation and requires an air tight combustion chamber to prevent air leaks. This internal recirculation feature may permit retrofit installation on oil-fired furnaces. Estimates of $NO_x$ emissions from this burner are 10-25 ng/J (0.059 lb/$10^6$ Btu) (Reference 5-2).

Coal and Wood-Fired Equipment

$NO_x$ emission control techniques for residential coal- and wood-fired heaters and boilers have not been widely investigated, primarily because of the declining use of this type of equipment in the past. Also, small coal-fired equipment is not amenable to extensive modification for controlling $NO_x$ emissions. Excess air and overfire air injection in some units are the only feasible control alternatives which have some impact on overall $NO_x$ emissions. However, excess air reduction in residential coal-fired equipment is very limited due to increases in carbonaceous emissions. Overfire air injection, only available with larger commercial stokers, is only moderately effective in reducing $NO_x$ (Reference 5-1).

Commercial Equipment

Application of control technology to commercial heating equipment has been very limited. However, the potential for applying some of the control techniques applied to residential systems exists. Compared to residential gas-fired equipment, a greater percentage of commercial warm air heaters or duct heaters utilize power burners instead of naturally aspirated burners. Power burners generally have more flexibility for excess air control while maintaining low CO and VOC emissions (Reference 5-1). Furthermore, theoretical considerations indicate that the flame quenching and surface combustor concepts of gas-fired residential burners could be implemented for commercial systems. Application of control techniques similar to those for residential oil-burners may also be possible for commercial oil-fired furnaces. The EPA controlled mixing burner head design was found to minimize $NO_x$ emissions from burners with oil flow capacity up to 13 ml/s (12 gph) (Reference 5-1).

Although $NO_x$ control techniques for small firetube boilers have not been widely investigated, the similarity in equipment design between small firetube boilers and larger industrial firetube boilers may allow application of similar combustion modification control techniques. $NO_x$ control

techniques investigated for industrial stoker coal-fired boilers could also be potentially applicable to commercial size stokers (Reference 5-1).

### 5.1.3 Costs

Table 5-6 summarizes estimated cost data for the most effective $NO_x$ control alternatives for residential heating systems. The use of advanced low-$NO_x$ burner-furnace units for new sales appears to be the most attractive option for $NO_x$ control in space heating equipment. The perforated burner is presently considered the best available control technology for gas-fired residential and commercial heaters (Reference 5-1).

The blue flame furnace and the integrated furnace system are options for new oil-fired furnace installations. The blue flame unit has been commercially available since 1974 and has been widely tested in field installations. The integrated furnace system (Reference 5-16) is undergoing field demonstration preparatory to certification and potential commercialization. With proper maintenance, both units offer a $NO_x$ reduction potential of 50 percent or greater compared to conventional units. Fuel savings of 5 percent or more, relative to standard units, are achievable with these units. Use of these low-$NO_x$ units in new houses and for replacement of obsolete conventional units in existing installations would yield a nationwide decrease in residential $NO_x$ emissions which would more than offset the potential emissions increase due to population growth for several decades.

For long term application to $NO_x$ control in new residential units, there is the additional possibility of utilizing the alternate design concept of catalytic combustion. This concept, discussed in Section 3.5, offers the potential for extremely low levels of $NO_x$ (1-10 ppm) when firing natural gas or distillate oils. Catalytic combustion is still in the exploratory stage of development and no reliable cost estimates are available for residential heating systems.

As indicated in Table 5-6, retrofit of the controlled mixing burner head (EPA/Rocketdyne) for existing residential oil-fired furnaces primises to be the most cost-effective approach for achieving lower $NO_x$ emission levels. However, these burners are not currently commercially available (Reference 5-1).

Furnace tuning and, if required, burner head replacement (conventional burner head) are strongly recommended for reduction of carbon monoxide and smoke and for improving unit efficiency. The impact on $NO_x$ is negligible, however. Furnace tuning (cleaning, leak detection, sealing and burner adjustment) costs a minimum of $40 for the average residential unit. Burner head retrofit

TABLE 5-6. COST IMPACT OF $NO_x$ CONTROL ALTERNATIVES[a]

| CONTROL | FUEL | ACHIEVABLE NO LEVEL ng/J USEFUL HEAT | 1978 INCREMENTAL INVESTMENT COST | COST EFFECTIVENESS $/ng/J[b] ($/10^6$ Btu) | PAYBACK PERIOD BASED ON ANNUAL FUEL BILL OF $500 | DEVELOPMENT STATUS |
|---|---|---|---|---|---|---|
| Perforated Burner | Natural Gas | 12 (390 ng/m$^3$ fuel) | $100-$300 over cost of conventional furnace | 1.7 - 5.2 | 1 - 3 years | Commercially available |
| Modulating Furnace | Natural Gas | 36 (920 ng/m$^3$ fuel) | $50-$250 over cost of conventional furnace | 1.4 - 7.0 | 1 - 3.8 years | Commercially available |
| Surface combustion Burner | Natural Gas | 12 (380 ng/m$^3$ gas) | $100-$200 over cost of conventional furnace/ heater | 1.7 - 3.4 | 3.5 - 8.0 | Not commercially available |
| Pulse Combustion Burner[c] | Natural Gas | 21 (603 ng/m$^3$ gas) | $300-$600 over cost of conventional furnace/ heater | 6.1 - 12.2 | 1.7 - 3.5 | Not commercially available |
| Catalytic Combustion Burner[c] | Natural Gas | Estimate 5 (163 ng/m$^3$ gas) | $150-$250 over cost of conventional furnace/ heater | 2.3 - 3.9 | 1.4 - 2.3 | Not commercially available |
| Flame Retention Burner Head[c] | Distillate Oil | 50 (1.8 g/kg fuel) | $52 -- retrofit including installation | 2.6 | Less than 1 year | Commercially available |
| Flame Retention Burner[d] | Distillate Oil | 50 (1.8 k/kg fuel) | $385 -- retrofit of reduced capacity burner | 12.8 | 3.5 years | Commercially available |
| Controlled Mixing Burner Head | Distillate Oil | 45 (1.6 g/kg fuel) | $43 -- retrofit including installation | 1.3 | Less than 1 year | Not commercially available |
| Integrated Furnace System | Distillate Oil | 29 (0.7 g/kg/fuel) | $250 over cost of conventional furnace | 4.2 | 2.5 years | Not commercially available |
| Blue Flame | Distillate Oil | 20 (0.7 g/kg fuel) | $100 over cost of conventional furnace | 1.7 | 1 year | Commercially available |

[a] (Reference 5-1).

[b] Based on uncontrolled NOx emissions of 70 ng/J heat output for natural gas-fired heaters and 80 ng/J heat output for distillate oil-fired heaters. Cost-effectiveness is based on the differential investment cost of the control.

[c] Based on installation of a condensing system where seasonal efficiencies can be as high as 95 percent.

[d] Only one flame retention burner tested lowered NOx emissions.

replacement costs an additional $25 less installation. These control measures are usually cost effective in view of the fuel savings and increased safety derived from the maintenance.

### 5.1.4 Energy and Environmental Impact

#### 5.1.4.1 Energy Impact

Both of the $NO_x$ emission reduction techniques (tuning, equipment) result in improved system efficiencies and, consequently, reduced fuel consumption. The exact amount of improvement varies widely depending on the type of equipment. The most promising method, unit replacement, appears to offer in excess of 5 percent fuel savings. On a national basis, this represents a potential savings of 0.6 percent of annual fuel consumption if all space heating equipment were replaced with new designs.

#### 5.1.4.2 Environmental Impact

The effect of lower excess air on CO, VOC, and particulate emissions was discussed previously and is illustrated in Figure 5-1. By constraining incremental emissions during control development, however, it has been possible to achieve low-$NO_x$ combustion conditions without increasing adverse emissions of other species (Reference 5-17). Table 5-7 shows a comparison of the emissions from typical uncontrolled units and from a prototype unit with an optimized burner/firebox. Incremental emissions were held constant or reduced when using the low-$NO_x$ furnace. Table 5-7 also shows incremental emissions with a commercially available oil emulsifier burner. Again, low-$NO_x$ operation was achieved with no adverse effects on incremental emissions (Reference 5-20).

Over 90 percent of residential and commercial warm air furnaces fire either natural gas or distillate oil. Emissions of sulfates and trace metals from these units are thus of minor concern compared to coal-fired boilers. About 3 percent of U.S. warm air furnaces still fire coal. For these furnaces, sulfates, trace metals and especially POM's could cause severe localized environmental problems. However, except for fuel switching, it is doubtful that $NO_x$ controls will be developed and implemented for these sources, and they will not be considered further here.

An additional factor in evaluating incremental emissions for warm air furnaces is the cyclic nature of operation. Warm air furnaces typically undergo two to five on/off cycles per hour. Studies of emissions without $NO_x$ controls show that the starting and stopping transients have a strong, sometimes dominant, effect on total emissions of CO, HC and particulate matter (smoke)

TABLE 5-7. EFFECT OF LOW-$NO_x$ OPERATION ON INCREMENTAL EMISSIONS AND SYSTEM PERFORMANCE FOR RESIDENTIAL WARM AIR FURNACES

| | Excess Air | Thermal Efficiency (Steady-State) | NO g/kg fuel | CO g/kg fuel | HC g/kg fuel | Smoke Bacharach |
|---|---|---|---|---|---|---|
| Typical uncontrolled field units (References 5-2,5-3) | 90% | 70% | 1.1 - 2.7 | 1.05 | 0.1 | 3.2 |
| Optimum low-$NO_x$ unit (Reference 5-17) | 15% | 80% | 0.6 | 1.0 | 0.1 | 1 |
| Water/distillate oil emulsifier burner: (Reference 5-20) | 32% | 80% | 0.85 | 0.3 | -- | ~1 |

(References 5-2 and 5-3). The effect of $NO_x$ controls on transient emissions has not been widely studied. Incremental steady-state emissions must eventually be weighed against the transient emissions for this significance to be shown.

Comparative data on warm air furnace POM emissions under low-$NO_x$ operation are apparently nonexistent. Data on both transient and steady operation with and without $NO_x$ controls are needed to form a general conclusion on the total incremental impact of $NO_x$ controls. Additionally, it should be emphasized that the incremental emissions data shown in Table 5-7 are for well-maintained laboratory operation. Data are needed on long-term field operation with $NO_x$ controls.

## 5.2 INCINERATION AND OPEN BURNING

### 5.2.1 Municipal and Industrial Incineration

According to a Public Health Service survey conducted in 1968 (Reference 5-21), an average of 2.5 kg (5.5 pounds) of refuse and garbage is collected per capita per day in the United States. An additional 2 kg (4.5 pounds) per capita per day are generated by incineration of industrial wastes, wastes burned in commercial and apartment house incinerators, and backyard burning. The total per capita waste generation rate is conservatively estimated at about 4.5 kg (10 pounds) per day (Reference 5-21).

Incineration is economically advantageous only if land is unavailable for sanitary landfill. Incineration requires a large capital investment, and operating costs are higher than for sanitary landfill.

The most common types of incinerators use a refractory-lined chamber with a grate upon which refuse is burned. Combustion products are formed by contact between underfire air and waste on the grates in the primary chamber. Additional air is admitted above the burning waste to promote burnout of the primary combustion products.

Incinerators are used in a variety of applications. The main ones are municipal and industrial solid waste management. Municipal incinerators consist of multiple chamber units that have capacities ranging from 23 kg (50 pounds) to 1,800 kg (4,000 pounds).

5.2.1.1 Emissions

Nationwide $NO_x$ emissions from incineration in 1974 amounted to 39 Gg per year (43,400 tons per year) which is 0.3 percent of the total $NO_x$ emissions from stationary sources. Fifty-five percent of these emissions result from industrial incineration with the remainder due to municipal incineration. A number of other multimedia effluents from incineration may be of greater concern than $NO_x$. These include metallic compounds in the particulate flyash and hopper ash and chlorinated organic and inorganic gaseous compounds. Incinerator effluent rates are strongly dependent on the composition of the solid waste, the incinerator design and specific operating variables such as excess air and firing rate. The effluent rates can vary considerably from day to day because of variations in refuse composition. An average emission factor for incineration of 1.5 g $NO_2$/ kg refuse (3 lb/ton) was reported by Niessen (Reference 5-22). AP-42 (Reference 5-23) specifies the same value for multichamber industrial and municipal incinerators. For single chamber industrial incinerators, a lower factor of 1 g $NO_2$/ kg refuse (2 lb/ton) is specified.

Stenberg, et al., conducted field tests to study the effects of excess combustion air on $NO_x$ emissions from municipal incinerators (Reference 5-24). The nitrogen oxide emissions ranged from 0.7 g/kg (1.4 lb/ton) to 1.65 g/kg (3.3 lb/ton) of refuse charged for a 45.3 Mg (50 ton) per day batch-feed incinerator and a 227 Mg (250 ton) per day continuous-feed incinerator. As shown in Figure 5-2, $NO_x$ emissions increase with increasing amounts of excess air. The amount of underfire air also has a significant effect on $NO_x$ production and is shown in Figure 5-3.

In general, nitrogen oxide emissions from incineration are not a primary source of air pollution; however, particulate emissions are significant. It is for this reason that incinerator air pollution control equipment is adopted to the removal of particulate matter rather than $NO_x$. Activity in pollution abatement for incinerators to date has focused on particulate control rather than $NO_x$.

5.2.1.2 Control Techniques

The use of waste disposal methods other than combustion may be the most likely means for reducing $NO_x$ emissions, since the methods normally used for control of other emissions from incineration, such as particulate matter, organics, and carbon monoxide, tend to increase emissions of

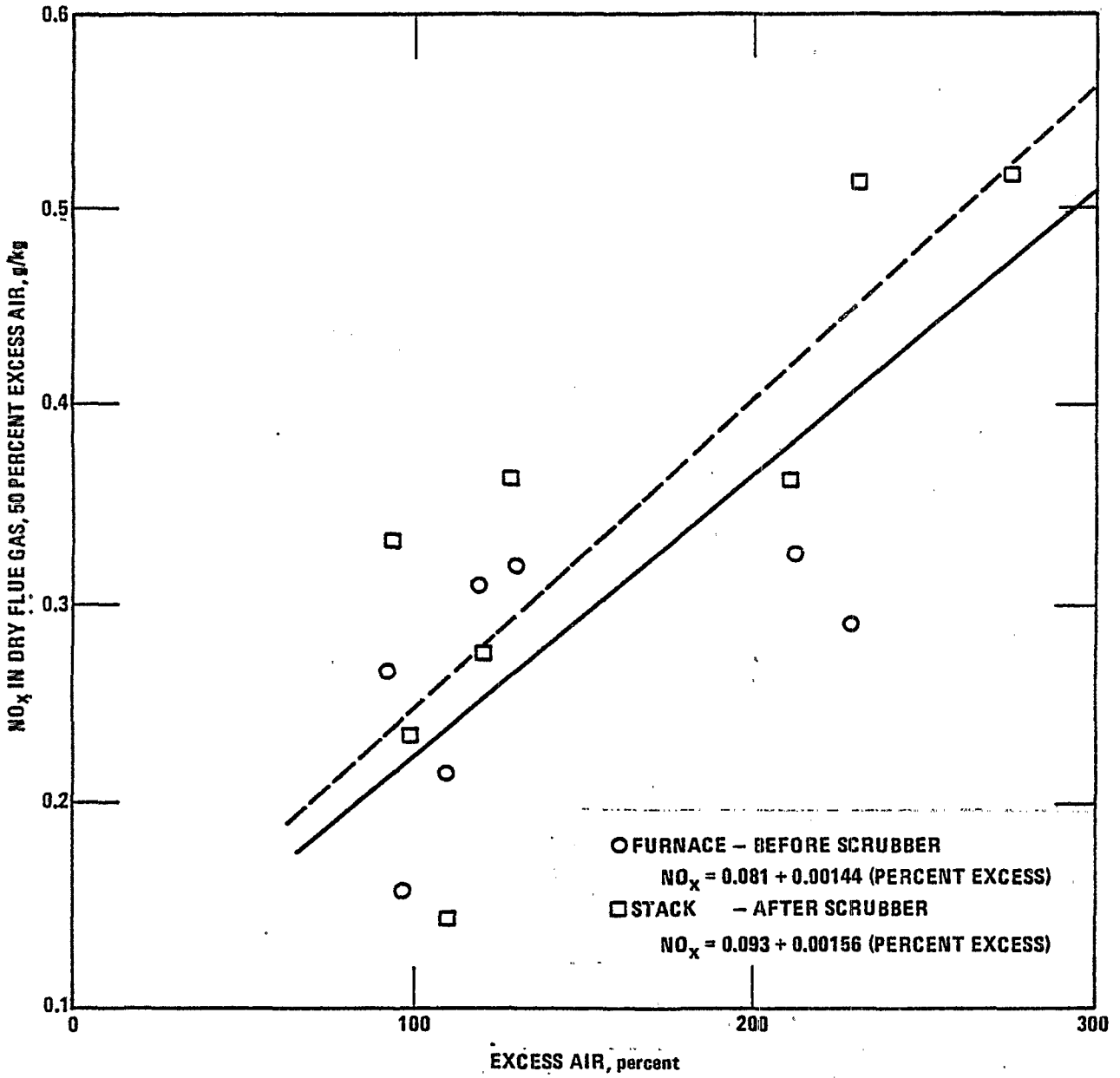


Figure 5-2. Effect of excess air on $NO_x$ emissions from a 45.3 Mg (50 ton) per day batch-feed incinerator (Reference 5-24).

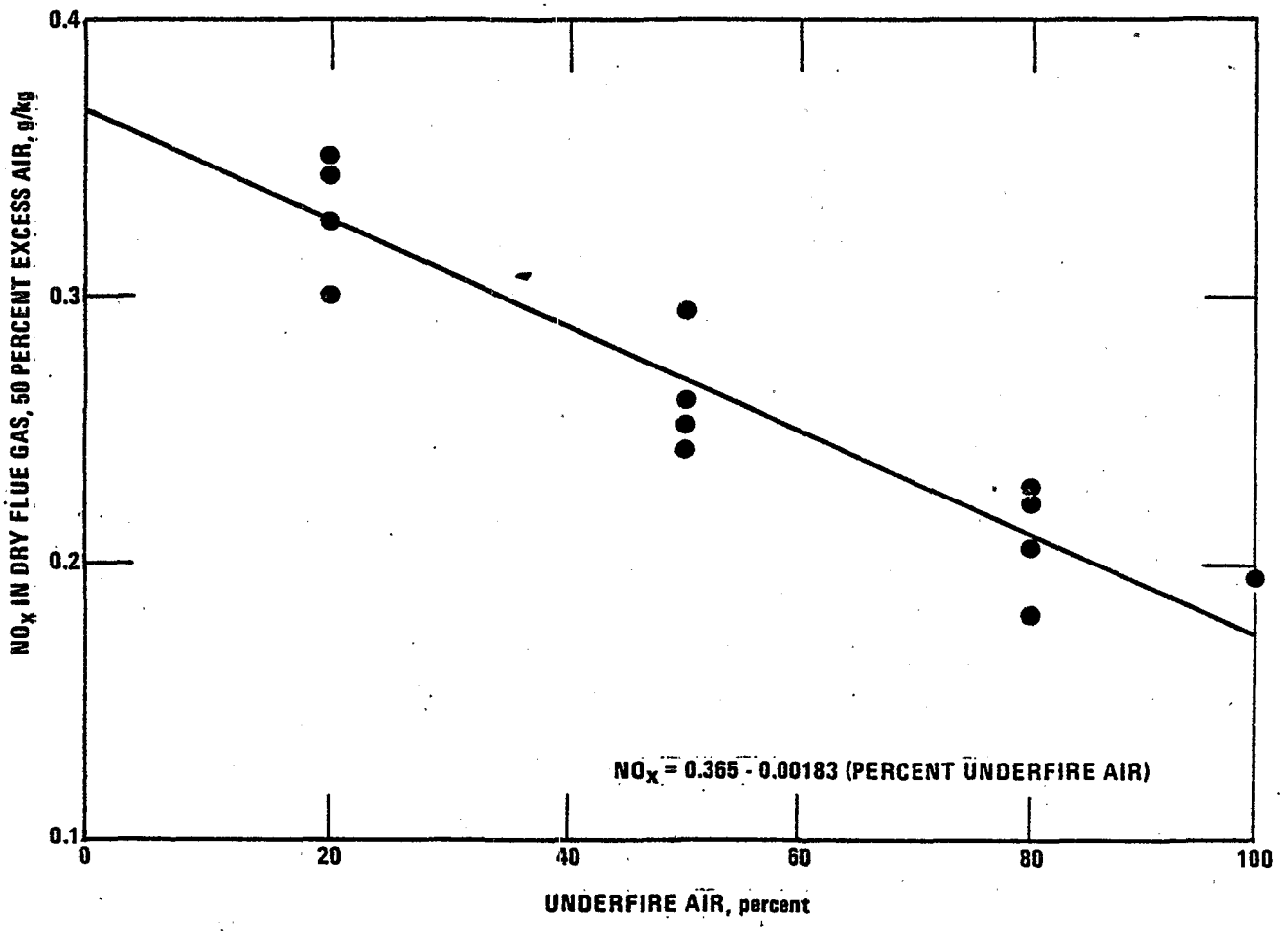


Figure 5-3. Effect of underfire air on $NO_x$ emissions from a 227 Mg (250 ton) per day continuous feed incinerator (Reference 5-24).

$NO_x$. Other disposal methods include dumping, sanitary landfill, composting, burial at sea, disposal in sewers and hog feeding.

One of the first refuse disposal methods used was open dumping of refuse on land. This method is obviously very inexpensive, but extremely objectionable and offensive in and near populated areas.

Sanitary landfills may be alternatives, to the extent that land usable for this purpose is available. Approximately 1233 $m^3$ (1 acre-foot) of land is required per 1000 persons per year of operation for a waste production of 2 kg (4.5 pounds) per day per capita (Reference 5-25). In addition, cover material approximating 20 percent by volume of the compacted waste is required; the availability of cover material may limit the use of sanitary landfill.

5.2.1.3 Costs

At present, gaseous emission controls are not applied to incinerators. As described earlier, only particulate emission controls are employed. Reference 5-26 presents estimated construction costs in 1966 and operating costs for particulate pollution control.

5.2.2 Open Burning

Open burning includes forest wildfires, prescribed burning, coal refuse fires, agricultural burning, and structural fires. Open burning for solid waste management is usually done in large drums or baskets, in large-scale open dumps or pits and on open fields. Commonly, municipal waste, landscape refuse, agricultural field refuse, wood refuse, and bulky industrial refuse are disposed of by open burning.

5.2.2.1 Emissions

Emissions from open burning are affected by many variables including wind, ambient temperature, composition and moisture content of the debris burned, and compactness of the pile. Nitrogen oxides emissions depend mainly upon the nitrogen content of the refuse. Generally, due to the low temperatures associated with open burning, nitrogen oxides emissions are low.

Annual emissions from open burning vary from year to year, and the data for the various sources are not entirely consistent. Table 5-8 shows the estimated $NO_x$ emissions from open burning

sources for 1971 as reported in Reference 5-27. More recent estimates from the 1976 NEDS data file and Reference 5-28 are also given in Table 5-8. Increasing awareness of air pollution problems has contributed to a general decline in the quantity burned (and thus the emissions) from those categories which can be controlled. For example, despite the continuing growth in crop harvest, $NO_x$ emissions from agricultural open burning has declined from an estimated 29 Gg (32,000 tons) in 1969 to 13 Gg (14,300 tons) for 1973 (Reference 5-28).

TABLE 5-8. ANNUAL EMISSIONS OF NITROGEN OXIDES FROM OPEN BURNING

| Source | $NO_x$ Emissions | | | |
|---|---|---|---|---|
| | 1971, Reference 5-27 | | 1976 NEDS | |
| | Gg | $10^3$ Tons | Gg | $10^3$ Tons |
| Solid Waste Disposal | 150 | 165 | 95 | 105 |
| Forest Wildfires | 138 | 152 | 48 | 53 |
| Prescribed Burning | 19 | 21 | 30 | 33 |
| Agricultural Burning | 29 | 32 | 13[a] | 14[a] |
| Coal Refuse Fires | 31 | 34 | 53 | 58 |
| Structural Fires | 6 | 7 | 5 | 6 |

[a]1973 estimate from Reference 5-28.

5.2.2.2 Control Techniques

Solid Waste Disposal

From the standpoint of air pollution, sanitary landfills are alternatives to open burning. In addition to the land necessary for sanitary landfill, cover material approximating 20 percent by volume of the compact waste is required. The availability of cover material may limit the use of the sanitary landfill method.

Unusual local community factors may lead to unique approaches to the landfill site problem. For example, Reference 5-29 reports that in a pilot project the refuse is shredded and baled for loading on rail cars for shipment to abandoned strip mine landfill sites.

Other noncombustion alternatives may have application in some localities. Composting is now being tested on a practical scale (Reference 5-30). Hog feeding has been used for disposal of garbage. Dumping at sea has been practiced by some seacoast cities, but is now extensively regulated.

Elsewhere, refuse has been ground and compressed into bales, which are then wrapped in chicken wire and coated with asphalt. The high-density bales sink to the bottom in the deeper ocean areas and remain intact. The practice of grinding garbage in kitchen units and flushing it down the sewer has been increasing. This in turn increases the load of sewage disposal plants and the amount of sewage sludge (Reference 5-31).

Forest Wildfires

In the United States, forests comprise approximately $3.2 \times 10^{12} m^2$ (786 million acres), or 34.4 percent, of the land area. Seasonal forest fires are quite prevalent in dry western regions. Considerable activity has been and is being directed toward reducing the frequency of occurrence and the severity of these fires. These activities include publishing and advertising information on fire prevention and control, surveillance of forest areas where fires are likely to occur, and various firefighting and control activities. Additionally, prescribed burning is being used to reduce the loading of combustible underbrush and thereby decrease the fire hazard and potential fire spread rate.

The U.S. Forest Service estimated that $2.06 \times 10^{10} m^2$ (5.11 million acres) of land were burned in 1976 (the World Almanac, 1978). A similar estimate for 1971 (Reference 5-27) was $1.73 \times 10^{10} m^2$ (4.28 million acres) burned, producing 138 Gg (152,000 tons) of nitric oxides emissions. Emissions from forest fires are dependent on the local combustion intensity, the overall scale of the fire, and, to some extent, the nitrogen content of the fuel. These in turn are related to the topography of the forest, the composition and dryness of the underbrush, the local meteorological conditions, and the elapsed time since a previous fire. The topography of the forest, the composition and dryness of the underbrush, the elapsed time since a previous fire and the meteorological condition are all interrelated and dictate the burn rate and spread, intensity of the burn, and the size of the burn.

Prescribed Burning

Prescribed burning is the use of controlled fires in forests and on ranges to reduce the possibility of wildfire and for other land management goals. Four classes of open burning operations are traditionally practiced by the Forest Service (Reference 5-32):

- Slash disposal resulting from forest harvesting operations
- Forest management operations for forest floor fuel reduction, seedbed preparation, pest control, forest thinning and undergrowth control
- Public works construction operations to clear reservoir and dam-sites, utility and highway rights-of-way and building and structure site areas

- Public works maintenance operations for the disposal of reservoir driftwood and of rights of way and storm damage debris

In addition, controlled burning is used to reduce unwanted quantities of waste and to improve land utilization.

Because collection and incineration of these materials would tend to increase $NO_x$ emissions, the only current way to control emissions is to avoid combustion. In the future it may be possible to develop incineration processes that can control $NO_x$ and other emissions such as particulate matter, organics, odorous compounds, and carbon monoxide; or it may be possible to develop equipment that can burn these materials as substitutes for fossil fuels.

Other alternatives to incineration are abandonment or burying at the site, transport to and disposal in remote areas, and utilization. Abandonment or burning at the site is practical in cases where no other harmful effects will ensue. Abandoned or buried vegetation can have harmful effects upon plant life by hosting harmful insects or organisms, for example. Agricultural agencies such as the U.S. Department of Agriculture, or state and local agencies should be consulted before these techniques are employed.

Agricultural Burning

Agricultural burning includes the burning of residues of field crops, row crops, and fruit and nut copes for at least one of the following reasons (Reference 5-28):

- Removal and disposal of residue at low cost
- Preparation of farmlands for cultivation
- Clearing to facilitate harvest
- Control of disease, weeds, insects, or rodents

Mitigation of the environmental impact of agricultural open burning is possible by proper fire and fuel management (for example, single-line backfiring), meteorologically scheduled burning to optimize dispersion, or by the substitution of other alternatives, such as mobile incineration, incorporation into the soil, and mechanical removal. Care must be exercised in the choice of alternate methods of disposal since a change in method may have significant adverse effects. For example, *in situ* burning can provide thermal treatment to the soil which raises the production yield substantially, incorporation of the residue into the soil may restrict rapid replanting, and residue decomposition may deplete the soil nitrogen.

Coal Refuse Fires

An estimated 53 Gg (58,000 tons) of $NO_x$ is emitted each year from burning coal refuse. Extinguishing and preventing these fires are the techniques used for eliminating these emissions.

These techniques involve cooling and repiling the refuse, sealing refuse with impervious material, injecting slurries of noncombustibles into the refuse, minimizing the quantity of combustibles in refuse, and preventing ignition of refuse. The $NO_x$ emissions from coal refuse fires are highly dependent on the nitrogen content of the coal.

Structural Fires

There were almost one million buildings attacked by fire during 1971 with losses estimated at $2.21 billion (Reference 5-27). An estimated 6.3 Gg (7,000 tons) of $NO_x$ were emitted during 1971. Prevention is the best control technique to reduce these emissions. Use of fireproof construction, proper handling, storage, and packaging of flammable materials, and publishing and advertising information on fire prevention are some of the techniques used to prevent structural fires.

Fire control techniques include the various methods for promptly extinguishing fires: use of sprinkler, foam, and inert gas systems; provision of adequate firefighting facilities and personnel; provision of adequate alarm systems. Information on these and other techniques for prevention and control are available from agencies such as local fire departments, National Fire Protection Association, National Safety Council, and insurance companies.

## 5.3 INDUSTRIAL PROCESS HEATING

Fossil fuel derived heat for industrial processes is supplied in two ways: (1) by direct contact of the raw process material to flames or combustion products in furnaces or specially-designed vessels, and (2) by heat transfer media (e.g., steam, glycol or hot water) from boilers and I.C. engines. $NO_x$ emissions and control techniques for the latter equipment types have been described in previous sections of this document. The former equipment types are described in the present section. Industries covered include petroleum and natural gas, metallurgical, glass, cement, and coal preparation plants. Much of this section is taken directly from a recent study of industrial process heating performed by the Institute of Gas Technology (Reference 5-33).

There is currently very little application of $NO_x$ control to industrial process heating equipment. Consequently there are very few data on $NO_x$ control costs or energy and environmental impact, and separate sections for these topics will not be included. EPA's Industrial Environmental Research Laboratory (RTP) is sponsoring a field test program to identify the potential for $NO_x$ control in a diversity of process furnaces, ovens, kilns, and heaters. Partial results from that study are given in Reference 5-34 and are discussed, as appropriate, in the following subsections. The complete results of that program (scheduled for 1978) will provide a broad data base on which to evaluate alternate control options.

### 5.3.1 Petroleum, Chemicals, and Natural Gas

Petroleum refining is the process of converting crude oil into salable products. This conversion into salable products is accomplished in various operations which require the feedstock to be at elevated temperatures. Typically, feedstocks are raised to the required temperature in a fired heater. Many chemical manufacturing plants, natural gas plants, and pipeline stations have fired heaters using the same general design principles. Methods used to control $NO_x$ emissions from fired heaters used in these industry groups are similar and therefore will be discussed together. Another source of $NO_x$ emissions at petroleum refineries that will be discussed in this section is catalytic crackers and CO boilers.

#### 5.3.1.1 Fired Heaters

##### 5.3.1.1.1 Process Description

Petroleum Refining and Chemical Manufacturing - Process emissions of nitrogen oxides from the petroleum refining and chemical manufacturing industries are produced primarily by fired heaters. Fired heaters transfer heat, that is liberated by the combustion of fossil fuels, to fluid contained in tubular coils. Industrial processes usually use fired heaters when fluid temperature requirements are above 204°C (400°F). The fluids include any gas or liquid, with the exception of liquid water when it is used for the generation of hot water or steam. Industry also refers to fired heaters as process heaters, process furnaces, and direct fired heaters.

Typical applications of fired heaters include heating of oil or other heat transfer fluid, steam superheating, distillation, thermal cracking, coking, pyrolysis, and reforming. Although there are some applications of fired heaters in other industries, the dominant use is in the petroleum refining and chemical manufacturing industries.

Petroleum refineries (SIC 2911) process crude oil to form products like transportation fuels, heating fuels, lubricating oils, and chemical feedstocks. In 1981, there were 303 refineries operating in the U.S. with a capacity to process $2.93 \times 10^9$ liters/d ($18.45 \times 10^6$ barrels/day) of crude oil (Reference 5-35). These refineries range in size from $6.36 \times 10^4$ liters/day (400 b/d) to $1.02 \times 10^8$ liters/day (640,000 b/d)(Reference 5-35). Forty-one states had at least one refinery. Approximately 56 percent of the industry capacity is located in Texas, California, and Louisiana.

TABLE 5-9. MAJOR REFINERY PROCESSES REQUIRING A FIRED HEATER

| Process | Process Description | Heaters Used | Process Heat[d] Requirements kJ/liter | ($10^3$ Btu/b) feed | Feedstock Temperature[e] Outlet of Heater °C | (°F) |
|---|---|---|---|---|---|---|
| **Distillation** | | | | | | |
| Atmospheric | Separate light hydrocarbons from crude in a distillation column under atmospheric conditions. | Preheater, Reboiler | 511 | (77) | 371 | (700) |
| Vacuum | Separates heavy gas oils from atmospheric distillation bottoms under vacuum. | Preheater, Reboiler | 418 | (63) | 399-443 | (750-830) |
| **Thermal Processes** | | | | | | |
| Thermal Cracking | Thermal decomposition of large molecules into lighter, more valuable products. | Fired Reactor | 4,648 | (700) | 454-538 | (850-1000) |
| Coking | Cracking reactions allowed to go to completion. Lighter products and coke produced. | Preheater | 1,460 | (220) | 482-524 | (900-975) |
| Visbreaking | Mild cracking of residuals to improve their viscosity and produce lighter gas oils. | Fired Reactor | 1,328 | (200) | 454-510 | (850-950) |
| **Catalytic Cracking** | | | | | | |
| Fluidized Catalytic Cracking | Cracking of heavy petroleum products. A catalyst is used to aid the reaction. | Preheater | 385 | (58) | 316-474 | (600-885)[e, f] |
| Catalytic Hydrocracking | Cracking heavy feedstocks to produce lighter products in the presence of hydrogen and a catalyst. | Preheater | 1,262 | (190) | 204-454 | (400-850) |
| **Hydroprocessing** | | | | | | |
| Hydrodesulfurization | Remove contaminating metals, sulfur, and nitrogen from the feedstock. Hydrogen is added and reacted over a catalyst. | Preheater | 465 | (70)[a] | 199-427 | (390-800) |
| Hydrotreating | Less severe than hydrodesulfurization. Removes metals, nitrogen, and sulfur from lighter feedstocks. Hydrogen is added and reacted over a catalyst. | Preheater | 239-498 | (36-75)[e] | 316-427 | (600-800) |
| **Hydroconversion** | | | | | | |
| Alkylation | Combination of two hydrocarbons to produce a higher molecular weight hydrocarbon. Heater used on the fractionator. | Reboiler | 1,992-7,304 | (300-1,100)[e] | ~204 | (~400) |
| Catalytic Reforming | Low octane napthas are converted to high octane, aromatic napthas. Feedstock is contacted with hydrogen over a catalyst. | Preheater | 2,258 | (340) | 454-538 | (850-1000) |

[a]heavy gas oils and middle distillates
[b]light distillate
[c]Btu/barrel of total alkylate
[d]Reference 5-36
[e]Reference 5-39
[f]Reference 5-40

In general, each process in a refinery requires at least one fired heater. All refineries have atmospheric and vacuum distillation units to separate the lighter products from crude oil. The number and type of downstream processes depend on the type of crude processed and the products desired. For example, a complex refinery that takes heavy crude oil and produces unleaded gasoline and lighter oils will require processes such as cracking, hydrotreating, reforming, and alkylation. A refinery of this type can require as many as 100 heaters (Reference 5-36). A small, simple refinery (topping refinery) whose main operation is to separate the crude oil into its major fractions may have 10 heaters. Table 5-9 presents the major refining processes along with a brief description of each process, the types of heaters it requires, and its fired heat and temperature requirements.

The heaters for the refinery processes are usually either preheaters, fired reactors, or reboilers. Hot oil furnaces can be used as preheaters or reboilers. Circulating heaters that heat the heavy crude oils to decrease the viscosity and improve flow through pipes are also used. In refinery fired heaters, the feedstock usually flows through the radiant tube coils only once. The heaters require an even heat distribution to prevent coking within the tubes and to control feedstock temperature.

The total refining industry fired heater energy requirements can be estimated by assuming 75 percent of the total fuel consumed by the refining industry is used by fired heaters (Reference 5-37). For 1979, the fired heater energy requirements are estimated to be 2300 PJ/yr ($2.18 \times 10^{15}$ Btu/yr). This calculated value compares well with other reports which show a range of fired heater energy requirements of 1910 to 2330 PJ/yr ($1.81 - 2.21 \times 10^{15}$ Btu/yr)(Reference 5-37). In a report published by the American Petroleum Institute, the estimated number of fired heaters used in the petroleum refining industry in 1977 was 3240(Reference 5-38).

Chemical Manufacturing Industry - In the chemical manufacturing industry (SIC 28), tubular fired heaters are used to drive endothermic reactions such as natural gas reforming and thermal cracking. They are also used as preheaters to raise the feedstock temperature to a certain temperature to control a reaction and as reboilers in some distillation processes. When a narrow temperature range is required, hot oil furnaces are preferred because they allow better temperature control.

The chemical industry fired heater applications are similar to those used in the refining industry. Fired heaters are used when the feedstock temperature requirements are above 177-204°C (350-400°F). The predominant heater application is as fired reactors.

Ten chemicals have been identified in the chemical manufacturing industry as major users of fired heaters (Reference 5-37). Table 5-10 presents these chemicals along with their manufacturing process, temperature requirements, and the type of heaters they use. Of these ten chemicals, all but one, ammonia, are organic chemicals. In 1980, about 38.5 Gg (85,000 x $10^6$ lbs) of these nine organic chemicals were produced. Seven of these nine chemicals are among the top 50 produced chemicals in the U.S. Also in 1980, 17.3 Gg (38,100 x $10^6$ lbs) of ammonia were produced. Ammonia is the second largest volume chemical in the chemical industry (Reference 5-41). Other smaller volume organic chemicals may use tubular fired heaters. However, the ten chemicals presented represent a large portion of the chemical industry fired heater energy requirements. In addition, all of the basic heater applications expected to be used in the chemical industry are represented by these ten chemicals. Therefore, it is believed that these ten chemicals are representative of the fired heater population for the chemical industry. As in refineries, a major portion of the production capacity is located in Texas and Louisiana.

An estimate of the total chemical industry heater population can be based on process heat requirements. Thirty percent of the total fuels consumed by the chemical industry is required for process heating (Reference 5-37). From this the process heat energy requirements are estimated as approximately 779 PJ/yr (7.38 x $10^{14}$ Btu/yr). However, this estimate of process heat requirements may include other types of process heat besides tubular fired heaters such as dryers, kilns, and roasters. Based on the available data, these other types of process heat account for approximately 14 percent of the total process heat energy requirements (Reference 5-42). Therefore, 86 percent of the total process heat energy requirements is assumed to be met by fired heaters, or 670 PJ/yr (6.35 x $10^{14}$ Btu/yr).

Fired Heater Design - The design of fired heaters can vary depending on the heater application and client preference. Industry uses fired heaters in a variety of applications. Table 5-11 describes the common applications of fired heaters used in the chemical manufacturing and refining industries. The following design classifications distinguish the various heater designs from each other:

TABLE 5-10. TYPICAL FIRED HEATER APPLICATIONS IN THE CHEMICAL INDUSTRY

| Chemical | Process | Heater Type | Feedstock Temperature °C | (°F) | Heat Requirements[a,c] PJ/yr | $10^{12}$ Btu/yr |
|---|---|---|---|---|---|---|
| Ethylene/Propylene[d] | Naptha Cracking | Fired Reactor-Thermal Cracking | 800-900 | (1,472-1,652) | (205.16) | 194.46 |
| Butadiene[d] | Dehydrogenation | Preheater and Reboiler | 425 | (800) | (3.58) | 3.39 |
| Ethanol[f] | Ethylene Hydration | Preheater | 750 | (1,382) | (1.76) | 1.67 |
| Benzene[d] | Extraction of Reformate | Reboiler | 375 | (707) | (47.30) | 44.83 |
| Dimethyl[f] | Formed from p-Xylene and Methanol | Preheater-Hot Oil Furnace | 250-280 | (482-536) | (4.11) | 3.90 |
| Styrene[e] | Dehydrogenation of Ethylbenzene | Fired Reactor-Steam Hydrocarbon Reformer | 630-710 | (1,166-1,310) | (20.93) | 19.84 |
| Ammonia[b,e] | Natural Gas Reforming | Fired Reactor-Steam Hydrocarbon Reformer | 800 | (1,472) | (146.65) | 139.0 |
| Methanol[g] | Hydrocarbon Reforming | Fired Reactor-Steam Hydrocarbon Reformer | 840-900 | (1,544-1,652) | (17.54) | 16.63 |

[a]All 1971 data, except ammonia

[b]1975 data

[c]Reference 5-42

[d]Reference 5-43

[e]Reference 5-44

[f]Reference 5-45

[g]Reference 5-46.

## TABLE 5-11. BASIC FIRED HEATER APPLICATIONS

| Type | Description | Outlet Feedstock Temperature °C (°F) | | Firebox Temperature[c] °C (°F) | | Examples |
|---|---|---|---|---|---|---|
| Reboiler | Heats liquid charge stock from a fractionating column before returning the liquid to the column. | 204-288 | (400-550) | 538-982 | (1000-1800) | Charge stock from atmospheric or vacuum distillation columns in a refinery or a fractionating column in organic chemical manufacturing. |
| Preheater | | | | | | |
| Fractionating-column feed preheater | Heats charge stock before it enters a distillation column. | 371-443 | (700-830)[a] | 871-1,093 | (1600-2000) | Heats feedstock before it enters atmospheric or vacuum distillation columns. |
| Reactor feed preheater | Raises the temperature of the feedstock to control a reaction taking place in an adjacent process. | 538 | (1000)[d] | 871-1,093 | (1600-2000) | Refinery catalytic reforming |
| | | 399 | (750)[b] | | | Ethylene hydration to form ethanol. |
| Circulation Heater | Heats feedstocks to lower their viscosity thus improving pumping and flow through pipes. | < 260 | (<500) | 538-982 | (1000-1800) | Crude oil heating in a refinery to improve flows. |
| | Prevents condensation when gases are transferred. | < 260 | (<500) | 538-982 | (1000-1800) | Natural gas processing plants. |
| Fired Reactor | | | | | | |
| Steam/hydrocarbon reformer heater | Heats the feedstock along with steam to drive an endothermic reaction. The reaction usually takes place over a catalyst. | 788-899 | (1,450-1,650)[d] | 1,093-1,427 | (2000-2600) | Natural gas reforming to yield hydrogen for ammonia synthesis. |
| Pyrolysis heater | Heats the feedstock for thermal decomposition within the heater tubes. | 815-899 | (1,500-1,650)[d] | 1,093-1,427 | (2000-2600) | Thermal cracking in refineries to produce lighter petroleum products and cracking of natural gas liquids and petroleum feedstocks in organic chemical manufacturing to produce olefins. |
| Hot Oil Furnace | Heats a recirculating medium which transfers heat to a feedstock. Used when a narrow temperature range is required. | 177-399 | (350-750)[e] | 538-982 | (1000-1800) | Used as a reboiler in benzene extraction from refinery feedstocks. |

[a]Reference 5-39
[b]Reference 5-46
[c]Reference 5-48
[d]Reference 5-49
[e]Reference 5-50

- Radiant and convective tube coil orientation
- Draft type
- Use of preheated combustion air
- Feedstock temperature
- Fuel types used
- Burner location
- Burner type

Many designs of fired heaters are available. Some examples of the variety of designs available are presented in Figure 5-4. All fired heaters have a radiant section and the majority have a convection section. The radiant section is located within the firebox and contains the burners and a single row of tubular coils. The primary heating of the feedstocks occurs within the radiant section. As the name implies, radiation is the primary method of heat transfer.

The tube coil in the radiant section consists of a number of tubes connected in series by 180 degree return bends (Reference 5-47). Each set of consecutive tubes is considered a "pass" or parallel stream. The inlet feedstock stream can make one pass or can be separated into a number of passes. Tube diameter can vary, but an average diameter is around 10.2 cm (4 inches)(References 5-52, 5-53). The spacing between the tubes and the distance of the tube coil from the refractory walls depends on the tube diameter. Spacing between the tubes usually ranges from 1.5 to 3 diameters (Reference 5-53). Increasing the tube to wall clearance improves heat flux to the tube until the distance reaches about two tube diameters (Reference 5-54). The walls are lined with an insulated material such as insulated firebrick, castable refractory, or ceramic fiber. The insulation protects the steel structure from overheating and flue gas corrosion. In addition, the insulation minimizes heat loss and keeps the firebox at a high temperature by reradiating heat to the tube coils (Reference 5-47).

The convection section is located after the radiant section and also contains a set of tubes. The convection section recovers the residual heat of the flue gas before it goes to the stack. The temperature of the flue gas leaving the radiant section usually ranges from 816- 982°C (1,500-1,800°F)(Reference 5-52). The first few rows of tubes, called shield tubes, are subject to some radiant heat transfer. In most heaters, the feedstock flows through the convection section to preheat it before flowing to the radiant section (Reference 5-52). Some convection sections are also used to generate steam. Convection sections can improve heater efficiency particularly if

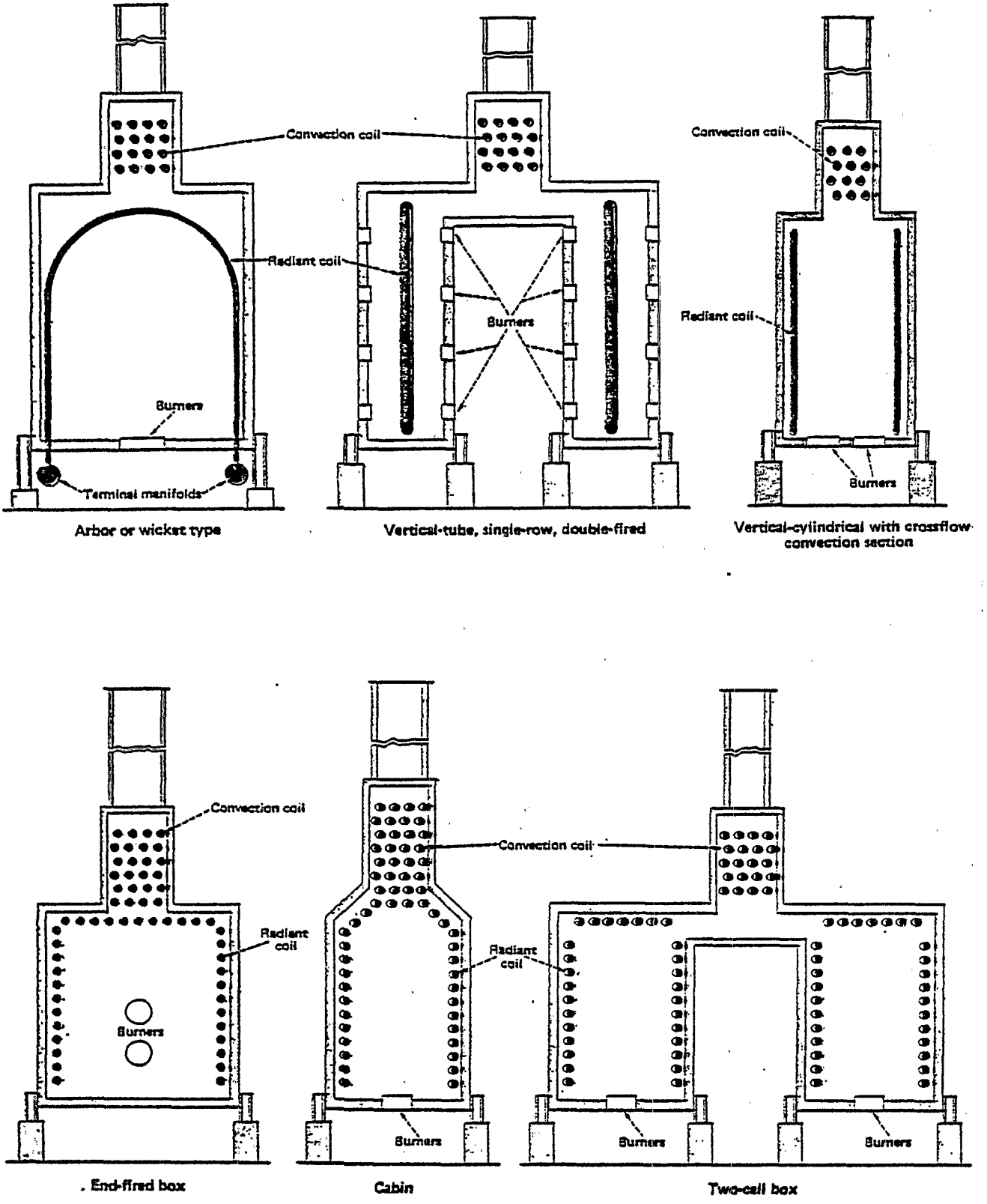


Figure 5-4. Examples of fired heater designs (Reference 5-51).

they have extended surface area. Many older heaters have bare convection section tubes and operate at only 65 to 70 percent efficiency (References 5-37, 5-55). New extended surface tubes can improve efficiency by 10 percent and reduce flue gas temperature by 149°C (300°F). Fins or studs are usually used to extend the tube surface area. Newer heaters can operate at around 90 percent efficiency. The lower limit of exit flue gas temperatures is around 149-177°C (300-350°F) (Reference 5-55). Because many flue gases contain $SO_3$, temperatures below this lower limit will cause corrosion problems due to sulfuric acid condensation. Typical exit temperatures are approximately 371°C (700°F).

Two basic draft types are available to supply combustion air and to remove flue gas. These are natural-draft and mechanical-draft. Approximately 90 percent of all gas-fired heaters and 76 percent of all oil-fired heaters have natural-draft (Reference 5-51). Natural-draft heaters rely on the natural stack effect to remove flue gas and induce the flow of combustion air into the firebox. The natural stack effect maintains a negative pressure within the fired heater. The negative pressure prevents leaking of flue gases and overheating of the heater structure.

In a mechanical-draft heater, a fan supplies the combustion air and removes flue gas. A mechanical-draft heater can use either an induced- draft, forced-draft, or induced-draft/ forced-draft (balanced draft) design. An induced-draft heater uses an induced-draft fan located above the convection section and before the stack to induce the flow of combustion air and remove flue gas. The fan also maintains a negative pressure in the fired heater. A forced-draft heater uses a forced-draft fan to supply combustion air under positive pressure. Although the combustion air is under positive pressure, the firebox still remains under negative pressure. The negative pressure occurs because the flue gas is removed, as in a natural-draft heater, by the stack effect. A balanced draft heater uses a forced-draft fan to supply combustion air and an induced- draft fan to maintain a negative pressure within the heater and remove flue gas.

Typical heaters have a negative pressure of 0.007 - 0.01 kPa (0.03 - 0.05 in $H_2O$)(References 5-52, 5-54). Typical stack flue gas velocities and mass flowrates range from 7.6 to 12.2 m/sec (25-40 ft/sec) and 3.7 to 4.9 kg/s $m^2$ (0.75 -1.0lb/s $ft^2$), respectively (References 5-52, 5-54, 5-56).

Combustion air preheaters are often used to improve the efficiency of a fired heater. The maximum thermal efficiency obtainable with current air preheat equipment is 92 percent

(LHV)(Reference 5-55). In the preheater, heat is transferred from the flue gas to the combustion air. Therefore, less heat is required to heat the combustion air which allows a greater proportion of the total heat released to be absorbed in the radiant section. And less fuel is required to reach the required combustion temperature. In addition, the preheater raises the adiabatic flame temperature above that of ambient air heaters. The trend in the 1980's will be to apply air preheaters to larger sources because of improved fuel efficiency (Reference 5-57). Because of the lower density of the heated combustion air, all heaters using air preheaters will also require a fan.

The temperature requirement of the feedstock is an important factor in heater application and design. Typical feedstock temperature requirements for refinery and chemical manufacturing processes are included in Tables 5-9 and 5-10. Feedstock temperature can influence the number and spacing of tubes and the mass velocity of the feedstock within the tube. The mass velocity of the feedstock determines the tube size and number of passes. Mass velocities usually range from 222 to 1,972 kg/s $m^2$ (45 - 400 lb/s $ft^2$)(Reference 5-52) In addition, heat transfer rate and firebox temperature will be determined by the feedstock temperature requirement. Heat transfer rates range from 85 to 160 MJ/hr $m^2$ (7,500 - 14,000 Btu/hr $ft^2$)(Reference 5-52). Firebox temperatures are included in Table 5-11 and range from 538 to 1427°C (1000-2600°F).

The lowest temperature fired heaters, less than 260°C (500°F) feedstock temperature, are used in natural gas processing plants to prevent condensation. These heaters average only about 4.4 MW (15 x $10^6$ Btu/hr) fuel input and can be as low as 0.15 MW (0.51 x $10^6$ Btu/hr)(Reference 5-38). The lowest temperature heaters in the refining and chemical manufacturing industries are the circulation heaters, while the highest are fired reactors.

Fired heaters can use a variety of fuels. In general, the chemical manufacturing and refining industries use oil or gas. These heaters also burn a wide variety of waste liquids or gases that are not usually considered as fuels. Other fuels such as coal and petroleum coke can be used, but they are not expected to make a significant contribution to the fuels used during the 1980's. Both industries use more off gases and natural gas than oil. However, the refining industry burns more off gases than the chemical industry. Off gases are a by-product from manufacturing processes. They can be made up of a variety of components whose relative composition can vary considerably over time. Heating values of refinery off gases can range from under 100 Btu per cubic foot to over 3000 Btu per cubic foot (Reference 5-58). It is expected that in the future, refineries will use more

refinery off gas and heavier fuels because of the higher market demands for lighter fuels. The chemical industry will probably continue to use primarily natural gas.

The burners in a fired heater can be arranged to fire from the top, bottom, or sides of the heater. Most heaters fire from the bottom or sides because of the design simplicity and efficiency. Some high temperature specialty units such as pyrolysis heaters and steam-hydrocarbon reformer heaters are designed to use many small radiant-wall burners to heat the refractory surface. Other designs of these specialty units include the use of bottom fired burners near the wall to heat the refractory, a combination of bottom fired and radiant-wall burners to heat the refractory, and bottom fired burners midway between the refractory and the process tubes.

Many different types of burners are available for fired heaters. Burners can be differentiated by their flame shape, method of mixing of fuel and air, atomization type, and draft type. The primary objective of a burner is to mix the fuel and oxygen before and during ignition.

The application of the heater and the temperature requirements affect the type of burner selected. For example, some processes will require a more even heat distribution or more intense heat. One of the important operating features of a burner that is considered in the heater design is the flame type. The type of flame will determine heat intensity and heat distribution. Important flame properties are shape and heat flux rate. A burner must be able to maintain a flame-stable operation during a wide range of operating variables and provide a reasonable flame shape when fuel and air input varies (Reference 5-58). Flame shape is affected by the manner in which the fuel and air are introduced. The length of the flame is affected by the type and amount of fuel, combustion air temperature, register draft loss, and excess air rate (Reference 5-59). The flame shape must also comply with the mechanical configuration of the radiant section so that the flame or hot gasses do not impinge on the tubes. It should also provide an even heat distribution. Typical flame shapes are flat and conical. Flat flame burners can produce short, wide flame patterns or longer patterns with less spread. Conical shaped flames can have short flames or extremely long flames. Short flames usually are high intensity while long flames provide a uniform heat flux rate throughout the radiant section. The heat flux rate is usually determined by the process and heater design (Reference 5-58).

Burners can be designed to burn gas, oil, or a combination of gas and oil. Gas-fired burners are simpler in design and operation than oil-fired burners. The basic gas burner classifications

are premix inspirating and raw gas burning. In the premix burner (Figure 5-5a), primary air is mixed with the fuel gas prior to ignition at the burner tip. Induction and mixing of primary air occurs due to the kinetic energy of the fuel gas as it expands through orifices in the burner. Secondary air is usually required to allow for swings in fuel calorific values and to complete combustion. If fuel calorific value is very constant, linearity of excess air levels can be maintained from 33 percent to 100 percent of firing capacity by inspirating all primary air (Reference 5-56). As swings in calorific value of the fuel increase, the use of secondary air must be increased to permit excess air linearity. However, as secondary air use increases, the range of firing rates where excess air levels can be maintained without burner register adjustments decreases. When the firing rate is below the range the burner is capable of maintaining excess air linearity, excess air levels increase significantly as firing rate is decreased. Generally, about 50 to 60 percent of the combustion air is mixed as primary air in the burner. Premix burners require a fuel gas pressure of greater than 170 kPa (10 psig) to maintain combustion air mixing. An advantage of premix burners is that they can operate with high or low excess air rates (Reference 5-47).

Raw gas burners (Figure 5-5b) receive fuel gas without any premixing of combustion air. Mixing occurs in the combustion zone at the burner tip. The tip has a series of small ports to aid mixing. The raw gas burner can handle large turndown ratios for a given combustion condition; however, combustion air adjustments must be made over the full burner operating range (Reference 5-47).

Oil-fired burners (Figure 5-5) are classified by the type of fuel atomization. Oil is atomized to improve the mixing of fuel and combustion air. Atomization methods commonly used are mechanical, air, or steam. Steam atomization is usually preferred because it is more economical, controls the flame better, and can handle larger turndown ratios. Typical steam requirements are 0.07 - 0.16 kg steam/kg of oil (0.07 - 0.16 lb steam/lb of oil). The main requirements for the steam are that it must be dry and available at a constant pressure, approximately 791 kPa (100 psig). As in premix burners, oil-fired burners utilize primary and secondary air to improve heater efficiency (Reference 5-47).

Combination burners (Figure 5-5d) are designed to burn all gas, all oil or any combination of oil and gas. A typical arrangement is to have a single oil gun in the center of an array of raw gas nozzles. The air for oil or gas firing can be controlled separately in these units. Therefore,

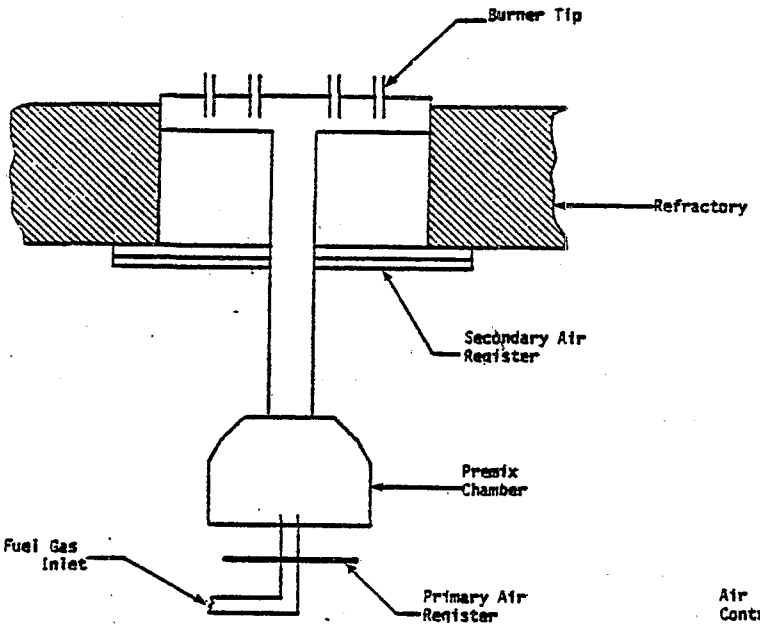


a. Premix Burner

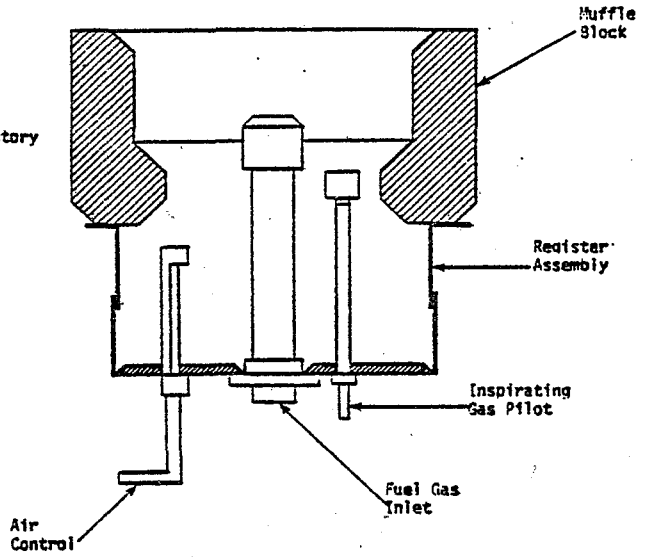


b. Raw Gas Burner

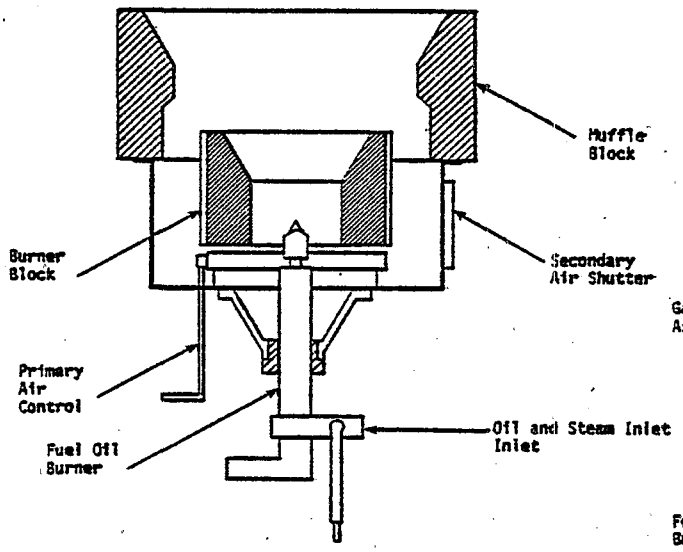


c. Oil Burner

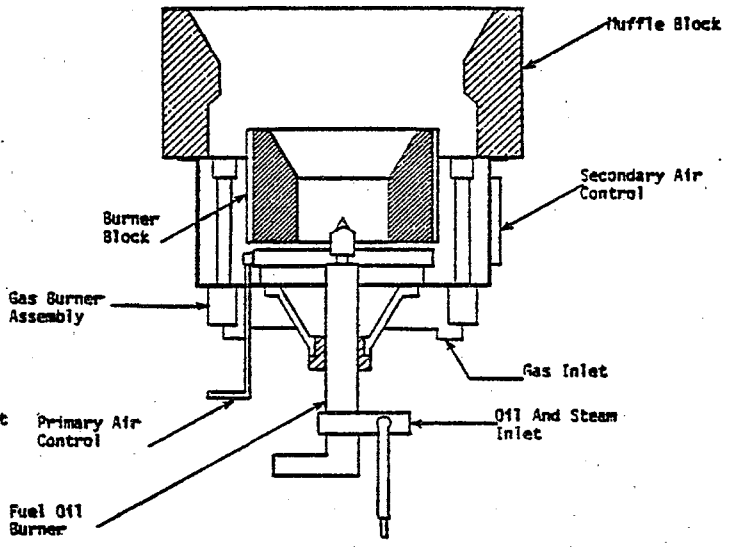


d. Combination Oil and Gas Burner

Figure 5-5. Typical burners by type of fuel burned.

these burners can control primary air for oil combustion and secondary air for fuel-gas combustion (Reference 5-47).

High intensity burners are generally used when a heavy fuel, or when a fuel that has a large quantity of inerts, is to be burned. High intensity burners usually have a large, cyclindrical refractory lined combustion chamber. The mixing of fuel and combustion gases is very intense in this chamber. Combustion is fully established in the chamber but not completed. Because of circulation patterns present in the chamber, flames with stable and controlled size and shape are produced at relatively low excess air. The fuel gases from the high intensity combustion are expelled at a high velocity and temperature. This produces a uniform temperature profile in the firebox. High intensity burners require forced-draft air supplied at relatively high pressures. These air pressures can range from 1.5 to 5 kPa (5-20 in $H_2O$)(Reference 5-47).

The burner type and design are affected by the type of draft. In the past few years the trend has been towards forced-draft burners because they are more fuel efficient. Forced-draft burners can control airflow, therefore, they can be operated at lower excess air, control flame shape better, control fuel/air ratio, and be used with air preheaters (Reference 5-54). They can also cleanly combust fuels with low or varying heat values at low excess air rates. Having the capability to control or use each of these features allows the heater to be operated more efficiently. In addition forced-draft burners have a larger capacity per burner; therefore, less burners are required which reduces cleaning, maintenance costs, and makes them more amenable to automatic control (Reference 5-60).

5.3.1.1.2 Emissions and Control Techniques

Presently there are a wide range of control techniques that have been studied or demonstrated on fired heaters. These techniques include operational changes, combustion modification, flue gas treatment, or a combination of these techniques since they are usually more effective than flue gas treatment alone. Combustion modification techniques have been the most widely used methods to control $NO_x$ emissions. Because an uneven distribution of heat to the process tubes could cause coking of the feedstock, combustion modification techniques have been limited more than in other combustion processes.

Since combustion modifications are the predominant technologies being used their descriptions and capabilities will dominate the following discussion. Prior to discussing the various combustion

modification techniques, emissions from uncontrolled furnaces, and operational control methods and their emissions will be discussed. Flue gas treatment will be discussed last.

Operational Control Techniques - Reducing emissions of $NO_x$ from standard burners used in fired heaters is sometimes possible using methods available to the heater operator. These methods include monitoring stack oxygen and combustibles, and then reducing average excess air levels, reducing the amount of oil combusted, and adjusting burner air registers for minimum $NO_x$ emissions levels. Typically, heater operators adjust the stack damper and burner air registers for a compact, well defined and stable flame. Additionally, the stack damper is adjusted to assure the operator that sufficient combustion air is available during all operating conditions. At these settings the stack oxygen level usually averages 5 to 9 percent. Recently, because of energy conservation programs within some plants, stack oxygen levels are being monitored and controlled to lower levels.

Emissions from a petroleum refinery reformer with 70 premix burners were analyzed using over 2000 hourly measurements (Reference 5-61). Using an autoregression technique, $NO_x$ emissions as a function of stack oxygen level were predicted. Figure 5-6 shows the results and the 95 percent confidence limits of this predictive procedure for firing rates that were typical during the test period. The maximum design firing rate for the heater was 20.7 MW (70 x $10^6$ Btu/hr). The actual operating conditions for this heater was as follows:

| Fuel Firing Rate MW ($10^6$ Btu/hr) | Stack $O_2$ % | $NO_x$ Emissions ng/J (lb/$10^6$ Btu) |
|---|---|---|
| 14.3 (48.9) | 3.15 | 39 (0.09) |
| 3.8 (13) | 0.1 | 0 (0.0) |
| 19.0 (65) | 17.0 | 120 (0.28) |

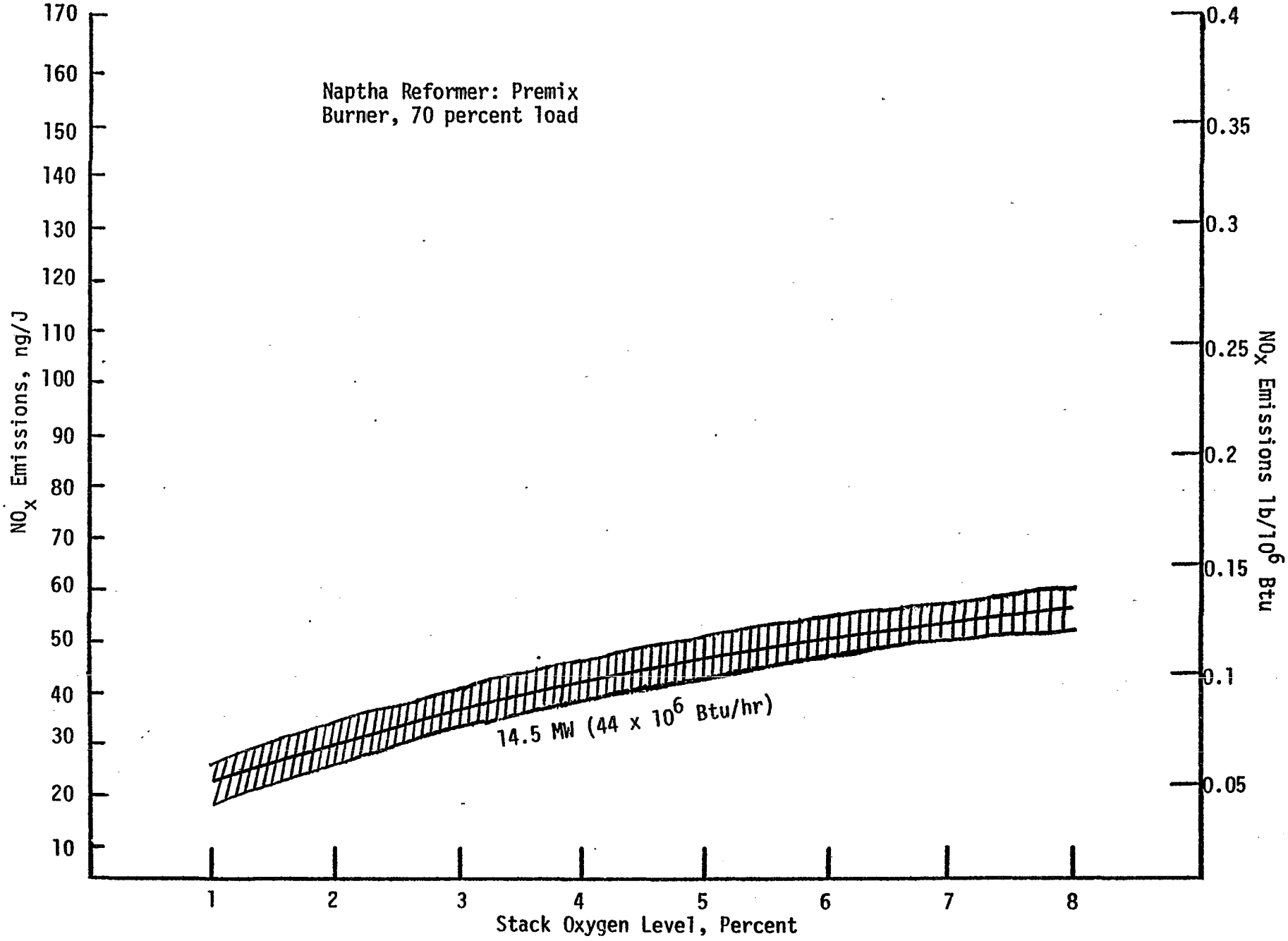


Figure 5-6. $NO_x$ emissions from standard premix burners.

This heater was closely monitored and adjusted to maintain $NO_x$ emissions within permit limits. The $NO_x$ emissions are controlled by manual adjustment of the stack damper to control excess air levels. The plant estimates that $NO_x$ monitoring and control require 4 manhours/day for six heaters. Although it appears that $NO_x$ emissions per unit of heat input can be reduced by about 20 percent by reducing stack oxygen levels from 6 percent to 3 percent, in actuality average $NO_x$ emissions may be reduced less. The reason is that $NO_x$ emissions per unit of heat input tend to maximize at some firebox oxygen level above 6 percent to 8 percent oxygen due to the cooling effect of the air on the flames. By operating for some periods of time above this point of maximum emissions, the average emissions would be reduced from the emissions produced at the average stack oxygen level. It should be noted, however, that because of the increased usage of fuel, the $NO_x$ emissions per unit of time may continue to increase above this stack oxygen level.

Less comprehensive data are available on a standard combination raw gas and oil burner (Reference 5-62). The data were collected on a 108 cubic meter per hour (16,250 barrels per day) natural draft, vertical cylindrical, crude oil heater with six 2.7 MW ($9.2 \times 10^6$ Btu/hr) maximum capacity burners. Although 89 one hour $NO_x$ emission tests were conducted, there were six variables that could be controlled by the operator that may have affected emission levels. These variables included the process rate, heat input rate, fuels combusted, secondary air register setting, steam injection rate and stack oxygen level. Due to the large number of variables, the effect of excess air levels on $NO_x$ emissions could not be quantified with precision. However, a trend can be observed when data are arranged in an order of increasing stack oxygen concentrations in groups where the other variables are similar. Table 5-12 contains selected data from these 89 tests where the other variables were similar and there were at least three different values of stack oxygen level. A definite trend of increasing $NO_x$ emissions with increasing stack oxygen levels is apparent within each of the groups.

Combustion Modification Techniques - As stated previously, combustion modification techniques are the most common and widely used method to control $NO_x$ emissions. Techniques that have been used on burners designated by the vendor as low-$NO_x$ burners include low excess air, high swirl burners; staged addition of combustion air; combustion gas self recirculation; and staged addition of fuel. These techniques are effective on a number of raw gas and dual fuel burner types. Because of design

TABLE 5-12. SUMMARY OF $NO_x$ TEST DATA ON A STANDARD DUAL FUEL BURNER

| Fuel* NG-FG/AG/#6 | Process Rate ($m^3$/hr) | Heat Input (MW) | Secondary Air Register (% open) | Stack $O_2$ (%) | $NO_x$ Emissions ng/J | ($lb/10^6$ Btu) |
|---|---|---|---|---|---|---|
| 100/0/0 | 55 | 7.4 | 50% | 2.3 | 29 | (.068) |
| | | 7.9 | | 4.2 | 44 | (.102) |
| | | 7.9 | | 5.6 | 48 | (.111) |
| | | 8.6 | | 8.7 | 47 | (.110) |
| 100/0/0 | 74.9 | 10.9 | 50% | 0.9 | 32 | (.07) |
| | | 10.8 | | 2.0 | 44 | (.102) |
| | | 11.3 | | 3.9 | 46 | (.107) |
| | | 11.8 | | 5.6 | 52 | (.121) |
| 100/0/0 | 94.1 | 15.4 | 50% | 1.9 | 35 | (.081) |
| | | 15.8 | | 3.3 | 41 | (.096) |
| | | 15.9 | | 4.2 | 41 | (.096) |
| | | 16.3 | | 4.5 | 42 | (.098) |
| 0/100/0 | 76.2 | 11.5 | 50% | 1.3 | 42 | (.100) |
| | | 11.0 | | 1.7 | 47 | (.110) |
| | | 11.1 | | 2.0 | 51 | (.120) |
| | | 11.8 | | 3.6 | 54 | (.130) |
| | | 11.1 | | 3.9 | 56 | (.130) |
| | | 11.8 | | 4.0 | 50 | (.120) |
| | | 11.5 | | 4.1 | 54 | (.130) |
| | | 11.6 | | 4.1 | 56 | (.130) |
| 56/0/44 | 55 | 8.2 | 50% | 1.7 | 75 | (.175) |
| | | | | 2.9 | 88 | (.205) |
| | | | | 4.8 | 90 | (.210) |
| | | | | 6.7 | 63 | (.147) |
| 37/0/63 | 76.2 | 11.4 | 50% | 1.25 | 64 | (.149) |
| | | | | 2.2 | 82 | (.191) |
| | | | | 3.8 | 101 | (.235) |
| 54/0/46 | 94.1 | 14.1 | 50% | 1.9 | 73 | (.170) |
| | | | | 2.6 | 71 | (.165) |
| | | | | 3.4 | 87 | (.203) |
| 63/0/37 | 95.4 | 14.3 | 50% | 1.2 | 64 | (.149) |
| | | | | 1.6 | 73 | (.170) |
| | | | | 2.8 | 79 | (.184) |
| | | | | 2.9 | 85 | (.198) |

*Percentage of natural gas-fuel gas/adsorber gas/number 6 fuel oil.

requirements, premix burners incorporate the intimate mixing of fuel and air and can combine this with combustion air staging and low excess air firing. This may explain why the heater with standard premix burners had significantly lower $NO_x$ emissions than the standard dual fuel burner discussed previously. Therefore, the discussions that follow will be limited to raw gas or liquid fuel burners that incorporate one or more of these technologies.

Low Excess Air, High-Swirl Burners - Burners that depend on low excess air high-swirl conditions to reduce $NO_x$ emissions have been used on a number of petroleum refinery process heaters. Two of these heaters were tested to determine emissions of $NO_x$, CO, and $SO_2$ and to determine the effects of heater operation on emissions (Reference 5-63). The first test was of a four cell, balanced draft refinery gas fired reformer heater with a maximum capacity of 134 $M^3/h$ (20,000 bbl/day) of reformate. Each cell was separated from adjacent cells with a common wall and had four burners mounted in each end wall. The combustion air for all burners was preheated to approximately 544 K (520°F). $NO_x$ emissions for this heater ranged from 27.4 ng/J (0.06 $lb/10^6$ Btu) to 77.4 ng/J (0.18 $lb/10^6$ Btu). $NO_x$ emissions exhibited a strong dependence on excess air levels and a moderate dependence on heat input rate. Figure 5-7 is a presentation of the multiple regression of $NO_x$ emissions as a function of heat input rate and stack oxygen concentrations. For simplicity the five curves were plotted at the average heat input rate five groups of four process conditions of the four cells tested.

The second heater tested was a vertical cylindrical debutanizer bottoms reboiler. A single floor mounted burner was used with ambient temperature combustion air supplied by forced draft. The process rate for the second heater was 187 $M^3/hr$ (28.3 bbls/day) with the burner firing at a heat input rate of 7.62 MW (26.1 x $10^6$ Btu/hr). This was about 95 percent of the process capacity of the heater. Compared to the first heater at near maximum load, $NO_x$ emissions from the second heater were less. Figure 5-8 presents the $NO_x$ emissions during the four tests of the second heater.

Staged Combustion Air Burners - Burners that stage combustion air to reduce $NO_x$ emissions have been the predominant design used in U.S. petroleum refinery heaters. Most of the burners appear similar to standard dual fuel burners except that a third air register exists to provide additional control. Other burner designs incorporate the gas and oil gun within the primary tile case. Air to the primary tile case for initial combustion of the fuel is regulated by a single air register with secondary (staged) combustion air controlled by a second air register and admitted between the primary and secondary tile case. Non-vendor published data are available only on burners of the three air register design.

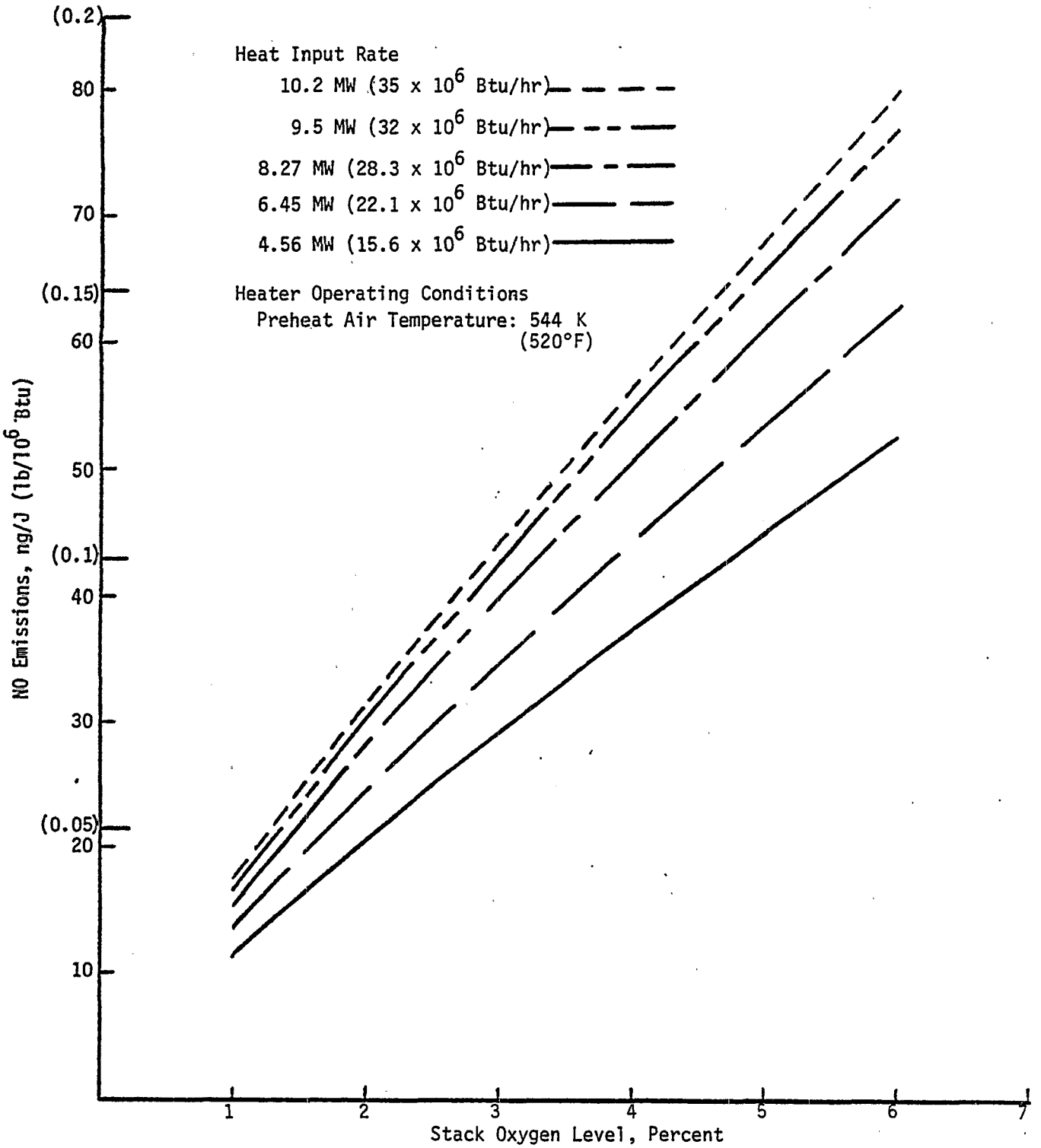


Figure 5-7. $NO_x$ emissions from a refinery gas-fired reforming heater with low excess air burners.

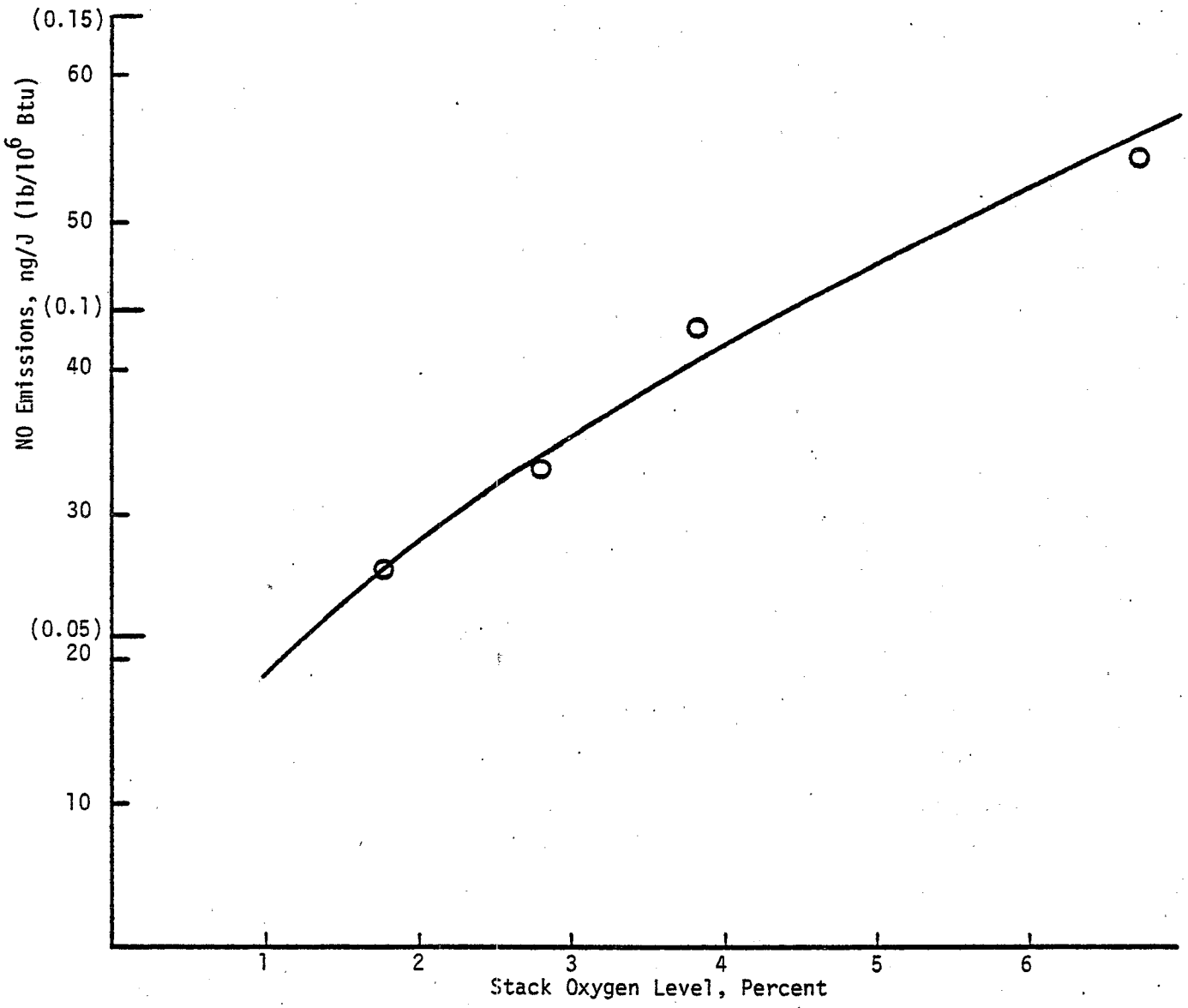


Figure 5-8. $NO_x$ emissions from a single burner, forced draft debutanizer bottoms reboiler.

$NO_x$ emission data for the three air register design burner type firing gaseous fuels include one set of short term emission tests of a forced draft heater and two sets of long term data from a natural draft heater and a balanced draft heater with preheat.

The forced draft heater was a vertical cylindrical heater rated for 92.7 $M^3/h$ (14,000 bbl/day) crude oil throughput (Reference 5-63). Three burners were floor mounted in the heater and fired a combination of natural gas and refinery gas. During the test the process rate varied from 57 percent to 80 percent of rated capacity and the firing rate varied from 3.48 MW (11.9 x $10^6$ Btu/hr) to 4.85 MW (16.5 x $10^6$ Btu/hr). $NO_x$ emissions for this heater were as low as 24 ng/J (.056 lb/$10^6$ Btu) to as high as 44 ng/J (0.10 lb/$10^6$ Btu). Although the air register settings were adjusted to a number of different settings, 13 tests were conducted with air registers set to approximately the same openings that existed prior to the start of the tests. Of the other air register settings evaluated during the test, a setting of primary and tertiary registers 100 percent open and secondary registers closed was designed as optimum for low $NO_x$ operation. Figure 5-9 presents the results of the 13 tests and three tests conducted at the approximate setting designated as optimum. Additionally, the two tests conducted with the air registers set at openings that may be considered as simulating a standard burner are also included. Although not conclusive, it appears that the air register setting could increase or decrease $NO_x$ emissions from 3 to 20 percent from the levels produced with the original register settings. Also it appears that excess air levels have a greater impact on $NO_x$ emissions than either air register settings or load.

The two sets of long term data for gas fired heaters were collected by the plants as a result of local permit requirements (Reference 5-61). The first was a naphtha reformer that consisted of four separate vertical cylindrical heaters with a common convective section. The combined capacity of the four heaters is 25.4 MW (87 x $10^6$ Btu/hr) with four burners in three of the heaters and three burners in the remaining heater. The outlet temperature of the naphtha from the heaters was approximately 770 K (930°F). Over 1000 hourly data points of stack oxygen level, fuel firing rate, and $NO_x$ emissions were collected. The plant monitors oxygen level and adjusts the stack damper for energy conservation considerations. Adjustments are not performed to the burners or stack damper to control $NO_x$ emissions because the plant is well within its permit limits. Fuel firing rate for these heaters averaged 20.9 MW (71.3 x $10^6$ Btu/hr) and ranged from 1.37 to 24.5 MW (4.7 to 83.8 x $10^6$ Btu/hr). Stack oxygen levels averaged 5.5 percent and ranged from 2.7 to 8.4 percent for this same period. The resulting $NO_x$ emissions for these heaters during this period averaged 42.9 ng/J (0.10 lb/$10^6$ Btu) and ranged from 21.5 ng/J (0.05 lb/$10^6$ Btu) to 68.7 ng/J (0.16 lb/$10^6$ Btu).

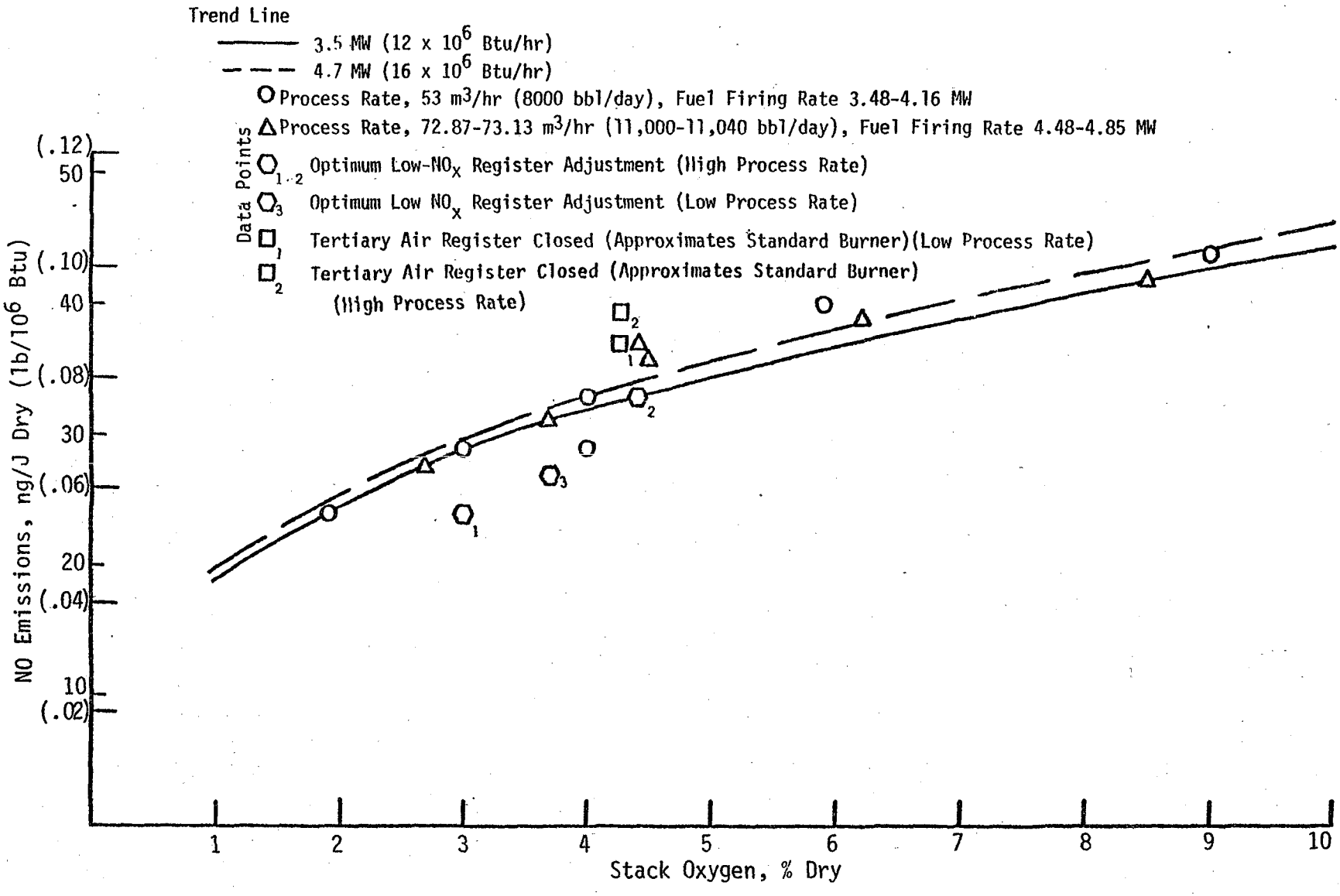


Figure 5-9. Forced draft crude heater with staged combustion burners.

Because there was a significant amount of missing data in the middle of the data, both parts of the data were analyzed to determine the effects of load and stack excess air levels on $NO_x$ emissions. Load effects on the $NO_x$ emissions could not be determined to be of significance with either data set analyzed. However, stack oxygen level did have a significant effect on $NO_x$ emissions. Figure 5-10 shows the predicted average $NO_x$ emissions as a function of stack oxygen and the 95 percent confidence limits for these values. Only the data set with the highest predicted $NO_x$ emission rate is shown. The other data set predicted approximately 20 percent less $NO_x$ emissions.

The second set of data collected was on a balanced draft vertical cylindrical crude heater that used preheated combustion air (Reference 5-61). The heater was retrofitted with nine staged air burners with a total heat input rating of 25 MW (86.3 x $10^6$ Btu/hr). The preheat temperature was between 485 K (414°F) and 500 K (550°F). Almost 3,000 hourly data points of stack oxygen level, fuel firing rate, and $NO_x$ emissions were collected. The plant monitors and controls $NO_x$ emissions because of local permit limits. Adjustments to $NO_x$ emissions are accomplished by adjusting the stack damper to control excess air levels. Burner registers are adjusted to control flame impingement on the process tubes. Fuel firing rate for this heater averaged 16.4 MW (56 x $10^6$ Btu/hr) and ranged from 2 to 20.3 MW (6.9 to 69.3 x $10^6$ Btu/hr). Stack oxygen levels averaged 2.11 percent and ranged from 0.1 to 19.0 percent. $NO_x$ emissions ranged from 3.4 ng/J (.008 lb/$10^6$ Btu) to 68.8 ng/J (0.16 lb/$10^6$ Btu) and averaged 34.4 ng/J (0.08 lb/$10^6$ Btu).

The data were analyzed statistically to determine the effects of load and stack excess air levels on $NO_x$ emissions. Increases in both load and stack excess air levels increased emissions of $NO_x$. Figure 5-11 shows the predicted $NO_x$ emissions as a function of stack oxygen level for two different loads. The 95 percent confidence limits for these values are also indicated.

Limited $NO_x$ emission data from staged combustion air burners firing 100 percent liquid fuels are available. As a result of a study to determine emission levels from process heaters with staged combustion air burners three emission tests were conducted (Reference 5-63). The first test was on a natural draft vertical cylindrical crude heater which fired a 0.15 percent nitrogen distillate oil. A single burner of 4.4 MW (15 x $10^6$ Btu/hr) maximum rated firing capacity was installed in the floor of the heater. Actual firing rate varied from about 4.03 MW (13.8 x $10^6$ Btu/hr) to 4.49 MW (15.3 x $10^6$ Btu/hr). Stack oxygen levels varied every few seconds resulting in a variation of from 5 to 8 percent $O_2$ in the "as found" condition. This variation was attributed to the low overall pressure drop of the heater (which did not have a convective section) and local variation in wind

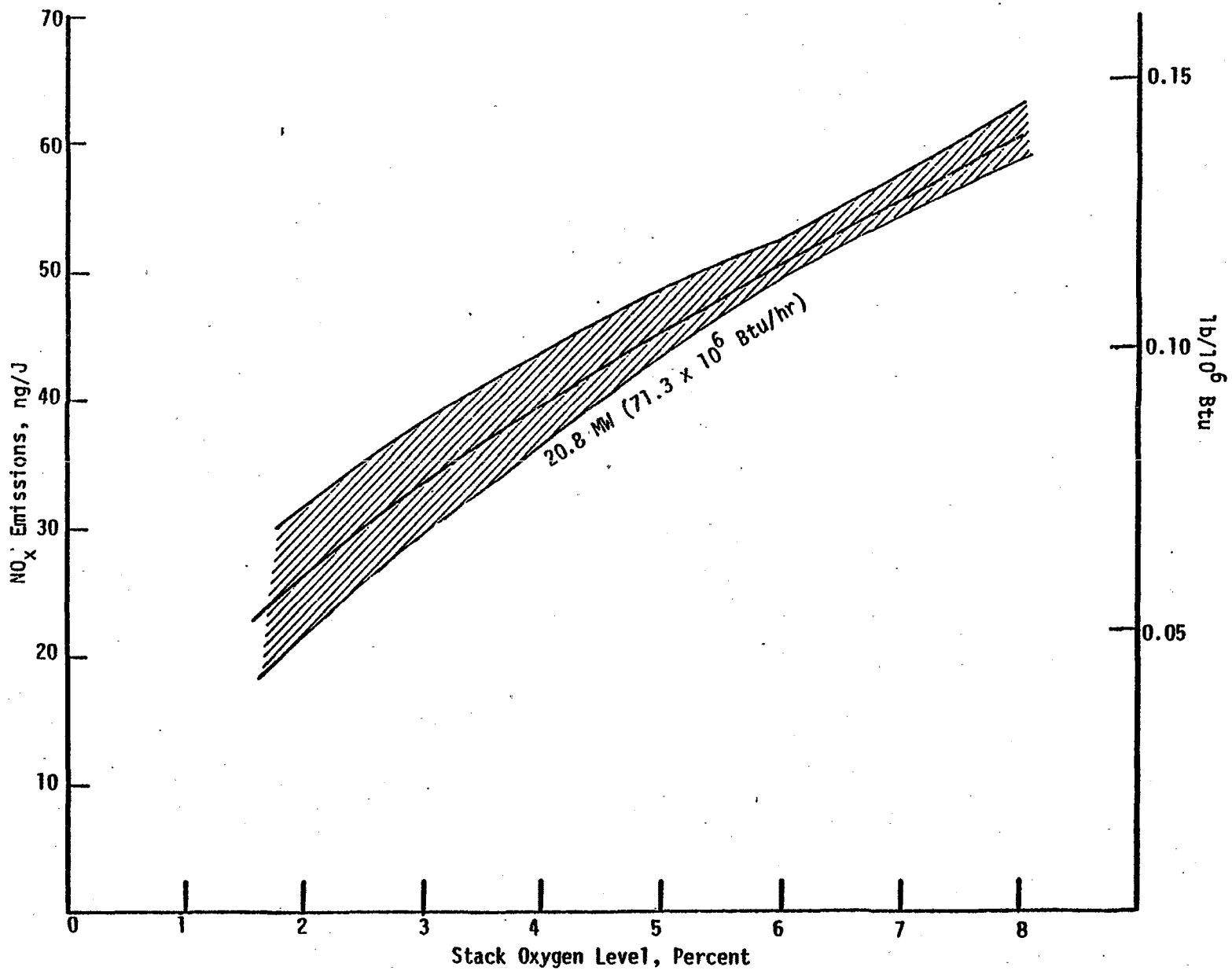


Figure 5-10. $NO_x$ emissions from a natural draft Naptha reformer with staged combustion air burners.

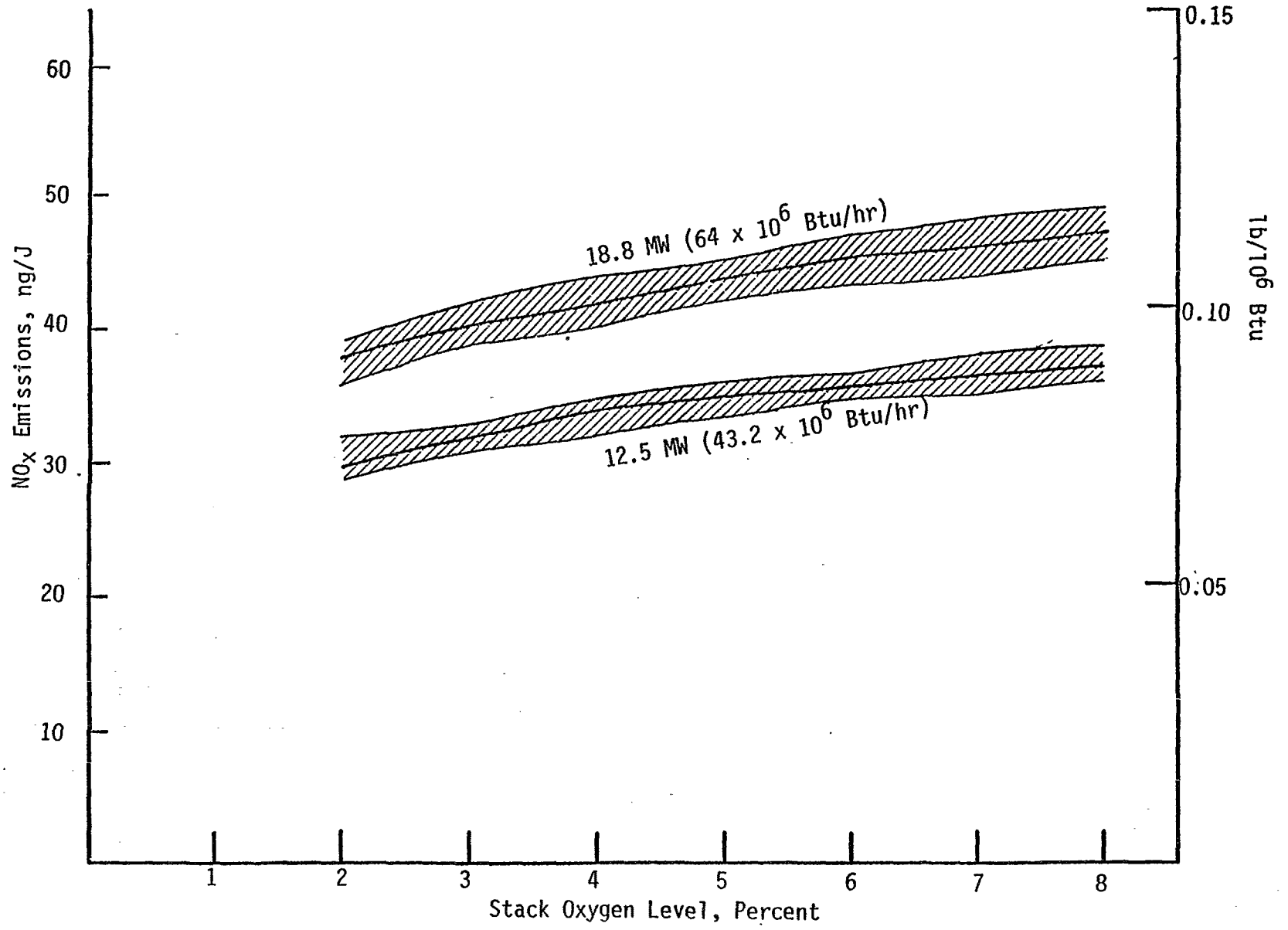


Figure 5-11. $NO_x$ emissions from a balanced draft crude preheater with staged combustion air burners, combustion air preheater to 485 to 500 K.

conditions at the site. Stack oxygen levels and burner air register settings were adjusted to determine their effects on $NO_x$ emissions. Reducing stack oxygen levels decreased $NO_x$ emissions significantly as shown in Figure 5-12. Minor adjustments in burner air register settings did not seem to affect $NO_x$ emissions significantly. However, as the two tests indicated in Figure 5-12 by the hexagonal points, closing the tertiary air register to about 15 percent open and the primary air register to 50 percent open increased emissions moderately. The complete closure of the tertiary air register would simulate a standard burner.

The second test was on a natural draft horizontal heater firing 0.81 percent nitrogen residual oil (Reference 5-63). Twelve 0.97 MW ($3.3 \times 10^6$ Btu/hr) staged air burners were mounted on the long walls of the heater and fired toward the center. The heater was fired at about 9.8 MW ($33 \times 10^6$ Btu/hr) during the test. The stack damper on this heater was stuck, therefore, the burner air registers were adjusted to attempt to reduce excess air levels. Figure 5-13 shows the results of the six tests on this heater. The data points connected by lines represent tests where air register settings were the same. Although the tests with more open air register settings had higher emissions, the differences are probably not significant.

The third test was on a natural draft vertical cylindrical heater firing 0.81 percent nitrogen oil (Reference 5-63). Three 2.24 MW ($7.64 \times 10^6$ Btu/hr) staged combustion air burners were mounted in the floor of the heater. Although most of the tests were conducted at about 6 MW ($20 \times 10^6$ Btu/hr) heat input, one test was conducted at about 6.5 MW ($22 \times 10^6$ Btu/hr). The "as found" stack oxygen level was between 8.1 and 11.4 percent. This was reduced to as low as 6.9 percent by partially closing one of the two stack dampers and by minor adjustments of the burner air registers. No clear indication of the effect of stack oxygen on $NO_x$ emissions can be discerned from the data. Possible reasons for this are that too few tests were conducted and the stack oxygen levels may not have been reduced past the level of maximum emissions above which flame cooling by the combustion air begins to reduce emissions. The results of the seven tests are shown on Figure 5-14.

The simultaneous firing of both liquid and gaseous fuels in the same heater is a more typical occurrence in the chemical and petroleum industries. This is accomplished either by firing only liquid fuels in some burners and only gaseous fuels in the remainder of the burners or by base loadin all of the burners on liquid fuel and supplementing the heat requirements with gaseous fuels. Three tests are available on combined firing of liquid and gaseous fuel in staged combustion air burners.

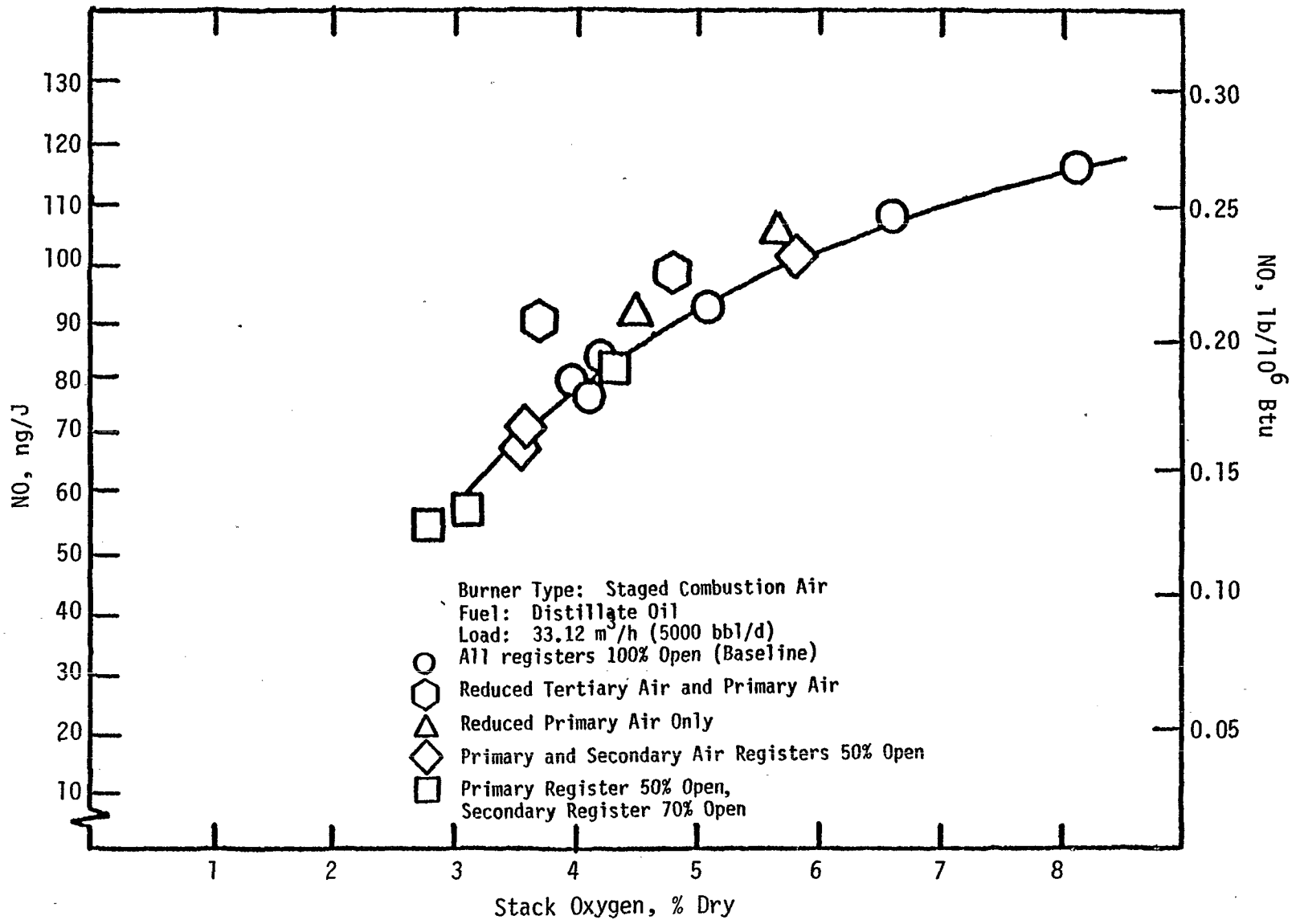


Figure 5-12. NO emissions as a function of stack oxygen for a distillate oil-fired, natural draft process heater.

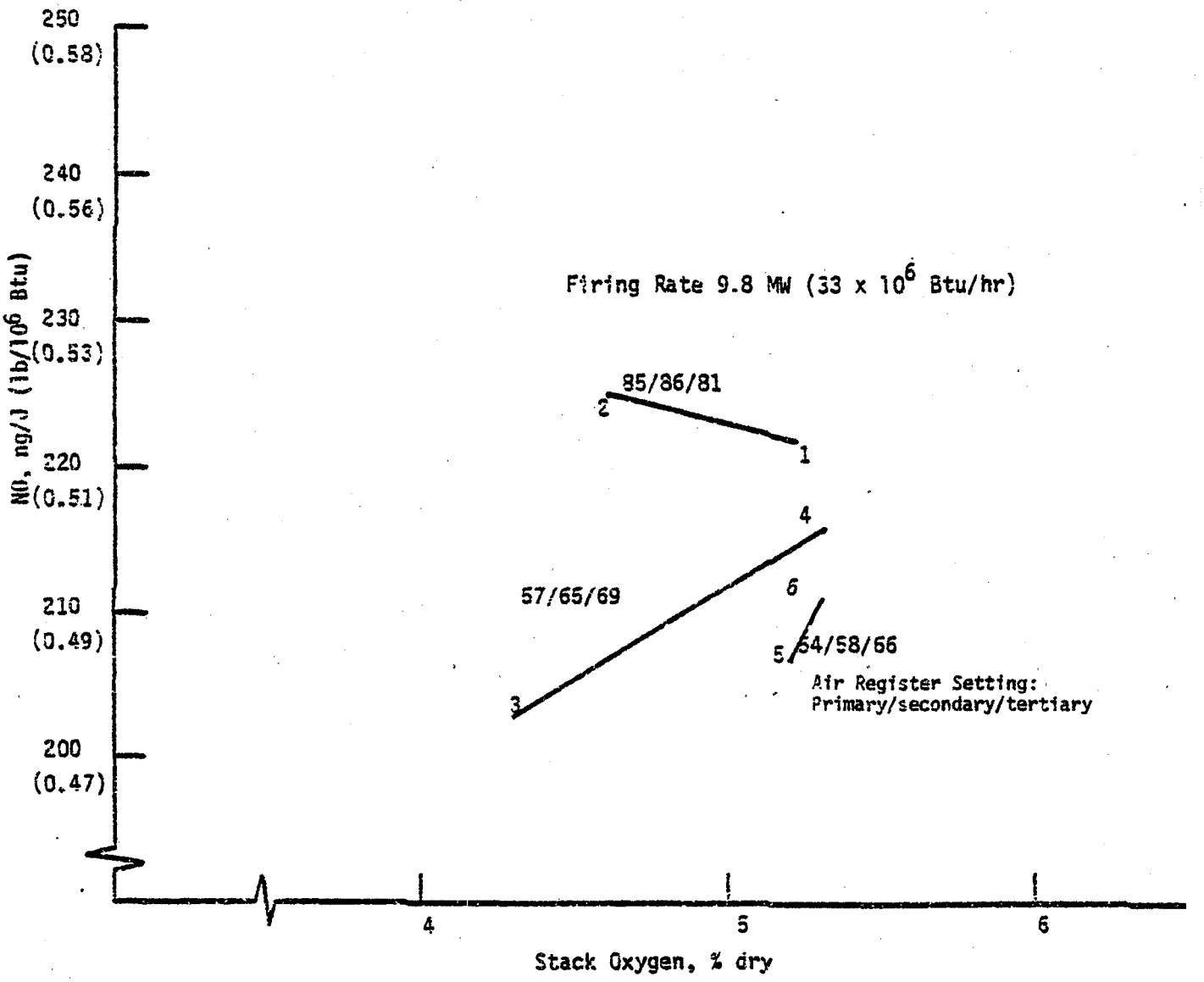


Figure 5-13. Residual oil-fired horizontal heater with staged combustion air burners.

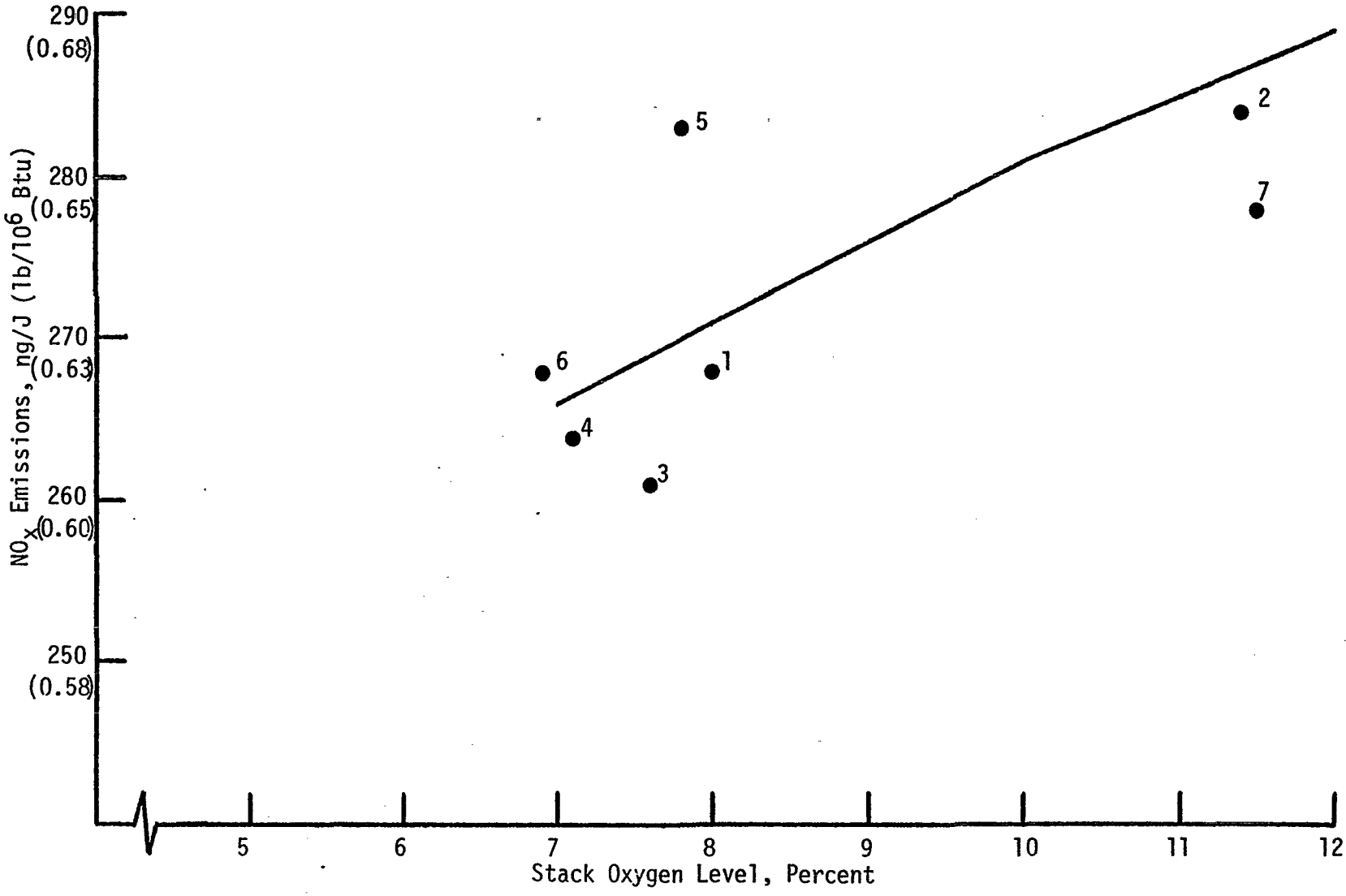


Figure 5-14. Residual oil-fired natural draft cylindrical heater.

The first of these tests consisted of 14 short term emissions evaluations (Reference 5-63). The heater was a vertical rectangular natural draft heater with 10 staged combustion air burners installed. Each burner is rated at 1.2 MW (4 x $10^6$ Btu/hr). The firing rate for the heater during the tests varied from 8.79 MW (30 x $10^6$ Btu/hr) to 11.98 MW (40.9 x $10^6$ Btu/hr). The liquid fuel fired was 0.81 percent nitrogen oil. All but three of the tests were conducted with all burner air registers completely open. A curve for the tests with over 80 percent oil firing and all burner air registers open shows a definite lowering of $NO_x$ emissions with reduced excess air levels. The other three tests were conducted with only minor adjustments to the burner air registers. Considering the small number of tests and variations in firing rate and oil-to-gas ratios, a significant change in $NO_x$ emissions with changes in burner air register settings is not noticeable. Figure 5-15 shows the results of these tests. Tests with different burner air register settings are indicated with different shape data point markers. The percentage of oil fired is also indicated in Figure J. Based upon the two tests with lower rates of oil firing it appears that the percentage or amount of fuel oil fired affects the emissions of $NO_x$.

The other two tests of staged combustion air burners are from long term continuous emission data on heaters firing a combination of refinery gas and residual oil (average nitrogen content of about 0.65 percent)(Reference 5-61). Both heaters were operated by the same refinery. The refinery continuously monitored $NO_x$ emissions to show compliance with a permit requirement that they easily achieved. Therefore, heater adjustments were not usually made to reduce $NO_x$ emissions. The plant did, however, monitor stack oxygen level and adjustments were made when stack oxygen levels were outside control limits.

The first heater was a natural draft vertical cylindrical atmospheric crude heater (Reference 5-61). Eight floor fired burners with a total firing capacity of 377.5 MW (110.6 x $10^6$ Btu/hr) are installed in the heater. The crude temperature to the atmospheric distillation column was between 636 K and 639 K (685°F and 690°F). The oil fraction averaged 31 percent and varied from 20 to 45 percent of the total heat requirement during the almost 1000 hours of data collection. The total fuel firing rate averaged 416.7 MW (122.1 x $10^6$ Btu/hr) and ranged between 67.6 and 466.6 MW (19.8 x $10^6$ and 136.7 x $10^6$ Btu/hr). The stack oxygen levels were maintained between 1.0 and 9.0 percent and averaged 3.5 percent. $NO_x$ emissions for this heater averaged 51.5 ng/J (.12 lb/$10^6$ Btu) and ranged from a low of 30.0 ng/J (.07 lb/$10^6$ Btu) to as high as 68.7 ng/J (.16 lb/$10^6$ Btu). Mathematical modeling of the data could not detect a relationship between oil-to-gas ratio or heater load and $NO_x$ emissions. However, stack oxygen levels did correlate with emissions of $NO_x$. Figure

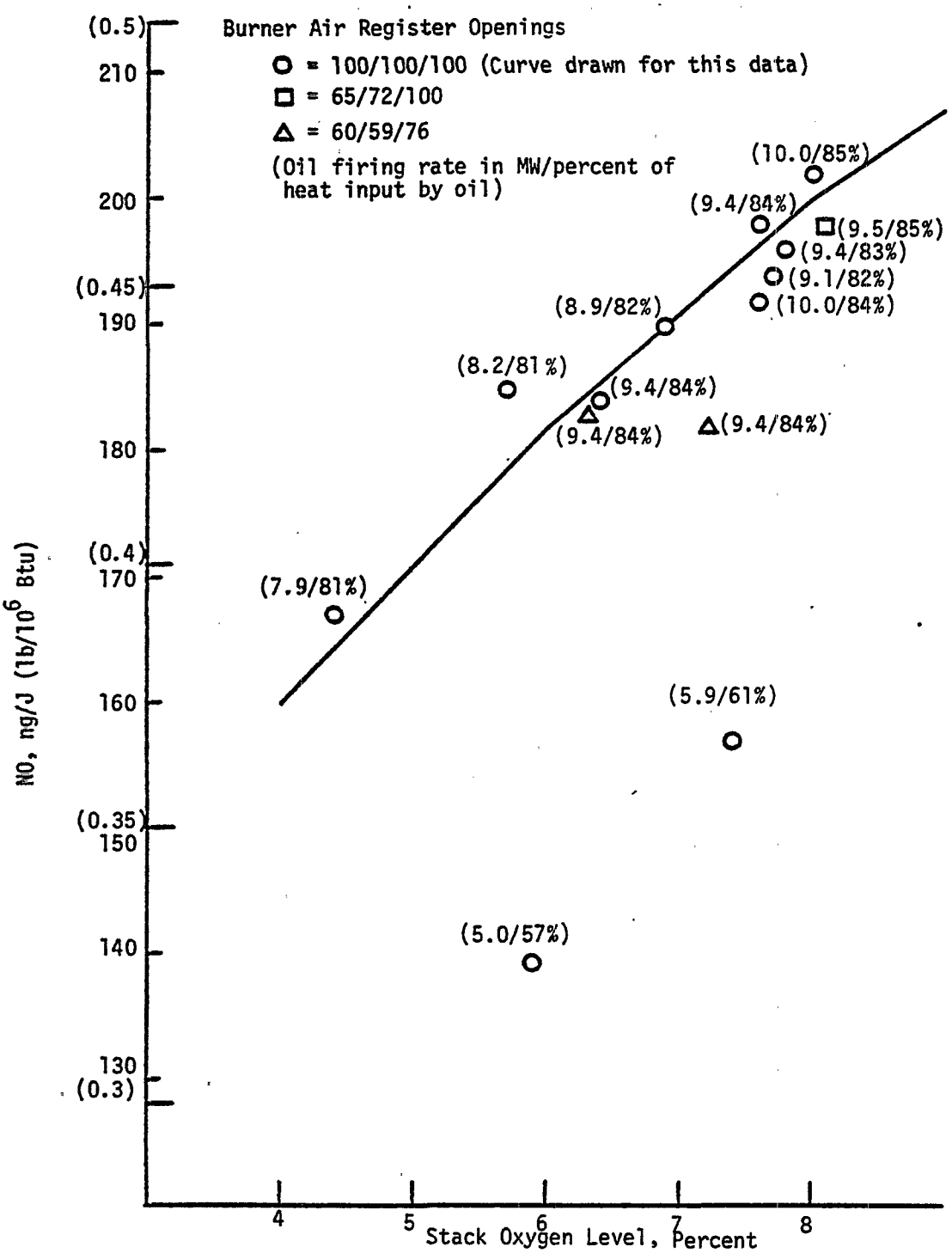


Figure 5-15. Residual oil/refinery gas-fired natural draft heater.

5-16 shows the $NO_x$ emissions as a function of stack oxygen and also the 95 percent confidence limits on the $NO_x$ emissions.

The second heater was a natural draft vertical cylindrical vacuum distillation column heater (Reference 5-61). Four floor fired burners can provide a total heat input capacity of 126.3 MW ($37.0 \times 10^6$ Btu/hr). The process fluid is heated to approximately 650 K (710°F). The oil fraction fired in this heater varied more (0 to 40 percent) but averaged less (6 percent) than the previous heater. The total firing rate averaged 93.2 MW (27.3 $10^6$ Btu/hr) varying from 67.6 to 151.9 MW ($19.8 \times 10^6$ to $44.5 \times 10^6$ Btu/hr). The stack oxygen levels were maintained between 0.9 and 11.4 percent and averaged 3.9 percent. $NO_x$ emissions during these conditions ranged from 17.2 to 51.5 ng/J (0.04 to 0.12 lb/$10^6$ Btu) and averaged 30.0 ng/J (.07 lb/$10^6$ Btu). Mathematical modeling of the data indicated that emissions increased with increasing oil fraction and decreasing load. One possible explanation for this is that the heater was base loaded on oil. Therefore, as load was reduced the oil fraction increased, however, emissions rates were not reduced or reduced only slightly, resulting in an increased emission factor. Figure 5-17 includes the $NO_x$ emissions with 95 percent confidence limits for two different loads as stack oxygen level varies. As with the other heaters $NO_x$ emissions decrease with decreasing stack oxygen level.

All of the above data on staged combustion air burners were collected on cylindrical flame burner designs where the oil gun was in the center of the recirculating primary oil tile, the gas tips were between the primary and secondary tile cases and a tertiary air port surrounds the secondary tile. Data on other burner designs and on other burner types that stage the combustion air are available. At least one manufacturer claims that their burner is designed to incorporate flue gas self-recirculation in addition to staged combustion and the ability to operate at low excess air levels (Reference 5-64). Emissions reported by the vendor for this burner installed in a 6000 barrels/day hydro desulfurization unit show reductions in $NO_x$ emissions while firing gaseous fuels of from 60 to 80 percent compared to a burner considered by this manufacturer to be standard. Data collected by a refinery on a heater with these burners installed show about a 50 percent reduction of $NO_x$ emissions (Reference 5-65). Test furnace data on another manufacturers burner of a somewhat similar appearance (gas tip and oil gun within primary tile and and secondary air port around primary tile) show $NO_x$ emissions as a function of primary air register opening at similar excess air levels from 40 to 70 percent less than a burner considered to be standard by this manufacturer (Reference 5-58). Data for both of these manufacturers' burners show reductions in $NO_x$ emissions during liquid fuel firing of about 30 to 40 percent compared to a burner considered by each to be

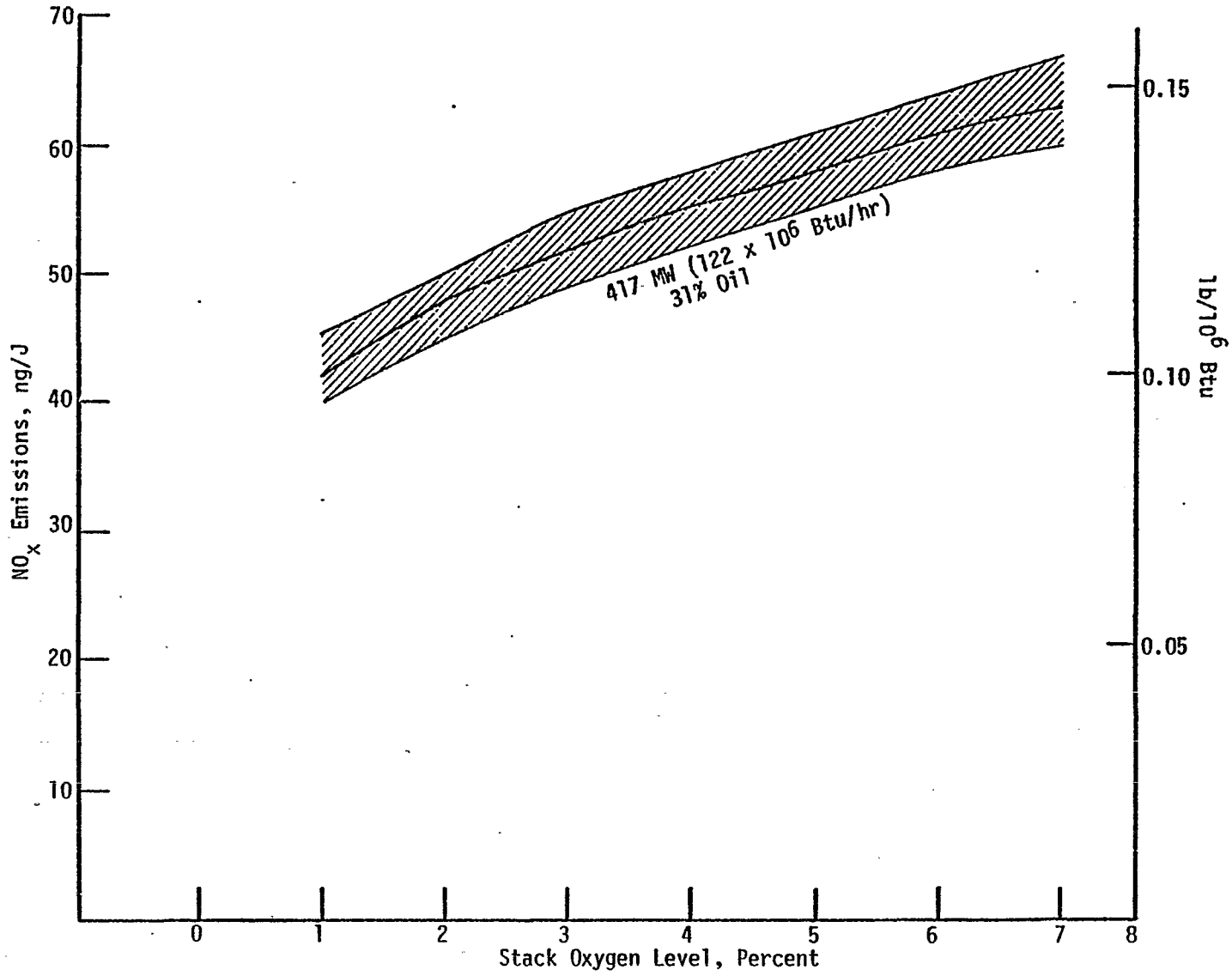


Figure 5-16. $NO_x$ emissions from a natural draft atmosphere crude heater with staged combustion air burners, oil and gas fuel combustion.

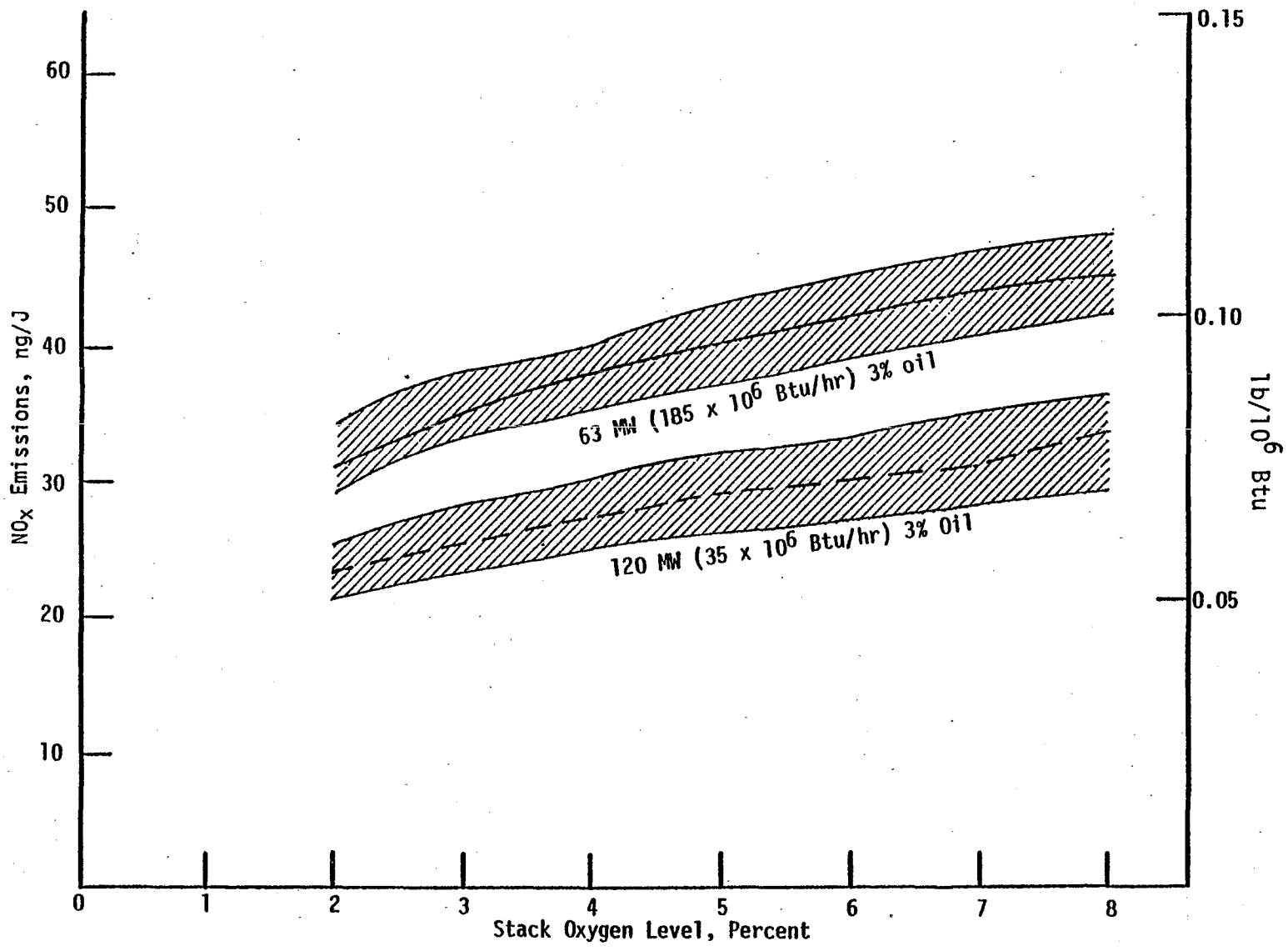


Figure 5-17. $NO_x$ emissions from a natural draft vacuum distillation column heater with staged combustion air burners, oil and gas firing.

standard. Data for the two different burners cannot easily be compared because of differences in test conditions.

At least one manufacturer has two burner designs incorporating staged combustion air that can be substituted for standard high intensity burners and standard flat flame burners (Reference 5-58). Although these burners have been successfully used in full scale turnovers, emission data from full scale furnaces are not available. Test furnace data for the high intensity burners show reductions of $NO_x$ emissions during gas or oil firing of about 60 percent from a burner the manufacturer considers standard. Data presented by the manufacturer show that as fuel nitrogen increases the amount of reduction of $NO_x$ emissions increases. Test furnace data for a low $NO_x$ flat flame burner firing next to a radiant wall shows a reduction of between 40 and 50 percent by changing the staged air port from the side away from the radiant wall to the side of the burner nearest the radiant wall. According to the manufacturer, emissions for both of these flat flame burners are less than the standard flat flame radiant burner.

Staged Air Lances - As a result of a research project to develop a method to reduce $NO_x$ emissions from refinery process heaters, an air lance system was developed, installed, and tested on an operating natural draft vertical cylindrical crude heater (Reference 5-62). The design consists of four 3.18 cm (1.25 in) stainless steel lance tubes inserted through the furnace floor around each of the six 2.68 MW ($9.14 \times 10^6$ Btu/hr) dual fuel burners. A 45° elbow is welded on the end of each lance and a fan was used to supply air to the tubes. An optimum staging height of 0.3 m (1 ft) above the furnace floor was established for gas firing and 1.22 m (4 ft) was established for oil/gas firing. Since burner tile tops were about 0.23 m (.75 ft) above the furnace floor, staging heights of less than this impinged on the burner tile. An optimum burner equivalence ratio (the ratio of air drawn through the burner to the stoichiometric requirement) was not determined, however, emissions declined with decreased equivalence ratio (increased staging). A leveling off of emissions was not apparent at the maximum air injection rate. During short term tests, when fan capacity limited the air injection rate, an $NO_x$ emission reduction of 35 to 45 percent was demonstrated during gas firing and a reduction of about 35 percent was demonstrated during combination oil/gas firing. Short term tests that were conducted after increasing the fan capacity, thereby, allowing increased staging through the air lances, demonstrated lower $NO_x$ emissions during combination oil/gas firing. Additionally, by combining staged air injection with low overall excess air reduction, a further reduction of $NO_x$ emissions could be achieved.

A long term continuous emission test was conducted on this heater. During the test, the crude throughput was maintained at 71.2 $m^3$/hr (10,717 bbls/day) or 66 percent of capacity. The fuel fired during the test was refinery gas with an average calorific value of 61,030 kJ/$m^3$ (1638 Btu/$ft^3$). Fifteen minute average values for stack oxygen, carbon dioxide, carbon monoxide, and nitrogen oxide

were continuously recorded for a 34-day period. The stack oxygen level averaged 2.8 percent during the test with a range from 0.1 percent to 10.8 percent. The first 15 days of the test the heater was operated at an average of 1.9 percent stack oxygen. The average $NO_x$ emissions for this period were 18.5 ng/J (0.04 lb/$10^6$ Btu). The last 16 days of the test the heater was operated at an average of 3.4 percent stack oxygen. The average $NO_x$ emissions for this period were 25.5 ng/J (0.06 lb/$10^6$ Btu). Minimum $NO_x$ emissions were 2 ng/J, however, CO emissions of over 400 ng/J (1 lb/$10^6$ Btu) occurred at the same time. Minimum $NO_x$ emissions without an increase of CO emissions were 12 ng/J (.03 lb/$10^6$ Btu) when stack oxygen levels were 1.0 percent. Maximum $NO_x$ emissions were 59 ng/J (0.14 lb/$10^6$ Btu) where stack oxygen levels were at about 7.3 percent. Although baseline emissions (at 4 percent stack oxygen level) of 66 ng/J (0.15 lb/$10^6$ Btu) were established on this heater prior to the long term test, other tests of the standard burners without air lances being used (see Table 5-12) at about the same load documented emissions as low as 54 ng/J (0.13 lb/$10^6$ Btu).

Staged Fuel Burners - A burner that is being installed in at least two high temperature steam hydrocarbon reformers, one at a U.S. methanol plant, and one at a Canadian methanol plant, offers substantial reductions of $NO_x$ emissions compared to presently used standard burners and possibly many of the low $NO_x$ burners. The burner requires mechanical draft because of the high pressure drop required across the burner (Reference 5-58). At the present time, only gaseous fuels have been used in the burner, however, the manufacturer believes that with proper nozzle design liquid fuels may be able to be fired. The burner can be made in round or conical flame and flat flame designs. Test furnace data by the vendor show a 60 to 70 percent reduction in $NO_x$ emissions from a baseline of 90 ppm at 3 percent $O_2$ (approximately 46 ng/J or 0.11 lb/$10^6$ Btu)(Reference 5-58). Actual emissions data from an operational furnace would probably be higher because of higher furnace temperatures and the use of a high degree of preheat.

Flue Gas Treatment - Two methods of treating process heater flue gases to reduce $NO_x$ emissions are available. Both methods use ammonia as a reactant with NO to form nitrogen gas and steam (Reference 5-65). The difference in the methods is the use of a catalyst to reduce the reaction temperature of 1250 to 1370 K (1800 to 2000°F) required in the non-catalytic method. The two methods are called selective catalytic reduction (SCR) and selective non-catalytic reduction (SNCR) or "Thermal $DeNO_x$." The "Thermal $DeNO_x$ method, patented by Exxon, can incorporate the use of hydrogen to lower the reaction temperature to approximately 980 K (1300°F).

There are at least 24 refinery heaters that have had an SNCR system installed (Reference 5-65). Emissions reductions of 35 to 50 percent have been achieved in new and retrofit situations. It is expected that with improved ammonia injection methods, increased reductions can be achieved. Since one of the disadvantages of SNCR is that the fraction of $NO_x$ reduced decreases as the concentration of $NO_x$ decreases, this technology may not be as effective when used with low $NO_x$ burners firing gaseous fuels. However, some refineries use this as an interim technique to meet permit limits during times of high $NO_x$ emissions such as during oil firing or during high production periods.

At least one U.S. refiner has retrofitted an SCR system on a balanced draft crude topping heater. The heater has been operating since May 1979 without difficulty (Reference 5-65). The catalyst activity has not deteriorated nor the pressure drop increased in spite of seven emergency shutdowns unrelated to the heater and several occasions when the furnace operated under a temporary upset condition. Emissions have been reduced by 90 percent from an average of 100 ppm to an average of 10 ppm.

Costs - The cost of controlling $NO_x$ emissions from refinery heaters has been reported in at least two studies. The most comprehensive study of costs was recently accomplished by the South Coast Air Quality Management District and the Stationary Source Control Division of the California Air Resources Board. This study, which will be referred to as the CARB report, was developed as part of the background information for a public meeting considering $NO_x$ emissions control from boilers and process heaters at refineries. The major technologies for which cost data were developed were the retrofit installation of low $NO_x$ burners, selective non-catalytic reduction and selective catalytic reduction. A less comprehensive study evaluated the cost of retrofitting a staged air lance system and automatic oxygen trim control on a process heater. These two studies are the source of cost information presented in this section (References 5-65, 5-66). The costs of $NO_x$ control will be presented in the following order: automatic oxygen trim control, low $NO_x$ burners, selective non- catalytic reduction and selective catalytic reduction.

Automatic Oxygen Trim Control - Although automatic oxygen trim systems are common on large chemical industry heaters, most refineries that control stack oxygen levels do this manually by using plant operators to adjust stack dampers. The daily time required to monitor and adjust stack oxygen level varies with the level of oxygen control desired and the variabilities in process heat requirements and fuel composition. One plant has estimated that about two hours per day are required to adjust stack oxygen levels on six heaters in order to control $NO_x$ emissions

(Reference 5-61). Much of this time could be reduced by installing an automatic oxygen trim system. Additional benefits that may be gained include tighter control of the excess air levels and decreased potential of upset conditions occurring. The installed cost of retrofitting an automatic draft controller to a natural draft heater of about 16 MW (55 x $10^6$ Btu/hr) thermal input capacity was expected to be about $40,000 (Reference 5-62). It was estimated that the initial cost of an automatic draft controller would be proportional to the heat input rate to the 2/3 power. Annual maintenance costs for the automatic systems were estimated to be about $200. Because of the tighter control achievable with an automatic draft controller, additional fuel savings could be achieved resulting in an overall cost savings. These fuel savings were estimated at about $32,000 per year for a 16 MW (55 x $10^6$ Btu/hr) heater; $59,000 per year for a 29.3 MW (100 x $10^6$ Btu/hr) heater; and $296,000 per year for a 147 MW (500 x $10^6$ Btu/hr) heater (Reference 5-62). The annualized savings for these heaters were estimated to be about $17,000, $35,000 and $230,000 respectively (Reference 5-62).

Low $NO_x$ Burners - Low $NO_x$ burners are capable of being installed in most process heaters. However, because of the differences in installation requirements and heat distribution requirements, the cost to retrofit low $NO_x$ burners in two different heaters of the same size may be substantially different. Data collected from eight refineries on the cost of retrofitting low $NO_x$ burners in nine separate heaters is presented in Table 5-13 (Reference 5-65). As can be seen in this table, a wide variation in burner costs and retrofit costs exists, and the variation would not be estimated by adjusting for the size of the furnace. In the document where these data are presented, it is stated that the annual cost of retrofitting low $NO_x$ burners can be estimated using a scale up factor of 0.6 from the cost of $11,795 for retrofitting a 9.4 MW (32 x$10^9$ Btu/hr) furnace. A contingency factor of 35 percent was added to this estimation in a later supplement to the report. Therefore, the cost of retrofitting low $NO_x$ burners using this procedure could be estimated using the formula $I = 4160\ (Q)^{0.6}$, where Q is in MW (or $I = 1990\ (Q)^{0.6}$, where Q is in $10^6$ Btu/hr). However, by regression analysis of the retrofit cost and heater size presented in the table, a scale up factor of 0.96 is calculated with a correlation coefficient of 0.85. Using this analysis with a contingency factor of 35 percent, the retrofit cost could be estimated using the formula $I = 1500\ (Q)^{0.96}$ where Q is in MW (or $I = 456\ (Q)^{0.96}$ where Q is in $10^6$ Btu/hr). It should be realized that because of the variabilities in the cost of retrofitting low $NO_x$ burners, either one of these estimation methods may be off by a factor of two or three.

TABLE 5-13. RETROFIT COSTS FOR LOW $NO_X$ BURNERS

| Refinery | Size of Furnace ($10^6$ Btu) | Cost of Burners-Dollars (Year) | Retrofit Cost-Dollars (Year) | Total Cost-Dollars (Year) | Total Cost (1981 Dollars) | Total Annualized Cost (1981 Dollars) |
|---|---|---|---|---|---|---|
| Beacon | 31.29 | 10,400 (1978) | 4,000 (1978) | 14,400 (1978) | 19,645 | 5,375 |
| Chevron | 90 | 120,000 (1981) | 80,000 (1981) | 200,000 (1981) | 200,000 | 54,720 |
| Coastal Petroleum | 21.7 | 10,000 (1979) | 11,000 (1979) | 21,000 (1979) | 26,261 | 7,185 |
| ECO Petroleum | 27 | 4,360 (1977) | 17,660 (1977) | 22,020 (1977) | 32,204 | 8,811 |
| Golden Eagle | 25.7 | 4,800 (1979) | 10,000 (1979) | 14,800 (1979) | 18,508 | 5,064 |
| Kern County | 20.6 | 5,800 (1979) | 20,000 (1979) | 25,800 (1979) | 32,263 | 8,827 |
| Newhall | 5 | 4,800 (1979) | 9,320 (1979) | 14,120 (1979) | 17,657 | 4,831 |
| Newhall | 5 | 2,220 (1979) | 4,660 (1979) | 6,880 (1979) | 8,604 | 2,354 |
| Texaco | 40 | 8,640 | 13,820 | 22,460 | 32,848 | 8,987 |
| Average | $\frac{286.29}{9}$ = 31.8 | | | | | $\frac{106,154}{9}$ = 11,795 |

Selective Non-catalytic Reduction - The use of selective non-catalytic reduction requires the installation of the system and controls to inject the ammonia at the proper location in the heater or the ammonia and hydrogen if the temperatures in the heater are lower than required, and a hydrogen and/or an ammonia storage tank. The cost of one refinery to retrofit the system, controls and a large ammonia storage tank to control $NO_x$ emissions from a 9.4 MW (32 x$10^6$ Btu/hr) heater were $83,000 in 1980. Of this $83,000 installation cost, $20,000 was attributed to installing an ammonia tank. To estimate the retrofit costs for other facilities, the authors of the CARB report made the assumption that an ammonia storage tank would not be required at all facilities and that the system and controls can be estimated using a scale-up factor of 0.6. The resulting formula to estimate the capital cost of a SNCR system is $I = 16420\ (Q)^{0.6}$, where Q is in MW (or $I = 7860\ (Q)^{0.6}$, where Q is in $10^6$ Btu/hr.) The annual cost of controlling $NO_x$ with SNCR was made by assuming a capital recovery factor of 0.274; maintenance, labor and spare parts cost of 3 percent of capital cost; and a plant overhead cost of 25 percent of maintenance and labor. Therefore, excluding annual costs of ammonia, steam and hydrogen, the annual costs would be about 0.31 of the total capital cost. The annual cost of ammonia, steam and hydrogen were estimated using the following additional assumptions: (1) an ammonia to $NO_x$ mole ratio of 1.5 to 1.0 at a retail cost of ammonia of $0.25 per pound (wholesale costs of $0.125 per pound could be used if 2 large storage tanks were installed), (2) a steam requirement of 12 pounds per $10^6$ Btu of fuel used at a cost of $3.50 per 1000 pounds of steam, and (3) a hydrogen to ammonia mole ratio of 1.0 to 1.0 at a cost of $1.10 per pound of hydrogen.

Selective Catalytic Reduction - Estimating the costs of retrofitting an SCR system to reduce $NO_x$ emissions is more difficult than predicting the costs of SNCR or low $NO_x$ burner retrofits. Some of the reasons for these difficulties include greater site characteristic dependencies; whether reheat before the catalyst bed is required; and other contingencies such as furnace down time requirements, frequency, type, and amount of liquid fuel fired in the furnace, start up costs, and vendor guarantee costs.

One refinery installed a selective catalytic reduction sytem using in-house labor on a new 14.2 MW (48.5 x $10^6$ Btu/hr) boiler. The capital cost of this installation was $333,000 in 1980. By using a factor of 1.25 to account for contracting the installation, adding a 35 percent contingency factor, and including a site factor of 2.2 when reheat is required or 1.5 when reheat is not necessary, a formula to estimate the capital cost of an SCR system for heaters of different sizes was developed. The formula for a unit requiring reheat is: $I = 255{,}400\ (Q)^{0.6} + 3170\ Q$, where Q is

the rated heat input in MW (or $I = 122{,}000(Q)^{0.6} + 9300\ Q$, where Q is in $10^6$ Btu/hr). The formula for a unit that does not require reheat is: $I = 174{,}000(Q)^{0.6} + 31700\ Q$, where Q is the rated heat input in MW (or $I = 83{,}000(Q)^{0.6} + 9300\ Q$, where Q is in $10^6$ Btu/hr). The second term in these equations is the cost of the catalyst, which is estimated to last about two years. Annual operating costs can be estimated by multiplying the capital cost of the system by the factor specified before, which covers the capital recovery factor; maintenance, labor and spare parts requirements; and plant over-head requirements. In addition, the cost of ammonia which must be added at a $NO_x$ mole ratio of 1 to 1, catalyst replacement every two years, steam costs at a rate of 0.5 lb per $10^6$ Btu fired, and electrical costs at 0.25 KW per $10^6$ Btu fired must be included.

### 5.3.1.2 Catalytic Crackers and CO Boilers

#### 5.3.1.2.1 Process Description

A fluid-bed catalytic-cracking unit is often an integral part of a modern refinery. Preheated gas oil is charged to a moving stream of hot regenerated catalyst while it is being transferred from the regenerator to the reactor. The gas oil is cracked in the reactor or the tube inlets to the reactor; the products then pass through cyclone separators for removal of entrained catalyst and are cut into products in a fractionator. Coke forms on the catalyst during the reaction.

Spent catalyst is withdrawn from the bottom of the reactor and transferred to the regenerator where coke is burned off. The regenerator flue gas passes through cyclone separators for catalyst removal and is discharged through the stack. The hot, regenerated catalyst flows back to the reactor, supplying heat and catalyzing the cracking reaction.

The regenerator flue gas contains from 6 to 12 percent carbon monoxide. This gas is sometimes fed to a CO boiler where it is burned in preheated air to generate steam. Auxiliary fuel is required to maintain satisfactory combustion conditions and to allow variable firing rates to meet the refinery steam demands.

#### 5.3.1.2.2 Emissions and Control Technology

$NO_x$ is also released from the catalytic-cracking regenerator and from CO boilers, which are fired by the catalytic cracker off gas. Emission testing in CO boiler stacks, summarized in Table 5-14, has shown results ranging from 100 ppm to 230 ppm of $NO_x$. Hunter (Reference 5-34) reported

TABLE 5-14. $NO_x$ EMISSIONS FROM PETROLEUM REFINERY CO BOILERS (REFERENCE 5-33)

| Investigator | $NO_x$ (ppm as measured) |
|---|---|
| Schulz, et. al., (Reference 5-67) | 104-116 (average 106) |
| Schulz, et. al., (Reference 5-68) | 70-89 (average 78) |
| Shea (Reference 5-71) | 96-233 (average 163) |
| Shea (Reference 5-69) | 101-159 (average 135) |
| Cowherd (Reference 5-70) | 108-162 (average 129) |

testing one CO boiler that was equipped with staged air ports. Baseline emissions were 126 ppm. Lowering excess oxygen from 2.1 to 1.8 percent reduced $NO_x$ by 8 percent. Adjustment of the air ports and BOOS has negligible effect on $NO_x$ emissions. CO emissions, however, were very sensitive to excess air and increased rapidly below about 2 percent excess oxygen. The lack of response of $NO_x$ to combustion modifications is attributed to $NO_x$ that is formed from ammonia in the CO gas feed acting similarly to fuel nitrogen in oil or coal.

The average emission factor for $NO_x$ from fluid catalytic cracking units is estimated in Reference 5-23 as 0.24 kg $NO_2$/liter feed (84.0 lb/$10^3$ bbl feed). The total nationwide annual emissions from fluid bed and thermal cat crackers was estimated to be 45 Gg (50,000 tons) in 1974. If the regenerator exhaust is burned in a CO boiler , the resulting $NO_x$ emissions can presumably be controlled by the classical methods discussed in Section 4.2 of this report.

### 5.3.2 Metallurgical Processes

#### 5.3.2.1 Process Description and Control Techniques

The iron and steel industry is the predominant source of $NO_x$ emissions derived from metallurgical processes. Other industries, such as aluminum production, extensively use electric melting furnaces or operate the process equipment at temperatures below the minimum required for formation of significant quantities of $NO_x$. Copper, lead, and zinc smelting require combustion operation in the reverberatory furnaces and converters (copper) and in sintering machines (lead and zinc). These combustion emissions are deemed insignificant relative to the emissions from the iron and steel industry. Emissions from these other industries may become significant as a result of the trend toward higher melting rates in new equipment designs. This section reviews the equipment types and available $NO_x$ control technology for the major sources of $NO_x$ within the iron and steel industry. Section 5.3.2.2 summarizes $NO_x$ emission factors for these equipment types. Major portions of this section are taken from a 1976 IGT study (Reference 5-33) which uses 1971 steel industry data as a source for fuel consumption and $NO_x$ emissions estimates.

Pelletizing

Pelletizing of extremely fine low grade iron ore occurs in a specially designed furnace at or near the iron mine. The cost of shipping the unbeneficiated ore would be almost double that of the pelletized product.

Previous studies by the Institute of Gas Technology have shown that pelletized ore production will be about 54 Tg per year (60 million tons/yr) by 1985. The fuel consumed by the pelletizing furnaces has remained about constant at 0.7 MJ/kg (600,000 Btu/ton). This indicates that annual $NO_x$ emissions from pelletizing furnaces will reach about 7.65 Gg (8,500 tons) by 1985. The steel industry

and equipment builders are considering coal firing the pelletizing furnace combustion chambers. If this is done, it will probably bring about an increase of about 50 percent in $NO_x$ emissions. There is no information available concerning $NO_x$ control techniques for pelletizing furnaces (Reference 5-33).

Sintering

Some of the iron ore and flue dusts are available in particle sizes too small to be charged directly to the blast furnace. These particles are mixed with flux and coke breeze and loaded onto a traveling grate-sintering machine. An auxiliary fuel such as natural gas, coke oven gas, or oil is used to initiate combustion on the surface of the mixture and is referred to as ignition fuel. Combustion is continued over the length of travel by forcing air through the mixture on the grates. The mixture is heated to a fusion temperature, which causes agglomeration of the iron-bearing particles. The discharged sinter is cooled, crushed, and screened prior to transfer to the blast furnace charging oven.

The major source of energy used in the production of sinter is the carbon content of coke breeze and flue dust. The amount of ignition fuel required is about 140 J/g (0.12 million Btu per ton) of sinter. The total fuel requirement, including coke breeze, is about 1.74 kJ/g (1.5 million Btu per ton) of sinter.

The use of sinter machines to agglomerate ore fines, flue dust, and coke breeze has been declining since 1966 and amounted to 39 Tg ($43 \times 10^6$ tons) in 1971. If the present rate of decline continues, the 1985 production of sinter would be about 24.3 Tg ($27 \times 10^6$ tons). The attitude of the steel industry is mixed because many steel plants are phasing out sinter lines, while at least one major producer has replaced several small sinter lines with a large machine designed to meet pollution control regulations. On the other hand, the use of sintering for recycling iron has simultaneously been increasing. Therefore, the projected decrease in the number of sinter machines may not occur. In any case, the IGT estimates (Reference 5-33) show that $NO_x$ will continue to be a major pollutant. There is no information available concerning $NO_x$ emission control techniques for these furnaces.

Blast Furnace

The blast furnace is the central unit in which iron ore is reduced, in the presence of coke and limestone, for the production of pig iron. The blast furnace itself is normally a closed unit and therefore has no atmospheric emission. A preheated air blast is supplied to the furnace from the blast furnace stove, through nozzle-like openings called tuyeres. The subsequent reactions in the blast furnace are not pertinent to this discussion. Excellent descriptions are available, however, such as the complete discussion of the process of changing raw ore to finished steel published by the United States Steel Corporation (Reference 5-72).

The hot blast reacts with the coke to produce heat and more carbon monoxide than is needed to reduce the ore. The excess CO leaves the top of the blast furnace with other gaseous products and particulates and is known as blast furnace gas. This gas is cleaned to remove the particulates, which could later cause plugging. It is then available for heating purposes. Blast furnace gas contains about one percent hydrogen and 27 percent carbon monoxide; it has a heating value of approximately 3600 kJ/Nm$^3$, or, 92 Btu/ft$^3$ (Reference 5-72).

Coke Ovens

Coke is an essential component in making pig iron and steel; coke ovens are generally an integral part of the steel plant complex. One-sixth of the total bituminous coal produced is charged to coke ovens. On the average, 1.4 kg of coal is required for each kilogram of coke produced.

Conventional coking is done in long rows of slot-type ovens into which coal is charged through holes in the top of the ovens. The sidewalls, or liners, are built of silica brick, and the spaces between the chambers are flues in which fuel gas burns to supply the required heat. Each kilogram of coal carbonized requires 480 to 550 kJ (450 to 520 Btu). Flue temperatures are as high as 1,753K or 2,700F (Reference 5-73). Much of the remaining heat in the partially spent combustion gases is accumulated in a brick checkerwork, which releases it to preheat the combustion air when the cycle is reversed. This is a typical regenerative cycle to conserve fuel and give a higher flame temperature.

The coal in the coking chambers undergoes destructive distillation during a heating period of about 16 hours. The noncondensable gaseous product is known as coke oven gas and on a dry basis has a heating value of about 22 MJ/Nm$^3$ (570 Btu/ft$^3$). Approximately 35 percent of the coke oven gas produced is used in heating the oven.

The major sources of emissions from coke ovens are the rapid evolution of steam and other gases when moist coal is charged, the discharge of gases and particulates from the charging openings during charging, and the emissions during the coke push and subsequent quencing. Recent coke-oven battery designs have reduced the emissions from charging and pushing by using advanced engineering features and improved operating procedures. During the coking process, leakage from the push side and coke side door seals can account for most of the emissions during the coking process itself. Improved door sealing techniques reduce door leakage substantially.

Although the current practice of firing coke ovens with a mixture of blast furnace gas and coke-oven gas and slow mixing in the combustion chambers should tend to minimize $NO_x$ production, the estimated total is substantial because of the large quantity of fuel consumed.

The reduction in the coke required per kilogram of hot metal achieved during the 1960's will continue, but steel mills are currently installing new coke ovens because of the increased need for

hot metal due to the high BOF* hot metal-scrap ratio. It is believed that the decline in coke rate may have been stopped by the increased cost of fossil fuels used as injectants. The 1985 projection for coke-oven underfiring fuel is 485 PJ (458 trillion Btu). If the $NO_x$ concentration remains constant, the resulting total emissions of $NO_x$ will reach 57.8 Gg (64,120 tons) per year.

Although it may be reasonable to assume that substitution of form coke may result in a substantial reduction in $NO_x$ production, the general opinion in the steel industry is that form coke will not be a significant factor in 1985 (Reference 5-33).

Blast Furnace Stove

Between 2.2 and 3.5 kg of blast furnace gas is generated for each kilogram of pig iron produced. Some 18 to 24 percent of this gas is used as fuel to heat the three stoves which are usually associated with each blast furnace. Two are generally on heat while the third is on blast.

The blast furnace stove is a structure about 8 to 8.5 m (26 to 28 feet) in diameter and about 36 m (120 feet) high. A roughly cylindrical combustion chamber extends to the top of the structure and the hot combustion gases pass through a brick checkerwork to the bottom by reverse flow and then to the stack. The checkerwork usually contains 25,500 $m^2$ (275,000 $ft^2$) of heating surface and has about 85 percent thermal efficiency. Unlike the conventional regenerators, which extract heat from the waste combustion gases, the blast furnace stove is heated by burning fuel. The stored heat is then used to preheat air for the combustion of fuel in the furnace to be served.

As in the case of coke oven underfiring, the blast stoves require very large quantities of fuel for heating. However, since the stoves are heated primarily with blast-furnace gas (3.0 to 3.5 $MJ/Nm^3$, or 80 to 95 $Btu/ft^3$) the $NO_x$ concentration is lower due to the presence of diluents and a low flame temperature.

The projected need for hot metal in 1985 is 112 Tg (124 million tons). This amount of hot metal will require 295 PJ (280 trillion Btu) for blast-stove heating. Assuming no reduction in $NO_x$ stack-gas concentration, the $NO_x$ emission in 1985 will be 17.7 Gg/yr (19,600 tons/yr). Because of the low estimated $NO_x$ concentration and the presence of inerts in the fuel gas, equivalent to flue-gas recirculation, the potential for $NO_x$ reduction is probably small (Reference 5-33).

Open Hearth Furnace

Steel making by the open hearth process has been decreasing since it reached a peak in 1956, when it represented 90 percent, or 92.7 Tg (103 million tons), of the total production. The use of open hearth furnaces is expected to continue to decline and will probably amount to about 10 percent of total steel production by 1985. Regardless of this dramatic decline due to the inroads of the basic oxygen furnace (BOF) and electric arc furnace steelmaking processes, its $NO_x$ emission potential deserves consideration.

*Basic Oxygen Furnace

The open hearth furnace is both reverberatory and regenerative, like the glass melting furnace. It is reverberatory in that the charge is melted in a shallow hearth by heat from a flame passing over the charge and by radiation from the heated dome. It is regenerative in that the remaining heat in the partially spent combustion gases from the reverberatory chamber is accumulated in a brick filled chamber, or "checker", and released to preheat the incoming combustion air when the cycle is reversed. Fuel of low calorific value such as blast furnace gas as well as the combustion air may be preheated by the checkers in order to obtain the high temperatures required.

Hot metal from the blast furnace, pig iron, scrap iron, and lime are the usual materials charged to an open hearth furnace. These are heated over a period averaging 10 hours, at a temperature as high as the refractories will permit. Fuel oil is the preferred fuel and is burned with excess air to provide an oxidizing influence on the charge.

$NO_x$ emissions from open hearth furnaces are very high because of the high combustion air preheat temperature, high operating temperature, and the use of oxygen lances to increase production rates. The data available indicate that $NO_x$ concentrations will be in the 1000 to 2000-ppm range. Although many open hearths are being phased out because of emission control difficulties and better economics of steel production with the BOF process, several steel mills are modernizing open hearth shops, including pollution control equipment to provide flexibility in the hot metal-scrap ratio, particularly those mills with a hot-metal deficiency. Therefore, predictions that the open hearths will be phased on entirely by 1985 are unrealistic, and it is anticipated that about 13.5 Pg (15 million tons) will still be made by the open hearth process in 1985. Fuel consumption has been decreasing and may reach 2.9 MJ/kg (2.5 million Btu/ton) in 1985. This will require a fuel consumption of 40 PJ (37.5 trillion Btu) for open hearth steel production and result in an $NO_x$ emission level of 14 Gg (15,750 tons) (Reference 5-33).

Basic Oxygen Furnace

In the basic oxygen furnace (BOF), oxygen is blown downward through a water-cooled lance into a bath containing scrap and hot metal. Heat produced by oxidation of carbon, silicon, manganese, and phosphorous is sufficient to bring the metal to pouring temperature and auxiliary fuel is not required. The furnace is an open top, tiltable, refractory-lined vessel shaped somewhat like the old-fashioned glass milk bottle. Furnace capacities range up to 309 Mg (340 tons). The time required per cycle is very short — from 45 to 60 minutes.

The BOF has displaced the open hearth as the major steel production process, but is much less flexible because of the inherent limitation of 25 percent to 30 percent scrap in the charge. The

amount of BOF capacity in an integrated steel plant is, therefore, closely associated with hot metal availability. Additional flexibility in scrap use can be obtained by preheating the scrap with an oxygen-fuel burner. In many steel plants, the open hearth shop is modernized and equipped with appropriate pollution control equipment so that it can be used in conjunction with BOF shops to provide the required flexibility to accommodate variations in hot metal-scrap ratio. A combination of BOF shops and electric furnace shops provides the maximum in flexibility and may represent the makeup of future steelmaking facilities.

Excluding fuel use for scrap preheating, other uses are for refractory dryout and to keep the BOF vessel from cooling between heats. Their uses amount to about 232 kg per kg (200,000 Btu per ton) of steel produced.

Decarburization of the iron charged to the BOF produces about 467 kJ of carbon monixide per kilogram of steel (400,000 Btu/ton). The off-gases also contain large amounts of particulates, which must be removed before discharge into the atmosphere. Typical American practice is to burn the combustible gases in water-cooled hoods mounted above the BOF vessel, cool with excess air or water sprays, and pass the cooled gases through high-energy scrubbers or electrostatic precipitators. In most cases, the BOF vessels are equipped with open hoods that admit air for combustion of carbon monoxide on a relatively uncontrolled basis. If additional steam can be used in the plant, the combustion hood can be used as a steam generation device, although the steam production will only be cyclic. Some new plants use suppressed combustion hoods which do not inspire air and burn off-gases. New BOF capacity is expected to continue this trend, which may cause a decrease in total $NO_x$ emissions.

During the combustion of the waste gas, the potential for $NO_x$ production exists. One steel manufacturer gives a range of values of from 30 to 80 ppm, or 180 to 500 ng $NO_x$ per kg (0.36 to 1.0 lb $NO_x$ per ton) of steel produced. There is no information available on $NO_x$ control techniques for the basic oxygen furnace (Reference 5-33).

Soaking Pits and Reheat Furnaces

These are large furnaces with fuel inputs ranging from 1.17 to 4.12 MJ/kg (1.0 to 3.5 x $10^6$ Btu/ton) heated. Fuel efficiency is affected by many factors such as furnace size, design, combustion controls, combustion air temperature, furnace scheduling, and downtime. Improved efficiency measures, which do not increase flame temperature, will, in general, reduce $NO_x$ emissions in proportion to the reduction in fuel usage.

Existing fuel conservation measures in soaking-pit heating include improved scheduling so as to charge at a higher ingot temperature, programmed input control, improved burner designs, air/fuel ratio control responsive to stack-gas oxygen content, addition of recuperators to existing cold combustion air installations, and use of recuperators designed to give higher preheat temperature. Of these, the use of high-mixing-rate burners and an increase in combustion air preheat are likely to increase the $NO_x$ emission level. At the present time, only experimental information is available concerning the effect of these parameters on $NO_x$ levels.

Soaking-pit and reheat-furnace operating temperatures are such that the estimated $NO_x$ levels should fall in the 250 to 350-ppm range. However, the very large amounts of fuel used result in a total $NO_x$ output estimated at 97 Gg (107,000 tons) in 1971.

A major factor that will reduce consumption of purchased and in-plant fuels and thereby decrease $NO_x$ output is the trend toward use of continuous casting to replace some ingot casting. In this process, billets and slabs which are hot-rolled prior to cooling are produced from molten steel, thus eliminating soaking-pits and most of the reheat requirement. About 20 percent of total steel production, or 36 Tg (40 x $10^6$ tons), is estimated to be produced by continuous casting in 1985. In spite of this, soaking-pit and reheating furnace steel capacity will have to be increased during the 1975 to 1985 period to provide for the expected growth in steel production and for the steel which for process reasons will have to be cast in ingots. According to the IGT projection, conventional steel processing will account for 144 Tg (160 x $10^6$ tons) in 1985. At present fuel consumption of 5.4 MJ/kg (4.7 x $10^6$ Btu/ton), the total fuel consumed for soaking-pits and reheat furnaces in 1985 will be 795 PJ (750 x $10^{12}$ Btu). This fuel consumption will result in estimated $NO_x$ emissions of 143 Gg (157,900 tons).

Heat Treating and Finishing Operation

This category includes annealing, hardening, carburizing and normalizing of some of the steel industry cold-rolled products, as well as production of coated products. Fuel consumption in 1971 was about 632 PJ (600 x $10^{12}$ Btu) for the production of cold-rolled products (about 25 percent of total steel production). $NO_x$ emission levels are assumed to be in the 150 to 250-ppm range. On this basis, total $NO_x$ emission in 1971 for this category will be about 7.6 Gg (8,400 tons). Assuming that production of cold-rolled products remains at about 25 percent of total steel production, the 1985 $NO_x$ emission will amount to 10 Gg (11,200 tons) per year. There is no information available concerning $NO_x$ control techniques for these sources (Reference 5-33).

Electric Furnaces

Production of steel in electric-arc furnaces has grown rapidly since World War II and is currently estimated to be about 20 percent of total steel production. Because of the phase out of open hearth steelmaking, the increase in BOF steel production, and the associated scrap-use limitation, the amount of steel produced in electric-arc furnaces is expected to increase even more.

The combustion of fossil fuels currently plays a very small role in electric steelmaking. This may change in the future as advances in technology permit the increased use of scrap preheating. Most authorities agree that scrap preheating will be accomplished outside the electric-arc furnace in a specially designed charging bucket, probably equipped for bottom discharge. Many of the designs use excess air burners to limit flame temperature and minimize oxidation of the scrap. Associated air-pollution problems include particulates from dirty scrap, iron oxide, and oil vapors. The requirement for both incineration at or above 1,033K (1,400F) and particulate removal has caused shutdown of several scrap preheating installations because of economic considerations.

The use of electricity for heat in steel production transfers the $NO_x$ emissions to the utility plant where the problem is easier to control. Electric furnaces are, in any case, a very minor source of $NO_x$ from the steel industry (Reference 5-33).

5.3.2.2 Emissions

Emissions in the steel industry and its related processing have historically consisted of fumes, smoke, and dust or particulates. The gases usually considered obnoxious have been $SO_2$, CO, and odors. The presence of oxides of nitrogen has been obscured by the heavy emission of particulates and a resulting lack of physical evidence. The $NO_x$ emissions observed can be traced largely to the combustion of fuel oils and gas and, in part, to the burning of carbon monoxide, which is a product of the processing operations.

The emission of nitrogen oxides from iron and steelmaking and processing equipment does not appear to have been extensively investigated. However, reasonable estimates can be made by assuming a relationship between known operating temperatures and $NO_x$ concentrations in stack gases (Reference 5-33). This relationship is affected by other variables, such as combustion air preheat temperature and oxygen enrichment of combustion air.

Table 5-15 shows the estimated $NO_x$ concentrations for the major energy-intensive processes and the resulting total annual combustion-related $NO_x$ production based on 1971 steel production energy consumption data (Reference 5-33).

TABLE 5-15. ESTIMATED $NO_x$ EMISSIONS FROM STEEL MILL PROCESSES AND EQUIPMENT (Reference 5-28 except where noted)

| Process or Equipment | Annual Fuel Consumption | | $NO_x$ Emission Factors[a] | | | Annual $NO_x$ Emissions[a] | |
|---|---|---|---|---|---|---|---|
| | PJ | $10^{12}$ Btu | ppm (as measured) | ng/J | lb/$10^6$ Btu | Gg | tons |
| Pelletizing | 29 | 27 | 300 | 180 | 0.42 | 5.1 | 5670 |
| Sintering | 98 | 93 | 500 (230)[e] | 300 | 0.70 | 29.6 | 32550 |
| Blast Furnace | nd[b] | nd | neg[c] | neg | neg | neg | neg |
| Coke Oven | 225 | 212 | 200 (10-485)[e] | 120 | 0.28 | 26.9 | 24680 |
| Blast Furnace Stove | 212 | 200 | 100 | 60 | 0.14 | 12.6 | 14000 |
| Open Hearth Furnace | 135 | 127 | 600 | 360 | 0.84 | 48.3 | 53340 |
| Basic Oxygen Furnace | nd | nd | nd | nd | nd | nd | nd |
| Soaking Pit and Reheat Furnaces | 541 | 510 | 300 (92)[e] | 180 | 0.42 | 96.4 | 107100 |
| Heat Treating and Finishing | 64 | 60 | 200 | 120 | 0.28 | 7.6 | 8400 |
| Electric Furnaces[d] | nd | nd | 6-25 | nd | nd | .02-.09 | 26-110 |

Notes: [a]expressed as $NO_2$

[b]nd = no data

[c]neg = negligible emissions

[d]Reference 5-75

[e]American Iron and Steel Institute test data provided by Dr. Walter Jackson (U.S. Steel), (Reference 5-74)

Other test results provided by the American Iron and Steel Institute (Reference 5-74) indicate different emission factors as shown in parentheses in Table 5-15. The emission levels for the coke ovens are the result of three separate tests (10, 186, and 485 ppm).

Results of recent tests reported by Hunter, et al. (Reference 5-34) are summarized in Table 5-16. The open hearth furnace was tested while operating on natural gas and Number 6 fuel oil (60/40). The wide fluctuations in $NO_x$ and CO observed as various operations were performed are shown in Figure 5-18. Large changes in excess air occurred as the operators opened doors to look at the steel and to add material or adjust fuel flow to change heating rate. $NO_x$ emissions varied from 100 to 3500 ppm and averaged about 1800 ppm or about 950 ng/J (2.2 lb/MMBtu). $NO_x$ increased somewhat linearly with excess $O_2$. Particulate emissions were 2200 ng/J (5.02 lbMMBtu), measured upstream of the precipitator. Following baseline tests the furnace was overhauled to repair refractory and fix leaks. A second test cycle was observed on the repaired furnace and the average $NO_x$ was 1094 ng/J (1250 ppm), a reduction of about 40 percent. During baseline tests, $NO_x$ frequently exceeded 2000 ppm but with the excess air controlled, excursions over 2000 ppm occurred only twice.

One steel billet reheat furnace was tested while firing natural gas at heat rates between 13 and 30 MW. Baseline $NO_x$ emissions at 24 MW (82 million Btu/hr) were 56 ng/J (110 ppm) and particulates were 17 ng/J (0.04 lb/MMBtu). This furnace had two heating zones with 13 and 14 burners, respectively. The row with 13 burners released about 80 percent of the heat input. Combustion modifications included reduced excess air, resulting in a 24 percent $NO_x$ reduction, and burners out of service which produced a 43 percent $NO_x$ reduction with three burners out of service in the row of 13 burners.

One steel ingot soaking pit was tested (site 16/2) while firing natural gas at about 2.9 MW (10 MMBtu/hr) through a single burner. Baseline $NO_x$ emissions at 2 MW were 52 ng/J (101 ppm). Reduction of excess air reduced $NO_x$ by 69 percent with no adverse effect on the steel.

### 5.3.3 Glass Manufacture

#### 5.3.3.1 Process Description

The glass manufacturing industry is made up of several basically different types of operations. They are:

TABLE 5-16. EFFECTS OF $NO_x$ CONTROLS ON STEEL INDUSTRY $NO_x$ EMISSIONS (Reference 5-34)

| Device Type | Fuel | Average Baseline $NO_x$ | | Max. % Reduction | Combustion Modification |
|---|---|---|---|---|---|
| | | ng/J | ppm @ 3% $O_2$ | | |
| Steel Open Hearth Furnace | Nat. Gas + No. 6 Oil | 1094 | 2070 | 40 | Low $O_2$ |
| Steel Reheat Furnace | Nat. Gas | 56 | 110 | 43 | 3/27 BOOS |
| Steel Soaking Pit | Nat. Gas | 52 | 101 | 69 | Low $O_2$ |

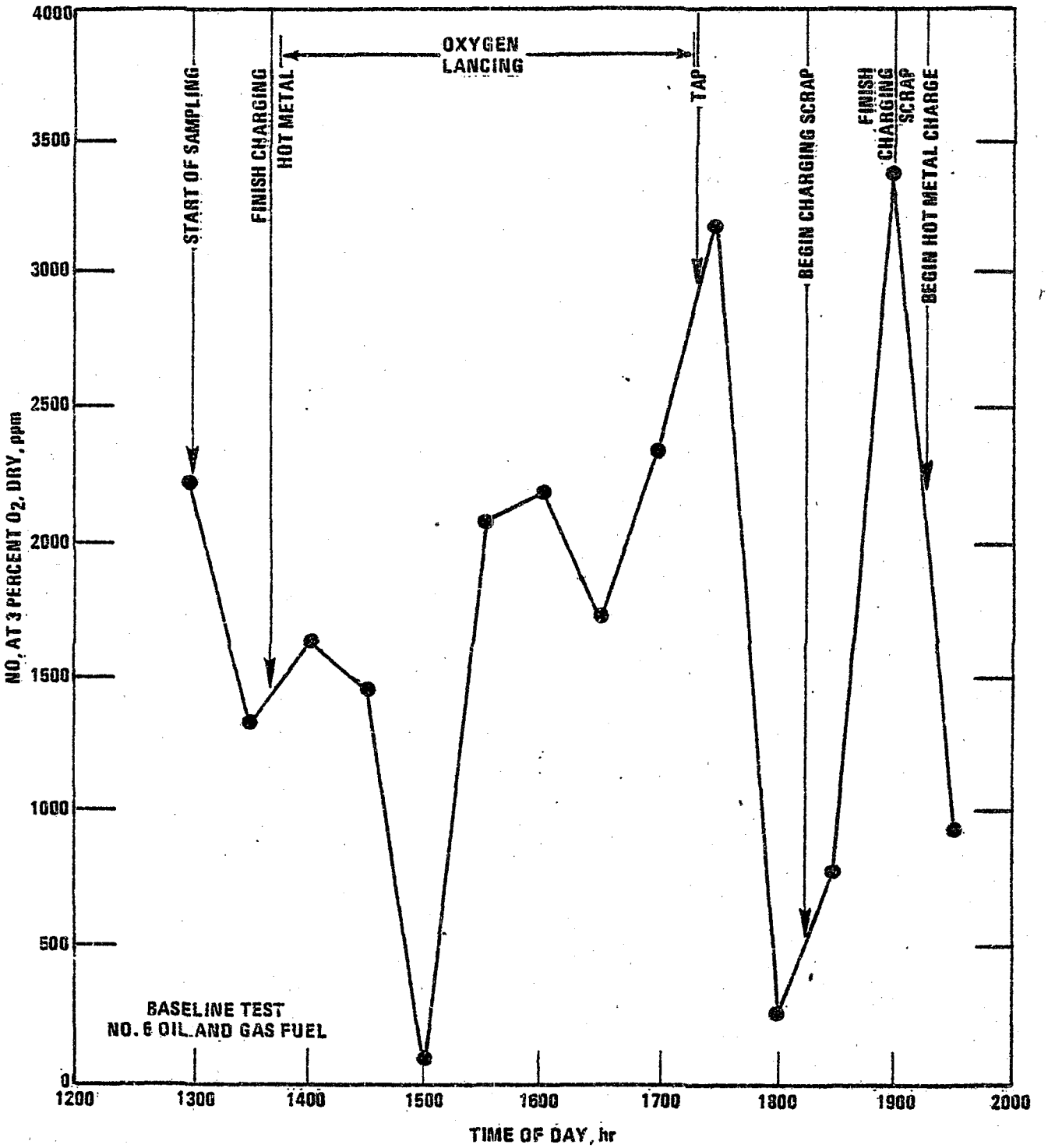


Figure 5-18. $NO_x$ emissions as a function of time for an open hearth furnace (Reference 5-34).

1. Glass container manufacture

2. Fiberglass manufacture

3. Flat glass manufacture

4. Specialty glass manufacture

The largest type is the glass container industry, which produces about 45 percent of the total amount of glass (by weight) produced by the entire industry.

While the specific processes used within each segment of the industry vary according to the product being manufactured, glass manufacturing involves three major energy-consuming processes: melting the raw materials, refining the molten glass, and finishing the formed products. Typically, about 80 percent of the energy consumed by the glass industry is for melting and refining, 15 percent is for finishing, and 5 percent is for mechanical drives and conveyors. The primary differences in processes used among the various segments occur in the refining and finishing operations.

The raw materials used in glass manufacture consist primarily of silica sand, soda ash, limestone, and cullet (crushed waste glass). In the production of window and plate glass, for example, temperatures in the range of 1,783K to 1,838K (2,750F to 2,850F) may be required to melt these raw materials into a viscous liquid.

The furnaces used are of the pot type if only a few tons of a specialty glass are to be produced, or of the continuous tank type for larger quantities. By far the larger amount of glass is melted in furnaces, and only these will be considered in connection with $NO_x$ control.

Continuous reverberatory furnaces have a holding capacity of up to 1.27 Gg (1,400 tons) and a daily output of as much as 270 Mg (300 tons). Reverberatory furnaces in this industry are broken into two classifications according to the firing arrangement used: end-port and side-port melters. In the operation of a side-port-fired furnace, the preheated combustion air mixes with the fuel in the port, resulting in a flame that burns over the glass surface. The products of combustion exit via the opposite port, down through the checkerbricks, and out through the reversing valve to the exhaust stack. Typically, there are several ports situated along each side of the furnace. In contrast, there are only two ports in an end-port-fired furnace, located on the rear wall of the furnace. The flame is ignited in one port, travels out over the glass toward the bridgewall, and "horseshoes" back to the exit port — the other port in the rear of the furnace. In both types of furnaces, the firing pattern is reversed every 20 to 30 minutes, depending upon the specific furnace. During this reversal period, the flame is extinguished, the furnace is purged of combustion gases by reversing the flow of combustion air and exhaust gases passing through the reversal valve, and

combustion is then reestablished in what was previously the exhaust port. Both types of melters are operated continuously throughout a campaign that normally lasts 4 to 5 years, at sustained temperatures up to 1,867K (2,900F).

In addition to the reverberatory-type melters, day tanks, unit melters, and pot melters are used, mostly in the pressed and blown glass industry. Many of these melters are batch-type, as opposed to continuous, resulting in a substantial reduction in fuel-utilization efficiency. Much of the fuel that is wasted is due to the antiquated methods of operation and associated equipment used with these melters (Reference 5-33).

The combustion gases, on leaving the melting zone, retain a considerable amount of heat. This is reclaimed in a regenerator or brickchecker chamber. When the firing cycle is reversed, combustion air is preheated by being passed through the brick work. Preheating saves fuel but increases the flame temperature which promotes $NO_x$ formation.

Coal is not used in glass melting. Since molten glass is conductive, electrical heating is used as a booster to supplement fuel firing whenever technically and economically practical. Gas and, to a lesser extent, fuel oil are the preferred fuels.

5.3.3.2 Emissions

The flue gas from glass-melting furnaces is the major source of $NO_x$ emission in the glass industry. The operation of these furnaces is similar to that of open hearth furnaces used in steelmaking; regenerative checkerwork sets absorb heat from the combustion gases for subsequent release to the incoming combustion air. This is accomplished by a reversing valve which puts each checkerwork set through its heating and cooling cycle in turn. The sequence of intense high-temperature combustion and quenching in the checkerwork sometimes raises $NO_x$ emissions to levels higher than those experienced in a steam boiler of equivalent heat release. For example, during a recently completed experimental program, $NO_x$ emissions were measured during a complete firing cycle of a glass melter. $NO_x$ emissions were highest at the beginning of the firing cycle and then, as the cycle continued, decreased by about 30 percent. At the beginning of the firing cycle, the combustion air is preheated to a higher temperature, which results in a hotter flame than at the end of the cycle when the checkerbrick and hence the air have cooled considerably. Other major factors in $NO_x$ formation in a glass melter, such as flame velocity and recirculation patterns of flue gases, are being studied.

Table 5-17 summarizes the emissions from several glass melters as measured by a number of investigators.

TABLE 5-17. $NO_x$ EMISSIONS FROM GLASS MELTING FURNACES

| Investigator | $NO_x$ (ppm as measured) | Comments |
|---|---|---|
| IGT (Reference 5-79) | 490 to 700 | gas fired; 8% excess air |
| Ryder and McMackin (Reference 5-80) | 450 to 600 | 25% to 45% excess air |
| Stockham (Reference 5-76) | 340 | excess air unknown |
| Mills, et. al., (Reference 5-77) | 435 to 1320 (average of 570) | — |
| Danielson (Reference 5-78) | 137<br>725 | amber glass melting<br>flint glass melting |

5.3.3.3 Control Techniques

According to representatives of the glass industry, the efforts of the industry to reduce air pollutant emissions are severely hampered by the variations in regulations that exist from state to state. This lack of uniformity requires that different solutions to the problem be sought, depending on the location of the specific plant. This, in turn, adds substantially to the cost of pollution control. In addition, not only are the regulations variable from one location to another, but these regulations are constantly changing. As a result, very few air pollution control equipment installations have been made on glass furnaces, and there is very little data available on the effectiveness and cost of these devices.

In general, $SO_x$, $NO_x$, and particulates are the primary air pollutants from the glass manufacturing processes. The concern is primarily with the melting process because this is the largest energy consumer and the major contributor to air pollutant emissions. The major pollution problem in the combustion process is $NO_x$ emissions.

While the formation of $NO_x$ in the combustion process is not entirely understood, it is clear that the goals of reducing $NO_x$ emissions and reducing energy consumption are seemingly at odds. $NO_x$ formation is a temperature-related phenomenon; as temperature increases, $NO_x$ emissions increase. On the other hand, increasing available heat to a process may result in increases in efficiency and in temperature, which in turn increase $NO_x$ emissions. Analysis of the process modifications under consideration in the glass industry shows that there is a possibility of increasing $NO_x$ emissions. If the implementation is carried out properly, however, this need not occur.

Six recommended modification programs are listed in Table 5-18. The order of listing is according to programs that afford the greatest potential for solving the problems in the shortest period of time. The table also presents estimates of improvements that may be obtained, where such estimates can reasonably be made (Reference 5-33). Cost data for these programs are not available at this time. Two of the six recommendations are currently being pursued by EPA/IERL-Cincinnati.

5.3.4 Cement Manufacture

5.3.4.1 Process Description

The cement industry includes all establishments engaged in the manufacture of hydraulic cement (generic name: portland cement), masonry, natural, and pozzuolana cements. This discussion is limited to the production of portland cement because it accounts for 95 percent of the total

TABLE 5-18. RECOMMENDED PROGRAMS FOR REDUCING EMISSIONS AND ENERGY CONSUMPTION IN THE GLASS INDUSTRY (REFERENCE 5-33)

| Program | Expected Improvements in Energy Consumption, % | Expected Improvements in Air Pollutant Emissions |
|---|---|---|
| 1. Develop current emission data | — | — |
| 2. Raw batch pretreatment — i.e., preheating and agglomeration | 25-50 | 25% to 50% potential $NO_x$ reduction, may reduce particulate in form of batch carry-over |
| 3. Oxygen enrichment | 5-15 | No effect on $NO_x$, $SO_x$, or particulates |
| 4. Augmentation of heat transfer from flames — e.g., burner positioning | 10-20 | Proportional $NO_x$ reduction |
| 5. Use of low-temperature heat for driving compressors | — | — |
| 6. Development of submerged combustion process | 50 | Will substantially reduce $NO_x$ emissions |

cement manufactured in the United States, with the remaining 5 percent split among the other types.

Raw materials used in the manufacture of portland cement consist of limestone, chalk or marl, and seashells. These are combined with either clay, shale, slate, blast furnace slag, iron ore, or silica sand. The end product is a chemical combination of calcium, silicon, aluminum, iron, and other trace materials. The raw materials are first ground and blended together. Depending upon which of the two processes is used, water may be added during blending (the wet process) or the ingredients can be mixed on a dry basis (the dry process). In general, the moisture content of the raw materials determines the process used. If the moisture content is greater than 18 percent, by weight, the wet process will be used. If the moisture content is less than 18 percent, the dry process will be used. The next step is the calcining or burning of the mixed raw material in a rotary kiln. During this step, the material is heated to approximately 1,755K (2,700F) and transformed into clinker, which has different chemical and physical properties than the raw materials had initially. The clinker is discharged from the kiln and cooled. The last step is to grind the clinker to the desired fineness and add gypsum to control the setting time of the concrete (Reference 5-33).

5.3.4.2 Emissions

The major air pollutant emission problem in the manufacture of portland cement is particulates, which occur in all phases of cement manufacturing from crushing and raw material storage to clinker production, clinker grinding, storage, and packaging. However, emissions also include the products of combustion of the fuel used in the rotary kilns and drying operations; these emissions are typically $NO_x$ and small amounts of $SO_x$. For both the wet and dry kiln processes, the limited data shows that nitrogen oxides are emitted at a rate of about 1.3 g per kg (2.6 lb per ton) of cement produced.

The largest source of emissions in cement plants is the kiln operation. At present, about 56 percent of the cement kilns in operation use the wet process, and 44 percent use the dry process. Based on this information, estimates of total $NO_x$ emissions from cement plants in 1972 are 42.7 Gg ($4.7 \times 10^4$ tons) for the dry process and 54.5 Gg ($6 \times 10^4$ tons) for the wet process. These estimates, because of a lack of data, assume the use of no controls by the industry. Without an inventory of control equipment in use, they cannot be refined.

Future efficiency-improving process modifications that increase flame temperature without improving heat transfer to the process load will almost certainly result in increased $NO_x$ emissions.

Conversely, adequate removal of the additional heat resulting from the applicable process modifications should maintain $NO_x$ emissions at their current level.

Of the process modifications deemed to be near-term, only the use of oxygen enrichment has any great potential of increasing air pollutant emissions, primarily $NO_x$. In some applications in other industries, for example, glass melting, oxygen enrichment can be used without increasing $NO_x$ emissions. However, due to the different type of load in the cement industry and the different patterns of heat transfer, it is suspected that $NO_x$ would increase with the implementation of oxygen enrichment (Reference 5-33).

5.3.4.3 Control Techniques

There is very little information in the literature regarding commercial installation of equipment for removing $NO_x$ from kiln waste gas or of modifications to kiln operations to reduce $NO_x$ production. Water scrubbing is sometimes used for particulate removal from waste gas from lime kilns. In this operation, the gas contacts a slurry of calcium hydroxide, which should remove a 50/50 mixture of NO and $NO_2$ and reduce $NO_x$ up to 20 percent. Flue gas recirculation, which is used to control temperature in some lime kilns, should reduce $NO_x$ emissions by lowering flame temperature.

Reference 5-34 reports $NO_x$ emission test results for both a dry process kiln and a wet process kiln. The dry process kiln was tested at full capacity while firing a 68/32 mixture of coke and natural gas. Data for the same kiln firing natural gas and oil separately were also available for comparison. Emissions of $NO_x$ while firing natural gas were 1,050 to 1,800 ng/J (1680 to 2900 ppm). Operation on oil resulted in a 60 percent reduction (400-710 ng/J). Operation on combined coke and natural gas produced emissions of 655 to 710 ng/J, a 50 percent reduction.

Lower $NO_x$ emissions on solid and liquid fuels compared to gas are attributed to the highly adiabatic nature of the process. Many cement kilns are currently being converted from gas to solid fuels. This conversion will be beneficial in reducing $NO_x$ and could be pursued as an $NO_x$ control method that is consistent with the reduction of industrial gas consumption.

The wet process cement kiln was tested only while firing natural gas and had baseline emissions of 1319 ng/J (2250 ppm). Combustion modifications investigated included variation of combustion air inlet temperature and excess oxygen. Increase of combustion air temperature from 644K (700F) to 767K (920F) increased NO emissions to 1518 ng/J, and 15 percent increase. Reduction of excess oxygen at baseline air temperature reduced $NO_x$ to 846 ng/J, a 36 percent reduction. The independent reductions of either excess air or air temperature caused unacceptable reduction of kiln temperature that can result in a process upset. The NO emissions were found to be a strong

function of kiln temperature, as shown in Figure 5-19. It was found that simultaneous reduction of excess air and increase in air temperature could produce a reduction in NO of about 14 percent while maintaining kiln temperature.

Electric heating eliminates all the pollutants associated with combustion sources, but its use in kiln operation is very limited. Another means of emission control in kiln operation is the choice of kiln type. Some $NO_x$ reduction in limestone calcining is obtained by using a vertical instead of a rotary kiln. The mechanism of operation is such that heat transfer to the load is very high, and peak temperatures are lower than required to obtain the formation of $NO_x$ in large amounts.

### 5.3.5 Coal Preparation Plants

Coal in its natural state contains impurities such as sulfur, clay, rock, shale, and other inorganic materials, generally called ash. Coal mining adds more impurities. Coal preparation plants serve to remove these impurities. Coal cleaning processes utilized by coal preparation plants may be wet, dry, or a combination of both. Wet processes are a minor source of oxides of nitrogen.

After the coal is wetted by the cleaning process, primary drying is done mechanically by dewatering screens followed by centrifugal driers. When lower surface moisture is desired (3 to 6 percent) with finer coal sizes, secondary drying is required. Such low moisture levels can best be accomplished by thermal drying. It appears that new coal preparation plants that install thermal dryers will use a fluidized-bed type.

In the fluidized bed drier, hot combustion gases from a coal-fired furnace are passed upward through a moving bed of finely-divided wet coal. As the bed fluidizes, the coal is dried as the fine particles come into intimate contact with the hot gases.

The major pollutant evolved from the thermal dryer is particulate. Well-controlled thermal driers emit only minor quantities of $NO_x$. Concentrations of 40 to 70 ppm (0.16 to 0.28 kg/MJ, or 0.39 to 0.68 lb/$10^6$ Btu) have been measured (Reference 5-81). These emission rates are below the NSPS of 300 ng/J (0.7 lb/$10^6$ Btu) for large steam generators. In any case, no $NO_x$ standards have yet been proposed since the thermal dryer capacities are generally less than the smallest power plants required to control $NO_x$ emissions: 73.2 MW, or 250 x $10^6$ Btu/hr (Reference 5-81).

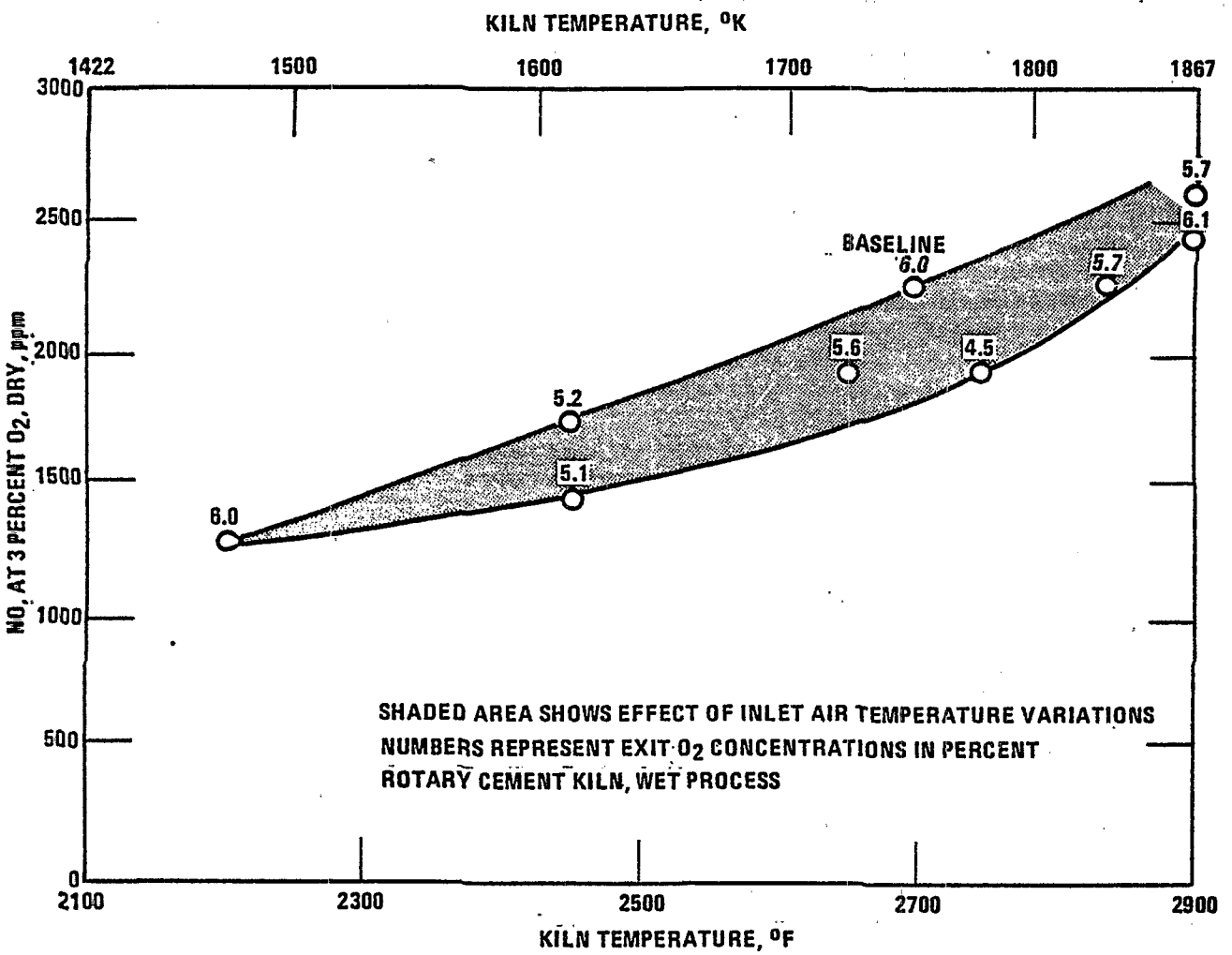


Figure 5-19. The effect of cement kiln temperature on $NO_x$ emissions (Reference 5-34).

## REFERENCES FOR SECTION 5


5-1 Castaldini, C., et al., "Combustion Modification Controls for Residential and Commercial Heating Systems: Volume I. Environmental Assessment," EPA-600/7-81-123a, July 1981.

5-2 Hall, R. E., J. H. Wasser, and E. E. Berkau, "A Study of Air Pollutant Emissions from Residential Heating Systems," EPA-650/2-74-003, January 1974.

5-3 Barrett, E. R., S. E. Miller, and D. W. Locklin, "Field Investigation of Emissions from Combustion Equipment for Space Heating," Battelle-Columbus Laboratories, EPA R2-73-084a, June 1973.

5-4 Hall, R. E., et al., "Status of EPA's Combustion Research Program for Residential Heating Equipment," presented at the 67th APCA Annual Meeting, June 1974.

5-5 U.S. Environmental Protection Agency, "Compilation of Air Pollutant Emission Factors," AP-42, February 1980.

5-6 Allen, J. M., "Control of Emissions from Residential Wood Combustion by Combustion Modification" Proceedings of the Joint Symposium on Stationary Combustion $NO_x$ Control, Vol. III., IERL-RTP-1085, October 1980.

5-7 Locklin, D. W. and R. E. Barrett, "Guidelines for Residential Oil Burner Adjustments," EPA-600/2-75-069a, October 1975.

5-8 Locklin, D. W. and R. E. Barrett, "Guidelines for Burner Adjustments of Commercial Oil-Fired Boilers," EPA-600/2-76-088, March 1976.

5-9 DeWerth, D. W., R. L. Himmel, and D. W. Locklin, "Guidelines for Adjustment of Atmospheric Gas Burners for Residential and Commercial Space Heating and Water Heating," EPA-600/8-79-005, February 1979.

5-10 Thrasher, W. H. and D. W. DeWerth, "Evaluation of the Pollutant Emissions from Gas- Fired Air Furnaces," Research Report No. 1503, American Gas Association, Cleveland Laboratories, Cleveland, Ohio, May 1975 as cited in Okuda, A. S. and L. P. Combs, "Design Optimization and Field Verification of an Integrated Residential Furnace - Phase 1," Rockwell International, Rocketdyne Division, EPA-600/7-79-037a, February 1979.

5-11 Kalika, P. W., G. T. Brookman, and J. E. Yocum, "A Study on Measuring the Environmental Impact of Domestic Gas-Fired Heating Systems," Final Report, The Research Corporation of New England, June 1974 as cited in Okuda, A. S. and L. P. Combs, "Design Optimization and Field Verification of an Integrated Residential Furnace - Phase 1," Rockwell International, Rocketdyne Division, EPA-600/7-79-037a, February 1979.

5-12 De Angelia, D. G. and R. B. Reznik, "Source Assessment: Residential Combustion of Coal," Monsanto Research Corporation, EPA-600/2-79-019a, January 1979.

5-13 Martin, G. B., "Evaluation of a Prototype Surface Combustion Furnace," Proceedings of the Second Stationary Source Combustion Symposium, Volume III, EPA-600/7-77-073c, NTIS-PB 271 757, July 1977.

5-14 Personal communication with Chuck Mueller, Amana, Inc., Amana, IO, April 14, 1979 as cited in Reference 5-2.

5-15 Hall, R. E., et al., "Study of Air Pollutant Emissions from Residential Heating Systems," EPA-650/2-74-003, NTIS-PB 229697, January 1974.

5-16 Dickerson, R. A., and A. S. Okuda, "Design of an Optimum Distillate Oil Burner for Control of Pollutant Emissions," EPA-640/2-74-047, June 1974.

5-17 Comb, L. P. and A. S. Okuda, "Residential Oil Furnace System Optimization - Phase I," Rocketdyne Division, Rockwell International, EPA-600/2-76-038, February 1976.

5-18 National Petroleum News, January 1975, pp. 34-35.

5-19 Personal Communication, Lenney, R. J., Blueray Systems, Inc., Weston, Massachusetts, September 1975.

5-20 Hall, R. E., "The Effect of Water/Distillate Oil Emulsions on Pollutants and Efficiency of Residential and Commercial Heating Systems," Air Pollution Control Association Paper 75-09.4, June 1975.

5-21 Black, R. J., H. L. Hickman, Jr., A. J. Muchick, and R. D. Vaughan, "The National Solid Wastes Survey: An Interim Report," Public Health Service, Environmental Control Administration, Rockville, Maryland, 1968.

5-22 Niessen, W. R., et al., Systems Study of Air Pollution from Municipal Incineration, Report to NAPCA under contract CPA 22-69-23, Arthur D. Little, Inc., Cambridge, Mass., 1970.

5-23 McGraw, J. J. and R. L. Duprey, Compilation of Air Pollutant Emission Factors (Revised), AP-42, EPA, February 1972.

5-24 Stenburg, R. L., et al., "Field Evaluation of Combustion Air Effects on Atomspheric Emissions from Municipal Incinerators," J. Air Pollution Control Assoc., Vol. 12, pp. 83-89, February 1962.

5-25 Kirsh, J. B., "Sanitary Landfill," In: Elements of Solid Waste Management Training Course Manual Public Health Service, Cincinnati, Ohio, 1968, p. 1-4.

5-26 Fife, J. A., and R. H. Boyer, Jr., "What Price Incineration Air Pollution Control?," Proceedings of 1966 National Incinerator Conference, American Society of Mechanical Engineers, New York, 1966.

5-27 OAQPS Data File of Nationwide Emission, 1971. National Air Data Branch Monitoring and Data Analysis Division, May 1973.

5-28 Chi, C. T., and D. L. Zanders, "Source Assessment: Agricultural Open Burning, State-of-the-Art," EPA-600/2-77-107a, July 1977.

5-29 Air Pollution Problems from Refuse Disposal Operations in the Delaware Valley, Department of Public Health, Air Management Services, Philadelphia, Pa., February 1969.

5-30 Wiley, J. S. et al., "Composting Developments in the U.S.," Combust. Sci. 6(2):5-9, 1965.

5-31 Kurkey, C., "Reducing Emissions from Refuse Disposal," J. Air Pollution Control Assoc., 19: 69-72, February 1969.

5-32 Personal Communication, Mr. Peter L. Cook, Office of Federal Activities, U. S. Environmental Protection Agency, November 1977.

5-33 Ketels, P. A., J. D. Nesbitt, and R. D. Oberle, "A Survey of Emissions Control and Combustion Equipment Data in Industrial Process Heating," Final Report by Institute of Gas Technology for EPA, IGT Project No. 8949, June 1976.

5-34 Hunter, S. C., et al., "Application of Combustion Modifications to Industrial Combustion Equipment, "Proceedings of the Second Stationary Source Combustion Symposium, Vol. III, EPA-600/7-77-0736, July 1977.

5-35 Cantrell, A. Annual Refining Survey. Oil and Gas Journal. 79(13): 110-153. March 30, 1981.

5-36 Hunter, S. C. and S. C. Cherry. (KVB) $NO_x$ Emissions from Petroleum Industry Operations. (Prepared for the American Petroleum Institute.) Washington, D. C. API Publication No. 4311. October 1979.

5-37 Radian Corporation, unpublished data. Source Category Survey Report on $NO_x$ Emissions From Fired Heaters. (Prepared for Emission Standards and Engineering Division, U. S. Environmental Protection Agency, Research Triangle Park, North Carolina.) DCN 81-231-372-19-04, EPA Contract No. 68-02-3058. July 1981.

5-38 Cherry, S. C. and S. C. Hunter. (KVB) Cost and Cost Effectiveness of $NO_x$ Control in Petroleum Industry Operations. (Prepared for the American Petroleum Institute.) Washington, D. C. API Publication No. 4331. October 1980.

5-39 Radian Corporation. Assessment of Atmospheric Emissions From Petroleum Refining: Volume 5, Appendix F. (Prepared for the U. S. Environmental Protection Agency.) Publication No. EPA-600/2-80-075E. Research Triangle Park, N.C. July 1980.

5-40 Murcia, A. A., et al., Add Flexibility to FCC's. Hydrocarbon Processing. 58:134. September 1979.

5-41 Production by the U. S. Chemical Industry. Chemical and Engineering News. 59(23): 33-35. June 8, 1981.

5-42 Hoover, J. R., J. R. Blacksmith, and P. W. Spaite. (Radian Corporation) Energy Use Patterns and Environmental Implications of Direct-Fired Industrial Processes. (Prepared for U. S. Environmental Protection Agency.) Cincinnati, Ohio. EPA Contract No. 68-01-4136. August 1980.

5-43 Parsons, T. B., C. M. Thompson, and G. E. Wilkins. (Radian Corporation) Industrial Process Profiles for Environmental Use: Chapter 5. Basic Petrochemicals Industry. (Prepared for U. S. Environmental Protection Agency.) Washington, D. C. EPA-600/2-77-023e. January 1977.

5-44 Kent, J. A. (ed.) Riegel's Handbook of Industrial Chemistry. Seventh edition. New York. Van Nostrand Reinhold Company, 1974.

5-45 1979 Petrochemical Handbook Issue. Hydrocarbon Processing. 59:154. November 1979.

5-46 Considine, D. M. (ed.). Chemical and Process Technology Encyclopedia. New York, McGraw-Hill Book Company. 1974.

5-47 Berman, H. L. Fired Heaters - II: Construction materials, mechanical features, performance monitoring. Chemical Engineering. 85(17):89. July 31, 1978.

5-48 Smith, T. M. Applying Ceramic Fiber Furnace Linings. Hydrocarbon Processing. 60:169-172. April 1981.

5-49 Berman, H. L. Fired Heaters - I: Finding the Basic Design for Your Application. Chemical Engineering. 85(14):99. June 19, 1978.

5-50 Safety in High-Temp Heat Transfer Fluid Systems. Chemical Engineering. 88(9): 14-15. May 4, 1981.

5-51 Ayraud, S. L., and R. J. Schreiber. (Aerotherm/Acurex) Refinery Heater Screening Study. (Prepared for U. S. Environmental Protection Agency.) Research Triangle Park, North Carolina. Publication No. EPA-450/3-79-007. March 1979.

5-52 Berman, H. L. Fired Heater III: How Combustion Conditions Influence Design and Operation. Chemical Engineering. 85(18): 138.

5-53 Evans, F. L. Equipment Design Handbook for Refineries and Chemical Plants: Volume 2. Houston, Gulf Publishing Company, 1980. p. 9.

5-54 Goyal, O. P. Guidelines Help Combustion Engineers. Hydrocarbon Processing. 59: 209. November 1980.

5-55 Berman, H. L. Fired Heaters - IV: How to reduce your fuel bill. Chemical Engineering. 85(20): 166-7. September 11, 1978.

5-56 Reed, R. D. Furnace Operations. Houston, Gulf Publishing Company, 1976.

5-57 Waterland, L. R., et al., (Acurex/Aerotherm) Environmental Assessment of Stationary Source $NO_x$ Control Technologies: Second Annual Report. (Prepared for U. S. Environmental Protection Agency.) Research Triangle Park, North Carolina. Publication No. EPA-600/7-79-147.

5-58 Martin, R. R. Burner Design Parameters for Flue Gas $NO_x$ Control. John Zink Technical Publication No. 4010. Tulsa, Oklahoma, John Zink Company, 1981.

5-59 Coe, W. W. How Burners Influence Combustion. Hydrocarbon Processing. 60: 181. May 1981.

5-60 Cox, N. D., and W. Paul Jensen. Improving Fired Heaters Saves Fuel. Oil and Gas Journal. 77 (49): 73. December 3, 1979.

5-61 Radian Corporation, unpublished data. Interim Data Collection and Analysis for Development of New Source Performance Standards for $NO_x$ Emissions from Fired Heaters. (Prepared for Emission Standards and Engineering Division, U. S. Environmental Protection Agency.) Research Triangle Park, North Carolina. DCN 82-231-372-19-15. Contract No. 68-02-3058. May 1982.

5-62 Tidona, R. J., W. A. Carter, and H. J. Buening. (KVB) Refinery Process Heater $NO_x$ Control Using Staged Combustion Lances. (Prepared for U. S. Environmental Protection Agency.) Research Triangle Park, North Carolina. EPA Contract No. 68-02-2645. November 1981.

5-63 Tidona, R. J., H. J. Buening, and J. R. Hart. (IVB) Emissions From Refinery Process Heaters Equipped with Low-$NO_x$ Burners. Publication No. EPA-600/7-81-169. Research Triangle Park, North Carolina. October 1981.

5-64 Chapman, Kirk S. (Coen Company, Inc.) $NO_x$ Reduction on Process Heaters With a Low $NO_x$ Burner. Presented at the 72nd Annual Meeting of the Air Pollution Control Association. Cincinnati, Ohio. June 24-29, 1979.

5-65 State of California Air Resources Board. Public Meeting to Consider a Suggested Control Measure for the Control of Emissions of Oxides of Nitrogen from Boilers and Process Heaters in Refineries. (Prepared by the staff of the South Coast Air Quality Management District and Stationary Source Control Division Air Resources Board.) October 1981.

5-66 State of California Air Resources Board. A Suggested Control Measure for Emissions of Oxides of Nitrogen from Boilers and Process Heaters in Refineries. (Prepared by the staff of the South Coast Air Quality Management District and Stationary Source Control Division Air Resources Board.) March 1982.

5-67 Schultz, E. J., L. J. Hellenbrand, and R. B. Engdahl, "Source Sampling of Fluid Catalytic Cracking Plant of Standard Oil of California, Richmond, California," Batelle-Columbus Labs, July 1972.

5-68 Schultz, E. J., L. J. Hellenbrand, and R. B. Engdahl, "Source Sampling of Fluid Catalytic Cracking, CO Boiler and Electrostatic Precipitators at the Atlantic Richfield Company, Houston, Texas," Battelle-Columbus Labs, July 1972.

5-69 Shea, E. P., "Source Testing, Standard Oil Company, Richmond, California," Midwest Research Institute, Kansas City, Missouri, 1972.

5-70 Cowherd, C., "Source Testing, Standard Oil of California Company, El Segundo, California," Midwest Research Institute, Kansas City, Missouri, 1972.

5-71 Shea, E. P., "Source Testing, Atlantic Richfield Company, Wilmington, California," Midwest Research Institute, Kansas City, Missouri, January 1972.

5-72 McGannon, H. E., The Making, Shaping and Treating of Steel, 8th ed., Pittsburgh, United States Steel Co., 1964.

5-73 Russel, C. C., "Carbonization." In: Kirk-Othmer Encyclopedia of Chemical Technology, Standen, A. (ed.), Vol. 4, 2d ed., New York, Interscience Publishers, Inc., 1964, p. 400-423.

5-74 Personal communication, Dr. Walter Jackson, U. S. Steel, November 1977.

5-75 Personal Communication, Mr. Andrew Trenholm of the Office of Air Quality Planning and Standards, U. S. Environmental Protection Agency, Durham, North Carolina, May 1976.

5-76 Stockham, J. D., "The Composition of Glass Furnace Emission," presented at the 63rd Annual meeting of the Air Pollution Control Association, St. Louis, June 1970.

5-77 Mills, J. L., et al., "Emissions of Oxides of Nitrogen from Stationary Sources in Los Angeles County; Oxides of Nitrogen Emitted by Medium and Large Sources," Joint District, Federal, State, and Industry Project, Los Angeles County Air Pollution Control District, Los Angeles, Calif., Report Number 3, April 1962.

5-78 Air Pollution Engineering Manual, Danielson, J. A. (ed.). National Center for Air Pollution Control, Cincinnati, Ohio, PHS Publication No. 999-AP-40.

5-79 Nesbitt, J. D., D. H. Larson, and M. Fejer, "Improving Natural Gas Utilization in a Continuous End Port Glass-Melting Furnace," In: Proceedings of the Second Conference on Natural Gas Research and Technology, Session IV, Paper 9, Chicago, 1972.

5-80 Ryder, R. J., and J. J. McMackin, "Some Factors Affecting Stack Emissions from a Glass Container Furnace," Glass Ind., 50, June-July 1969.

5-81 "Background Information for Standards of Performance: Coal Preparation Plants; Volume 1: Proposed Standards," EPA 450/2-74-021a, October 1974.

## SECTION 6

## NONCOMBUSTION PROCESSES

The problem of $NO_x$ emissions has been researched in the chemical industry more intensively than anywhere else because it may represent the loss of a valuable raw material. The following sections of this report discuss commercial processes developed for $NO_x$ control in the manufacture and uses of nitric acid.

The $NO_x$ released in vent gases from the manufacture and industrial uses of nitric acid, differs markedly from that emitted from a combustion flue gas in concentration, total amount, and the ratio of $NO_2$ and NO present. The $NO_x$-containing chemical gas is commonly a process stream which must be recycled with maximum $NO_x$ recovery in order to have an economical process. Vent gas is released only because it is too impure to recycle or too low in concentration for economic recovery. The economic limit with a pure gas, as in nitric acid manufacture, is about 0.1 to 0.3 percent $NO_x$, or 1,000 to 3,000 ppm. The limit is higher in organic nitrations, such as the manufacture of nitroglycerine, where $NO_x$ content of the vent gas may approach 1 percent $NO_x$, or 10,000 ppm.

The total amount of $NO_x$ emitted from all chemical manufacturing is about 1.7 percent (203 Gg or $2.2 \times 10^5$ tons/yr) of all $NO_x$ from manmade sources in the United States. These processes present problems only in special local areas. The problems have been most serious in military ordance works, which manufacture large volumes of nitric acid and use it in organic nitrations. A single plant like the Volunteer Ordance Works has produced, for example, emissions of $NO_x$ equal to all nonmilitary uses of nitric acid in the United States.

A high ratio of $NO_2$/NO at high concentrations causes the gases to be visible as a brownish plume. The visibility limit depends on the total amount of $NO_2$ present in the gas volume or layer observed. A convenient rule of thumb is that a stack plume or air layer will have a visible brown color when the $NO_2$ concentration exceeds 6,100 ppm divided by the stack diameter in centimeters (Reference 6-1). This means that the threshold of visibility for a 5 cm-diameter stack is about 1,200 ppm of $NO_2$ and for a 30 cm-diameter stack, 200 ppm of $NO_2$ (or 2,000 ppm of $NO_x$ at a 1:10 ratio of $NO_2$:NO).

The distinction between $NO_2$ concentrations and total amount can be quite important in chemical vent gases, since a short burst of $NO_2$ at 10,000 ppm may be visible but less hazardous than many times as much $NO_x$ emitted from a large stack at a lower concentration. The total amount in a short, concentrated emission may be too small to have a detectable effect on $NO_x$ levels in ambient air.

A large amount of research with varying degrees of success has been carried out on the development of processes for the removal of $NO_x$ from the off-gas resulting from the manufacture and uses of nitric acid. The abatement processes are discussed in detail in Section 6.1.3.

## 6.1 NITRIC ACID MANUFACTURE

Nitric acid plants are divided into two types: those that make dilute nitric acid (50-68 percent nitric acid) and those that make strong nitric acid (over 95 percent nitric). Nitric acid and water form an azeotropic (constant-boiling) mixture at about 58 percent nitric acid content; this is the limiting factor in the nitric acid concentration available through distillation and absorption methods. The acid is concentrated to 98 percent in an acid concentration unit using extractive distillation. The direct process for making strong nitric acid usually depends on direct formation of nitric acid in an autoclave where nitrogen oxides react with oxygen and water to form nitric acid. Most (> 95 percent) nitric acid plants presently in operation are of the first kind.

### 6.1.1 Dilute Nitric Acid Manufacturing Processes

Nitric acid in the United States is made by the catalytic oxidation of ammonia. Air and ammonia are preheated, mixed, and passed over a catalyst, usually a platinum-rhodium complex. The following exothermic reaction occurs:

$$4NH_3 + 5O_2 \rightarrow 4NO + 6H_2O \qquad (\Delta H = -906 \text{ J/mole}) \tag{6-1}$$

The stream is cooled to 311K (100F) or less, and the NO then reacts with oxygen to form nitrogen dioxide and its liquid dimer, nitrogen tetroxide.

$$2NO + O2 \rightarrow 2\,NO_2 \rightleftarrows N_2O_4 \qquad (\Delta H = -113 \text{ J/mole}) \tag{6-2}$$

The liquid and gas then enter an absorption tower. Air is directed to the bottom of the tower and water to the top. The $NO_2$ (or $N_2O_4$) reacts with water to form nitric acid and NO, as follows:

$$3NO_2 + H_2O \rightarrow 2HNO_3 + NO \qquad (6\text{-}3)$$

$$(\Delta H = -135 \text{ J/mole})$$

The formation of 1 mole of NO for each 2 moles of $HNO_3$ makes it necessary to reoxidize NO after each absorption stage since the gas rises up the absorber and limits the level of recovery that can be economically achieved.

Acid product is withdrawn from the bottom of the tower in concentrations of 55 to 65 percent. The air entering the bottom of the tower serves to strip $NO_2$ from the product and to supply oxygen for reoxidizing the NO formed in making nitric acid (Equation 6-3).

The oxidation and absorption operations can be carried out at low pressure (~ 100 kPa, 1 atm), at medium pressure (400 to 800 kPa or 58 to 116 psia) or at high pressure (1000 to 1200 kPa or 145 to 174 psia). Both operations may be at the same pressure or at different pressures.

Before corrosion-resistant materials were developed, the ammonia oxidation and absorption operations were carried out at essentially atmospheric pressure. This also had advantages compared to the higher pressure processes of longer catalyst life (about 6 months), and increased efficiency of ammonia combustion. However, because of the low absorption and NO oxidation rates, much more absorption volume is required, and several large towers are placed in series. Some of these low pressure units are still in operation, but they represent less than 5 percent of the current U.S. nitric acid capacity.

Combination pressure plants carry out the ammonia oxidation process at low or medium pressure and the absorption step at medium or high pressure. The higher combustion temperature and gas velocity at an increased pressure for the oxidation reaction shortens catalyst's lifetime (1 to 2 months) through increased erosion and lowers the ammonia oxidation conversion efficiency (Reference 6-2). Thus lower pressures in the oxidation process are preferred. On the other hand, higher pressures in the absorption tower increase the absorption efficiency and reduce $NO_x$ levels in the tail gas. Of course these advantages must be weighed against the cost of pressure vessels and compressors.

The choice of which combination of pressures to use is very site specific and is governed by the economic trade-offs between the costs of raw materials, energy and equipment, and process efficiency; and local emissions limits. In the 1960's, combination low pressure oxidation/medium pressure absorption and single pressure (400 to 800 kPa) plants were preferred. Since the early 1970's, the trend has been toward medium pressure oxidation/high pressure absorption plants in Europe and single pressure plants (400 to 800 kPa) in the United States.

#### 6.1.1.1 Single Pressure Processes

In the single pressure process, both the oxidation and absorption processes are carried out at the same pressure — either low pressure (100 kPa or ~ 1 atm.) or medium pressure (400 to 800 kPa). Single pressure plants are the most common type. Figure 6-1 is a simplified flow diagram of a single pressure process (Reference 6-3). A medium pressure process will be described below.

Air is compressed, filtered, and preheated to about 573K by passing through a heat exchanger. The air is then mixed with anhydrous ammonia, previously vaporized in a continuous-stream evaporator. The resulting mixture, containing about 10 percent ammonia by volume, is passed through the reactor, which contains a platinum-rhodium (2 to 10 percent rhodium) wire-gauze catalyst (for example, 80-mesh and 75-μm diameter wire, packed in layers of 10 to 30 sheets so that the gas travels downward through the gauze sheets). Catalyst operating temperature is about 1,023K. Contact time with the catalyst is about $3 \times 10^{-4}$ sec.

The hot nitrogen oxides and excess air mixture (about 10 percent nitrogen oxides) from the reactor are partially cooled in a heat exchanger and further cooled in a water cooler. The cooled gas is introduced into a stainless-steel absorption tower with additional air for the further oxidation of nitrous oxide to nitrogen dioxide. Small quantitites of water are added to hydrate the nitrogen dioxide and also to scrub the gases. The overhead gas from the tower is reheated by feed/effluent heat exchangers and then expanded through a power recovery turbine/compressor used to supply the reaction air. The tail gas is then treated by the tail-gas treater for $NO_x$ abatement. The bottom of the tower yields nitric acid of 55 to 65 percent strength.

#### 6.1.1.2 Dual Pressure Processes

In order to obtain the benefits of increased absorption and reduced $NO_x$ emissions from high-pressure absorption, dual-pressure plants are installed. Recent trends favor moderate-pressure oxidation and high-pressure absorption.

A process flow diagram for a dual-pressure plant by Uhde is shown in Figure 6-2. Liquid ammonia is vaporized by steam, heated and filtered before being mixed with air from the air/nitrous oxide compressor at from 300-500 kPa (44 to 72 psia). The ammonia/air mixture is catalytically burned in the reactor with heat recovery by an integral waste heat boiler to generate steam for use in the turbine driven compressor. The combustion gases are further cooled by tail gas heat exchange and water cooling before compression to the absorber pressure of 800-1400 kPa (116 to 203 psia). The

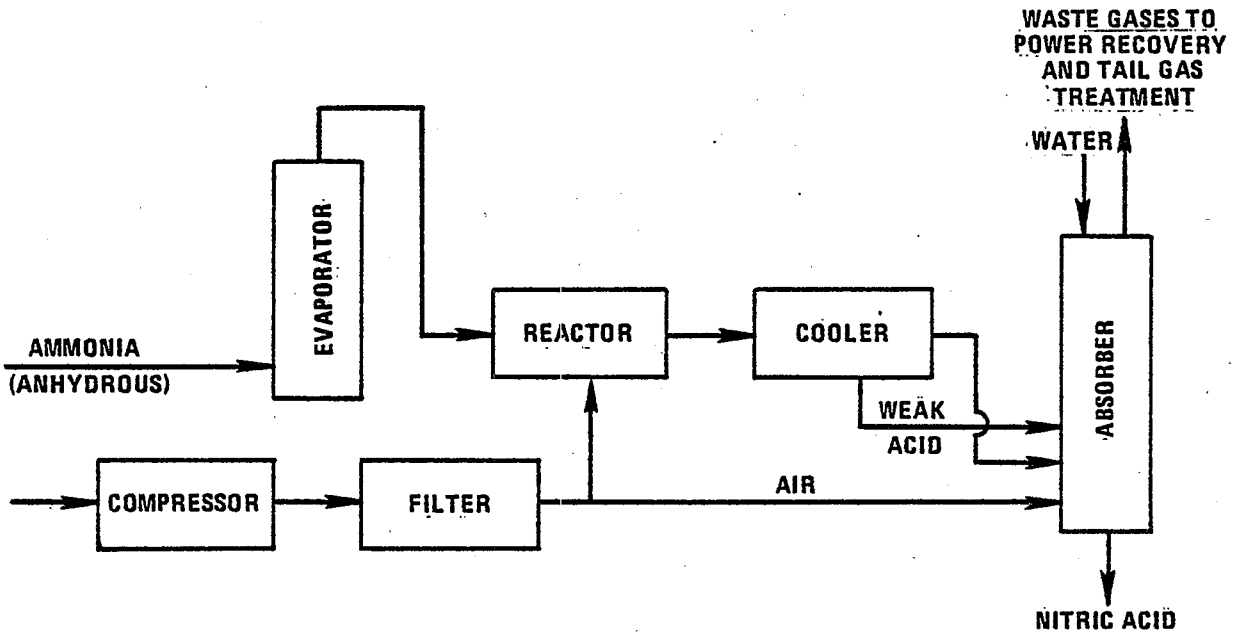


Figure 6-1. Single pressure nitric acid manufacturing process (Reference 6-3).

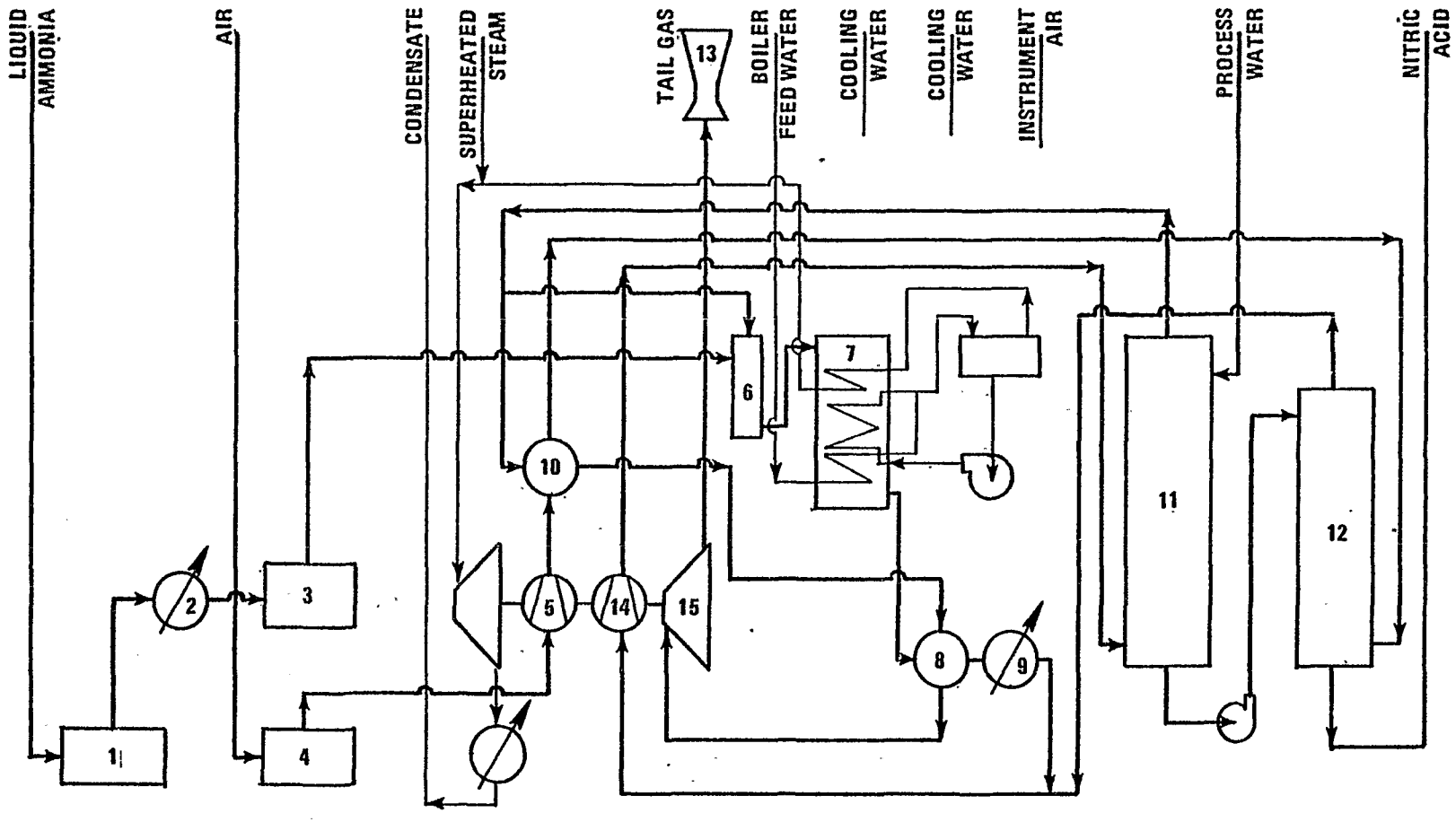


1. AMMONIA EVAPORATOR
2. AMMONIA PREHEATER
3. AMMONIA FILTER
4. AIR FILTER
5. AIR COMPRESSOR
6. AMMONIA-AIR MIXER
7. BURNER WITH LA MONTE BOILER
8. TAIL GAS PREHEATER I
9. GAS COOLER
10. TAIL GAS PREHEATER II
11. ABSORPTION COLUMN
12. DEGASSING TOWER
13. MIXING JET
14. NO COMPRESSOR
15. TAIL GAS TURBINE

Figure 6-2. Dual pressure nitric acid plant flow diagram (Reference 6-2).

absorption tower is internally water cooled to increase absorption by water. Nitric acid up to 70 percent concentration is withdrawn from the bottom of the column and degassed with the air feed to remove unconverted NO before being sent to storage. The air/NO mixture is combined with reactor effluent to form the absorber feed. High yields of up to 96 percent conversion and tail-gas emissions as low as 200 ppm $NO_2$ can be obtained by this process.

6.1.1.3 Nitric Acid Concentration

Figure 6-3 illustrates a nitric acid concentration unit using extractive distillation with sulfuric acid. A mixture of strong sulfuric acid and 55 to 65 percent nitric acid is introduced at the top of a packed column, and flows down the column counter-current to the ascending vapors. Nitric acid leaves the top as a 98 percent nitric acid vapor containing small amounts of $NO_x$ and oxygen, which result from the dissociation of nitric acid. The vapors pass to a bleacher and a condenser to condense nitric acid and separate $NO_x$ and oxygen, which pass to an absorber column for conversion to, and recovery of, nitric acid. Air is admitted to the bottom of the absorber. Dilute sulfuric acid is withdrawn from the bottom of the dehydrating tower and is sent to be concentrated further to be used for other purposes. The system usually operates at essentially atmospheric pressure.

6.1.1.4 Direct Strong Nitric Acid Processes

Nitric acid of high strength can be made directly from ammonia in direct strong nitric acid processes. These processes depend upon the formation of nitric acid by reaction of $NO_2$ or $N_2O_4$ with oxygen and water forming 95 percent to 99 percent nitric acid. In this direct process, the composition of the product nitric acid is not restricted by the azeotropic limit.

The principal licensors of these direct processes are Uhde and Davy Powergas. Uhde has built two plants in this country using their direct strong nitric acid process. The Uhde process will be described in detail below. Davy Powergas has two direct strong nitric acid processes; the CONIA process and the SABAR process. Davy has not built any plants utilizing these processes in the United States, but there is a CONIA plant recently constructed in Sweden and a SABAR plant recently constructed in Spain. How these processes differ from the Uhde process will also be described below.

Figure 6-4 shows a process flow diagram for a direct strong nitric acid plant. Air and gaseous ammonia are mixed and reacted where steam is generated in a combination burner/waste heat boiler by the heat of reaction. The reaction products are cooled, and a weak nitric acid condensate removed. The remaining gases are put through two oxidation columns where the NO is converted to $NO_2$.

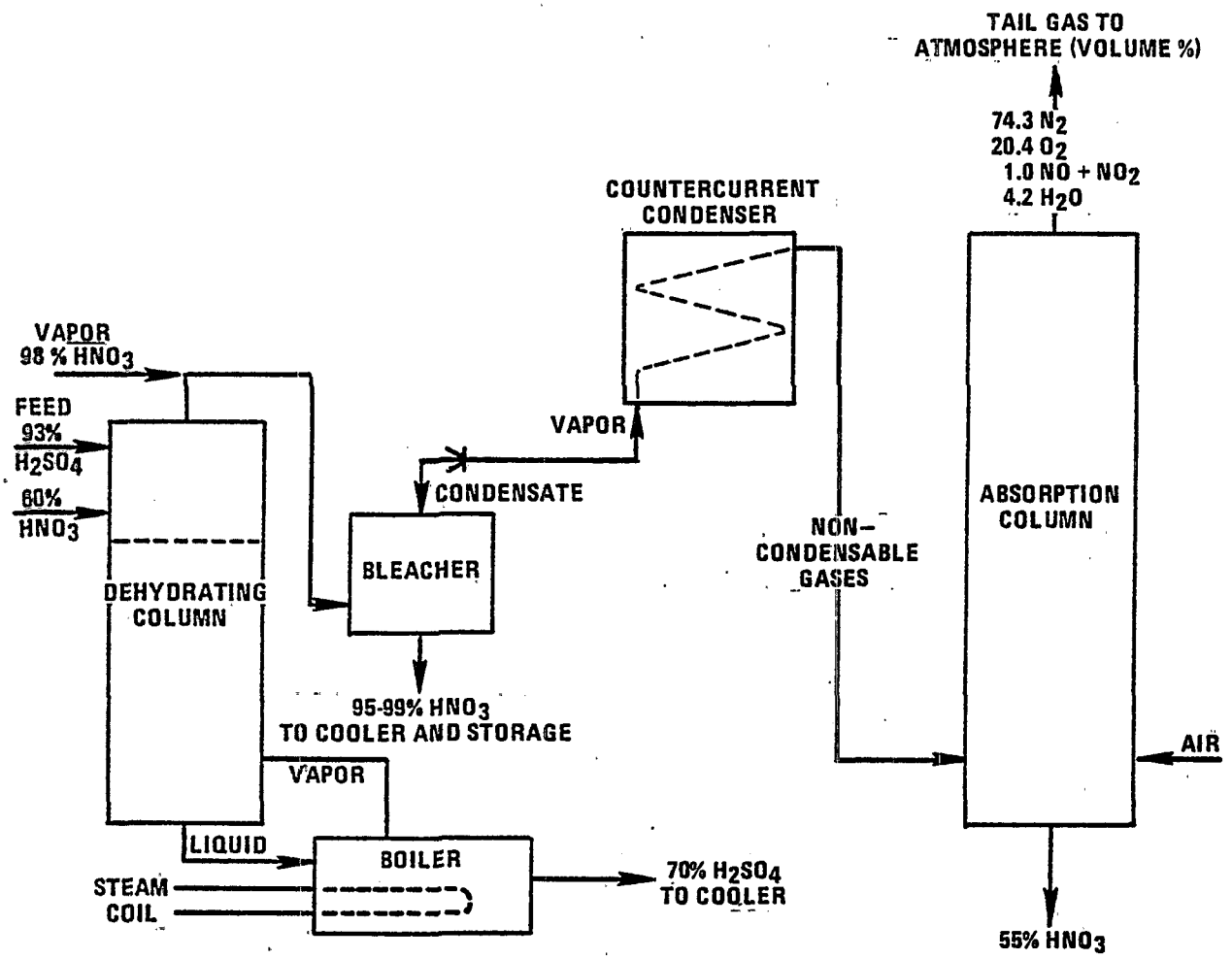


Figure 6-3. Nitric acid concentrating unit.

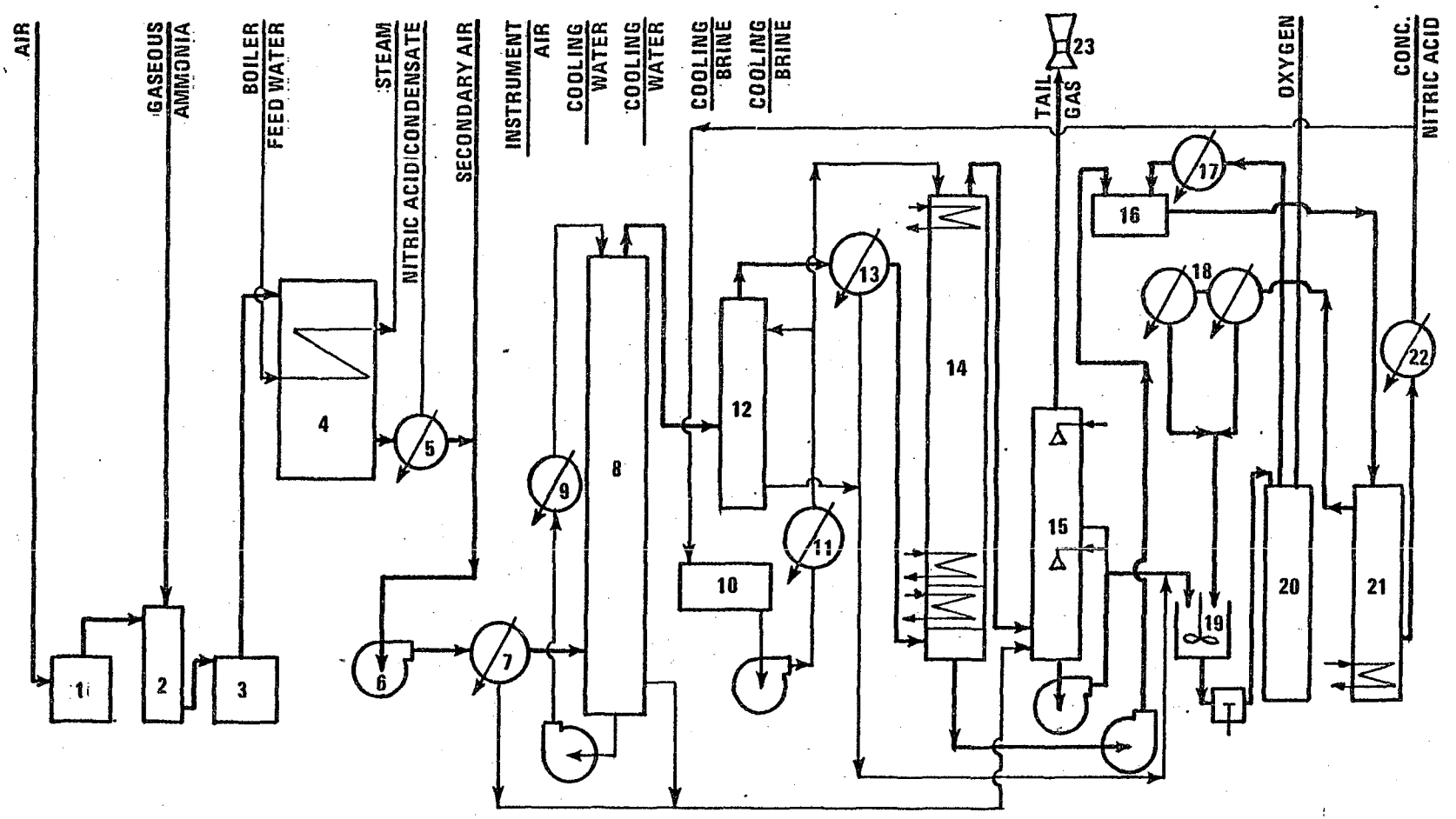


1. AIR FILTER
2. AMMONIA-AIR MIXER
3. AMMONIA GAS FILTER
4. BURNER WITH WASTE-HEAT BOILER
5. GAS COOLER I
6. BLOWER
7. GAS COOLER II
8. OXIDATION COLUMN
9. ACID COOLER
10. CIRCULATING ACID TANK
11. ACID COOLER
12. FINAL OXIDATOR
13. BRINE GAS COOLER
14. ABSORPTION COLUMN
15. TAIL GAS SCRUBBER
16. HEAD TANK FOR RAW ACID
17. RAW ACID COOLER
18. LIQUEFIER
19. AGITATOR VESSEL FOR
20. RAW MIXTURE
20. REACTOR VESSEL
21. BLEACHING COLUMN
22. FINAL ACID COOLER
23. MIXING JET

Figure 6-4. Process flow diagram for direct production of highly concentrated nitric acid (Reference 6-2).

The overhead vapors are compressed to a pressure that allows the equilibrium di-nitrogen tetroxide ($N_2O_4$) to be liquefied with the use of cooling water alone. The liquid $N_2O_4$ is converted to nitric acid of about 95 to 99 percent by reacting the $N_2O_4$ with oxygen at a pressure of 5000 kPa (50 atm). The conversion reaction is: $2N_2O_4 + 2H_2O \rightarrow 4HNO_3$. Tail gases from the absorption column are scrubbed with water and condensed $N_2O_4$ in a tail-gas scrubber before being released. The liquid from the tail-gas scrubber is mixed with the concentrated acid from the absorption column, which has been bleached and liquefied. The combined product liquid (containing $N_2O_4$ as well as $HNO_3$) is reacted with oxygen in the reactor vessel, cooled, and bleached to produce the concentrated nitric acid.

Both Uhde plants using this process were built in 1973 for the U.S. Government: one in Joliet, Illinois makes 236 Gg/d (260,000 tons/day) of 98.5 percent nitric acid; the second in Chattanooga, Tennessee, makes 313 Gg/d (345,000 tons/day) of 98 percent nitric acid. Neither are in operation at present, although, both were designed to meet the New Source Performance Standards.

In the Davy Powergas SABAR process (Reference 6-4), like the Uhde process, ammonia and air are reacted at atmospheric pressure, and a 2-3 percent nitric acid is condensed and removed as a byproduct. Davy Powergas estimates 0.3 kg of this weak acid byproduct is produced per kg of concentrated acid. As in the Uhde process, $NO_2$ is then produced from the product gases and absorbed in concentrated nitric acid. However, whereas Uhde forms $N_2O_4$ from this liquid, and reacts the $N_2O_4$ with oxygen, the SABAR process takes the concentrated $HNO_3$ to a vacuum rectification column, where concentrated $HNO_3$ comes off overhead and azeotropic nitric acid is collected at the bottom. Atmospheric emissions are less than 500 ppm nitric oxides, which would not meet the new source standards in the United States without further treatment.

Davy Powergas developed the CONIA process to meet the more stringent environmental regulations for its site in Sweden. The CONIA process also depends on the ammonia-air reaction, followed by removal of the water which is generated. The plant produces both 99.5 percent nitric acid and 54 percent nitric acid, with less than 200 ppm $NO_x$ in the stack gases, and no other solid or liquid waste streams. However, Davy Powergas considers this particular plant design to be over-designed and hence too costly for most applications unless lower emissions limits must be met (Reference 6-5).

### 6.1.2 Emissions

Absorber tail gas is the principal source of $NO_x$ emissions from nitric acid manufacturing. Minor sources include nitric acid concentrators and the filling of storage tanks and shipping containers. Nitrogen oxide emissions from nitric acid manufacturing are estimated at 127 Gg

(140,000 tons) during 1974, which is about 1.0 percent of the $NO_x$ emissions from stationary sources. It is estimated that 7.4 Tg (8.2 million tons) of nitric acid (100 percent) were produced in 1974 (Reference 6-6). AP-42 (Reference 6-7) cites an average emission factor for uncontrolled plants of 25 to 27.5 kg/Mg of acid. Typical uncontrolled tail-gas concentrations are on the order of 3000 ppm of $NO_x$ with equal amounts of NO and $NO_2$ (Reference 6-8). Unde cites emission levels in excess of 800 ppm for low-pressure plants, 400 to 800 ppm for medium-pressure plants, and less than 200 ppm for high-pressure plants (Reference 6-2). The extent of control for these plants is not known, although, Uhde did state that all three processes could be designed in such a way as to meet State and Federal emission limits.

In any nitric acid plant, the $NO_x$ content of tail gas is affected by several variables. Abnormally high levels may be caused by insufficient air supply, high temperature in the absorber tower, low-pressure, production of acid at strengths above design, and internal leaks, allowing gases with high nitrogen oxide content to enter the tail-gas streams. Careful control and good maintenance are required to hold tail-gas nitrogen oxide content to a minimum.

### 6.1.3 Control Techniques for $NO_x$ Emissions from Nitric Acid Plants

Nitric acid plants can be designed for low $NO_x$ emission levels without any add-on processes. Such plants are usually designed for high absorber efficiency; high inlet gas pressures and effective absorber cooling can lead to low $NO_x$ emissions. However, many new plants, and all existing plants, are not designed for $NO_x$ emission levels low enough to meet present standards. For these plants, add-on abatement methods are necessary.

The available abatement methods suitable for retrofit include chilled absorption, extended absorption, wet chemical scrubbing, catalytic reduction, and molecular sieve adsorption. In this section, these various control techniques for $NO_x$ are described. These techniques may also be appropriate for retrofit of explosive and adipic acid plants.

Many of the retrofit processes are offered by more than one licensor, and many licensors (such as Uhde) offer more than one process. Table 6-1 lists the major processes, the types of plants for which the processes are most suitable, and examples of nitric acid plants where the processes have been applied. (The examples of nitric acid plants are not meant to be inclusive.)

The selection of a control method depends on such things as the degree of control required, the operating pressure of the plant, and the cost and availability of fuel. For example catalytic reduction was used to establish the NSPS originally. Since that time fuel costs have risen to the point where catalytic abatement is not economically attractive for new nitric acid plants but can be used as an effective secondary treatment to meet the NSPS.

TABLE 6-1. $NO_x$ ABATEMENT METHODS ON NEW OR EXISTING NITRIC ACID PLANTS

| Process | Method | Comments | Licensors | Examples |
|---|---|---|---|---|
| Chilled Absorption | Increased solubility of $NO_x$ in chilled water | Usually cannot meet NSPS without other add-on technology or lowered acid product concentration | COL-VITOK | 2-318 Mg/d (350 tons/day) (with Gulf catalytic reduction add-on). Nitram, Tampa, Fla. |
| | | | TVA | 2-50 Mg/d (55 tons/day) plants at Muscle Shoals, (1972) |
| Extended Absorption | Increased absorption of $NO_x$ by additional absorption equipment | Inlet pressure of 760 kPa required (additional compressors may be required) | J. F. Pritchard (Grande Paroisse) | 327 Mg/d (360 tons/day) plant, Miss. Chemicals, Yazoo City, Miss. 1973.<br>272 Mg/d (300 tons/day) Holston Army Ammunition Plant, Kingsport, Tenn.<br>Cominco Plant, Beatrice Neb.<br>Kaiser, Tampa, Fla. and Bainbridge, Ohio |
| | | | P. M. Weatherly | 9 U.S. plants, 1 Japan plant (employs chilled absorption process) |
| | | | Chemico | 908 Mg/d (1000 tons/day) Monsanto, Pensacola, Fla. 1977. |
| | | Requires additional compressor | Uhde | 250 Mg/d (275 tons/day) plant, Allied Chemical, Omah, Neb. 1975 |
| | | | C&I Girdler CoFAZ | None built to date |
| Wet Chemical Scrubbing | Scrubbing tail gases with urea solution or ammonia to recover $NO_x$ | Performs better at high pressure but operable at lower pressures. Recovers ammonium nitrate and urea solution. Requires refrigeration. | MASAR (urea scrubbing) | Ill. Nitrogen Plt., Marsalles, Ill.<br>Air Products & Chem., Pace, Fla. |
| | | | Norsk Hydro (urea scrubbing) | Norsk Hydro, Proggunn, Norway |
| | | May require an evaporator to produce a concentrated ammonium nitrate by product. No refrigeration required. | Goodpasture (ammonia scrubbing) | 90 Mg/d (100 tons/day) Goodpasture plt., 1974. Dimmitt, Texas<br>Chevron Oil Co., Richmond, Calif. 1976<br>C.F. Industries, Fremont, N.D.<br>2 scrubbers for 7 plants totalling 544 mg/d (600 tons/day). Cyanamid, Welland, Ont. |

TABLE 6-1. $NO_x$ ABATEMENT METHODS ON NEW OR EXISTING NITRIC ACID PLANTS (Concluded)

| Process | Method | Comments | Licensors | Examples |
|---|---|---|---|---|
| Catalytic Nonselective | Burns $NO_x$ and $O_2$ with $CH_4$ or $H_2$ to form $N_2$, $H_2O$, $CO_2$ | • Consumes natural gas, uneconomical if high $NO_x$ or $O_2$ content (also reacts with $O_2$)<br>• May be used in conjunction with extended absorption<br>• Energy recovery possible<br>• Works at low or high pressure | C&I Girdler | Olin, Lake Charles, La. (also, Weatherby plants) |
| | | | D. M. Weatherly | IMC Corp., Strelington, La. (1976) (with extended absorption). 817 Mg/d (900 tons/day), 1977. Columbia Nitrogen, Augusta, Ga. |
| | | | Chemico | Location not available |
| Catalytic Selective | Burns $NO_x$ with ammonia to form $N_2$ and $H_2O$; $O_2$ not affected | • Uses ammonia, can be expensive to operate<br>• Often used with extended absorption<br>• Works at low or high pressure<br>• Energy recovery usually not possible<br>• Can achieve very low emission if desired | Gulf | Nitram plants in Tampa, Fla., installed after CDL/VITOK process.<br>10 plants in U.S. |
| | | | Uhde (BASF catalysts) | Plants in Europe and Japan |
| | | | Mitsubishi | |
| Heterogeneous Catalysis | Oxidation of NO → $NO_2$ catalyzed by heterogeneous catalysis before absorption | Limited success | CDL/VITOK | Under development |
| Chemical Absorption | Oxidation with $KMnO_4$ ($KMnO_4$ electrolytically reclaimed | Uneconomical not presently offered | Carus Chemical | 2 plants in Japan, not currently offered in U.S. |
| Molecular Sieve | Absorption by molecular sieve, regeneration of the sieve by thermal cycling | • High energy and capital demands<br>• Hard to fit cycling of sieve into continuous plant operation | Purasiv N (Union Carbide) | 50 mg/d (55 tons/day) Hercules, Inc. Bersemer, Ala. 1974<br>50 mg/d (55 tons/day) U.S. Army, Holston, Kingston, Tenn. (inoperable, dismantled) |

The inlet pressure at the absorber is an important factor in the selection of $NO_x$ control equipment. In general, extended absorption equipment cannot be economically installed where the equipment will have inlet pressures of less than 758 kPa (110 psia). Consequently, extended adsorption is not usually chosen for older, low pressure nitric acid plants. Wet scrubbing and molecular sieve absorption are also not as effecive at low pressures. Catalytic reduction, however, does not require high pressures.

6.1.3.1 Chilled Absorption

This method is used primarily for retrofit of existing plants. Chilling the water used in a nitric acid absorption tower leads to higher yields of nitric acid and lower $NO_x$ concentrations in the tail gas. Both water and brine solutions have been used in a closed loop system to provide local cooling to the liquid on the trays of the absorption tower. Absorption may be further enhanced by heterogeneous catalytic oxidation of NO to $NO_2$ upstream of the absorption tower.

CDL/VITOK Process

Figure 6-5 shows a CDL/VITOK process flow diagram. Tail gas enters the absorber, where the gases are contacted with a nitric acid solution to both chemically oxidize and physically absorb nitrous oxides. The reaction of NO to $NO_2$ may be catalyzed in the main absorber. The upper portion of the absorber is water cooled to improve absorption. The nitric acid solution from the absorber is sent to a bleacher where air removes entrained gases and further oxidation occurs. The bleached nitric acid solution is then either sent to storage or recirculated to the absorber after the addition of make-up water. The process employes a closed loop system to chill the recirculated acid solution and tower cooling water by ammonia evaporation.

One variation in this system proposed by CDL/VITOK includes the addition of an auxilliary bleacher operating in parallel with the primary unit. Another variation uses a secondary absorber with its own bleacher.

At the Nitram, Tampa, Florida location two 318 Mg/d plants were fitted with the CDL/VITOK process. $NO_x$ tail gas concentrations were reduced from 1500 to 1800 ppm to 600 to 800 ppm. With the addition of a gulf catalytic abatement system the plant meets local regulations. A second plant at Nitram fitted with the process showed promise but was shut down and replaced with a new nitric acid plant.

TVA Process

The Tennessee Valley Authority, at their nitric acid plant in Muscle Shoals, Alabama, designed and installed refrigeration for $NO_x$ abatement pruposes in 1972, in order to meet State standards of 2.75

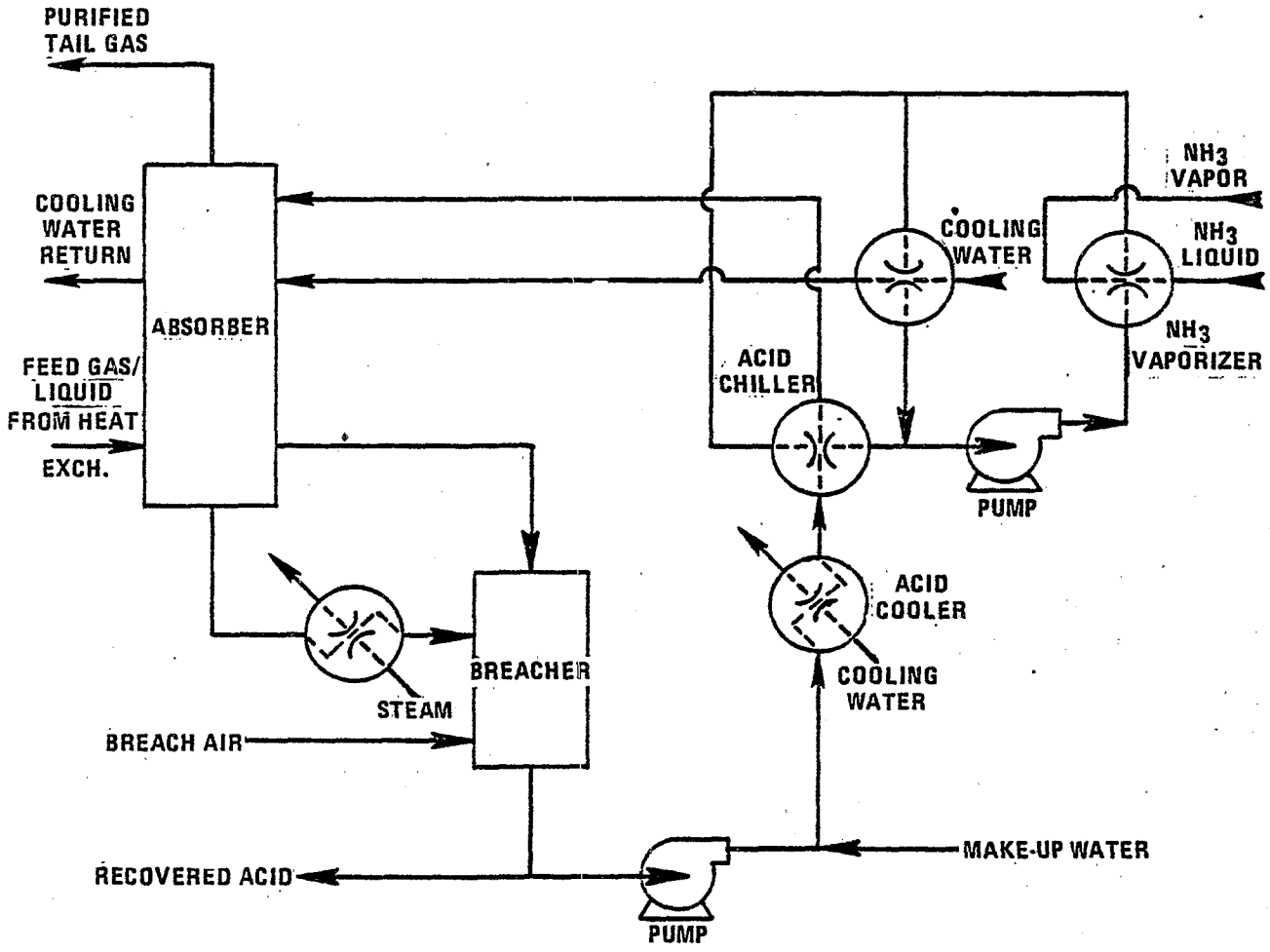


Figure 6-5. Schematic diagram of the CDL/VITOK $NO_x$ removal process (Reference 6-8).

kg/Mg of nitric acid (5.5 lbs/ton). A flow diagram of their abatement equipment is shown in Figure 6-6 (Reference 6-10). It consists of a cooler attached to the nitric acid absorption tower, and a bleacher from which any effluent gases are recycled to the absorption tower. As a result of adding the $NO_x$ control process the concentration of the product acid dropped from 65 percent to 51 to 57 percent.

6.1.3.2 Extended Absorption

The extended absorption process basically consists of a second absorption column to which the tail gas from the nitric acid plant is sent. The $NO_x$ is absorbed by water and forms nitric acid, which increases the acid yield. Extended absorption can be added in conjunction with pressurizing the tail gas upstream of the tower or chilling the absorbent in the tower. However, neither of these options is a necessary part of the absorption process.

This process is offered by several licensors, including J. F. Pritchard (Grande Paroisse process), D. M. Weatherly, Chemico, Uhde and C and I Gridler (CoFaz process). The economics of the process generally require the inlet pressure at the absorber to be at least 758 kPa (110 psia). Also, cooling is usually required if the inlet $NO_x$ concentration is above 3000 ppm (Reference 6-6). There is no liquid or solid effluent from extended absorption; the weak acid from the secondary absorber is recycled to the first absorber, increasing the yield of nitric acid. In some cases, extended absorption can be used in conjunction with catalytic tail gas treatment (see Section 6.1.3.4).

Figure 6-7 shows a process flow diagram for the Grande Paroisse process, which is representative of extended absorption processes. Off-gas from the existing absorber flows into the secondary, or Grande Paroisse absorber. The tail gas from the secondary absorber goes to an existing tail-gas heater before being vented to the atmosphere or passing through a catalytic reduction unit. The liquid effluent is returned to the primary absorber to become part of the acid product.

More than 15 extended absorption plants (by various licensors) are operating in the United States. In cases where the off-gas must be compressed before going to the secondary absorber, or where refrigeration is used, maintenance requirements are increased. Power recovery by an air compressor/tail-gas expander is usually employed when a pressurized absorber is used.

6.1.3.3 Wet Chemical Scrubbing

Wet chemical scrubbing uses liquids, such as alkali hydroxides, ammonia, urea and potassium permanganate to convert $NO_2$ to nitrates and/or nitrites by chemical reaction. Also, scrubbing may be done with water or with nitric acid. Several of these processes are described below.

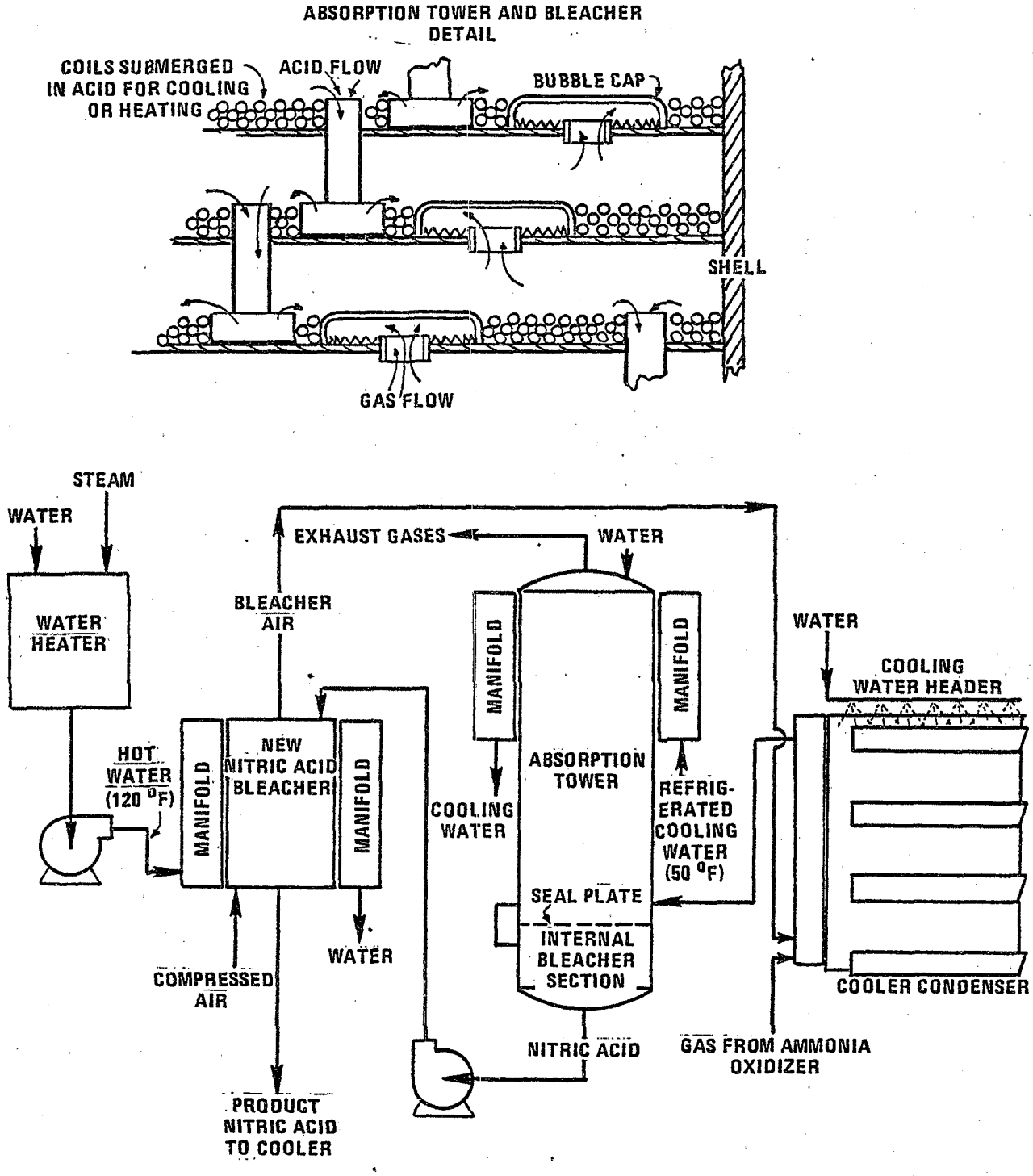


Figure 6-6. TVA chilled absorption process (Reference 6-10).

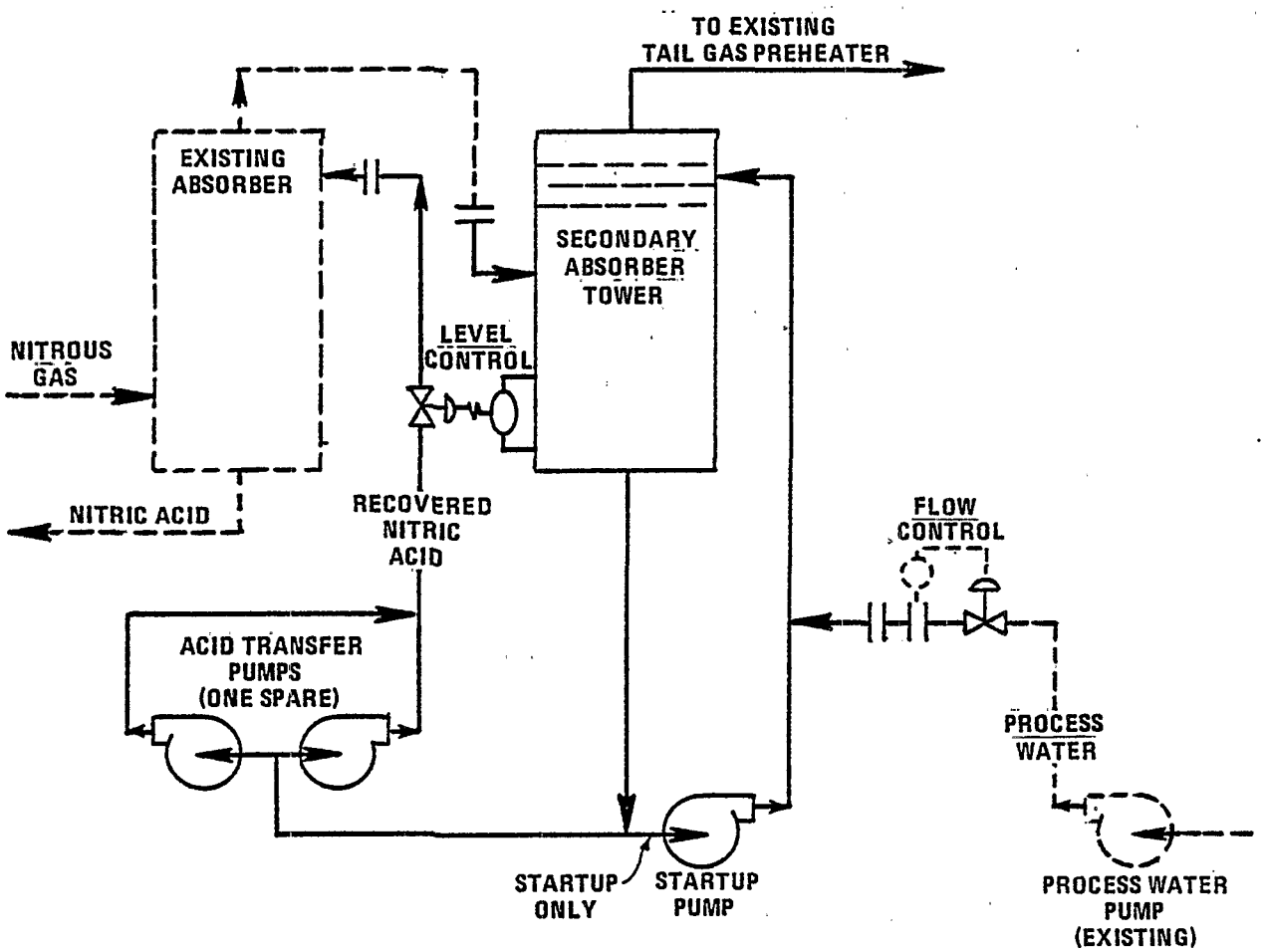


Figure 6-7. Grande Paroisse extended absorption process for $NO_X$ treatment.

Urea Scrubbing

This process is offered by two licensors: MASAR, Inc. and Norsk Hydro. The mechanisms given below have been proposed for this process (Reference 6-11).

$$HNO_2 + CO(NH_2)_2 \rightleftarrows N_2 + HNCO + 2H_2O \quad (6\text{-}4)$$

$$HNCO + HNO_2 \rightleftarrows N_2 + CO_2 + H_2O \quad (6\text{-}5)$$

$$HNCO + H_2O + H^+ \rightleftarrows NH_4^+ + CO_2 \quad (6\text{-}6)$$

When the concentration of nitric acid is low, reaction (6-6) predominates so that the overall reaction is

$$HNO_2 + CO(NH_2)_2 + HNO_3 \rightleftarrows N_2 + CO_2 + NH_4NO_3 + H_2O \quad (6\text{-}7)$$

As shown in reaction (6-7), half the nitrogen in the reaction will form $NH_4NO_3$, a valuable by-product, and half will form $N_2$, a nonpolluting species.

The MASAR process is shown in Figure 6-8. A three-stage absorption column is used with gas and liquid chillers on the feed gas and recirculated solvents. The process as described by MASAR, Inc., (Reference 6-12) is given below.

The MASAR process, as applied to nitric acid plants, takes the tail gas from the exit of the absorption tower and passes it to a gas chiller where it is cooled. During this cooling operation, condensation occurs with the formation of nitric acid. This chilled gas and condensate passes into Section A of the MASAR absorber. Meanwhile, the normal feedwater used in the nitric acid plant absorption tower is chilled in Section C of the MASAR absorber and is then fed to Section A of the MASAR absorber, where it flows down through the packing countercurrent to the incoming chilled tail gas to scrub additional $NO_x$ from the tail gas. This scrubbing water is recirculated through a chiller to remove reaction heat and then this weak nitric acid stream is fed to the nitric acid plant absorber to serve as its feedwater.

The tail gas then passes into Section B of the MASAR absorber where it is scrubbed with a circulating urea-containing solution. A urea/water solution is made up in a storage tank and metered into the recirculating system at a rate necessary to maintain a specified minimum urea residual content. As the solution scrubs the tail gases, both nitric acid and nitrous acids are formed, and the urea in the solution reacts with the nitrous acid to form $CO(CO_2)$, $N_2$, and $H_2O$. As the solution is circulated, the nitric acid content rises and some of the urea present hydrolyzes and forms some ammonium nitrate. To maintain the system in balance, some of the circulated solution is withdrawn. The recirculated solution is also pumped through a chiller to remove the heat of reactions and to maintain the desired process temperature in Section B.

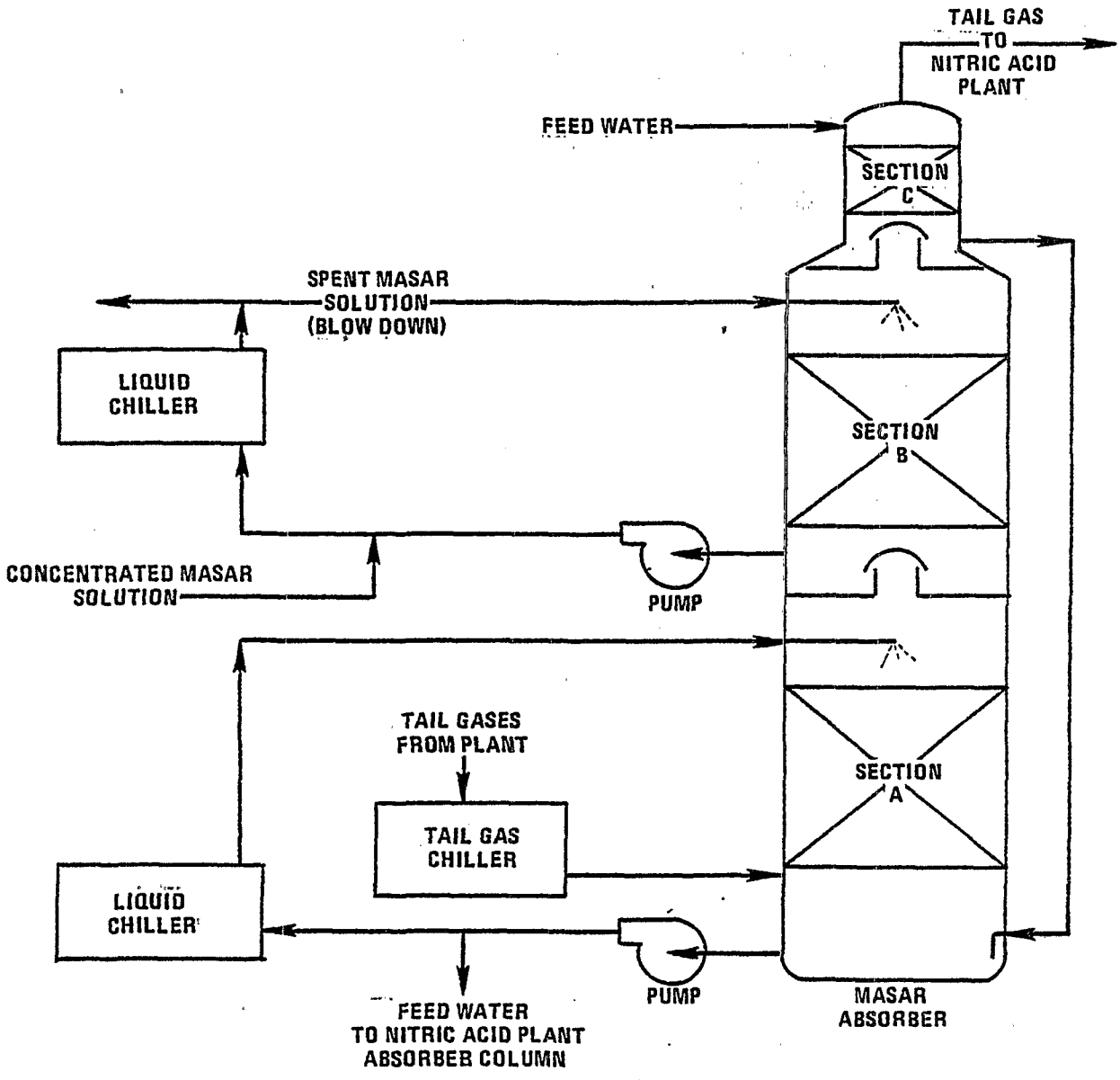


Figure 6-8. Flow diagram of the MASAR process (Reference 6-12).

The tail gases then pass into Section C where they are again scrubbed by the feedwater stream that is used, ultimately, as the nitric acid plant absorption tower feedwater. The tail gases then leave the MASAR absorber and pass on to the normally existing mist eliminator and neat exchanger train of the nitric acid plant. The cooling medium used in the gas chiller can be liquid ammonia. The vaporized ammonia is subsequently used as the feed to the plant ammonium nitrate neutralizer. For non-ammonia nitrate producers, mechanical refrigeration could be used or the ammonia vapor can be used in the nitric acid converter directly.

The MASAR process has been reported to reduce $NO_x$ emissions from 4000 ppm to 100 ppm. The process could technically be designed for no liquid effluent. In practice, however, liquid blowdown of 16 kg/h (35 lb/hr) of urea nitrate in 180 kg/h (396 lb/hr) of water is estimated for a 320 Mg of acid/day (350 tons/day) plant (Reference 6-12).

A MASAR unit installed in 1974 for Illinois Nitrogen Corporation on a 320 Mg/d plant regularly operates with between 100 and 200 ppm of $NO_x$ in the tail gas. According to the Illinois Nitrogen plant manager (Reference 6-13), inlet $NO_x$ concentrations to the MASAR unit are approximately 3500 ppm and outlet concentrations are between 200 and 400 ppm. The Illinois Environmental Protection Agency has tested this unit, using Method 7, with reproducible results of 57 ppm average emissions. The unit is reported to operate with good reliability and has increased the net product recovered.

The Norsk Hydro process was developed by Norsk Hydro A/S, the Norwegian state-owned power generating authority and fertilizer and chemical manufacturer, to reduce $NO_x$ emissions from 1525 ppm to 850 ppm. The modifications were made to an older, atmospheric pressure plant and two more recent medium-pressure plants (300 and 500 kPa) (44 to 72 psia). Basically, the last absorption towers in the process streams of the older plant were modified to contact the tail gases from all three plants with urea solution and nitric acid. The result was a net 44 percent reduction in $NO_x$ emissions, as given above. On a plant-wide basis, 10.4 kg of ammonium nitrate are produced per Mg of nitric acid (20.8 lb/ton) (Reference 6-11).

Norsk Hydro has also used urea addition on three plants producing a total of 5 Gg/d (5500 tons/day) of prilled NPK fertilizers. This method was used to control $NO_x$ emissions for lower-grade phosphate rock. Nitrous oxide is evolved when nitric and nitrous acid oxidizes impurities in the rock such as sulphides and organic material. The addition of urea to the phosphate rock digester tends to reduce $NO_x$ emissions to 2.5 kg/Mg (5 lb/ton) phosphate from levels as high as 40 kg $NO_x$ per Mg phosphate (80 lb/ton) by adding 5 to 10 kg urea per Mg phosphate rock (10 to 20 lb/ton) (Reference 6-11).

Ammonia Scrubbing (Goodpasture Process)

Goodpasture, Inc. of Brownfield, Texas is the licensor of a process developed in 1973 in order for its Western Ammonia Corporation nitrogen complex in Dimitt, Texas to meet a 600 ppm maximum $NO_x$ effluent imposed by the Texas Air Control Board. The process which was developed is suitable to retrofit existing plants for reduction of an inlet concentration of 10,000 ppm to within the 1.5 kg $NO_2$/Mg acid (∿210 ppm) standards set for new nitric acid plants.

The process flow diagram for this process is shown in Figure 6-9. Feed makeup streams to this process are ammonia and water with ammonium nitrate produced as a byproduct. The total process is conducted in a single packed contact absorption tower with three sections operated in a co-current flow. Goodpasture states that the key to successful operation is the process' capability to minimize the formation of ammonium nitrite and to oxidize the ammonium nitrite which does form to ammonium nitrate.

The Goodpasture process consists of three distinct sections. The first is a gas absorption and reaction section operating on the acidic side, the second is a gas absorption and reaction section operating on the ammoniacal side, and the third is principally a mist collection and ammonia recovery step.

In the first section, a significant portion of the oxides of nitrogen react to form nitric acid which maintains the acidic condition in this section. The nitric acid formed reacts with the free ammonia content of the solution from the ammoniacal section to form ammonium nitrate — a portion reacting in the acidic section, and a portion reacting in the ammoniacal section. The feed solution to the acidic section is the product solution from the ammoniacal section. The ammonium nitrite content of this solution is oxidized to ammonium nitrate by the acidic conditions existing in this first section. The product solution from the Goodpasture process is withdrawn from this acidic section.

In the second, or ammoniacal contacting, section the remainder of the oxides of nitrogen react to form ammonium nitrate and ammonium nitrite; the proportion of each being dependent on the oxidation state of the oxides of nitrogen in the gas phase. Ammonia is added to the circulating solution within this section to maintain the pH at a level of 8.0 to 8.3. The liquid feeds to this section are the product solution from the mist collection section, and a portion of the acidic solution from the first section.

The third section is incorporated principally to collect the mist, and any ammonium nitrate or ammonium nitrite aerosols which form in the first two sections. In addition, any free ammonia

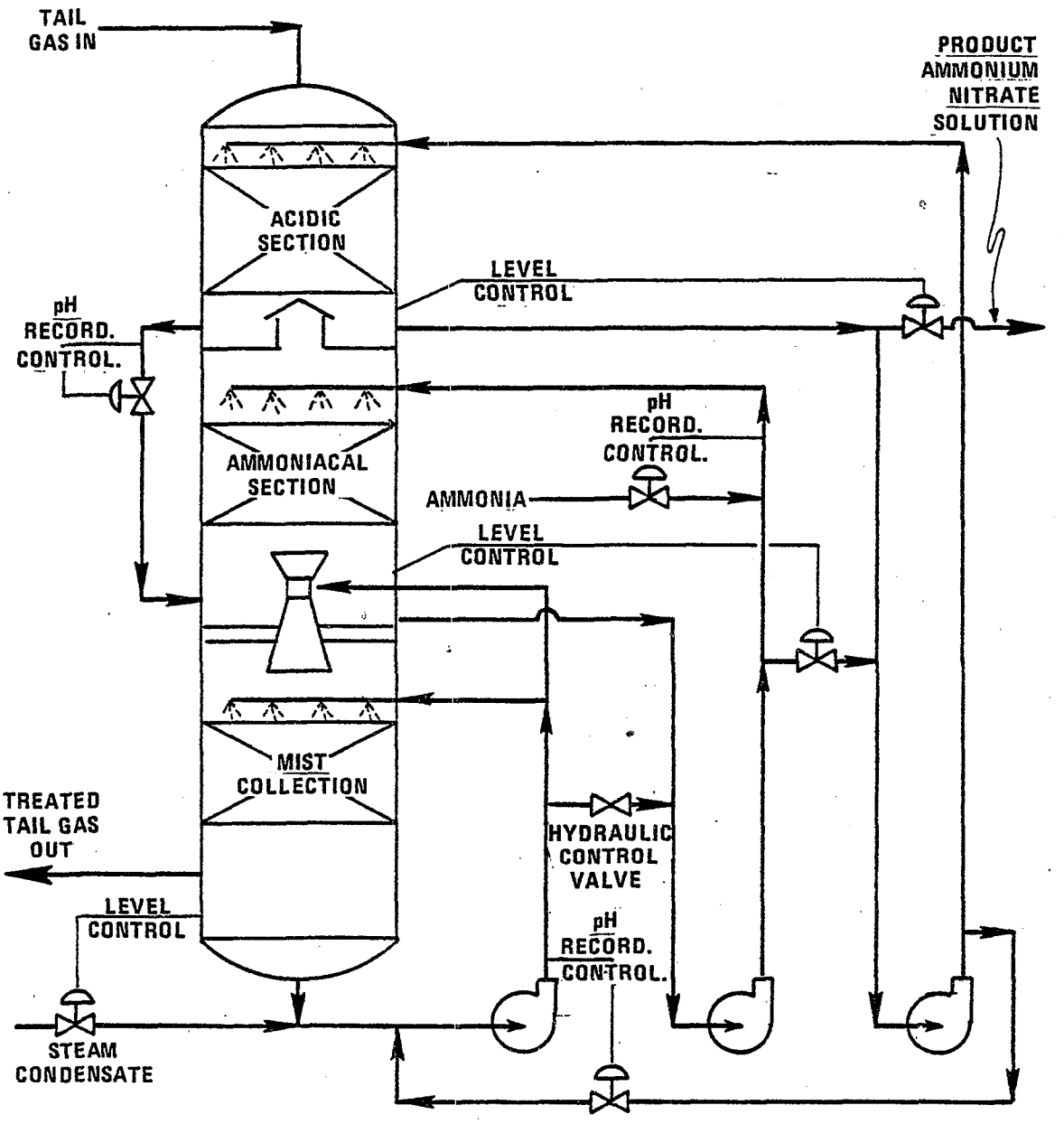


Figure 6-9. Process flow diagram for the Goodpasture process (Reference 6-14).

stripped from the solution in the ammoniacal section is also recovered in this third section. Process water or steam condensate is fed to this section in quantities sufficient to maintain the product ammonium nitrate solution in the 30 to 50 percent concentration range. A small amount of the acidic solution is also fed to this section in order to control the pH to approximately 7.0.

The product solution from the abatement process is withdrawn at about 35 to 40 percent ammonium nitrate concentration, and contains approximately 0.05 percent ammonium nitrite. At the Dimmitt plant, this solution is heated to 390K (240F), which completes the removal of the ammonium nitrite, before further processing. Other users have discovered that if the solution sits for a day in a day-tank, without heating, the ammonium nitrite is removed.

The Goodpasture process has been installed at CF Industries' Fremont, Nebraska plant and Chevron Chemical's Richmond, California plant. In addition, American Cyanamid Company is installing the process at one high-pressure and six low-pressure plants in Canada. Existing systems have given reliable operation and have met the emissions requirements for which they were designed.

One particular advantage of this process is that the pressure losses in the process are only 6.8 to 13.0 kPa (1-2 psi) which allows its application to low-pressure plants. One older, 340 kPa (49 psia) plant has consistently met its required 400 ppm outlet concentration. Another advantage of the low-pressure drop is that reheat and power recovery of the effluent train in moderate-pressure plants is usually economical. However, special precautions must be taken to eliminate deposition of ammonium nitrate on the turbine blades.

Energy requirements of the process have been less than expected. The original design specified heating the ammonium nitrate scrubbing solution to facilitate oxidation of ammonium nitrite to nitrate. However, it has been found that this reaction occurs spontaneously if the solution is allowed to stand for a day in a holding tank.

The retrofit of a Goodpasture unit may require some additional process modifications beyond the abatement equipment. For example, modern fertilizer plants use ammonium nitrate solutions in excess of 85 percent. The Goodpasture byproduct solution is only 35 to 55 percent ammonium nitrate; therefore, additional evaporators may be needed to concentrate the Goodpasture effluent. Chevron; however, reports significant overall steam savings without additional evaporators.

Caustic scrubbing

Sodium hydroxide, sodium carbonate and other strong bases have been used for nitric acid scrubbing. Typical reactions for this process are:

$$2NaOH + 3NO_2 \rightleftarrows 2NaNO_3 + NO + H_2O \quad (6\text{-}8)$$

$$2NaOH + NO + NO_2 \rightleftarrows 2NaNO_2 + H_2O \quad (6\text{-}9)$$

A caustic scrubbing system was installed at a Canadian nitric acid plant in the late 1950's (Reference 6-15). However, disposal of the spent solution is a serious water pollution problem, and the concentrations of the salts are too low for economic recovery. There have been no recent installations of this process.

Potassium Permanganate Scrubbing

Another potential chemical for scrubbing solutions is potassium permanganate. The Carus Chemical Company (a large producer of potassium permanganate) has developed a process for potassium permanganate solution scrubbing of $NO_x$. However, in the process, permanganate is reduced to manganate, which must be electrolytically oxidized. The cost for the electrolysis, as well as the permanganate make up cost, makes the process uneconomical. This process has not been installed at any nitric acid plant in this country. Two plants are in operation in Japan, but no cost or user information is available.

6.1.3.4 Catalytic Reduction

This section describes two different catalytic reduction processes. They are nonselective catalytic reduction and selective catalytic reduction.

Nonselective Catalytic Reduction

In nonselective catalytic absorption, methane or hydrogen reacts with the $NO_x$ and oxygen in the tail gas to form $N_2$, $H_2O$, and $CO_2$. A schematic of a typical catalytic reduction unit is shown in Figure 6-10. The reactions (given in Section 3.3.2.4) in the abater are exothermic; and careful temperature control is necessary for effective operation. The controls needed for operation as a decolorizer are much less stringent.

Catalytic reduction units for decolorization and power recovery are used in about 50 nitric acid plants in the United States. Many plants use natural gas for the reducing agent because of its easy availability and low cost.* Some plants use hydrogen. When natural gas is used, the tail gas must be preheated to about 753K (900F) to ensure ignition. A preheat temperature as low as 423K (300F) is sufficient to ignite hydrogen.

Catalytic reduction is highly exothermic. The temperature rise for the reaction with methane is about 128K (230F) for each percent oxygen burnout; with hydrogen it is about 150K (270F). For

*Relative to hydrogen this is still true; however, the economics of using natural gas have greatly changed in the last three years.

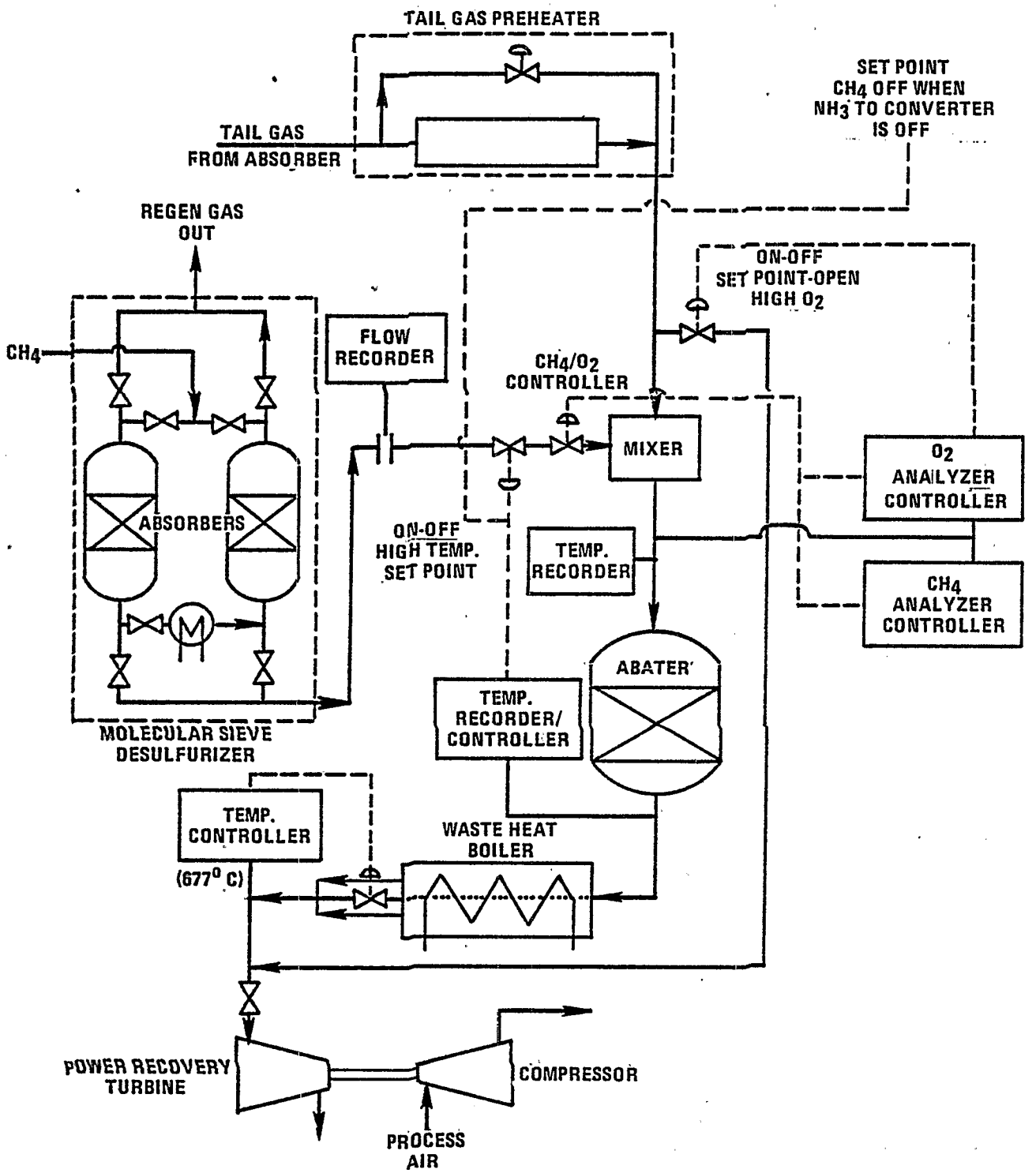


Figure 6-10. Nonselective catalytic reduction system (Reference 6-16).

decolorization, the outlet temperature is ordinarily limited to 923K (1,200F), the maximum temperature limit of turboexpanders with current technology. Increased power recovery may justify adding sufficient methane to reach the temperature limit of the turbine.

The tail gas must be preheated to 753K (900F) to insure ignition when methane is used as the reducing agent. Outlet temperatures would reach 1,088K and 1,138K (1,500F and 1,590F) for 2 and 3 percent oxygen burnout, respectively. These temperatures compare to the 923K (1,200F) maximum temperature limit for single-stage operation. The oxygen in the tail gas cannot exceed 2.8 percent to remain within the temperature limit of the catalyst. Cooling must therefore be provided to meet the turboexpander limit. Older turbines may have even lower temperature limitations.

A somewhat cheaper but less successful alternative is two-stage reduction for abatement. One system involves two reactor stages with interstage heat removal (Reference 6-17). Another two-stage system for abatement involves preheating 70 percent of the feed to 753K (900F), adding fuel, and passing the mixture over the first-stage catalyst. The fuel addition to the first stage is adjusted to obtain the desired outlet temperature. The remaining 30 percent of the tail gas, preheated to only 393K (250F), is used to quench the first stage effluent. The two streams plus the fuel for complete reduction are mixed and passed over the second-stage catalyst; the effluent passes directly to the turboexpander. This system avoids high temperatures and the use of coolers and waste heat boilers (References 6-18, 6-19, and 6-20).

Honeycomb ceramic catalysts have been employed in two-stage abatement, with hourly gas-space velocities of about 100,000 volumes per hour per volume in each stage (Reference 6-21).

Nonselective catalyst systems are offered by D. M. Weatherly, C & I Girdler and Chemico. These systems are not as popular as $NO_x$ control methods because of rising fuel costs.

Two or three plants are known to have installed single-stage nonselective abaters. They are believed to have been designed for natural gas. As noted above, oxygen concentration cannot exceed about 2.8 percent. The reactors must be designed to withstand 1,088K to 1,118K (1,500F to 1,550F) at 790 to 930 kPa, which requires costly refractories or alloys. Ceramic spheres are used as catalyst supports, at hourly gas space velocities up to 30,000 volumes per hour per volume. One company reports that they have been able to maintain $NO_x$ levels of 500 ppm or less over an extended period of time. Operation close to 300 ppm might be attainable. On a plant scale, the effluent gas must be cooled by heat exchange or quenched to meet the temperature limitation of the turbine. It may be practical to use a waste heat boiler to generate steam.

Commercial experience with single-stage catalytic abaters has been modestly satisfactory, but two-stage units operating on natural gas have not been as successful. Two-stage units designed

for abatement have frequently achieved abatement for periods of only a few weeks, at which point declining catalyst activity results in increasing NO levels. Recent data indicate that successful abatement can be maintained for somewhat longer periods. Units that no longer abate $NO_x$ emissions can, however, continue to serve for energy recovery and decolorization.

The success of single-stage abaters compared to the limited success of two-stage units may result from the following factors: the catalyst is in a reducing atmosphere, the temperatures are higher, and spherical rather than honeycomb catalyst supports are used. It has not been practical to change catalyst type in two-stage units because the reactors designed for a space velocity of 100,000 volumes per hour per volume would be too small to accommodate a spherical catalyst, which effectively removes $NO_x$ at a space velocity of about 30,000. The failure of the honeycomb catalyst in $NO_x$ reduction compared to its success in decolorization may reflect that reaction kinetics make it much more difficult to reduce NO than $NO_2$.

Fuel requirements for nonselective abatement with methane are typically 10 to 20 percent over stoichiometric. Some hydrocarbons and CO appear in the treated tail gas. Furthermore, not all methane is converted in decolorization reduction units. Less surplus fuel is required when hydrogen is used.

Selective Catalytic Reduction

In selective catalytic reduction, ammonia is reacted with the $NO_x$ to form $N_2$. No large temperature rise occurs for ordinary operating conditions, so no waste heat or steam is generated. The catalyst used in selective abatement units is platinum on a honeycomb support. Many catalytic systems are installed between the expander and the economizer heat exchanger, and operate at ambient pressure. This lack of pressure sensitivity is an advantage for retrofitting older low-pressure nitric acid plants. It is important to control the temperature between 483K and 543K (410F and 518F) because above 543K, ammonia may oxidize to form $NO_x$; below 483K, it may form ammonium nitrate.

Gulf Oil Chemicals is the main licensor of selective catalytic abaters in North America. They have eight systems onstream, and two more planned. Of these systems, nine operate at ambient pressure, and one operates at 590 kPa (86 psia). Many of these catalyst beds also use a molecular sieve for $NO_2$ adsorption to promote the reaction with ammonia.

Uhde licenses the BASF selective catalyst process and recommends it for tail gas treatment of 600 kPa (87 psig) nitric acid plants.

User experience with these processes has been good. Catalyst lifetimes of over 2 years have been reported, and expected lifetime is 5 to 10 years. Catalytic processes have also been used to supplement chilled absorption units when they have failed to meet emission limits.

6.1.3.5 Molecular Sieve Adsorption

The main equipment in a molecular sieve adsorption system is in the form of a two-section packed bed. The first section is packed with a desiccant, since the $NO_x$ adsorption sieve material works best on a dry gas. The second section contains the material which acts as nitrous oxide oxidation catalyst and $NO_x$ adsorber.

Figure 6-11 is a schematic of a molecular sieve system added to an existing nitric acid plant. $NO_x$ removal is accomplished in a fixed bed adsorption/catalyst system. The water-saturated nitric acid plant absorption tower overheat stream is chilled to 283K (50F), the exact temperature level being a function of the $NO_x$ concentration in the tail-gas stream. It is then passed through a mist eliminator to remove entrained water and acid mist. The condensed water, which absorbs some of the $NO_2$ in the tail gas to form a weak acid, is collected in the mist eliminator and either recycled to the absorption tower or sent to storage. The tail gas then passes through a molecular sieve bed where the special properties of the $NO_x$ removal bed material results in the catalytic conversion of nitric oxide (NO) to nitrogen dioxide ($NO_2$). This occurs in the presence of the low concentrations of oxygen typically present in the tail-gas stream. Nitrogen dioxide is then selectively adsorbed.

Regeneration is accomplished by thermally cycling (or swinging) the adsorbent/catalyst bed after it completes its adsorption step and while it contains a high adsorption loading of $NO_2$. An oil-fired heater is used to provide heat for regeneration. The required regenerator gas is obtained by using a portion of the treated tail-gas stream for desorption of the $NO_2$. This $NO_2$-loaded gas is recycled to the nitric acid plant absorption tower. The pressure drop in the molecular sieve averages 34 kPa (5 psi) and $NO_x$ outlet concentration averages 50 ppm (Reference 6-22).

This process has been applied to three plants in the United States (Reference 6-6). Tables 6-2 and 6-3 show the performance of the system at two installations. The commercial name for the process is the Purasiv N process. The unit at the 50 Mg/d (55 tons/day) acid plant of Hercules, Inc. started up in 1974. Abatement ranged from 95.9 to 98.7 percent averaged over individual cycles and was highest at the beginning of a cycle (Reference 6-23). The U.S. Army Holston Purasiv N unit was started up in August 1974, but has been inoperable for several years.

Both plants have dual-unit $NO_x$ adsorbers, operating on a 4 hour adsorption, 4 hour regeneration cycle (Reference 6-22). Initial reports on the operation were very favorable; the effluent standards were met, and the sieve showed no noticeable deterioration after 6 months. One sieve was damaged by accidental acid back-up, however, and did not achieve the expected 50 ppm outlet concentration.

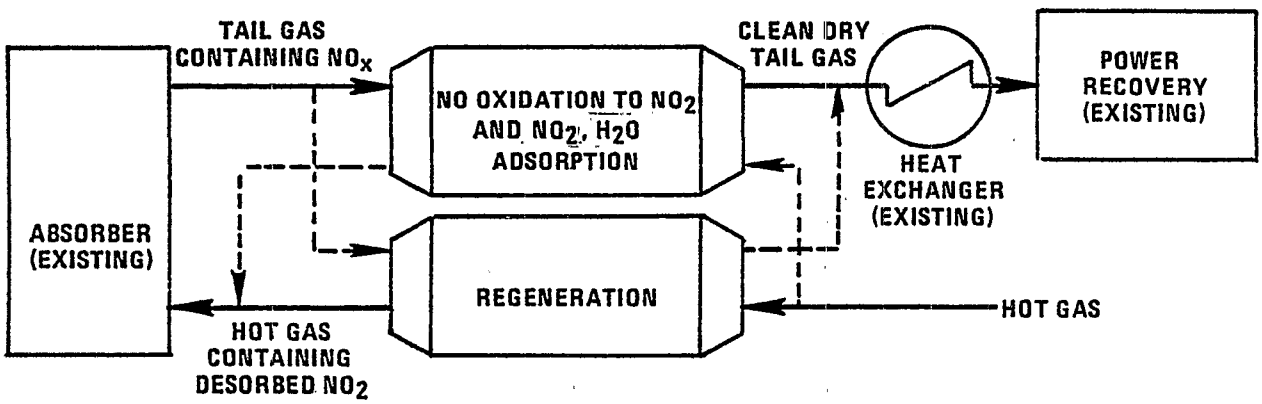


Figure 6-11. Molecular sieve system (Reference 6-22).

TABLE 6-2. PERFORMANCE OF HERCULES PURASIV N UNIT DURING THREE.DAY RUN (REFERENCE 6-24)

| | May 16 | May 27 | May 28 |
|---|---|---|---|
| $NO_x$ in Effluent | | | |
| Average, ppm | 2 | 2 | 5 |
| Range, ppm | 0-6 | 0-7 | 0-25 |
| $NO_x$ in Feed | | | |
| Average, ppm | 2,600 | 2,400 | 2,450 |
| Range, ppm | 2,000-3,000 | 2,300-2,500 | 2,300-2,500 |
| Average Gas Flow | | | |
| Tail gas flow, $Nm^3/s$[a] | 2.29 | 2.19 | 2.17 |
| Recycle gas flow, $Nm^3/s$ | 0.45 | 0.45 | 0.45 |
| Total gas flow, $Nm^3/s$ | 2.74 | 2.64 | 2.62 |

[a] $1 Nm^3/s = 2118.9$ scfm

TABLE 6-3. PERFORMANCE OF U.S. ARMY-HOLSTON PURASIV N UNIT DURING THREE DAY RUN (REFERENCE 6-24) (PLANT LARGELY DISMANTLED)

| | August 17 | August 18 | August 19 |
|---|---|---|---|
| $NO_x$ in Effluent | | | |
| Average, ppm | <1 | 6 | 7 |
| Range, ppm | 0-2 | 0-30 | 0-30 |
| $NO_x$ in Feed | | | |
| Average, ppm | 4,100 | 3,700 | 3,900 |
| Range, ppm | 3,000-5,700 | 3,500-4,400 | 2,500-4,700 |
| Average Gas Flow | | | |
| Tail gas flow, $Nm^3/s$[a] | 2.08 | 2.08 | 2.08 |
| Recycle gasflow, $Nm^3/s$ | 0.52 | 0.52 | 0.52 |
| Total gas flow, $Nm^3/s$ | 2.60 | 2.60 | 2.60 |

[a] 1 $Nm^3/s$ = 2118.9 scfm

The process has been successful in meeting emission standards. The principal criticisms have been high capital and energy costs, and the problems of coupling a cyclic system to a continuous acid plant operation. Furthermore, molecular sieves are not considered as state-of-the-art technology.

### 6.1.4 Costs

The most recent cost and energy utilization comparisons of the various abatement processes are given in Tables 6-4 and 6-5 (Reference 6-6, 1975 costs). Direct comparison of these data is rather difficult since not all the side effects, such as changes in plant yield, and the degree of abatement, are described.

#### Chilled Absorption

The cost figures in Table 6-4 for the CDL/VITOK process are in agreement with data provided by Reference 6-25 (1976 costs). According to Reference 6-10, the bottom line costs for the chilled absorption process used by the TVA is $2.09/Mg ($1.90/ton) of acid, which includes $0.14/Mg ($0.13/ton) credit for additional product, 8 kWh and 85 kg steam per Mg acid (170 lb/ton). This cost is higher than the $1.74 Mg ($1.58/ton) given in Table 6-4 and does not include the reduction in capacity caused by the reduction in the nitric acid concentration.

#### Extended Absorption

The Grande Paroisse process is capital intensive; therefore, costs may be dominated by the assumptions made to calculate return on investment and depreciation. The figures in Table 6-4 reflect a 20 percent return on capital. The Grande Paroisse literature shows a cost of $0.98 to $1.13 per Mg ($0.89 to $1.03/ton) but does not consider a return on investment cost.

Even with high capital cost and unfavorable cost of capital, extended absorption is competitive with other processes. It has low maintenance costs and low energy requirements.

#### Wet Chemical Scrubbing

The economics and energy use of two wet scrubbing processes, MASAR, urea scrubbing, and Goodpasture, ammonia scrubbing, are given in Tables 6-4 and 6-5. Costs for the Norsk Hydro process would be similar if applied to a new plant. Capital costs for the Goodpasture process are estimated as $425,000 for a 270 Mg/d (300 tons/day) plant (Reference 6-26). No costs estimates are available for potassium permanganate and caustic scrubbing since they are not in general use.

TABLE 6-4. CAPITAL AND OPERATING COSTS FOR DIFFERENT $NO_x$ ABATEMENT SYSTEMS IN A 270 Mg/d NITRIC ACID PLANT (References 6-6 and 6-26)[a]

| | Catalyst Reduction | Molecular Sieve | Grande Paroisse | CDL/ Vitok | Masar | Goodpasture |
|---|---|---|---|---|---|---|
| Capital Investment,[b] ($) | 1,384,000 | 1,200,000 | 1,000,000 | 575,000 | 663,000 | 425,000 |
| Royalty | -- | -- | Included | None | Fee | 51,000 |
| Operating Labor, (hr/yr) | 360 | 360 | 360 | 360 | 360 | 360 |
| ($/yr) | 2,200 | 2,200 | 2,200 | 2,200 | 2,200 | 2,200 |
| Maintenance Labor, | 315 | 315 | 315 | 315 | 315 | 315 |
| ($/yr) | 2,200 | 2,200 | 2,200 | 2,200 | 2,200 | 2,200 |
| Labor Overhead (incl. fringe benefits & supervision, $/yr) | 4,400 | 4,400 | 4,400 | 4,400 | 5,975 | 4,400 |
| Catalyst or Molecular Sieve | 77,800 | 45,600 | -- | -- | -- | -- |
| Cooling Water, (l/min) | -- | 1,892 | 1,135 | 3,861 | -- | 114 |
| ($/yr) | -- | 7,330 | 4,420 | 14,980 | -- | 440 |
| Steam, (kg/hr) | (7,182) | 113 | -- | 324 | 594 | -- |
| ($/yr credit) | (387,590) | 6,120 | -- | 17,500 | 32,070 | -- |
| Electricity, (kWh) | 128 | 322 | 90 | 265 | 20 | 45 |
| ($/yr) | 20,890 | 52,550 | 14,690 | 43,250 | 3,260 | 7,340 |
| Boiler Feed Water, (l/min) | 132 | | | | | -- |
| ($/yr) | 12,650 | -- | -- | -- | -- | -- |
| Fuel, MW | 8.3 | 0.6 | -- | -- | -- | -- |
| ($/yr) | 465,120 | 32,640 | -- | -- | -- | -- |
| Nitric Acid, (Mg/day) | -- | (6.0) | (5.4) | (5.4) | (4.8) | -- |
| ($/yr) | -- | (112,200) | (102,000) | (102,000) | (89,760) | -- |
| Urea, (Mg/day) | -- | -- | -- | -- | 1.24[c] | -- |
| ($/yr) | | | | | 74,528 | -- |
| Ammonium Nitrate, (Mg/day) | | | | | (1.13) | (11.8) |
| ($/yr) | | | | | (24,500) | (422,000) |
| Depreciation (11-yr. life) | 125,900 | 109,090 | 90,910 | 52,300 | 60,300 | 38,640 |
| Return on Investment (@ 20%) | 276,800 | 240,000 | 200,000 | 115,000 | 132,600 | 85,000 |
| Taxes & Insurance (@ 2%) | 27,700 | 24,000 | 20,000 | 11,500 | 13,260 | 8,500 |
| Total Annual Cost, ($/yr) | 628,270 | 413,930 | 236,780 | 161,330 | 195,708 | (42,290) |
| Annual Cost, ($/Mg) | 6.79 | 4.48 | 2.56 | 1.74 | 2.12 | (0.46) |

[a]This table is given in Appendix A in English units.

[b]Investment estimates exclude interest during construction, owners expenses, and land costs.

[c]Include credit for 0.0017 Mg of urea/Mg of nitric acid produced present in the spent solution (D.SITPD).

[d]Parenthesis indicate credit taken.

TABLE 6-5. ANNUAL ENERGY REQUIREMENTS (TJ) FOR $NO_x$ ABATEMENT SYSTEMS FOR A 270 Mg/d NITRIC ACID PLANT (Reference 6-6 and 6-26)[a]

| | Basic Nitric Acid Plant | Catalyst Reduction | Molecular Sieve | Grande Paroisse | CDL/ Vitok | Masar | Goodpasture |
|---|---|---|---|---|---|---|---|
| Steam (Credit) | (75.2) | (136.18) | 2.15 | - | 6.14 | 11.27 | - |
| Electrical | - | 11.56 | 29.08 | 8.13 | 23.94 | 1.80 | 1.38 |
| Natural Gas | 172.0 | 245.12 | - | - | - | - | - |
| Oil | - | - | 17.20 | - | - | - | - |
| | 96.8 | 108.94 | 48.43 | 8.13 | 30.08 | 13.07 | 1.38 |

[a]This table is given in Appendix A in English units.

TABLE 6-6. BASIS FOR TABLES 6-4 AND 6-5 (Reference 6-6)[a]

(Plant Capacity 270 Mg/day and 92 Gg/yr)

(March 1975 Dollars, ENR Index = 2.126)

| | | |
|---|---|---|
| 1. | Operating Labor | @ $6.1/hr |
| 2. | Maintenance Labor | @ $7.0/hr |
| 3. | Overhead | @ 100% of labor (including fringe benefits and supervision) |
| 4. | Cooling Water | @ $0.008/1000 l |
| 5. | Boiler Feedwater | @ $0.20/1000 l |
| 6. | Natural Gas | @ $1.90/GJ |
| 7. | Oil | @ $1.90/GJ |
| 8. | Depreciation | @ 11 yr straight line |
| 9. | Return on Investment | @ 20% of capital cost |
| 10. | Taxes and Insurance | @ 2% of capital cost |
| 11. | Nitric Acid | @ $ 99/Mg |
| 12. | Urea | @ $176/Mg |
| 13. | Ammonium Nitrate | @ $110/Mg |
| 14. | 1 kWh = 11.07 MJ | |
| 15. | Electricity | @ $0.02/kWh |
| 16. | Ammonia | @ $173/Mg |

[a]This table is given in Appendix A in English units.

Capital and operating costs for these processes are very low and are aided by credit for the byproducts (ammonium nitrate). In the Goodpasture process approximately 75 percent of the ammonia is reclaimed as ammonium nitrate.

Catalytic Reduction

The cost and energy data given in Tables 6-4 and 6-5 are for a natural gas-fired nonselective catalytic reduction unit. The process is considerably more expensive than the other processes. Not only does a catalytic combustor have a high capital cost, but fuel costs are large (and will probably increase).

Costs for selective catalytic reduction are not included in Table 6-4. Capital costs are estimated as $100,000 to $125,000 for a 270 Mg per day unit by Gulf (Reference 6-27, 1976 costs). Operating and maintenance costs are expected to be low except possibly for catalyst replacement. The major operating expense is the cost of ammonia for reaction with $NO_x$.

Molecular Sieve

Both capital and operating costs for the molecular sieve process are high. Fuel for the regeneration phase, high maintenance costs, and catalyst replacement are the primary contributors to the operating costs. Not included in the cost figures are any extra costs which may result from upsets or process alterations in the nitric acid plant as a result of the cyclic operation of the abatement unit.

## 6.2 NITRIC ACID USES

Important uses of nitric acid and the estimated quantities consumed in each are listed in Table 6-7. Approximately 65 percent of the nitric acid produced in the United States is consumed in making ammonium nitrate, of which approximately 80 percent is used for fertilizer manufacturing. Adipic acid manufacture, the second largest use, consumes only about 7 percent. Other uses include metal pickling and etching, nitrations and oxidations of organic compounds, and production of metallic nitrates.

### 6.2.1 Ammonium Nitrate Manufacture

#### 6.2.1.1 Process Description

Ammonium nitrate is produced by the direct neutralization of nitric acids with ammonia:

$$NH_3 + HNO_3 \rightarrow NH_4NO_3 \qquad (6\text{-}10)$$

TABLE 6-7. ANNUAL NITRIC ACID CONSUMPTION IN THE UNITED STATES, 1974 (Reference 6-3 and 6-6)

| Product | Quantity of HNO, used in manufacture | |
|---|---|---|
| | Gg | $10^3$ tons |
| Ammonium Nitrate | 4830 | 5324 |
| Adipic Acid | 520 | 573 |
| Nitrobenzene | 74 | 82 |
| Potassium Nitrate | 37 | 40 |
| Miscellaneous Fertilizers | 371 | 409 |
| Military, other than $NH_4NO_3$ | 258 | 286 |
| Isocynates | 111 | 122 |
| Steel Pickling | 37 | 41 |
| Other | 1193 | 1315 |
| Total Nitric Acid Production | 7431 | 8192 |

About 735 kg (1600 lb) of nitric acid (100 percent equivalent) and 190 to 205 kg (420 to 450 lb) of anhydrous ammonia are required to make 909 kg (1 ton) of ammonium nitrate. In actual practice, 100 percent nitric acid is not used, and typical feed acid contains 55 to 60 percent $HNO_3$. The product is an aqueous solution of ammonium nitrate, which may be used as liquid fertilizer or converted into a solid product. The heat of reaction is usually used to evaporate part of the water, giving typically a solution of 83 to 86 percent ammonium nitrate. Further evaporation to a solid may be accomplished in a falling-film evaporator (Reference 6-28), in a disk-spraying plant (Reference 6-29), or by evaporation to dryness in a raked shallow open pan (graining). The graining process is no longer used due to hazardous conditions.

A majority of the solid ammonium nitrate produced in the United States is formed by "prilling", a process in which molten ammonium nitrate flows in droplets from the top of a tower countercurrent to a rising stream of air, which cools and solidifies the melt to produce pellets or prills (Reference 6-3).

#### 6.2.1.2 Emissions

No significant amount of $NO_x$ is produced in this process; the most likely source of nitric acid emissions would be the neutralizer. The vapor pressure of ammonia, however, is much higher than the vapor pressure of nitric acid, and the release of nitric acid fumes or $NO_x$ is believed to be negligible (Reference 6-30), especially since a slight excess of $NH_3$ is used to reduce product decomposition.

### 6.2.2 Organic Oxidations

#### 6.2.2.1 Process Description

Nitric acid is used as an oxidizing agent in the commercial preparation of adipic acid, terephthalic acid, and other organic compounds containing oxygen. The effective reagent is probably $NO_2$, which has very strong oxidizing power.

Adipic acid ($COOH \cdot (CH_2)_4 \cdot COOH$) is a di-basic acid used in the manufacture of synthetic fibers. It is an odorless white crystalline powder which is manufactured by the catalytic oxidation of cyclohexane, with cyclohexanone and cyclohexanol as intermediates. About 618 Gg (681,000 tons) of adipic acid were manufactured in 1975 (Reference 6-31). Approximately 90 percent of adipic acid is consumed in the manufacture of nylon 6/6.

In the United States, adipic acid is made in a two-step operation. The first step is the catalytic oxidation of cyclohexane by air to a mixture of cyclohexanol and cyclohexanone. In the

second step, adipic acid is made by the catalytic oxidation of the cyclohexanol/cyclohexanone mixture using 45 to 55 percent nitric acid. The product is purified by crystallization (Reference 6-32). The whole operation is continuous. The chemistry of the reactions in the two steps is:

$$\text{cyclohexanone} + \text{nitric acid} \rightarrow \text{adipic acid} + NO_x + H_2O \qquad (6\text{-}11)$$

$$\text{cyclohexanol} + \text{nitric acid} \rightarrow \text{adipic acid} + NO_2 + H_2O \qquad (6\text{-}12)$$

The main nitrogen compounds formed in the above reactions are NO, $NO_2$, and $N_2O$. The dissolved oxides are stripped from the adipic acid/nitric acid solution with air and steam. The NO and $NO_2$ are recovered by absorption in nitric acid. The off-gas from the $NO_x$ absorber is the major contributor to $NO_x$ emissions from the adipic acid manufacturing process.

Nitric acid is used for the oxidation of other organic compounds in addition to the adipic acid, but none approaches the adipic acid product volume.

Terephthalic acid is an intermediate in the production of polyethylene terephthalate, which is used in polyester, films, and other miscellaneous products. Terephthalic acid can be produced in various ways, one of which is by the oxidation of paraxylene by nitric acid (Reference 6-33). In 1970, the process was used for about a third of terephthalic acid production and accounted for approximately 20 percent of $NO_x$ emissions from nitration processes. Since 1975, however, the use of nitric acid as a feedstock in the production of terephthalic acid has been discontinued (Reference 6-34). No $NO_x$ is now generated in terephthalic acid plants.

### 6.2.2.2 Emissions

The off-gases leaving the adipic acid reactor after nitric acid oxidation of organic materials may contain as much as 30 percent $NO_x$ before processing for acid recovery (Reference 6-35). One of the principal compounds of the off gas, $N_2O$, is not counted as $NO_x$, since it is not oxidized to $NO_x$ in the atmosphere and is considered harmless. The seven adipic acid manufacturing plants in the United States generated about 14.5 Gg (16,100 tons) of $NO_x$ in 1975 (Reference 6-31) from a total acid production of 618 Gg (681,000 tons). This gives an average emission factor of 23.7 kg $NO_2$/Mg (47.4 lb $NO_2$/ton) compared to the nominal value 6 kg $NO_2$/Mg (12.0 lb $NO_2$/ton) specified by AP-42 (Reference 6-36).

### 6.2.2.3 Control Techniques

In commercial operations, economy requires the recovery of $NO_x$ as nitric acid. It is recovered by mixing the off-gas with air and sending the stream to an absorbing tower, where nitric acid is recovered as the stream descends and unrecoverable $N_2O$ and nitrogen pass off overhead.

If the resulting emission rates are too high, further reduction could be attempted by standard techniques such as extended absorption or wet chemical scrubbing. These techniques are described in Section 6.1.3. A potential, long-range control for eliminating $NO_x$ from organic oxidation processing is the replacement of nitric acid as an oxidant by catalytic processes using air oxygen. The laboratory catalytic oxidation of cyclohexanol and cyclohexanone by air to adipic acid has also been reported, but no commercial process is known (Reference 6-37).

#### 6.2.2.4 Costs

Economy requires that nitric acid be recovered from reactor off-gas in large-scale organic oxidations using nitric acid as the oxidizing agent. For example, the incentive for acid recovery for a 270 Mg/d (300 tons/day) adipic acid plant would be about $\$2.48 \times 10^6$ per year. This figure is based on recovering 0.3 kg of $HNO_3$ per kg of adipic acid at a nitric acid cost of \$8.6 per 100 kg (Reference 6-38). The optimum economic recovery level depends upon economic factors at each installation.

### 6.2.3 Organic Nitrations

#### 6.2.3.1 Process Description

Nitration is the treating of organic compounds with nitric acid (or $NO_2$) to produce nitro compounds or nitrates. The following equations illustrate the two most common types of reaction:

$$RH + HONO_2 \rightarrow RNO_2 + H_2O \qquad (6\text{-}13)$$

$$ROH + HONO_2 \rightarrow RONO_2 + H_2O \qquad (6\text{-}14)$$

Examples of products of the first reaction (C-nitration) are compounds such as nitrobenzene, nitrotoluenes, and nitromethane. Nitroglycerin (or glycerin trinitrate) and nitrocellulose are examples of compounds produced by the second reaction (O-nitration).

Nitrating agents used commercially include nitric acid, mixed nitric and sulfuric acids (mixed acids), and $NO_2$. Mixed nitric and sulfuric acid is most frequently used. The sulfuric acid functions to promote formation of $NO_2^+$ ions and to absorb the water produced in the reaction.

Nitrations are carried out in either batch or continuous processes. The trend is toward continuous processes, since control is more easily maintained, equipment is smaller, system holdup is smaller, and hazards are reduced. A multiplicity of specialty products such as dyes and drugs, which are produced in small volumes, will continue, however, to be manufactured by small batch nitrations.

Batch nitration reactors are usually covered vessels provided with stirring facilities and cooling coils or jackets. The reactor bottom is sloped, and product is withdrawn from the lowest point. When products are potentially explosive, a large tank containing water (drowning tank) is provided so that the reactor contents can be discharged promptly and "drowned" in case of abnormal conditions.

When the reaction is completed, the reactor contents are transferred to a separator, where the product is separated from the spent acid. The product is washed, neutralized, and purified; spent acids are processed for recovery. Figure 6-12 illustrates a batch nitration process for manufacturing nitroglycerin (Reference 6-39).

Continuous nitration for nitroglycerin is carried out in many types of equipment. Two widely employed processes are the Schmid-Meissner process (illustrated in Figure 6-13) and the Biazzi process (illustrated in Figure 6-14). Both processes provide for continuous reaction, separation, water washing, neutralization, and purification. The Biazzi process makes greater use of impellers for contacting than the Schmid-Meissner, which uses compressed air to provide agitation during washing and neutralizing. Both types of equipment can be used for nitrating in general.

When mixed acid is used, the spent acid is recovered in a system similar to that shown in Figure 6-15. The mixed acid enters the top of the denitrating tower. Superheated steam is admitted at the bottom to drive off the spent nitric acid and $NO_x$ overhead. The gases are passed through a condenser to liquefy nitric acid, which is withdrawn to storage; the uncondensed gases are then sent to an absorption tower. Weak sulfuric acid is withdrawn from the bottom of the denitrator tower and concentrated or disposed of by some convenient arrangement.

When nitric acid alone is used for nitration, the weak spent acid is normally recovered by sending it to an absorption tower, where it replaces some of the water normally fed as absorbent.

Nitrobenzene and dinitrotoluenes are produced in large volumes as chemical intermediates. Explosives such as TNT, nitroglycerin, and nitrocellulose are produced in significant but lesser volumes.

Nitrobenzene is manufactured in both continuous and batch nitration plants. Mixed acids containing 53 to 60 percent $H_2SO_4$, 32 to 39 percent $HNO_3$, and 8 percent water are used in batch operations, which may process 3.785 $m^3$ (1000 gallons) to 5.678 $m^3$ (1500 gallons) of benzene in 2 to 4 hours. Continuous plants, as typified by the Biazzi units (Figure 6-14) also use mixed acids.

The major use of nitrobenzene is in the manufacture of aniline. It is also used as a solvent. Nitrobenzene production in 1970 was an estimated 188 Gg (207,500 tons). Nitric acid requirements

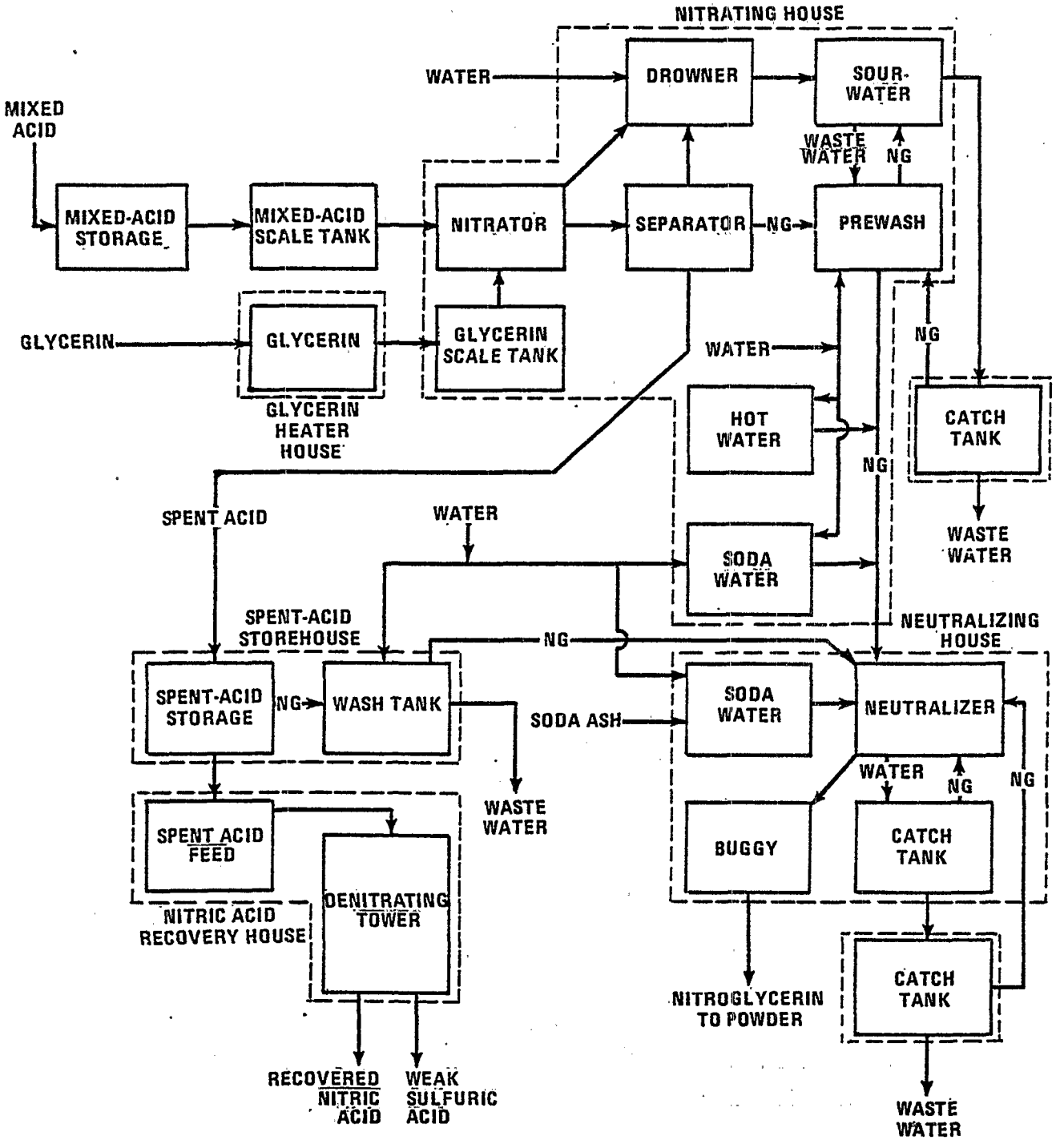


Figure 6-12. Batch process for the manufacture of nitroglycerin (NG) (Reference 6-39).

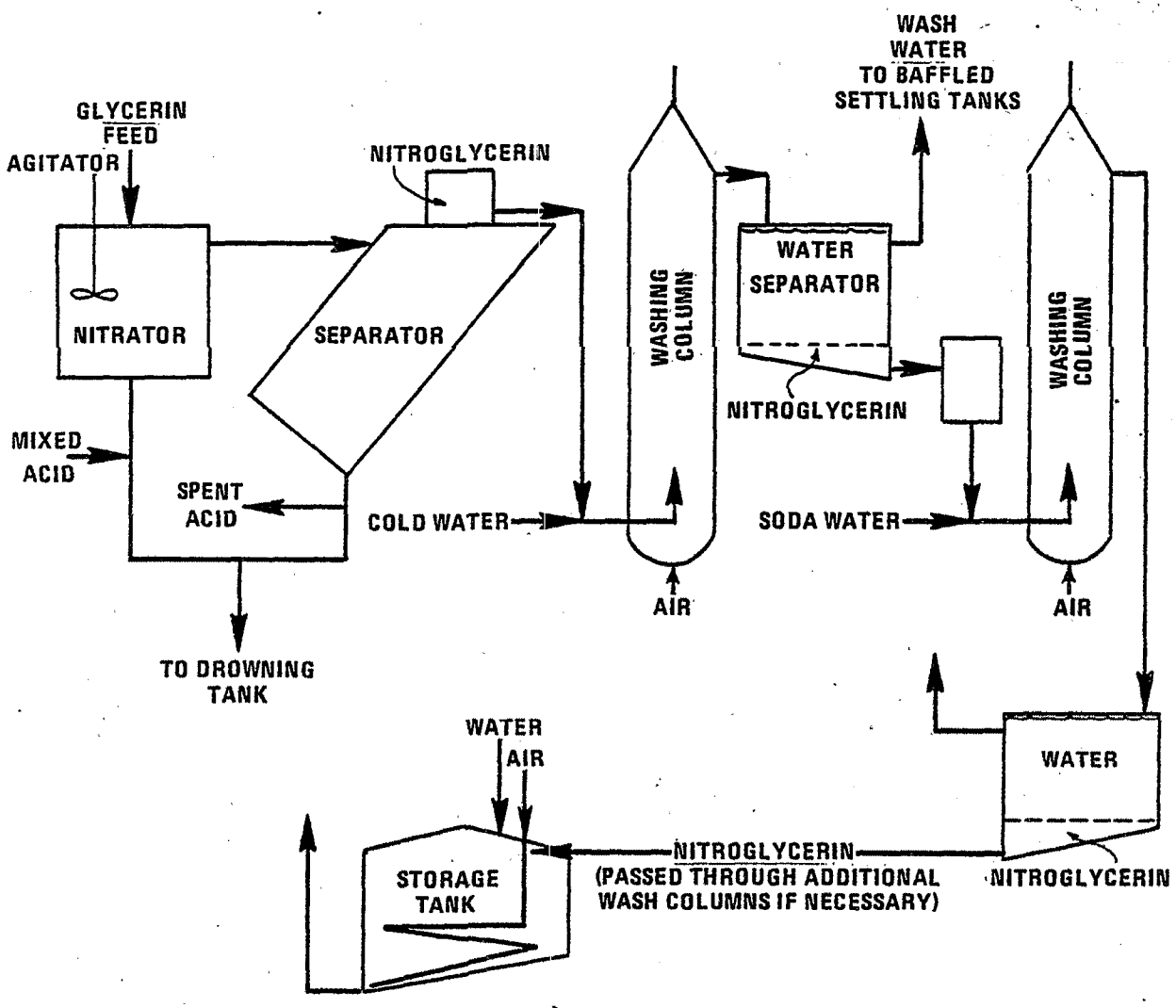


Figure 6-13. Schmid-Meissner continuous-nitration plant (Reference 6-39).

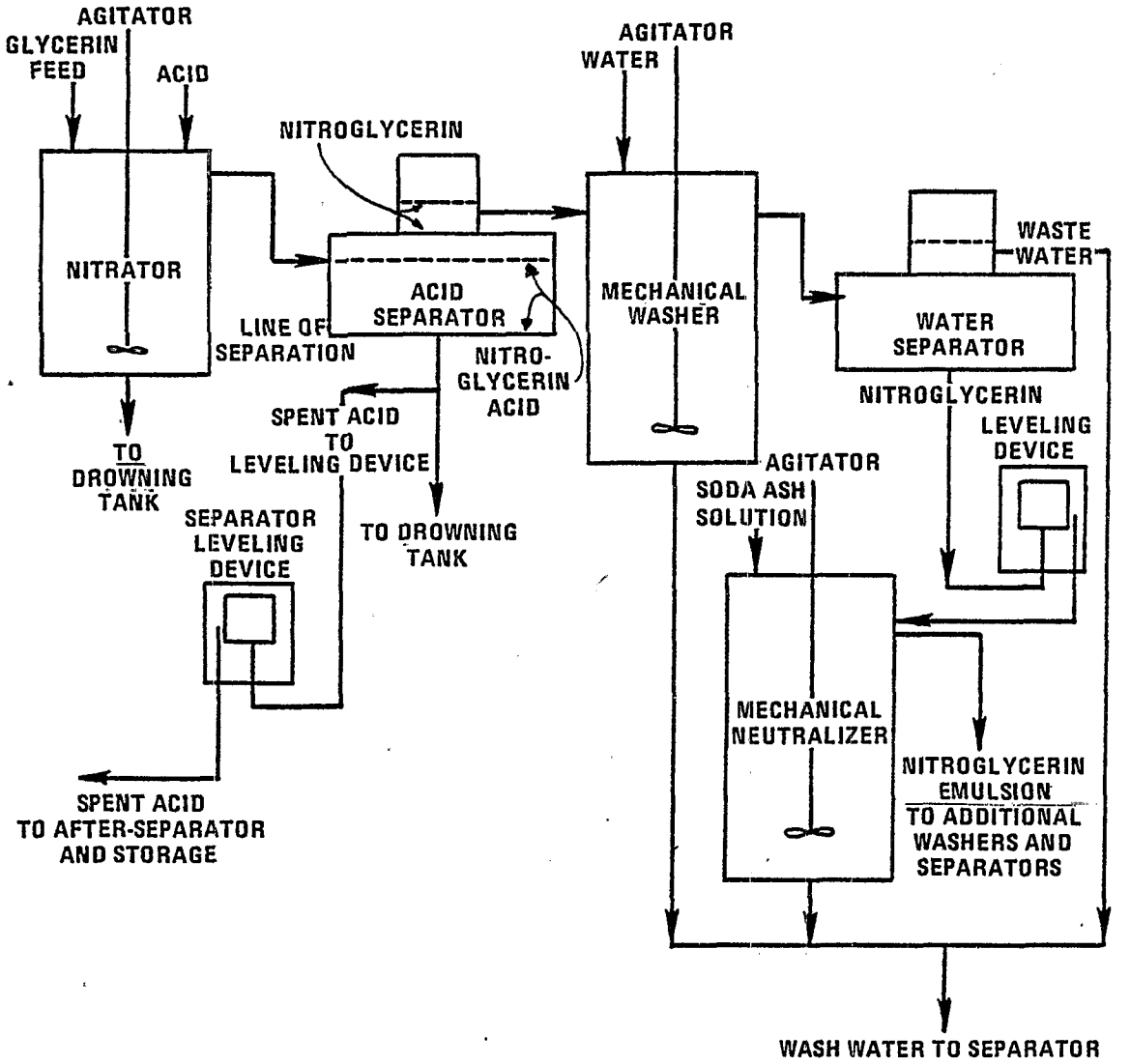


Figure 6-14. Biazzi continuous-nitration plant (Reference 6-39).

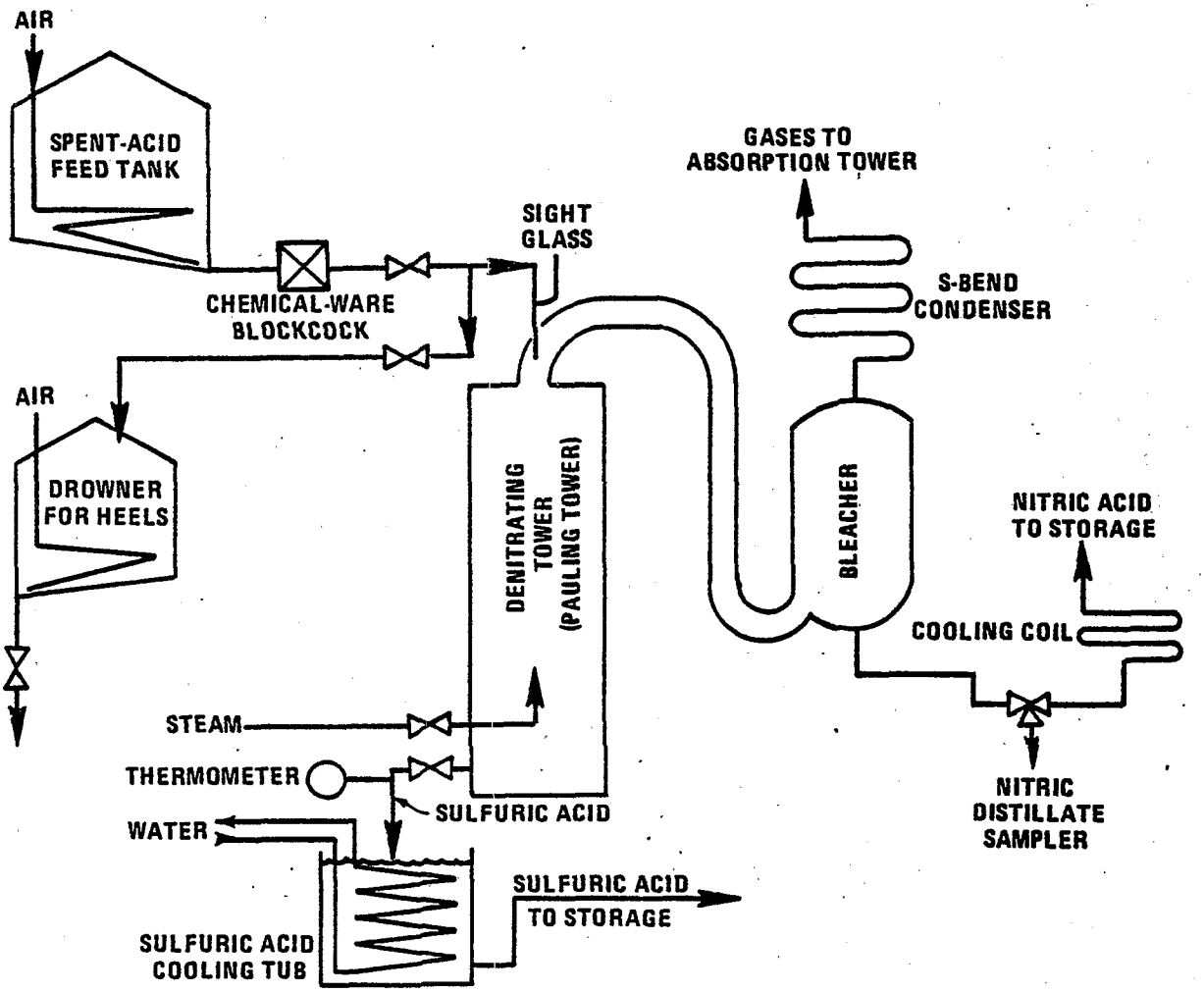


Figure 6-15. Recovery of spent acid (Reference 6-39).

are approximately 0.54 kg per kg of nitrobenzene (Reference 6-39). On this basis, nitric acid used in nitrobenzene synthesis was estimated at 126 Gg (139,000 tons) for 1970.

Dinitrotoluene is manufactured in two stages in both continuous and batch units. The first stage is the nitration of toluene to mononitrotoluene, which is nitrated to dinitrotoluene in the second stage. For making mononitrotoluene in the batch process, mixed acid consisting of 28 to 32 percent $HNO_3$, 52 to 56 percent $H_2SO_4$, and 12 to 20 percent water is used in equipment sized to handle up to 11.4 $m^3$ (3000 gallons). Operating temperature ranges from 298K (77F) to 313K (104F). Mononitrotoluene yields of 96 percent are typical (Reference 6-40). The second step, the production of dinitrotoluene, is carried out separately because it requires more severe conditions.

Dinitrotoluene is made from mononitrotoluene using stronger mixed acid containing 28 to 32 percent $HNO_3$, 60 to 64 percent $H_2SO_4$, and 5 to 8 percent water. Temperatures are increased to 363K (194F) after all the acid has been added. Dinitrotoluene yields are about 96 percent of theoretical (Reference 6-41).

The principal use of dinitrotoluene is as intermediate in making toluene diisocyanate (TDI) for use in polyurethane plastics. It is usually supplied as mixtures of the 2,4 and 2,6 isomers.

6.2.3.2 Emissions

Relatively large $NO_x$ emissions may originate in nitration reactors and in the denitration of the spent acid. $NO_x$ is also released in auxiliary equipment such as nitric acid concentrators, nitric acid plants, and nitric acid storage tanks.

Nitration reactions <u>per se</u> do not generate $NO_x$ emissions. $NO_x$ is formed in side reactions involving the oxidation of organic materials. Relatively little oxidation and $NO_x$ formation occur when easily nitratable compounds, such as toluene, are processed. Much more severe conditions are required in processing compounds that are difficult to nitrate, such as dinitrotoluene; more oxidation takes place and, thus, more $NO_x$ is formed.

Limtied data are available on actual $NO_x$ emissions from nitrations. For continuous nitrations, one company has reported emissions of 0.06 to 0.12 kg $NO_2$ per Mg of nitric acid (0.12 to 0.24 lb/ton), with a mean of 0.09 kg $NO_2$/Mg (0.18 lb/ton) at a single location (Reference 6-40). At the same location, emissions averaging 7 kg of $NO_2$ per Mg of acid were reported in manufacturing specialty products in small batch-type operations. According to Reference 6-42, 0.25 kg of $NO_2$ per Mg of nitric acid (0.5 lb/ton) are generated in the production of nitrobenzene. In the manufacture of dinitrotoluence, 0.135 kg of $NO_2$ is estimated to be generated for every Mg of nitric acid used (0.27 lb/ton).

Using the Reference 6-42 emission factors as a lower limit, and 7 kg $NO_x$ per Mg $HNO_3$ (14 lb/ton), (Reference 6-40) as upper limits for nitrations, the $NO_x$ emissions in 1970 would have the range indicated in Table 6-8. Even using the upper limit, $NO_x$ emissions from nitrobenzene and dinitrotoluene synthesis are relatively small but may present local nuisance problems. Since the upper limit represents specialty batch operations on a small scale, the emissions are probably much higher than would be encountered in large volume production of these products in either batch or continuous equipment.

6.2.3.3 Control Techniques

In large batch or continuous nitrations, operations are carried out in closed reactors. Fumes are conducted from the reactor, air is added, and the mixture enters an absorption tower for recovery of nitric acid. If too much $NO_2$ remains in the residual gas from the absorber, it may be further reduced by techniques such as wet chemical scrubbing. Details of the control techniques are discussed in Section 6.1.3.

Noncondensable gas from acid denitration is treated in the same manner as reactor gas. A common absorber is sometimes employed.

Small batch nitrators used in manufacturing specialties such as drugs and dyes are small-volume, high-intensity $NO_x$ emitters. In one plant, reaction times ranged from 3 to 12 hours, depending on the product made. From 3 to 850 batches of each product were made each year. Emissions ranged from 0.7 to 130 kg of $NO_x$ per Mg of nitric acid (0.14 to 260 lb/ton) with a median of 21 kg per Mg of nitric acid (21 lb/ton). The median emission was 7 kg per Mg (14 lb/ton) when one product was excluded from the calculations. The emissions, which are vented in individual stacks, are brown in color for a few hours per batch.

Caustic scrubbing and $NO_x$ incineration are regarded as the most plausible controls for specialty batch nitrations. Catalytic reduction is usually ruled out because of organic and other impurities in the gas. Neither control is considered highly efficient in this application.

The intermittent character of emissions makes them difficult to control and contributes to very high pollution abatement costs per ton of nitric acid consumed. According to DuPont, operating costs for such equipment would render approximately half of the small batch nitrations so uneconomical that the manufacture of these products would be terminated (Reference 6-40). Large batches may be suitable for conversion to continuous operating, but small batches are not.

TABLE 6-8. ESTIMATED $NO_x$ EMISSIONS FROM ORGANIC NITRATIONS IN 1970 (REFERENCE 6-42).

| Product | 1970 Production Mg (tons) | Estimated $HNO_3$ consumption Mg (tons) | $NO_x$ Emissions Mg (tons) | |
|---|---|---|---|---|
| | | | Lower limit | Upper limit |
| Nitrobenzene | 233,600 (257,000) | 126,099 (139,000) | 883 (973) | |
| Dinitrotoluene | 131,542 (145,000) | 101,151 (111,500) | 708 (780) | |

6.2.3.4 Costs

Fume incinerator investments are quoted at $10,000 to $20,000 by one source (Reference 6-43, 1966 costs). Another suggests that investments of $75,000 to $150,000 are necessary for flame abatement facilities for existing small batch nitrators and $75,000 to $250,000 for existing large nitrators. Annual operating costs were estimated at $25,000 to $85,000 per product for small batch nitrators and $25,000 to $40,000 for continuous nitrators (Reference 6-40).

## 6.2.4 Explosives: Manufacture and Use

### 6.2.4.1 Process Description

An explosive is a material that, under the influence of thermal or mechanical shock, decomposes rapidly and spontaneously with the evolution of large amounts of heat and gas. Explosives fall into two major categories: high (industrial) explosives and low explosives.

Industrial explosives in the United States consist of over 80 percent by weight of ammonium nitrate and some 10 percent of nitro organic compounds. During 1975, an estimated 1.4 Tg ($3.1 \times 10^9$ pounds) of industrial explosives were manufactured, which is about 13 percent higher than the 1974 productions (Reference 6-44). High explosives are less sensitive to mechanical or thermal shock, but explode with great violence when set off by an initiating explosive (Reference 6-45). Low explosives, such as nitrocellulose, undergo relatively slow autocombustion when set off and evolve large volumes of gas in a definite and controllable manner.

Production and consumption data for military explosives are classified. Some of the more important ingredients in military explosives are known, however: trinitrotoluene (TNT), pentaerythritol tetranitrate (PETN), cyclotrimethylene-tri-nitramine (RDX), and trinitrophenylmethylnitramine (Tetryl). Nitration is an essential step in the manufacture of each of these.

PETN is most commonly used in conjunction with TNT in the form of pentolites, made by incorporating PETN into molten TNT. RDX is used in admixture with TNT, or compounded with mineral jelly to form a useful plastic explosive. Tetryl is most often used as a primer for other less sensitive explosives.

TNT (symmetrical trinitrotoluene) may be prepared by either a continuous process or a batch, three-stage nitration process using toluene, nitric acid, and sulfuric acid as raw materials. In the batch process, a mixture of oleum (fuming sulfuric acid) and nitric acid that has been concentrated to a 97 percent solution is used as the nitrating agent. The overall reaction may be expressed as:

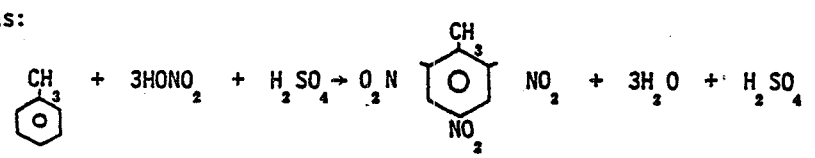


(6-15)

Spent acid from the nitration vessels is fortified with makeup 60 percent nitric acid before entering the next nitrator. Fumes from the nitration vessels are collected and removed from the exhaust by an oxidation-absorption system. Spent acid from the primary nitrator is sent to the acid recovery system in which the sulfuric and nitric acid are separated. The nitric acid is recovered as a 60 percent solution, which is used for refortification of spent acid from the second and third nitrators. Sulfuric acid is concentrated in a drum concentrator by boiling water out of the dilute acid. The product from the third nitration vessel is sent to the wash house at which point asymmetrical isomers and incompletely nitrated compounds are removed by washing with a solution of sodium sulfite and sodium hydrogen sulfite (Sellite). The wash waste (commonly called red water) from the purification process is discharged directly as a liquid waste stream, is collected and sold, or is concentrated to a slurry and incinerated in rotary kilns. The purified TNT is solidified, granulated, and moved to the packing house for shipment or storage. A schematic diagram of TNT production by the batch process is shown in Figure 6-16.

Nitrocellulose is prepared by the batch-type "mechanical dipper" process. Cellulose, in the form of cotton linters, or specially prepared wood pulp, is purified, bleached, dried, and sent to a reactor (niter pot) containing a mixture of concentrated nitric acid and a dehydrating agent such as sulfuric acid, phosphoric acid, or magnesium nitrate. The overall reaction may be expressed as:

$$C_6H_7O_2(OH)_3 + 3HONO_2 + H_2SO_4 \rightarrow C_6H_7O_2(ONO_2)_3 + 3\ H_2O + H_2SO_4 \qquad (6\text{-}16)$$

When nitration is complete, the reaction mixtures are centrifuged to remove most of the spent acid. The spent acid is fortified and reused or otherwise disposed. The centrifuged nitrocellulose undergoes a series of water washings and boiling treatments for purification of the final product.

### 6.2.4.2 Emissions

The major emissions from the manufacture of explosives are nitrogen oxides and nitric acid mists. Emissions of nitrated organic compounds may also occur from many of the TNT process units. In the manufacture of TNT, vents from the fume recovery system, and nitric acid concentrators are the principal sources of emissions. Emissions may also result from the production of Sellite solution and the incineration of "red water". Many plants now sell the red water to the paper industry where it is of economic importance.

Principal sources of emissions from nitrocellulose manufacture are from the reactor pots and centrifuges, spent acid concentrators, and boiling tubs used for purification.

The most important factor affecting emissions from explosives manufacture is the type and efficiency of the manufacturing process. The efficiency of the acid and fume recovery systems for

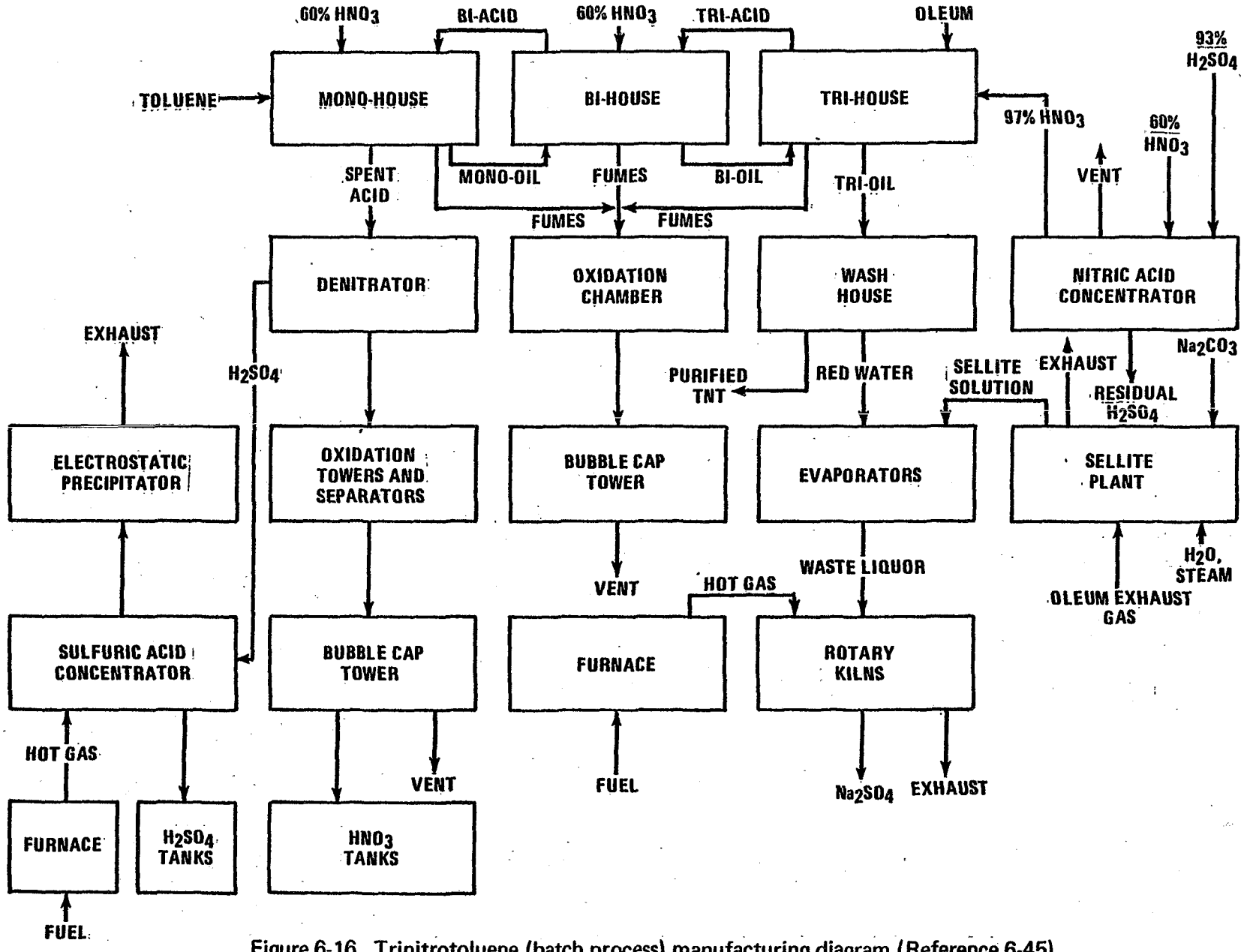


Figure 6-16. Trinitrotoluene (batch process) manufacturing diagram (Reference 6-45).

TNT manufacture will directly affect the atmospheric emissions. In addition, the degree to which acids are exposed to the atmosphere during the manufacturing process affects the $NO_x$ emissions. For nitrocellulose production, emissions are influenced by the nitrogen content and the desired quality of the final product. Operating conditions will also affect emissions. Both TNT and nitrocellulose are produced in batch processes. Consequently, the processes may never reach steady state and emission concentrations may vary considerably with time. Such fluctuations in emissions will influence the efficiency of control methods. Table 6-9 presents the emission factors for the manufacture of explosives and the effects of various control devices upon emissions (Reference 6-45). Although the manufacture of explosives is a very small source of $NO_x$ emissions nationwide, explosions could be an intense source in confined underground spaces. Precautions should be taken to avoid chronic exposure.

#### 6.2.4.3 Controls

Explosives manufactured by the commercial industry use ammonium nitrate extensively as the base material. The ammonium nitrate production process is reviewed in Section 6.2.1. Nearly half the plants use the catalytic reduction technique for control of $NO_x$ emissions.

The military explosives which are produced in large amounts include nitroglycerin, nitrocellulose, TNT, and RDX. The molecular sieve abatement system is used at Holston Army Ammunition Plant in Kingsport, Tennessee. Another Army Ammunition Plant at Radford, Virginia, is constructing two molecular sieve units to treat vent gas streams from their nitrocellulose plant. The description of the molecular sieve control technique is included in Section 6.1.3.5.

#### 6.2.4.4 Costs

Costs for controlling $NO_x$ from explosives manufacture by tail gas treatment process were covered in Section 6.1.4.

### 6.2.5 Fertilizer Manufacture

Sulfuric and phosphoric acids are the principal acids used, in the United States, in acidulating phosphate rock. A few manufacturers produce "nitric phosphate" fertilizers by acidulating phosphate rock with nitric acid to form phosphoric acid and calcium nitrate. In subsequent steps, ammonia is added with either carbon dioxide or sulfuric or phosphoric acid, and "nitric phosphates" are formed. Dibasic calcium phosphate and ammonium nitrate are the useful compounds produced (Reference 6-48).

U.S. Department of Agriculture statistics do not segregate nitric phosphate fertilizers made by acidulation of phosphoric rock; but private sources indicate that nitric phosphate fertilizer

TABLE 6-9. EMISSION FACTORS FOR MANUFACTURE OF EXPLOSIVES (REFERENCE 6-45)

| Type of process | Nitrogen oxides[a] ($NO_2$) | |
|---|---|---|
| | kg/Mg | lb/ton |
| TNT — batch process[b] | | |
| Nitration reactors | | |
| Fume recovery | 12.5(3-19) | 25(6-38) |
| Acid recovery | 27.5(0.5-68) | 55(1-136) |
| Nitric acid concentrators | 18.5(8-36) | 37(16-72) |
| Red water incinerator | | |
| Uncontrolled[c] | 13(0.75-50) | 26(1.5-101) |
| Wet scrubber[d] | 2.5 | 5 |
| Sellite exhaust | — | — |
| TNT — continuous process[e] | | |
| Nitration reactors | | |
| Fume recovery | 4(3.35-5) | 8(6.7-10) |
| Acid recovery | 1.5(0.5-2.25) | 3(1-4.5) |
| Red water incinerator | 3.5(3-4.2) | 7(6.1-8.4) |
| Nitrocellulose[e] | | |
| Nitration reactors[f] | 7(1.85-17) | 14(3.7-34) |
| Nitric acid concentrator | 7(5-9) | 14(10-18) |

[a]For some processes considerable variations in emissions have been reported. The average of the values reported is shown first, with the ranges given in parentheses. Where only one number is given, only one source test was available.

[b]Reference 6-46

[c]Use low end of range for modern, efficient units and high end of range for older, less efficient units.

[d]Apparent reductions in $NO_x$ and particulate after control may not be significant because these values are based on only one test result.

[e]Reference 6-47

[f]For product with low nitrogen content (12 percent), use high end of range. For products with higher nitrogen content, use lower end of range.

made in this manner was estimated at 450 Gg (500,000 tons) in 1967, and nitric acid consumptions at 135 Gg (150,000 tons) (Reference 6-49).

$NO_x$ emissions are dependent on the quantity of carbonaceous material in the rock, since $NO_x$ is formed as nitric acid oxidizes the carbonaceous matter. The use of calcined rock avoids the production of $NO_x$.

Air pollution abatement by fertilizer manufacturers' efforts has centered on reducing particulates and fluorides emissions, which are severe problems. The water scrubbing used to reduce these pollutants would be expected to reduce $NO_x$ emissions to only a minor degree. Although no measurements of $NO_x$ emissions are available, brown plumes are said to occur.

One company has found that the addition of urea to the acidulation mixture reduces $NO_x$ emissions and eliminates the brown plume (Reference 6-49). Urea, as discussed in Section 6.1.3.3 reacts with nitric and nitrous acids to form $N_2$.

### 6.2.6 Metals Pickling

The principal use of nitric acid in metals pickling is in treating stainless steel. Mill scales on stainless steels are hard and are difficult to remove. Pickling procedures vary; sometimes a 10 percent sulfuric acid bath at 333K (140F) to 344K (160F) is followed by a bath at 328K (130F) to 339K (150F) with 10 percent nitric acid and 4 percent hydrofluoric acid. The first bath loosens the scale, and the second removes it. A continuous system for stainless steel strip consists of two tanks containing 15 percent hydrochloric acid, followed by a tank containing 4 percent hydrofluoric and 10 percent nitric acid at 339K (150F) to 350K (170F). One effective method is the use of molten salts of sodium hydroxide to which is added some agent such as sodium hydride. This may be followed by a dilute nitric acid wash (Reference 6-50).

No measurements were found of emission rates from nitric acid pickling of stainless steel. Treating equipment should be properly hooded and ventilated and the fumes scrubbed to protect workers. Urea would probably control the $NO_x$ emissions.

Nitric acid is also used in the chemical milling of copper or iron from metals that are not chemically attacked by nitric acid, and for bright-dipping copper. In the latter operation, a cold solution of nitric and sulfuric acid has been customarily used. It has been reported that copper can be bright-dipped on cold nitric acid alone when urea is added. A highly acceptable finish is obtained, and $NO_x$ fumes are eliminated.

Sulfuric acid should not be used with the nitric acid-urea mixture since nitrourea, an explosive, can form. Not more than 62 ml of urea per liter should be added, and satisfactory operation can be obtained with only 15 ml per liter.

In chemical milling, the addition of 46 to 62 ml of urea per liter of 40 percent nitric acid will reduce $NO_2$ emissions from 8,000 ppm to levels below 10 ppm, provided a bubble disperser is used (Reference 6-51).

A small, but intense, source of $NO_x$ occurs in the manufacture of tungsten filaments for lightbulbs. Tungsten filaments are wound on molybdenum cores, and after heat-treating, the cores are dissolved in nitric acid.

Reference 6-43 describes air pollution equipment for reducing the dense $NO_2$ fumes given off periodically when trays of the filaments are dissolved. The fumes pass over a charcoal adsorber bed, which adsorbs $NO_x$ as fumes are generated and desorbs when no fumes are being generated. This smooths out peaks and valleys in $NO_x$ content in off-gases, which are then heated and combined with carbon monoxide and hydrogen from a rich combustion flame. The mixture is then passed through a bed of noble metal catalyst. A colorless gas is released from the equipment.

## REFERENCES FOR SECTION 6


6-1 Manney, E.H. and S. Skopp, "Potential Control of Nitrogen Oxide Emissions from Stationary Sources," Presented at 62nd Annual Meeting of the Air Pollution Control Association, New York. June 22-26, 1969.

6-2 Freithe, W. and M. W. Packbier, "Nitric Acid: Recent Developments in the Energy and Environmental Area," presented at AICHE Symposium, Denver, Colorado, August 28, 1977.

6-3 Lowenheim, F.A. and M.K. Morgan, ed., Faith, Keyes, and Clark's Industrial Chemicals, 4th edition. New York, Wiley Interscience Publication, 1975.

6-4 "Strong Nitric Acid Process Features Low Utility Cost," Chemical Engineering, December 8, 1975, p. 98-99.

6-5 Personal communication. Mr. Dave Kirkbe, Davy Powergas, Houston, Texas, November 1977.

6-6 "Environmental Considerations of Selected Energy Conserving Manufacturing Process Options, Volume XV, Fertilizer Industry Report," EPA-600/7-76-0340, December 1976.

6-7 "Compilation of Air Pollution Emission Factors (Second Edition)," Publication No. AP-42, Environmental Protection Agency, Research Triangle Park, North Carolina, April 1973.

6-8 Gerstle, R.W. and R.F. Peterson, "Atmospheric Emissions from Nitric Acid Manufacturing Processes," National Center for Air Pollution Control, Cincinnati, Ohio, PHS Publication Number 999-AP-27, 1966.

6-9 Mayland, B.J., "Application of the CDL/VITOK Nitrogen Oxide Abatement Process," Presented to Sulfur and Nitrogen Symposium, Salford, Lancashire, U.K. April 1976.

6-10 Barber, J.C. and N.L. Faucett, "Control of Nitrogen Oxide Emissions from Nitric Acid Plants," Third Annual Air Pollution Control Conference, March 1973.

6-11 "$NO_x$ Abatement in Nitric Acid and Nitric Phosphate Plants," Nitrogen, No. 93, Jan/Feb 1975.

6-12 "MASAR Process for Recovery of Nitrogen Oxides," Company brochure, MASAR, Inc.

6-13 Personal communication, Mr. Feaser, Plant manager, Illinois Nitrogen Plant, Marseilles, Ill. November 1977.

6-14 Service, W.J., R.T. Schneider, and D. Ethington, "The Goodpasture Process for Chemical Abatement and Recovery of $NO_x$," Conference on Gaseous Sulfur and Nitrogen Compound Emissions, Salford, England, April 1976.

6-15 Streight, H.R.L., "Reduction of Oxides of Nitrogen in Vent Gases," Chem. Eng., Vol. 36, 1958.

6-16 Gillespie, G.R., A.A. Boyum, and M.F. Collins, "Nitric Acid: Catalytic Purification of Tail Gas," Chemical Engineering Progress, Vol. 68, 1972.

6-17 Decker, L, "Incineration Technique for Controlling Nitrogen Oxides Emissions," Presented at the 60th Annual Meeting of the Air Pollution Control Association, Cleveland, Ohio, June 1967.

6-18 Andersen, H.C., W.J. Green, and D.R. Steele, "Catalytic Treatment of Nitric Acid Tail Gas," Ind. Eng. Chem., 53:199-204, March 1961.

6-19 Anderson, G.C. and W.J. Green, "Method of Purifying Gases Containing Oxygen and Oxides of Nitrogen (Englehard Industries, Inc., U.S. Patent No. 2, 970, 034), Official Gazette U.S. Patent Office, 762(5):969, January 31, 1961.

6-20 Newman, D.J. and L.A. Klein, "Apparatus for Exothermic Catalytic Reactions," (Chemical Construction Corp., U.S. Patent No. 3, 443, 910), Official Gazette U.S. Patent Office, 862 (2):514, May 1969.

6-21 Andersen, H.C., P.L. Romeo, and W.J. Green, "New Family of Catalysts for Nitric Acid Tail Gases," Nitrogen 50:33-36, November-December 1967.

6-22 Rosenberg, H.S., "Molecular Sieve $NO_x$ Control Process in Nitric Acid Plants," Environmental Protection Technology Series, EPA-600/2-76-015, January 1976.

6-23 Chehaske, J.I. and J.S. Greenberg, "Molecular Sieve Tests for Control of $NO_x$ Emissions from a Nitric Acid Plant," Volume 1, EPA-600/2-76-048a, March 1971.

6-24 Rosenburg, H.S., "Molecular Sieve $NO_x$ Control Process in Nitric Acid Plants," EPA-600/2-76-015, January 1976.

6-25 Mayland, B.J. , The CDL/VITOK Nitrogen Oxides Abatement Process," Chenoweth Development Laboratory, Louisville, Ky.

6-26 Personal communication, Mr. Don Ethington, Goodpasture, Inc., Brownfield, Texas, November 1977, and February, 1978, and D. F. Carey, EPA-IERL, February 1978.

6-27 "New Unit for Nitric Plants Knocks Out $NO_x$," Chemical Week, July 28, 1976.

6-28 "Ammonium Nitrate," Hydrocarbon Process. 46:149, November 1967.

6-29 Miles, F.D., Nitric Acid — Manufacture and Uses, London, Oxford University Press, 1961.

6-30 Private communication with Esso Research and Engineering Co.

6-31 Durocher, D.F., P.D. Spawn, and R.C. Galkiewicz, "Screening Study to Determine Need for Standards of Performance for New Adipic Acid Plants," draft report GCA-TR-76-16-G GCA Corporation, Bedford, Massachusetts, June 1976.

6-32 Goldbeck, M., Jr., and F.C. Johnson, "Process for Separating Adipic Acid Precursors," (E.I. DuPont de Nemours and Co., U.S. Patent No. 2, 703, 331). Official Gazette U.S. Patent Office. 692(1):110, March 1, 1955.

6-33 Burrows, L.A., R.M. Cavanaugh, and W.M. Nagle, "Oxidation Process for Preparations of Terephthalic Acid," (E.I. DuPont de Nemours and Co., U.S. Patent No. 2, 636, 99). Official Gazette U.S. Patent Office. 669(4):1209, April 28, 1953.

6-34 Durocher, D.F. et al., "Screening Study to Determine Needs for Standards of Performance for New Sources of Dimethyl Terephthalate and Terephthalic Acid Manufacturing" Draft Final Report, GCA-TR-76-17-G. Submitted to EPA/OAQPS by GCA Corp., Bedford, Massachusetts, June 1976.

6-35 Lindsay, A.F., "Nitric Acid Oxidation Design in the Manufacture of Adipic Acid from Cyclohexanol and Cyclohexanone," Special Suppl. to Chem. Eng. Sci. 3:78-93, 1954.

6-36 Compilation of Air Pollutant Emission Factors, Environmental Protection Agency, AP-42, February 1972.

6-37 "Process for Oxidation of Cyclohexane and for the Production of Adipic Acid (British Patent No. 956, 779) and Production of Adipic Acid," (British Patent No. 956, 780). Great Britain Office. J. No. 3918:814, March 19, 1964.

6-38 Oil, Paint, and Drug Reptr. 195(6):1-48, April 21, 1969.

6-39 Crater, W. deC. Nitration. In: Kirk-Othmer Encyclopedia of Chemical Technology, Standen, A. (ed.). Vol. 9. New York, Interscience Publishers, 1952.

6-40 Private communication with E.I. DuPont de Nemours and Co., March 1969.

6-41 Urbanski, T., "Chemistry and Technology of Explosives," Jeczalikowa, I. and S. Laverton, (Trs.). Vol. I. New York, MacMillan Co., 1964.

6-42 Processes Research, Inc., "Air Pollution from Nitration Processes," Cincinnati, Ohio. APTD-1071, 1972.

6-43 Decker, L., "Incineration Technique for Controlling Nitrogen Oxides Emissions," Presented at the 60th Annual Meeting of the Air Pollution Control Association, Cleveland. June 11-16, 1967.

6-44 Nelson, T.P., and Pyle, R.E., "Screening Study to Determine the Need for New Source Performance Standards in the Explosives Manufacturing Industry," Draft Report, Radian Corporation, Austin, Texas, July 1976.

6-45 EPA, Compilation of Air Pollutant Emission Factors, AP-42, Supplement No. 5, December 1975.

6-46 Air Pollution Engineering Source Sampling Surveys, Radford Army Ammunition Plant. U.S. Army Environment Hygiene Agency, Edgewood Arsenal, Md.

6-47 Air Pollution Engineering Source Sampling Surveys, Volunteer Army Ammunition Plant and Joliet Army Ammunition Plant. U.S. Army Environmental Hygiene Agency, Edgewood Arsenal, Md.

6-48 McVickar, M.H. et al., "Fertilizer Technology and Usage," Madison, Wisconsin, Soil Science Society of America, 1963.

6-49 Consumption of Commercial Fertilizers, U.S. Dept. of Agriculture. Statistical Reporting Service.

6-50 McGannon, H.E., The Making, Shaping and Treating of Steel, 8th ed. Pittsburgh, United States Steel Co., 1964.

6-51 Kerns, B.A., "Chemical Suppression of Nitrogen Oxides," Ind. Eng. Chem. Process Design Develop. Vol. 4, pp. 263-265, 1965.

# APPENDIX A

## SELECTED TABLES IN ENGLISH UNITS

This appendix contains the English engineering unit version of three large cost tables presented in Section 6. The tables are arranged sequentially in the order in which they appear in the section and have the same table number as their counterparts except for the prefix "A".

TABLE A6-4. CAPITAL AND OPERATING COSTS FOR DIFFERENT $NO_x$ ABATEMENT SYSTEMS IN A 300 TPD NITRIC ACID PLANT (Reference 6-6 and 6-26)

| | Catalyst Reduction | Molecular Sieve | Grande Paroisse | CDL/ Vitok | Masar | Goodpasture |
|---|---|---|---|---|---|---|
| Capital Investment,[a] ($) | 1,384,000 | 1,200,000 | 1,000,000 | 575,000 | 663,000 | 425,000 |
| Royalty | -- | -- | included | none | fee | 51,000 |
| Operating Labor, (hr/yr) | 360 | 360 | 360 | 360 | 360 | 360 |
| ($/yr) | 2,200 | 2,200 | 2,200 | 2,200 | 2,200 | 2,200 |
| Maintenance Labor, | 315 | 315 | 315 | 315 | 540 | 315 |
| ($/yr) | 2,200 | 2,200 | 2,200 | 2,200 | 3,775 | 2,200 |
| Labor Overhead (incl. fringe benefits & supervision, $/yr) | 4,400 | 4,400 | 4,400 | 4,400 | 5,975 | 4,400 |
| Catalyst or Molecular Sieve | 77,800 | 45,600 | -- | -- | -- | -- |
| Cooling Water, (gpm) | -- | 500 | 300 | 1,020 | -- | 30 |
| ($/yr) | -- | 7,330 | 4,420 | 14,980 | -- | 440 |
| Steam, (lb/yr) | (15,833)[c] | 250 | -- | 715 | 1,310 | -- |
| ($/yr credit) | (387,590) | 6,120 | -- | 17,500 | 32,070 | -- |
| Electricity, (kW) | 128 | 322 | 90 | 265 | 20 | 45 |
| ($/yr) | 20,890 | 52,550 | 14,690 | 43,250 | 3,260 | 7340 |
| Boiler Feed Water, (gpm) | 35 | -- | -- | -- | -- | -- |
| ($/yr) | 12,850 | -- | -- | -- | -- | -- |
| Fuel, ($10^6$ Btu/hr) | 28.5 | 2.0 | -- | -- | -- | -- |
| ($/yr) | 465,120 | 32,640 | -- | -- | -- | -- |
| Nitric Acid, (tpd) | -- | (6.6) | (6.0) | (6.0) | (5.28) | -- |
| ($/yr) | -- | (112,200) | (102,000) | (102,000) | (89,760) | -- |
| Urea, tpd | | | | | 1.37[b] | -- |
| ($/yr) | | | | | 74,528 | -- |
| Ammonium Nitrate, (tpd) | | | | | 1.25 | (13.0) |
| ($/yr) | | | | | (42,500) | (422,000) |
| Depreciation (11-yr life) | 125,900 | 109,090 | 90,910 | 52,300 | 60,300 | 38,640 |
| Return on Investment (@ 20%) | 276,800 | 240,000 | 200,000 | 115,000 | 132,600 | 85,000 |
| Taxes & Insurance, (@ 2%) | 27,700 | 24,000 | 20,000 | 11,500 | 13,260 | 8,500 |
| Total Annual Cost, ($/yr) | 628,270 | 413,930 | 236,780 | 161,330 | 195,708 | (42,290) |
| Annual Cost, ($/ton) | 6.16 | 4.06 | 2.32 | 1.58 | 1.92 | (0.42) |

[a]Investment estimates exclude interest during construction, owners expenses, and land costs.

[b]Includes credit for 0.0017 tons of urea/ton or nitric acid produced present in the spent solution (0.5ITPD).

[c]Parenthesis indicate credit taken.

TABLE A6-5. ANNUAL ENERGY REQUIREMENTS ($10^9$ Btu) FOR $NO_x$ ABATEMENT SYSTEMS FOR A 300 TPD NITRIC ACID PLANT (Reference 6-6 and 6-26)

| | Basic Nitric Acid Plant | Catalytic Reduction | Molecular Sieve | Grande Paroisse | CDL/ Vitok | Masar | Goodpasture |
|---|---|---|---|---|---|---|---|
| Steam (Credit) | (71.4) | (129.20) | 2.04 | - | 5.83 | 10.69 | - |
| Electrical | - | 10.97 | 27.59 | 7.71 | 22.71 | 1.71 | 1.38 |
| Natural Gas | 163.2 | 232.56 | - | - | - | - | - |
| Oil | - | - | 16.32 | - | - | - | - |
| | 91.8 | 114.33 | 45.95 | 7.71 | 28.54 | 12.40 | 1.38 |

TABLE A6-6. BASIS FOR TABLES A6-4 AND A6-5 (Reference 6-6)

(Plant Capacity @ 300 tpd and 102,000 tons/yr)

(March 1975 Dollars, ENR Index = 2.126)

| | | |
|---|---|---|
| 1. | Operating Labor | @ $6.1/hr |
| 2. | Maintenance Labor | @ $7.0/hr |
| 3. | Overhead | @ 100% of labor (including fringe benefits and supervision) |
| 4. | Cooling Water | @ $0.03 1,000 gal |
| 5. | Boiler Feedwater | @ $0.75 1,000 gal |
| 6. | Natural Gas | @ $2.00/$10^6$ Btu |
| 7. | Oil | @ $2.00/$10^6$ Btu |
| 8. | Depreciation | @ 11 yr straight line |
| 9. | Return on Investment | @ 20% of capital cost |
| 10. | Taxes and Insurance | @ 2% of capital cost |
| 11. | Nitric Acid | @ $90/ton |
| 12. | Urea | @ $160/ton |
| 13. | Ammonium Nitrate | @ $100/ton |
| 14. | 1 kWh = 10,500 Btu | |
| 15. | Electricity | @ $0.02/kWh |
| 16. | Ammonia | @ $157/ton |

*U.S. GOVERNMENT PRINTING OFFICE: 1983--639-001/3002

## APPENDIX B

## PREFIXES FOR SI UNITS

The names of multiples and submultiples of SI units may be formed by application of these prefixes:

| Factor by Which Unit is Multiplied | Prefix | Symbol |
|---|---|---|
| $10^{18}$ | exa | E |
| $10^{15}$ | peta | P |
| $10^{12}$ | tera | T |
| $10^{9}$ | giga | G |
| $10^{6}$ | mega | M |
| $10^{3}$ | kilo | k |
| $10^{2}$ | hecto | h |
| 10 | deka | da |
| $10^{-1}$ | deci | d |
| $10^{-2}$ | centi | c |
| $10^{-3}$ | milli | m |
| $10^{-6}$ | micro | μ |
| $10^{-9}$ | nano | n |
| $10^{-12}$ | pico | p |
| $10^{-15}$ | femto | f |
| $10^{-18}$ | atto | a |

## APPENDIX C

## GLOSSARY

Biased Firing — An off-stoichiometric combustion technique in which the burners of a wall-fired utility boiler are operated either fuel- or air-rich in a staggered configuration.

Boiler Efficiency — $\frac{\text{Heat Output}}{\text{Heat Input}} \times 100.$

The overall figure reflects combustion efficiency, radiation and convection losses from the boiler, and heat lost in exhaust gases.

Burners Out Of Service (BOOS) — An off-stoichiometric combustion technique in which some burners are operated on air only.

Combustion Modification — An alteration of the normal burner/firebox configuration or operation employed for the purpose of reducing the formation of nitrogen oxides.

Derating — Reducing the heat input and power or steam output of a boiler below the level for which it was designed.

Excess Air — Any increment of air greater than the stoichiometric fuel requirement. With gas-, oil-, and coal-fired boilers, some excess air is used to assure optimum combustion.

Field-Erected Boiler — All components of a boiler are delivered to the site and assembled in the field. Mainly pertains to utility and large industrial boilers.

Firetube Boiler — Steam or hot water generator with heat transfer surface consisting of steel tubes surrounded by water and carrying hot combustion gases.

Flue Gas Recirculation (FGR) — A combustion modification in which a portion of the boiler exhaust gases are recirculated to the burners to inhibit NO formation.

Flue Gas Treatment — A process which treats tail gases chemically to remove $NO_x$ before release to the atmosphere.

Fuel Nitrogen — Nitrogen that is chemically bound in the fuel.

Heat Input — The product of the fuel feedrate and the higher heating value, e.g., 10 Mg per hour of coal with a higher heating value of 29 MJ/kg provides a heat input of 80.5 MW (290GJ/h).

Heat Release Rate — The rate of combustion per unit volume of firebox, typically in terms of $MW/m^3$.

Higher or Gross Heating Value (HHV) — The heat generated by complete combustion of a fuel, always referenced to baseline temperature, e.g., 16°C. Heat available at the reference temperature is included in the higher heating value even if it is not practically available, i.e., heat of condensing water vapor.

Low Excess Air — A combustion modification in which $NO_x$ formation is inhibited by reducing the excess air to less than normal ratios.

Lower or Net Heating Value (LHV) — The heat that is practically available from a fuel to generate steam or otherwise raise the temperature of the media receiving energy. The net heating value assumes complete combustion. It differs from the higher heating value in that heat of vaporizing water of combustion is considered a recoverable loss.

Off-Stoichiometric Combustion (OSC) — A combustion modification technique in which burner stoichiometry is altered to inhibit $NO_x$ formation. Types of OSC include biased firing, burners out of service, and two-stage combustion.

Packaged Boilers — These are usually boilers that are smaller and more economically assembled at the plant, then shipped to the boiler site as one integral unit ready for operation after connection to water, stream, and power.

Polycyclic Organic Matter (POM) — Organic compounds which exists in condensed phase at ambient temperature and are emitted as either "carbon on particulate" or condensed onto emitted particulate.

Polynuclear Aromatic Hydrocarbons (PNA) — Same as POM.

Stoichiometric Air — That quantity of air which supplies only enough oxygen to react with the combustible portion of the fuel.

Two-Stage Combustion — A type of off-stoichiometric combustion in which the burners are operated fuel-rich and the remainder of the required combustion air is introduced through separate ducts located above the burner. This is also called "overfire air" or "$NO_x$ port operation.

Watertube Boiler — A steam generator with heat transfer surface consisting of steel tubes carrying water that are exposed to hot combustion gases.

## TECHNICAL REPORT DATA
*(Please read Instructions on the reverse before completing)*

| | | |
|---|---|---|
| 1. REPORT NO. EPA-450/3-83-002 | 2. | 3. RECIPIENT'S ACCESSION NO. |
| 4. TITLE AND SUBTITLE Control Techniques for Nitrogen Oxides Emissions from Stationary Sources - Revised Second Edition | | 5. REPORT DATE January 1983 |
| | | 6. PERFORMING ORGANIZATION CODE |
| 7. AUTHOR(S) | | 8. PERFORMING ORGANIZATION REPORT NO. |
| 9. PERFORMING ORGANIZATION NAME AND ADDRESS | | 10. PROGRAM ELEMENT NO. |
| | | 11. CONTRACT/GRANT NO. 68-02-3513 Work Assignment 24 |
| 12. SPONSORING AGENCY NAME AND ADDRESS United States Environmental Protection Agency Office of Air Quality Planning and Standards Research Triangle Park, North Carolina 27711 | | 13. TYPE OF REPORT AND PERIOD COVERED Final |
| | | 14. SPONSORING AGENCY CODE EPA 200/04 |

15. SUPPLEMENTARY NOTES

This document is issued in accordance with the requirements of Section 108 of the Clean Air Act, as amended, 1977.

16. ABSTRACT


As required by Section 108 of the Clean Air Act, this revised second edition compiles the best available information on $NO_x$ emissions; achievable control levels and alternative methods of prevention and control of $NO_x$ emissions; alternative fuels, processes, and operating methods which reduce $NO_x$ emissions; cost of $NO_x$ control methods, installation, and operation; and the energy requirements and environmental impacts of the $NO_x$ emission control technology.

Each stationary source of $NO_x$ emissions is discussed along with the various control techniques and process modifications available to reduce $NO_x$ emissions. Various combinations of equipment process conditions and fuel types are identified and evaluated for $NO_x$ emission control.

This revised second edition of Control Techniques for Nitrogen Oxides Emissions from Stationary Sources updates the second edition (EPA-450/1-78-001) published in January 1978. The changes are limited to revisions of information on emissions and emission factors (Chapter 2), combustion modifications (Section 3.1), combustion flue gas treatment (Section 3.2), utility boilers (Section 4.1), industrial boilers (Section 4.2), space heating (Section 5.1), and industrial process heating (Section 5.3)


17. KEY WORDS AND DOCUMENT ANALYSIS

| a. DESCRIPTORS | b. IDENTIFIERS/OPEN ENDED TERMS | c. COSATI Field/Group |
|---|---|---|
| Nitrogen Oxides Emissions<br>Control Techniques<br>Fossil Fuel Combustion<br>Nitric Acid Manufacturing<br>Costs<br>Photochemical Oxidants | | 13b |

| | | |
|---|---|---|
| 18. DISTRIBUTION STATEMENT Release Unlimited | 19. SECURITY CLASS *(This Report)* Unclassified | 21. NO. OF PAGES 428 |
| | 20. SECURITY CLASS *(This page)* Unclassified | 22. PRICE |

EPA Form 2220-1 (Rev. 4-77) PREVIOUS EDITION IS OBSOLETE