EPA-450/3-83-005a

# Distillation Operations In Synthetic Organic Chemical Manufacturing-

# Background Information For Proposed Standards

Emission Standards and Engineering Division

U.S. ENVIRONMENTAL PROTECTION AGENCY
Office of Air, Noise, and Radiation
Office of Air Quality Planning and Standards
Research Triangle Park, North Carolina 27711

December 1983

This report has been reviewed by the Emission Standards and Engineering Division of the Office of Air Quality Planning and Standards, EPA, and approved for publication. Mention of trade names or commercial products is not intended to constitute endorsement or recommendation for use. Copies of this report are available through the Library Services Office (MD-35), U.S. Environmental Protection Agency, Research Triangle Park, N.C. 27711, or from the National Technical Information Services, 5285 Port Royal Road, Springfield, Virginia 22161.

ENVIRONMENTAL PROTECTION AGENCY

Background Information and Draft
Environmental Impact Statement
for Distillation Operations in Synthetic
Organic Chemical Manufacturing

Prepared by:

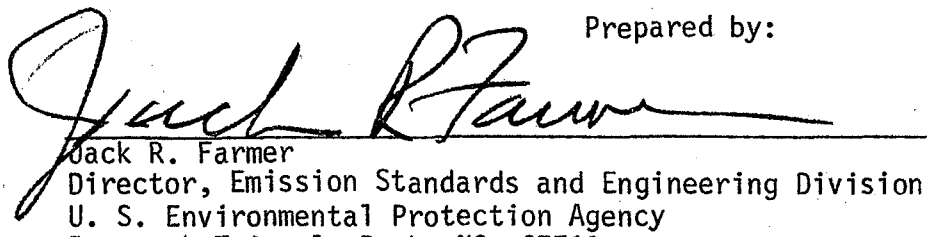

1/5/84
(Date)

Jack R. Farmer
Director, Emission Standards and Engineering Division
U. S. Environmental Protection Agency
Research Triangle Park, NC 27711

1. The proposed standards of performance would limit emissions of volatile organic compounds from new, modified, and reconstructed distillation operations. Section 111 of the Clean Air Act (42 U.S.C. 7411), as amended, directs the Administrator to establish standards of performance for any category of new stationary source of air pollution that ". . . causes or contributes significantly to air pollution which may reasonably be anticipated to endanger public health or welfare." Many such operations are located in the States of Texas and Louisiana.

2. Copies of this document have been sent to the following Federal Departments: Labor, Health and Human Services, Defense, Office of Management and Budget, Transportation, Agriculture, Commerce, Interior, and Energy; the National Science Foundation; the Council on Environmental Quality; members of the State and Territorial Air Pollution Program Administrators; the Association of Local Air Pollution Control Officials; EPA Regional Administrators; and other interested parties.

3. The comment period for review of this document is 60 days from the date of proposal of the Standards. Mr. Gilbert H. Wood may be contacted at (919) 541-5578 regarding the date of the comment period.

4. For additional information contact:
Mr. Robert E. Rosensteel
Chemicals and Petroleum Branch (MD-13)
U. S. Environmental Protection Agency
Research Triangle Park, N. C. 27711
Telephone: (919) 541-5671.

5. Copies of this document may be obtained from:
U. S. EPA Library (MD-35)
Research Triangle Park

National Technical Information Service
5285 Port Royal Road
Springfield, VA 22161

On February 17, 1984 the Agency issued an erratta for this document replacing Chapter 5. The eratta can be found under the publication number designation EPA-450/3-83-005AES

TABLE OF CONTENTS


| Chapter | | Page |
|---|---|---|
| LIST OF TABLES | | viii |
| LIST OF FIGURES | | xii |
| 1.0 | SUMMARY | 1-1 |
| | 1.1 Regulatory Alternatives for Distillation Operations | 1-1 |
| | 1.2 Environmental Impact | 1-2 |
| | 1.3 Economic Impact | 1-4 |
| 2.0 | INTRODUCTION | 2-1 |
| | 2.1 Background and Authority for Standards | 2-1 |
| | 2.2 Selection of Categories of Stationary Sources | 2-5 |
| | 2.3 Procedure for Development of Standards of Performance | 2-7 |
| | 2.4 Consideration of Costs | 2-9 |
| | 2.5 Consideration of Environmental Impacts | 2-10 |
| | 2.6 Impact on Existing Sources | 2-11 |
| | 2.7 Revision of Standards of Performance | 2-12 |
| 3.0 | VOC EMISSIONS FROM DISTILLATION OPERATIONS AT ORGANIC CHEMICAL MANUFACTURING PLANTS | 3-1 |
| | 3.1 General Industry Information | 3-2 |
| | 3.2 Distillation | 3-8 |
| | 3.2.1 Types of Distillation | 3-8 |
| | 3.2.2 Fundamental Distillation Concepts | 3-11 |
| | 3.3 VOC Emission Points From Distillation Units | 3-17 |
| | 3.3.1 National Emissions Profile (NEP) | 3-18 |
| | 3.3.2 Geographical Bias in the Screened NEP | 3-23 |
| | 3.4 Baseline Control Level for Distillation Operations | 3-26 |
| | 3.5 References for Chapter 3 | 3-30 |
| 4.0 | EMISSION CONTROL TECHNIQUES | 4-1 |
| | 4.1 Noncombustion Control Devices | 4-1 |
| | 4.1.1 Adsorption | 4-2 |
| | 4.1.1.1 Adsorption Process Description | 4-2 |
| | 4.1.1.2 Adsorption Control Efficiency | 4-3 |
| | 4.1.1.3 Applicability of Adsorption | 4-5 |

TABLE OF CONTENTS (CONTINUED)


| Chapter | | | Page |
|---|---|---|---|
| | | 4.1.2 Absorption | 4-5 |
| | | 4.1.2.1 Absorption Process Description | 4-5 |
| | | 4.1.2.2 Absorption Control Efficiency | 4-7 |
| | | 4.1.2.3 Applicability of Absorption | 4-7 |
| | | 4.1.3 Condensation | 4-9 |
| | | 4.1.3.1 Condensation Process Description | 4-9 |
| | | 4.1.3.2 Condenser Control Efficiency | 4-9 |
| | | 4.1.3.3 Applicability of Condensers | 4-11 |
| | 4.2 | Combustion Control Devices | 4-11 |
| | | 4.2.1 Flares | 4-12 |
| | | 4.2.1.1 Flare Process Description | 4-12 |
| | | 4.2.1.2 Flare Combustion Efficiency | 4-15 |
| | | 4.2.1.3 Applicability of Flares | 4-19 |
| | | 4.2.2 Thermal Incineration | 4-20 |
| | | 4.2.2.1 Thermal Incineration Process Description | 4-20 |
| | | 4.2.2.2 Thermal Incineration Removal Efficiency | 4-23 |
| | | 4.2.2.3 Applicability of Thermal Incinerators | 4-24 |
| | | 4.2.3 Industrial Boiler and Process Heater Combustion Control Devices | 4-24 |
| | | 4.2.3.1 Industrial Boiler Process Description | 4-26 |
| | | 4.2.3.2 Process Heater Description | 4-26 |
| | | 4.2.3.3 Control Efficiency | 4-27 |
| | | 4.2.3.4 Applicability of Industrial Boilers and Process Heaters as Control Devices | 4-28 |
| | | 4.2.4 Catalytic Oxidation | 4-29 |
| | | 4.2.4.1 Catalytic Oxidation Process Description | 4-29 |
| | | 4.2.4.2 Catalytic Oxidizer Control Efficiency | 4-31 |
| | | 4.2.4.3 Applicability of Catalytic Oxidizers | 4-31 |
| | | 4.2.5 Advantages and Disadvantages of Control by Combustion | 4-29 |
| | 4.3 | Summary | 4-32 |
| | 4.4 | References for Chapter 4 | 4-34 |
| 5.0 | | MODIFICATION AND RECONSTRUCTION | 5-1 |
| | 5.1 | Modification | 5-1 |
| | 5.2 | Reconstruction | 5-3 |
| | 5.4 | References for Chapter 5 | 5-7 |

TABLE OF CONTENTS (CONTINUED)


| Chapter | | Page |
|---|---|---|
| 6.0 | REGULATORY ANALYSIS. . . . . | 6-1 |
| | 6.1 Overview of the Regulatory Analysis . . . . . | 6-1 |
| | 6.2 Selection of Control Options. . . . . | 6-3 |
| | 6.3 Summary of the Screened National Emission Profile (NEP) . . . . . | 6-5 |
| | 6.4 Results of Regulatory Analysis. . . . . | 6-7 |
| 7.0 | ENVIRONMENTAL AND ENERGY IMPACTS . . . . . | 7-1 |
| | 7.1 Air Pollution Impacts . . . . . | 7-3 |
| | 7.1.1 Effects of VOC Control . . . . . | 7-3 |
| | 7.1.2 Other Effects on Air Quality . . . . . | 7-6 |
| | 7.2 Water Pollution Impacts . . . . . | 7-7 |
| | 7.3 Solid Waste Disposal Impacts. . . . . | 7-8 |
| | 7.4 Energy Impacts. . . . . | 7-8 |
| | 7.4.1 Energy Requirements for Combustion Devices. . . . . | 7-8 |
| | 7.4.2 Other Energy Requirements. . . . . | 7-9 |
| | 7.5 Other Environmental Impacts . . . . . | 7-9 |
| | 7.5.1 Considerations for Installing Control Equipment. . . . . | 7-9 |
| | 7.6 Other Environmental Concerns. . . . . | 7-9 |
| | 7.6.1 Irreversible and Irretrievable Commitment of Resources . . . . . | 7-9 |
| | 7.6.2 Environmental Impact of Delayed Standards. . | 7-9 |
| | 7.7 References for Chapter 7. . . . . | 7-11 |
| 8.0 | COSTS. . . . . | 8-1 |
| | 8.1 Development of Control System Costs . . . . . | 8-1 |
| | 8.1.1 Control System Sizing. . . . . | 8-2 |
| | 8.1.1.1 Thermal Incinerator . . . . . | 8-2 |
| | 8.1.1.2 Industrial Boiler . . . . . | 8-3 |
| | 8.1.1.3 Flare . . . . . | 8-5 |
| | 8.1.1.4 Pipeline/Compressor System. . . . . | 8-8 |
| | 8.1.2 Capital Cost Bases . . . . . | 8-8 |
| | 8.1.2.1 Thermal Incinerator . . . . . | 8-10 |
| | 8.1.2.2 Industrial Boiler . . . . . | 8-11 |
| | 8.1.2.3 Flare . . . . . | 8-11 |
| | 8.1.2.4 Pipeline System . . . . . | 8-11 |
| | 8.1.3 Annualized Cost Bases. . . . . | 8-12 |
| | 8.1.4 Comparison of Control System Costs . . . . . | 8-12 |

TABLE OF CONTENTS (CONTINUED)


| Chapter | | | Page |
|---|---|---|---|
| | 8.2 | National Cost Impacts | 8-19 |
| | | 8.2.1 Determination of Cost Impacts | 8-19 |
| | | 8.2.2 Results of Cost Analysis | 8-20 |
| | | 8.2.3 Major Differences Between Cost Methodologies Used in the Regulatory and Economic Analyses | 8-22 |
| | 8.3 | Other Cost Considerations | 8-23 |
| | | 8.3.1 Control Cost Accumulation for Synthetic Organic Chemical Manufacturing Industries with Distillation Operations | 8-23 |
| | | 8.3.1.1 Introduction | 8-23 |
| | | 8.3.1.2 Data and Assumptions for Accumulating Costs | 8-26 |
| | | 8.3.1.3 Rolled-Through Costs | 8-39 |
| | 8.4 | References for Chapter 8 | 8-41 |
| 9.0 | | ECONOMIC IMPACT ANALYSIS | 9-1 |
| | 9.1 | Industry Structure | 9-2 |
| | | 9.1.1 The Organic Chemicals Industry | 9-2 |
| | | 9.1.1.1 Industry Definition | 9-2 |
| | | 9.1.1.2 Products | 9-2 |
| | | 9.1.1.3 Producers | 9-3 |
| | | 9.1.1.4 Industry Employment | 9-3 |
| | | 9.1.1.5 Industry Finances | 9-5 |
| | | 9.1.1.6 Prices | 9-9 |
| | | 9.1.1.7 Foreign Trade | 9-15 |
| | | 9.1.1.8 Chemical Groups | 9-20 |
| | | 9.1.1.9 Petroleum Refineries | 9-43 |
| | | 9.1.2 Projections of New Plants | 9-43 |
| | 9.2 | Chemical Screening Analysis | 9-51 |
| | | 9.2.1 Screening Criterion | 9-53 |
| | | 9.2.2 Control Costs for the Screening | 9-53 |
| | | 9.2.2.1 Direct Costs | 9-54 |
| | | 9.2.2.2 Rolled-Through Costs of Control | 9-55 |
| | | 9.2.3 Plant Parameters | 9-57 |
| | | 9.2.4 Results of the Screening | 9-59 |
| | 9.3 | General Economic Impacts | 9-62 |
| | | 9.3.1 Price Impacts | 9-63 |
| | | 9.3.2 Production Impacts | 9-63 |
| | | 9.3.3 Employment Impacts | 9-65 |
| | | 9.3.4 Trade Impacts | 9-65 |
| | | 9.3.5 Other Impacts | 9-66 |

TABLE OF CONTENTS (CONTINUED)


| Chapter | | Page |
|---|---|---|
| 9.4 | Aggregate Impacts - Socioeconomic and Inflationary | 9-66 |
| | 9.4.1 Fifth-Year Impacts | 9-66 |
| | 9.4.2 Regulatory Flexibility Act Considerations | 9-67 |
| | 9.4.3 Cumulative Price Impacts from Distillation NSPS and Other Air Standards | 9-67 |
| 9.5 | References for Chapter 9 | 9-71 |
| APPENDIX A: | EVOLUTION OF THE PROPOSED STANDARD | A-1 |
| APPENDIX B: | INDEX TO ENVIRONMENTAL CONSIDERATIONS | B-1 |
| APPENDIX C: | NATIONAL EMISSIONS PROFILE | C-1 |
| APPENDIX D: | EMISSION MEASUREMENT | D-1 |
| D.1 | Introduction | D-1 |
| | D.1.1 VOC Measurement | D-2 |
| | D.1.2 Emission Measurement Tests | D-2 |
| D.2 | Performance Test Methods | D-2 |
| APPENDIX E: | LIST OF CHEMICALS COVERED BY THE STANDARD | E-1 |
| APPENDIX F: | COSTING ALGORITHMS | F-1 |
| F.1 | Flare Algorithms | F-1 |
| F.2 | Industrial Boiler Algorithms | F-3 |
| F.3 | Thermal Incinerator Algorithms | F-9 |
| F.4 | Pipeline Algorithms | F-11 |
| F.5 | References for Appendix F | F-17 |
| APPENDIX G: | TRE DEVELOPMENT | G-1 |
| G.1 | Definition of TRE Index | G-1 |
| G.2 | Development of TRE Equation Coefficients | G-2 |
| G.3 | TRE Correlation Results | G-3 |
| | G.3.1 Flare Pipeline Correlation | G-3 |
| | G.3.2 Incinerator Pipeline Correlation | G-4 |
| | G.3.3 Flare Correlation | G-4 |
| | G.3.4 Incinerator Correlation | G-5 |
| | G.3.5 Total Annualized Cost Equations | G-5 |
| G.4 | Development of TRE and TRE Index Equations | G-6 |

TABLE OF CONTENTS (CONTINUED)


| Chapter | | Page |
|---|---|---|
| APPENDIX H: | UNITED STATES ORGANIC CHEMICAL PRODUCERS, PLANT LOCATIONS, AND CHEMICALS PRODUCED, 1978 . . . . . | H-1 |
| APPENDIX I: | SCREENING DATA AND RESULTS. . . . . | I-1 |
| I.1 | Screening Data and Assumptions . . . . . | I-14 |
| I.2 | Screening Results. . . . . | I-16 |
| I.3 | References for Appendix I . . . . . | I-29 |

LIST OF TABLES


| Table | | Page |
|---|---|---|
| 1-1 | Matrix of Environmental and Economic Impacts for the Extremes of Regulatory Alternatives Considered . . . . . | 1-3 |
| 3-1 | Percentage of Feedstock Chemicals from Various Sources . . | 3-3 |
| 3-2 | Estimated Production and Chemical Coverage for Various Production Levels. . . . . | 3-7 |
| 3-3 | Overview of the National Emission Profile. . . . . | 3-24 |
| 3-4 | Overview of the Screened National Emission Profile . . . . | 3-25 |
| 4-1 | Flare Emission Test Studies Complete . . . . . | 4-17 |
| 6-1 | Overview of the Screened National Emission Profile . . . . | 6-6 |
| 6-2 | Relationship Between Number of Units Expected to be Controlled and Percentage of Units Required to be Controlled for some 'TRE Cutoffs'. . . . . | 6-10 |
| 7-1 | VOC Emission Reduction and Energy Requirements for Flare Preference . . . . . | 7-4 |
| 7-2 | VOC Emission Reduction and Energy Requirements for Boiler Preference. . . . . | 7-5 |
| 8-1 | Incinerator General Design Specifications. . . . . | 8-4 |
| 8-2 | Industrial Boiler General Design Specifications. . . . . | 8-6 |
| 8-3 | Flare General Design Specifications. . . . . | 8-7 |
| 8-4 | Capital Cost Equations for New Flares and Incinerators . . | 8-9 |
| 8-5 | Bases for Annualized Control System Costs. . . . . | 8-13 |
| 8-6 | Cost Comparisons for Control of Individual Distillation Vent Streams Listed in the NEP . . . . . | 8-15 |
| 8-7 | Annualized Control Costs of Eight Air Standards for Twelve Chemical Groups Fifth Year After Proposal . . . . | 8-27 |
| 8-8 | Number of Benzene-Consuming Plants Projected to be Affected by Distillation NSPS, 1982-1987, United States. | 8-29 |

LIST OF TABLES (Continued)


| Table | | Page |
|---|---|---|
| 8-9 | Fifth Year Annualized Costs of the NSPS for Air Oxidation Processes, by Specific Industry: 26 Chemical Industries, United States, 1978. . . . . | 8-37 |
| 8-10 | Fifth-Year Annualized Cost of Distillation NSPS by Specific Chemical Groups, 14 Chemical Groups, United States, 1978 . . . . . | 8-38 |
| 8-11 | Total Fifth Year Annualized Cost of Control Accumulated for Eight Potential Air Regulations, 12 Chemical Groups, United States, 1978. . . . . | 8-40 |
| 9-1 | Chemical Sales as a Percentage of Total Sales at the 50 Largest U. S. Chemical Producers. . . . . | 9-4 |
| 9-2 | Combined Cash Flow at 15 Major U. S. Chemical Producers. . | 9-10 |
| 9-3 | Debt Ratios at Chemical Companies and All Manufacturing Companies. . . . . | 9-11 |
| 9-4 | U. S. Balance of Trade in Chemicals and All Products . . . | 9-16 |
| 9-5 | Selected Chemical Imports and Exports: Levels and Percentages of U. S. Production. . . . . | 9-17 |
| 9-6 | U. S. Plants, Producers, Capacity, Production, Capacity Utilization, and Price (Feedstocks) . . . . . | 9-23 |
| 9-7 | U. S. Plants, Producers, Capacity, Production, Capacity Utilization, and Price (Intermediates: General Aromatics) . . . . . | 9-26 |
| 9-8 | U. S. Plants, Producers, Capacity, Production, Capacity Utilization, and Price (Intermediates: General Nonaromatics). . . . . | 9-27 |
| 9-9 | U. S. Plants, Producers, Capacity, Production, Capacity Utilization, and Price (Intermediates: Synthetic Elastomers). . . . . | 9-30 |
| 9-10 | U. S. Plants, Producers, Capacity, Production, Capacity Utilization, and Price (Intermediates: Plastics and Fibers) . . . . . | 9-31 |

LIST OF TABLES (Continued)


| Table | | Page |
|---|---|---|
| 9-11 | U. S. Plants, Producers, Capacity, Production, Capacity Utilization, and Price (Intermediates: Plasticizers). . . . . | 9-35 |
| 9-12 | U. S. Plants, Producers, Capacity, Production, Capacity Utilization, and Price (Intermediates: Pesticides). . . . . | 9-36 |
| 9-13 | U. S. Plants, Producers, Capacity, Production, Capacity Utilization, and Price (Intermediates: Dyes). . . . . | 9-37 |
| 9-14 | U. S. Plants, Producers, Capacity, Production, Capacity Utilization, and Price (Solvents) . . . . . | 9-38 |
| 9-15 | U. S. Plants, Producers, Capacity, Production, Capacity Utilization, and Price (Detergents and Surfactants). . . | 9-40 |
| 9-16 | U. S. Plants, Producers, Capacity, Production, Capacity Utilization, and Price (Fuel Additives) . . . . | 9-41 |
| 9-17 | U. S. Plants, Producers, Capacity, Production, Capacity Utilization, and Price (Aerosol Propellants and Refrigerants). . . . . | 9-42 |
| 9-18 | U. S. Plants, Producers, Capacity, Production, Capacity Utilization, and Price (Coatings) . . . . . | 9-44 |
| 9-19 | U. S. Plants, Producers, Capacity, Production, Capacity Utilization, and Price (Miscellaneous End-Use Chemicals) . . . . . | 9-45 |
| 9-20 | Total and Average Crude Distillation Capacity by Year. . . | 9-46 |
| 9-21 | Product Yields of Refineries in the U. S.. . . . . | 9-47 |
| 9-22 | Equations for Projecting New Capacity and Plants for the Organic Chemicals Industry . . . . . | 9-48 |
| 9-23 | Projected Number of New and Replacement Distillation Plants in the Organic Chemicals Industry Between November 1982 and November 1987. . . . . | 9-52 |

LIST OF TABLES (Continued)


| Table | | Page |
|---|---|---|
| 9-24 | Distribution of Chemicals According to Size of Potential Price Increase | 9-60 |
| 9-25 | Average Throughput and Annual Plant Sales | 9-64 |
| 9-26 | Price Increases Due to Direct and Indirect Costs of Control in the Synthetic Organic Chemicals Industry for Eight Air Emission Standards | 9-69 |
| F-1 | Pipeline Components | F-15 |
| G-1 | Coefficients for TRE ($/Mg) Equation | G-7 |
| G-2 | Coefficients for TRE Index Equation | G-8 |
| I-1 | Organic Chemicals Industry List of Chemical Products Included in Computer Screening | I-2 |
| I-2 | Screening Data and Assumptions | I-18 |
| I-3 | Screening Results | I-24 |

LIST OF FIGURES


| Figure | | Page |
|---|---|---|
| 3-1 | The Interwoven Nature of Feedstocks for the Organic Chemicals Manufacturing Industry | 3-4 |
| 3-2 | Chain of Chemicals Made from Ethylene | 3-5 |
| 3-3 | Flash Distillation | 3-10 |
| 3-4 | A Conventional Fractionating Column | 3-12 |
| 3-5 | Potential VOC Emission Points for a Nonvacuum Distillation Column | 3-19 |
| 3-6 | Potential VOC Emission Points for a Vacuum Distillation Column Using Steam Jet Ejectors with a Barometric Condenser | 3-20 |
| 3-7 | Potential VOC Emission Points for a Vacuum Distillation Column Using Steam Jet Ejectors and Surface Condensers | 3-21 |
| 3-8 | Potential VOC Emission Points for a Vacuum Distillation Column Using a Vacuum Pump | 3-22 |
| 3-9 | Development of the Baseline Control Profile | 3-29 |
| 4-1 | Two Stage Regenerative Adsorption System | 4-4 |
| 4-2 | Packed Tower for Gas Adsorption | 4-8 |
| 4-3 | Condensation System | 4-10 |
| 4-4 | Steam Assisted Elevated Flare System | 4-13 |
| 4-5 | Discrete Burner, Thermal Oxidizer | 4-22 |
| 4-6 | Distributed Burner, Thermal Oxidizer | 4-22 |
| 4-7 | Catalytic Oxidizer | 4-30 |
| 5-1 | Vapor Recompression | 5-4 |
| 8-1 | Summary of Annualized Control System Costs for the Five Individual Vent Stream Cases Selected | 8-17 |

LIST OF FIGURES (Continued)


| Figure | | Page |
|---|---|---|
| 8-2 | National Annualized Cost of Combustion Control Using Flare and Incinerator Costs as a Function of the Associated National Percent Reduction in Uncontrolled VOC Emissions from Distillation Operations . . . . . | 8-21 |
| 9-1 | U. S. Chemicals Industry Annual Profit Margin, 1970 - 1980. . . . . | 9-6 |
| 9-2 | U. S. Chemicals Industry Annual Return on Stockholders' Equity . . . . . | 9-7 |
| 9-3 | Composite Index of Five Oil-Based Organic Chemicals and Index of Crude Oil Prices. . . . . | 9-14 |
| 9-4 | Processing Flow for 219 Organic Chemicals. . . . . | 9-21 |
| F-1 | Distribution of Industrial Boiler Types. . . . . | F-5 |
| F-2 | Header Schematic . . . . . | F-12 |

# 1. SUMMARY

New source performance standards (NSPS) are being developed for the synthetic organic chemical manufacturing industry under authority of Section 111 of the Clean Air Act, as amended in 1977. Emissions of volatile organic compounds (VOC) from various sources in this source category are being considered under several standards development programs. This background information document supports the development of NSPS for VOC emissions from distillation operations involved in the manufacture of synthetic organic chemicals. A list of affected chemicals considered in this document is presented in Appendix E.

## 1.1 REGULATORY ALTERNATIVES FOR DISTILLATION OPERATIONS

There are numerous control techniques applicable to the reduction of VOC emissions from distillation operations. Some of these techniques are used primarily for product recovery. These techniques include condensation, carbon adsorption, and gas absorption. However, since these techniques can only be used in very specific circumstances, they are not considered universally applicable to all distillation operations. One control technique, combustion, was deemed to be applicable to emissions from distillation operations in general. Combustion devices capable of achieving high destruction efficiency were selected as best demonstrated technology (BDT) for evaluating the regulatory impacts. The combustion devices considered in the regulatory analysis included flares, boilers, and thermal incinerators. These devices were determined to attain at least 98 percent destruction efficiency (the control level assumed in the regulatory analysis).

The regulatory analysis was based on the control of varying numbers of distillation units described in a statistical profile. The profile used in the analysis was constructed from data on the distillation units tabulated in Appendix C. The regulatory analysis examined the impacts of applying combustion control to increasing numbers of distillation units in the

statistical profile (corresponding to increasing levels of control across the entire profile). This method of analysis simulates control alternatives that range from control of no new units to control of all new units. In order to choose which units would be controlled first, the units in the profile were ranked. The ranking of distillation units for control was based on the total resource effectiveness (TRE), a value relating the cost of combustion control for the unit to the VOC destroyed by the combustion control. Those units exhibiting the smaller TRE values were selected for control first.

As is detailed in Appendix G, a particular TRE value can be selected to serve as a limit for requiring combustion control. When used in a standard, TRE values below the limit would dictate use of combustion control. And values above the limit would indicate that a higher level of control was already in place for purposes such as product recovery or that the distillation column had inherently small VOC emissions that proved extremely costly to control. The TRE ranking was a primary tool used in examining regulatory alternatives.

## 1.2 ENVIRONMENTAL IMPACTS

When applied to a given distillation unit, the combustion devices examined as BDT can achieve 98 percent destruction of VOC contained in the vent stream. Thus, the control levels achieved in the regulatory analysis ranged from the baseline control level of about 81 percent to the 98 percent control level assuming control of all distillation units. In addition, other impacts of the regulatory alternatives (water pollution, solid waste, energy) were examined. A matrix describing the impacts of the extremes of the regulatory analysis (no control, total control) is presented in Table 1-1.

In the absence of NSPS (baseline control level), VOC emissions from projected new, modified, or reconstructed facilities would be 51,000 Mg/yr (56,000 tons/yr). The regulatory analysis considered alternatives that would result in VOC emission reductions up to 46,000 Mg/yr (50,000 tons/yr). The upper bound on the control alternatives examines represents control of

TABLE 1-1. MATRIX OF ENVIRONMENTAL AND ECONOMIC IMPACTS FOR THE EXTREMES OF REGULATORY ALTERNATIVES CONSIDERED

| Administrative Action | Air Impact | Water Impact | Solid Waste Impact | Energy Impact | Economic Impact |
|---|---|---|---|---|---|
| No NSPS | 0 | 0 | 0 | 0 | 0 |
| Control All Units | +4 | -1 | -1 | -1 to +1 | -1 to -2 |

Key: 0 No Impact
1 Negligible Impact
2 Small Impact
3 Moderate Impact
4 Large Impact
+ Beneficial Impact
- Adverse Impact

about 89 percent of the VOC emissions not currently controlled under the baseline assumptions. Increases in other air pollutants as a result of the VOC emissions controls examined are considered negligible. And no direct solid wastes are expected to result from implementation of any of the regulatory alternatives.

No increase in total plant wastewater was projected since there is no organic wastewater effluent associated with the combustion devices considered in the regulatory analysis. Potential water pollution could result where additional product recovery is employed to reduce emissions. Carbon adsorption and gas absorption are the only product recovery techniques currently in use in the industry which have an associated organic wastewater effluent. Based on past industry experience, very few new distillation facilities are expected to employ carbon adsorption or gas absorption. Therefore, the wastewater generated as a result of the regulatory alternatives was expected to be minimal.

The impact on the projected national energy usage depends upon the regulatory alternative considered (degree of overall control) and the BDT assumed (flare, boiler, incinerator). For the regulatory extreme of control of all distillation units, the projected national energy usage in the fifth year ranged from 1.2 billion MJ/yr (190 thousand barrels of fuel oil equivalent) for a flare preference on nonhalogenated streams to a savings of 2.9 billion MJ/yr (460 thousand barrels of fuel oil equivalent) for a boiler preference on nonhalogenated streams. For both estimates, incinerators were assumed to be used only for distillation vent streams containing corrosive compounds.

## 1.3 ECONOMIC IMPACT

The projected annualized costs of the regulatory alternatives depend upon the degree of control considered and the BDT examined. As was done for the energy impacts, a range of annualized costs resulted from considering a flare preference and a boiler preference for control of non-corrosive streams in the statistical profile. For control of all units, the projected annualized costs in the fifth year ranged from about $20 million for the

flare preference to about $0.2 million for the boiler preference. Almost all annualized costs for boilers were credits due to the energy savings resulting from combustion of VOC as a supplement to the fuel required.

An economic screening analysis (see Chapter 9 and Appendix I) based on worst case costing of combustion control (assuming incineration of all streams in a plant, high vent stream flowrates, etc.) indicated that most of the 219 chemicals considered under the scope of this program would comfortably pass a 5 percent price increase criterion. Closer analysis of the few chemicals failing the initial screening indicated that all chemicals that would be affected by NSPS for distillations operations could pass the 5 percent increase criterion. And the vast majority could pass more stringent price increase criteria.

# 2. INTRODUCTION

## 2.1 BACKGROUND AND AUTHORITY FOR STANDARDS

Before standards of performance are proposed as a Federal regulation, air pollution control methods available to the affected industry and the associated costs of installing and maintaining the control equipment are examined in detail. Various levels of control based on different technologies and degrees of efficiency are examined. Each potential level of control is studied by EPA as a prospective basis for a standard. The alternatives are investigated in terms of their impacts on the economics and well-being of the industry, the impacts on the national economy, and the impacts on the environment. This document summarizes the information obtained through these studies so that interested persons will be able to see the information considered by EPA in the development of the proposed standard.

Standards of performance for new stationary sources are established under Section 111 of the Clean Air Act (42 U.S.C. 7411) as amended, hereinafter referred to as the Act. Section 111 directs the Administrator to establish standards of performance for any category of new stationary source of air pollution which ". . . causes, or contributes significantly to air pollution which may reasonably be anticipated to endanger public health or welfare."

The Act requires that standards of performance for stationary sources reflect ". . . the degree of emission reduction achievable which (taking into consideration the cost of achieving such emission reduction, and any nonair quality health and environmental impact and energy requirements) the Administrator determines has been adequately demonstrated for that category of sources." The standards apply only to stationary sources, the construction or modification of which commences after regulations are proposed by publication in the Federal Register.

The 1977 amendments to the Act altered or added numerous provisions that apply to the process of establishing standards of performance.

1. EPA is required to list the categories of major stationary sources that have not already been listed and regulated under standards of performance. Regulations must be promulgated for these new categories on the following schedule:

   a. 25 percent of the listed categories by August 7, 1980.

   b. 75 percent of the listed categories by August 7, 1981.

   c. 100 percent of the listed categories by August 7, 1982.

A governor of a State may apply to the Administrator to add a category not on the list or may apply to the Administrator to have a standard of performance revised.

2. EPA is required to review the standards of performance every four years and, if appropriate, revise them.

3. EPA is authorized to promulgate a standard based on design, equipment, work practice, or operational procedures when a standard based on emission levels is not feasible.

4. The term "standards of performance" is redefined, and a new term "technological system of continuous emission reduction" is defined. The new definitions clarify that the control system must be continuous and may include a low- or non-polluting process or operation.

5. The time between the proposal and promulgation of a standard under Section 111 of the Act may be extended to six months.

Standards of performance, by themselves, do not guarantee protection of health or welfare because they are not designed to achieve any specific air quality levels. Rather, they are designed to reflect the degree of emission limitation achievable through application of the best adequately demonstrated technological system of continuous emission reduction, taking into consideration the cost of achieving such emission reduction, any non-air-quality health and environmental impacts, and energy requirements.

Congress had several reasons for including these requirements. First, standards with a degree of uniformity are needed to avoid situations

where some States may attract industries by relaxing standards relative to other States. Second, stringent standards enhance the potential for long-term growth. Third, stringent standards may help achieve long-term cost savings by avoiding the need for more expensive retrofitting when pollution ceilings may be reduced in the future. Fourth, certain types of standards for coalburning sources can adversely affect the coal market by driving up the price of low-sulfur coal or effectively excluding certain coals from the reserve base because their untreated pollution potentials are high. Congress does not intend that new source performance standards contribute to these problems. Fifth, the standard-setting process should create incentives for improved technology.

Promulgation of standards of performance does not prevent State or local agencies from adopting more stringent emission limitations for the same sources. States are free under Section 116 of the Act to establish even more stringent emission limits than those established under Section 111 or those necessary to attain or maintain the National Ambient Air Quality Standards (NAAQS) under Section 110. Thus, new sources may in some cases be subject to limitations more stringent than standards of performance under Section 111, and prospective owners and operators of new sources should be aware of this possibility in planning for such facilities.

A similar situation may arise when a major emitting facility is to be constructed in a geographic area that falls under the prevention of significant deterioration of air quality provisions of Part C of the Act. These provisions require, among other things, that major emitting facilities to be constructed in such areas are to be subject to best available control technology. The term Best Available Control Technology (BACT), as defined in the Act, means

> . . . an emission limitation based on the maximum degree of reduction of each pollutant subject to regulation under this Act emitted from, or which results from, any major emitting facility, which the permitting authority, on a case-by-case basis, taking into account energy, environmental, and economic impacts and other costs,

> determines is achievable for such facility through application of production processes and available methods, systems, and techniques, including fuel cleaning or treatment or innovative fuel combustion techniques for control of each such pollutant. In no event shall application of "best available control technology" result in emissions of any pollutants which will exceed the emissions allowed by any applicable standard established pursuant to Section 111 or 112 of this Act. (Section 169(3))

Although standards of performance are normally structured in terms of numerical emission limits where feasible, alternative approaches are sometimes necessary. In some cases physical measurement of emissions from a new source may be impractical or exorbitantly expensive. Section 111(h) provides that the Administrator may promulgate a design or equipment standard in those cases where it is not feasible to prescribe or enforce a standard of performance. For example, emissions of hydrocarbons from storage vessels for petroleum liquids are greatest during tank filling. The nature of the emissions, high concentrations for short periods during filling and low concentrations for longer periods during storage, and the configuration of storage tanks make direct emission measurement impractical. Therefore, a more practical approach to standards of performance for storage vessels has been equipment specification.

In addition, Section 111(i) authorizes the Administrator to grant waivers of compliance to permit a source to use innovative continuous emission control technology. In order to grant the waiver, the Administrator must find: (1) a substantial likelihood that the technology will produce greater emission reductions than the standards require or an equivalent reduction at lower economic energy or environmental cost; (2) the proposed system has not been adequately demonstrated; (3) the technology will not cause or contribute to an unreasonable risk to the public health, welfare, or safety; (4) the governor of the State where the source is located consents; and (5) the waiver will not prevent the attainment or maintenance of any ambient standard. A waiver may have conditions attached to assure the source will not prevent attainment of

any NAAQS. Any such condition will have the force of a performance standard. Finally, waivers have definite end dates and may be terminated earlier if the conditions are not met or if the system fails to perform as expected. In such a case, the source may be given up to 3 years to meet the standards with a mandatory progress schedule.

## 2.2 SELECTION OF CATEGORIES OF STATIONARY SOURCES

Section 111 of the Act directs the Adminstrator to list categories of stationary sources. The Administrator ". . . shall include a category of sources in such list if in his judgment it causes, or contributes significantly to, air pollution which may reasonably be anticipated to endanger public health or welfare." Proposal and promulgation of standards of performance are to follow.

Since passage of the Clean Air Amendments of 1970, considerable attention has been given to the development of a system for assigning priorities to various source categories. The approach specifies areas of interest by considering the broad strategy of the Agency for implementing the Clean Air Act. Often, these "areas" are actually pollutants emitted by stationary sources. Source categories that emit these pollutants are evaluated and ranked by a process involving such factors as (1) the level of emission control (if any) already required by State regulations, (2) estimated levels of control that might be required from standards of performance for the source category, (3) projections of growth and replacement of existing facilities for the source category, and (4) the estimated incremental amount of air pollution that could be prevented in a preselected future year by standards of performance for the source category. Sources for which new source performance standards were promulgated or under development during 1977, or earlier, were selected on these criteria.

The Act amendments of August 1977 establish specific criteria to be used in determining priorities for all major source categories not yet listed by EPA. These are (1) the quantity of air pollutant emissions that each such category will emit, or will be designed to emit; (2) the extent to which each such pollutant may reasonably be anticipated to

endanger public health or welfare; and (3) the mobility and competitive nature of each such category of sources and the consequent need for nationally applicable new source standards of performance.

The Administrator is to promulgate standards for these categories according to the schedule referred to earlier.

In some cases it may not be feasible immediately to develop a standard for a source category with a high priority. This might happen when a program of research is needed to develop control techniques or because techniques for sampling and measuring emissions may require refinement. In the developing of standards, differences in the time required to complete the necessary investigation for different source categories must also be considered. For example, substantially more time may be necessary if numerous pollutants must be investigated from a single source category. Further, even late in the development process the schedule for completion of a standard may change. For example, inablility to obtain emission data from well-controlled sources in time to pursue the development process in a systematic fashion may force a change in scheduling. Nevertheless, priority ranking is, and will continue to be, used to establish the order in which projects are initiated and resources assigned.

After the source category has been chosen, the types of facilities within the source category to which the standard will apply must be determined. A source category may have several facilities that cause air pollution, and emissions from some of these facilities may vary from insignificant to very expensive to control. Economic studies of the source category and of applicable control technology may show that air pollution control is better served by applying standards to the more severe pollution sources. For this reason, and because there is no adequately demonstrated system for controlling emissions from certain facilities, standards often do not apply to all facilities at a source. For the same reasons, the standards may not apply to all air pollutants emitted. Thus, although a source category may be selected to be covered by a standard of performance, not all pollutants or facilities within that source category may be covered by the standards.

## 2.3 PROCEDURE FOR DEVELOPMENT OF STANDARDS OF PERFORMANCE

Standards of performance must (1) realistically reflect best demonstrated control practice; (2) adequately consider the cost, the non-air-quality health and environmental impacts, and the energy requirements of such control; (3) be applicable to existing sources that are modified or reconstructed as well as new installations; and (4) meet these conditions for all variations of operating conditions being considered anywhere in the country.

The objective of a program for developing standards is to identify the best technological system of continuous emission reduction that has been adequately demonstrated. The standard-setting process involves three principal phases of activity: (1) information gathering, (2) analysis of the information, and (3) development of the standard of performance.

During the information-gathering phase, industries are queried through a telephone survey, letters of inquiry, and plant visits by EPA representatives. Information is also gathered from many other sources, and a literature search is conducted. From the knowledge acquired about the industry, EPA selects certain plants at which emission tests are conducted to provide reliable data that characterize the pollutant emissions from well-controlled existing facilities.

In the second phase of a project, the information about the industry and the pollutants emitted is used in analytical studies. Hypothetical "model plants" are defined to provide a common basis for analysis. The model plant definitions, national pollutant emission data, and existing State regulations governing emissions from the source category are then used in establishing "regulatory alternatives." (For the distillation standard, there are a few deviations from this model plant and regulatory analysis approach, as described in Chapters 6 through 8.) These regulatory alternatives are essentially different levels of emission control.

EPA conducts studies to determine the impact of each regulatory alternative on the economics of the industry and on the national economy, on the environment, and on energy consumption. From several possibly

applicable alternatives, EPA selects the single most plausible regulatory alternative as the basis for a standard of performance for the source category under study.

In the third phase of a project, the selected regulatory alternative is translated into a standard of performance, which, in turn, is written in the form of a Federal regulation. The Federal regulation, when applied to newly constructed plants, will limit emissions to the levels indicated in the selected regulatory alternative.

As early as is practical in each standard-setting project, EPA representatives discuss the possibilities of a standard and the form it might take with members of the National Air Pollution Control Techniques Advisory Committee. Industry representatives and other interested parties also participate in these meetings.

The information acquired in the project is summarized in the Background Information Document (BID). The BID, the standard, and a preamble explaining the standard are widely circulated to the industry being considered for control, environmental groups, other government agencies, and offices within EPA. Through this extensive review process, the points of view of expert reviewers are taken into consideration as changes are made to the documentation.

A "proposal package" is assembled and sent through the offices of EPA Assistant Administrators for concurrence before the proposed standard is officially endorsed by the EPA Administrator. After being approved by the EPA Administrator, the preamble and the proposed regulation are published in the Federal Register.

As a part of the Federal Register announcement of the proposed regulation, the public is invited to participate in the standard-setting process. EPA invites written comments on the proposal and also holds a public hearing to discuss the proposed standard with interested parties. All public comments are summarized and incorporated into a second volume of the BID. All information reviewed and generated in studies in support of the standard of performance is available to the public in a "docket" on file in Washington, D.C.

Comments from the public are evaluated, and the standard of performance may be altered in response to the comments.

The significant comments and EPA's position on the issues raised are included in the "preamble" of a promulgation package," which also contains the draft of the final regulation. The regulation is then subjected to another round of review and refinement until it is approved by the EPA Administrator. After the Administrator signs the regulation, it is published as a "final rule" in the Federal Register.

## 2.4 CONSIDERATION OF COSTS

Section 317 of the Act requires an economic impact assessment with respect to any standard of performance established under Section 111 of the Act. The assessment is required to contain an analysis of: (1) the costs of compliance with the regulation, including the extent to which the cost of compliance varies depending on the effective date of the regulation and the development of less expensive or more efficient methods of compliance; (2) the potential inflationary or recessionary effects of the regulation; (3) the effects the regulation might have on small business with respect to competition; (4) the effects of the regulation on consumer costs; and (5) the effects of the regulation on energy use. Section 317 also requires that the economic impact assessment be as extensive as practicable.

The economic impact of a proposed standard upon an industry is usually addressed both in absolute terms and in terms of the control costs that would be incurred as a result of compliance with typical, existing State control regulations. An incremental approach is necessary because both new and existing plants would be required to comply with State regulations in the absence of a Federal standard of performance. This approach requires a detailed analysis of the economic impact from the cost differential that would exist between a proposed standard of performance and the typical State standard.

Air pollutant emissions may cause water pollution problems, and captured potential air pollutants may pose a solid waste disposal problem. The total environmental impact of an emission source must, therefore, be analyzed and the costs determined whenever possible.

A thorough study of the profitability and price-setting mechanisms of the industry is essential to the analysis so that an accurate estimate of potential adverse economic impacts can be made for proposed standards. It is also essential to know the capital requirements for pollution control systems already placed on plants so that the additional capital requirements necessitated by these Federal standards can be placed in proper perspective. Finally, it is necessary to assess the availability of capital to provide the additional control equipment needed to meet the standards of performance.

## 2.5 CONSIDERATION OF ENVIRONMENTAL IMPACTS

Section 102(2)(C) of the National Environmental Policy Act (NEPA) of 1969 requires Federal agencies to prepare detailed environmental impact statements on proposals for legislation and other major Federal actions significantly affecting the quality of the human environment. The objective of NEPA is to build into the decisionmaking process of Federal agencies a careful consideration of all environmental aspects of proposed actions.

In a number of legal challenges to standards of performance for various industries, the United States Court of Appeals for the District of Columbia Circuit has held that environmental impact statements need not be prepared by the Agency for proposed actions under Section 111 of the Clean Air Act. Essentially, the Court of Appeals has determined that the best system of emission reduction requires the Administrator to take into account counter-productive environmental effects of a proposed standard, as well as economic costs to the industry. On this basis, therefore, the Court established a narrow exemption from NEPA for EPA determination under Section 111.

In addition to these judicial determinations, the Energy Supply and Environmental Coordination Act (ESECA) of 1974 (PL-93-319) specifically exempted proposed actions under the Clean Air Act from NEPA requirements. According to Section 7(c)(1), "No action taken under the Clean Air Act shall be deemed a major Federal action significantly affecting the

quality of the human environment within the meaning of the National Environmental Policy Act of 1969." (15 U.S.C. 793(c)(1)).

Nevertheless, the Agency has concluded that the preparation of environmental impact statements could have beneficial effects on certain regulatory actions. Consequently, although not legally required to do so by Section 102(2)(C) of NEPA, EPA has adopted a policy requiring that environmental impact statements be prepared for various regulatory actions, including standards of performance developed under Section 111 of the Act. This voluntary preparation of environmental impact statements, however, in no way legally subjects the Agency to NEPA requirements.

To implement this policy, a separate section in this document is devoted solely to an analysis of the potential environmental impacts associated with the proposed standards. Both adverse and beneficial impacts in such areas as air and water pollution, increased solid waste disposal, and increased energy consumption are discussed.

## 2.6 IMPACT ON EXISTING SOURCES

Section 111 of the Act defines a new source as ". . . any stationary source, the construction or modification of which is commenced . . ." after the proposed standards are published. An existing source is redefined as a new source if "modified" or "reconstructed" as defined in amendments to the general provisions of Subpart A of 40 CFR Part 60, which were promulgated in the Federal Register on December 16, 1975 (40 FR 58416).

Promulgation of a standard of performance requires States to establish standards of performance for existing sources in the same industry under Section 111(d) of the Act if the standard for new sources limits emissions of a designated pollutant (i.e., a pollutant for which air quality criteria have not been issued under Section 108 or which has not been listed as a hazardous pollutant under Section 112). If a State does not act, EPA must establish such standards. General provisions outlining procedures for control of existing sources under Section 111(d) were promulgated on November 17, 1975, as Subpart B of 40 CFR Part 60 (40 FR 53340).

## 2.7 REVISION OF STANDARDS OF PERFORMANCE

Congress was aware that the level of air pollution control achievable by any industry may improve with technological advances. Accordingly, Section 111 of the Act provides that the Administrator ". . . shall, at least every four years, review and, if appropriate, revise . . ." the standards. Revisions are made to assure that the standards continue to reflect the best systems that become available in the future. Such revisions will not be retroactive, but will apply to stationary sources constructed or modified after the proposal of the revised standards.

# 3. VOC EMISSIONS FROM DISTILLATION OPERATIONS AT ORGANIC CHEMICAL MANUFACTURING PLANTS

The major processing steps employed in organic chemical manufacturing plants can be classified in two broad categories: conversion and separation. Conversion processes are chemical reactions that alter the molecular structure of the compounds involved. Separation operations divide mixtures into distinct fractions. A variety of unit operations such as filtration, crystallization, distillation or extraction can be used for separation. Selection of the separation technique depends upon the physical characteristics of the compounds in the mixture (thermal stability, boiling point, melting point, solubility) and the desired purity of the fractions. The predominant separation technique at large scale organic chemical manufacturing plants is distillation.

Distillation is a unit operation used to separate one or more inlet feed streams into two or more outlet product streams, each having constituent concentrations different from the concentrations found in the inlet feed stream. The emissions of volatile organic compounds (VOC) from distillation units depend upon the operating conditions. The physical properties of compounds being separated and economic considerations are the primary factors used in establishing the operating conditions of distillation units.

This chapter describes the use of distillation operations in organic chemical manufacturing plants. This chapter also includes a general discussion of distillation operations and the associated VOC emissions from distillation vent streams. In the final section of this chapter, the baseline control profile is discussed and the baseline control level is established.

## 3.1 GENERAL INDUSTRY INFORMATION

Most organic chemicals are manufactured in a multi-level system of chemical processes which is based on about 15 feedstock chemicals. These feedstocks are processed through one or more process levels and result in hundreds of intermediate or finished chemicals. These feedstocks originate from three basic raw materials: crude oil, natural gas, and coal. Basic raw materials for various feedstock chemicals are presented in Table 3-1. Figure 3-1 shows the highly integrated supply system for these feedstock chemicals from the three basic raw materials.

The chemical industry may be described in terms of an expanding system of production stages. Refineries, natural gas plants and coal tar distillation plants represent the first stage of the production system. As illustrated in Figure 3-1, these industries supply the feedstock chemicals from which most other organic chemicals are made. The organic chemical industry represents the remaining stages of the system. Chemical manufacturers use the feedstocks produced in the first stage to produce intermediate chemicals (secondary production stages can include parts of refineries) and final products. Manufacturing plants producing chemicals at the end of the production system are usually smaller operations since only a narrow spectrum of finished chemicals are being produced. The end products from these plants are heavier, less volatile compounds than the original feedstock. Thus, more effort is generally spent to prevent the valuable products from being wasted. The products from ethylene shown in Figure 3-2 are an example of a system of production stages from a feedstock chemical.

The production of feedstock chemicals is an extremely dynamic industry which may quickly change its sources of basic raw materials depending upon availability and costs. These facts are illustrated in the cases of benzene and ethylene. In 1967, 9.3 percent of the total domestically produced benzene came from coal tar; by 1979, economic and technological changes at petroleum refineries had reduced this share from coal tar to only 3.6 percent.[5,6] The same type of changes occurred for ethylene. Natural gas was the source of 75 percent of domestically produced ethylene in 1970,

TABLE 3-1. PERCENTAGE OF FEEDSTOCK CHEMICALS FROM VARIOUS SOURCES[a]

| Feedstock Chemical | Coal Tar Distillation | Refineries | Natural Gas Plants |
|---|---|---|---|
| Benzene | 3.6 | 96.4 | 0 |
| Butane | | 20 | 80 |
| 1-Butene | | X[b] | |
| 2-Butene | | X | X |
| Ethane | | 1.7 | 98.3 |
| Ethylene | | 46 | 54 |
| Isobutane | | | |
| Isopentane | | X | |
| Methane | | | X |
| Naphthalene | X | X | |
| Pentane | | X | |
| Propane | | 36.5 | 63.5 |
| Propylene | | X | X |
| Toluene | 0.9 | 99.1 | 0 |
| Xylenes | 1.4 | 98.6 | 0 |

[a]Benzene, toluene, xylene estimates based on 1979 data;[1] ethylene based on 1980 data;[2] ethane, propane based on 1980 data;[3] butane based on 1980 data.[4]

[b]X denotes a major source of this chemical, exact percentage figures are not available.

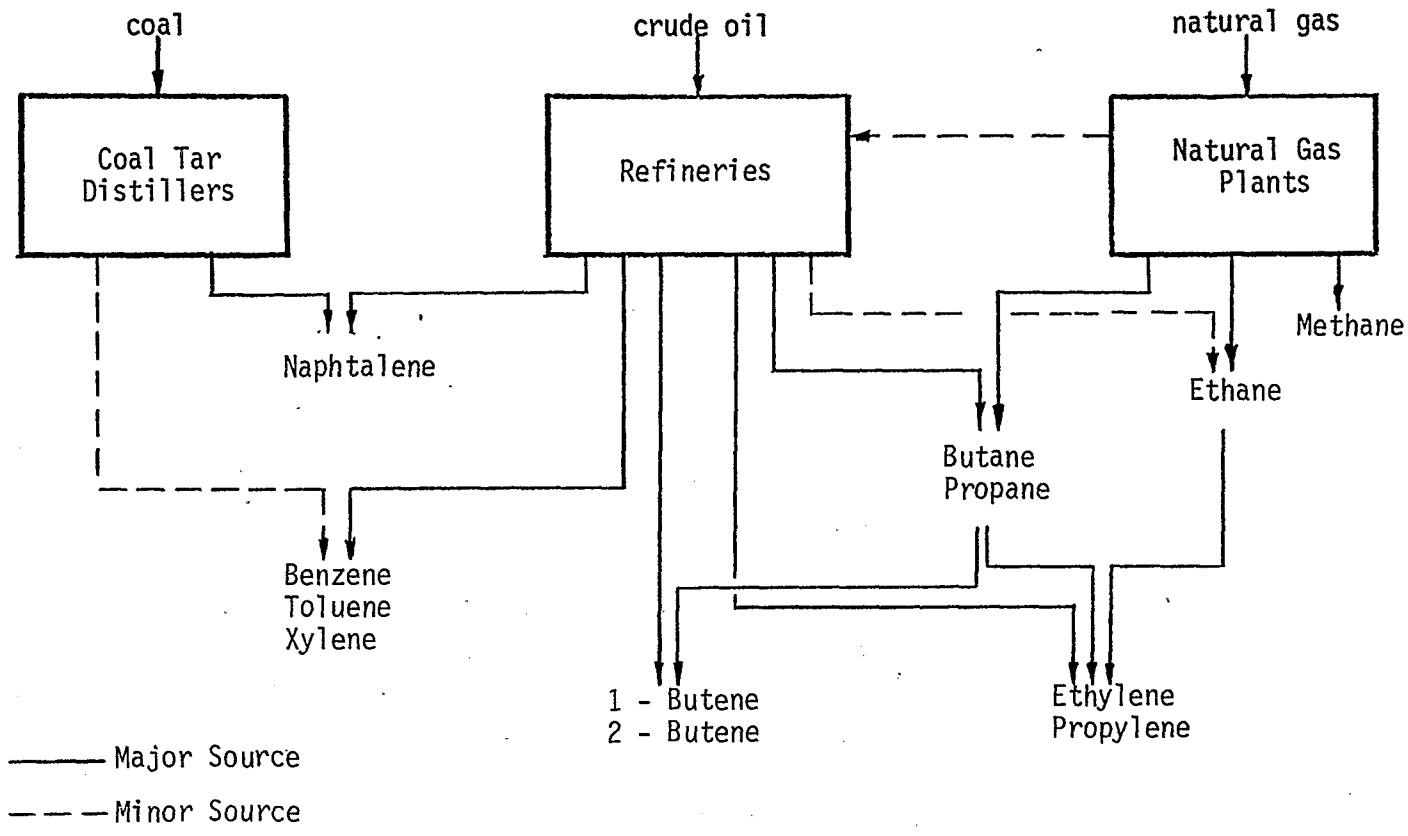


Figure 3-1. The interwoven nature of feedstocks for the organic chemicals manufacturing industry.

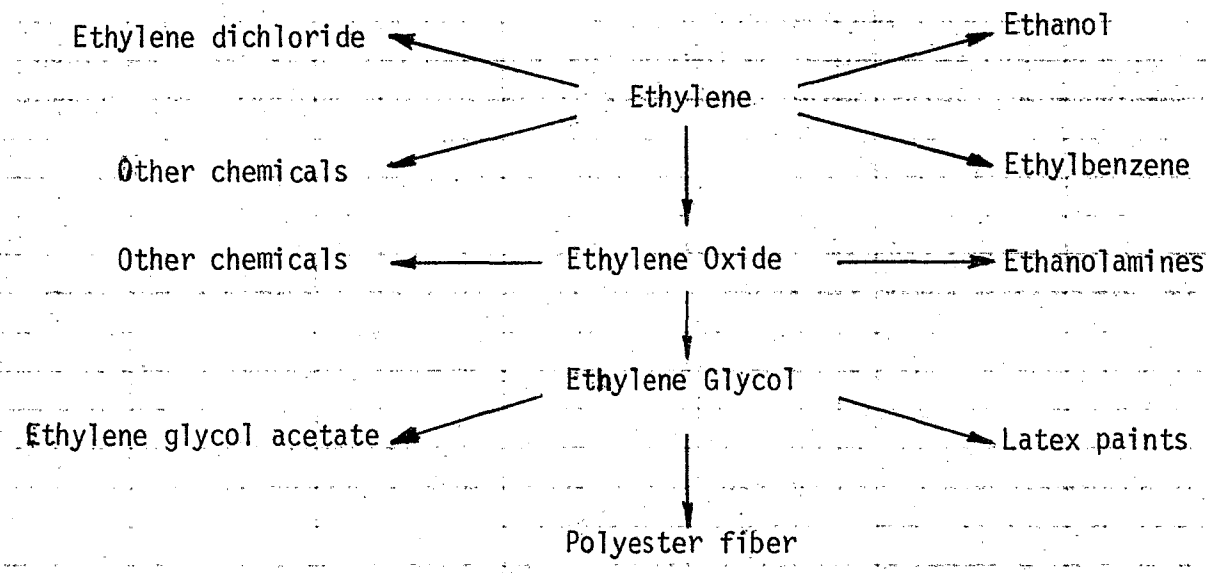


Figure 3-2. Chain of chemicals made from ethylene.

but by 1980 competition from petroleum refineries had reduced this source to only 54 percent.[7,8] The use of shale oil and coal as sources of basic raw materials is expected to change the future complexion of these feedstock chemicals producing industries.

The estimated total domestic production for all synthetic organic chemicals in 1979 was 103.5 x $10^6$ Mg (228 x $10^9$ lbs). This production total includes hundreds of different chemicals.[9] The scope of the Distillation Operations NSPS was chosen to encompass the higher production volume chemicals.

A relatively small number of chemicals dominate industry output, as illustrated in Table 3-2. The table shows the number of chemicals with production output above various production levels (i.e. chemicals with total national production greater than the listed production level). A national production level of 45,400 Mg/yr (100 million lb/yr) was used to define the segment of the organic chemical manufacturing industry covered by the scope of the standards development program. The scope includes approximately 220 chemicals which account for close to 92 percent of total domestic chemical production. This list does not include polymers, coal tar distillation products, chemicals extracted from natural sources, or chemicals produced totally by biological synthesis since these production processes are not within the intended scope of this program. A detailed discussion of the industry structure and end use patterns of the chemicals is provided in Section 9.1. Appendix E presents the list of chemicals considered in this study of VOC emissions from distillation operations.

Even limiting the scope of this study to about 220 chemical, extraordinary amounts of time and resources would still be required to study each chemical as a separate industry. Furthermore, organic chemical manufacturing plants have exhibited the ability to develop quickly process operations that take best advantage of raw material availability and costs or recent technologies. New and more economical processes are continuously being introduced to replace outdated processes. The nature of the organic chemical industry would make it extremely difficult (perhaps even impossible) to develop standards for all of the individual chemicals

TABLE 3-2. ESTIMATED PRODUCTION AND CHEMICAL COVERAGE FOR VARIOUS PRODUCTION LEVELS[10]

| Production Level Mg/yr (million lb/year) | Number of Chemicals[a] | Percentage of National Production Covered |
|---|---|---|
| 453,600 (1,000) | 63 | N/A |
| 226,800 (500) | 102 | N/A |
| 113,400 (250) | 155 | N/A |
| 45,400 (100) | 219 | 92 |
| 27,200 (60) | 283 | 94 |
| 13,600 (30) | 410 | N/A |
| 9,100 (20) | 506 | N/A |
| 4,500 (10) | 705 | 97 |

[a]This number signifies the number of chemicals with national production greater than the production level considered.

produced. Thus, the approach taken in this study was to examine VOC emissions from a single unit operation. Distillation as a unit operation is common throughout the organic chemical industry and is a fundamental processing procedure. And some of the control techniques described in Chapter 4 are generally applicable to all distillation operations.

## 3.2 DISTILLATION

Distillation has been used as a separation and purification process for thousands of years. Fresh water was produced by distilling sea water in a sponge condenser around 300 A.D. Earlier historical description of production procedures of essential oils, perfumes, and medicines indicate that some form of distillation was probably known 1000 to 2000 years prior to sea water distillation.

Today, distillation is the most commonly used separation and purification procedure in refineries and large organic chemical manufacturing plants. The fundamental operating principles for a distillation column are the same regardless of the application. This section briefly discusses some of the fundamental principles involved in distillation to provide a better understanding of operating characteristics of distillation units and causes of VOC emissions from these units.

### 3.2.1 Types of Distillation

Distillation is an operation separating one or more feed stream(s)* into two or more product streams, each product stream having component concentrations different from those in the feed stream(s). The separation is achieved by the redistribution of the components between the liquid- and vapor-phase as they approach equilibrium within the distillation unit. The more volatile component(s) concentrate in the vapor-phase while the less volatile components(s) concentrate in the liquid-phase. Both the vapor- and liquid-phase originate predominately by vaporization and condensation of the feed stream.

---

*For batch distillation, the word "charge" should be used in place of "stream", wherever applicable.

Distillation systems can be divided into subcategories according to the operating mode, the operating pressure, the number of distillation stages, the introduction of inert gases, and the use of additional compounds to aid separation. A distillation unit may operate in a continuous or a batch mode. The operating pressures can be below atmospheric (vacuum), atmospheric, or above atmospheric (pressure). Distillation can be a single stage or a multistage process. Inert gas, especially steam, is often introduced to improve separation. Finally, compounds are often introduced to aid in distilling hard to separate mixture constituents (azeotropic and extractive distillation).

Single stage batch distillation is not common in large scale chemical production but is widely used in laboratories and pilot plants. Separation is achieved by charging a still with material, applying heat and continuously removing the evolved vapors. In some instances, steam is added or pressure is reduced to enhance separation.

Single stage continuous distillation is referred to as flash distillation (Figure 3-3). It is generally a direct separation of a component mixture based on a sudden change in pressure. Since it is a rapid process, steam or other components are not added to improve separation. A flash distillation unit is frequently the first separation step for a stream from the reactor. The heated products from a reaction vessel are pumped to an expansion chamber. The pressure drop across the valve, the upstream temperature, and the expansion chamber pressure govern the separation achieved. The light ends quickly vaporize and expand away from the heavier bottom fractions which remain in the liquid-phase. The vapors rise to the top of the unit and are removed. Bottoms are pumped to the next process step.

Fractionating distillation is a multistage distillation operation. It is the most commonly used type of distillation unit in large organic chemical plants, and it can be a batch or a continuous operation. At times, inert carriers (such as steam) are added to the distillation column. Fractionating distillation is accomplished by using trays, packing, or other internals in a vertical column to provide multiple intimate contacts of

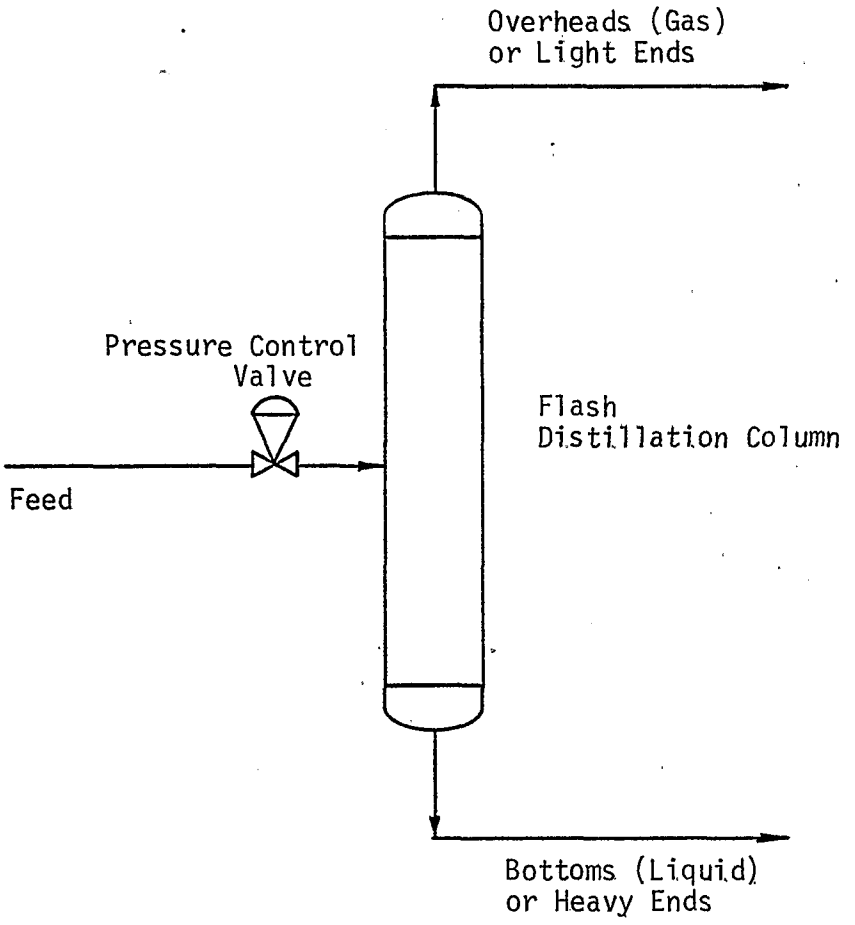


Figure 3-3. Flash distillation.

ascending vapor and descending liquid streams. A simplified block flow diagram of a fractionation column is shown in Figure 3-4. The light end vapors evolving from the column are condensed and collected in an accumulator tank. Part of the distillate is returned to the top of the column so it can fall countercurrent to the rising vapors. For difficult separations, additional compounds may be added to achieve the desired separation. This is commonly referred to as extractive distillation and is typically used in lubricant oil refining. A desorption column is very similar to a fractionating distillation column except that it does not use a reflux condenser.

### 3.2.2 Fundamental Distillation Concepts

The emissions from distillation units are dependent on the size, operating conditions and types of components present. Therefore, the design parameters and selection of operating conditions are discussed in this section to provide a better understanding of the emissions.

The separation of a mixture of materials into one or more individual components by distillation is achieved by selecting a temperature and pressure that allow the coexistence of vapor and liquid phases in the distillation column. Distillation is described as a mass-transfer operation involving the transfer of a component through one phase to another on a molecular scale. The mass transfer is a result of a concentration difference or gradient stimulating the diffusing substance to travel from a high concentration zone to one of lower concentration until equilibrium is reached. The maximum relative concentration difference between distillation materials in the vapor- and liquid-phases occurs when a state of equilibrium is reached. The equilibrium state is reached when the concentrations of components in the vapor-phase and liquid-phase, at a given temperature and pressure, do not change regardless of the length of time the phases stay in contact.

For an ideal system, the equilibrium relationship is determined using the laws of Dalton and Raoult. Dalton's law states that the total pressure of a mixture of gases is equal to the sum of the partial pressures of each gas constituent:

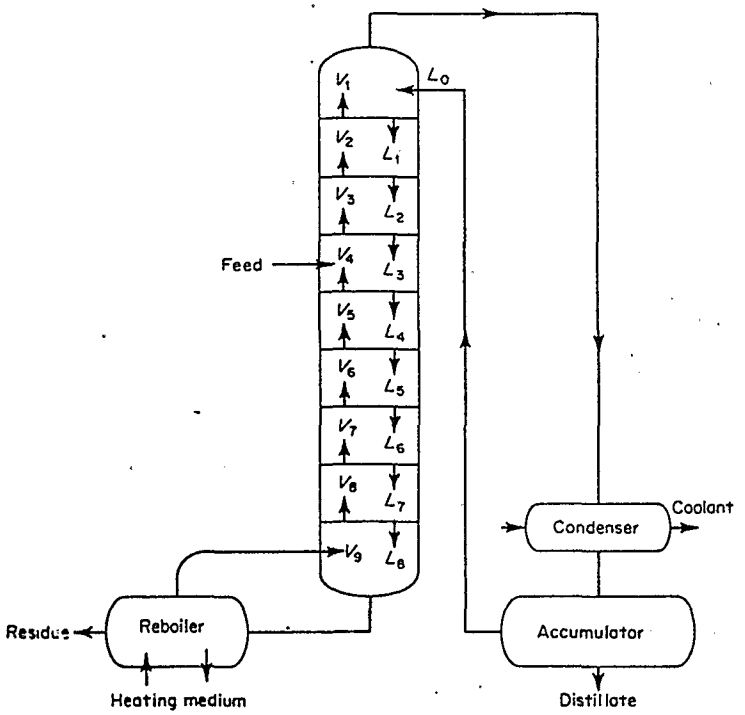


Figure 3-4. A conventional fractionating column.

$$P_t = \sum_{1}^{n} p_i \qquad (3.1)$$

where:

$P_t$ = Total pressure.
$p_i$ = Partial pressure of each gas constituent.
$n$ = Number of constituents.

Dalton's law further states that the partial pressure of each ideal gas constituent is proportional to the mole fraction (relative percentage) of that gas in the mixture:

$$p_i = y_i P_t \qquad (3.2)$$

where:

$y_i$ = Mole fraction.

Raoult's law states the relationship for ideal solutions between the partial pressure of a mixture constituent in the vapor phase and its composition in the liquid-phase in contact. When the vapor phase is at equilibrium with the solution, the partial pressure of the evolved component is directly proportional to its vapor pressure (at the same temperature) and its mole fraction in the solution:

$$p_i = x_i p_i \qquad (3.3)$$

where:

$x_i$ = Mole fraction in the solution.
$p_i$ = Vapor pressure of the pure substance at the same temperature.

These statements may be combined to give an equilibrium vaporization ratio (K value). A simplified expression for this ratio is:

$$K_i = \frac{y_i}{x_i} \qquad (3.4)$$

This equilibrium constant is used to evaluate the properties that affect gas-liquid equilibrium conditions for individual components and mixtures. The K value represents the distribution ratio of a component between the vapor and liquid-phases at equilibrium. The K value for various materials may be calculated using thermodynamic equations of state or through empirical methods (suitably fitting developed data curves to experimental data). This constant is an extremely important tool for designing distillation units (determining required temperatures, pressures, and column size).

Another basic distillation concept is the separation factor or relative volatility ($\alpha_{ij}$) of system components. This is the equilibrium ratio of the mole fractions of component i to some component j in the vapor and liquid phase:

$$\alpha_{ij} = \frac{y_i}{x_i} / \frac{y_j}{x_j} \qquad (3.5)$$

It is expressed as the ratio of the vapor pressures for an ideal mixture:

$$\alpha_{ij} = \frac{P_i}{P_j} \qquad (3.6)$$

This ratio is a measure of the separability of the two components to be separated and is very important in designing distillation equipment. In the case of a binary system, the two components to be separated are the two components present in the feed. In a multicomponent system, the components to be separated are referred to as "heavy key" (HK) and "light key" (LK). The "heavy key" is the most volatile component desired to be present in significant quantities in the bottom products or the residue. Similarly, "light key" is the least volatile compound desired to be present in significant quantities in the overhead products. Generally, separation by distillation becomes uneconomical when the relative volatility of the light key and heavy key is less than 1.05.[11]

The operating temperature and pressure in a distillation unit are interrelated. A decision made for the value of one of these parameters also determines the value of the other parameter. Essentially, the pressure and temperature are chosen so that the dewpoint* condition for the overhead products and the bubble point** conditions for the bottom products can be present inside the distillation unit. The actual decision on these two conditions is predicated upon economic considerations and is made after evaluating the following items:

1. The relative volatility, $\alpha_{ij}$, of the components. A lower pressure in the column increases the value of $\alpha_{ij}$ and improves separation. This would result in a shorter fractionating column.

2. The effect of pressure on vapor volume in the distillation unit. The vapor volume increases as the pressure decreases, requiring a larger diameter vessel.

3. The effect of pressure on column wall thickness. Higher pressures require increased wall thickness and raise costs.

---

*The dew-point temperature is the temperature at which the first droplet of liquid is formed as the vapor mixture is cooled at constant pressure, and the dew-point pressure is that at which the first droplet of liquid is formed as the pressure is increased on the vapor at constant temperature.

Mathematically, the dew-point is defined by:

$$\sum_{1}^{n} x_i = 1.0 = \sum_{1}^{n} \frac{y_i}{K_i} \qquad (3.7)$$

**The bubble-point temperature is the temperature at which the first bubble of vapor is formed on heating the liquid at constant pressure. The bubble-point pressure is the pressure at which the first bubble of vapor is formed on lowering the pressure on the liquid at constant temperature.

Mathematically, the bubble-point is defined by:

$$\sum_{1}^{n} y_i = 1.0 = \sum_{1}^{n} K_i \, x_i \qquad (3.8)$$

4. Cost of achieving desired temperature and pressures. The cost of changing the pressure and that of changing the temperature are considered independently since these two costs are not proportional.

5. The thermal stability limit of the compounds being processed. Many compounds decompose, polymerize, or react when the temperature reaches some critical value. In such cases it is necessary to reduce the design pressure so that this critical reaction temperature is not be reached at any place in the distillation unit.

Data on the use of vacuum during distillation was compiled for a number of major chemicals to predict the use of vacuum for distillation. The physical properties of the compounds using vacuum during distillation were compared with those of compounds not using vacuum, with the following conclusions:

1. Compounds with a melting point less than -10°C and with a boiling point greater than 150°C are likely to be distilled under vacuum.

2. If the boiling point of a compound is less than 50°C then it is likely to be distilled at or above atmospheric pressure.

3. For the separation of compounds with boiling points between 50°C and 150°C, the use of vacuum depends on the thermal operable limit of the compound (i.e., temperature range in which the compound does not decompose, polymerize, or react).[12]

In designing a distillation system, once the operating temperature and pressure are established, the type of distillation is considered. Flash distillation is preferred for separation of components with a high relative volatility. Steam is the most frequently used heat source for column distillation since using a direct fired heater (although used in some instances) could create a dangerous situation. Steam is also used for distilling compounds that are thermally unstable or have high boiling points. Azeotropic and extractive distillation are used to separate compounds that are difficult to separate. For example, benzene is sometimes added in a distillation process to achieve separation of an alcohol-water mixture.

For a flash unit, the design of the flash vessel size is relatively straightforward. In the case of a fractionating unit design, once the column pressure and temperature are determined, the reflux ratio (fraction of total overhead condensate returned to column) is selected to ensure an adequate liquid phase in the distillation column for vapor enrichment. The number of trays (or height of column packing), column diameter, and auxiliary equipment (pumps, condenser, reboiler, and instruments) are then determined. The final decisions on all these items are based on engineering and economic trade offs. More detailed discussion on the design of distillation units is readily available in various chemical engineering texts.[13,14,15,16]

## 3.3 VOC EMISSION POINTS FROM DISTILLATION UNITS

The discussions on distillation column operating theory and design show the basic factors of column operation. Vapors separated from the liquid phase in a column rise out of the column to a condenser. The gases and vapors entering the condenser can contain VOC, water vapor, and noncondensibles such as oxygen ($O_2$), nitrogen ($N_2$), carbon dioxide ($CO_2$). The vapors and gases originate from vaporization of liquid feeds, dissolved gases in liquid feeds, inert carrier gases added to assist in distillation (only for inert carrier distillation), and air leaking into the column, especially in vacuum distillation. Most of gases and vapors entering the condenser are cooled enough to be collected as a liquid-phase. The noncondensibles ($O_2$, $N_2$, $CO_2$, and other organics with low boiling points), if present, are not usually cooled to the condensation temperature and are present as a gas stream at the end the of condenser. Portions of this gas stream are often recovered in devices such as scrubbers, adsorbers, and secondary condensers. Vacuum generating devices (pumps and ejectors), when used, might also affect the amount of noncondensibles. Some organics can be absorbed by condensed steam in condensers located after vacuum jets. In the case of oil-sealed vacuum pumps, the oil losses increase the VOC content of the noncondensibles exiting the vacuum pump. The noncondensibles from the last process equipment (condensers, pumps, ejectors, scrubbers, adsorbers, etc.) constitute

the emissions from the distillation unit unless they are controlled by combustion devices such as incinerators, flares, and boilers.

The most frequently encountered emission points from fractionation distillation operations are illustrated for several types of distillation units in Figures 3-5 to 3-8. These emission points are indicated as follows by the numbers in parentheses: condenser (1), accumulator (2), hot wells (3), steam jet ejectors (4), vacuum pump (5), and pressure relief valve (6). Emissions of VOC are created by the venting of noncondensible gases which concurrently carry out some hydrocarbons.

The total volume of gases emitted from a distillation operation depends upon air leaks into the vacuum column (reduced pressure increases leaks and increased size increases leaks), the volume of inert carrier gas used, gases dissolved in the feed, efficiency and operating conditions of the condenser and other process recovery equipment, and physical properties of the organic constituents. Knowledge of the quantity of air leaks and dissolved gases in the column in conjunction with information on organic vapor physical properties and condenser operating parameters allows estimation of the VOC emissions that may result from a given distillation unit operation.

The operating parameters for the industry vary to such a great extent that it is difficult to develop precise emission factors for distillation units. However, an extensive data base was gathered for organic chemical industry distillation units. The data base contains information on operating characteristics, emission controls, exit flows, and VOC emission characteristics. This data base, presented in Appendix C, was used to construct a National Emission Profile (NEP). This NEP provided the basis of examining the baseline control level and the various regulatory alternatives discussed in Chapter 6.

### 3.3.1 National Emission Profile (NEP)

The NEP was developed from an extensive data base for organic chemical plants available from surveys performed for EPA by Houdry Division of Air Products (1971-72)[17] and by IT Enviroscience (1977-80).[18] All data for distillation units from these surveys were verified through contacts with each chemical manufacturer. The NEP provides some insight into the types of

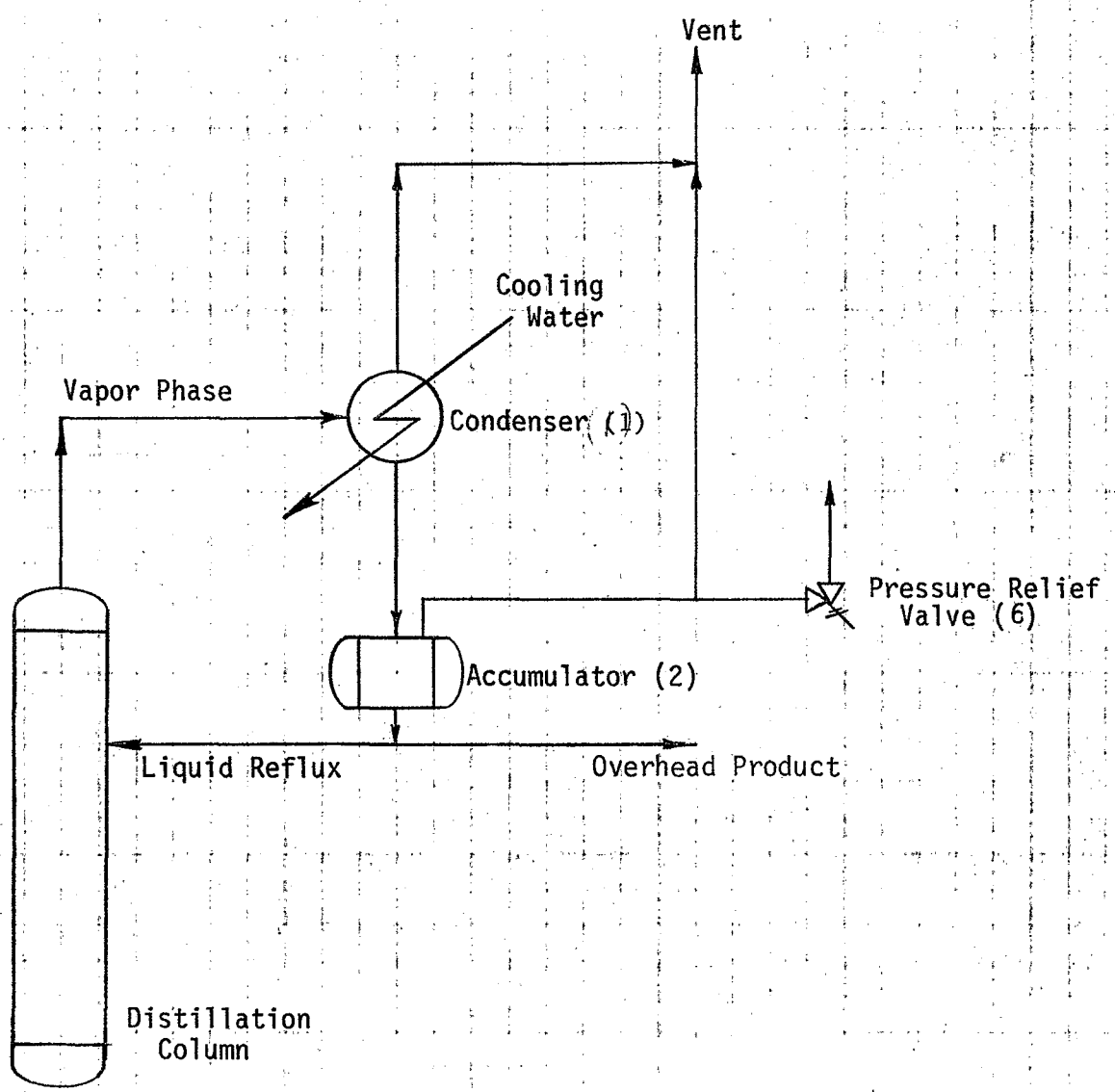


Figure 3-5. Potential VOC emission points for a nonvacuum distillation column.

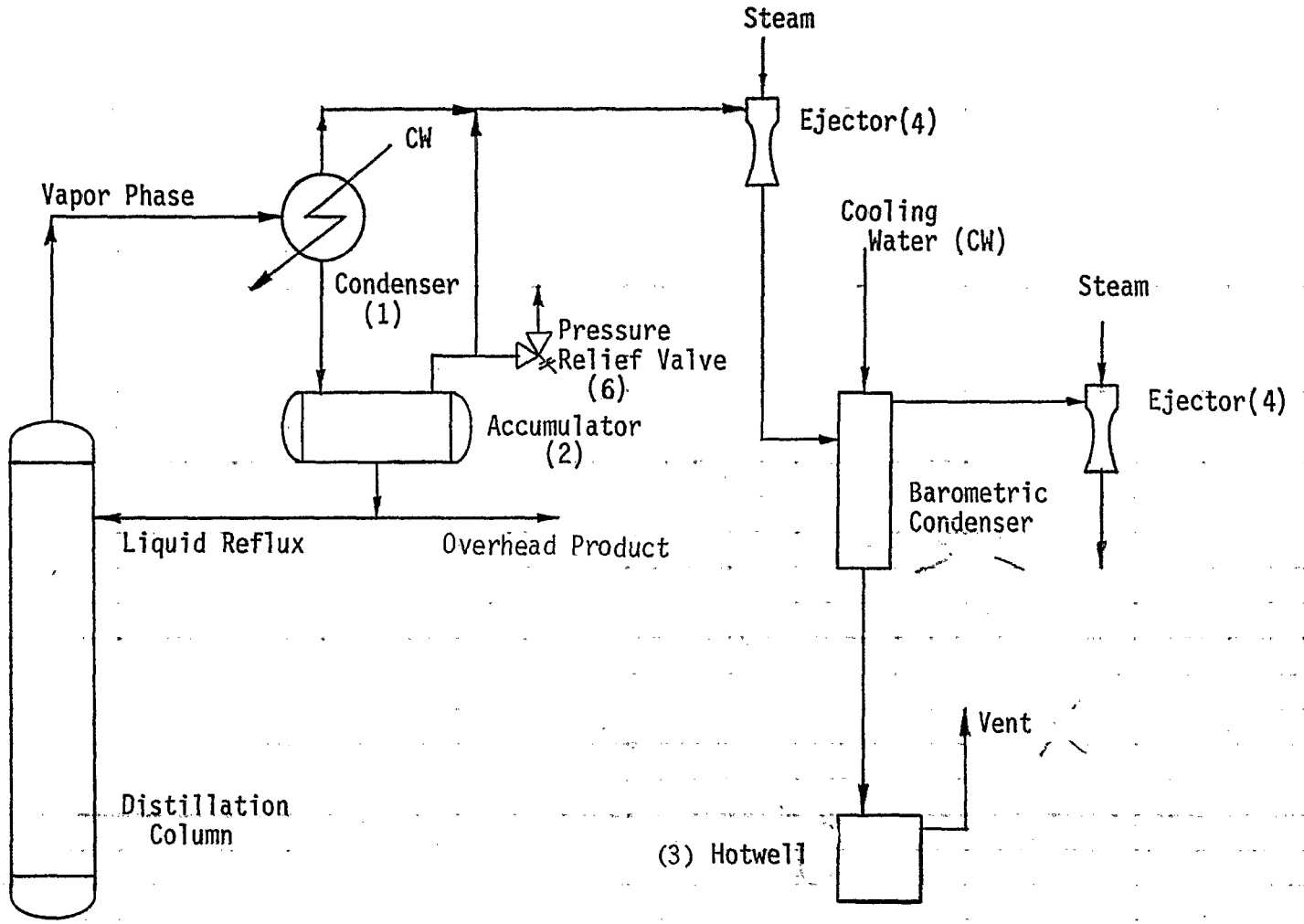


Figure 3-6. Potential VOC emission points for a vacuum distillation column using steam jet ejectors with barometric condenser.

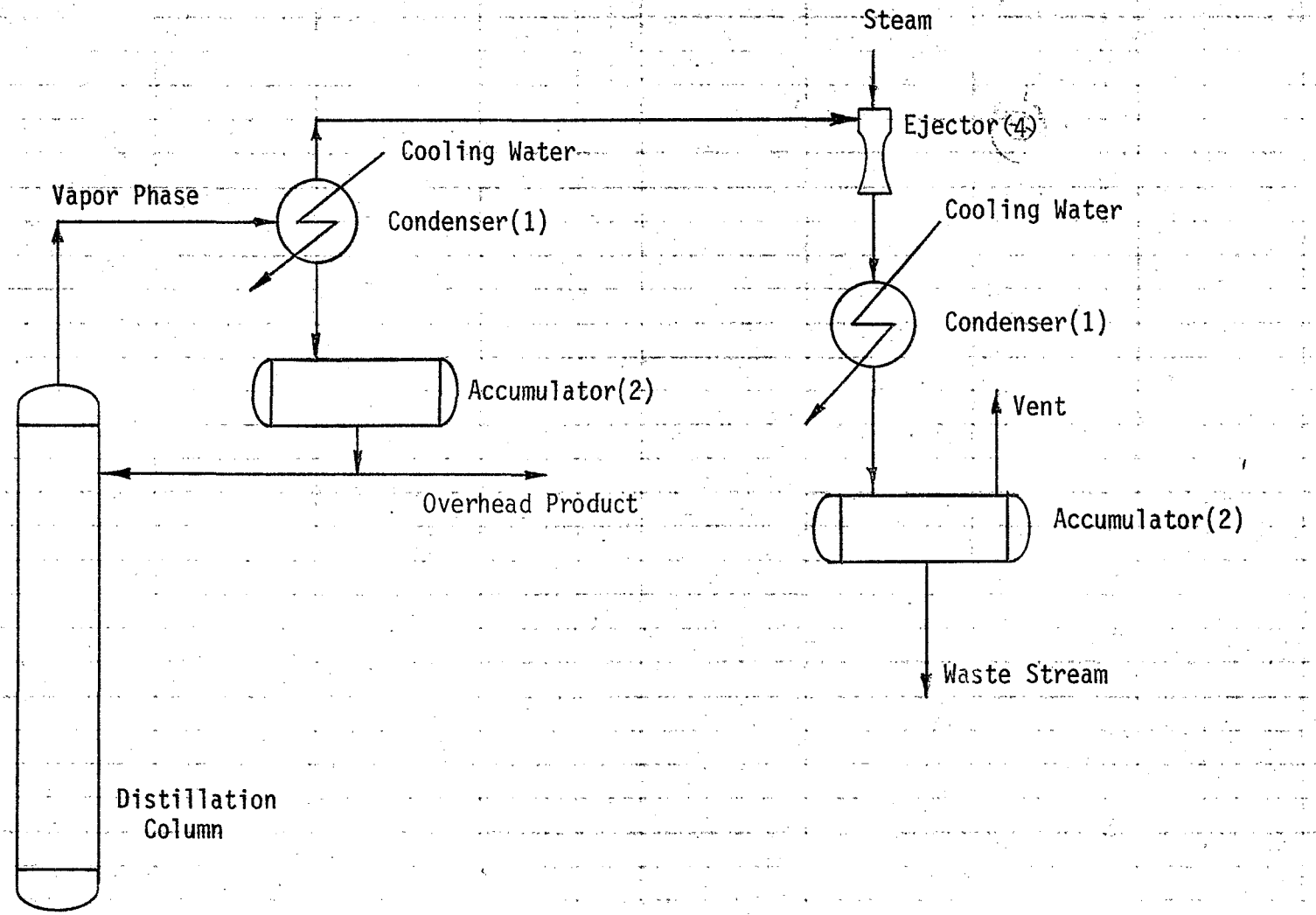


Figure 3-7. Potential VOC emission points for a vacuum distillation column using a steam jet ejector and surface condensers.

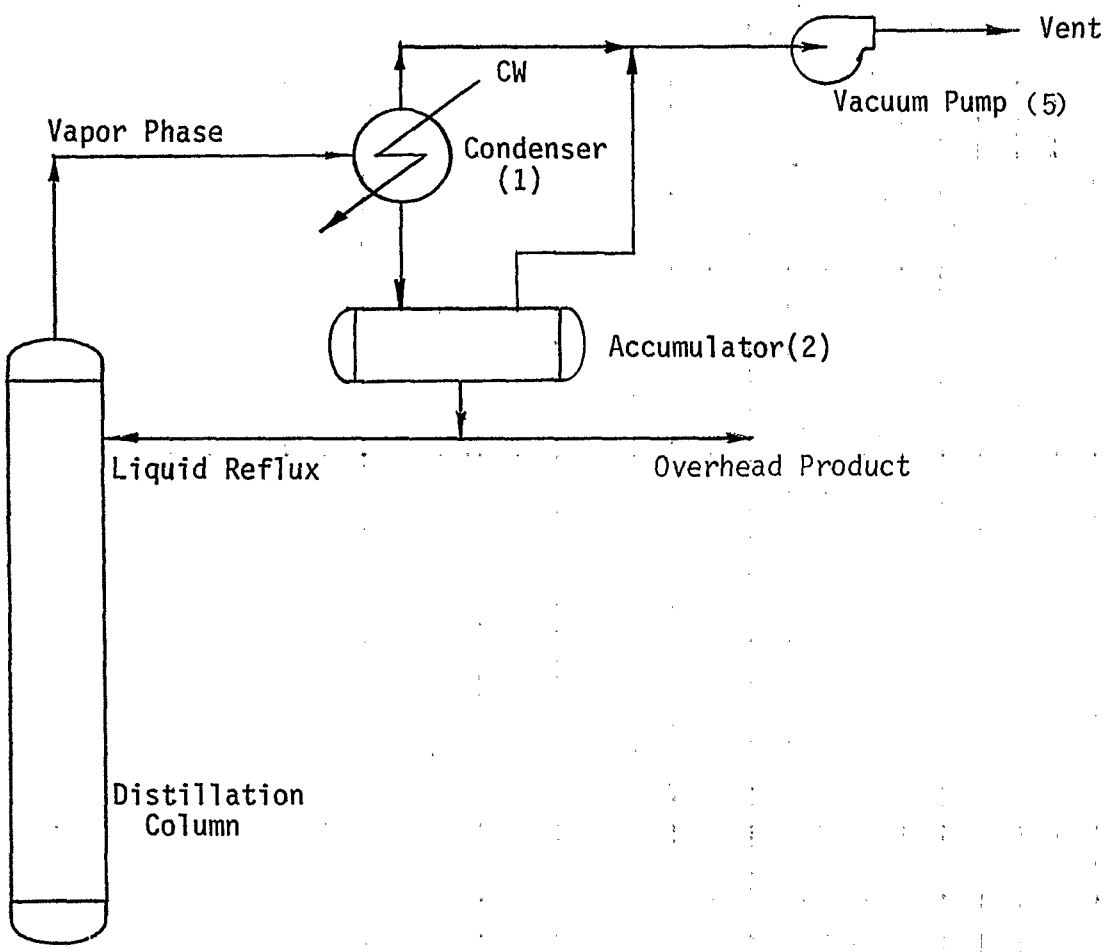


Figure 3-8. Potential VOC emission points for a vacuum distillation column using a vacuum pump.

distillation operations in use in organic chemical manufacturing and the control systems currently being used. Table 3-3 gives the total number and types of distillation units in the NEP and summarizes the combustion control and product recovery measures reportedly used.

The NEP contains information on the type of distillation involved, the product recovery and VOC control equipment, the vent stream characteristics, and the other distillation units in the plant. The vent stream characteristics listed for each column in the NEP (determined downstream of product recovery devices, but upstream of combustion devices) are:

1. Volumetric flowrate.
2. Heat content,
3. VOC emission rate.
4. VOC concentration.
5. Atomic concentrations as percents: carbon, nitrogen, hydrogen, oxygen, and chloride.
6. Average number of atoms per molecule.

Complete information on vent stream characteristics was not available for some of the reported distillation units. These columns were screened out of the regulatory analysis, since their regulatory impacts due to VOC control could not be calculated. Also screened out were units with zero flowrate (because no noncondensible gases were vented to the atmosphere) and units for which offgases were recycled to the manufacturing process. Only those distillation columns for which complete vent stream characterization was available for all columns in a plant were retained in the screened NEP. The screened NEP provides the basis of the regulatory analysis. Table 3-4 gives an overview of the screened NEP. The data lines from the NEP remaining in the screened NEP are marked in Appendix C.

### 3.3.2 Geographic Bias in the Screened NEP

Chemical plants in the screened NEP can be grouped into two broad categories: plants in states with State implementation plans (SIP) for emissions from distillation operations (Category 1), and plants in states with no regulations covering emissions from distillation operations (Category 2). The screened NEP contains 128 units (66 percent) in

TABLE 3-3. OVERVIEW OF THE NATIONAL EMISSION PROFILE

| | Number of Units | Percentage of Total |
|---|---|---|
| 1. Operating Pressure | | |
| a. Vacuum | 318 | 31 |
| b. Nonvacuum | 582 | 56 |
| c. Information Not Available[a] | 137 | 13 |
| | 1037 | 100 |
| 2. Mode of Operation | | |
| a. Batch | 4 | <1 |
| b. Continuous | 1033 | >99 |
| | 1037 | 100 |
| 3. Type of Unit | | |
| a. Flash | 37 | 3 |
| b. Fractionating | 1000 | 97 |
| | 1037 | 100 |
| 4. Installed Product Recovery Devices[b] | | |
| a. Scrubbers | 79 | 8 |
| b. Absorbers | 12 | 1 |
| c. Carbon adsorption | 5 | <1 |
| | 96 | 10 |
| 5. Installed Combustion Controls | | |
| a. Flares | 78 | 8 |
| b. Incinerators | 72 | 7 |
| c. Boilers | 9 | 1 |
| | 159 | 16 |
| 6. Units with no Flowrate | 231 | 22 |
| 7. Units with Emissions Recycled | 219 | 21 |

[a]For 13 percent of the 1037 total units, operating pressure information is not given and is reported as confidential.

[b]In addition to condensers.

TABLE 3-4. OVERVIEW OF THE SCREENED NATIONAL EMISSION PROFILE

| | |
|---|---|
| 1. Units Screened Out of NEP | |
| Total number of units in the NEP | 1037 |
| Units at plants with incomplete data[a] | 392 |
| Units with recycled emissions, or zero flowrate | 450 |
| Number of Units in Screened NEP | 195 |
| 2. Operating Characteristics of the Screened NEP | |
| Average offgas flowrate, $m^3$/min (scfm) | 1.0 (36) |
| Flow range, $m^3$/min (scfm) | 0.001-18 (0.005-637) |
| Average VOC emission rate, kg/hr (lb/hr), precontrolled[b] | 36 (78) |
| Average VOC emission rate, kg/hr (lb/hr), controlled[c] | 5.9 (13) |
| VOC emission range, kg/hr (lb/hr), precontrolled | 0-1670 (0-3668) |

[a]There are a number of plants in the NEP for which there were distillation units with insufficient data to permit calculation of VOC control costs.

[b]Calculated downstream of adsorbers, absorbers, and condensers, but upstream of combustion devices.

[c]Controlled VOC emission rates were estimated using a 98 percent destruction efficiency for flares, boilers, and incinerators (where it was indicated that control devices were being used).

Category 1, and 67 units (34 percent) in Category 2. Moreover, the total precontrolled emission rate of 6940 kg/hour (15,300 lb/hr) is composed of 77 percent from Category 1 and 23 percent from Category 2. Since available information shows that only 56 percent of all organic chemical plants are in Category 1 States, while 44 percent are in Category 2, the screened NEP data is weighted toward Category 1.[19]

## 3.4 BASELINE CONTROL LEVEL FOR DISTILLATION OPERATIONS

The baseline level of emissions control is defined as the control level that would exist in the affected industry in the absence of the NSPS. This level is established to facilitate comparison of the economic, energy, and environmental impacts of regulatory alternatives (Chapters 6-9).

A first consideration in establishing a baseline level is existing state regulations. Only four of the states with organic chemical plants have regulations applicable to distillation units in the organic chemical industry. These states are Texas, Louisiana, New Jersey, and Illinois, and account for about 55 percent of the existing plants producing the chemicals within the scope of this program. Texas requires facilities emitting more than either 100 lbs/day or 250 lbs/hr, depending on the true vapor pressure of the VOC, to incinerate the waste gas steam "properly" at 1300°F. This is equivalent to approximately 85 percent VOC reduction.[20] Louisiana also requires incineration of VOC at 1300°F, with a 0.3 second residence time, or control by other acceptable methods; however, control requirements may be waived if the offgas is not significant or will not support combustion without auxiliary fuel.[21] New Jersey uses a sliding scale, based on the degree of difficulty in controlling the VOC emission source, to establish allowable emission rates for individual sources. Depending on the vapor pressure, concentration, and amount of the waste stream VOC, the New Jersey regulation requires from 0 to 99.7 percent VOC reduction.[22] Illinois does not differentiate between organic solvents and organic compounds in an applicable regulation that limits VOC emissions to 8 lbs/hr unless these emission are reduced by 85 percent.[23] The remaining states do not have regulations for emissions from distillation units in chemical plants.

Often, the baseline control level selected is a weighted average of the control level required by State implementation plans (SIPs). Based on the screened NEP, the average control level for distillation units in States with applicable SIPs (Category 1) is significantly higher than the control level for distillation units in states without applicable SIPs (Category 2). And both categories exhibit control levels higher than the applicable SIPs for each category. The screened NEP shows an average control level of 90 percent for Category 1 and an average control level of 63 percent for Category 2 (assuming a control efficiency of 98 percent for flares, boilers, and incinerators). Controls are used in Category 2 states because there are high organic contents in the offgases from some distillation units and these organics can be recovered or used as fuel. Considerations such as OSHA regulations, odor problems, and other regulations may also play an important role.

Because of the geographic bias in the screened NEP, the level of control that would exist if no NSPS were developed would be overestimated by using the screened NEP directly. Investigation of the screened NEP shows an average control level of 90 percent for Category 1, 63 percent for Category 2, and 84 percent overall. While the 90 and 63 percent control levels are representative of the control levels in their respective categories, the 84 percent control level (a simple weighted average) may not be representative of the level for the total nationwide population of distillation columns. Therefore, it is preferable to examine the two categories separately and then consider the geographic bias in combining the categories for the national impact.

In order to investigate the two categories separately, the screened NEP was divided into two parts, one representing Category 1 (128 distillation units) and the other representing Category 2 (67 distillation units). The level of control was determined to be 90 percent in Category 1, and 63 percent in Category 2. Then, data on the number of organic chemical plants in each state was compiled to determine the number of chemical plants in each category. This number was related to the population of columns nationally. It was found that about 56 percent of all plants are in the

four states in Category 1 and 44 percent in the remaining states. Weighting factors to be applied to the individual units in the screened NEP were developed for each category by ratio of the percent of units in the category nationally to the percent of units in the category in the screened NEP. Finally, the national baseline control level was evaluated by taking a weighted average control level for the two categories, weighted according to the proportion of plants in each category in the screened NEP and in the nation. This procedure is illustrated in Figure 3-9 and the calculation is presented in Equation 3.9.

Baseline Control Level =

$$\begin{aligned}&(\text{Controlled Emissions}_{\text{Cat. 1}} \times \text{Weighting Factor}_{\text{Cat. 1}} + \\ &\text{Controlled Emissions}_{\text{Cat. 2}} \times \text{Weighting Factor}_{\text{Cat.}} \\ &\div (\text{Uncontrolled Emissions}_{\text{Cat. 1}} \times \text{Weighting Factor}_{\text{Cat. 1}} + \\ &\text{Uncontrolled Emissions}_{\text{Cat. 2}} \times \text{Weighting Factor}_{\text{Cat. 2}}) \qquad (3\text{-}9)\end{aligned}$$

This yields a baseline control level of 81 percent.

Together, the two data sets form a representative baseline control profile to be used as a basis for calculating the environmental and cost impacts of various regulatory alternatives. The estimation of impacts is based on the assumption that the baseline control profile, which is developed from information on existing distillation units, represents the future distillation vent stream characteristics. Chemical identities are not considered in the profile, nor is there claimed to be a one to one correspondence between a vent stream in the profile and an existing or new vent stream.

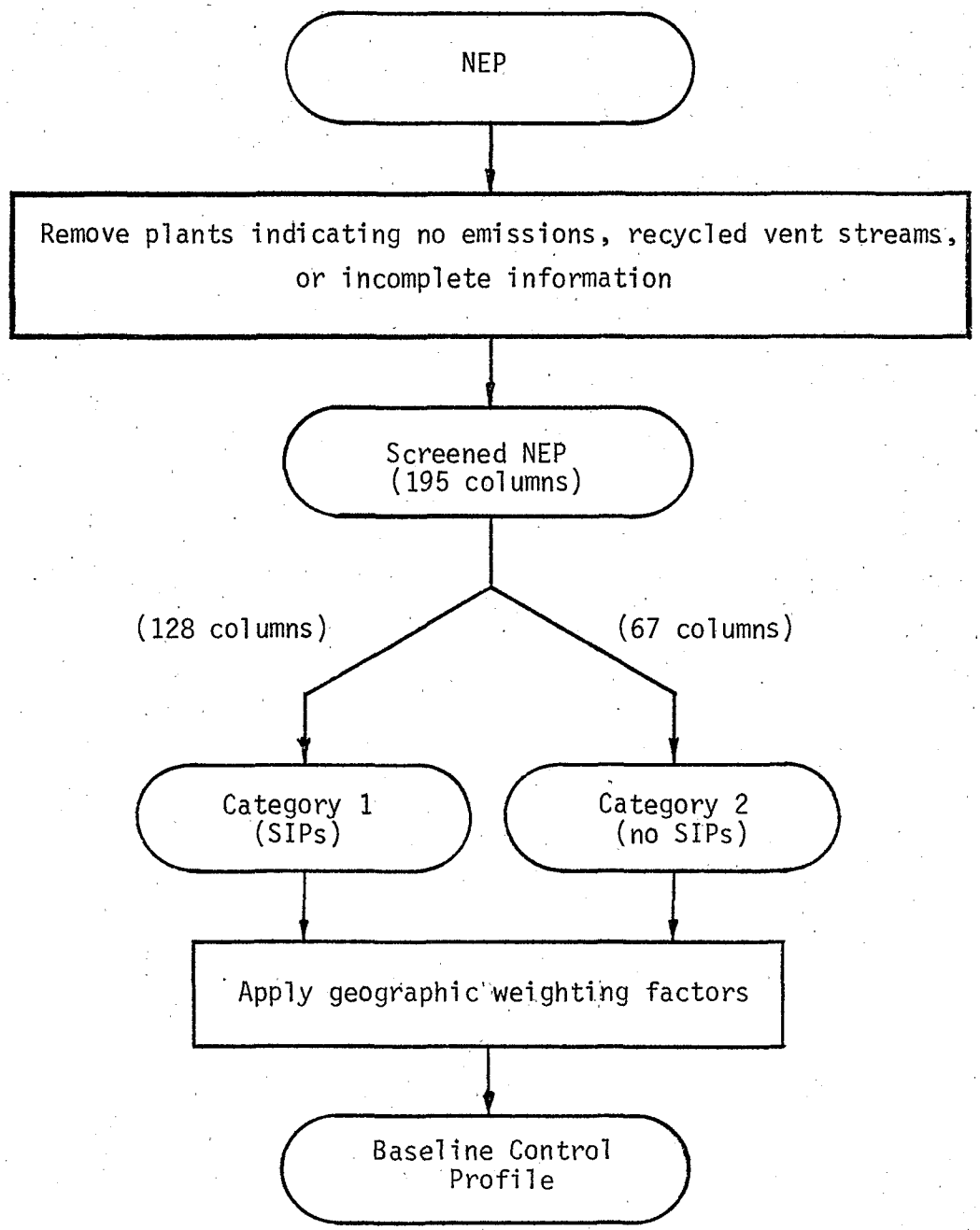


Figure 3-9. Development of the baseline control profile.

## 3.5 REFERENCES


1. U.S. International Trade Commission. Synthetic Organic Chemicals, United States Production and Sales, 1979.

2. Weaver, W.C. Meeting the Olefin Demand: 1980-2000. Chemical Engineering Progress. 76:31-33. December 1980.

3. Word, T.T. Where Will Light Hydrocarbon Feedstocks Fit In The '80s? Chemical Engineering Progress. 76:36-38. December 1980.

4. Ponder, T.C. What's Ahead for NGLs? Hydrogencarbon Processing. 57:147-150. October 1978.

5. Lowenheim, F.A. and M.K. Moran, Faith, Keyes, and Clark's Industrial Chemicals, fourth edition. New York, J. Wiley - Interscience Publication.

6. Reference 1.

7. Reference 2.

8. Reference 5.

9. Reference 1.

10. Letter from Farmer, J.R., EPA:CPB, to Jonnard, A., U.S. International Trade Commission. June 12, 1981. Request for additional list of organic chemicals.

11. Van Winkle, M. Distillation. New York, McGraw-Hill, 1967.

12. Letter from Desai, T., EEA to Beck, D., EPA, August 11, 1980.

13. Reference 11.

14. King, C.J. Separation Processes. New York, McGraw-Hill, 1971.

15. Foust, A.S., et al. Principles of Unit Operations. New York, John Wiley & Sons, 1960.

16. Treybal, R.E. Mass Transfer Operations, 2nd edition. New York, McGraw-Hill, 1968.

17. Houdry Division, Air Products and Chemicals, Inc. Survey Reports on Atmospheric Emissions from the Petrochemical Industry. (Prepared for U.S. Environmental Protection Agency.) Research Triangle Park, N.C. Data on file in Docket No. A-80-25 and at ESED Office. 1972.

18. Trip Reports. Hydroscience, Inc. EPA Contract No. 68-02-2577. (Data in file 2.2.2 at EPA, ESED, CMS, Research Triangle Park, N.C. and in Docket No. A-80-25, Subcategory II-B. 1977 - 1980.

19. Memo and addendum from Desai, T., EEA, to SOCMI Distillation File. January 22, 1982. Development of geographic weighting percentages.

20. Bureau of National Affairs, Inc. Environmental Reporter, State Air Laws, Volume 3, Texas. Washington, D.C., 1982.

21. Bureau of National Affairs, Inc. Environmental Reporter, State Air Laws, Volume 2, Louisiana. Washington, D.C., 1982.

22. Personal Communication. Ivey, L., New Jersey Air Pollution Control Agency, with Flowers, M. Energy & Environmental Analysis. September 11, 1975. 1 p.

23. Bureau of National Affairs, Inc. Environment Reporter, State Air Laws, Volume 2, Illinois. Washington, D.C., 1982.

# 4. EMISSION CONTROL TECHNIQUES

This chapter presents a discussion of the volatile organic compound (VOC) emission control techniques which are applicable to distillation vent streams. The control techniques discussed are grouped into two broad categories which include noncombustion control devices and combustion control devices. Noncombustion control devices are generally product recovery devices while combustion control devices are designed to destroy the VOC in the vent stream prior to atmospheric discharge.

The design and operating efficiencies of the candidate emission control equipment are discussed in this chapter. Basic design considerations for condensers, absorbers, adsorbers, flares, industrial boilers, process heaters, thermal oxidizers and catalytic oxidizers are briefly explained. The conditions affecting the VOC removal efficiency of each type of device are examined in conjunction with evaluation of their applicability for use at distillation units. Emphasis has been given to combustion control devices due to their wide applicability for the control of VOC in distillation vent streams.

## 4.1 NONCOMBUSTION CONTROL DEVICES

The noncombustion control devices discussed in this section include adsorbers, absorbers, and condensers. The following three sections present a process description and identify the VOC removal efficiency and applicability of each device to distillation vent streams.

Noncombustion control devices are generally applied to recover VOC from a vent stream for use as a product or to recycle a compound. The chemical structure of the VOC removed is usually unaltered. Of the 62 plants identified in the screened NEP, 14 apply absorbers to recover VOC, 49 apply condensers, and none apply adsorbers. Although noncombustion control devices are widely applied in industry, they are not universally applicable to all distillation vent streams. The conditions under which these systems are not applicable are identified in the following sections.

## 4.1.1 Adsorption

4.1.1.1 Adsorption process description. Adsorption is a mass-transfer operation involving interaction between gaseous and solid phase components. The gas phase (adsorbate) is captured on the solid phase (adsorbent) surface by physical or chemical adsorption mechanisms. Physical adsorption is a mechanism that takes place when intermolecular (van der Waals) forces attract and hold the gas molecules to the solid surface.[1] Chemisorption occurs when a chemical bond forms between the gas and solid phase molecules. A physically adsorbed molecule can readily be removed from the adsorbent (under suitable temperature and pressure conditions) while the removal of a chemisorbed component is much more difficult.

The most commonly encountered industrial adsorption systems use activated carbon as the adsorbent. Activated carbon is effective in capturing certain organic vapors by the physical adsorption mechanism. In addition, the vapors may be released for recovery by regeneration of the adsorption bed with steam. Oxygenated adsorbents such as silica gels, diatomaceous earth, alumina, or synthetic zeolites exhibit a greater selectivity than activated carbon for capturing some compounds. These adsorbents have a strong preferential affinity for water vapor over organic gases and would be of little use for the high moisture gas streams from some distillation vents.[2]

The design of a carbon adsorption system depends on the chemical characteristics of the VOC being recovered, the physical properties of the offgas stream (temperature, pressure, and volumetric flowrate) and the physical properties of the adsorbent. The mass flow rate of VOC from the gas phase to the surface of the adsorbent (the rate of capture) is directly proportional to the difference in VOC concentration between the gas phase and the solid surface. In addition, the mass flow rate of VOC is dependant on the adsorbent bed volume, the surface area of adsorbent available to capture VOC, and the rate of diffusion of VOC through the gas film at the gas and solid phase interface. Physical adsorption is an exothermic operation which is most efficient within a narrow range of temperature and pressure. A schematic diagram of a typical fixed bed, regenerative carbon

adsorption systems is given in Figure 4-1. The process offgases are filtered and cooled (1) before entering the carbon bed. The inlet gases to an adsorption unit are filtered to prevent bed contamination. The gas is cooled to maintain the bed at optimum operating temperature and to prevent fires or polymerization of the hydrocarbons. Vapors entering the adsorber stage of the system (2) are passed through the porous activated carbon bed.

Adsorption of inlet vapors occurs in the bed until the activated carbon is saturated with hydrocarbons. The dynamics of the process may be illustrated by viewing the carbon bed as a series of layers or mass-transfer zones (3a, b, c). Gases entering the bed are highly adsorbed first in zone (a). Because most of the VOC is adsorbed in zone (a), very little adsorption taking place in zones (b) and (c). Adsorption in zone (b) increases as zone (a) becomes saturated with organics and proceeds through zone (c). When the bed is completely saturated (breakthrough) the incoming VOC laden offgases are routed to an alternate bed while the saturated carbon bed is regenerated.

Regeneration of the carbon bed is accomplished by heating the bed or applying vacuum to draw off the adsorbed gases. Low pressure steam (4) is frequently used as a heat source to strip the adsorbent of organic vapor. The steam laden vapors are then sent to a condenser (5) and on to some type of solvent recovery system (6). The regenerated bed is put back into active service while the saturated bed is purged of organics. The regeneration process may be repeated numerous times but eventually the carbon must be replaced.

4.1.1.2 Adsorption control efficiency. Many modern, well-designed systems achieve 95 percent efficiency for some chemicals.[3] The VOC removal efficiency of an adsorption unit is dependent upon the physical properties of the compounds present in the offgas, the gas stream characteristics, and the physical properties of the adsorbent.

Gas temperature, pressure and velocity are important in determining adsorption unit efficiency. The adsorption rate in the bed decreases sharply when gas temperatures are above 38°C (100°F).[4,5] High temperature increases the kinetic energy of the gas molecules causing them to overcome

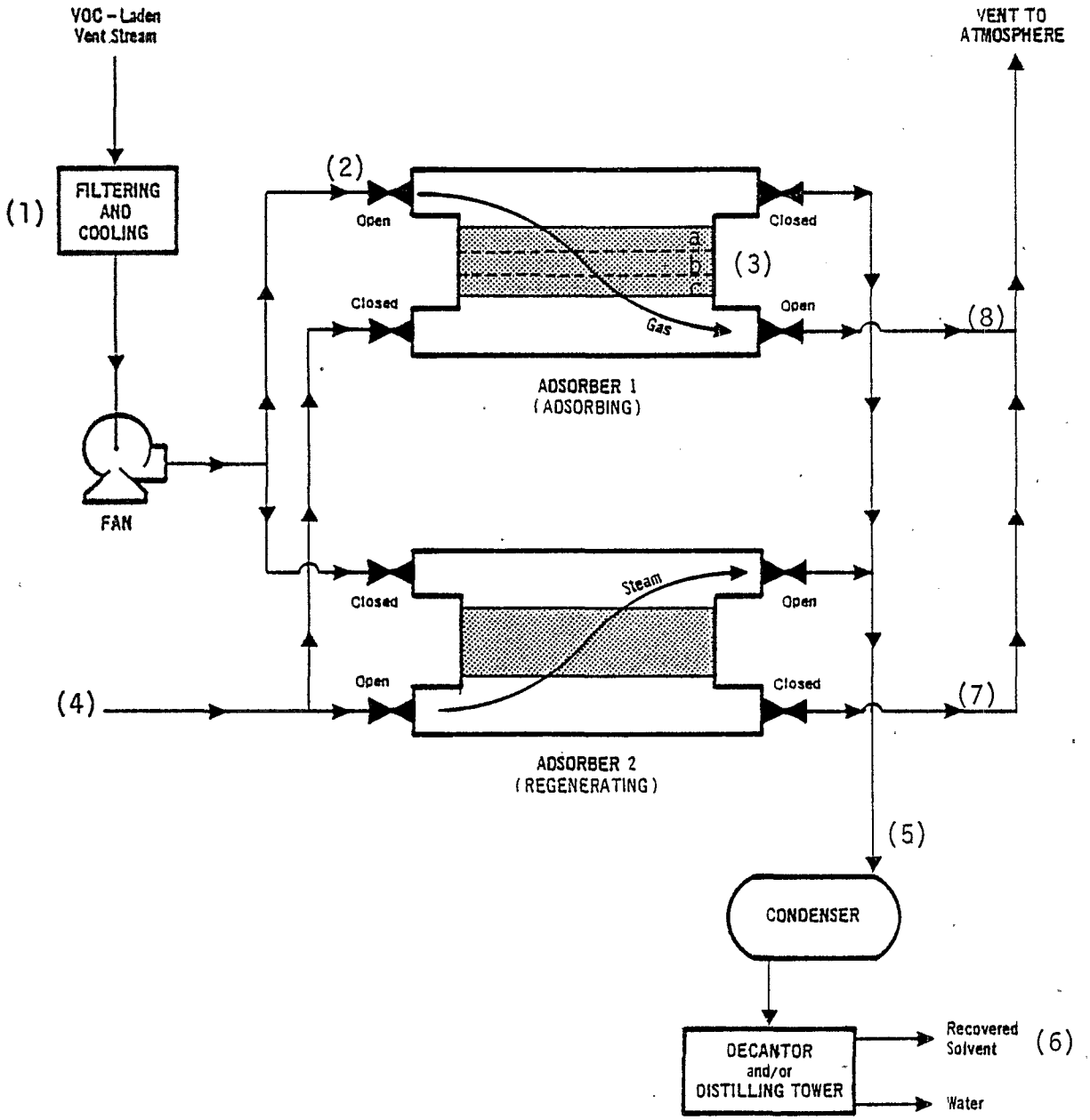


Figure 4-1. Two stage regenerative adsorption system.

van der Waals forces. Under these conditions, the VOC are not retained on the surface of the carbon. Increasing stream pressure generally will improve VOC capture efficiency, however, care must be taken to prevent solvent condensation and possible fire. The gas velocity entering the carbon bed must be quite low to allow time for adsorption to take place. The required depth of the bed for a given compound is directly proportional to the carbon granule size and porosity and to the gas stream velocity (bed depth must increase as the gas velocity increases for a given carbon type).

4.1.1.3 Applicability of adsorption. Although carbon adsorption is an excellent method for recovering some valuable process chemicals, it can not be used as a universal control method for distillation vents. The conditions where carbon adsorption is not recommended are present in many distillation vents. These include streams with high VOC concentrations, very high or low molecular weight compounds and mixtures of high and low boiling point VOC. The range of organic concentration to which carbon adsorption can be applied is from only a few parts per million to concentrations of several percent.[6] Adsorbing distillation vent streams with high organic concentration may result in excessive temperature rise in the carbon bed due to the accumulated heat of adsorption of the VOC loading. However, high organic concentrations can be diluted to make a workable adsorption system. The molecular weight of the compounds to be adsorbed should be in the range of 45 to 130 gm/gm-mole for effective adsorption. Carbon adsorption may not be the most effective application for compounds with low molecular weights (below 45 gm/gm-mole) owing to their smaller attractive forces or for high molecular weight components ( 130 gm/gm-mole) which attach so strongly to the carbon bed that they are not easily removed.[7] Properly operated adsorption systems can be very effective for homogeneous offgas streams but can have problems with a multicomponent system containing a mixture of light and heavy hydrocarbons. The lighter organics tend to be displaced by the heavier (higher boiling) components greatly reducing system efficiency.[8]

4.1.2 Absorption

4.1.2.1 Absorption process description. The mechanism of absorption consists of the selective transfer of one or more components of a gas

mixture into a solvent liquid. The transfer consists of solute diffusion and dissolution into a solvent. For any given solvent, solute, and set of operating conditions, there exists an equilibrium ratio of solute concentration in the gas mixture to solute concentration in the solvent. The driving force for mass transfer at a given point in an operating absorption tower is related to the difference between the actual concentration ratio and the equilibrium ratio.[9] Absorption may only entail the dissolution of the gas component into the solvent or may also involve chemical reaction of the solute with constituents of the solution.[10] The absorbing liquids (solvents) used are chosen for high solute (VOC) solubility and include liquids such as water, mineral oils, nonvolatile hydrocarbon oils, and aqueous solutions of oxidizing agents like sodium carbonate and sodium hydroxide.[11]

Devices based on absorption principles include spray towers, venturi scrubbers, packed columns, and plate columns. Spray towers require high atomization pressure to obtain droplets ranging in size from 500 to 1000 μm in order to present a sufficiently large surface contact area.[12] Although they can remove particulate matter effectively, spray towers have the least effective mass transfer capability and thus, are restricted to particulate removal and control of high-solubility gases such as sulfur dioxide and ammonia.[13] Venturi scrubbers have a high degree of gas-liquid mixing and high particulate removal efficiency but also require high pressure and have relatively short contact times. Therefore, their use is also restricted to high-solubility gases.[14] As a result, VOC control by gas absorption is generally accomplished in packed or plate columns. Packed columns are mostly used for handling corrosive materials, liquids with foaming or plugging tendencies, or where excessive pressure drops would result from use of plate columns. They are less expensive than plate columns for small-scale or pilot plant operations where the column diameter is less than 0.6 m (2 ft). Plate columns are preferred for large-scale operations, where internal cooling is desired or where low liquid flowrates would inadequately wet the packing.[15]

A schematic of a packed tower is shown in Figure 4-2. The gas to be absorbed is introduced at the bottom of the tower (1) and allowed to rise through the packing material (2). Solvent flows from the top of the column, countercurrent to the vapors (3), absorbing the solute from the gas-phase and carrying the dissolved solute out of the tower (4). Cleaned gas exits at the top for release to the atmosphere or for further treatment as necessary. The saturated liquid is generally sent to a stripping unit where the absorbed VOC is recovered. Following the stripping operation the absorbing solution is either recycled back to the absorber or sent to water treatment facility for disposal.

The major tower design parameters to be determined for absorbing any substance are column diameter and height, system pressure drop, and liquid flowrate required. These parameters are derived from considering the total surface area provided by the tower packing material, the solubility and concentrations of the components, and the quantity of gases to be treated.

4.1.2.2 Absorption control efficiency. The VOC removal efficiency of an absorption device is dependent on the solvent selected, and on proper design and operation. For a given solvent and solute, an increase in absorber size or a decrease in the operating temperature can affect the VOC removal efficiency of the system. It may be possible in some cases to increase VOC removal efficiency by a change in the absorbent.

Systems that utilize organic liquids as solvents usually include the stripping and recycle of the solvent to the absorber. In this case the VOC removal efficiency of the absorber is dependent on the solvent stripping efficiency.

4.1.2.3 Applicability of absorption. Although absorption will be attractive for some distillation vents, it cannot be used to control all distillation vents. Since its use is dependent on the economics of recovery, absorption can be better classified as a product recovery device for distillation operations rather than a VOC control device. Absorption is attractive if a significant amount of VOC can be recovered and if the recovered VOC can be reused. It is usually not considered when the VOC concentration is below 200-300 ppmv.[16] Furthermore, the use of absorption

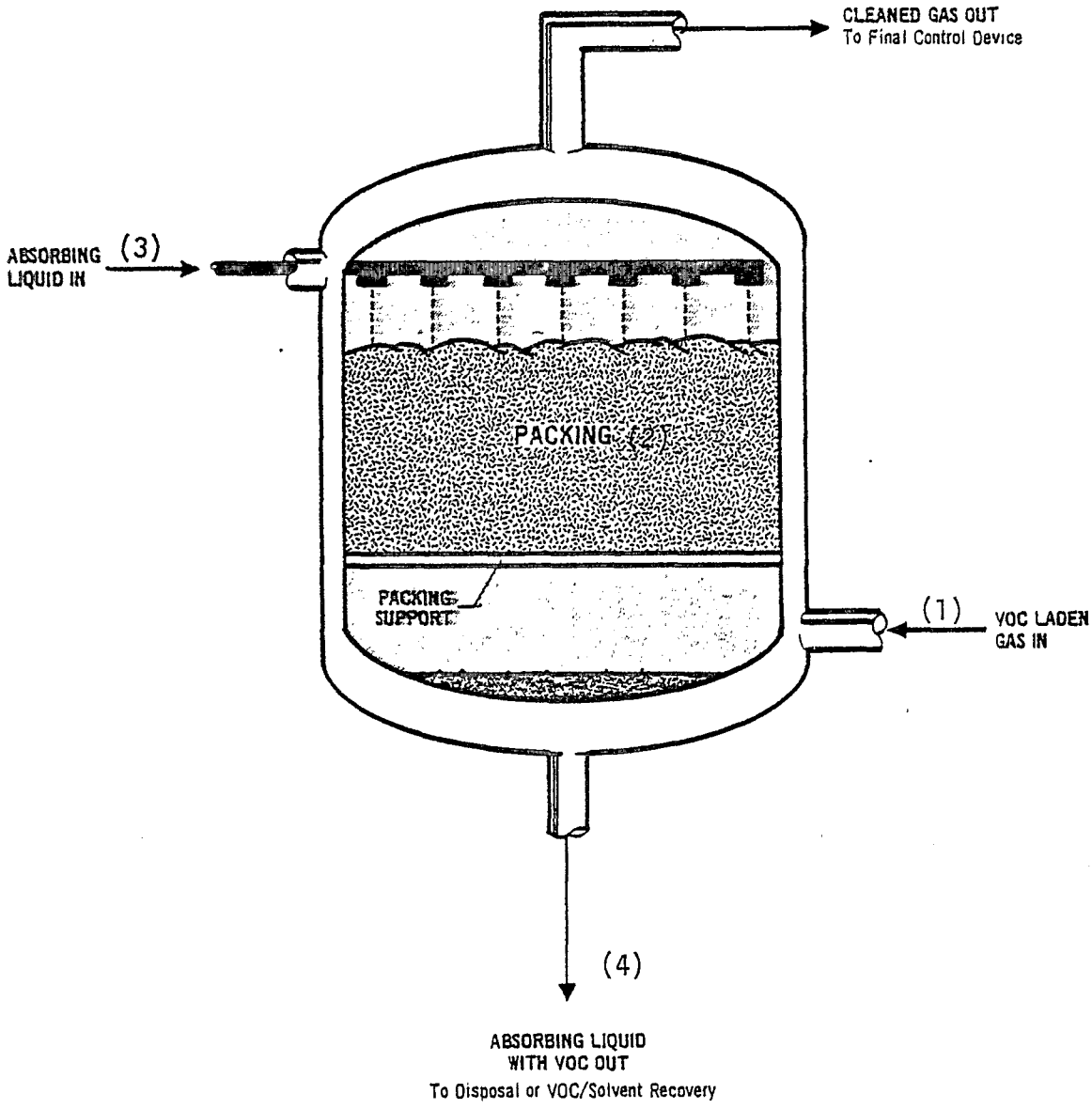


Figure 4-2. Packed tower for gas absorption.

is subject to the availability of an appropriate solvent for a particular VOC.

4.1.3 Condensation

4.1.3.1 Condensation process description. Condensation is a process of converting all or part of the condensable components of a vapor phase into a liquid phase. This is achieved by the transfer of heat from the vapor phase to a cooling medium. If only a part of the vapor phase is condensed, the newly formed liquid phase and the remaining vapor phase will be in equilibrium. In this case, equilibrium relationships at the operating temperatures must be considered. The heat removed from the vapor phase should be sufficient to lower the vapor phase temperature to at or below its dewpoint temperature (temperature at which first drop of liquid is formed).

Condensation devices are of two types: surface condensers and contact condensers.[17] Surface condensers are shell-and-tube type heat exchangers. The coolant and the vapor phases are separated by the tube wall and they never come in direct contact with each other. Surface condensers require more auxiliary equipment for operation but can recover valuable VOC without contamination by the coolant, minimizing waste disposal problems. Only surface condensers are considered in the discussion of control efficiency and applicability since they are used more frequently in industry.

The major equipment components used in a typical surface condenser system for VOC removal are shown in Figure 4-3. This system includes (1) shell and tube dehumidification equipment (2) shell-and-tube heat exchanger (3) refrigeration unit (4) VOC storage tanks and operating pumps. Most surface condensers use a shell-and-tube type heat exchanger to remove heat from the vapor.[18] As the coolant passes through the tubes, the VOC vapors condense outside the tubes and are recovered. The coolant used depends upon the saturation temperature of the VOC stream. Chilled water can be used down to 7°C (45°F), brines to -34°C (-30°F), and chlorofluorocarbons below -34°C (-30°F).[19] Temperatures as low as -62°C (-80°F) may be necessary to condense some VOC streams.[20]

4.1.3.2 Condenser control efficiency. VOC removal efficiency of a condenser is dependent upon the type of vapor stream entering the condenser,

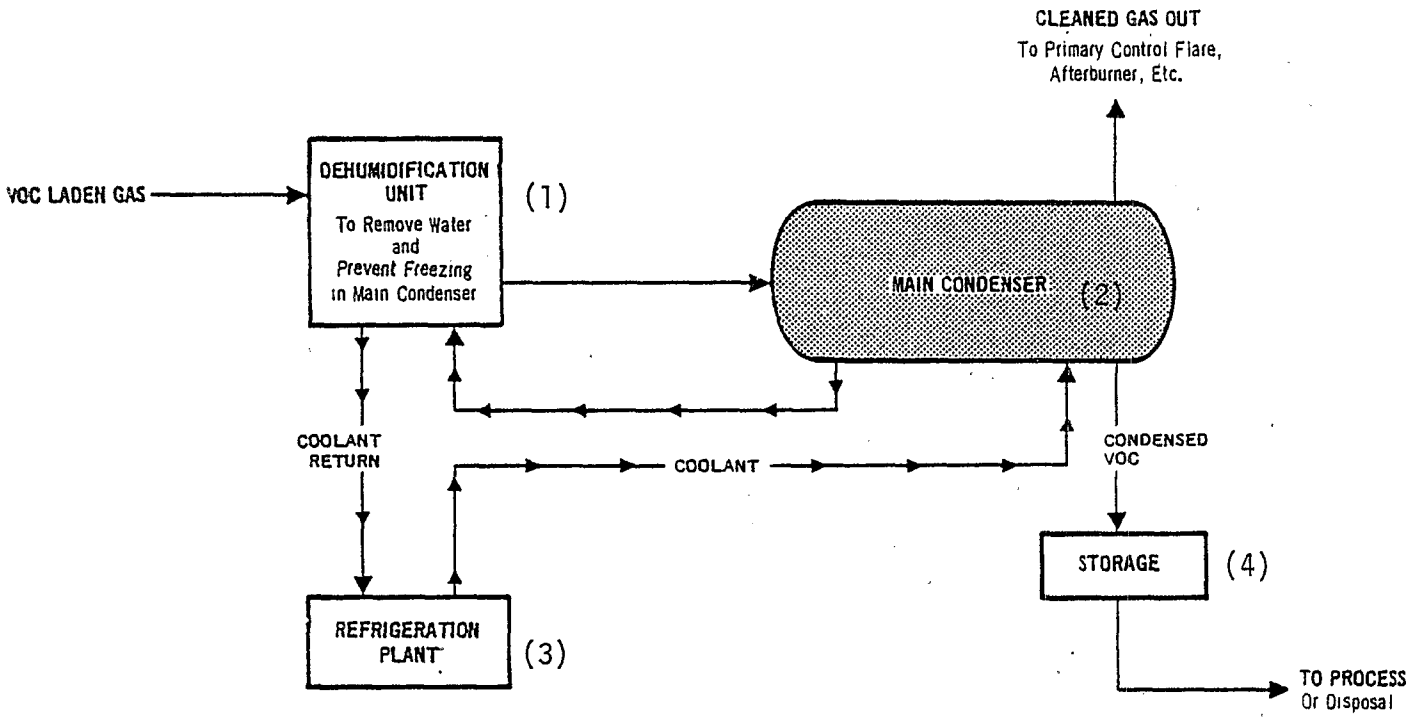


Figure 4-3. Condensation system.

and on condenser operating parameters. Efficiencies of condensers usually vary from 50 to 95 percent.[24]

4.1.3.3 Applicability of condensers. A primary condenser system is usually an integral part of most distillation operations. These condensers are needed to provide reflux in fractionating columns and to recover distilled products. At times additional (secondary) condensers are used to recover more VOC from the vent stream exiting the primary condenser. Condensers are sometimes present as accessories to vacuum generating devices (e.g., barometric condensers).

The use of a secondary condenser to control VOC emissions may not be applicable to some distillation vent streams. Secondary condensers used as supplemental product recovery devices are not well suited for vent streams containing VOC with low boiling points or for vent streams containing large quantities of inerts such carbon dioxide, air, and nitrogen. Low boilers and inerts cannot be condensed at normal operating temperatures and they usually carry over some VOC.

## 4.2 COMBUSTION CONTROL DEVICES

Combustion control devices, unlike noncombustion control devices, alter the chemical structure of the VOC. Combustion is complete if all VOC are converted to carbon dioxide and water. Incomplete combustion results in some of the VOC being totally unaltered or being converted to other organic compounds such as aldehydes or acids.

The combustion control devices discussed in the following four sections include flares, thermal incinerators, catalytic incinerators, and boilers and process heaters. Each device is discussed separately with respect to their operation, destruction efficiency, and applicability to distillation vent streams. Many combustion devices are widely applied where VOC control of distillation vent streams is mandated by current regulations. For example, of the 62 plants identified in the screened NEP 7 use incinerators, 2 use boilers, and 11 use flares to control VOC prior to atmospheric discharge of the vent stream. All of these plants are in states where VOC emissions from distillation operations are regulated.

### 4.2.1 Flares

4.2.1.1 Flare process description. Flaring is an open combustion process in which the oxygen required for combustion is provided by the air around the flame. Good combustion in a flare is governed by flame temperature, residence time of components in the combustion zone, turbulent mixing of the components to complete the oxidation reaction, and oxygen for free radical formation.

There are two types of flares: ground level flares and elevated flares. Kalcevic presents a detailed discussion of different types of flares, flare design and operating considerations, and a method for estimating capital and operating costs for flares.[25] The basic elements of an elevated flare system are shown in Figure 4-4. Process off-gases are sent to the flare through the collection header (1). The off-gases entering the header can vary widely in volumetric flowrate, moisture content, VOC concentration, and heat value. The knock-out drum (2) removes water or hydrocarbon droplets that could create problems in the flare combustion zone. Off-gases are usually passed through a water seal (3) before going to the flare. This prevents possible flame flashbacks, caused when the off-gas flow to the flare is too low and the flame front pulls down into the stack.

Purge gas ($N_2$, $CO_2$, or natural gas) (4) also helps to prevent flashback in the flare stack (5) caused by low off-gas flow. The total volumetric flow to the flame must be carefully controlled to prevent low flow flashback problems and to avoid a detached flame (a space between the stack and flame with incomplete combustion) caused by an excessively high flowrate. A gas barrier (6) or a stack seal is sometimes used just below the flare head to impede the flow of air into the flare gas network.

The VOC stream enters at the base of the flame where it is heated by already burning fuel and pilot burners (7) at the flare tip (8). Fuel flows into the combustion zone where the exterior of the microscopic gas pockets is oxidized. The rate of reaction is limited by the mixing of the fuel and oxygen from the air. If the gas pocket has sufficient oxygen and residence time in the flame zone it can be completely burned. A diffusion flame receives its combustion oxygen by diffusion of air into the flame from the

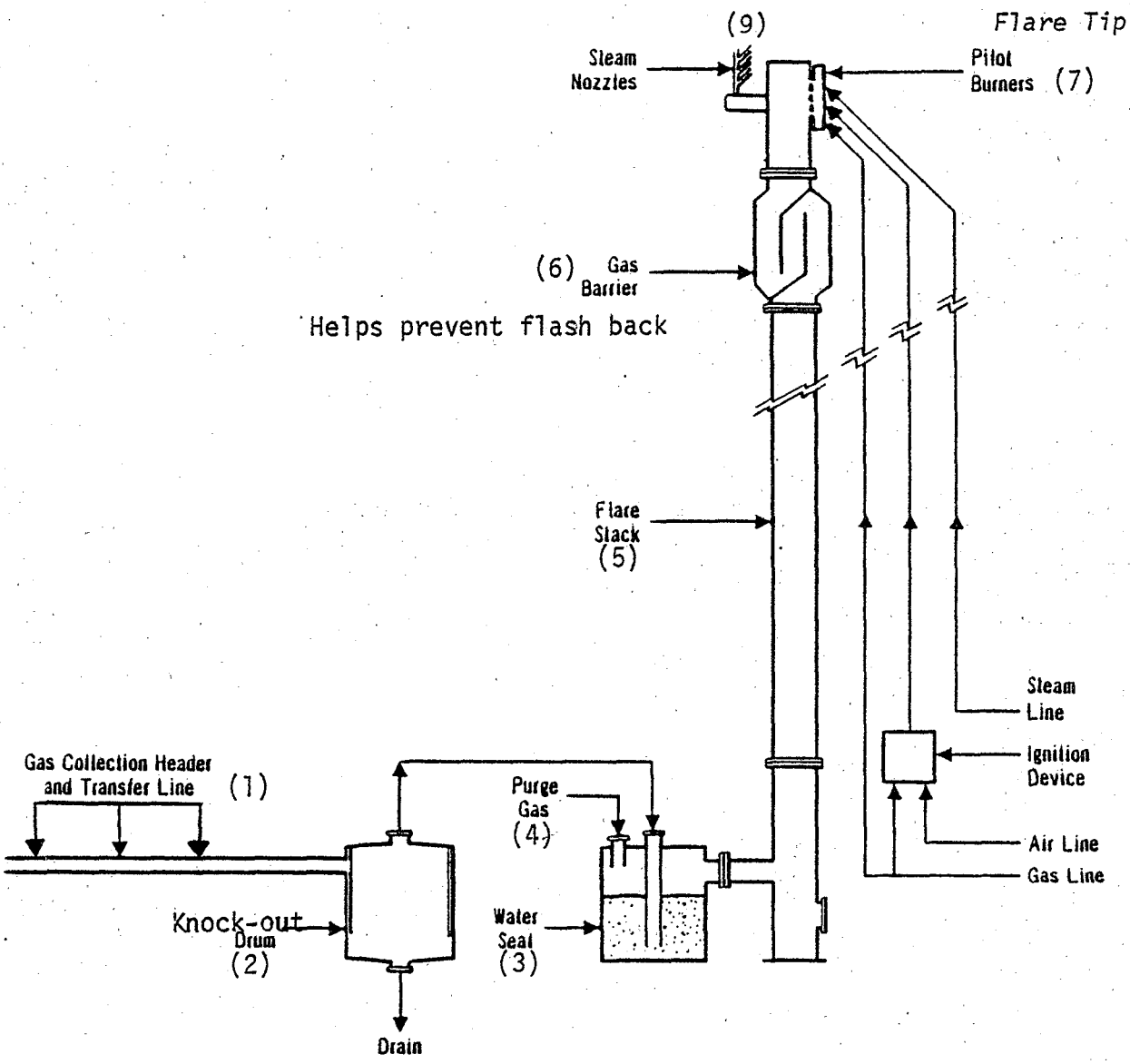


Figure 4-4. Steam assisted elevated flare system.

surrounding atmosphere. The high volume of fuel flow in a flare requires more combustion air at a faster rate than simple gas diffusion can supply so flare designers add steam injection nozzles (9) to increase gas turbulence in the flame boundary zones, drawing in more combustion air and improving combustion efficiency. This steam injection promotes smokeless flare operation by minimizing the cracking reactions that form carbon. Significant disadvantages of steam usage are the increased noise and cost. The steam requirement depends on the composition of the gas flared, the steam velocity from the injection nozzle, and the tip diameter. Although some gases can be flared smokelessly without any steam, typically 0.15 to 0.5 kg of steam per kg of flare gas is required.

Steam injection is usually controlled manually with the operator observing the flare (either directly or on a television monitor) and adding steam as required to maintain smokeless operation. Several flare manufacturers offer devices which sense flare flame characteristics and adjust the steam flowrate automatically to maintain smokeless operation.

Some elevated flares use forced air instead of steam to provide the combustion air and the mixing required for smokeless operation. These flares consist of two coaxial flow channels. The combustible gases flow in the center channel and the combustion air (provided by a fan in the bottom of the flare stack) flows in the annulus. The principal advantage of air assisted flares is that expensive steam is not required. Air assist is rarely used on large flares because air flow is difficult to control when the gas flow is intermittent. About 0.8 hp of blower capacity is required for each 100 lb/hr of gas flared.[26]

Ground flares are usually enclosed and have multiple burner heads that are staged to operate based on the quantity of gas released to the flare. The energy of the gas itself (because of the high nozzle pressure drop) is usually adequate to provide the mixing necessary for smokeless operation and air or steam assist is not required. A fence or other enclosure reduces noise and light from the flare and provides some wind protection.

Ground flares are less numerous and have less capacity than elevated flares. Typically they are used to burn gas "continuously" while steam

assisted elevated flares are used to dispose of large amounts of gas released in emergencies.[27]

4.2.1.2 Flare combustion efficiency.

4.2.1.2.1 Factors affecting flare efficiency. The flammability limits of the gases flared influence ignition stability and flame extinction (gases must be within their flammability limits to burn). When flammability limits are narrow, the interior of the flame may have insufficient air for the mixture to burn. Outside the flame, so much air may be induced that the flame is extinguished. Fuels with wide limits of flammability are therefore usually easier to burn (for instance, $H_2$ and acetylene). However, in spite of wide flammability limits, CO is difficult to burn because it has a low heating value and slow combustion kinetics.

The auto-ignition temperature of a fuel affects combustion because gas mixtures must be at high enough temperature and at the proper mixture strength to burn. A gas with low auto-ignition temperature will ignite and burn more easily than a gas with a high auto-ignition temperature. Hydrogen and acetylene have low auto-ignition temperatures while CO has a high one.

The heating value of the fuel also affects the flame stability, emissions, and flame structure. A lower heating value fuel produces a cooler flame which does not favor combustion kinetics and also is more easily extinguished. The lower flame temperature will also reduce buoyant forces, which reduces mixing (especially for large flares on the verge of smoking). For these reasons, VOC emissions from flares burning gases with low Btu content may be higher than those from flares which burn high Btu gases.

Some fuels also have chemical differences (slow combustion kinetics) sufficient to affect the VOC emissions from flares. For instance, flares burning fuels with large amounts of CO may have greater VOC emissions that flares burning pure VOC.

The density of the gas flared also affects the structure and stability of the flame through the effect on buoyancy and mixing. The velocity in many flares is very low, therefore, most of the flame structure is developed through buoyant forces as a result of the burning gas. Lighter gases

therefore tend to burn better. The density of the fuel also affects the minimum purge gas required to prevent flashback and the design of the burner tip.

Poor mixing at the flare tip or poor flare maintenance can cause smoking (particulate). Fuels with high carbon to hydrogen ratios (greater than 0.35) have a greater tendency to smoke and require better mixing if they are to be burned smokelessly.

4.2.1.2.2 Flare efficiency test data. This section presents a review of the flares and operating conditions used in five studies of flare combustion efficiency. Each study summarized in Table 4-1 can be found in complete form in the docket.

Palmer experimented with a 1/2-inch ID flare head, the tip of which was located 4 feet from the ground. Ethylene was flared at 50 to 250 ft/sec at the exit, ($0.4 \times 10^6$ to $2.1 \times 10^6$ Btu/hr). Helium was added to the ethylene as a tracer at 1 to 3 volume percent and the effect of steam injection was investigated in some experiments. Destruction efficiency (the percent ethylene converted to some other compound) was 97.8 percent.[28]

Siegel made the first comprehensive study of a commercial flare system. He studied burning of refinery gas on a commercial flare head manufactured by Flaregas Company. The flare gases used consisted primarily of hydrogen (45.4 to 69.3 percent by volume) and light paraffins (methane to butane). Traces of $H_2S$ were also present in some runs. The flare was operated from 0.03 to 2.9 megagrams of fuel/hr (287 to 6,393 lb/hr), and the maximum heat release rate was approximately $235 \times 10^6$ Btu/hr. Combustion efficiencies (the percent VOC converted to $CO_2$) averaged over 99 percent.[29]

Lee and Whipple studied a bench-scale propane flare. The flare head was 2 inches in diameter with one 13/16-inch center hole surrounded by two rings of 16 1/8-inch holes, and two rings of 16 3/16-inch holes. This configuration had an open area of 57.1 percent. The velocity through the head was approximately 3 ft/sec and the heating rate was 0.3 M Btu/hr. The effects of steam and crosswind were not investigated in this study. Destruction efficiencies were 99.9 percent or greater.[30]

TABLE 4-1. FLARE EMISSION STUDIES COMPLETED

OCTOBER 1982

| Investigator | Sponsor | Flare Tip Design | References | Flared Gas | Throughput $10^6$ Btu/hr | Flare Efficiency % |
|---|---|---|---|---|---|---|
| Palmer (1972) | E.I. du Pont | 0.5" dia. | 31 | Ethylene | 0.4 - 2.1 | 97.8 - >99 |
| Lee & Whipple (1981) | Union Carbide | Discrete Holes in 2" dia. cap. | 32 | Propane | 0.3 | >99.9 |
| Siegel (1980) | Ph.D. Dissertation University of Karlsruhe | Commercial Design (27.6" dia. steam) | 33 | ≈50% $H_2$ plus light hydrocarbons | 49 - 178 | >99 |
| Howes et al. (1981) | EPA | Commercial Design (6" dia. air assist) | 34 | Propane | 44 | >99 |
| | | Commercial Design H.P. (3 tips @ 4" dia.) | | Natural Gas | 28 (per tip) | >99 |
| McDaniel et al. (1982) | CMA-EPA | Commercial Design (4" dia. steam assist) | 35 | Propylene | 0.01 - 57 | 83 - 99.9 |

SOURCE: Reference 40

Howes, et al. studied two commercial flare heads at John Zink's flare test facility. The primary purpose of this test (which was sponsored by the EPA) was to develop a flare testing procedure. The commercial flare heads were an LH air assisted head and an LRGO (Linear Relief Gas Oxidizer) head manufactured by John Zink Company. The LH flare burned 2,300 lb/hr of commercial propane. The exit gas velocity based on the pipe diameter was 27 ft/sec and the firing rate was $44 \times 10^6$ Btu/hr. The LRGO flare consisted of 3 burner heads located 3 feet apart. The 3 burners combined fired 4,200 lbs/hr of natural gas. This corresponds to a firing rate of $83.7 \times 10^6$ Btu/hr. Steam was not used for either flare, but the LH flare head was in some trials assisted by a forced draft fan. Combustion efficiencies for both flares during normal operation were greater than 99 percent.[36]

An excellent detailed review of all four studies was done by Joseph, et al., in January 1982, and a summary of the studies is given in Table 1. A fifth study[37] determined the influence on flare performance of mixing, Btu content and gas flow velocity. A steam-assisted flare was tested at the John Zink facility using the procedures developed by Howes. The test was sponsored by the Chemical Manufacturers Associated (CMA) with the cooperation and support of the EPA. All of the tests were with an 80 percent propylene, 20 percent propane mixture diluted as required with nitrogen to give different Btu/scf values. This was the first work which determined flare efficiencies at a variety of "nonideal" conditions where lower efficiencies had been predicted. All previous tests were of flares which burned gases which were very easily combustible and did not tend to soot. This was also the first test which used the sampling and chemical analysis methods developed for the EPA by Howes.

The steam assisted flare was tested with exit flow velocities ranging from 0.02 to 60 ft/sec, with Btu contents from 200 to 2,183 Btu/scf and with steam to gas (weight) ratios varying from 0 (no steam) to 6.8611. Steam-assisted flares were tested with fuel gas heat contents as low as 300 Btu/scf. Flares without assist were tested down to 200 Btu/scf. All of these tests, except for those with very high steam to gas ratios, showed

combustion efficiencies of over 98 percent. Flares with high steam to gas ratios (about 10 times more steam than that required for smokeless operation) had lower efficiencies (69 to 82 percent) when combusting 2,183 Btu/scf of gas.

After consideration of the results of these five tests, the EPA has concluded that 98 percent combustion efficiency can be achieved by steam-assisted flares with exit flow velocities less than 60 ft/sec and combustion gases with heat contents over 300 Btu/scf and by flares operated without assist with exit flow velocities less than 60 ft/sec and burning gases with heat contents over 200 Btu/scf. Flares are not normally operated at the very high steam to gas ratios that resulted in low efficiency in some tests because steam is expensive and operators make every effort to keep steam consumption low. Flares with high steam rates are also noisy and may be a neighborhood nuisance.

The EPA has a program under way to determine more exactly the efficiencies of flares used in the petroleum/SOCMI industry and a flare test facility has been constructed. The combustion efficiency of four flares (1 1/2 inches to 12 inches ID) will be determined and the effect on efficiency of flare operating parameters, weather factors, and fuel composition will be established. The efficiency of larger flares will be estimated by scaling.

4.2.1.3 Applicability of flares. About 75 percent of the organic chemical plants are estimated to have a flare.[38] Flares are usually designed to control the normal operating vents or emergency upsets which require release of large volumes of gases. Often, large diameter flares designed to handle emergency releases are used to control low volume continuous vent streams from distillation operations. In refineries usually all process vents (including distillation vents) are combined in a common gas line which supplies fuel to boilers and process heaters. However, excess gases and fluctuations in flow in the gas line are sent to a flare.

The flare is a useful emission control device. It can be used for almost any VOC stream, and can handle fluctuations in VOC concentration, flowrate, and inerts content very easily. Some streams cannot be flared

such as those containing high concentrations of halogen or sulfur compounds due to corrosion of the flare tip or secondary pollution such as $SO_2$.

4.2.2 Thermal Incineration

4.2.2.1 Thermal incineration process description. Any organic chemical heated to a high enough temperature in the presence of enough oxygen will be oxidized to carbon dioxide and water. This is the basic principle of operation of a thermal incinerator. The theoretical temperature required for thermal oxidation to occur depends on the structure of the chemical involved. Some chemicals are oxidized at temperatures much lower than others. All practical thermal incineration processes are influenced by time, mixing, and temperature. An efficient thermal incinerator system must provide:

1. A chamber temperature high enough to enable the oxidation reaction to proceed rapidly to completion,
2. Enough turbulence to obtain good mixing between the hot combustion products from the burner, combustion air, and VOC, and
3. Sufficient residence time at the chosen temperature for the oxidation reaction to reach completion.

A thermal incinerator is usually a refractory-lined chamber containing a burner at one end. As shown in Figure 4-5, discrete dual fuel burners (1) and inlets for the offgas (2) and combustion air (3) are arranged in a premixing chamber (4) to thoroughly mix the hot products from the burners with the offgas air streams. The mixture of hot reacting gases then passes into the main combustion chamber (5). This section is sized to allow the mixture enough time at the elevated temperature for the oxidation reaction to reach completion (residence times of 0.3 to one second are common). Energy can then be recovered from the hot flue gases in a heat recovery section (6). Preheating of combustion air or offgas is a common mode of energy recovery; however, it is sometimes more economical to generate steam. Insurance regulations require that if the waste stream is preheated, the VOC concentration must be maintained below 25 percent of the lower explosive limit (LEL) to prevent explosion hazards.

Thermal incinerators designed specifically for VOC incineration with natural gas as the auxiliary fuel may also use a grid-type (distributed) gas burner as shown in Figure 4-6.[39] The tiny gas flame jets (1) on the grid surface (2) ignite the vapors as they pass through the grid. The grid acts as a baffle for mixing the gases entering the chamber (3). This arrangement ensures burning of all vapors at lower chamber temperature and uses less fuel. This system makes possible a shorter reaction chamber yet maintains high efficiency.

Other parameters affecting incinerator performance are the offgas heating value, the water content in the stream and the amount of excess combustion air (the amount of air above the stoichiometric air needed for reaction). The offgas heating value is a measure of the heat available from the combustion of the VOC in the offgas. Combustion of offgas with a heating value less than 1.86 $MJ/Nm^3$ (50 Btu/scf) usually requires burning auxiliary fuel to maintain the desired combustion temperature. Auxiliary fuel requirements can be lessened or eliminated by the use of recuperative heat exchangers to preheat combustion air. Offgas with a heating value above 1.86 $MJ/Nm^3$ (50 Btu/scf) may support combustion but may need auxiliary fuel for flame stability.

A thermal incinerator handling offgas streams with varying heating values and moisture content requires careful adjustment to maintain the proper chamber temperatures and operating efficiency. Water requires a great deal of heat to vaporize, so entrained water droplets in an offgas stream can substantially increase auxiliary fuel requirements owing to the additional energy needed to vaporize the water and raise it to the combustion chamber temperature. Combustion devices are always operated with some quantity of excess air to ensure a sufficient supply of oxygen. The amount of excess air used varies with the fuel and burner type but should be kept as low as possible. Using too much excess air wastes fuel because the additional air must be heated to the combustion chamber temperature. Large amounts of excess air also increases flue gas volume and may increase the size and cost of the system. Packaged, single unit thermal incinerators can be built to control streams with flowrates in the range of 0.1 $Nm^3/sec$ (200 hundred scfm) to about 24 $Nm^3/sec$ (50,000 scfm).

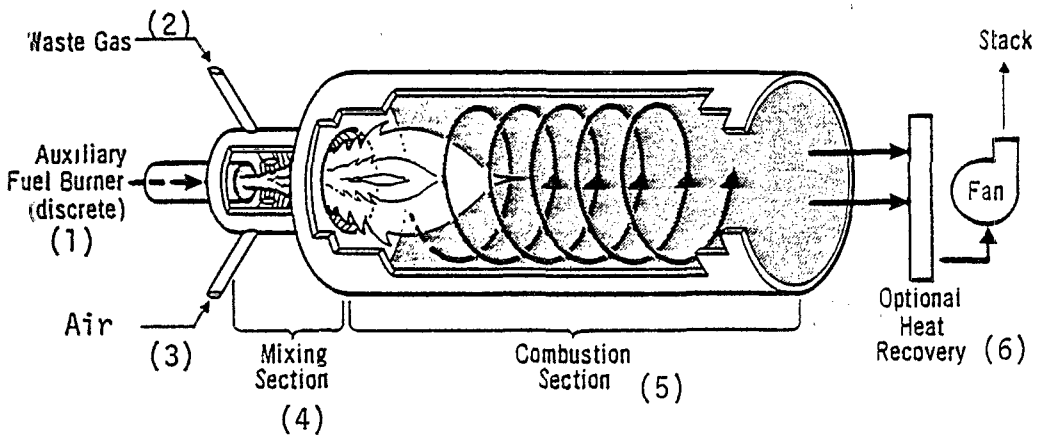


Figure 4-5. Discrete burner, thermal oxidizer.

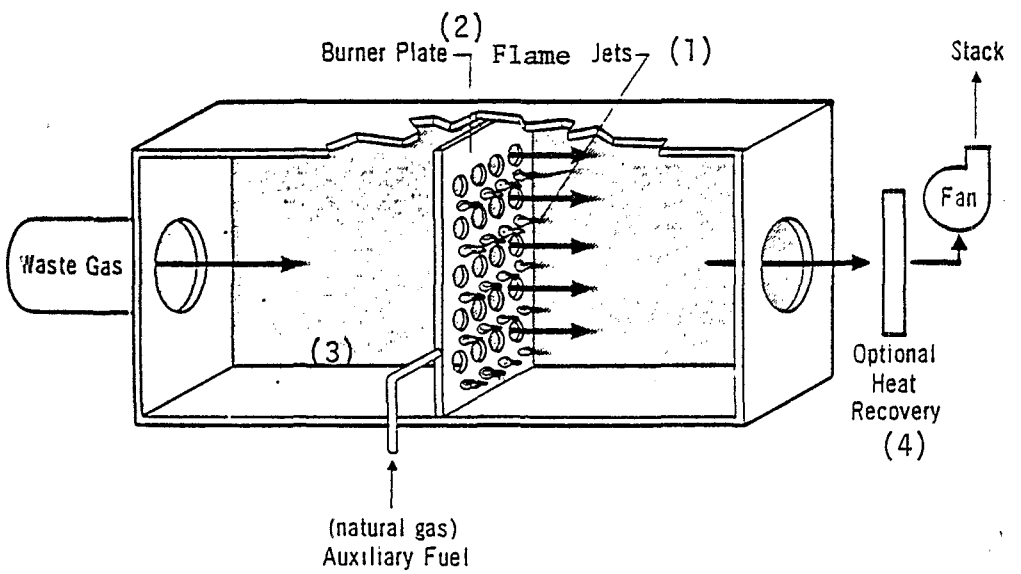


Figure 4-6. Distributed burner, thermal oxidizer.

Thermal oxidizers for halogenated VOC control require additional control equipment to remove the corrosive combustion products. The flue gases are quenched to lower their temperature and routed through absorption equipment such as towers or liquid jet scrubbers to remove the corrosive gases.

4.2.2.2 Thermal incinerator removal efficiency. The VOC destruction efficiency of a thermal oxidizer can be affected by variations in chamber temperature, residence time, inlet VOC concentration, compound type, and flow regime (mixing). Test results show that thermal oxidizers can achieve 98 percent destruction efficiency for most VOC compounds at combustion chamber temperatures ranging from 700 to 1300°C (1300 to 2370°F) and residence times of 0.5 to 1.5 seconds.[40] These data indicate that significant variations in destruction efficiency occurred for $C_1$ to $C_5$ alkanes and olefins, aromatics (benzene, toluene and xylene), oxygenated compounds (methylethylketone and isopropanol), chlorinated organics (vinyl chloride) and nitrogen containing species (acrylonitrile and ethylamines) at chamber temperatures below 760°C (1400°F). This information used in conjunction with kinetics calculations indicates the combustion chamber parameters for at least a 98 percent VOC destruction efficiency are a combustion temperature of 870°C (1600°F) and a residence time of 0.75 seconds (based upon residence in the chamber volume at combustion temperature). A thermal oxidizer designed to produce these conditions in the combustion chamber should be capable of high destruction efficiency for almost any VOC even at low inlet concentrations.

At temperatures over 760°C (1400°F), the oxidation reaction rates are much faster than the rate of gas diffusion mixing. The destruction efficiency of the VOC then becomes dependent upon the fluid mechanics within the oxidation chamber. The flow regime must assure rapid, thorough mixing of the VOC stream, combustion air, and hot combustion products from the burner. This enables the VOC to attain the combustion temperature in the presence of enough oxygen for a sufficient time period for the oxidation reaction to reach completion.

Based upon the studies of thermal oxidizer efficiency, auxiliary fuel use, and costs it has been concluded that 98 percent VOC destruction or a 20 ppmv compound exit concentration (whichever is less stringent) is the highest reasonable control level achievable by all new incinerators in all distillation processes, considering current technology.[41] Because of much slower combustion reaction rates at lower inlet VOC concentrations, maximum achievable VOC destruction efficiency decreases as inlet concentration decreases. Therefore, a VOC weight percentage reduction based on the mass rate of VOC exiting the control device versus the mass rate of VOC entering the device, would be appropriate for vent streams with VOC concentrations above approximately 2000 ppm (corresponding to 1000 ppm VOC in the incinerator inlet stream since air dilution is typically 1:1). For vent streams with VOC concentration below approximately 2000 ppm, it has been determined that an incinerator outlet concentration of 20 ppm (volume, by compound), or lower, is achievable by all new thermal oxidizers.[41] The 98 percent efficiency estimate is predicated upon thermal incinerators operated at 870°C (1600°F) with 0.75 seconds residence time. Study results show that this yields conservative estimates of costs and energy use for these type units.

4.2.2.3 Applicability of thermal incinerators. In terms of technical feasibility, thermal incinerators are applicable as a control device for many distillation vents. They can be used for VOC streams with any concentration and with any type of VOC. They can be designed to handle minor fluctuations in flows. However, excessive fluctuations in flow (upsets) might not allow the use of incinerators and would require the use of a flare. Presence of compounds such as halogens or sulfur might require some additional equipment such as scrubbers.

Thermal incinerators are usually capital intensive, but with efficient recovery of energy from the flue gases they can be made economical.

4.2.3 Industrial Boiler and Process Heater Combustion Control Devices

Industrial boilers and process heaters can be designed to control VOC by incorporating the distillation vent stream with the inlet fuel or by feeding the stream into the boiler or heater through a separate burner. The

following is a process description and discussion of the applicability and efficiency of applying industrial boilers or process heaters to control VOC from distillation vent streams. The process description for an industrial boiler and a process heater are presented separately in the following two sections. These process descriptions are focused on those aspects of each process that relate to the use of these combustion devices as a VOC control method.

4.2.3.1 Industrial boiler process description. Surveys of industrial boilers show that the majority of industrial boilers used in the chemical industry are of watertube design. Furthermore, over half of these boilers use natural gas as a fuel.[42] In a watertube boiler, hot combustion gases contact the outside of heat transfer tubes which contain hot water and steam. These tubes are interconnected by a set of drums which collect and store the heated water and steam. The water tubes are of relatively small diameter, 5 cm (2.0 inch), providing rapid heat transfer, rapid response to steam demands and relatively high thermal efficiency.[43] Energy transfer from the hot flue gases to water in the furnace water tube and drum system can be above 85 percent efficient. Additional energy can be recovered from the flue gas by preheating combustion air in an air preheater or by preheating incoming boiler feedwater in an economizer unit.

When firing natural gas, forced or natural draft burners are used to mix thoroughly the incoming fuel and combustion air. If a distillation vent stream is combusted in a boiler, it can be mixed with the incoming fuel or fed to the burnace through a separate burner. In general, burner design depends on the characteristics of the fuel mix (when the vent stream and fuel are combined) or of the vent stream alone (when a separate burner is used). A particular burner design commonly known as a high intensity or vortex burner can be effective for vent streams with low heating values (i.e., streams where a conventional burner may not be applicable). Effective combustion of low heating valve streams is accomplished in a high intensity burner by passing the combustion air through a series of spin vanes to generate a strong vortex.

Furnace residence time and temperature profiles vary for industrial boilers depending on the furnace and burner configuration, fuel type, heat input, and excess air level.[44] A mathematical model has been developed which estimates the furnace residence time and temperature profiles for a variety of industrial boilers.[45] This model predicts mean furnace residence times of from 0.25 to 0.83 seconds for natural gas-fired water tube boilers in the size range from 4.4 to 44 MW (15 to 150 x $10^6$ Btu/hr). Furnace exit temperatures for this range of boiler sizes are at or above 1475K (2200°F) with peak furnace temperatures occurring in excess of 1815K (2810°F). Residence times for oil-fired boilers are similar to the natural gas-fired boilers described here.

4.2.3.2 Process heater description. A process heater is similar to an industrial boiler in that heat liberated by the combustion of fuels is transferred by radiation and convection to fluids contained in tubular coils. Process heaters are used in chemical manufacturing to drive endothermic reactions such as natural gas reforming and thermal cracking. They are also used as feed preheaters for other reactors and as reboilers for some distillation operations. The fuels used in process heaters include natural gas, refinery offgases, and various grades of fuel oil. Gaseous fuels account for about 90 percent of the energy consumed by process heaters.[46]

There are many variations in the design of process heaters depending on the application considered. In general, the radiant section consists of the burner(s), the firebox, and a row of tubular coils containing the process fluid. Most heaters also contain a convective section in which heat is recovered from hot combustion gases by convective heat transfer to the process fluid.

Process heater applications in the chemical industry can be broadly classified with respect to firebox temperature: (1) low firebox temperature applications such as feed preheaters and reboilers, (2) medium firebox temperature applications such as steam superheaters, and (3) high firebox temperature applications such as pyrolysis furnaces and steam-hydrocarbon reformers. Firebox temperatures within the chemical industry can be

expected to range from about 750°F for preheaters and reboilers to 2300°F for pyrolysis furnaces.

4.2.3.3 Control efficiency. A boiler or process heater furnace can be compared to an incinerator where the average furnace temperature and residence time determines the combustion efficiency. However, when a vent gas is injected as a fuel into the flame zone of a boiler or process heater, the required residence time is reduced due to the relatively high flame zone temperature. The following test data, which document the destruction efficiencies for industrial boilers and process heaters, are based on injecting the wastes identified into the flame zone of each combustion control device.

An EPA sponsored test was conducted in an effort to determine the destruction efficiency of an industrial boiler for polychlorinated biphenyls (PCB's).[47] The results of this test indicated that the PCB destruction efficiency of an oil-fired industrial boiler firing PCB-spiked oil was greater than 99.9 percent. This efficiency was determined based on the PCB content measured by a gas chromatagraph in the fuel feed and flue gas.

As discussed in previous sections firebox temperatures for process heaters show relatively wide variations depending on the application (see Section 4.2.3.2). Tests were conducted by EPA to determine the benzene destruction efficiency of five process heaters firing a benzene offgas and natural gas mixture.[48,49,50] The units tested are representative of process heaters with low temperature fireboxes (reboilers) and medium temperature fireboxes (superheaters). Sampling problems occurred while testing one of these heaters and as a result, the data for that test may not be reliable and are not presented.[51] The reboiler and superheater units tested showed greater than a 98 percent overall destruction efficiency for $C_1$ to $C_6$ hydrocarbons.[52] Additional tests conducted on a second superheater and a hot oil heater showed that greater than 99 percent overall destruction of $C_1$ to $C_6$ hydrocarbons occurred for both units.[53] These efficiencies were determined based on the benzene content measured by a gas chromatagraph in the fuel feed and flue gas.

4.2.3.4 Applicability of industrial boilers and process heaters as control devices. Industrial boilers and process heaters are currently used by industry to combust off gases from distillation and refinery operations. These devices are most applicable where high vent stream heat recovery potential exists.

The primary purpose of a boiler is to generate steam. Process heaters are applied within a plant for a variety of reasons including natural gas reforming, thermal cracking, process feedstock preheating, and reboiling for some distillation operations. Both devices are essential to the operation of a plant and as a result, only streams which are certain not to reduce the device's performance or reliability warrant use of a boiler or process heater as a combustion control device. Variations in vent stream flowrate and/or heating value could affect the heat output or flame stability of a boiler or process heater and should be considered when using these combustion devices. Performance or reliability may be affected by the presence of corrosive products in the vent stream. Since these compounds could corrode boiler or process heater materials, vent streams with a relatively high concentration of halogenated or sulfur containing compounds are usually not combusted in boilers or process heaters. When corrosive VOC compounds are combusted, the flue gas temperature must be maintained above the acid dew point to prevent acid deposition and subsequent corrosion from occurring.

The introduction of a distillation vent stream into the furnace of a boiler or heater could alter the heat transfer characteristics of the furnace. Heat transfer characteristics are dependent on the flowrate, heating value, and elemental composition of the distillation vent stream, and the size and type of heat generating unit being used. Often, there is no significant alteration of the heat transfer, and the organic content of the distillation steam can in some cases lead to a reduction in the amount of fuel required to achieve the desired heat production. In other cases, the change in heat transfer characteristics after introduction of the distillation stream may adversely affect the performance of the heat

generating unit, and increase fuel requirements. If for a given distillation vent stream, increased fuel is required to achieve design heat production to the degree that equipment damage (for example, tube failure due to local hot spots) might result, then heat generating units would not be applicable as a VOC control device for that vent streams. In addition to these reliability problems, there are also potential safety problems associated with ducting distillation vents to a boiler or process heater. Variation in the flowrate and organic content of the vent stream could, in some cases, lead to explosive mixtures which could cause extensive damage. Another related problem is flame fluttering which could result from these variations.

When a boiler or process heater is applicable and available, they are excellent control devices since they can provide at least 98 percent destruction of VOC. In addition, near complete recovery of the vent stream heat content is possible. However, both devices must operate continuously and concurrently with the pollution source unless an alternate control strategy is available in the event the heat generating capacity of either unit is not required.

4.2.4 Catalytic Oxidation

4.2.4.1 Catalytic oxidation process description. Catalytic oxidation is the fourth major combustion technique examined for VOC emission control. A catalyst increases the rate of chemical reaction without becoming permanently altered itself. Catalysts for catalytic oxidation cause the oxidizing reaction to proceed at a lower temperature than required for thermal oxidation. These units can also operate well at VOC concentrations below the lower explosive limit which is a distinct advantage for some offgas streams. Combustion catalysts include platinum and platinum alloys, copper oxide, chromium and cobalt.[54] These are deposited in thin layers on inert substrates to provide for maximum surface area between the catalyst and the VOC stream.

A schematic of a catalytic oxidation unit is shown in Figure 4-7. The waste gas (1) is introduced into a mixing chamber (3) where it is heated to about 316°C (600°F) by contact with the hot combustion products of a

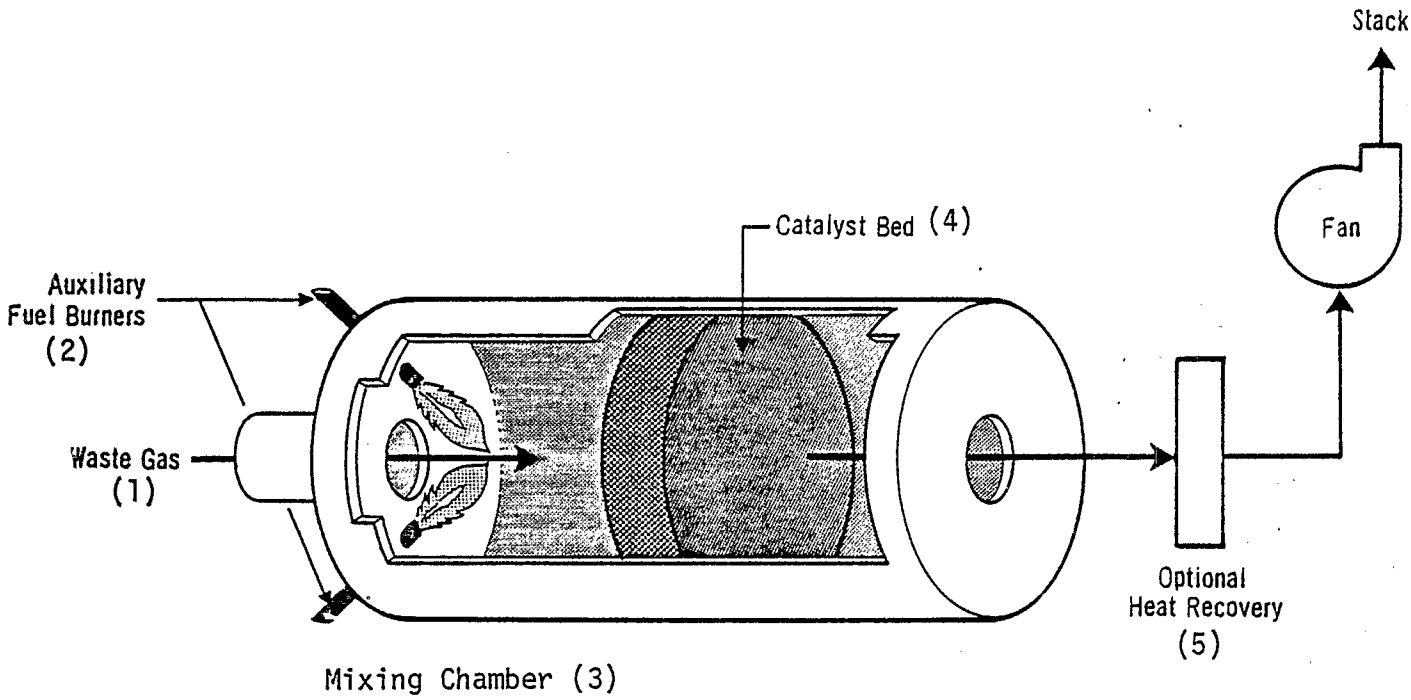


Figure 4-7. Catalytic oxidizer.

burner (2). The heated mixture is then passed through the catalyst bed (4). Oxygen and VOC migrate to the catalyst surface by gas diffusion and are adsorbed in the pores of the catalyst. The oxidation reaction takes place at these active sites. Reaction products are desorbed from the active sites and transferred by diffusion back into the waste gas.[55] The cleaned gas may then be passed through a waste heat recovery device (5) before exhausting into the atmosphere.

The operating temperature range of combustion catalysts is usually from 316°C (600°F) to 650°C (1200°F). Lower temperatures may result in slowing down and possibly stopping the oxidation reaction. Higher temperatures may result in shortened catalyst life and possibly evaporation of the catalyst from the support substrate. Any accumulation of particulate matter, condensed VOC, or polymerized hydrocarbons on the catalyst can block the active sites and reduce effectiveness. Catalysts can also be deactivated by compounds containing sulphur, bismuth, phosphorous, arsenic, antimony, mercury, lead, zinc, or tin, or halogens.[56] If these compounds exist in the catalytic unit, VOC will pass through unreacted or be partially oxidized to form aldehydes, ketones and organic acids. These compounds are highly reactive atmospheric pollutants and can corrode plant equipment.

4.2.4.2 Catalytic oxidizer control efficiency. Catalytic oxidizer destruction efficiency is dependent on the space velocity, (the catalyst volume required per unit volume gas processed per hour), operating temperature, and waste gas VOC composition and concentration. A catalytic unit operating at about 450°C (840°F) with a catalyst bed volume of 0.014 to 0.057 $m^3$ (0.5 to 2 $ft^3$) per 0.47 $Nm^3/s$ (1000 scfm) of offgas passing through the device can achieve 95 percent VOC destruction efficiency.[57] Some catalytic units have been reported to achieve 97.9 to 98.5 percent destruction efficiencies.[58] These higher efficiencies are usually obtained by increasing the catalyst bed volume to offgas flow ratio. The cost of this increased catalyst bed can be prohibitive.

4.2.4.3 Applicability of catalytic oxidizers. The sensitivity of catalytic oxidizer to VOC inlet stream flow conditions, their inability to handle high VOC concentration offgas streams, and their higher cost for

destruction efficiencies comparable to thermal oxidizers limit the application of catalytic units for control of VOC from distillation operations.

## 4.3 SUMMARY

The two general classifications of VOC control techniques discussed in the preceding sections include noncombustion and combustion control devices. This section summarizes the major points regarding control device applicability and performance.

The noncombustion control devices discussed include adsorbers, absorbers and condensers. Noncombustion control devices may be attractive if a significant amount of usable VOC can be recovered, but they may not be applicable to some distillation vent streams. For example, adsorbers may not always be applicable to vent streams with high VOC concentrations or to vent streams containing low molecular weight compounds. Absorbers are generally not applied to streams with VOC concentrations below 200 to 300 ppmv, while condensers are not well suited for application to vent streams containing low boiling point VOC or to vent streams with large inert concentrations. Even though these restrictions exist, information in the NEP shows that many condensers and absorbers are applied to distillation vent streams in the synthetic organic chemical manufacturing industry. Control efficiencies for the noncombustion devices considered vary from 50 to 95 percent for condensers and up to 95 percent for adsorbers.

The combustion control devices considered include flares, industrial boilers, process heaters, thermal incinerators, and catalytic incinerators.[59] In general, these devices are applicable to a wide variety of vent stream characteristics and all can achieve at least 98 percent destruction efficiency. Combustion devices are capable of adapting to moderate changes in effluent flowrate and concentration while control efficiency is not affected by the type of VOC present. This is generally not the case with noncombustion control devices. In general, combustion control devices are both capital and energy intensive except where boilers or process heaters are applied and the energy content of the vent stream is recovered. However, because these devices are essential to the operation of a chemical plant, only streams that are certain not to reduce boiler or

process heater performance and reliability warrant use of these systems. Application of a scrubber prior to atmospheric discharge may be required when vent streams containing high concentrations of halogenated or sulfonated compounds are combusted in an enclosed combustion device. In addition, vent streams with high concentrations of corrosive halogenated or sulfonated compounds may preclude the use of flares because of possible flare tip corrosion and may preclude the use of boilers and process heaters because of potential internal (boiler) corrosion.

There are some disadvantages associated with VOC control by combustion: (1) high capital and operating costs result from thermal oxidation techniques, which could require a plot of land as large as 300 ft by 300 ft for installation; (2) since offgas must be collected and ducted to the combustion device long duct runs may lead to condensation of combustibles and possibly to duct fires; and (3) since thermal oxidizers utilize combustion with a flame for achieving VOC destruction, the unit must be located at a safe distance from process equipment in which flammable chemicals are used. Alternatively, special designs may be employed to minimize the risk of explosion or fire.

## 4.4 REFERENCES


1. U.S. Environmental Protection Agency. Office of Air and Waste Management. Control Techniques for Volatile Organic Emissions from Stationary Sources. Research Triangle Park, N.C. Publication No. EPA-450/2-78-022. May 1978. p. 53.

2. Stern, A.C. Air Pollution, Volume IV, 3rd Edition, New York, Academic Press, 1977. p. 336.

3. Reference 2, p. 355.

4. Reference 2, p. 356.

5. Basdekis, H.S. (Hydroscience.) Emissions Control Options for the Synthetic Organic Chemical Industry. Control Device Evaluation. Carbon Adsorption. (Prepared for U.S. Environmental Protection Agency.) Research Triangle Park, North Carolina. EPA Contract No. 68-02-2577. February 1980. p. II-15.

6. Reference 5, p. II-15.

7. Reference 5, p. I-4.

8. Staff of Research and Education Association. Modern Pollution Control Technology. Volume I, New York, Research and Education Association, 1978. pp. 22-23.

9. Standifer, R.L. (Hydroscience.) Emissions Control Options for the Synthetic Organic Chemical Industry. Control Device Evaluation. Gas Absorption. (Prepared for U.S. Environmental Protection Agency.) Research Triangle Park, North Carolina. EPA Contract No. 68-02-2577. May 1980. p. III-5.

10. Perry, R.H., Chilton, C.H. Eds. Chemical Engineers Handbook. 5th Edition. New York. McGraw-Hill. 1973. p. 14-2.

11. Reference 1, p. 76.

12. Reference 2, p. 24.

13. Reference 1, p. 72.

14. Reference 9, p. II-1.

15. Reference 10, p. 14-1.

16. Reference 9, p. III-5.

17. Erikson, D.G. (Hydroscience.) Emissions Control Options for the Synthetic Organic Chemical Industry. Control Device Evaluation. Condensation. (Prepared for U.S. Environmental Protection Agency.) Research Triangle Park, North Carolina. EPA Contract No. 68-02-2577, July 1980, p. II-1.

18. Reference 1, p. 83.

19. Reference 17, p. IV-1.

20. Reference 17, pp. II-3, III-3.

21. Reference 1, p. 84.

22. Reference 17, p. II-1.

23. Reference 17, p. II-3.

24. Reference 17, p. III-5.

25. Kalcevic, V. (IT Enviroscience.) Control Device Evaluation - Flares and the Use of Emissions as Fuels. In: U.S. Environmental Protection Agency. Organic Chemical Manufacturing Volume 4: Combustion Control Device. Publication No. EPA-450/3-80-026. December 1980. Report 4.

26. Klett, M.G. and J.B. Galeski. (Lockhead Missiles and Space Co., Inc.) Flare Systems Study. (Prepared for U.S. Environmental Protection Agency.) Huntsville, Alabama. Publication No. EPA-600/2-76-079. March 1976.

27. Joseph, D., et al. Evaluation of the Efficiency of Industrial Flares Used to Destroy Waste Gases, Phase I Interim Report - Experimental Design, DRAFT. (Prepared for U.S. Environmental Protection Agency.) Research Triangle Park, North Carolina. EPA Contract No. 68-02-3661. January 1982.

28. Palmer, P.A. A Tracer Technique for Determining Efficiency of an Elevanted Flare E. I. duPont de Nemours and Company, Wilmington, DE. 1972.

29. Siegel, K. D. Degree of Conversion of Flare Gas in Refinery High Flares Ph.D. Dissertation, Fridericiana University, Karlsruhe, FRG, 1980.

30. Lee, K.C., and Whipple, G.M., Waste Gaseous Hydrocarbon Combustion in a Flare. Union Carbide Corp., Presented at 74th APCA Annual Meeting, South Charleston, West Virginia. June 1981.

31. Reference 28.

32. Reference 30.

33. Reference 29.

34. Howes, J.E., et al. (Battelle Columbus Laboratories.) Development of Flare Emission Measurement Methodology. Draft Final Report. (Prepared for U.S. Environmental Protection Agency.) Research Triangle Park, North Carolina. August 1981.

35. McDaniel, et al. (Engineering-Science.) A Report on a Flare Efficiency Study (Draft). (Prepared for U.S. Environmental Protection Agency.) Research Triangle Park, North Carolina. September 1982.

36. Reference 34.

37. Reference 35

38. Letter from Matey, J.S., CMA, to Beck, D., EPA. November 25, 1981.

39. Reed, R.J. North American Combustion Handbook. Cleveland, North American Manufacturing Company, 1979. p. 269.

40. Memo and attachments from Farmer, J.R., EPA, to distribution. August 22, 1980. 29 pp. Thermal incinerator performance for NSPS.

41. Reference 40.

42. Devitt, T., et al. The Population of Industrial and Commercial Boilers. PEDCo Environmental, Inc., May 1979. p. xxi, 28.

43. U.S. Environmental Protection Agency. Background Information Document for Industrial Boilers. Research Triangle Park, North Carolina. Publication No. EPA-450/3-82-006a. March 25, 1982. p. 3-27.

44. U.S. Environmental Protection Agency. A Technical Overview of the Concept of Disposing of Hazardous Wastes in Industrial Boilers (Draft). Concinnati, Ohio. EPA Contract No. 68-03-2567. October 1982. p. 44.

45. Reference 44, p. 73.

46. Hunter, S.C. and S.C. Cherry. (KVB) $NO_x$ Emissions from Petroleum Industry Operations. Washington, D.C. API Publication No. 4311. October 1979. p. 83.

47. U.S. Environmental Protection Agency. Evaluation of PCB Destruction Efficiency in an Industrial Boiler. Research Triangle Park, North Carolina. Publication No. EPA-600/2-81-055a. April 1981.

48. U.S. Environmental Protection Agency. Emission Test Report on Ethylbenzene/Styrene. Amoco Chemicals Company. Texas City, Texas. Research Triangle Park, North Carolina. EMB Report No. 79-OCM-13. August 1979.

49. U.S. Environmental Protection Agency. Emission Test Report. El Paso Products Company. Odessa, Texas. Research Triangle Park, North Carolina. EMB Report No. 79-OCM-15. April 1981.

50. U.S. Environmental Protection Agency. Emission Test Report. USS Chemicals. Houston, Texas. Research Triangle Park, North Carolina. EMB Report No. 80-OCM-19. August 1980.

51. Reference 48.

52. Reference 49.

53. Reference 50.

54. Staff of Research and Education Association. Modern Pollution Control Technology. Volume I. New York Research and Education Association, 1978. p. 23-6.

55. Reference 1, p. 32.

56. Kenson, R.E. (Met-Pro Corporation.) A Guide to the Control of Volatile Organic Emissions. Technical Page 10T-1. Harleysville, Pennsylvania. (In-house Brochure). 1981

57. Key, J.A. (Hydroscience.) Emissions Control Options for the Synthetic Organic Chemicals Manufacturing Industry. Control Device Evaluation. Catalytic Oxidation. (Prepared for U.S. Environmental Protection Agency.) Research Triangle Park, North Carolina. EPA Contract No. 68-02-2577. March 1980. p. I-1.

58. Reference 57.

59. Blackburn, J.W. (Hydroscience.) Emissions Control Options for the Synthetic Organic Chemicals Manufacturing Industry; Control Device Evaluation: Thermal Oxidation. (Prepared for U.S. Environmental Protection Agency.) Research Triangle Park, North Carolina. EPA Contract No. 68-02-2577. July 1980. pp. IV-1, V-1.

# 5. MODIFICATION AND RECONSTRUCTION

New Source Performance Standards (NSPS) affect new facilities and existing facilities that have been modified or reconstructed in accordance with the Code of Federal Regulations Title 40, Sections 60.14 and 60.15.[1] An existing facility is defined in 40 CFR 60.2 as a facility of the type for which standards of performance have been promulgated and the construction or modification of which was begun prior to the proposal date of the applicable NSPS.

For plants within the Synthetic Organic Chemical Manufacturing Industry (SOCMI), a reactor facility is a synthetic organic chemical reactor/vent gas processing equipment train. Such a train could consist of individual series or parallel reactors and all equipment used to process or clean vent gases from the reactors (e.g., product/by-product recovery devices). A typical facility may consist of two or more parallel reactors, each feeding process vent streams to one or more product recovery devices (e.g., condensers, absorbers, adsorbers). These product recovery devices can be placed in parallel; that is, more than one device may be used to recover VOC to successively lower levels in the vent stream. Each reactor feeding offgas into separate product recovery devices would constitute a separate facility. A SOCMI reactor facility does not include distillation operations, air oxidation reactors, or fugitive emission sources.

This chapter identifies some possible changes to reactor facilities at SOCMI plants that might be deemed modifications or reconstructions.

## 5.1 MODIFICATION

"Modification" is defined in 40 CFR 60.14(a) as any physical or operational change of an existing facility that increases the emission rate of any pollutant to which a standard applies. Exceptions to this definition are presented in paragraph (e) of Section 60.14. These exceptions are:

1. Routine maintenance, repair, and replacement.
2. An increase in the production rate not requiring a capital expenditure as defined in Section 60.2(bb).

3. An increase in the hours of operation.
4. Use of an alternative fuel or raw material if the existing facility was designed to accommodate that alternative fuel or raw material prior to the effective date of the standards.
5. The addition or use of any system or device whose primary function is the reduction of air pollutants, except when a system is removed or replaced by a system considered to be less efficient.
6. Relocation or change in ownership.

If any other modification is made to the operation of an existing facility that may result in an increased emission rate for each pollutant to which the standard applies, the facility becomes an affected facility under the provisions of Section 60.14.

The following discussion identifies some possible changes to reactor operations used in the SOCMI which might be considered modifications. The magnitude of the industry covered and the complexity of the manufacturing process permit only a general discussion of these possible changes. Furthermore, the list of potential modifications identified for reactor facilities is not exclusive. The following general types of process modifications are identified for reactor facilities:

1. Feedstock or reactant substitution.
2. Process equipment changes.
3. Combinations of the above.

Feedstock or reactant substitution is dictated by economics and the level of availability of the feedstock or reactant. Depending upon the specific process, a change in feedstock may require substantial capital investment to modify the process to accommodate the change. The magnitude of the capital investment may prohibit feedstock substitution for many chemicals.

Over 50 percent of the chemicals considered can be manufactured from two or more different feedstocks. In most cases, feedstock substitution may require equipment and/or process changes as well. For example, cyclohexanone can be manufactured using either phenol or cyclohexanol as the feedstock. Although use of cyclohexanol has predominated in the industry in

the past, at least one plant has changed from cyclohexanol to phenol as the feed material (see Appendix _____, plant Hyd-7). This feedstock substitution required the addition of a hydrogenation reactor to the existing cyclohexanone unit.

For many chemicals, the potential exists to substitute air for pure oxygen as a reactant or vice versa. These reactant substitutions may increase VOC emissions to the atmosphere and as a result may constitute a modification. Either of these may be substituted for chemical oxidation processes as well. Changing to an air oxidation process may be an advantage because (1) air is readily available and (2) expensive corrosion-resistant materials are not required compared to the use of chemical oxidants. However, there may be major disadvantages in changing from an oxygen or chemical oxidation process to an air oxidation process, including a substantial reduction in plant capacity, a large increase in the reactor-related process vent stream flowrate, and an altered product mix.

Process equipment changes may also constitute modifications. Examples of potential modifications are the replacement of a fixed-bed reactor with a fluidized-bed reactor, increasing the plant capacity by increasing the size of the reactor or adding additional reactors, and a change in the product recovery system ( e.g., from an absorber to a condenser). Based on a survey of chemical plant construction summaries for the last 5 years, plant capacity expansions are expected to be the most wide-spread potential modification. Such changes might be considered modifications since they can result in increased VOC emissions to the atmosphere.

A combination of the changes described above would be chosen in any given situation with the decision based on the most advantageous economics. The combination of changes might be considered a potential modification if they resulted in an increase in emissions. The most common combinations are plant expansions or simultaneous changes in feedstock and catalyst as described earlier. Other combinations are possible and currently are encountered.

## 5.2 RECONSTRUCTION

Under the provisions of Section 60.15, an existing facility becomes an affected facility upon reconstruction, regardless of changes in pollutant

emission rates. Reconstruction is defined as the replacement of components whose costs exceed 50 percent of the fixed capital cost of a comparable, entirely new facility. Futhermore, the facility is considered an affected facility if it is economically and technically feasible for the facility to comply with the applicable standards of performance. The final judgement on what replacement constitutes reconstruction and when it is technologically and economically feasible to comply with the applicable standards of performance is made on a case-by-case basis by the Administrator. The Administrator's final determinations are made considering the following bases:

1. Comparison of the fixed capital costs of the replacement components and a comparable, entirely new facility,
2. Comparison of the estimated life of the facility after the replacements and the life of a comparable, entirely new facility,
3. The extent to which the components being replaced cause or contribute to the emissions from the facility, and
4. Any economic or technical limitations on compliance with applicable standards of performance which are inherent in the proposed replacements.

The purpose of this provision is to prevent an owner or operator from perpetuating an existing facility by replacing all but vestigial components, support structures, frames, housing, etc., rather than totally replacing the facility in order to avoid applicability to an NSPS. In accordance with Section 60.5, EPA will, upon request, determine if the action taken constitutes construction (including reconstruction).

## 5.3 REFERENCES


1. The U.S. Environmental Protection Agency. Code of Federal Regulations. Title 40, Chapter I, Subpart A, part 60. Washington, D.C., Office of The Federal Register.

2. CE Construction Alerts. Chemical Engineering. 90: 80-81. April, 1983. 89: 128-129. May, 1982. 88: 152-155. April, 1981. 87: 134-136. April, 1980. 86: 96-98. March, 1979.

# 6. REGULATORY ANALYSIS

This chapter describes the method of regulatory analysis used in the development of new source performance standards (NSPS) for distillation operations. The selection of the control options used in the regulatory analysis is discussed. The methods of presenting the regulatory alternatives are discussed and the range of results are presented.

The regulatory analysis is based on the screened National Emission Profile (NEP) (see Chapter 3) that represents the national VOC emissions from distillation operations. To project the national impacts in the fifth year of NSPS implementation, the results of the regulatory analysis must be scaled up from the number of distillation units in the profile (195) to the number of new, modified, or reconstructed units expected nationally (1200). The results presented in Section 6.4 have been scaled up to represent the 1200 new distillation units expected nationally.

## 6.1 OVERVIEW OF THE REGULATORY ANALYSIS

Typically, new source standards are developed for an industry that utilizes one or two processes to manufacture a specific product. For such a case, one or two model plants are generally designed to illustrate the emissions and control device requirements of typical new sources within that industry. These model plants, projected onto the number of new sources coming on-line in a specified time period, are then used to analyze the economic, energy, and environmental impacts of several regulatory alternatives. The regulatory alternatives are generally based on the use of several applicable control devices that may have different control efficiencies, costs, and energy requirements. The results of this regulatory analysis permit selection of the regulatory alternative that reflects the emission reduction achievable (considering costs) through application of the best demonstrated technology for continuous emission reduction. The selection process also includes consideration of any non-air quality health, environmental, and energy impacts.

Hundreds of organic chemicals are manufactured using a multitude of different processes in the organic chemical manufacturing industry. Development of standards for VOC emissions from the production of each chemical or process would be time-consuming and extremely resource intensive. Close examination of production processes in the organic chemical manufacturing industry shows that, although the manufacture of organic chemicals is complex and diverse, volatile organic compound (VOC) emissions originate primarily from a few sources such as equipment leaks (fugitive emission sources), storage tank vents, reaction system vents, and distillation operation vents. The characteristics of equipment and processing operation within a source type are similar enough to make possible the development of widely applicable standards for each source type, i.e. unit operations standards. For example, emissions from distillation operations result from the release into the atmosphere of noncondensibles which may contain organic compounds. This common emission mechanism and the basic similarities among distillation equipment used by chemical manufacturers make the development of unit operations standards applicable to all distillation operations feasible and practical given limited time and resources.

This broad approach applied to distillation operations results in three major differences in the standards development process from the typical standards development. First, the screened NEP (introduced in Chapter 3) representing future distillation vent streams under a baseline (no NSPS) scenario is used as the basis from which to estimate the energy, cost, and environmental impacts of regulatory alternatives instead of the model plant approach. Typical or model distillation operations could not be developed that would adequately represent the population of new distillation units.

Second, instead of examining only a few regulatory alternatives, (usually representing application of different control devices of varying effectiveness), a range of regulatory alternatives is analyzed, each assuming universal application of one type of control (combustion) to varying numbers of new distillation units. As shown in the control device discussions in Chapter 4, combustion is the only control technique

universally applicable to control of distillation vent emissions. The extremes of regulatory alternatives vary from no required control of distillation vent streams to control of all distillation vent streams. Between these extremes, regulatory alternatives are based on control of varying proportions of the population of new distillation units. A ranking of the units controlled in the screened NEP is provided based on the cost effectiveness or total resource effectiveness (TRE; see Appendix G) of added VOC control (i.e. cost per unit of emission reduction achieved). By considering discrete TRE levels between no additional control and control of all columns, a complete range of regulatory alternatives based on a single control technique can be examined.

Third, all noncombustion control devices are considered part of the affected facility for the regulatory analysis. Thus, the uncontrolled emissions for each distillation unit in the screened NEP (see Chapter 3) are defined using the emission stream characteristics determined after all noncombustion devices such as scrubbers, adsorbers, and condensers. These devices are used more often for product recovery than air pollution control.

Excepting these three departures from the typical regulatory analysis framework, the impacts of each regulatory alternative are determined in the same manner as for other standards development programs. Control devices are sized and costed for each distillation unit in the screened NEP and the associated impacts are determined. As in a typical regulatory analysis framework, the control devices examined in the regulatory analysis are chosen based on applicability to the sources under investigation.

## 6.2 SELECTION OF CONTROL OPTIONS

Industrial experience indicates that many types of control devices, including condensers, absorbers, adsorbers, incinerators, boilers, and flares, can be used to reduce VOC emissions from distillation units. Selection of the best VOC control device for a particular distillation unit emission stream and determination of the degree of control achievable depend upon the chemical composition of the emission stream and other process characteristics. The stream flowrate, VOC concentration, the chemical and physical properties of the stream components, and the stream temperature may

greatly affect the effectiveness of devices such as condensers, adsorbers, and absorbers. As a result, none of these product recovery devices is considered suitable for VOC reduction for every distillation unit emission stream.

Thermal oxidation, however, using a boiler, a flare, or a thermal incinerator is much less dependent upon process and emission stream characteristics. Consequently, it is the only demonstrated VOC control technique universally applicable to organic chemical distillation operations. Furthermore, thermal oxidation can achieve the highest possible VOC control level of all currently demonstrated technologies.

Boilers achieve a 98 percent reduction of VOC emissions and can be applied at a reasonable cost to all nonhalogenated streams except those that create safety or boiler reliability problems. They are the least expensive of the three combustion devices since they are assumed to exist in the plant already (only pipeline connections are needed) and VOC destruction can provide energy credit by reducing fuel consumption. Incinerators can also achieve a 98 percent reduction of VOC emissions, can be applied to all halogenated and nonhalogenated streams, but are generally the most costly of the three devices. Flares are judged to achieve 98 percent efficiency in destroying VOC over a wide range of stream characteristics and operating conditions, can be applied to all nonhalogenated streams, and generally can control VOC emissions in nonhalogenated streams for less cost than incinerators.

Due to the limitations of applicability and relative differences in cost between these three combustion devices, no single combustion device can be determined to be BDT for the entire distillation source category. Therefore, BDT for this source category has been determined to be as follows: 1) for nonhalogenated streams, except for those instances where safety or reliability problems would be created, BDT is a boiler; 2) for nonhalogenated streams that create safety and reliability problems for boilers, flares are BDT; and 3) for halogenated streams incinerators are BDT.

For the purpose of the regulatory analysis, the impacts of combustion control of distillation emission streams are based on the use of flares for nonhalogenated streams and incinerators for halogenated streams. Flares can be applied to all nonhalogenated streams with few, if any, safety or reliability problems, but they are assumed to be more expensive than boilers. Thus, the use of flares for impact evaluation would result in more conservative estimates of control costs than would the use of boilers.

Although the three combustion devices have been determined to be BDT for organic chemical distillation operations as a whole, Section 111 of the Clean Air Act permits the distinction among classes, types, and sizes within categories of new sources for the purpose of establishing NSPS. Since vent stream characteristics vary widely, both the cost per unit emission reduction and the adverse environmental impacts of applying combustion devices also are expected to vary widely. Therefore, it is possible that for some vent streams the cost or environmental impacts of applying controls would be so large that BDT for these streams would be no additional control.

## 6.3 SUMMARY OF THE SCREENED NATIONAL EMISSION PROFILE (NEP)

In order to evaluate the impacts of controlling distillation emission streams by combustion, the screened NEP is used to represent existing distillation vent streams. This profile is further assumed to represent the distribution of new distillation vent streams expected in the future. A summary of the screened NEP appears in Table 6-1. Since only a limited amount of data is needed to evaluate the impacts of using combustion control devices on distillation vent streams, the screened NEP provides a statistical profile on which the regulatory analysis can be based. Further information on the NEP and screened NEP, illustrating available data in the profile and the method of VOC emission factor development, is provided in Chapter 3.

Before the regulatory analysis can be made, however, the existing control level must be considered. As discussed in Chapter 3, this control level depends to a large extent on existing local and State regulations. The screened NEP is adjusted to represent existing (baseline) controls and is called the baseline control profile. Considering the existing control

TABLE 6-1. OVERVIEW OF THE SCREENED NATIONAL EMISSION PROFILE

| | |
|---|---|
| 1. Units Screened Out of NEP | |
| Total number of units in the NEP | 1037 |
| Units at plants with incomplete data[a] | 392 |
| Units with recycled emissions, or zero flowrate | 450 |
| Number of Units in Screened NEP | 195 |
| 2. Operating Characteristics of the Screened NEP | |
| Average offgas flowrate, $m^3$/min (scfm) | 1.0 (36) |
| Flow range, $m^3$/min (scfm) | 0.001-18 (0.005-637) |
| Average VOC emission rate, kg/hr (lb/hr), precontrolled[b] | 36 (78) |
| Average VOC emission rate, kg/hr (lb/hr), controlled[c] | 5.9 (13) |
| VOC emission range, kg/hr (lb/hr), precontrolled | 0-1670 (0-3668) |

[a]There are a number of plants in the NEP for which there were distillation units with insufficient data to permit calculation of VOC control costs.

[b]Calculated downstream of adsorbers, absorbers, and condensers, but upstream of combustion devices.

[c]Controlled VOC emission rates were estimated using a 98 percent destruction efficiency for flares, boilers, and incinerators (where it was indicated that control devices were being used).

levels in both categories (SIP states and non-SIP states) in the screened NEP, the baseline control level is established at about 81 percent. The baseline control profile is used to predict the impacts of various regulatory alternatives.

## 6.4 RESULTS OF REGULATORY ANALYSIS

As described earlier in the chapter, the regulatory analysis involves examination of the impacts of applying combustion control systems to the individual vent streams given in the statistical profile, or screened NEP. The analysis simulates the application of controls to varying numbers of the population of new distillation units. The lower extreme of the regulatory alternatives is represented by no additional control, or baseline control (i.e. about 81 percent). And the upper bound on the regulatory alternatives is represented by controlling all distillation units in the screened NEP (i.e. 98 percent emission reduction). Regulatory alternatives between these extremes are investigated by controlling varying proportions of the units in the NEP. For each control system applied to each unit in the screened NEP, the associated impacts (annualized cost, capital cost, energy requirement, emission reduction, cost effectiveness of control) are calculated.

By costing individually controlled distillation columns in the regulatory analysis, a large degree of conservatism is introduced into the costs of control. But, in those plants having more than one distillation column, ducting of multiple streams to a common control device would lower the total control costs for that plant. Therefore, this approach to combining streams in a given plant was used in developing the cumulative costs for the regulatory analysis. Plants already having controls available would probably employ these existing devices for control of other streams. By not considering this possibility, additional cost conservatism is introduced.

The easiest way to study the application of controls to individual units in the screened NEP is to rank the units. Controls would be added to units according to the ranking sequence. Ranking is best presented in terms of the impacts associated with control: cost, energy, or environmental.

Cost effectiveness is a cost of control per unit emission reduction achieved. A cost effectiveness value is often useful since it describes not only a cost impact, but also the primary environmental impact. Therefore, a ranking based on some type of cost effectiveness value was selected as the best means of presenting the regulatory alternatives.

Cost effectiveness can be described in terms of an individual value, an average value (consider the cumulative values), or an incremental value taken across the ranked profile. The individual value is the annualized cost of control per unit emission reduction achieved by the control device and thus describes the cost effectiveness of controlling a single column. The average value is the cumulative cost of control in the ranking per cumulative emission reduction achieved through application of controls. This value is generally low and does not accurately reflect the cost effectiveness actually incurred by the owner or operator of a distillation unit. The incremental cost effectiveness across the ranked profile is the increase in cumulative cost in the ranked profile per increase in associated emission reduction. Such incremental values are often useful in evaluating different control techniques, but they can be misleadingly high when applied to a statistical profile like the screened NEP. Since individual column control costs are of greatest interest in this study, the individual cost effectiveness value was chosen as the basis of the ranking for the regulatory analysis. And to avoid confusion among the type of cost effectiveness used for the analysis, it is defined as the total resource effectiveness (TRE). Methods of determining TRE are developed further in Appendix G.

Under a TRE ranking, control systems are added to those distillation columns in the screened NEP so that for any regulatory alternative the least overall cost per unit emission reduction is attained. The resources (costs) required for control were calculated based on use of flares on nonhalogenated vent streams and use of incinerators for halogenated vent streams. Flares were chosen instead of boilers for nonhalogenated vent streams because flares present more conservative annualized cost estimates and because they can be used in all instances, whereas boilers are not always

applicable. Using results from the regulatory analysis, the number of units controlled at several selected TRE levels are presented in Table 6-2. These levels span the entire range of regulatory alternatives. Because emission stream VOC content and heating value generally are related inversely to supplemental energy and capital requirements for VOC control, those streams containing the highest levels of VOC are ranked before lower concentration streams. Therefore, TRE can be used to evaluate the achievability of a given control level by using the least possible amount of total resources. Other results from the regulatory analysis are presented in Chapter 7.

TABLE 6-2. RELATIONSHIP BETWEEN NUMBER OF UNITS EXPECTED TO BE CONTROLLED AND PERCENTAGE OF UNITS REQUIRING CONTROL AT VARIOUS TRE LEVELS

| TRE, $/Mg | Percentage of Units Requiring Control | Number of Units Requiring Control | Number of Units Expected to be Controlled* |
|---|---|---|---|
| 0 (Baseline) | 0 | 0 | 312 |
| 100 | 9.7 | 117 | 343 |
| 300 | 17.4 | 209 | 375 |
| 600 | 22.6 | 271 | 430 |
| 1000 | 30.3 | 363 | 509 |
| 1400 | 37.4 | 449 | 596 |
| 1900 | 42.6 | 511 | 654 |
| 2500 | 44.6 | 535 | 654 |
| 2900 | 45.1 | 542 | 660 |
| 3500 | 52.3 | 628 | 702 |
| 9000 | 58.5 | 702 | 778 |
| 20000 | 66.7 | 800 | 857 |
| 75000 | 79.5 | 954 | 1001 |
| ∞ | 100 | 1200 | 1200 |

*Some units not required to use combustion control as a result of NSPS are expected to be controlled for other reasons.

# 7. ENVIRONMENTAL AND ENERGY IMPACTS

This chapter presents estimates of the nationwide environmental impacts that would result from implementation of combustion control (flare, boiler, incinerator) to distillation vent streams. The estimates are based on an analysis of the distillation vent streams listed in the screened National Emission Profile (NEP). Impacts on air quality, water quality, solid waste, and energy requirements are presented. The analysis considers both the impacts attributed directly to a control device (e.g., reduced VOC emissions) and the indirect or secondary impacts (e.g., aggravation of another pollutant problem through the use of a control device). The beneficial and adverse impacts of VOC control are examined, with emphasis on an assessment of the national incremental impacts of successively more stringent regulatory alternatives.

As discussed in Chapter 6, the regulatory alternatives range from the baseline level of control (no additional control of new units required) to requiring combustion controls on all new distillation units. Within this range, varying percentages of new units would be required to use combustion devices for VOC control. For selected regulatory alternatives (control levels), the associated environmental impacts are presented. The procedure for determining these impacts is reviewed briefly here.

The determination of the various impacts is the focus of the regulatory analysis. In this analysis, control devices are applied individually to each of the 195 distillation columns listed in the screened NEP, simulating application of controls to new distillation units. For each control device applied (flare, boiler, incinerator), the associated cost, energy, and environmental impacts are calculated for each column. These impact calculations are based upon the heat and material balance computation, equipment sizing, and costing criteria discussed in Chapter 8 and Appendix F.

To determine the sequence in which distillation units in the screened NEP should be controlled, they are ranked in order of increasing total resource effectiveness or TRE of control (see Appendix G). This ranking of units results in a continuously increasing resource cost per unit of emission reduction across the entire screened NEP. By examining various TRE levels, a wide spectrum of regulatory alternatives can be evaluated, ranging from the baseline control level (no additional VOC control) to the 98 percent control level associated with control of all distillation units. As a result, the analysis provides a range of regulatory alternatives and associated impacts.

In order to represent national impacts in the fifth year of NSPS implementation, the analysis results are scaled up using the ratio of the expected new distillation units (1200)* to the number of distillation units in the screened NEP (195). This chapter presents the national impacts for new sources for selected TRE levels which span the range of regulatory alternatives considered.

The national impacts are dependent on the control device actually selected by the plant. The VOC control efficiency assumed for the combustion devices considered in the regulatory analysis is 98 percent for incinerators, boilers, and flares. The energy requirements for each device are substantially different, however. Furthermore, the use of incinerators is almost always more expensive than the use of either flares or boilers. It is assumed for the purpose of this analysis that incinerators will not be the preferred control devices for nonhalogenated streams due to the cost disadvantage. On the other hand, incinerators are assumed to be used for

*As described in Section 9.1.3, it is estimated that 605 new plants will come on stream in the first 5 years of NSPS. (A plant, in this case, is a chemical site, that is, one or more process units that are located at one site and used to produce one particular chemical. In ordinary usage, a plant consists of one or more process units that are located at one site and used to produce one or more chemicals.) The NEP indicates that there are approximately 3.4 distillation units per plant and that 58% of all distillation units have VOC emissions. Therefore, the number of new units expected to be affected by a distillation NSPS is 605 x 3.4 x .58 = 1193 or 1200.

halogenated streams where flares and boilers are not always applicable. Since the choice between using boilers or flares depends on various criteria other than stream composition and flow (see Section 4.2.3.3), two impact analyses are presented for all nonhalogenated streams, one assuming use of flares (unless other devices are used under baseline) and one assuming use of boilers.

## 7.1 AIR POLLUTION IMPACTS

### 7.1.1 Effects of VOC Control

The primary impacts of the regulatory alternatives considered consist of VOC emission reductions from organic chemical distillation operations. VOC emissions from affected distillation facilities in 1987 were estimated using the projected number of new plants (see Chapter 9) and the emissions data contained in the screened NEP.

The total precontrolled* 1987 emissions from new distillation operation vents would be 273,000 Mg/yr (300,000 tons/yr). At the estimated baseline control level, 81 percent of these emissions are controlled. Thus, the national VOC emissions from new distillation units at the baseline control level are 51,000 Mg/yr (56,000 tons/yr).

Tables 7-1 and 7-2 present the 1987 VOC emissions reductions for various representative control levels spanning the range of regulatory possibilities. The analysis presented in Table 7-1 assumes that all distillation operations requiring control will use a flare except for vent streams containing halogenated VOC, which are controlled by incinerator/scrubber systems. The analysis presented in Table 7-2 assumes that all distillation operations requiring control will use a boiler except for streams containing halogenated VOC, which will use an incinerator/scrubber system. The most stringent control level, representing control of all distillation units, would provide 46,000 Mg/yr (50,000 tons/yr) of VOC emissions reduction beyond the baseline level of control for new distillation sources.

*"Precontrolled" refers to emissions downstream of product recovery devices projected to be installed (based on the screened NEP), but upstream of any combustion device.

TABLE 7-1. VOC EMISSIONS AND ENERGY REQUIREMENTS FOR FLARE PREFERENCE*

| Percent Of Units Requiring Control | TRE** | National Emissions ($10^3$ Mg/yr) | National Emission Reduction Baseline ($10^3$ Mg/yr) | National Energy Impacts ($10^4$ MM Btu/yr) |
|---|---|---|---|---|
| 0 (Baseline) | 0 | 51.0 | 0 | 0 |
| 9.7 | 100 | 24.4 | 26.6 | 7.2 |
| 17.4 | 300 | 20.3 | 30.7 | 8.4 |
| 22.6 | 600 | 17.2 | 33.8 | 11.3 |
| 30.3 | 1,000 | 10.8 | 40.2 | 43.7 |
| 37.4 | 1,400 | 8.8 | 42.2 | 50.5 |
| 42.6 | 1,900 | 7.1 | 43.9 | 54.5 |
| 44.6 | 2,500 | 7.1 | 43.9 | 54.6 |
| 45.1 | 2,900 | 7.0 | 44.0 | 54.7 |
| 52.3 | 3,500 | 6.6 | 44.4 | 55.7 |
| 58.5 | 9,000 | 6.1 | 44.9 | 64.9 |
| 66.7 | 20,000 | 5.8 | 45.2 | 73.9 |
| 79.5 | 75,000 | 5.5 | 45.5 | 95.4 |
| 100 | ∞ | 5.5 | 45.5 | 110 |

*Calculated for 1982 through 1987.

**TRE represents the cost per Mg of VOC removed for the last distillation column to be controlled in the regulatory possibility. See Chapter 6 and Appendix G for a more detailed discussion of TRE.

TABLE 7-2. VOC EMISSIONS AND ENERGY REQUIREMENTS FOR BOILER PREFERENCE*

| Percent Of Units Requiring Control | TRE** | National Emissions ($10^3$ Mg/yr) | National Emission Reduction Baseline ($10^3$ Mg/yr) | National Energy Impacts ($10^4$ MM Btu/yr) |
|---|---|---|---|---|
| 0 (Baseline) | 0 | 51.0 | 0 | 0 |
| 9.7 | 100 | 24.4 | 26.6 | (242)*** |
| 17.4 | 300 | 20.3 | 30.7 | (267) |
| 22.6 | 600 | 17.2 | 33.8 | (277) |
| 30.3 | 1,000 | 10.8 | 40.2 | (282) |
| 37.4 | 1,400 | 8.8 | 42.2 | (284) |
| 42.6 | 1,900 | 7.1 | 43.9 | (283) |
| 44.6 | 2,500 | 7.1 | 43.9 | (283) |
| 45.1 | 2,900 | 7.0 | 44.0 | (285) |
| 52.3 | 3,500 | 6.6 | 44.4 | (288) |
| 58.5 | 9,000 | 6.1 | 44.9 | (286) |
| 66.7 | 20,000 | 5.8 | 45.2 | (282) |
| 79.5 | 75,000 | 5.5 | 45.5 | (268) |
| 100 | ∞ | 5.5 | 45.5 | (272) |

* Calculated for 1982 through 1987.

** TRE represents the cost per Mg of VOC removed for the last distillation column to be controlled in the regulatory possibility. See Chapter 6 and Appendix G for a more detailed discussion of TRE.

*** Parentheses indicate energy credit due to conservation of normal fuel requirements.

### 7.1.2 Other Effects on Air Quality

Some adverse effects on air quality are associated with the use of combustion devices to reduce VOC. Pollutants generated by the combustion process, particularly nitrogen oxides ($NO_x$), may have an unfavorable impact on ambient air quality. The principal factors affecting the rate of $NO_x$ formation are the amount of excess air available, the peak flame temperature, the length of time the combustion gases are at peak temperature, and the cooling rate of the combustion products.[1] For thermal oxidizers, the rate of $NO_x$ formation is expected to be low due to relatively low combustion temperatures and relatively short residence times.

Thermal oxidizer outlet concentrations of $NO_x$ were measured in seven sets of thermal oxidizer tests conducted at three air oxidation plants. The test results indicate that $NO_x$ outlet concentrations range from eight to 200 ppmv (0.015 to 0.37 $g/m^3$). These values could increase by several orders of magnitude in a poorly designed or operated unit. These tests are described and documented in Appendix D. Although there are conflicting data, some studies report that incineration of vent streams containing high levels of nitrogeneous compounds may also result in increased $NO_x$ emissions.[2] The maximum outlet $NO_x$ concentration measured from a combustion device at an acrylonitrile plant was 200 ppmv. The vent stream of this plant contains nitrogeneous compounds. The $NO_x$ concentrations measured at two other plants, where the vent streams do not contain nitrogeneous compounds, range from 8 to 30 ppm (0.015 to 0.056 $g/m^3$).

Control by thermal oxidation of halogenated VOC emissions may result in the release of halogenated combustion products to the environment. However, flue gas scrubbing can be used to remove these compounds from the incinerator outlet stream. Incineration temperatures greater than 871°C (1600°F) are required to ensure near total destruction of halogenated VOC. For example when incinerating chlorinated VOC at temperatures of 980°C to 1100°C (1800°F to 2000°F), almost all chlorine present exists in the form of hydrogen chloride (HCl). The HCl emissions generated by thermal oxidation at these temperatures can be removed efficiently be wet scrubbing.[3]

## 7.2 WATER POLLUTION IMPACTS

Control of VOC emissions using thermal oxidation does not result in any significant increase in wastewater discharge by distillation unit operations. That is, no water effluents are generated by the thermal oxidizer.

The use of an incinerator/scrubber system for control of halogenated VOC vent streams results in increased water consumption. In this type of control system, water is used to remove the acid gas contained in the thermal oxidizer outlet stream. The increase in total plant wastewater would be relatively small and would not affect plant waste treatment or sewer capacity. However, the absorbed acid gas may cause the water leaving the scrubber to have a low pH. This acidic effluent could lower the pH of the total plant effluent if it is released into the plant wastewater system.

The water effluent guidelines for individual states may require that industrial sources maintain the pH of water effluent within specified limits. To meet these guidelines, the water used as a scrubbing agent may need to be neutralized prior to discharge to the plant effluent system. The scrubber effluent can be neutralized by adding caustic (NaOH) to the scrubbing water. The amount of caustic needed depends on the amount of acid gas in the waste gas. For example, approximately 1.09 kilograms (2.4 pounds) of caustic (as NaOH) are needed to neutralize one kilogram (2.2 pounds) of HCl.

The salt formed in the neutralization step must be purged from the system and properly eliminated. The methods of disposal include direct waste water discharge or salt recovery. The increased water consumption and caustic costs were included in the projected operating costs for units in the screened National Emission Profile indicating halogenated VOC vent streams. About 15 percent of the units in the screened NEP have halogenated VOC in the vent gases. The national caustic (as NaOH) consumption is estimated to be 3,750 Mg/yr (4,120 tons/yr) at an annual cost of about $360 thousand. Approximately 86 percent of these requirements are for only 2 percent of the national population, however. The cost associated with the disposal of the salt were not judged to be significant in comparison to the control costs, and therefore, were not included in the projected impacts.

## 7.3 SOLID WASTE DISPOSAL IMPACTS

There are no significant solid wastes generated as a result of control by thermal oxidation. A small amount of solid waste for disposal could result if catalytic oxidation, instead of thermal oxidation, were used by a facility to achieve an equivalent degree of VOC control. The solid waste would consist of spent catalyst. If a facility were to use an additional absorption column for improved product recovery as an alternative to meeting the NSPS with a combustion device, a small amount of solid waste could be generated by cleaning the column.

## 7.4 ENERGY IMPACTS

### 7.4.1 Energy Requirements for Combustion Devices

The use of combustion devices to control VOC from distillation vents can result in a net energy savings in some cases, while in other instances a net fuel usage results. The use of an existing boiler for control of energy-rich streams generally results in a net savings of the fuel normally used in the boiler. An extremely low energy value of the distillation vent stream may severely compromise the steam production rate, however. The use of an incinerator results in a net energy usage if supplemental fuel is needed to support combustion, or to promote flame stability. Flares can also require supplemental fuel for flame stability if the heat content of the vent stream is very low.

The determination of fuel usage requirements for all three types of combustion equipment is discussed as part of the overall cost methodology in Section 8.1 and is detailed in "Distillation Operations Regulatory Analysis Program Guide" which describes the computer programs used in the regulatory analysis.[4]

Tables 7-1 and 7-2 present the energy requirements for various control levels in the range of regulatory alternatives. Table 7-1 presents the requirements for a flare preference and Table 7-2 presents the requirements for a boiler preference (see Section 7.1.1).

### 7.4.2 Other Energy Requirements

Electricity is required to operate the pumps, fans, blowers, and instrumentation that may be necessary to control VOC using a boiler, incinerator, or flare. Fans and blowers are needed to transport vent streams and combustion air; pumps are necessary to circulate absorbent through a scrubber required to treat corrosive offgases from a incinerator combusting halogenated VOC.

## 7.5 OTHER ENVIRONMENTAL IMPACTS

### 7.5.1 Considerations for Installing Control Equipment

Depending on the volume of offgas to be controlled, thermal oxidizers may require a site as large as 300 feet by 300 feet for installation. Because thermal oxidizers use combustion with a flame to control VOC emissions, these units must be located at a safe distance from process equipment handling flammable chemicals; otherwise, special precautions must be taken to minimize the risk of explosion or fire.

## 7.6 OTHER ENVIRONMENTAL CONCERNS

### 7.6.1 Irreversible and Irretrievable Commitment of Resources

The use of combustion devices to control VOC emissions from distillation operations usually requires the use of supplemental energy in the form of natural gas. The adverse effects of using these nonrenewable resources must be considered when evaluating the benefits of controlling the release of potentially harmful air pollutants.

The use of product recovery techniques or process modifications is another alternative to reduce VOC emissions. Control of VOC emissions using product recovery techniques might be a viable alternative to combustion control for some distillation facilities. Since the distillation vent streams containing VOC also are derived ultimately from petroleum, these techniques would result in conservation of both chemicals and fuels derived from petroleum.

### 7.6.2 Environmental Impact of Delayed Standards

Delay of standards for distillation operations could result in significant adverse impacts on ambient air quality. Based on industry growth

projections, distillation facilities controlling VOC emissions at current baseline levels (i.e., 81 percent national VOC reduction) would emit 78,000 Mg/yr (86,000 tons/yr) of VOC in 1987 compared to 6,000 Mg/yr (6,600 tons/yr) under the most stringent control level (100 percent of distillation vent streams controlled by 98 percent efficient control device).

The energy considerations of a delayed standard are difficult to assess. If all owners or operators chose to control distillation emissions by means of a boiler, an energy savings would result. However, because of cost, safety, or other considerations, many owners or operators would probably use flares, resulting in some energy use. The most likely situation, where a mix of boilers and flares are used, would result in a very small impact on national energy use. In this instance, the energy impact of delaying the standard would be slight.

## 7.7 REFERENCES


1. Blackburn, J.W. (Hydroscience). Emissions Control Options for the Synthetic Organic Chemicals Manufacturing Industry. Control Device Evaluation. Thermal Oxidation. (Prepared for U.S. Environmental Protection Agency.) Research Triangle Park, N.C., EPA Contract No. 68-02-2577. July 1980. p. V-43.

2. Basdekis, H.S. (Hydroscience). Emissions Control Options for the Synthetic Organic Chemicals Manufacturing Industry. Control Device Evaluation. Thermal Oxidation Supplement (VOC-Containing Halogens or Sulfur). (Prepared for U.S. Environmental Protection Agency.) Research Triangle Park, N.C., EPA Contract No. 68-02-2577. November 1980. pp. II-4, II-6.

3. Reference 2, p. III-15.

4. Memo from Senyk, D. and J. Stelling, Radian Corporation, to Distillation File. August 30, 1982. 192 p. Distillation Operations Regulatory Analysis Program Guide.

# 8. COSTS

This chapter presents the approach taken to estimate the cost of controlling volatile organic compound (VOC) emissions from distillation operations used in the manufacture of synthetic organic chemicals. Design and cost equations are presented for the boiler, flare and incinerator control systems considered in the regulatory analysis. In examining the range of regulatory alternatives described in Chapter 6, the total resource cost of controlling individual vent streams is determined by applying these cost equations to vent streams characterized in the screened National Emission Profile (NEP). Each vent stream in the screened NEP is ranked according to the total resource effectiveness (TRE) of VOC control, expressed in $/Mg of VOC controlled. Control systems are then applied to all streams incurring a resource cost at or below a specified cutoff value. National cost impacts for a specified cutoff level are determined by summing the control costs for all vent streams where controls are applied. National costs for a wide range of cutoff values have been calculated. These costs are projected to 1987 by estimating the number of new distillation units expected.

The costing approach used for the regulatory analysis differs from the worst case costing approach used in the economic analysis presented in Chapter 9. The differences between these two approaches are discussed in Section 8.2.3. The costs associated with other environmental regulations affecting plants using distillation operations are discussed in Section 8.3.

## 8.1 DEVELOPMENT OF CONTROL SYSTEM COSTS

This section presents the methodology used to develop VOC control system costs for boilers, flares and incinerators. In addition, costs for each control system are presented and discussed. A control system consists of a combustion control device and all associated equipment needed to couple

the device to the emission source. For example, an incinerator control system consists of the incinerator combustion chamber, ducts, fans, stack, recuperative heat exchanger (when applicable), quench/scrubber system, transport pipelines, and compressor. A common pipeline model is applied to all control systems. Therefore, the discussion of pipeline design and capital costs are presented separately from the control device discussions.

Cost development consists of the following two tasks: sizing the control system and costing the system. The general approach used consists of determining the design parameters for a control system applied to a particular VOC stream. Based on these design parameters, the system is costed using cost equations developed from vendor and industry supplied information.

8.1.1 Control System Sizing

In general, equations are used to calculate equipment size, operating conditions, reagent consumption (caustic) and utility use (fuel, electricity, steam, water) for any set of vent stream characteristics.[1,2,3] A control system is selected and sized based on the vent stream flow rate, VOC content, and chlorine content. This section highlights the important features of the design analysis and summarizes the methodology used to determine the basic design and operating parameters used to determine costs. The equations used are outlined in more detail in Appendix F.

8.1.1.1 Thermal Incinerator. The thermal incinerator system consists of the following equipment: combustion chamber, recuperative heat exchanger, quench/scrubber system, ducts, fan and stack. The incinerator sizing equations estimate the combustion chamber volume, heat exchanger surface area (where applicable), and various system operating parameters. These estimated equipment sizes and operating parameters are used to determine the total installed capital cost of the incinerator system.

The combustion chamber volume is a function of the incinerator residence time and calculated flue gas flowrate. For a specific vent stream, the flue gas flowrate is determined through mass and energy balances based on the incinerator temperature, the primary and supplementary natural gas requirements and the excess air level assumed. These general design

specifications, presented in Table 8-1, were developed in a report by IT Enviroscience (formerly Hydroscience) and are based on vendor supplied data.[4] Vendor contacts indicate that a combustion chamber volume of 1.01 $m^3$ (35.7 $ft^3$) is the smallest size commercially available.[5] For vent streams requiring a combustion chamber volume smaller than 1.01 $m^3$, the 1.01 $m^3$ size is applied. To compensate for the application of an oversized combustion chamber in this case, natural gas and air are added to maintain the desired temperature and residence time for this oversized incinerator.

A recuperative heat exchanger, which preheats combustion air, is provided when its use does not result in exceeding the design incinerator temperature. For example, a heat exchanger is not applied to vent streams with heating values high enough to maintain or exceed the desired incinerator temperature, because further increasing the temperature could result in damage to the combustion chamber and would not provide any fuel savings. When a recuperative heat exchanger is applicable, the surface area is calculated based on the combustion air flow rate, ambient air temperature, flue gas temperature and the overall heat transfer coefficient presented in Table 8-1.

It is assumed the thermal incinerator uses a quench/scrubber system for all streams containing corrosive chlorine compounds. Water is used to cool the flue gases in a quench chamber before introduction to the scrubber for acid gas removal. The acidic water resulting from waste gas scrubbing is neutralized with caustic. The quench water and caustic requirements are determined through mass and energy balances and the general scrubber design specifications listed in Table 8-1. Calculation of the scrubber volume and diameter is not required since the equipment cost is a function of gas flowrate and not the volume and diameter as discussed in Section 8.1.2. However, the quench/scrubber costs are based on the general design specifications outlined in Table 8-1.

8.1.1.2 Industrial Boiler. When a boiler is applied to control VOC, it is assumed the plant has an existing boiler which can be modified to accommodate the vent stream. Surveys of industrial boilers show that natural gas-fired watertube boilers are predominant in the chemical

TABLE 8-1. INCINERATOR GENERAL DESIGN SPECIFICATIONS[4,5]

| Item | Specification |
|---|---|
| Emission control efficiency | 98 percent destruction |
| Minimum incinerator volume[a] | 1.01 $m^3$ (35.7 $ft^3$) |
| Incineration temperature | |
| • low temperature incineration | 870°C (1600°F) |
| • high temperature incineration[b] | 1100°C (2000°F) |
| Furnace residence times | |
| • low temperature incineration | 0.75 sec |
| • high temperature incineration | 1.00 sec |
| Primary fuel requirement | Fuel required to maintain incinerator temperature with 18 percent excess air |
| Supplemental fuel requirement, (h = vent stream heating value in $MJ/nm^3$ (Btu/scf) | Required for flame stability |
| • $0 \leq h < 1.9$ $(0 \leq h < 50)$ | Add 0.38 $MJ/nm^3$ (10 Btu/scf) |
| • $1.9 \leq h < 3.7$ $(50 \leq h < 100)$ | Add 10 percent of stream heating value |
| • $h \geq 3.7$ $(h \geq 100)$ | No supplemental fuel required |
| Recuperative heat exchanger | Not applicable when vent stream heating value is sufficient to maintain design incinerator temperature |
| • overall heat transfer coefficient | 23 $W/m^2 \cdot °K$ (4.0 $Btu/hr \cdot ft^2 \cdot °F$) |
| Scrubber system | Used when corrosive VOC is present |
| • type | Packed tower |
| • packing height | 11.0 m (36.0 ft) |
| • liquid/gas ratio | 1337 $l/m^3$ (10 gal/scf) |
| • gas velocity | 0.9 m/s (3.0 ft/s) |
| • scrubber gas temperature | 100°C (212°F) |

[a] If calculated incinerator combustion chamber volume is less than 1.01 $m^3$ (35.7 $ft^3$), natural gas and air are added to maintain the design temperature and residence time for a 1.01 $m^3$ (35.7 $ft^3$) incinerator volume.

[b] Used when corrosive VOC are present due to the difficulty of achieving complete combustion of corrosive VOC at lower temperatures.

industry.[6] Therefore, this boiler type is assumed to be used for all vent streams where a boiler is applicable. The boiler modifications considered are based on combusting a 0.472 $nm^3/s$ (1000 scfm) vent stream in the industrial boiler specified in Table 8-2. This is the highest vent stream flowrate found in the screened NEP. Boiler modifications include increasing the induced draft fan size and replacement of the existing burner with one capable of burning a fuel and vent gas mixture. The modified equipment specifications are shown in Table 8-2. The burner specifications are based on the most expensive burner identified through vendor contacts and the fan size is based on the pressure drop associated with combusting the combined natural gas and vent stream gases.[7] A boiler equation was developed to predict the mass and energy transfer characteristics for the boiler selected. This model, which is based on a series of heat and mass transfer equations is used to predict the resultant steam production (energy credit) associated with combusting a vent stream containing VOC.

8.1.1.3 Flare. The flare design consists of an elevated, guy supported, steam assisted, smokeless flare. Published correlations relating vent stream flow, heating value, and composition to the flare height and tip diameter are used in the flare design.[8] The general design specifications used in developing these correlations are discussed below and presented in Table 8-3.

Flare height and tip diameter are the basic design parameters used to determine the installed capital cost of a flare. The tip diameter selected is a function of the combined vent stream and supplemental fuel flowrates, the combined gas temperature and molecular weight, and the maximum tip pressure drop assumed. Supplemental fuel requirements and tip pressure drop are shown in Table 8-3. Determination of flare height is based on worker safety requirements. The flare height is selected so the maximum ground level heat intensity is 3787 $W/m^2$ (1200 Btu/hr $ft^2$). Vendor contacts indicate that the smallest flare commercially available is thirty feet high and two inches in diameter.[8] For vent streams requiring smaller flare systems, this is the minimum flare size used.

TABLE 8-2. INDUSTRIAL BOILER GENERAL DESIGN SPECIFICATIONS[6,7]

| Item | Specification |
|---|---|
| Emission control efficiency | 98 percent destruction |
| Boiler type | Natural gas-fired, watertube boiler |
| Boiler heat output capacity | 10 MW ($35 \times 10^6$ Btu/hr) |
| Modified equipment specifications | |
| • burner type[a] | Low Btu gas vortex burner |
| • burner size | 10MW ($35 \times 10^6$ Btu/hr) |
| • fan blades | 91.4cm (36 inch) radial fan |
| • motor power[b] | 48 kW (65 brake h.p.) |
| • fan speed | 1200 rpm |
| Vent stream flowrate[c] | 0.472 $nm^3/s$ (1000 scfm) |
| Supplemental fuel requirement | From 0 to 10 percent of vent stream flow rate required to maintain flame stability. Absolute amount depends on vent stream heating value. |

[a]This burner would replace the existing natural gas burner.

[b]Without introduction of the vent stream to this boiler a 37.3 kW (50 bhp), 1000 rpm motor is required. The fan blade size is 88.9 cm (35 inch).

[c]Based on maximum vent stream flowrate found in the screened NEP.

TABLE 8-3. FLARE GENERAL DESIGN SPECIFICATIONS[3]

| Item | Specification |
|---|---|
| Emission control efficiency | 98 percent destruction |
| General flare design | Elevated, guy supported, steam assisted, smokeless flare |
| • minimum flare tip diameter | 5.1 cm (2.0 inch) |
| • minimum flare height | 9.0 m (30 ft) |
| • maximum ground level heat intensity | 3787 $W/m^2$ (1200 $Btu/hr \cdot ft^2$) |
| • flare tip pressure drop | 69 cm (27 inch) w.c. |
| • emissivity | 0.13 |
| • number of pilots | Number of pilots — Tip diameter cm (inch)<br>1 — $D \leq 20$ ($\leq 8$)<br>2 — $20 < D \leq 61$ ($8 < D \leq 24$)<br>3 — $61 < D \leq 107$ ($24 < D \leq 42$)<br>4 — $107 < D \leq 178$ ($42 < D \leq 70$)<br>5 — $D > 178$ ($D > 70$) |
| • pilot gas requirement | 2.26 $m^3/hr$ (80 scf/hr) of natural gas per pilot |
| • steam requirement | 0.4 kg/kg vent gas |
| • purge gas requirement[a] | 0.01 m/s (0.04 ft/s) gas velocity at tip |
| Supplemental fuel requirement | Natural gas required to maintain vent stream heating value of 5.6 $MJ/nm^3$ (150 Btu/scf) for flame stability |

[a]Natural gas used to purge system.

The natural gas required for pilots and purge, and the mass flow of steam required are calculated after the flare height and tip diameter are determined. Pilot gas consumption is a function of the tip diameter as shown in Table 8-3. Based on the tip diameter, the number of pilots is selected and the pilot gas flowrate is calculated assuming a gas flow of 2.26 $m^3$/hr (80 scfh) per pilot. The purge gas requirement is also a function of the tip diameter, and the design purge gas velocity at the tip as shown in Table 8-3. Steam use is that flow which maintains a steam to flare gas ratio of 0.4 kg steam/kg vent gas.

8.1.1.4 Pipeline/Compressor System. The pipeline/compressor system described in this section is required for all combustion control systems considered in the regulatory analysis. The pipeline design, which is based on information supplied from chemical manufacturers, consists of two pipe legs. It is assumed that 21m (70 feet) of pipe are required to join a distillation unit with a compressor. The length of pipe from the compressor to the control device is assumed to be 600m (2000 feet) for boilers and flares, and 150m (500 feet) for incinerators. The number of valves, fittings, and other piping components are identified in Appendix F.

The diameter of pipe selected for each vent stream is calculated using economic pipe diameter equations published in the literature.[9] Once all diameters are selected, the pipeline system pressure drop is estimated and the compressor brake horsepower is determined. In the regulatory analysis, a separate header and compressor are provided for each individual vent stream at a specific plant. With respect to control costs, this is considered to be a conservative approach since in many cases more than one vent stream at a plant can be transported in a single pipeline/compressor system at a lower cost.

8.1.2 Capital Cost Bases

The capital cost for each combustion control system includes the purchase and installation of all equipment and piping systems necessary to control a vent stream from an individual distillation unit. Table 8-4 presents a summary of the equations used to estimate installed capital costs for new flares and incinerators. These equations were generated by using a

TABLE 8-4. CAPITAL COST EQUATIONS FOR NEW FLARES AND INCINERATORS

| Control Device | Item | Installed Capital Cost Equation (1978 $)[b] |
|---|---|---|
| Flare | Flare and auxiliaries | $0.895\ (23{,}086 + 193.6\ D^2 + 5.7H^2)^a$ |
| Incinerator | Combustion chamber (Incineration temperature of 1600°F) | $3.58\ (51{,}964 + 67.99\ V_{cc} - 0.0014\ V_{cc}^2)^a$ |
| | Combustion chamber (Incineration temperature of 2000°F) | $3.58\ (50{,}490 + 55.33\ V_{cc} - 0.0001\ V_{cc}^2)^a$ |
| | Recuperative heat exchanger | $2.28\ (18{,}574 + 33.61\ A_{he}^{0.9139})^a$ |
| | Quench/scrubber | $0.895\ (180{,}139 + 54.99F - 0.00123F^2)^a$ |

[a] D = flare diameter (in.); H = flare height (ft); $V_{cc}$ = combustion chamber volume ($ft^3$); $A_{he}$ = heat exchanger surface area ($ft^2$); F = incinerator exit gas flow rate (scfm).

[b] Costs are changed from 1979 to 1978 dollars by using a ratio of fabricated equipment indices (References 11 and 12). Ratio = $\frac{\text{1978 indice}}{\text{1979 indice}} = \frac{244.0}{272.7} = 0.895$

linear regression analysis of cost curves presented by IT Enviroscience.[10] Boilers are assumed to have a constant capital cost for modification when they are applied to any vent stream. Pipeline system costs are a summation of many individual component costs (i.e., pipes, fittings, valves, compressors).

The capital cost bases for incinerators, boilers, flares, and pipeline/compressor systems are discussed in the following sections. All capital costs and cost equations are adjusted from December 1979 to December 1978 dollars using the Fabricated Equipment Indices published in The Chemical Engineering Economic Indicators.[11,12]

8.1.2.1 Thermal Incinerator. Capital costs for the thermal incinerator are based on cost curves developed by IT Enviroscience.[10] Individual cost equations for the incinerator combustion chamber, recuperative heat exchanger and scrubber are based on a linear regression analysis of these cost curves.

The incinerator cost equations provide a relationship between equipment cost and combustion chamber volume for two incineration temperatures. The high temperature equation (2000°F) is used when corrosive VOC are present in the vent stream while the low temperature equation (1600°F) is used in the absence of corrosive VOC. In addition to the cost of the chamber itself, the equation also accounts for the cost of fans, ducts, and stack. A modified Lang factor of 4.0 is applied to the combustion chamber capital cost equation to account for such installation cost factors as foundation, insulation, erection, instruments, painting, electrical, fire protection, engineering, freight and taxes.[13]

When a recuperative heat exchanger is included in the incinerator system (see Section 8.1.1.1 for applicability), the equipment cost is obtained as a function of the total heat exchanger surface area. Determination of the surface area is discussed in Section 8.1.1.1. A modified Lang factor of 2.6 is used to estimate installation costs.[13] The installation components considered are the same as those identified for the combustion chamber with the exception of fire protection.

It is assumed that halogenated or corrosive streams require the use of a quench/scrubber system after the incinerator to remove these corrosive products of combustion. The capital cost of this system is determined as a function of the total incinerator exit gas flowrate. The cost equation is based on a linear regression analysis of the cost curves presented by IT Enviroscience in a report on thermal oxidizers.[14] The total installed capital cost of the incinerator system is the summation of the combustion chamber, heat exchanger, quench/scrubber, and pipeline/compressor costs.

8.1.2.2 Industrial Boiler. The installed capital cost associated with using a boiler for VOC control consists of the costs for the burner and fan modifications discussed in Section 8.1.1.2, and the pipeline/compressor system. The costs for boiler modification were obtained from vendor contacts for the size and design of the boiler selected.[8] Since burner and fan substitution is being considered, the modification costs are assumed to be the incremental cost of the new equipment over a conventional burner and fan. The estimated total installed capital cost associated with modifying the boiler is $10,000 (1978 dollars).[8]

8.1.2.3 Flare. The capital cost of a flare is based on IT Enviroscience data and vendor supplied information. Enviroscience data provides the total installed capital cost of a flare as a function of flare height and tip diameter for systems designed to burn propylene.[15] The vendor data provides installed capital costs, flare height, and tip diameter for flares combusting eight different VOC's. A cost equation was developed from a linear regression analysis of the combined data set. This equation yields the total installed capital cost of a flare as a function of height and tip diameter. The installed capital cost of a new flare system is the sum of the cost determined from this equation and the cost of the pipeline/compressor transport system. The installed capital cost of an existing flare is simply that cost associated with the pipeline/compressor system.

8.1.2.4 Pipeline/Compressor System. The pipeline capital costs include the equipment and installation cost of pipes, fittings, and compressors necessary to transport the vent stream from its source to the control device. The purchase cost for sizes of pipe and fittings

commercially available are obtained from The Richardson Rapid System Process Plant Construction Cost Estimating Standards.[16] Compressor costs are determined from vendor supplied capital cost data and are specified as a function of compressor brake horsepower.[17]

8.1.3 Annualized Cost Bases

The annualized costs include direct operating and maintenance costs, and annualized capital charges. The assumptions used to determine annualized costs are presented in Table 8-5, and are given in 1978 dollars. Direct operating and maintenance costs include operating and maintenance labor, replacement parts, utility use, fuel consumption, and caustic use.[18] Utility requirements include electricity for fans, pumps and compressors, steam for flare operation, and make-up water for quench system operation. Supplemental natural gas is required to increase the heating value of vent streams, to maintain pilot flames, and to purge flare systems. Caustic is required to neutralize acidic scrubber water. Direct operating and maintenance costs are determined from the design specifications developed for each distillation vent stream and the annual cost factors presented in Table 8-5. Capital charges include annualized equipment costs, indirect costs for overhead, taxes, insurance, administration and capital recovery.[19] A ten year life is assumed for all combustion systems while capital recovery is based on a 10 percent capital charge taken over the 10 year life span of the equipment. The assumptions used for capital charges are shown in Table 8-5.

To account for reduced production levels and downtime an annual capacity utilization factor of 77 percent is used. This translates into an annual operating level of 6745 hrs/yr.

8.1.4 Comparison of Control System Costs

This section presents and discusses the capital costs, annualized costs, and average cost effectiveness for boilers, new flares, existing flares, and incinerators. These costs are determined by applying the costing methodology developed in the previous sections, to individual distillation vent streams characterized in the screened NEP.

TABLE 8-5. BASES FOR ANNUALIZED CONTROL SYSTEM COSTS

| | |
|---|---|
| **Direct Operating Cost Factors** | |
| Hours of operation (hrs/yr)[a] | 6745 |
| Maintenance as a percent of total installed capital cost (includes labor and replacement parts)[b] | 6 |
| Operating labor cost (1978 $/hr) (including overhead)[b] | 13.08 |
| Operating labor (manhours)[b] | |
| Incinerator | 1200 |
| Incinerator with heat exchanger | 1500 |
| Incinerator with scrubber | 2400 |
| Industrial boiler | 730 |
| Flare | 620 |
| Pipeline/compressor | 0 |
| Utilities and Reagents[b] (1978 $) | |
| Electricity ($/1000 kWh) | 49 |
| Natural Gas ($/$10^6$ Btu) | 5.03 |
| Quench and scrubbing water ($/1000 gal) | 0.22 |
| Steam ($/1000 lb) | 5.90 |
| Caustic ($/1000 lb) | 43.60 |
| **Capital Charges[c]** | |
| Equipment life (years) | 10 |
| Interest rate (percent)[d] | 10 |
| Capital recovery factor (percent of total installed cost)[e] | 16.27 |
| Taxes, insurance, administration (percent of total installed cost) | 5 |

[a] Reference 20.

[b] Reference 18.

[c] Reference 19.

[d] Before tax interest rate shown. After tax rate = 8.5 percent.

[e] Capital recovery factor = $\frac{i\,(1+i)^n}{(1+i)^n - 1}$ = 0.1627 (before taxes).

n = equipment life (10)
i = interest rate (0.1)

For a specific control system, capital and annualized costs show a wide variation with varying vent stream flowrate and heating value. Therefore, five vent streams or cases are selected for analysis which allow the comparison of control system costs over a wide range of vent stream heating values and flowrates.

Case 1 - Low flowrate, high heating value
Case 2 - Low flowrate, low heating value
Case 3 - High flowrate, high heating value
Case 4 - High flowrate, low heating value
Case 5 - Average flowrate and heating value

Table 8-6 presents the capital costs, annualized costs, average cost effectiveness, energy use, and vent stream characteristics for the five cases selected. All vent stream characteristics used are from individual distillation units in the screened NEP. The heating value and flowrate used to represent the average case are typical of the average vent stream characteristics defined in Chapter 3. It should be noted that vent streams free of corrosive compounds are used so that incinerators, boilers, and flares are applicable to each stream.

Table 8-6 shows that average cost effectiveness for each control system varies depending on the vent stream characteristics applied. The most favorable cost effectiveness values shown occur for vent streams with the highest overall energy flow (i.e., Btu/hr) (Case 5, Case 3). For example, the average cost effectiveness for Case 3 ranges from a cost savings of 116 dollars/ton of VOC destroyed for boilers to a cost of 15 dollars/ton for incinerators. In general, the favorable cost effectiveness values shown for high energy content vent streams are a result of the large mass of VOC available for destruction and low supplemental fuel costs (high heat content streams require little or no supplemental fuel). The cost savings for boilers are a result of the fuel savings associated with the heat recovered from the vent streams. Table 8-6 also shows the highest cost values occur for vent streams with low energy flows (Case 1, Case 2). For Case 2, average cost effectiveness ranges from 32,000 dollars/ton for existing

TABLE 8-6. COST COMPARISONS FOR CONTROL OF INDIVIDUAL DISTILLATION VENT STREAMS LISTED IN THE NEP

| Item | Case 1<br>Low Flowrate<br>High Heat Value | Case 2<br>Low Flowrate<br>Low Heat Value | Case 3<br>High Flowrate<br>High Heat Value | Case 4<br>High Flowrate<br>Low Heat Value | Case 5<br>Average Flowrate<br>Average Heat Value |
|---|---|---|---|---|---|
| Annualized Cost (1978 $/yr) | | | | | |
| Boiler | 16,800 | 17,000 | (1,405,200)[a] | 33,200 | (18,200)[a] |
| Flare | 21,400 | 25,200 | 94,400 | 306,000 | 24,900 |
| Incinerator | 128,100 | 137,700 | 178,000 | 156,800 | 112,100 |
| Existing Flare | 10,300 | 1,384 | 53,400 | 285,800 | 12,400 |
| Capital Cost (1978 $) | | | | | |
| Boiler | 21,300 | 22,000 | 66,900 | 68,800 | 23,100 |
| Flare | 37,300 | 37,900 | 82,900 | 85,200 | 39,000 |
| Incinerator | 250,800 | 251,900 | 528,900 | 348,900 | 253,900 |
| Existing Flare | 6,300 | 6,500 | 27,000 | 28,000 | 6,900 |
| Average Cost Effectiveness ($/ton) | | | | | |
| Boiler | 339 | 39,560 | (116)[a] | 82 | (67)[a] |
| Flare | 431 | 58,647 | 8 | 753 | 92 |
| Incinerator | 2,584 | 318,371 | 15 | 386 | 424 |
| Existing Flare | 208 | 32,215 | 4 | 703 | 46 |
| Supplemental Natural Gas Required (scfh) | | | | | |
| Boiler | 0 | 0 | (44,018)[b] | 0 | (1,100)[b] |
| Flare | 80 | 178 | 80 | 6,756 | 80 |
| Incinerator | 1,340 | 1,626 | 368 | 1,189 | 821 |
| Existing Flare | 0 | 98 | 0 | 6,676 | 0 |
| Vent Stream Characteristics | | | | | |
| Flowrate (scfm) | 1.2 | 8.3 | 560 | 637 | 26 |
| Heating valve (Btu/scf) | 3,643 | 3.0 | 1,258 | 19 | 494 |
| VOC flowrate (lb/hr) | 15.0 | 0.13 | 3,668 | 123 | 82 |

[a]Parenthesis indicate a net cost savings resulting from decreased requirements for natural gas to the boiler.

[b]Parenthesis indicate natural gas savings.

flares to 318,000 dollars/ton for incinerators. As discussed in the following sections, application of controls to these low heat content streams results in relatively high costs. In addition, a relatively small amount of VOC are controlled because of the low VOC content and/or low flowrates associated with these vent streams.

A comparison of capital costs is not discussed here because to do so without including the cost impacts for energy consumption would be misleading. For example, existing flares have the lowest capital costs for all cases considered but have the lowest annualized costs for only two cases. This is a direct result of the energy costs associated with the fuel required for stable flare operation. Because of the effect of energy consumption on annualized costs, comparison of control system costs are presented on an annualized basis only.

Figure 8-1 illustrates the total annualized control costs for the five cases selected. In general, the figure shows that existing flares have the lowest annualized costs when applied to vent streams with low flowrates (Cases 1 and 2) while boilers have the lowest annualized costs when applied to vent streams with high flow rates (Cases 3 and 4). In addition, incinerator systems have the highest annualized control costs for all cases except Case 4. This figure also shows that for vent streams with high energy content (Case 3, Case 5), the use of boilers generates a cost savings as a result of the energy recovery associated with combusting the vent stream. In both cases, these cost savings are more than sufficient to off-set the capital cost of the boiler modifications applied.

The following is a case-by-case comparison and discussion of the annualized control system costs. Those cases that have similar cost trends are grouped together.

Cases 1 and 2. Both cases are characterized by vent streams with low flowrates. Figure 8-1 shows that for both cases existing flares have the lowest annualized costs followed by boilers, new flares and incinerators. The relatively low annualized cost for existing flares is attributed to the low equipment costs associated with the use of an existing flare system. In

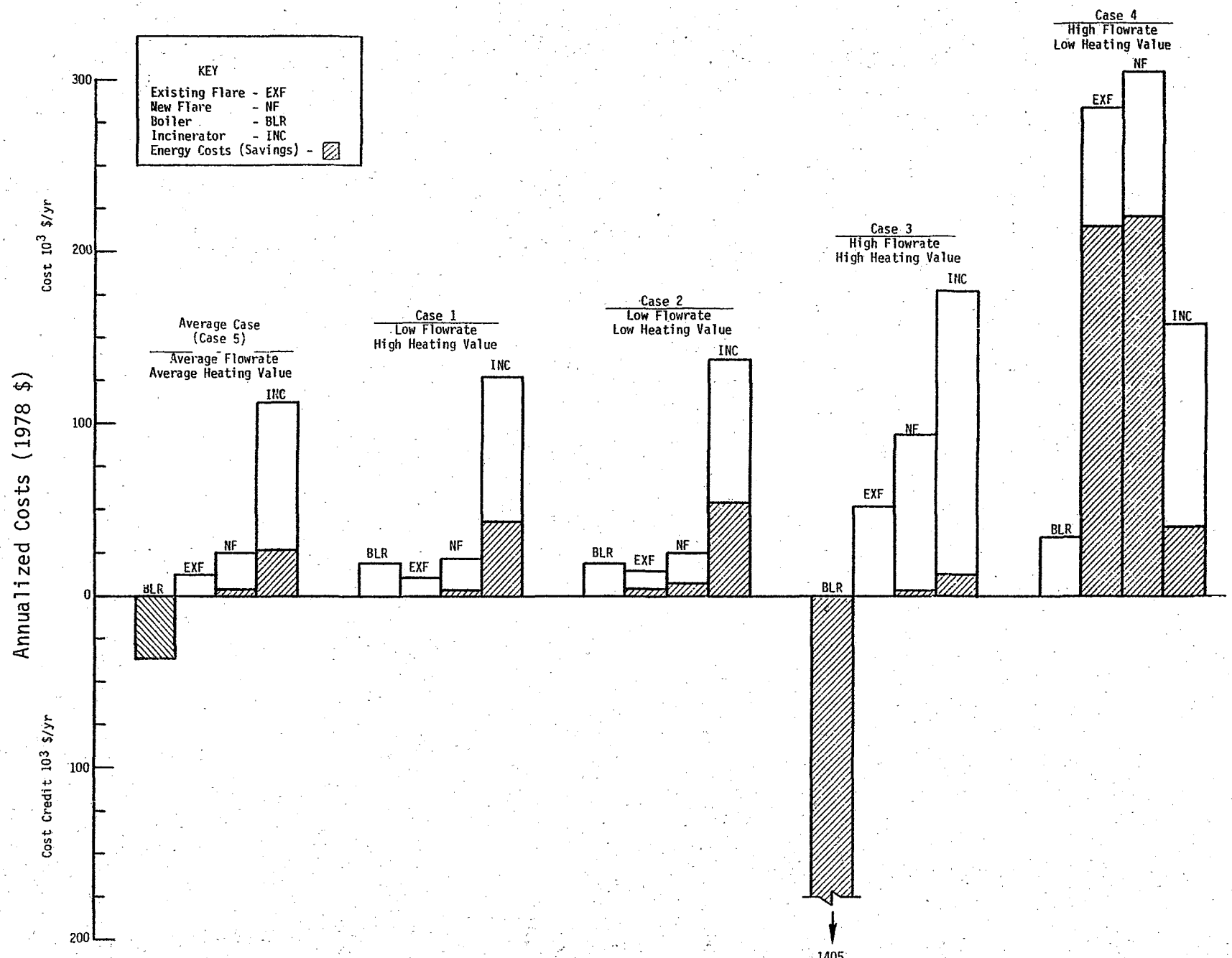


Figure 8-1. Summary of annualized control system cost for the 5 individual vent streams Cases selected.

addition, minimum flowrates of supplemental fuel are required as a result of the low overall flowrates for these vent streams.

As shown in Figure 8-1, the incinerator system has the highest annualized cost for Cases 1 and 2. These relatively high costs are attributed to the high equipment costs and supplemental fuel consumption for incinerators applied to low flowrate vent streams. For both of these low flowrate cases, an oversized incinerator is applied (see Section 8.1.1.1 for minimum incinerator size commercially available). Therefore, a large volume of supplemental fuel and air are required to generate sufficient flue gas for maintaining the design residence time of this oversized incinerator. As shown in Table 8-6, the supplemental fuel required for incinerator operation under Cases 1 and 2 ranges from 1340 to 1626 scfh. All other control systems use under 200 scfh.

Case 3, Case 5. Both Case 3 and Case 5 represent vent streams with high energy content. Therefore, little or no supplemental fuel is required for combusting these vent streams using the control systems considered. The use of boilers, which act to recover the vent stream heat content results in significant energy cost savings. These cost savings, which act to off-set the capital costs of boilers, are a result of the fuel savings associated with the heat recovered from these vent streams. As shown in Figure 8-1, the cost savings associated with using boilers range from 18,200 to 1,405,200 dollars.

For both cases, energy costs are low for existing flares, new flares and incinerators. The incinerator systems have the highest capital cost and they also have the highest annualized cost. Furthermore, existing flares have the lowest capital cost and they also have the lowest annualized cost. Annualized incinerator costs range from 112,000 to 178,000 dollars, while annualized costs for existing flares range from 12,400 to 53,300 dollars. The annualized costs for new flares lies between the costs for existing flares and incinerators.

Case 4. The comparative costs for Case 4 differ from all others in that new and existing flares have the highest annualized costs. For all other cases considered, the use of an incinerator system results in the

highest annualized cost. For Case 4, flares are more expensive than incinerators because of the higher heating value assumed to be necessary for flare operation as explained in the following discussion.

Figure 8-1 shows that the relatively high annualized cost of new and existing flares is a direct result of the high energy cost component. A high flowrate of supplemental fuel is required for flares because the vent stream flowrate is high and its corresponding heating value is low. Table 8-6 shows that over 6000 scfh of supplemental natural gas is required for flare systems while just over 1000 scfh is required for incinerator operation. This difference in fuel requirements drives the annualized cost of flares higher than incinerators, and is a result of the different incinerator and flare heating values required. The flare cost equations add enough fuel to reach a minimum heating value of 5.7 $MJ/nm^3$ (150 Btu/scf) while the incinerator equations add enough fuel to maintain a heating value of between 0.38 to 4.2 $MJ/nm^3$ (10 to 110 Btu/scf).

Figure 8-1 shows that boilers have the lowest annualized cost as a result of relatively low capital and energy costs. Although some supplemental fuel is required, there is no energy cost component shown in Figure 8-1 because the cost credit associated with combusting this vent stream acts to off-set the cost of the supplemental fuel required.

## 8.2 NATIONAL COST IMPACTS

The screened national emission profile (NEP) was used to develop a relationship between future national percentage VOC emission reductions and national VOC control costs due to a distillation NSPS. This relationship was developed as discussed below.

### 8.2.1 Determination of Cost Impacts

As described in greater detail in Chapter 6, an 81 percent VOC control level from distillation units would exist if no NSPS were promulgated. The available range of national VOC control for an NSPS is from requiring no additional units control to having all distillation units control their emissions. Regulatory possibilities in this range are modeled by adding controls to uncontrolled units in the screened NEP.

In brief, the sequence is established by ranking individually all the units in the NEP according to the total resources required for VOC control (expressed in $/Mg of VOC controlled). Therefore, regulatory alternatives consist of a set of $/Mg cutoff levels or TRE levels (as explained in Chapter 6). For a given regulatory alternative there is an associated TRE cutoff level; all units in the NEP ranked at or below the cutoff level must be controlled (unless they are already controlled with combustion devices) while those above the cutoff level are not controlled. To get the total cost impact of a regulation alternative (i.e., TRE cutoff level), the costs for all the affected units in the screened NEP are added. To get the associated national VOC emission reductions, the reductions for each vent stream are added assuming a 98 percent destruction efficiency.[21]

An incinerator system is applied to all vent streams containing corrosive VOC while new and existing flare systems are assumed to be applied to all others. Existing flares are applied when the data in the screened NEP indicates a flare exists at the plant while new flares are applied to all cases where incinerators or existing flares are not applicable. Because the cost associated with the use of boilers is relatively low, boilers are assumed not to be applied to maintain a degree of conservatism in this national cost impact analysis. Section 8.1 shows that boilers are the least expensive control system for most applications and that use of boilers can actually result in significant cost savings. For plants in the screened NEP where more than one vent stream is controlled, it is assumed that each stream is combined for treatment in a single control system.

The summing of costs for a regulatory alternatives results in total costs for controlling the units in the screened NEP. To translate this number to a projection of costs for all new distillation columns expected by 1987, a factor is applied which is simply the ratio of new units expected by 1987 to the number of units in the screened NEP. That factor is 6.15 (1200/195).

### 8.2.2 Results of the Cost Analysis

The results for the flare/incinerator cost analysis for the complete range of regulatory possibilities are shown in Figure 8-2 for the fifth year

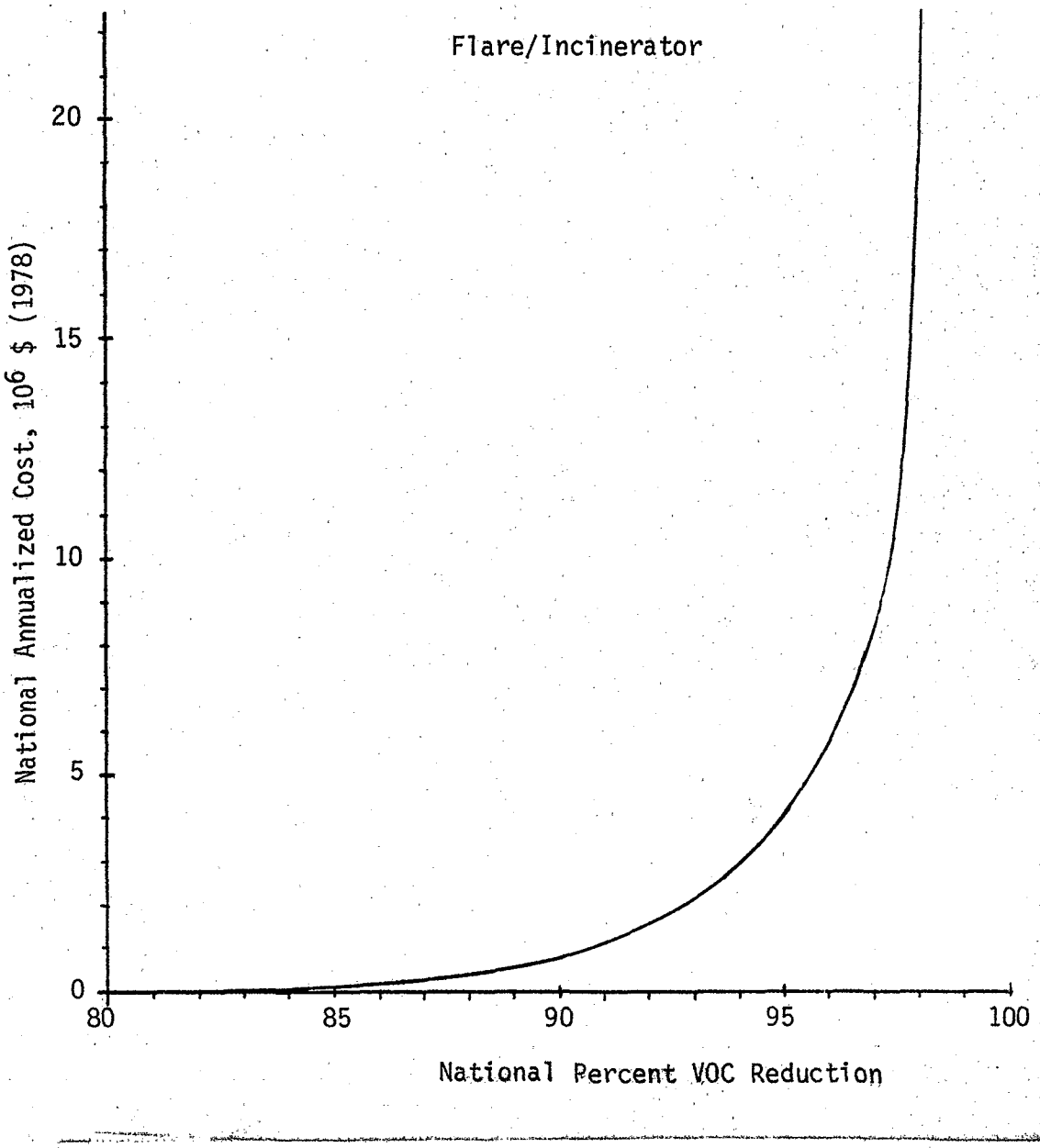


Figure 8-2. National annualized cost of combustion control using flare and incinerator costs as a function of the associated national percent reduction in uncontrolled VOC emissions from distillation operations - fifth year.

of NSPS implementation. The national control costs due to an NSPS for flares and incinerators range from zero dollars for an 81 percent emission reduction (baseline level) to about $23.0 million dollars for a 98 percent emission reduction. As shown in Figure 8-2, a steep slope is evident as the curve approaches a 95 percent reduction level. This occurs because many units with relatively high $/Mg values for controls are included in order to achieve this level of national emissions reduction.

It should be emphasized that the cost curve shown in Figure 8-2 is based on the application of flares and incinerators. If boilers and incinerators were applied, Figure 8-2 would indicate significant national cost credits as a result of the vent stream energy recovered through the use of boilers.[21]

### 8.2.3 Major Differences Between Cost Methodologies Used in The Regulatory And Economic Analyses

Although the same equipment cost equations (presented in Section 8.1) are used, the economic and regulatory analyses differ in control device selection and vent stream specifications. The economic analysis assumes the maximum number of distillation columns (13) in a process unit and the application of an incinerator/scrubber complex which in most cases results in the highest annualized control costs. The worst case vent stream characteristics (those resulting in the highest cost) are assumed for flowrate (52 $m^3$/min) and VOC concentration (no VOC content). Furthermore, no heat value is attributed to the vent stream (so that supplemental fuel requirements are maximized) and no recuperative heat recovery is assumed. Application of the most expensive control device and selection of the worst case vent stream characteristics adds a degree of conservatism to the cost estimates. On the other hand in order to determine the cost impacts associated with all applicable control devices, the regulatory analysis considers the use of boilers, flares or incinerators depending on their applicability to a particular vent stream. Furthermore, the vent stream characteristics are taken directly from the data presented in the screened NEP. This facilitates the analysis of a wide variety of cases and allows the estimated national cost impacts to be based on vent stream characteristics typically found in industry.

The costs presented for both the regulatory analysis and the economic screening analysis are in 1978 dollars. The costs for the economic screening analysis, however, have been adjusted to 1987, i.e., they are 1987 costs given in 1978 dollars. This transformation to 1987 costs was made using two factors. First, all costs, other than energy-related costs, were escalated to 1987 using the historical inflation rate. Second, the energy-related costs were escalated at a higher rate since these costs have been rising facter than inflation in the recent past.

## 8.3 OTHER COST CONSIDERATIONS

### 8.3.1 Control Cost Accumulation for Synthetic Organic Chemical Manufacturing Industries with Distillation Operations

8.3.1.1 Introduction. Since passage of the Clean Air Act Amendments of 1977, EPA has initiated action on eight possible new source performance and hazardous air pollutant standards that will affect the Synthetic Organic Chemical Manufacturing Industry (SOCMI). None has been promulgated. The fifth-year annualized cost of these potential regulations, taken together, and adjusted in the manner described below, sums to $31.1 million. Of this total, the potential NSPS for distillation comprises $9.6 million or 31 percent.

As the term is used here, the distillation industry consists of all facilities and activities directly involved in the operation of distillation columns used to produce any of 219 organic chemicals. The 219 chemicals are defined by a minimum national production threshold of 45,400 Mg/yr (100 million lb/yr) and account for approximately 92 percent by weight of total domestic organic chemical production. The scope of distillation NSPS does not include polymers, coal tar distillation products, chemicals extracted from natural sources, or chemicals totally produced by biological synthesis.

The purpose of this control cost accumulation section is to examine the incremental cost effect of NSPS for distillation for the SOCMI in the context of seven other air emission regulations. In some cases, costs of the potential standards for existing facilities are included in the accumulation even though most existing facilities will not be affected by

potential distillation NSPS in the first five years. Listed below are the relevant potential regulations for cumulative costs with corresponding Start Action Request (SAR) numbers:

- NESHAP: Benzene Emissions from Benzene Storage Tanks
  SAR No. 1593.
- NESHAP: Benzene Fugitive Emissions
  SAR No. 1126.
- NESHAP: Benzene Emissions from the Ethylbenzene/Styrene Industry
  SAR No. 1128.
- NESHAP: Benzene Emissions from the Maleic Anhydride Industry
  SAR No. 1127.
- NSPS: VOC Fugitive Emissions in Synthetic Organic Chemicals Manufacturing Industry
  SAR No. 1112.
- NSPS: VOC Emissions from Volatile Organic Liquid Storage Tanks
  SAR No. 1612.
- NSPS: VOC Emissions from Air Oxidation Process Vents in the Synthetic Organic Chemical Manufacturing Industry
  SAR No. 1618.
- NSPS: VOC Emissions from Distillation Process Vents in the Synthetic Organic Chemical Manufacturing Industry
  SAR No. 1733.

The basic methodology employed to generate cumulative annualized control costs is presented below:

1) All control costs are standardized to mid-1978 dollars.

2) All control costs are annualized using a real, before-tax interest rate of 10 percent.

3) Only the EPA Administrator's recommended regulatory alternative is considered when accumulating costs for existing (NESHAPs) and new, modified, or reconstructed (NESHAPs and NSPSs) facilities. Where a regulation is not in a late enough stage to have a regulatory alternative recommended, then a best estimate of which regulatory alternative may be chosen is made.

4) All control costs are incremental and do not include the cost of pollution control equipment already in place.

5) Costs are tabulated only for specific chemical groups that make up the distillation industry and are thus directly affected by the potential NSPS for distillation. Twelve groups are defined that experience control costs under the distillation standard: 1) General aromatics; 2) General non-aromatics; 3) Synthetic elastomers; 4) Plastics and fibers; 5) Plasticizers; 6) Pesticides; 7) Solvents; 8) Detergents and surfactants; 9) Fuel additives; 10) Aerosol propellants and refrigerants; 11) Coatings; and 12) Miscellaneous end-use chemicals. Section 9.1.1.8 of the BID categorizes the 219 organic chemicals by the above groups according to whether the chemicals are intermediates used in the production of the particular types of chemicals (groups 1-6), or are themselves members of the types (groups 7-12). Two groups found in Section 9.1.1.8, Basic chemicals and Dyes, have no control costs under NSPS for distillation and thus are not included when accumulating incremental annualized costs. Also, a few individual chemicals within the 12 groups listed above experience no direct annualized control cost and are excluded when accumulating costs.

6) For NESHAP regulations, control costs derived from model plants are multiplied by the number of existing facilities affected for each particular SOCMI standard.

7) Where future facilities are concerned (NESHAP and NSPS regulations), the fifth year total annualized control costs for new, modified, or reconstructed facilities are used for accumulation. The fifth year total annualized control costs refer to the control costs expected to be incurred by society in the fifth year following proposal of a standard in the Federal Register.

The fifth year costs are calculated by multiplying annualized control costs for one affected facility (in constant dollars) by the projected number of affected facilities to be built in the five years following proposal of the specific standard. The fifth year will vary among potential regulations because the dates of proposal in the Federal Register vary among potential regulations. The projected number of new facilities, affected by NSPS for distillation to be built between November 1, 1982 and

November 1, 1987 (see Table 9-23), is used to calculate fifth year control costs for all eight of the potential NESHAP and NSPS regulations even though the five year period used for distillation facility projections does not correspond exactly to five year periods of other regulations.

8) When costs are accumulated, a few individual chemical industries should be combined because of the existence of coproducts or by-products. However, due to the intricate nature of coproduct and by-product relationships within the SOCMI, the large number of chemicals affected, and the time and effort required to define these relationships, coproducts and by-products are treated as independent industries. Thus, some double counting exists when projecting the number of new facilities and, as a result, costs are somewhat overstated.

9) Table 8-7 lists costs for 12 chemical groups affected by the potential NSPS for distillation. Two chemical groups identified in Chapter 9, basic chemicals and dyes, do not experience any NSPS costs. Chemicals that are classified as basic chemicals are produced at refineries and have no projected compliance costs, while no new, modified, or reconstructed facilities are projected for dyes. Hence dyes do not experience any NSPS costs.

10) The costs provided in Table 8-7 are only the direct costs of the various SOCMI standards. At the end of this section rolled-through costs are addressed. Rolled-through costs are costs that a producer may incur if his supplier (of input chemicals) incurs costs due to standards and passes these through. A more complete discussion of rolled-through costs can be found in Section 9.2.

The data presented in Table 8-7 are not only based on the above general methodology but more specific assumptions as well. These regulation-specific assumptions are presented below.

8.3.1.2 Data and Assumptions for Accumulating Costs

8.3.1.2.1 Benzene storage NESHAP. Cost data are from the draft Environmental Impact Statement (EIS) titled "Benzene Emissions from Benzene Storage Tanks -- Background Information for Proposed Standards," December 1980, (EPA-450/3-80-034a). Page numbers referencing costs are from this EIS. Cost data in the EIS are in first quarter 1979 dollars.

TABLE 8-7. ANNUALIZED CONTROL COSTS OF EIGHT AIR STANDARDS FOR TWELVE CHEMICAL GROUPS
FIFTH YEAR AFTER PROPOSAL[a]
12 Chemical Groups
United States 1978
(Mid-1978 Dollars)

| Chemical group[b] | (A) Benzene storage NESHAP | (B) Benzene fugitive NESHAP | (C) Ethylbenzene/ styrene NESHAP | (D) Maleic anhydride NESHAP | (E) VOC fugitive emissions NSPS | (F) Volatile organic liquid storage Tanks NSPS | (G) Air oxidation processes NSPS | (H) Distillation columns NSPS | Total |
|---|---|---|---|---|---|---|---|---|---|
| Intermediates for: | | | | | | | | | |
| General aromatics | 241,500 | 459,600 | x | x | 331,000 | 68,700 | 165,000 | 326,400 | 1,592,200 |
| General non-aromatics | x | x | x | x | 1,497,000 | 310,600 | 737,000 | 2,246,400 | 4,791,000 |
| Synthetic elastomers | x | x | x | x | 245,400 | 50,900 | 407,000 | 489,600 | 1,192,900 |
| Plastics & fibers | 427,100 | 721,100 | (321,400) | 1,885,000 | 956,800 | 198,500 | 6,941,000 | 1,219,200 | 12,027,300 |
| Plasticizers | x | x | x | x | 356,000 | 73,900 | 2,750,000 | 422,400 | 3,602,300 |
| Pesticides | 76,600 | 145,100 | x | x | 98,100 | 20,300 | x | 316,800 | 656,900 |
| Solvents | x | x | x | x | 650,200 | 134,900 | x | 1,363,200 | 2,148,300 |
| Detergents and surfactants | 30,900 | 47,900 | x | x | 773,200 | 160,400 | x | 1,872,000 | 2,884,400 |
| Fuel additives | x | x | x | x | 86,200 | 17,900 | x | 124,800 | 228,900 |
| Aerosol propellants & refrigerants | x | x | x | x | 110,500 | 22,900 | x | 268,800 | 402,200 |
| Coatings | x | x | x | x | 171,700 | 35,600 | x | 211,200 | 418,500 |
| Miscellaneous end-use chemicals | x | x | x | x | 392,800 | 81,500 | x | 729,600 | 1,203,900 |
| | 776,100 | 1,373,700 | (321,400) | 1,885,000 | 5,668,300 | 1,176,000 | 11,000,000 | 9,590,400 | 31,148,800 |

[a]The fifth year varies among standards. See text.

[b]Twelve of the 14 chemical groups presented in Chapter 9 are listed. Refer to text for further explanation.

Note: 1) Derivation of each regulation's annualized control cost is provided in the following pages.
2) "X" denotes that these chemical industries are not covered by the particular standards.
3) Totals differ slightly from the sum of figures due to rounding.

The benzene storage NESHAP would directly affect 11 specific chemicals in 4 chemical groups that are benzene consumers and would be affected by NSPS for distillation (see Table 8-8).

EPA recommends regulatory alternative IV for existing sources (45 FR 83958) and regulatory alternative III for new sources (45 FR 83960). Alternative IV for existing sources and alternative III for new sources have the same requirements. Both alternatives require that each storage tank have a contact internal floating roof tank with a liquid-mounted primary seal and a continuous secondary seal.

The annualized cost to existing facilities affected by this standard is $6,800 (p. 7-46) for alternative IV. There are 25 existing benzene consumers in the general aromatics group, 52 in the plastics and fibers group, 8 in the pesticides group, and 4 in the detergents and surfactants group (see Table 8-8). Hence, the total annualized costs to existing facilities in each of the four groups are $170,000, $353,600, $54,400, and $27,700 respectively.

The annualized control cost for new benzene consuming facilities is $5,700 per facility (p. 7-54) for alternative III. According to Table 8-8, 16 new facilities consuming benzene are projected for the general aromatics group, 19 for the plastics and fibers group, 5 for the pesticides group, and 1 for the detergents and surfactants group. Hence, annualized benzene storage costs for future facilities are $91,200, $108,300, $28,500, and $5,700, respectively.

An aggregation of annualized control costs for existing and new sources computes to $261,200 for the general aromatics group, $461,900 for the plastics and fibers group, $82,900 for the pesticides group, and $33,400 for the detergents and surfactants group. The mid-1978 producer's price index is 209.6 and the first quarter 1979 producer's price index is 226.7. In mid-1978 dollars, the total annualized costs of control are therefore $241,500, $427,100, $76,600, and $30,900 for the general aromatics, plastics and fibers, pesticides, and detergents and surfactants groups, respectively.

TABLE 8-8. NUMBER OF BENZENE-CONSUMING PLANTS PROJECTED TO BE AFFECTED BY DISTILLATION NSPS, 1982-1987
United States

| Chemical group[a] | Projected benzene-consuming plants affected by Distillation NSPS[b] |
|---|---|
| General aromatics[c] | 16 |
| Plastics and fibers[d] | 19 |
| Pesticides[e] | 5 |
| Detergents and surfactants[f] | 1 |
| TOTAL | 41 |

[a]The list of 11 chemicals that use benzene as a raw material is taken from pp. 9-17 through 9-24 of the Benzene Fugitive Emissions BID and p. 7-10 of the Benzene Storage Tanks BID.

[b]The methodology for projecting affected chemical plants to be built between November 1982 and 1987 can be found in Section 9.1.2 of this BID.

[c]Includes benzene sulfonic acid, monochlorobenzene, and (1-methylethyl) benzene (commonly called cumene).

[d]Includes benzenamine (commonly called aniline), cyclohexane, ethylbenzene/styrene, 2,5-furandione (commonly called maleic anhydride), and nitrobenzene.

[e]Includes 1,1'-biphenyl.

[f]Includes linear alkylbenzene.

8.3.1.2.2 Benzene fugitives NESHAP. Cost data are from the draft EIS titled "Benzene Fugitive Emissions-Background Information for Proposed Standards," November 1980, (EPA-450/3-80-032a). Page numbers referencing costs are from this EIS. Cost data in the EIS are in May 1979 dollars.

The benzene fugitive NESHAP would directly affect 11 specific chemicals in 4 chemical groups that are benzene consumers and would be affected by NSPS for distillation (see Table 8-8). These industries experience fugitive benzene emissions.

EPA recommends regulatory alternative III for existing sources (46 FR 1175). Regulatory alternative III requires the installation of certain equipment and monthly monitoring for detection of leaks and is expected to reduce benzene fugitive emissions by about 70 percent. Regulatory alternative IV includes more equipment in addition to that required by regulatory alternative III and is expected to reduce benzene fugitive emissions by about 80 percent. EPA recommends that Alternative IV be imposed in the case of new sources (46 FR 1177). The annualized cost to existing facilities affected by this standard is $8,700 per facility when alternative III is imposed. This number is derived from the control costs for three different model facilities. The annualized cost of control for model facility A is $7,400, for model facility B, $9,700, and for model facility C, $15,200, (p. 8-35). It is estimated that 62 percent of existing refinery and SOCMI benzene-related production units would be represented by model A, 31 percent by model B, and 7 percent by model C (p. 6-3). The $8,700 per facility annualized cost is an average control cost for the three model facilities, weighted by the estimated current population of each model facility. There are 25 existing benzene consumers in the general aromatics group, 52 in the plastics and fibers group, 8 in the pesticides group, and 4 in the detergents and surfactants group (see Table 8-8 of this chapter). Hence, the total annualized costs to existing facilities in each of the four groups are $217,500; $452,400; $69,600; and $34,800, respectively.

The annualized control cost for new benzene consuming facilities is $18,200 per facility when alternative IV is imposed. This figure is based on the same model facilities used for existing sources. The annualized

cost of control for a new model facility A is $12,000, for new model facility B is $25,700, and for new model facility C is $39,900 (p. 8-36). Because it is expected that new facilities will follow the same distribution as the current population, the weighting procedure (i.e., model A-62 percent, model B-31 percent, model C-7 percent) is implemented to arrive at the composite cost. According to Table 8-8, 16 new facilities consuming benzene are projected for the general aromatics group, 19 for the plastics and fibers group, 5 for the pesticides group, and 1 for the detergents and surfactants group. Hence, annualized benzene fugitive costs for future facilities are $291,200, $345,800, $91,000 and $18,200, respectively.

Aggregate annualized control costs for existing and new sources compute to $508,700 for the general aromatics group, $798,200 for the plastics and fibers group, $160,600 for the pesticides group, and $53,000 for the surfactants group. The mid-1978 producer's price index is 209.6 and the May 1979 producer's price index is 232.0. In mid-1978 dollars the total annualized costs of control are $459,600, $721,100, $145,100, and $47,900 for the general aromatics, plastics and fibers, pesticides, and surfactants groups, respectively.

8.3.1.2.3 Ethylbenzene/styrene NESHAP. Cost data are from the draft EIS titled "Benzene Emissions from Ethylbenzene/Styrene Industry-Background Information for Proposed Standards," August 1980, (EPA-450/3-79-035a). Page numbers referencing costs are from this EIS. Cost data in the draft EIS are in fourth quarter 1978 dollars.

The ethylbenzene/styrene NESHAP would affect two chemical industries that fall under NSPS for distillation: ethylbenzene and styrene. The two chemicals are usually produced in conjunction with each other and are part of the plastics and fibers group.

EPA recommends regulatory alternative C for continuous emissions (45 FR 83456) and regulatory alternative 1 (45 FR 83457) for excess emissions. Alternative C requires that facilities achieve 99 percent benzene emissions reduction in the main process vents by routing them to a boiler. Alternative 1 requires the use of smokeless flares. Nine ethylbenzene/styrene facilities already have flares in place. With a present population

of 13 ethylbenzene and styrene facilities, four facilities would be required to install smokeless flares (45 FR 83456).

The annualized cost for the ethylbenzene/styrene industry to control continuous emissions is a $460,000 credit (p. 7-41). The analysis assumed that benzene is recovered in the condenser and scrubber system and is fed back into the process via the benzene drying column. The value of the benzene recovered is subtracted from the control cost. In this case the value of the benzene recovered is greater than the control cost. The annualized cost of controlling industry-wide excess emissions is $171,000 (45 FR 83456). Adding the $171,000 cost (excess emissions) to the $460,000 credit (continuous emissions) results in a $289,000 credit for all existing ethylbenzene/styrene facilities.

The EIS did not project any new ethylbenzene/styrene facilities, so that costs were not derived for new sources. It is assumed that new sources producing ethylbenzene/styrene will experience a proportion of the $289,000 annualized control credit. In Table 8-8, two ethylbenzene/styrene facilities are projected to be constructed. The total annualized cost of control for new ethylbenzene/styrene sources is a $44,500 credit (number of new plants divided by the number of existing plants times $289,000).

Aggregate annualized control costs for existing and new sources compute to a $333,500 credit for the ethylbenzene/styrene industry. The mid-1978 producer's price index is 209.6 and the fourth quarter 1978 producer's price index is 217.5. In mid-1978 dollars the total annualized cost of control for the plastics and fibers group is a $321,400 credit.

8.3.1.2.4 Maleic anhydride NESHAP. Cost data are from the draft EIS titled "Benzene Emissions from the Maleic Anhydride Industry-Background Information for Proposed Standards;" February 1980; (EPA-450/3-80-001a). Page numbers referencing costs are from this EIS. Cost data in the EIS are in second quarter 1979 dollars.

This regulation would affect only the maleic anhydride industry, which is in the plastics and fibers group. EPA Recommends a 97 percent efficiency control option for existing sources (42 FR 26660). This option is based on the best demonstrated level of control that is now being achieved

at an existing maleic anhydride plant and that is universally applicable to any existing plant. For the 97 percent regulatory option, the total annualized control costs would be approximately $2,100,000 for the existing maleic anhydride industry (p. 5-63). The mid-1978 producer's price index is 209.6 and the second quarter 1979 producer's price index is 233.5. In mid-1978 dollars the total annualized cost of control is $1,885,000 for the plastics and fibers group.

There are no control costs associated with new sources. Maleic anhydride can be produced using either benzene or n-butane as a feedstock. Because of the cost advantage associated with using the n-butane feedstock, maleic anhydride manufacturers are likely to decide to use the n-butane process for new sources. Benzene emissions from new maleic anhydride sources are thus likely to be zero.

8.3.1.2.5 VOC fugitive emissions NSPS. Cost data are from the draft EIS titled "VOC Fugitive Emissions in Synthetic Organic Chemicals Manufacturing Industry - Background Information for Proposed Standards, November 1980, (EPA-450/3-80-033a). Page numbers referencing costs are from this EIS. Cost data in the EIS are in fourth quarter 1978 dollars. The VOC fugitive emissions NSPS would affect all SOCMI chemicals that are affected by NSPS for distillation.

EPA recommends regulatory alternative IV (46 FR 1136). Alternative IV requires:

1) The monthly monitoring of all in-line valves and open-ended valves in gas and light liquid service,

2) the installation of rupture disks upstream of gas service relief valves that vent to the atmosphere,

3) the installation of closed vents and control devices for compressor seal areas and/or degassing vents from compressor barrier fluid reservoirs,

4) the installation of dual mechanical seals on pumps in light liquid service and installation of closed vent control devices for degassing vents from barrier fluid reservoirs of all pumps in light liquid service,

5) the installation of closed-loop sampling systems; and

6) the installation of caps, blinds, plugs, or second valves to seal all open-ended lines.

The annualized cost of this standard is $13,500 per facility if alternative IV is used. This figure is derived from the control costs for three different model facilities. The annualized cost of control for model facility A is $7,900, for model facility B, $13,300, and for model facility C, $33,000 (pp. 8-14 thru 8-16). The EIS estimates that 52 percent of existing SOCMI plants are similar to model facility A, 33 percent are similar to B, and 15 percent are similar to C (p. 6-2). It is assumed that this distribution will hold for the future SOCMI facility population. The $13,400 per facility annualized cost is an average control for the three model facilities, weighted by the estimated current SOCMI population of each model facility.

To arrive at specific chemical group costs, the $13,400 per facility annualized control cost is multiplied by the projected number of new sources for each chemical group (refer to Table 9-23 for projections). All costs are multiplied by 209.6/217.5, the ratio of the mid-1978 producer's price index to the fourth quarter 1978 producer's price index, in order to put all costs in mid-1978 dollars.

8.3.1.2.6 Volatile organic liquid storage tanks NSPS. Background data are from the unpublished draft EIS titled "VOC Emissions from Volatile Organic Liquid Storage Tanks-Background Information for Proposed Standards," June 1983, (EPA-450/3-81-003a). Control costs are in 1982 dollars. Volatile organic liquid storage tanks NSPS would affect all SOCMI chemicals that are produced using distillation.

It is assumed here that costs are incurred under regulatory alternative IV. This option would require that each storage vessel storing a VOL with a true vapor pressure less than 76.6 kPa be equipped with a contact internal floating roof with a liquid-mounted primary seal and a continuous secondary seal. A vapor control system would be required for all storage vessels storing a VOL with a true vapor pressure greater than or equal to 76.6 kPa. Small and low-pressure tanks are assumed to not need emissions controls in this analysis.

The total annualized cost of regulatory alternative IV for all of the SOCMI in 1988 (the fifth year of the standards) is assumed to be $1,680,000. In order to obtain specific chemical industry costs the $1,680,000 figure is split equally among the 439 new and replacement plants projected for the chemical groups listed in Table 8-7. (Refer to Table 9-23 for the projections.) This yields a cost of $3,800 per source. To a small extent, VOL storage costs are overstated in this cumulative cost analysis because some of the $1,680,000 cost would be incurred by chemicals not covered by Distillation NSPS.

To arrive at specific chemical group costs, the $3,800 cost is multiplied by the projected number of new sources for each chemical group. All costs are multiplied by 209.6/299.3, the ratio of the mid-1978 producer's price index to mid-1982 dollars, in order to put all costs in mid-1978 dollars.

8.3.1.2.7 Air oxidation processes NSPS. Cost data are obtained from the draft Environmental Impact Statement (EIS) titled Air Oxidation Processes in Synthetic Organic Chemical Manufacturing Industry-Background Information for Proposed Standards," January 1982, (EPA-450/3-82-001a). Page numbers referencing costs are from this EIS. Cost data in this document are in mid-1978 dollars. Preliminary indications are that regulatory alternative III will be the preferred course of action. This alternative requires a 57 percent national VOC reduction from the baseline level based on the use of a thermal oxidizer at those air oxidation facilities required to meet a 98 percent VOC reduction requirement.

The national annualized cost is estimated to be $11,000,000 when regulatory alternative III is chosen (p. 8-29). It is not possible to determine which specific chemical types produced at future air oxidation facilities would be required to control VOC emissions to achieve the national emission reduction under regulatory alternative III. In order to accumulate costs on an individual industry basis, it is assumed that the $11,000,000 total annualized cost will be based on a specific chemical industry's individual plant costs and projected number of new sources. The EIS provides the projected number of new AO facilities (p. 9-47, Scenario I)

and gives chemical process-specific costs (p. 8-44). For each industry the projected number of new facilities is multiplied by each chemical industry's specific cost. The products are summed to arrive at a total cost for all industries. Next, the percentage of the total cost attributable to each specific industry is calculated and the $11,000,000 national annualized cost of control is distributed to each chemical specific industry based on these percentages. Table 8-9 presents the calculations and results. To a small extent, AO costs are overstated in this cumulative cost analysis because some of the $11,000,000 cost would be incurred by chemicals not covered by Distillation NSPS.

8.3.1.2.8 NSPS for distillation. Cost data are obtained from Chapter 8 of this document. These cost data are based on a mix of worst-case assumptions and most-likely assumptions, and are in mid-1978 dollars. NSPS for distillation would affect 219 SOCMI chemicals. The most-likely total national annualized cost is $9.6 million, if a 98 percent VOC reduction is sought.

The worst-case cost for each of the 219 chemicals affected by the distillation NSPS is selected. The chemicals with worst-case costs (per facility) are placed in their proper chemical group. Within each group the worst-case costs per chemical facility are summed and then divided by the number of chemicals in each group to determine the average worst-case cost per facility for each chemical group (using a straight, unweighted average among the chemicals in each group). In order to accumulate costs on a chemical group basis, it is assumed that the $9.6 million estimated total annualized cost will be shared based on the chemical group's average worst-case cost per facility and the projected number of new sources. For each chemical group the projected number of new facilities is multiplied by each chemical group's average worst-case cost per facility. Next, the percentage of the total cost attributable to each specific chemical group is calculated and the $9.6 million national annualized cost of control is distributed to each chemical group based on these percentages. Table 8-10 presents the calculations and results.

# TABLE 8-9. FIFTH YEAR ANNUALIZED COSTS OF THE NSPS FOR AIR OXIDATION PROCESSES, BY SPECIFIC INDUSTRY: 26 CHEMICAL INDUSTRIES United States 1978

| Chemical[a] | (A) Projected number of AO facilities | (B) Annualized chemical process-specific costs ($000) | (C) Total projected cost per industry: AxB ($000) | (D) Share of all industry's cost: AxB÷ summary of column (C) | (E) Alternative III costs per industry: Column D multiplied by $11,000,000 | (F) Chemical group | (G) Chemical's scientific name[b] |
|---|---|---|---|---|---|---|---|
| Acetaldehyde | 0 | 2,083 | 0 | 0.000 | 0 | General non-aromatics | Acetaldehyde |
| Acetic acid<br>Butyric acid<br>Formic acid<br>Methyl ethyl ketone<br>Propanoic acid | 2 | 2,196[c] | 4,392 | 0.184 | 2,024,000 | Plastics and fibers | Acetic acid |
| Acetone<br>Acetophenone<br>Cumene hydroperoxide<br>a-Methyl styrene<br>Phenol | 4 | 240 | 960 | 0.040 | 440,000 | General non-aromatics | 2-Propanone |
| Acrylic acid<br>Acrolein | 1 | 1,661 | 1,661 | 0.069 | 759,000 | Plastics and fibers | 2-Propenoic acid |
| Benzoic acid | 3 | 122 | 366 | 0.015 | 165,000 | General aromatics | Benzoic acid |
| 1,3-Butadiene | 1 | 895 | 895 | 0.037 | 407,000 | Synthetic elastomers | 1,3-Butadiene |
| Ethylene dichloride | 2 | -16 | -32 | 0.000 | 0 | Solvents | 1,2-Dichloroethane |
| Ethylene oxide | 1 | 581 | 581 | 0.024 | 264,000 | General non-aromatics | Oxirane |
| Formaldehyde | 19 | 35[d] | 665 | 0.028 | 308,000 | Plastics and fibers | Formaldehyde |
| Hydrogen cyanide | 4 | 20 | 80 | 0.003 | 33,000 | General non-aromatics | Hydrocyanic acid |
| Isophthalic acid | 1 | 1,658 | 1,658 | 0.069 | 759,000 | Plasticizers | 1,3-Benzenedicarboxylic acid |
| Maleic anhydride | 6 | 590[e] | 3,540 | 0.148 | 1,628,000 | Plasticizers and fibers | 2,5-Furandione |
| Phthalic anhydride | 3 | 713[f] | 2,139 | 0.089 | 979,000 | Plasticizers | 1,3-Isobenzofurandione |
| Propylene oxide<br>Styrene | 1 | 4,816 | 4,816 | 0.202 | 2,222,000 | Plasticizers and fibers | Methyloxirane |
| Terephthalic acid,<br>Dimethyl terephthalate | 1 | 2,213 | 2,213 | 0.092 | 1,012,000 | Plasticizers | 1,4-Benzenedicarboxylic acid, and 1,4-Benzenedicarboxylic acid dimethyl ester |
| TOTAL | | | 23,934 | 1.000 | 11,000,000 | | |

[a] Indented chemicals are coproducts or by-products and are not assigned control costs. The primary product assumes the total costs of control for the particular process. Air oxidation chemicals not listed have no control costs because no new facilities are projected to be built.

[b] The chemicals' scientific names are used throughout this BID whereas in the air oxidation processes NSPS the common nomenclature for chemicals is used. The scientific names are defined by Chemical Abstracts Service. Column G gives the scientific name for the primary common-named chemical. Some chemicals have identical common and scientific names.

[c] The number is based on the assumption that one acetic acid projected facility will use the Wacker process and the other the n-butane process.

[d] The number is based on the assumption that 12 of the projected formaldehyde facilities will use a crystalline silver catalyst, methanol, and air in the air oxidation process and 7 will use a mixed metal catalyst, methanol, and air in the air oxidation process.

[e] The number is based on the assumption that all future maleic anhydride facilities will use n-butane as a feedstock.

[f] The number is based on the assumption that two of the projected phthalic anhydride facilities will use xylene as a feedstock and one will use naphthalene as a feedstock.

NOTE: These assumptions are based on current facility distributions or future known trends.

TABLE 8-10. FIFTH YEAR ANNUALIZED COSTS OF THE DISTILLATION NSPS BY SPECIFIC CHEMICAL GROUPS
14 Chemical Groups
United States
1978

| Chemical group | (A) Projected number of facilities[a] | (B) Average group control cost[b] ($) | (C) Total projected cost per group: (AxB) ($1000) | (D) Share of total cost AxB ÷ sum of column C | (E) Costs per group: column D multiplied by $9,600,000 |
|---|---|---|---|---|---|
| Basic Chemicals | 166 | 0 | 0 | .000 | 0 |
| Intermediates for: | | | | | |
| General aromatics | 21 | 255,255 | 5,360.4 | .034 | 326,400 |
| General non-aromatics | 113 | 324,919 | 36,715.8 | .234 | 2,456,000 |
| Synthetic elastomers | 17 | 473,727 | 8,053.4 | .051 | 489,600 |
| Plastics and fibers | 73 | 273,198 | 19,943.5 | .127 | 1,219,200 |
| Plasticizers | 24 | 289,681 | 6,952.3 | .044 | 422,400 |
| Pesticides | 8 | 650,000 | 5,200.0 | .033 | 316,800 |
| Dyes | 0 | 695,650 | 0 | .000 | 0 |
| Solvents | 50 | 447,662 | 22,383.1 | .142 | 1,363,200 |
| Detergents and surfactants | 72 | 425,395 | 30,628.4 | .195 | 1,872,000 |
| Fuel additives | 5 | 406,425 | 2,032.1 | .013 | 96,000 |
| Aerosol propellants and refrigerants | 11 | 403,517 | 4,438.7 | .028 | 268,800 |
| Coatings | 14 | 248,975 | 3,485.6 | .022 | 211,200 |
| Miscellaneous end-use chemicals | 31 | 384,517 | 11,920.0 | .076 | 729,600 |
| Total | | | 157,113.4 | 1.000 | 9,590,400 |

[a]See Section 9.1.3 and Table 9-23 of this BID.

[b]Using a straight average among chemicals in each group. Data for each chemical are presented in Appendix I.

8.3.1.3 Rolled-through costs. A chemical producer not only experiences the direct costs of control but also may incur costs indirectly as a result of increases in the price of regulated chemicals used as inputs. These costs are referred to as rolled-through costs because they may be "rolled" through the production chain, affecting intermediate chemicals and eventually end-products using the regulated chemical.

The analysis here assumes that all facilities -- existing as well as new -- are subject to the standards, and that producers of intermediates will roll through the entire cost of control to other SOCMI producers. Table 8-11 provides total annualized costs of control that producers in each chemical group may experience when rolled-through costs are added to direct costs. These figures allow for rolled-through costs of all eight air standards by scaling up the total direct costs for all standards by the ratio of rolled-through costs to direct costs determined in the screening program for distillation NSPS. The implications of the figures in Table 8-11 are that some producers in each group may experience costs higher than their own direct costs because of rolled-through costs from their suppliers, (as if the average group cost had been greater). Total industry costs in aggregate will not exceed the $31.1 million shown in Table 8-7, however.

TABLE 8-11. TOTAL FIFTH YEAR ANNUALIZED COST OF CONTROL ACCUMULATED FOR EIGHT POTENTIAL AIR REGULATIONS
12 Chemical Groups
United States
1978
(mid-1978 dollars)

| Chemical group | Rolled-through costs as a percent of direct costs[a] | Total rolled-through and direct costs for eight potential air regulations |
|---|---|---|
| Intermediates for: | | |
| General aromatics | 36.1 | $2,068,900 |
| General non-aromatics | 100.7 | 9,542,100 |
| Synthetic elastomers | 385.0 | 5,635,700 |
| Plastics & fibers | 81.0 | 21,737,900 |
| Plasticizers | 139.3 | 8,488,000 |
| Pesticides | 62.2 | 1,075,400 |
| Solvents | 123.6 | 4,791,700 |
| Detergents and surfactants | 6.9 | 3,285,600 |
| Fuel additives | 58.9 | 251,500 |
| Aerosol propellants & refrigerants | 72.4 | 835,100 |
| Coatings | 317.5 | 1,790,200 |
| Miscellaneous end-use chemicals | 4.1 | 1,264,200 |

[a]Rolled-through and direct costs are shown in Appendix I. Both sets of costs are generated for the distillation standards. The direct costs and rolled-through costs for individual chemicals are aggregated within each chemical group. The percentage cost increase when rolled-through costs are added to direct costs is calculated and total costs for all standards as given in Table 8-7 are increased by this percentage.

## 8.4 REFERENCES


1. Moore, D., Cost Comparison for Combustion Control Equipment. Memorandum to Distillation NSPS file. December 16, 1982.

2. Dawecki, T., Distillation Pipeline Costing Model Documentation. Memorandum to Distillation NSPS file. November 13, 1981.

3. Sarasua, A., Flare Cost Program (FLACOS) Documentation. Memorandum to Polymers and Resins NSPS file. February 2, 1982.

4. Basdekis, H.S., Emissions Control Options for the Synthetic Organic Chemicals Manufacturing Industry, Control Device Evaluation. Thermal Oxidation Supplement. November 1980, p. III-1 to III-17.

5. Desai, T., Memorandum to Distillation file.

6. Devitt, T., et al. The Population of Industrial and Commercial Boilers. PEDCo Environmental, Inc., May 1979, p. 33.

7. Senyk, D., Capital Cost Analysis for Using Industrial Boilers to Control VOC. Memorandum to Distillation NSPS file. June 29, 1982.

8. Reference 3.

9. Perry, R.H., Chemical Engineers Handbook. 1973, p. 5-32.

10. Reference 4, pg. V5 to V14.

11. Chemical Engineering, Volume 87, No.1. January 14, 1980, p. 7.

12. Chemical Engineering, Volume 86, No.1. January 1, 1979, p. 7.

13. Galloway, J., Meeting at the Mutual Building, July 16, 1980 on Retrofit Costs for Thermal Incineration. Memorandum to the Air Oxidation NSPS file. August 8, 1980.

14. Reference 4, pg. V4.

15. Kalcevic, V., Emissions Control Options for the Synthetic Organic Chemical Manufacturing Industry. Control Device Evaluation. Flares and the Use of Emissions as Fuels. August 1980. p. IV-2.

16. Richardson Engineering Services, Inc. The Richardson Rapid System, Process Plant Construction Cost Estimating Standards. Volume 4. 1981. pg. 15-42.

17. Reference 2.

18. Desai, T., Cost Parameters for Distillation NSPS Cost Impact Determination. Memorandum to Distillation NSPS file. March 16, 1982.

19. Chemical Engineering, Volume 87, No. 22. November 3, 1980.

20. Memorandum from Galloway, J., Energy and Environmental Analysis Inc., to Hurley, E., Energy and Environmental Analysis Inc. Air Oxidation NSPS. Discussion of the Average Capacity Utilization Factor Used in the Chemical Affordability Screening and Regulatory Analyses Computations. January 13, 1981.

21. Memorandum from Stelling, J., Radian Corporation, to Beck, D., EPA:CPB, and Bell, D., EPA:SDB. Distillation Operations Regulatory Analysis Using 98 Percent Flares. 20 p. August 26, 1982.

# 9. ECONOMIC ANALYSIS

This chapter considers the potential impacts of the control costs of NSPS for distillation on the chemical industry, chemical prices, production, employment, foreign trade, and small businesses. In particular, 219 chemicals that would be directly affected by the standards are examined.

The economic analysis consists of several sections. First, the chemical industry is described in terms of products, producers, employment, finances, prices, and international trade (Section 9.1.1). Subsequently, each chemical affected is described with respect to its plants, producers, capacity, production, price, and chemical group (Section 9.1.2). The base year for most statistics in this chapter is 1978, reflecting the base year used in the BID for NSPS on SOCMI air oxidation processes. The description of the industry includes a projection of the number of affected plants in each chemical group over the first five years of the standards (Section 9.1.3); the projection also is used as the basis for the aggregate cost estimates presented in Chapter 8.

A screening analysis is the central element in the economic impact analysis. The screening analysis and its worst-case cost assumptions are discussed in Section 9.2. A screening approach is used because over 200 chemicals would be affected and there is a need to distinguish chemicals with negligible costs from any with potentially large costs. As explained later in this chapter, even with worst-case cost assumptions, no chemical would have a price increase of 5 percent or more in 1987.

Most-likely estimates of aggregate control costs are used in Section 9.3 to describe the general impacts of the standards. Impacts on average prices, production, employment, and trade are discussed. Aggregate costs, small business impacts, and cumulative costs of eight different air pollution standards affecting chemicals are summarized in Section 9.4.

References are presented in Section 9.5. Two appendices present additional data for the economic analysis. Appendix H lists chemical producers and their plants. Appendix I presents plant operating and cost assumptions used in the screening, as well as screening results for each of the 219 chemicals.

## 9.1 INDUSTRY STRUCTURE

Distillation is used extensively in the manufacture of organic chemicals. NSPS for distillation would affect 219 chemicals directly, and numerous other chemical derivatives and products. Characteristics of the chemical industry are described below.

### 9.1.1 The Organic Chemical Industry

9.1.1.1 Industry Definition. Over 7,000 organic chemicals are produced each year. A small percentage of these chemicals account for the majority of the industry's production. NSPS for distillation would affect 219 chemicals that were produced in quantities greater than 45.4 Gg in 1979 (refer to Chapter 3). These chemicals account for approximately 92 percent of total organic chemical industry production by weight.[1] Chemical names used in Chapter 9 reflect the terminology used by the Chemical Abstracts Service of the American Chemical Society.[2]

Economic data used in this chapter generally refer to the United States customs territory (including the 50 states, the District of Columbia, and Puerto Rico).[3] Production quantities and prices generally reflect purities of 95 to 100 percent.[4] Some exceptions exist, such as formaldehyde (for which production and prices are quoted in terms of the 37 percent grade common in commercial applications). Such exceptions are noted in the tables presenting chemical-specific production and price data.

9.1.1.2 Products. Chemicals are used extensively throughout the economy. They act as substitutes for natural materials, facilitate production through their versatile processing qualities, and allow production of products with special qualities and performance features.

The magnitude of organic chemical production is extremely large. In 1979, an estimated 180,000 Gg of organic chemicals were produced in the U.S. This included 60,000 Gg of basic chemicals, 50,000 Gg of intermediate chemicals and solvents, and 70,000 Gg of finished chemicals. Approximately 55 percent of the raw materials for organic chemicals came from petroleum

refining, 40 percent from natural gas and related gas liquids, and 5 percent from coal.[5]

9.1.1.3 Producers. There are approximately 230 producers of the 219 chemicals covered by the standards. Many of these companies produce a variety of chemicals and operate several plants. Appendix H lists the organic chemical industry producers, their plant locations, and the relevant chemicals they produce, for the base year 1978.

Production of chemicals is relatively concentrated, with a small number of firms accounting for a large part of industry sales. It is estimated that 23 percent of total industry sales are attributable to the top four companies and 40 percent to the top ten.[6] However, concentration varies among specific groups within the organic chemical industry. For example, aerosol propellant and refrigerant chemicals each have fewer than six producers, with a single producer often accounting for a large percentage of total production, while each basic chemical has more than ten producers, with no single producer responsible for a high percentage of production.

Vertical integration, i.e., expansion into other steps within the chemical manufacturing process, is common among chemical firms. Thus, many firms find it profitable to expand into the chemical industry both forward from industries such as petroleum production and agriculture, and backward from chemical-using industries such as pharmaceuticals and paint goods. Expansion of chemical companies into non-chemical areas is not uncommon either. For instance, DuPont, Dow Chemical, American Cyanamid, and Rohm and Haas all have entered the non-prescription drug industry.[7] Table 9-1 details the 50 largest U.S. chemical producers and the percentage of their sales attributable to chemical products.[8] The average firm in this group receives less than half of its total sales from chemicals.

9.1.1.4 Industry Employment. Employment at plants producing the 219 regulated chemicals can be estimated on the basis of statistics for major classifications of organic chemical manufacturing. The U.S. Bureau of the Census classifies most organic chemicals in SICs 2865 (Cyclic Crudes and Intermediates) and 2869 (Industrial Organic Chemicals Not Elsewhere Classified). Since the 219 organic chemicals account for approximately 92 percent of total organic chemical production,[9] it can be inferred that

# TABLE 9-1. CHEMICAL SALES AS A PERCENTAGE OF TOTAL SALES AT THE 50 LARGEST U.S. CHEMICAL PRODUCERS 1980

| Rank | Company | Chemical sales ($10^6$) | Total sales ($10^6$) | Chemical sales as a percentage of total sales | Industry classification |
|---|---|---|---|---|---|
| 1 | DuPont | 10,250 | 13,652 | 75 | Basic chemicals |
| 2 | Dow Chemical | 7,217 | 10,626 | 68 | Basic chemicals |
| 3 | Exxon | 6,936 | 103,143 | 7 | Petroleum |
| 4 | Union Carbide | 5,650 | 9,994 | 57 | Basic chemicals |
| 5 | Monsanto | 5,453 | 6,574 | 83 | Basic chemicals |
| 6 | Celanese | 3,200 | 3,348 | 96 | Basic chemicals |
| 7 | Shell Oil | 3,089[a] | 19,830 | 16 | Petroleum |
| 8 | W.R. Grace | 2,733[a] | 6,101 | 45 | Specialty chemicals |
| 9 | Gulf Oil | 2,569[a] | 26,483 | 10 | Petroleum |
| 10 | Occidental Petroleum | 2,458[a] | 12,476 | 20 | Petroleum |
| 11 | Allied Corp. | 2,450 | 5,519 | 44 | Basic chemicals |
| 12 | Standard Oil (Indiana) | 2,235 | 26,133 | 9 | Petroleum |
| 13 | Hercules | 2,095 | 2,485 | 84 | Basic chemicals |
| 14 | Atlantic Richfield | 1,945 | 23,744 | 8 | Petroleum |
| 15 | American Cyanamid | 1,861[a] | 3,454 | 54 | Basic chemicals |
| 16 | Phillips Petroleum | 1,858 | 13,377 | 14 | Petroleum |
| 17 | Eastman Kodak | 1,837 | 9,734 | 19 | Photographic equipment |
| 18 | Stauffer Chemical | 1,643 | 1,695 | 97 | Basic chemicals |
| 19 | Rohm & Haas | 1,608 | 1,725 | 93 | Basic chemicals |
| 20 | Tenneco | 1,565 | 13,226 | 12 | Petroleum |
| 21 | Mobil | 1,558 | 59,510 | 3 | Petroleum |
| 22 | Borden | 1,548[a] | 4,596 | 34 | Dairy products |
| 23 | Ethyl | 1,517[a] | 1,741 | 87 | Basic chemicals |
| 24 | U.S. Steel | 1,437 | 12,492 | 12 | Steel |
| 25 | Texaco | 1,346 | 51,196 | 3 | Petroleum |
| 26 | Diamond Shamrock | 1,307 | 3,143 | 42 | Basic chemicals |
| 27 | Air Products | 1,262 | 1,421 | 89 | Basic chemicals |
| 28 | CF Industires | 1,233[a] | 1,233 | 100 | Agricultural chemicals |
| 29 | FMC | 1,215 | 3,482 | 35 | Farm and construction machinery |
| 30 | Williams | 1,171[a] | 2,073 | 57 | Agricultural chemicals |
| 31 | Standard Oil of California | 1,155 | 40,479 | 3 | Petroleum |
| 32 | Ciba-Geigy | 1,115 | 1,690 | 66 | Specialty chemicals |
| 33 | Ashland Oil | 1,100 | 8,118 | 14 | Petroleum |
| 34 | Mobay Chemical | 1,069 | 1,069 | 100 | Basic chemicals |
| 35 | Union Oil of California | 1,048 | 9,984 | 10 | Petroleum |
| 36 | B.F. Goodrich | 1,022 | 3,080 | 33 | Rubber products |
| 37 | International Minerals[b] | 974 | 1,790 | 54 | Agricultural chemicals |
| 38 | PPG Industries | 964 | 3,158 | 31 | Glass products |
| 39 | BASF Wyandotte | 917 | 917 | 100 | Basic chemicals |
| 40 | Lubrizol | 902 | 902 | 100 | Specialty chemicals |
| 41 | American Hoechst | 896 | 1,290 | 69 | Basic chemicals |
| 42 | Olin | 883 | 1,853 | 48 | Basic chemicals |
| 43 | Conoco | 875 | 18,301 | 5 | Petroleum |
| 44 | Reichhold Chemicals | 807 | 885 | 91 | Basic chemicals |
| 45 | National Distillers | 744 | 2,055 | 36 | Alcoholic beverages |
| 46 | Farmland Industries[c] | 734 | 4,745 | 15 | Agricultural supplies |
| 47 | Dow Corning | 681 | 681 | 100 | Specialty chemicals |
| 48 | Georgia-Pacific | 661[a] | 5,016 | 13 | Lumber and wood products |
| 49 | Borg-Warner | 631 | 2,673 | 24 | Automobile equipment |
| 50 | Nalco Chemical | 617 | 617 | 100 | Specialty chemicals |

[a]Chemical sales include significant amounts of final products, such as fabricated plastics, coatings, adhesives, minerals, and the like.

[b]For the year ended June 30, 1980.

[c]For the year ended August 31, 1980.

SOURCE: Reference 8.

they account for approximately the same share of total employment in organic chemical manufacturing, as reported by the Census. In 1981, employment among production and office workers in SICs 2865 and 2869 was 150,000.[10] Accordingly, employment at plants producing the 219 chemicals was approximately 140,000 in 1981.

Due to the large-scale operations present in the chemical industry, most employees work in plants that employ 250 or more persons. For example, in 1977 over 64 percent of the employees in SIC 2869 and 57 percent in SIC 2865 worked in plants with 250 or more employees.[11]

9.1.1.5 Industry Finances. Profitability and capital structure are the two major financial considerations for the chemical industry. Profitability helps to measure financial returns for investors within the industry. The industry's capital structure determines how it raises funds to finance its needs and growth. Also, the capital structure influences the amount and stability of industry earnings.

Profitability in the chemical industry has fluctuated during the last decade as illustrated by two measures: profit margin and return on stockholders' equity. Profit margin is after-tax earnings as a percentage of sales and represents the ability of an industry to produce goods and services at a profit. Sales are measured generally as "net sales," meaning gross sales less discounts to customers, and are measured as revenues before expenses or taxes. Return on stockholders' equity is after-tax earnings as a percentage of stockholders' equity. Figure 9-1 shows the annual profit margins[12,13] and Figure 9-2 the return on stockholders' equity for the chemical industry from 1970 through 1980.[14,15]

Between 1971 and the end of 1974, both ratios increased steadily, and then declined from the end of 1974 through 1976. In 1976, return on stockholders' equity began to increase while the profit margin did not start increasing until 1977. Both measures of profitability continued to increase throughout 1978 and 1979, but did not approach the high rates they achieved in 1974. In 1980, the profit margin and return on stockholders' equity fell once again.

The chemical industry has high fixed costs because of the large capital costs of plants. Fixed costs do not depend on the rate of production in any given period. When plants are not operating at full

**Figure 9–1. U.S. Chemical Industry Annual Profit Margin, 1970–1980.**
AFTER-TAX EARNINGS AS A PERCENTAGE OF NET SALES [a]

[a] Net sales equal gross sales less discounts to customers. Sales are measured before expenses and taxes.

**SOURCES: References 12 and 13.**

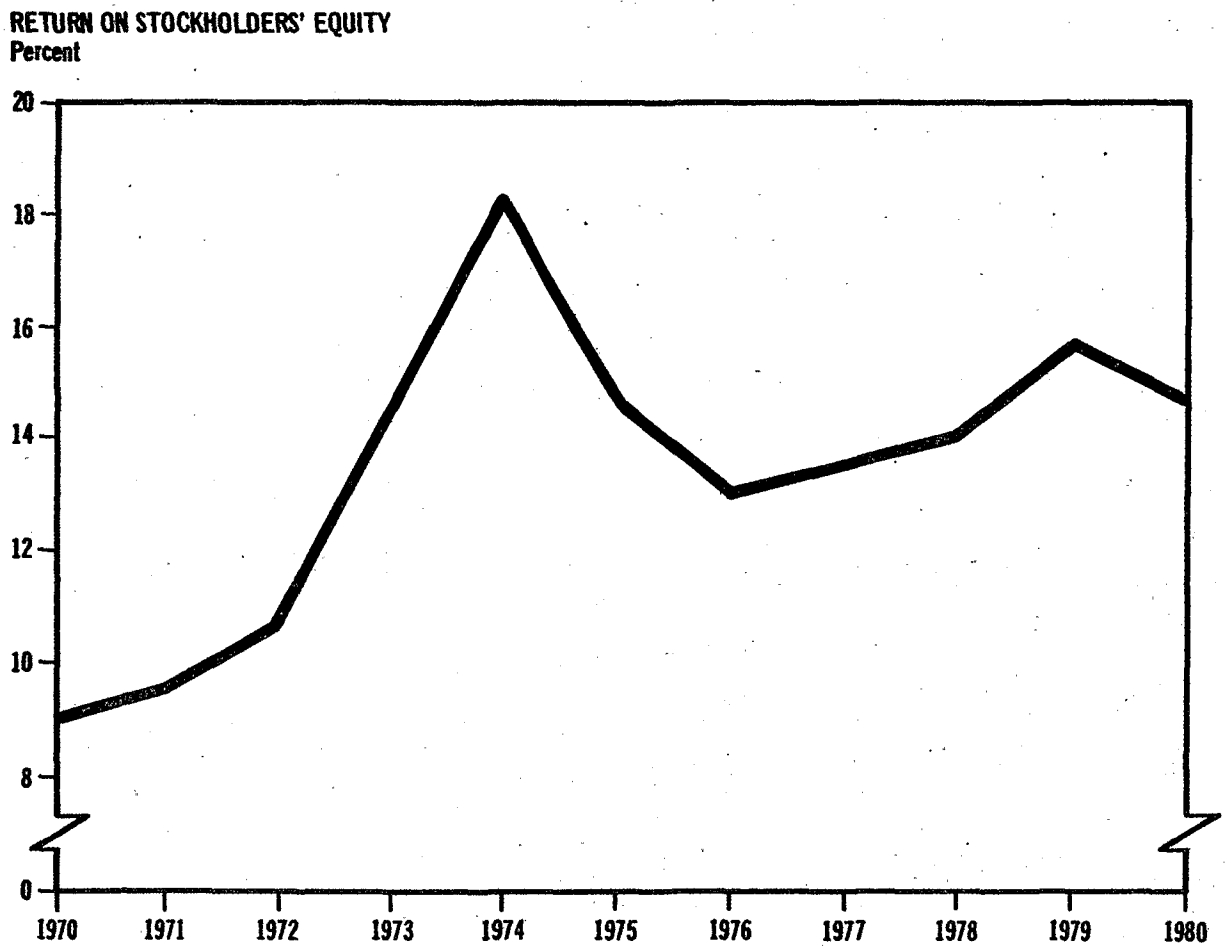


**Figure 9–2. U.S. Chemical Industry Annual Return on Stockholders' Equity**
AFTER-TAX EARNINGS AS A PERCENTAGE OF STOCKHOLDERS' EQUITY

SOURCES: References 14 and 15.

capacity, high fixed costs are spread over low production volumes resulting in a low profit margin and low return on stockholders' equity for the industry. The industry experienced capacity utilization rates below 80 percent from 1975 through 1977 and since 1980, while its capacity utilization rates were above 80 percent from 1971 through 1974 and 1978 through 1979.[16] The trend in capacity utilization correlates with the increasing profit margins in the earlier years and decreasing profit margins in recent years.

Operating costs also influence profitability in the industry. The chemical industry's major operating costs are for energy and raw material feedstocks, both of which are related to the prices of oil and gas. Consuming approximately 3,518 trillion kJ in 1978, the chemical industry is one of the largest energy consumers in the industrial sector.[17] Most organic chemicals are derived from oil or gas. Increasing oil and gas prices have led to higher operating costs for the industry.

Within the industry, however, there are some industry segments that are more profitable than others. Manufacturers of specialty chemicals generally have had the highest profitability rates among large chemical manufacturers. Chemical and Engineering News ranked the 40 largest (in terms of sales) U.S. chemical companies on the basis of various profitability ratios. The ranking showed that the top five companies in overall profitability in 1980 were Freeport-McMoran, Lawter International, Lubrizol, Texas Gulf, and Nalco Chemical.[18] All of these companies, except Texas Gulf, are specialty chemical firms. Producers of specialty chemicals compete more on product qualities and consumer services than on price. As a result, specialty chemical producers can pass increased costs to the users of their products.

Most of the 219 chemicals covered by NSPS for distillation are high-volume commodity chemicals, a characteristic that arises from the fact that each is produced in quantities of 45 Gg or more nationally. Commodity chemicals are sold in a more price-competitive environment because buyers can shop more easily among different producers and receive similar products. However, even though specialty chemicals earn higher margins, high-volume chemicals represent the bulk of total chemical sales, and chemical industry average profit measures are probably quite representative of profitability for the 219 chemicals.

Funds for investment are obtained from both internal sources (retained earnings and depreciation) and external sources (debt and stock issues). Table 9-2 provides specific information on sources of funds for a sample of firms.[19] Because the industry has large capital investments already in place which generate depreciation allowances, 32 percent of the funds for the sample group of chemical companies came from depreciation in 1980. Funds generated internally do not always meet expanding capital requirements for replacement plants, though. (In part, the increased capital requirements reflect the need for plants of a much larger scale in order to utilize the latest, more efficient technologies.) Therefore, issues of long-term debt also have been a major source of funds. In 1980, 17 percent of cash flow was generated through issues of long-term debt. When net income is low, investments must be funded to a greater extent through debt financing.

The ability of the industry to raise capital for long-term investment is sound, though marginally not as strong as it was in the past. The debt ratio (long-term debt as a percentage of long-term debt plus equity) has experienced only moderate changes during the past five years. In 1981, the debt ratio for the chemical industry was 29.3 percent, compared to 27.6 percent for chemicals five years earlier (see Table 9-3) and a debt ratio for all manufacturing firms of 26.0 percent in 1981.[20]

The main use of funds in the chemical industry is for capital expenditures in plant and equipment. Over 50 percent of its funds were used for capital expenditures during the 1969-1975 period; however, this percentage has been decreasing. Other funds are applied equally to dividends, reduction of long-term debt, and additions to working capital.[21]

9.1.1.6 Prices. A watershed year for prices in the organic chemical industry was 1973. Before 1973, the industry was characterized by steady price decreases for most of its products. Rapid growth in the industry promoted extensive process research and plant investment, which resulted in more efficient and economical production processes. Since 1973, though, prices in the industry have soared, mainly due to increased oil and gas prices and feedstock shortages. Chemical prices are influenced by the relationship between production capacity and demand. When facilities are highly utilized, producers generally are better able to implement price

TABLE 9-2. COMBINED CASH FLOW AT 15 MAJOR U.S. CHEMICAL PRODUCERS
1977-1981

| Item | 1981[a] $ million[b] | 1981[a] % of total | 1980 $ million[b] | 1980 % of total | 1979 $ million[b] | 1979 % of total | 1978 $ million[b] | 1978 % of total | 1977 $ million[b] | 1977 % of total |
|---|---|---|---|---|---|---|---|---|---|---|
| SOURCE OF FUNDS | | | | | | | | | | |
| Net Income | 4,360 | 18.2 | 3,980 | 33.2 | 3,800 | 36.3 | 3,090 | 33.6 | 2,750 | 30.6 |
| Depreciation and depletion | 4,270 | 17.9 | 3,820 | 31.8 | 3,600 | 34.4 | 3,200 | 34.8 | 2,830 | 31.5 |
| Deferred taxes | 1,010 | 4.2 | 680 | 5.7 | 430 | 4.1 | 350 | 3.8 | 360 | 4.0 |
| Other internal sources | 1,830 | 7.7 | 820 | 6.8 | 1,090 | 10.5 | 930 | 10.1 | 1,210 | 13.5 |
| Long-term debt | 7,490 | 31.4 | 2,080 | 17.3 | 1,210 | 11.6 | 1,540 | 16.8 | 1,610 | 17.9 |
| Stock | 4,930 | 20.6 | 630 | 5.2 | 320 | 3.1 | 80 | 0.9 | 230 | 2.5 |
| TOTAL | 23,890 | 100.0 | 12,000 | 100.0 | 10,450 | 100.0 | 9,190 | 100.0 | 9,000 | 100.0 |
| APPLICATION OF FUNDS | | | | | | | | | | |
| Dividends | 1,850 | 7.7 | 1,600 | 13.4 | 1,470 | 14.1 | 1,320 | 14.3 | 1,180 | 13.1 |
| Capital expenditures | 8,340 | 34.9 | 7,030 | 58.5 | 5,630 | 53.9 | 5,080 | 55.3 | 5,490 | 61.0 |
| Additions to working capital | 3,760 | 15.7 | 1,060 | 8.8 | 1,080 | 10.3 | 860 | 9.4 | 520 | 5.8 |
| Reductions to long-term debt | 1,490 | 6.3 | 1,120 | 9.3 | 1,040 | 10.0 | 880 | 9.5 | 750 | 8.3 |
| Other applications | 8,450 | 35.4 | 1,200 | 10.0 | 1,230 | 11.7 | 1,050 | 11.5 | 1,060 | 11.8 |
| TOTAL | 23,890 | 100.0 | 12,000 | 100.0 | 10,450 | 100.0 | 9,190 | 100.0 | 9,000 | 100.0 |

[a]Figures for 1981 reflect several large corporate acquisitions financed via stock and debt issues.

[b]Nominal dollars.

SOURCE: Reference 19.

TABLE 9-3. DEBT RATIO[a] AT CHEMICAL COMPANIES AND ALL MANUFACTURING COMPANIES
1971-1981
(Percent)

| Company group | 1981 | 1980 | 1979 | 1978 | 1977 | 1976 | 1975 | 1974 | 1973 | 1972 | 1971 |
|---|---|---|---|---|---|---|---|---|---|---|---|
| Chemicals and allied products | 29.3 | 26.3 | 27.0 | 27.9 | 27.8 | 27.6 | 26.9 | 23.8 | 22.6 | 24.2 | 24.6 |
| All manufacturing | 26.0 | 25.2 | 24.7 | 24.5 | 24.6 | 24.4 | 25.0 | 24.2 | 23.5 | 25.1 | 25.4 |

[a]Debt ratio is defined as long-term debt as a percentage of long-term debt plus stockholders' equity.

SOURCE: Reference 20.

increases. When a large share of plant capacity is idle, producers frequently must offer discounts or reduce prices to maintain their plant utilization levels, with the consequence being that cost increases are more difficult to recover through price increases.

Supply conditions affect chemical prices. If a feedstock for a chemical is in short supply or is used for other priorities, the selling price of the chemical is apt to rise. This was the case throughout the organic chemical industry during the Arab oil embargo that began in October 1973. Alternatively, if a large amount of new capacity comes on line for a product, the product's price is apt to decrease.

Demand for organic chemicals is determined mostly by the demand for the end products that use the chemicals as materials in their production. For example, 1,3-butadiene is used to produce styrene-butadiene-rubber (SBR), which is used to produce tires, primarily for automobiles. Therefore, the demand for automobiles influences the demand for 1,3-butadiene. Since chemicals consumption is spread throughout the economy, cyclical macroeconomic trends affect chemical demand and prices.

Low capacity utilization rates for an industry indicate that fixed costs are spread over fewer units of production. Effective costs per unit of production therefore are higher. Capacity utilization is expressed as a ratio of actual production over nameplate production capacity. A facility is said to be operating at optimal capacity when capacity utilization, in the long run, is 85 to 95 percent of nameplate production capacity.[22] Beyond this level a strain is put on plant equipment. Excess production capacity, or low capacity utilization, often characterizes the chemical industry. In 1978, capacity utilization averaged 83 percent, while in 1981, capacity utilization fell to 70 percent.[23]

When the demand for chemicals is low for long periods, some producers "mothball" plants either temporarily or indefinitely. Official statistics on nameplate production capacity generally exclude capacity at plants that are felt to be closed permanently. However, capacity at plants that are closed only temporarily is included in nameplate capacity statistics. Therefore, a plant that is still operating during a recession is probably operating at a rate equal to, or greater than, the average utilization rate that is obtained by dividing production into nameplate capacity (since some

of the nameplate capacity at other plants may actually be out of service at the time).[24] In the base year statistics used in this analysis, however, there probably are few "mothballed" plants because capacity utilization in 1978 (the base year) was not indicative of a general recession that would have led to many plants being idled. Accordingly, the base year statistics can be viewed as representative statistics on the nameplate capacity for operable plants in that year.

Chemical journals and periodicals usually use list prices when reporting the cost of a chemical. The list price is used as a focal point around which other chemical prices are formed. Chemical producers typically base their list prices on a full-cost or cost-plus method. The full-cost pricing method involves adding a desired profit margin to estimated unit costs. Cost-plus pricing uses a percentage return on equity instead of a profit margin on sales when calculating product price. However, a lower unit profit is set if demand is thought generally to be elastic.

Because of the use of full-cost or cost-plus pricing, list prices of organic chemicals are related to the cost of feedstocks. Chemical prices generally are tied to the cost of oil or natural gas. A rise in the cost of natural gas, for example, could cause a corresponding rise in the price of natural gas-based chemicals. Figure 9-3 shows this relationship by comparing a composite price index of five oil-based chemicals (benzene, oxirane, 4-methyl-2-pentanone, propylene glycol, and cyclohexanone) with an index of crude oil prices from 1968 through 1978.[25]

The market price is determined by supply and demand at a particular time. Given the fact that supply and demand conditions change frequently, producers offer discounts or add surcharges to list prices at times to keep their prices at market levels. When prices in this analysis are quoted from published sources, they represent list prices at major marketplaces (such as New York). When prices are derived as averages of the annual value of shipments divided by the annual volume of production, they represent actual unit prices (albeit averaged across a 12-month period) for all quantities sold in the U.S. Transportation costs to particular user locations are components in the price of chemicals to individual users, and can be added onto prices used here in figuring costs to users. Ordering quantities also affect prices; the price for a single drum of a given chemical may be considerably higher, per kg, than for drums ordered in lots of 50 or

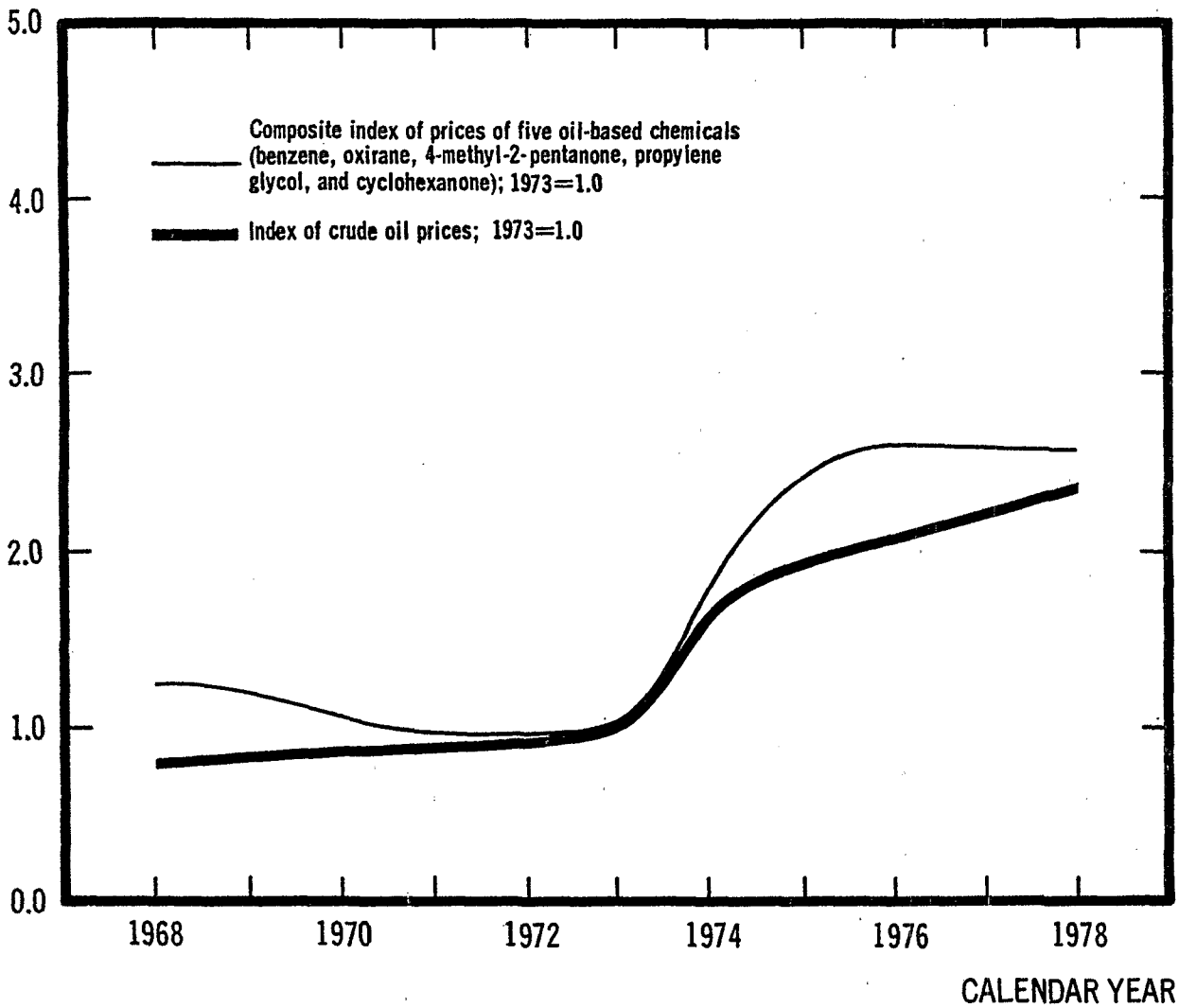


**Figure 9–3. Composite Index of Five Oil-Based Organic Chemicals and Index of Crude Oil Prices**

**1968 THROUGH 1978**

for tank car lots. Quantities reflected in chemical price quotations used in Chapter 9 range from shipments of one drum to large orders under long-term contracts.

9.1.1.7 Foreign Trade. Chemicals have been a positive factor in U.S. trade with other countries. While the U.S. has generally had an annual deficit of $24 billion to $29 billion each year in its overall trade of products since 1977, the U.S. has exported more chemicals than it has imported. In 1981, the U.S. exported $21.2 billion of chemicals and imported only $9.4 billion of chemicals (see Table 9-4). Organic chemicals (and products such as plastics and resins) account for over half of the surplus in U.S. chemicals trade.[26,27] Imports and exports for selected chemicals are shown in Table 9-5.[28,29]

The substantial surplus of U.S. chemical exports over imports is the result, in large part, of a cost advantage that U.S. producers have had over producers in Europe, Japan, and other countries. When the oil-exporting countries raised prices for their oil exports, a large differential developed between the world oil price and the price of oil and gas in the U.S. Oil and gas prices in the U.S. have increased at a slower rate because of federal controls.

In 1981, however, prices for domestic oil were decontrolled.[30] Prices for natural gas are in the process of being decontrolled in phases. By 1985, most natural gas will have been decontrolled.[31] U.S. chemical producers, particularly new plants, will use higher-priced oil and gas for raw materials and, therefore, will have production cost structures that will resemble those of European producers to a greater degree than in the past. European producers generally use naphtha from oil as their primary raw material for production of their basic chemicals.

As raw material costs increase for domestic producers, U.S. chemicals will become less competitive in world markets. Moreover, several countries are constructing large-scale chemical plants to use natural gas for manufacturing chemicals, much of which will be for sale on the world market. Saudi Arabia, Canada, and Mexico, among others, are building plants with the prospect that they will displace U.S. exports in many regions.[32]

Several factors will allow U.S. chemical producers to retain at least some of their trade advantages. First, decontrol of gas is a slow, phase-in process and will not lead to total decontrol of all gas, even in the

TABLE 9-4. U.S. BALANCE OF TRADE IN CHEMICALS AND ALL PRODUCTS 1975-1981

| Year | Chemicals ($ billion[a]) | All products ($ billion[a]) |
|---|---|---|
| 1975 | 5.0 | 10.2 |
| 1976 | 5.1 | -5.9 |
| 1977 | 5.4 | -26.5 |
| 1978 | 6.1 | -28.5 |
| 1979 | 9.8 | -24.7 |
| 1980 | 12.1 | -24.2 |
| 1981 | 11.7 | -27.3 |

[a]Nominal dollars.

SOURCES: References 26 and 27.

TABLE 9-5. SELECTED CHEMICAL IMPORTS AND EXPORTS: LEVELS AND PERCENTAGES OF U.S. PRODUCTION 1978

| Chemical | Exports (Gg) | Exports as a percentage of U.S. production | Imports (Gg) | Imports as a percentage of U.S. production |
|---|---|---|---|---|
| Acetaldehyde | NA | NA | Neg | Neg |
| Acetic acid | 7.7 | 0.6 | 25.6 | 2.0 |
| Acetic acid, anhydride | 1.9 | 0.3 | 11.2 | 1.9 |
| Acetic acid, ethenyl ester | 164.7 | 21.5 | 10.8 | 1.4 |
| Acetic acid, ethyl ester | 28.7 | 21.1 | 2.9 | 2.1 |
| 2-Aminoethanol | 36.9 | 61.5 | NA | NA |
| Benzene | 151.2 | 3.2 | 102.1 | 2.1 |
| 1,3-Benzenedicarboxylic acid | 2.0 | 4.4 | Neg | Neg |
| 1,2-Benzenedicarboxylic acid, bis (2-ethylhexyl) ester | 0.7 | 0.4 | NA | NA |
| 1,2-Benzenedicarboxylic acid, diisodecyl ester | 0.3 | 0.4 | NA | NA |
| 1,4-Benzenedicarboxylic acid, dimethyl ester | 90.4 | 4.9 | Neg | Neg |
| 2,2-Bis (hydroxymethyl)-1,3-propanediol | 5.8 | 10.5 | NA | NA |
| 1,3-Butadiene | 42.5 | 2.7 | 282.0 | 17.7 |
| Butanal | 18.1 | 5.1 | Neg | Neg |
| 1-Butanol | 17.1 | 5.0 | 9.8 | 2.9 |
| 2-Butanone | 15.5 | 5.2 | 24.7 | 8.2 |
| Carbon disulfide | NA | NA | 2.9 | 1.3 |
| Chloroethane | 12.8 | 5.2 | Neg | Neg |
| Chloroethene | 407.7 | 13.0 | NA | NA |
| Chloromethane | 3.8 | 1.8 | 27.7 | 13.4 |
| Cyclohexane | 161.8 | 15.3 | 4.5 | 0.4 |
| 1,2-Ethanediol | 56.8 | 3.2 | 50.1 | 2.8 |
| Ethanol | 16.1 | 2.8 | 65.8 | 11.4 |
| Ethenylbenzene | 357.3 | 11.0 | 14.0 | 0.4 |
| 2-Ethoxyethanol | 6.6 | 3.6 | 15.7 | 8.7 |
| Ethylbenzene | 85.9 | 2.3 | NA | NA |
| Formaldehyde | 10.4 | 0.4 | 1.1 | Neg |
| 2,5-Furandione | 1.3 | 0.8 | 1.0 | 0.6 |
| D-Glucitol | 13.9 | 14.9 | NA | NA |
| 1,6-Hexanediamine | 2.9 | 1.0 | 1.7 | 0.6 |
| Hexanedioic acid | 3.3 | 0.4 | 2.1 | 0.3 |
| 2-Hydroxy-1,2,3-propanetricarboxylic acid | 9.1 | 7.9 | 2.5 | 2.2 |
| 1,3-Isobenzofurandione | NA | NA | 18.3 | 4.1 |
| Methanol | 111.3 | 3.8 | 218.8 | 7.5 |
| 2-Methoxyethanol | 5.1 | 9.8 | 0.2 | 0.4 |
| 2-Methyl-1,3-butadiene | 4.3 | 3.0 | 1.0 | 0.7 |
| (1-Methylethyl) benzene | 39.7 | 2.6 | 256.8 | 16.8 |
| Methyloxirane | 34.1 | 3.7 | 15.9 | 1.7 |
| 4-Methyl-2-pentanone | 6.4 | 6.0 | 2.5 | 2.4 |
| 2-Methyl-2-propenoic acid, methyl ester | 31.4 | 8.6 | 1.6 | 0.4 |
| Naphthalene | 4.0 | 5.6 | Neg | Neg |
| Oxirane | 34.6 | 1.5 | 0.4 | Neg |
| Phenol | 103.9 | 8.5 | 0.1 | Neg |
| 1,2-Propanediol | 15.4 | 6.2 | 2.1 | 0.8 |
| 1,2,3-Propanetriol | 18.8 | 30.8 | 3.6 | 5.9 |

TABLE 9-5 (Continued). SELECTED CHEMICAL IMPORTS AND EXPORTS: LEVELS AND PERCENTAGES OF U.S. PRODUCTION 1978

| Chemical | Exports (Gg) | Exports as a percentage of U.S. production | Imports (Gg) | Imports as a percentage of U.S. production |
|---|---|---|---|---|
| Propanoic acid | 5.1 | 5.6 | 3.7 | 4.1 |
| 1-Propanol | 12.7 | 17.4 | Neg | Neg |
| 2-Propanol | 68.8 | 8.8 | 14.7 | 1.9 |
| 2-Propanone | 54.6 | 4.8 | 0.6 | 0.1 |
| 1-Propene | 11.5 | 0.2 | 148.1 | 2.5 |
| 2-Propenenitrile | 134.8 | 17.0 | 1.5 | 0.2 |
| 2-Propenoic acid, ethyl ester | 21.0 | 15.4 | Neg | Neg |
| Tetrachloroethene | 29.0 | 8.8 | 16.7 | 5.1 |
| Tetrachloromethane | 16.4 | 3.7 | 4.0 | 0.9 |
| Tetraethylplumbane | NA | NA | Neg | Neg |
| 1,1,1-Trichloroethane | 18.0 | 6.2 | NA | NA |

NA = information not available
Neg = negligible

SOURCES: References 28 and 29.

mid-1980s.[33] Second, gas-based plants in other countries are subject to delays or changes in their countries' pricing policies for gas; Canada, for example, has changed its gas pricing policy and this will affect some Canadian chemical plants.[34] Third, the U.S. chemical industry has efficient inter-plant distribution networks, better technology in some cases, and economies of scale. Fourth, many U.S. chemical plants are being constructed with raw material flexibility -- the ability to select the raw materials that have the lowest price at any particular time.[35] In contrast, European producers and many others must use naphtha regardless of naphtha's price or availability. On the other hand, a number of European chemical plants will use gas from the North Sea, a factor that will favor their competitiveness against U.S. plants.[36]

Overall, U.S. chemical producers will lose a large element of the export strength that they have had in recent years because of the underlying reduction in their advantage in raw materials costs. This trend was foreseeable at the time the growth projections (used in Section 9.1.2) were made and are factored to a degree into the projections. However, it is uncertain how strong the residual advantages of U.S. chemical producers will be in the 1980s and 1990s, and at some point the lost advantages will lead to a slower pace of plant construction in the U.S.

The U.S. is protected from organic chemicals imports due to high tariffs. This is true especially with regard to the benzenoid imports category, which contains many of the organic chemicals. The benzenoid group includes any chemical whose molecular structure has one or more six-membered carbocyclic or heterocyclic rings with conjugated double bonds (e.g., benzene or pyridine rings). Until recently, tariff valuation for some benzenoid chemicals was extremely protective under the American Selling Price (ASP) system. The ASP customs valuation system in some cases led to a tariff representing approximately 20 percent or more of the selling price of imports, making it difficult for foreign producers to sell to the U.S. at a profit.

Recent multilateral trade negotiations scrapped the ASP system and replaced it with a new set of tariffs that became effective July 1, 1980. However, many benzenoid chemicals do not have large reductions under the new tariff system.[37] These benzenoid chemicals represented a $226 million portion of the $688 million in dutiable benzenoid imports during 1976. A

substantial tariff reduction was implemented for non-benzenoid chemicals and diminished high tariffs by a greater percentage than low tariffs. The average U.S. duty rate for such chemical imports will be approximately 7 to 7.5 percent when the new rates are fully phased in (1987).[38] Tariff rates for all chemicals have now been set on the basis of "transaction value," which is the foreign invoice price plus shipping insurance.[39]

Even though tariffs have been decreased in some instances by the recent trade pact, organic chemicals still are highly protected. This is true especially for benzenoid products. However, U.S. producers face occasional problems in competing with government-subsidized non-U.S. producers or exporting to regulated non-U.S. markets. These problems, though, should not prevent the continuation of a balance of trade surplus through the next five years, given the continued favorable treatment of many benzenoid products in the new tariff system, the relatively small decrease in most tariff rates, and the continued cost advantages many U.S. chemical producers will have over European competitors.

9.1.1.8 Chemical Groups. The 219 chemicals can be categorized into 14 chemical groups based on their major functions or end uses. The chemical groups are listed below and are illustrated in Figure 9-4.

1. Basic chemicals
2. Intermediates used in the production of:
   - (I) General aromatics; general nonaromatics
   - (II) Synthetic elastomers
   - (III) Plastics and fibers
   - (IV) Plasticizers
   - (V) Pesticides
   - (VI) Dyes
3. Solvents
4. Detergents and surfactants
5. Fuel additives
6. Aerosol propellants and refrigerants
7. Coatings
8. Miscellaneous end-use chemicals.

Intermediates are classified "general" if one of the following statements is true:

- Their main use represents less than 40 percent of total use.
- No data were found to indicate shares among the end uses for that particular chemical.

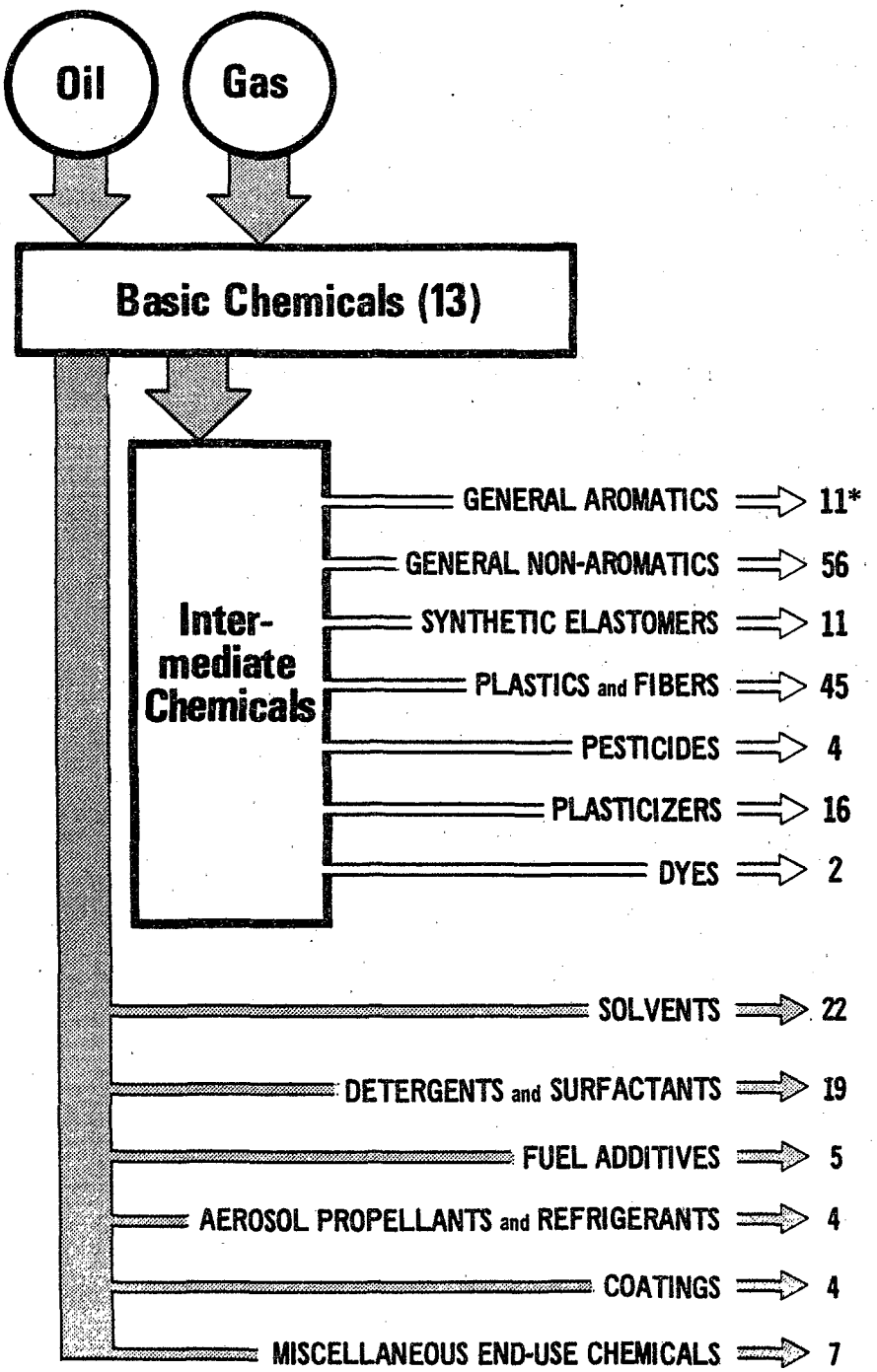


**Figure 9–4. Processing flow for 219 organic chemicals.**

*Numbers indicate the number of chemicals in each group of the 219 chemicals directly affected by NSPS for distillation.

In each group, specific information on products is presented including capacity, production, capacity utilization, and price. Data presented in this manner highlight factors and trends within the chemical groups that may be important in the determination of economic impacts. It must be noted, however, that production shown for chemicals within each group represents total production of each chemical for all uses, not only the main use of that group.

9.1.1.8.1 Basic chemicals. The economics of a large number of intermediate and end-use chemicals are influenced by the building block chemicals of the industry, the primary or basic chemicals. Table 9-6 shows the basics and their level of production, annual nameplate capacity, and market price in 1978.[40,41,42] Basics are derived from crude oil or natural gas.

Because the chemical industry involves a considerable number of conversion steps between chemicals in the chain of production from raw materials to finished chemical products, terminology is difficult to define precisely for some chemical groups. As the term is used here, chemicals produced directly from oil or gas for production of other chemicals are termed "basic" chemicals. (In common language, many basic chemicals may be referred to as "feedstocks." There is an overlap between the term "basic" chemicals and common usage of the term "feedstocks," the latter term also having very specific connotations in the refining industry.) The underlying denominator of "basic" chemicals is that they are important building blocks for the production of many derivative chemicals and are produced directly by refineries.

Crude oil is used as the raw material for approximately 55 percent of basics.[43] Aromatics, such as benzene, methylbenzene (toluene), and dimethylbenzene (xylene), are the major basics derived from crude oil. About 25 percent of basic chemicals used by the organic chemical industry are aromatics.[44] Not only are these three chemicals used in great quantities, but they are used in all segments of the organic chemical industry. The competing demand for aromatics as gasoline components therefore has been a serious concern for the industry.

A large portion of aromatics production is used in gasoline to provide high octane ratings. The nation's demand pattern for gasoline determines

TABLE 9-6. U.S. PLANTS, PRODUCERS, CAPACITY, PRODUCTION, CAPACITY UTILIZATION, AND PRICE
Basic Chemicals
1978

| Chemical | Number of plants | Number of producers | Capacity (Gg) | Production (Gg) | Capacity utilization (%) | 1978 price ($/Kg) |
|---|---|---|---|---|---|---|
| Benzene | 54 | 34 | 7,115 | 4,765 | 67 | 0.22 |
| Butane | 21[a] | 14 | 1,125[b] | 934 | 83[b] | 0.11 |
| 1-Butene | 8 | 6 | 517 | 429[b] | 83[b] | 0.41 |
| 2-Butene | 3[a] | 2 | 1,406[b] | 1,167 | 83[b] | 0.27 |
| Dimethylbenzenes (mixed) | 37 | 30 | 4,398 | 2,909 | 66 | 0.16 |
| Ethene | 37 | 26 | 14,973 | 11,773 | 79 | 0.28 |
| Methylbenzene | 47 | 32 | 5,477 | 3,421 | 62 | 0.17 |
| 2-Methylbutane | 2 | 2 | 54[b] | 45[c] | 83[b] | 0.14 |
| 2-Methylpropane | 20[a] | 13 | 657[b] | 545 | 83[b] | 0.14 |
| Naphthalene | 12 | 6 | 338 | 71 | 21 | 0.34 |
| Pentane | 3 | 3 | 54[b] | 45[c] | 83[b] | 0.14 |
| Propane | 35[a] | 23 | 4,622[b] | 3,836 | 83[b] | 0.12 |
| 1-Propene | 67 | 37 | 7,977 | 5,903 | 74 | 0.21 |

[a]Estimated on the basis of the group average plant-to-producer ratio of 1.5.

[b]Estimated on the basis of the 1978 chemical industry average capacity utilization rate of 83.0 percent.

[c]Estimated on the assumption that the minimum chemical production level is 45.4 Gg.

SOURCES: References 40, 41, and 42.

the use of aromatics in this market. Due to downsizing of automobiles and fuel conservation, U.S. gasoline consumption is expected to decline during the 1980s. The effect of decreased gasoline consumption on the aromatics market will be offset by unleaded gasoline's replacing most leaded gasoline by 1990, and unleaded gasoline has a particularly high demand for aromatics. Therefore, the gasoline market will continue to determine the availability and price of the aromatics used by the organic chemical industry.[45]

Natural gas, including natural gas liquids separated from natural gas, supplies over 40 percent of the raw material for basic chemicals.[46] Paraffins, such as ethane, propane, and n-butane, are single bond compounds found in natural gas liquids. Cracking or dehydrogenating the single bond compounds yields other petrochemical building blocks including the olefins, the most important of which is ethene (ethylene). Ethene's major derivatives are polyethenes, oxirane, chloroethene, ethylbenzene, vinyl chloride, ethylene glycol, and styrene, which are used for producing fabricated plastics, antifreeze, fibers, and solvents.[47] The demand for ethene, therefore, is related to the demand for these products. Another major basic chemical that is related closely to ethene is 1-propene (propylene). Essentially, 1-propene is produced as a co-product of ethene. When ethene demand falls and it is produced in lesser quantities, the production of 1-propene also decreases. Approximately 25 percent of 1-propene production is used to make polypropene, 25 percent for 2-propenenitrile, 15 percent for 2-propanol, and 10 percent for methyloxirane. Therefore, the major downstream use of 1-propene is fabricated plastics manufacturing.[48] Ethene and 1-propene can be made from either natural gas or crude oil. Due to the scheduled decontrol of most gas by 1985, industry analysts anticipate a shift from natural gas liquids to crude oil among sources of olefins.

Basic chemicals are produced both by oil companies (including their chemical subsidiaries) and by the major chemical companies. Because aromatics are products of petroleum refining, petroleum companies are the major producers. Although the major chemical companies also produce aromatics, their strength is in the production of olefins and other chemicals. Chemical companies use most of their basic chemical production captively for

chemical production, but also provide feedstock supplies to smaller, less diversified firms. There will be some changes in the future, however, as chemical companies concentrate on downstream products and petroleum companies increase their dominance in the feedstock industry.

As mentioned above, the chemical industry's stronghold among basic chemicals is olefins. The industry, however, built its strength on the cracking of natural gas liquids. The economic disadvantages of this method after 1985 will cause a shift away from this production process.[49] In anticipation of this shift, olefins plants are being built with feedstock flexibility for using alternative raw materials. As a result, industry analysts speculate that in the future chemical companies will enter the olefins business only in partnership with oil companies.[50] Although the future of basic chemicals is determined mainly by the availability and price of crude oil and natural gas, coal should not be overlooked as a raw material. Current use of coal as a raw material is limited, but research is concentrating on increasing coal's use for a number of chemicals.

9.1.1.8.2 Intermediates. Intermediates are used in the production of other chemical products and are considered stepping stones between basic chemicals and final chemicals or products. Two characteristics of intermediate chemicals are important. First, many producers of intermediates captively consume their intermediate products. Because of captive consumption, production figures for some intermediates may understate actual production. Furthermore, some high volume intermediates always are consumed captively by their producers. For these products, it is difficult to assess the reliability of production data, if available, and there are no markets from which prices can be determined. Second, demand for intermediates depends upon the demand for their derivatives. Intermediate chemicals are grouped according to the characteristics of their principal end products. Therefore, the groups help indicate the major factors that influence demand for the intermediates. A discussion of several groups of intermediates follows.

(I) General aromatics and general nonaromatics. Tables 9-7 and 9-8 show data on chemicals classified as general aromatics and general non-

TABLE 9-7. U.S. PLANTS, PRODUCERS, CAPACITY, PRODUCTION, CAPACITY UTILIZATION, AND PRICE
Intermediates: General Aromatics
1978

| Chemical | Number of plants | Number of producers | Capacity (Gg) | Production (Gg) | Capacity utilization (%) | 1978 price ($/Kg) |
|---|---|---|---|---|---|---|
| Benzenesulfonic acid | 5 | 5 | 54[a] | 45[a] | 83[a] | 0.72 |
| Benzoic acid, technical | 5 | 4 | 116 | 45[b] | 39[b] | 0.53 |
| Chlorobenzene, mono- | 6 | 6 | 279 | 134 | 48 | 0.49 |
| (Chloromethyl) benzene | 5 | 4 | 84 | 50 | 60 | 0.73 |
| Dibutanized aromatic concentrate | 4[d] | 4 | 54[a] | 45[b] | 83[a] | 0.14 |
| Diethylbenzene | 2 | 2 | 54[a] | 45[b] | 83[a] | 1.10 |
| (1-Methylethyl) benzene | 14 | 13 | 1,991 | 1,533 | 77 | 0.24 |
| 1-Methyl-2-pyrrolidinone | 3 | 2 | 54[a] | 45[b] | 83[a] | 1.59 |
| Phenol | 18 | 16 | 1,566 | 1,217 | 78 | 0.35 |
| Propylbenzene | 3 | 3 | 54[a] | 45[b] | 83[a] | NA[c] |
| 1,2,3,4-Tetrahydrobenzene | 2 | 2 | 1,257[a] | 1,043 | 83[a] | NA[c] |

[a]Estimated on the basis of the 1978 chemical industry average capacity utilization rate of 83 percent.

[b]Estimated on the assumption that the minimum chemical production level is 45.4 Gg.

[c]Price is not available. Chemical is analyzed under a threshold price approach based on the cost of input chemicals.

[d]Estimated on the basis of the group average plant-to-producer ratio of 1.1.

SOURCES: References 51, 52, and 53.

# TABLE 9-8. U.S. PLANTS, PRODUCERS, CAPACITY, PRODUCTION, CAPACITY UTILIZATION, AND PRICE
## Intermediates: General Nonaromatics
## 1978

| Chemical | Number of plants | Number of producers | Capacity (Gg) | Production (Gg) | Capacity utilization (%) | 1978 price ($/Kg) |
|---|---|---|---|---|---|---|
| Acetaldehyde | 5 | 4 | 668 | 540 | 81 | 0.42 |
| Acetic acid, magnesium salt | 4[a] | 3 | 54[b] | 45[c] | 83[b] | 2.89 |
| Alcohols, C-11 or lower, mixtures | 7[a] | 5 | 199[b] | 165 | 83[b] | 0.73 |
| Alcohols, C-12 or higher, mixtures | 7[a] | 5 | 199[b] | 165 | 83[b] | 0.64 |
| 1,4-Butanediol | 4 | 3 | 138 | 127 | 92 | 0.97 |
| Butanes, mixed | 1[d] | 1[d] | 54[b] | 45[c] | 83[b] | 0.15 |
| Butanoic acid, anhydride | 1 | 1 | 54[b] | 45[c] | 83[b] | NA[e] |
| 1-Butanol | 9 | 8 | 542 | 343 | 63 | 0.37 |
| 2-Butanol | 4 | 3 | 279 | 189 | 68 | 0.51 |
| 2-Butenal | 2 | 2 | 54[b] | 45[c] | 83[b] | NA[e] |
| 2-Butyne-1,4-diol | 2 | 1 | 54[b] | 45[c] | 83[b] | 2.05 |
| Carbamic acid, monoammonium salt | 1[d] | 1[d] | 54[b] | 45[c] | 83[b] | NA[e] |
| Carbonic dichloride | 17 | 15 | 814 | 588 | 72 | 0.55 |
| Chloroethane | 7 | 6 | 386 | 245 | 63 | 0.33 |
| Chloromethane | 11 | 9 | 281 | 206 | 73 | 0.31 |
| (Chloromethyl) oxirane | 3 | 2 | 213 | 157 | 74 | 1.06 |
| 2-Chloro-1-propanol | 2 | 2 | 1,277[b] | 1,060 | 83[b] | NA[e] |
| 3-Chloro-1-propene | 5 | 3 | 157[b] | 130 | 83[b] | 0.63 |
| Cyclohexane, oxidized | 8 | 7 | 1,139 | 899 | 79 | 0.78 |
| Cyclohexanol | 9 | 7 | 569 | 511 | 90 | 0.82 |
| Cyclohexanone | 8 | 7 | 570 | 527 | 92 | 0.73 |
| Cyclohexanone oxime | 4 | 4 | 54[b] | 45[c] | 83[b] | NA[e] |
| 1,2-Dibromoethane | 4 | 4 | 125[b] | 104 | 83[b] | 0.77 |
| 1-Dodecene | 10 | 8 | 196[b] | 163 | 83[b] | 0.27 |
| 2,2'-[1,2-Ethanediyl bis (oxy)] bisethanol | 14 | 10 | 68 | 54 | 79 | 0.68 |
| Ethenone | 1[d] | 1[d] | 54[b] | 45[c] | 83[b] | 0.96 |
| 2-Ethylhexanal | 1 | 1 | 54[b] | 45[c] | 83[b] | NA[e] |
| (2-Ethylhexyl) amine | 5 | 4 | 54[b] | 45[c] | 83[b] | 2.10 |
| Ethylmethylbenzene | 1[d] | 1[d] | 54[b] | 45[c] | 83[b] | NA[e] |
| D-Glucitol (70% by weight) | 5 | 5 | 130 | 93 | 72 | 0.70 |
| Heptenes (mixed) | 3 | 3 | 54[b] | 45[c] | 83[b] | 0.22 |
| Hexadecyl chloride | 1 | 1 | 54[b] | 45[c] | 83[b] | 2.46 |
| Hexane | 7 | 6 | 240[b] | 199 | 83[b] | 0.21 |
| Hydrocyanic acid | 12 | 8 | 212[b] | 176 | 83[b] | 0.73 |
| 4-Hydroxy-4-methyl-2-pentanone | 4 | 3 | 148[b] | 123 | 83[b] | 0.64 |
| Iodomethane | 4 | 4 | 54[b] | 45[c] | 83[b] | NA[e] |
| Methanamine | 5 | 4 | 148 | 104 | 70 | 0.74 |

TABLE 9-8 (Continued). U.S. PLANTS, PRODUCERS, CAPACITY, PRODUCTION, CAPACITY UTILIZATION, AND PRICE
Intermediates: General Nonaromatics
1978

| Chemical | Number of plants | Number of producers | Capacity (Gg) | Production (Gg) | Capacity utilization (%) | 1978 price ($/Kg) |
|---|---|---|---|---|---|---|
| Methanol | 12 | 10 | 4,074 | 2,923 | 72 | 0.13 |
| 2-Methyl-2-butene | 1 | 1 | 54[b] | 45[c] | 83[b] | 0.29 |
| 2-Methylbutenes, mixed | 3[a] | 2 | 54[b] | 45[c] | 83[b] | 0.29 |
| Methylmethanamine | 5 | 4 | 54[b] | 45[c] | 83[b] | 0.80 |
| Methyloxirane | 7 | 5 | 1,374 | 929 | 68 | 0.53 |
| 2-Methylpentane | 1 | 1 | 54[b] | 45[c] | 83[b] | NA[e] |
| 2-Methylpropanal | 7 | 5 | 88 | 73[b] | 83[b] | 0.51 |
| 2-Methyl-2-propenoic acid, methyl ester | 7 | 3 | 499 | 367 | 74 | 0.93 |
| 1-Nonene | 5 | 5 | 236[b] | 196 | 83[b] | 0.24 |
| Oxirane | 16 | 12 | 2,699 | 2,273 | 84 | 0.51 |
| Pentenes, mixed | 1[d] | 1[d] | 54[b] | 45[c] | 83[b] | 0.29 |
| Propanal | 3 | 2 | 54[b] | 45[c] | 83[b] | 0.57 |
| Propanoic acid | 4 | 4 | 110 | 91[b] | 83[b] | 0.37 |
| 2-Propanol | 5 | 4 | 1,127 | 785 | 70 | 0.26 |
| 2-Propanone | 20 | 15 | 1,284 | 1,143 | 89 | 0.30 |
| Sodium cyanide | 2 | 2 | 54[b] | 45[c] | 83[b] | 0.88 |
| Tetrabromomethane | 2 | 2 | 547[b] | 454 | 83[b] | NA[e] |
| Tetrachloromethane | 11 | 7 | 695 | 334 | 48 | 0.24 |
| 2,6,6-Trimethylbicyclo[3.1.1]-hept-2-ene | 10 | 7 | 55[b] | 46 | 83[b] | 0.57 |

[a]Estimated on the basis of a group average plant-to-producer ratio of 1.3.

[b]Estimated on the basis of the 1978 chemical industry average capacity utilization rate of 83.0 percent.

[c]Estimated on the assumption that the minimum chemical production level is 45.4 Gg.

[d]No data. Production is assumed to occur at 1 plant and 1 producer.

[e]Price is not available. Chemical is analyzed under a threshold price approach based on the cost of input chemicals.

SOURCES: References 51, 52, and 53.

aromatics, respectively.[51,52,53] Chemicals in these groups do not have major single uses that account for most of their demand.

(II) Synthetic elastomers. The chemicals listed in Table 9-9 are intermediates in the production of synthetic elastomers.[54,55,56] Demand for end uses of synthetic elastomers will determine, therefore, the demand for these products.

In 1979, synthetic elastomers were used for the following products: tires and tubes, 64 percent; industrial and automotive molded goods, 15 percent; and other products, 21 percent.[57] Smaller cars manufactured in Detroit, technological advances in tire production that increase tire durability, and the overall high cost of motor vehicle operation are dampening demand for tires and, therefore, synthetic elastomers and their intermediates.[58]

Producers of synthetic elastomers and their intermediates include tire, chemical, and petroleum companies. Some major producers that are primarily chemical companies include DuPont and Copolymer Rubber and Chemical Company.

(III) Plastics and fibers. The chemicals listed in Table 9-10 are intermediates in the production of plastics and fibers.[59,60,61] The fiber industry is related to the plastics industry in that many plastics and fibers share common resins.

The plastics industry has grown rapidly because plastics have properties that make them suitable for many different end uses. Plastics differ from one another in their functional properties -- flexibility, solubility, resistance to heat and sun, behavior under stress, and clarity. Plastics also differ in price. Polystyrene, for example, is inexpensive compared to fluorocarbon plastics. Finally, plastics differ in terms of processability because of factors such as moldability and extrudability. As a result, each kind of plastic has defined end uses, although in many cases there are uses in which other plastics and materials are competitive substitutes.

Synthetic organic fibers are derived from organic materials. One major class of synthetics is the cellulosic class, which includes rayon and acetates. Cellulosics are said to be semi-synthetics because their production process uses regenerated cellulose obtained from high-purity wood pulp

TABLE 9-9. U.S. PLANTS, PRODUCERS, CAPACITY, PRODUCTION, CAPACITY UTILIZATION, AND PRICE
Intermediates: Synthetic Elastomers
1978

| Chemical | Number of plants | Number of producers | Capacity (Gg) | Production (Gg) | Capacity utilization (%) | 1978 price ($/Kg) |
|---|---|---|---|---|---|---|
| Butadiene and butene fractions | 10[a] | 7 | 264[b] | 219 | 83[b] | 0.43 |
| 1,3-Butadiene | 20 | 15 | 2,212 | 1,594 | 72 | 0.43 |
| 2-Chloro-1,3-butadiene | 3[a] | 2 | 217[b] | 180 | 83[b] | 1.55 |
| 1,4-Dichloro-2-butene | 2 | 2 | 619[b] | 514 | 83[b] | NA[c] |
| 3,4-Dichloro-1-butene | 1 | 1 | 443[b] | 368 | 83[b] | NA[c] |
| 1,6-Hexanediamine | 5 | 3 | 506 | 278 | 55 | 0.59 |
| 1,6-Hexanediamine adipate | 3 | 2 | 499[b] | 414 | 83[b] | 1.16 |
| 1,6-Hexanedinitrile | 6 | 2 | 335 | 278 | 83[b] | NA[c] |
| 2-Methyl-1,3-butadiene | 8 | 7 | 209 | 142 | 68 | 0.34 |
| Propanenitrile | 1[d] | 1[d] | 54[b] | 45[e] | 83[b] | NA[c] |
| 2-Propenenitrile | 6 | 4 | 973 | 795 | 82 | 0.51 |

[a]Estimated on the basis of the group average plant-to-producer ratio of 1.4.

[b]Estimated on the basis of the 1978 chemical industry average capacity utilization rate of 83.0 percent.

[c]Price is not available. Chemical is analyzed under a threshold price approach based on the cost of input chemicals.

[d]No data. Production is assumed to occur at 1 plant and 1 producer.

[e]Estimated on the assumption that the minimum chemical production level is 45.4 Gg.

SOURCES: References 54, 55, and 56.

# TABLE 9-10. U.S. PLANTS, PRODUCERS, CAPACITY, PRODUCTION, CAPACITY UTILIZATION, AND PRICE
## Intermediates: Plastics and Fibers
## 1978

| Chemical | Number of plants | Number of producers | Capacity (Gg) | Production (Gg) | Capacity utilization (%) | 1978 price ($/Kg) |
|---|---|---|---|---|---|---|
| Acetic acid | 10 | 7 | 1,389 | 1,259 | 91 | 0.33 |
| Acetic acid, anhydride | 6 | 4 | 936 | 590 | 63 | 0.53 |
| Benzenamine | 7 | 5 | 399 | 275 | 69 | 0.49 |
| 2,2-Bis(hydroxymethyl)-1,3-propanediol | 4 | 4 | 78 | 55 | 71 | 0.95 |
| Butenes, mixed | 3[b] | 2 | 636[a] | 528 | 83[a] | 0.16 |
| 2-Butenoic acid | 1 | 1 | 54[a] | 45[c] | 83[a] | 1.90 |
| Carbon disulfide | 5 | 4 | 386 | 216 | 56 | 0.18 |
| Chloroethene | 14 | 10 | 3,490 | 3,148 | 90 | 0.29 |
| Cyclohexane | 11 | 9 | 1,394 | 1,058 | 76 | 0.25 |
| 1,3-Cyclopentadiene | 1[d] | 1[d] | 54[a] | 45[c] | 83[a] | NA[e] |
| Dichlorodimethylsilane | 2 | 2 | 54[a] | 45[c] | 83[a] | 2.97 |
| 1,1-Dichloroethene | 3 | 2 | 54[a] | 45[c] | 83[a] | 0.39 |
| 1,3-Diisocyanato-2- (and 4-) methylbenzene (80/20 mixture) | 10 | 8 | 386 | 284 | 74 | 0.95 |
| 1,2-Dimethylbenzene | 12 | 12 | 665 | 459 | 69 | 0.24 |
| 1,3-Dimethylbenzene | 1[f] | 1 | 63[a] | 52 | 83[a] | 0.49 |
| 1,4-Dimethylbenzene | 14 | 12 | 2,073 | 1,595 | 77 | 0.27 |
| 1,1-Dimethylethyl hydroperoxide | 1[d] | 1[d] | 54[a] | 45[c] | 83[a] | NA[e] |
| 2,6-Dimethylphenol | 3 | 3 | 54[a] | 45[c] | 83[a] | 1.42 |
| Ethenylbenzene | 14 | 12 | 4,223 | 3,260 | 77 | 0.38 |
| Ethylbenzene | 19 | 16 | 5,142 | 3,804 | 74 | 0.23 |
| Ethyne | 10 | 6 | 270 | 112 | 41 | 1.47 |
| Formaldehyde (37% by weight) | 53 | 16 | 4,041 | 2,894 | 72 | 0.11 |
| 2,5-Furandione | 10 | 8 | 234 | 155 | 66 | 0.53 |
| Hexahydro-2H-azepin-2-one | 3 | 3 | 510 | 417 | 82 | 1.14 |
| Hexanedioic acid | 5 | 4 | 866 | 735 | 85 | 0.92 |
| 2-Hexenedinitrile | 2 | 1 | 369[a] | 306 | 83[a] | NA[e] |
| 3-Hexenedinitrile | 1[d] | 1[d] | 54[a] | 45[c] | 83[a] | NA[e] |
| 3-Hydroxybutyraldehyde | 1 | 1 | 54[a] | 45[c] | 83[a] | NA[e] |
| 4-Methyl-1,3-benzenediamine | 11 | 6 | 76[a] | 63 | 83[a] | 1.12 |
| ar-Methylbenzenediamine | 2 | 2 | 54[a] | 45[c] | 83[a] | NA[e] |
| 1-Methyl-2,4-dinitrobenzene (and 2-methyl-1,3-dinitrobenzene) | 4 | 3 | 359[a] | 298 | 83[a] | 0.47 |
| 1-Methyl-2,4-dinitrobenzene | 4 | 4 | 359[a] | 298 | 83[a] | 1.26 |
| 4,4'-(1-Methylethylidene)bisphenol | 4 | 4 | 268 | 214 | 80 | 0.77 |
| 1-Methyl-1-phenylethyl hydroperoxide | 5 | 5 | 2,376[a] | 1,972 | 83[a] | NA[e] |
| 2-Methyl-1-propene | 15 | 9 | 551 | 464 | 84 | 0.33 |
| 2-Methyl-2-propenenitrile | 1[d] | 1[d] | 54[a] | 45[c] | 83[a] | NA[e] |
| Nitrobenzene | 7 | 6 | 516 | 261 | 51 | 0.46 |

TABLE 9-10 (Continued). U.S. PLANTS, PRODUCERS, CAPACITY, PRODUCTION, CAPACITY UTILIZATION, AND PRICE
Intermediates: Plastics and Fibers
1978

| Chemical | Number of plants | Number of producers | Capacity (Gg) | Production (Gg) | Capacity utilization (%) | 1978 price ($/Kg) |
|---|---|---|---|---|---|---|
| 2,2'-Oxybisethanol | 18 | 13 | 214 | 169 | 79 | 0.37 |
| 3-Pentenenitrile | 1[d] | 1[d] | 54[a] | 45[c] | 83[a] | NA[e] |
| 1-Phenylethyl hydroperoxide | 1[d] | 1[d] | 54[a] | 45[c] | 83[a] | NA[e] |
| 1,2-Propanediol | 6 | 5 | 388 | 248 | 64 | 0.53 |
| 2-Propenoic acid | 3 | 3 | 179 | 147 | 82 | 0.71 |
| 1,3,5,7-Tetraazatricyclo-[3.3.1.1$^{3,7}$]decane | 6 | 6 | 68 | 56[a] | 83[a] | 0.66 |
| 1,3,5-Triazine-2,4,6-triamine | 3 | 3 | 77 | 51 | 66 | 0.79 |
| 1,1,1-Tribromo-2-methyl-2-propanol | 1[d] | 1[d] | 54[a] | 45[c] | 83[a] | NA[e] |

[a]Estimated on the basis of the 1978 chemical industry average capacity utilization rate of 83.0 percent.
[b]Estimated on the basis of the group average plant-to-producer ratio of 1.4.
[c]Estimated on the assumption that the minimum chemical production level is 45.4 Gg.
[d]No data. Production is assumed to occur at 1 plant and 1 producer.
[e]Price is not available. Chemical is analyzed under a threshold price approach.
[f]Chemical has 1 producer. Producer is assumed to have 1 plant.

SOURCES: References 59, 60, and 61.

or cotton. The second major class of synthetics is the pure synthetics class, which includes polyester, nylon, and acrylics. These are manufactured via chemical processes that involve substantial chemical conversion to produce the final molecules. All synthetic organic fibers contain carbon, which provides the basis for the linkages that allow long polymer molecules to form.

The largest volume synthetic fiber, polyester, accounts for 45 percent of all synthetic fiber production. Nylon accounts for 29 percent of total fiber production, while acrylics, polyolefins, and rayon each are responsible for 8 percent of fiber production.[62]

Growth in the synthetic fibers industry will continue, albeit at a slower pace. Synthetic fibers are expected to penetrate the market for natural fibers at a decreasing rate[63] and the big markets for fibers, construction and transportation, currently are in a recession. The markets for synthetic fibers are divided almost equally among industrial and other consumer goods, home furnishings, and apparel.[64]

(IV) Plasticizers. Plasticizers are used to facilitate processing of polymers and resins and to increase the flexibility and toughness of plastics. By reducing the viscosity of resins, plasticizers enhance their moldability at elevated temperatures and pressures.

Over two thirds of aggregate plasticizer production is used in the manufacture of an otherwise brittle synthetic polymer, polyvinyl chloride (PVC).[65] Plasticizers transform PVC into a highly flexible and, thus, workable resin. The demand for plasticizers is linked to the demand for PVC.

The biggest market for PVC is the building and construction industry. Pipe and tubing consumes about 40 percent of PVC production, while other major uses include: flooring and textiles, 11 percent, and coatings and paste processes, 11 percent. PVC also is used in the manufacture of wire and cables, phonograph records, furniture upholstery, and miscellaneous moldings. Despite the slowdown in housing starts, demand for PVC is expected to grow at a rate of 7 percent per year through 1984.[66]

The future demand for plasticizers in PVC production is uncertain. Although more than two thirds of PVC production uses plasticizers, rigid

vinyls, which use little or no plasticizers for their production, are growing much faster than flexible vinyls.[67]

Table 9-11 presents data on the plasticizers in the organic chemical industry.[68,69,70] It is not surprising that the prices for many plasticizers are similar because they are interchangeable in most applications.

(V) Pesticides. Pesticides are chemicals used to kill weeds, fungi, insects, and other undesirable organisms, predominantly those that interfere with the growth and storage of crops. Therefore, the major user of pesticides is the agricultural sector. Table 9-12 shows the organic chemicals that are intermediates in pesticide production.[71,72,73]

Pesticides have enjoyed the high growth rate of 11.5 percent per year from 1968 through 1978.[74] With the amount of cropland limited, farmers depend on pesticides to increase crop yields per hectare. The future annual growth rate for pesticides is expected to slow down considerably.[75] Factors hindering future growth include bans on products due to environmental effects and resistance to some products by insects.

(VI) Dyes. Dyes are used to color fabrics and other materials. As a result, the sales of dyes parallel the sales of the textile industry, its largest consumer. Approximately two thirds of dye use is by the textile industry, while other uses include coloring paper, dyeing leather and plastics, and producing organic pigments.[76]

Table 9-13 lists the organic chemicals that are intermediates in the production of dyes.[77,78,79] The annual rate of growth of the dye industry has decreased to about 1.9 percent, which suggests a similar growth rate for these intermediate products.[80]

9.1.1.8.3 Solvents. A solvent is a substance used to dissolve other substances. The major uses of solvents are in paints, varnishes, lacquers, printing inks, rubber processing, and pharmaceuticals. Growth in solvent use is projected at 4.7 percent per year.[81] Table 9-14 lists the organic solvent chemicals.[82,83,84]

9.1.1.8.4 Detergents and Surfactants. Surfactants are used to reduce the surface tension of water and other solvents. Surfactants wet surfaces, remove and suspend dirt, penetrate porous materials, and emulsify. These products, therefore, are used most commonly as detergents for household and

TABLE 9-11. U.S. PLANTS, PRODUCERS, CAPACITY, PRODUCTION, CAPACITY UTILIZATION, AND PRICE
Intermediates: Plasticizers
1978

| Chemical | Number of plants | Number of producers | Capacity (Gg) | Production (Gg) | Capacity utilization (%) | 1978 price ($/Kg) |
|---|---|---|---|---|---|---|
| 1,3-Benzenedicarboxylic acid | 1 | 1 | 109 | 45 | 41 | 0.65 |
| 1,4-Benzenedicarboxylic acid | 3 | 2 | 930 | 918 | 99 | 0.45 |
| 1,4-Benzenedicarboxylic acid dimethyl ester | 6 | 4 | 1,887 | 1,863 | 99 | 0.45 |
| 1,2-Benzenedicarboxylic acid, bis (2-ethylhexyl) ester | 10 | 9 | 213[a] | 177 | 83[a] | 0.68 |
| 1,2-Benzenedicarboxylic acid, butyl, phenylmethyl ester | 2 | 1 | 54[a] | 45[b] | 83[a] | 0.82 |
| 1,2-Benzenedicarboxylic acid, di-n-heptyl-n-nonyl undecyl ester | 1 | 1 | 54[a] | 45[b] | 83[a] | 0.69 |
| 1,2-Benzenedicarboxylic acid, diisodecyl ester | 6 | 6 | 84[a] | 70 | 83[a] | 0.62 |
| 1,2-Benzenedicarboxylic acid, diisononyl ester | 1 | 1 | 54[a] | 45[b] | 83[a] | 0.62 |
| 1,2-(and 1,3-)Butanediol | 2 | 2 | 54[a] | 45[b] | 83[a] | 0.90 |
| Butanal | 6 | 5 | 428[a] | 355 | 83[a] | 0.40 |
| 2-Ethyl-1-hexanol | 5 | 5 | 293 | 191 | 65 | 0.46 |
| 1,3-Isobenzofurandione | 11 | 9 | 603 | 444 | 74 | 0.53 |
| Linear alcohols, ethoxylated, mixed | 21 | 15 | 54[a] | 45[b] | 83[a] | NA[c] |
| 6-Methyl heptanol | 2 | 2 | 54[a] | 45[b] | 83[a] | 0.51 |
| 1-Nonanol | 1 | 1 | 54[a] | 45[b] | 83[a] | NA[c] |
| Octene | 4 | 4 | 54[a] | 45[b] | 83[a] | 0.62 |

[a]Estimated on the basis of the 1978 chemical industry average capacity utilization rate of 83.0 percent.

[b]Estimated on the assumption that the minimum chemical production level is 45.4 Gg.

[c]Price is not available. Chemical is analyzed under the threshold price approach based on the cost of input chemicals.

SOURCES: References 68, 69, and 70.

TABLE 9-12. U.S. PLANTS, PRODUCERS, CAPACITY, PRODUCTION, CAPACITY UTILIZATION, AND PRICE
Intermediates: Pesticides
1978

| Chemical | Number of plants | Number of producers | Capacity (Gg) | Production (Gg) | Capacity utilization (%) | 1978 price ($/Kg) |
|---|---|---|---|---|---|---|
| 1,1'-Biphenyl | 8 | 7 | 54[a] | 45[b] | 83[a] | 0.53 |
| 6-Chloro-N-ethyl-N'-(1-methylethyl) -1,3,5-triazine-2,4-diamine | 3 | 3 | 54[a] | 45[b] | 83[a] | 4.01 |
| 2-Hydroxy-2-methylpropanenitrile | 3 | 3 | 505[a] | 419 | 83[a] | NA[c] |
| 2,4,6-Trichloro-1,3,5-triazine | 4 | 2 | 54[a] | 45[b] | 83[a] | NA[c] |

[a]Estimated on the basis of the 1978 chemical industry average capacity utilization rate of 83.0 percent.

[b]Estimated on the assumption that the minimum chemical production level is 45.4 Gg.

[c]Price is not available. Chemical is analyzed under a threshold price approach based on the cost of input chemicals.

SOURCES: References 71, 72, and 73.

TABLE 9-13. U.S. PLANTS, PRODUCERS, CAPACITY, PRODUCTION, CAPACITY UTILIZATION, AND PRICE
Intermediates: Dyes
1978

| Chemical | Number of plants | Number of producers | Capacity (Gg) | Production (Gg) | Capacity utilization (%) | 1978 price ($/Kg) |
|---|---|---|---|---|---|---|
| 1-Chloro-4-nitrobenzene | 1 | 1 | 54[a] | 45[b] | 83[a] | 0.99 |
| 6-Ethyl-1,2,3,4-tetrahydro-9,10-anthracenedione | 1[c] | 1[c] | 54[a] | 45[b] | 83[a] | NA[d] |

[a]Estimated on the basis of the 1978 chemical industry average capacity utilization rate of 83.0 percent.

[b]Estimated on the assumption that the minimum chemical production level is 45.4 Gg.

[c]No data. Production is assumed to occur at 1 plant and 1 producer.

[d]Price is not available. Chemical is analyzed under a threshold price approach based on the cost of input chemicals.

SOURCES: References 77, 78, and 79.

TABLE 9-14. U.S. PLANTS, PRODUCERS, CAPACITY, PRODUCTION, CAPACITY UTILIZATION, AND PRICE
Solvents
1978

| Chemical | Number of plants | Number of producers | Capacity (Gg) | Production (Gg) | Capacity utilization (%) | 1978 price ($/Kg) |
|---|---|---|---|---|---|---|
| Acetic acid, ethyl ester (85%) | 8 | 5 | 127 | 83 | 65 | 0.42 |
| 2-Butanone | 7 | 6 | 386 | 300 | 78 | 0.42 |
| 2-Butoxyethanol | 4 | 4 | 112 | 86 | 77 | 0.66 |
| 1,2-Dichloroethane | 17 | 11 | 6,502 | 4,990 | 77 | 0.18 |
| Dichloromethane | 7 | 5 | 372 | 259 | 70 | 0.51 |
| 1,3-Dichloro-2-propanol | 2 | 2 | 264[a] | 219 | 83[a] | NA[c] |
| Ethanol | 13 | 11 | 1,070 | 575 | 54 | 0.37 |
| 2-Ethoxyethanol | 5 | 5 | 218[a] | 181 | 83[a] | 0.60 |
| 2-Ethoxyethyl acetate | 1 | 1 | 54[a] | 45[b] | 83[a] | 0.74 |
| 2-Methoxyethanol | 7 | 7 | 68 | 52 | 76 | 0.62 |
| 4-Methyl-2-pentanone | 5 | 4 | 128[b] | 106 | 83[a] | 0.60 |
| 4-Methyl-3-penten-2-one | 4 | 3 | 54[a] | 45[b] | 83[a] | 0.71 |
| 2-Methyl-1-propanol | 7 | 6 | 83 | 66 | 80 | 0.29 |
| 2-Methyl-2-propanol | 2 | 2 | 547 | 454 | 83[a] | 0.58 |
| 1,2,3-Propanetriol | 4 | 3 | 118 | 61 | 52 | 1.12 |
| 1-Propanol | 3 | 3 | 88[a] | 73 | 83[a] | 0.53 |
| 1,1,2,2-Tetrachloroethane | 1 | 1 | 54[a] | 45[b] | 83[a] | 0.59 |
| Tetrachloroethene | 11 | 8 | 558 | 329 | 59 | 0.27 |
| Tetrahydrofuran | 3 | 3 | 54[a] | 45 | 83[a] | 1.65 |
| 1,1,1-Trichloroethane | 3 | 3 | 313 | 292 | 93 | 0.46 |
| 1,1,2-Trichloroethane | 3 | 3 | 54[a] | 45[b] | 83[a] | 0.71 |
| Trichloroethene | 5 | 5 | 261 | 136 | 52 | 0.35 |

[a]Estimated on the basis of the 1978 chemical industry average capacity utilization rate of 83.0 percent.

[b]Estimated on the assumption that the minimum chemical production level is 45.4 Gg.

[c]Price is not available. Chemical is analyzed under a threshold price approach based on the cost of input chemicals.

SOURCES: References 82, 83, and 84.

commercial use. Table 9-15 presents the organic chemicals classified as surfactants.[85,86,87]

One source projects market growth for surfactants at an average annual rate of 2 percent through 1990.[88] This rate is not much lower than the 2.7 percent annual rate at which production increased in the years 1970 through 1980.[89] Slow growth for surfactants can be attributed to a mature industry that has penetrated all markets.

Many of the major chemical companies produce surfactants and are involved in all stages of surfactant production. Some smaller producers, however, purchase the raw material necessary for surfactant production and focus their efforts on the final production process that requires low capital investment.[90]

9.1.1.8.5 Fuel additives. Table 9-16 shows organic chemicals classified as fuel additives.[91,92,93] These products increase the efficiency of fossil fuel combustion, aid in fuel handling, decrease smoke and particulate emissions in the combustion of fuels, or help to boost octane levels. A particularly fast-growing fuel additive has been methyl t-butyl ether (MTBE), which has increased in production from almost nothing in the mid-1970s to approximately 800 Gg in 1982. MTBE is used as an octane-boosting agent in gasoline.[94]

9.1.1.8.6 Aerosol propellants and refrigerants. The chemicals listed in Table 9-17 are largely fluorocarbons, which have two major applications: aerosol propellants and refrigerants.[95,96,97]

Before 1974, aerosol propellants consumed approximately 50 percent of fluorocarbon production.[98] Concern over the environmental effects of fluorocarbons caused production of aerosols to drop off after 1973. In 1978, production of aerosols began increasing after decreasing 26 percent from 1973 through 1977.[99] Contributing to the increase in aerosols production is the replacement of chlorofluorocarbons by other, less harmful propellants. However, by 1985, aerosols are predicted to account for only 20 percent of total fluorocarbon consumption.[100] Propellants such as isobutane will become more important in the propellants industry.

The second largest use of fluorocarbons is as refrigerants; in 1978, 35 percent of fluorocarbon production went for this use.[101] The demand for fluorocarbon refrigerants is tied to the automobile and construction

TABLE 9-15. U.S. PLANTS, PRODUCERS, CAPACITY, PRODUCTION, CAPACITY UTILIZATION, AND PRICE
Detergents and Surfactants
1978

| Chemical | Number of plants | Number of producers | Capacity (Gg) | Production (Gg) | Capacity utilization (%) | 1978 price ($/Kg) |
|---|---|---|---|---|---|---|
| 2-Aminoethanol | 5 | 4 | 66 | 60 | 91 | 0.71 |
| Benzenesulfonic acid, mono-$C_{10-16}$-alkyl derivatives, sodium salts | 1[a] | 1[a] | 54[b] | 45[c] | 83[b] | NA[d] |
| Coconut oil acids, sodium salt | 11 | 6 | 89[b] | 74 | 83[b] | 0.51 |
| Dodecylbenzene, linear | 4 | 4 | 293 | 239 | 82 | 0.65 |
| Dodecylbenzene, nonlinear | 3 | 3 | 169[b] | 140 | 83[b] | 0.65 |
| Dodecylbenzenesulfonic acid | 29 | 16 | 111[b] | 92 | 83[b] | 0.68 |
| Dodecylbenzenesulfonic acid, sodium salt | 39 | 24 | 170[b] | 141 | 83[b] | 0.60 |
| Fatty acids, tall oil, sodium salt | 4 | 4 | 54[b] | 45[c] | 83[b] | 0.64 |
| 2,2'-Iminobisethanol | 5 | 4 | 66 | 53 | 80 | 0.77 |
| Isodecanol | 2 | 2 | 81[b] | 67 | 83[b] | 0.52 |
| Linear alcohols, ethoxylated and sulfated, sodium salt, mixed | 12 | 8 | 54[b] | 45[c] | 83[b] | 0.73 |
| Linear alcohols, sulfated, sodium salt, mixed | 4 | 4 | 54[b] | 45[c] | 83[b] | 1.74 |
| 2,2',2"-Nitrolotrisethanol | 5 | 4 | 66 | 52 | 79 | 0.82 |
| Nonylphenol | 13 | 10 | 140 | 57 | 41 | 0.51 |
| Nonylphenol, ethoxylated | 20 | 15 | 112[b] | 93 | 83[b] | 0.73 |
| Oil-soluble petroleum sulfonate, calcium salt | 7 | 5 | 151[b] | 125 | 83[b] | 1.15 |
| Oil-soluble petroleum sulfonate, sodium salt | 6 | 4 | 71[b] | 59 | 83[b] | 0.66 |
| Tallow acids, potassium salt | 1 | 1 | 54[b] | 45[c] | 83[b] | 0.63 |
| Tallow acids, sodium salt | 16 | 10 | 196[b] | 163 | 83[b] | 0.63 |

[a]No data. Production is assumed to occur at 1 plant and 1 producer.

[b]Estimated on the basis of the 1978 chemical industry average 83.0 percent capacity utilization rate.

[c]Estimated on the assumption that the minimum chemical production level is 45.4 Gg.

[d]Price is not available. Chemical is analyzed under a threshold price approach based on the cost of input chemicals.

SOURCES: References 85, 86, and 87.

TABLE 9-16. U.S. PLANTS, PRODUCERS, CAPACITY, PRODUCTION, CAPACITY UTILIZATION, AND PRICE
Fuel Additives
1978

| Chemical | Number of plants | Number of producers | Capacity (Gg) | Production (Gg) | Capacity utilization (%) | 1978 price ($/Kg) |
|---|---|---|---|---|---|---|
| Heptane | 7 | 6 | 54[a] | 45[b] | 83[a] | 0.20 |
| Methyl t-butyl ether | 9 | 9 | 1,360 | 770 | 57 | 0.17 |
| Tetraethylplumbane | 6 | 4 | 180[a] | 149 | 83[a] | 2.38 |
| Tetra (methylethyl) plumbane | 6 | 4 | 201[a] | 167 | 83[a] | 2.34 |
| Tetramethylplumbane | 6 | 4 | 531[a] | 441 | 83[a] | 2.34 |

[a]Estimated on the basis of the 1978 chemical industry average capacity utilization rate of 83.0 percent.
[b]Estimated on the assumption that the minimum chemical production level is 45.4 Gg.

SOURCES: References 91, 92, and 93.

TABLE 9-17. U.S. PLANTS, PRODUCERS, CAPACITY, PRODUCTION, CAPACITY UTILIZATION, AND PRICE
Aerosol Propellants and Refrigerants
1978

| Chemical | Number of plants | Number of producers | Capacity (Gg) | Production (Gg) | Capacity utilization (%) | 1978 price ($/Kg) |
|---|---|---|---|---|---|---|
| Dichlorodifluoromethane | 10 | 4 | 178[a] | 148 | 83[a] | 0.95 |
| Dichlorofluoromethane | 2 | 1 | 266[a] | 221 | 83[a] | 1.01 |
| Trichlorofluoromethane | 9 | 3 | 106 | 88 | 83[a] | 0.75 |
| 1,1,2-Trichloro-1,2,2-trifluoroethane | 3 | 2 | 54[a] | 45[b] | 83[a] | 1.34 |

[a]Estimated on the basis of the 1978 chemical industry average capacity utilization rate of 83.0 percent.

[b]Estimated on the assumption that the minimum chemical production level is 45.4 Gg.

SOURCES: References 95, 96, and 97.

industries. Fluorocarbons also are used as blowing agents and as plastics materials.

9.1.1.8.7 Coatings and miscellaneous end-use chemicals. Table 9-18 shows chemicals that are used as coatings, and Table 9-19 lists chemicals that have miscellaneous end uses.[102,103,104]

9.1.1.9 Petroleum Refineries. Since basic chemicals and some intermediates are produced in petroleum refineries, characteristics of the petroleum refining industry are discussed also. As shown in Table 9-20, there were 273 refineries in the U.S. in 1982.[105-110] The average refinery had a capacity of 10,800 $m^3$ per stream day.

Refineries produce primarily gasoline, distillate fuel oil, residual fuel oil, and jet fuel. As shown in Table 9-21, these products accounted for 83 percent of all refinery products in 1981.[111] Petrochemical feedstocks (basic chemicals) accounted for approximately 5 percent of yields.

Refineries generally are owned by oil companies, many of which are large and have integrated operations, spanning from crude oil exploration and production through marketing of gasoline and oil products. The refining industry at times has had high earnings. In 1981, for example, the largest 8 oil companies had after-tax profits equal to 17.9 percent of equity, while a large sample of manufacturing companies in all industries had profits of 14.0 percent.[112,113]

In this BID, chemicals produced primarily by refineries (particularly basic chemicals) are assumed to incur no control costs as a result of the standards. Refineries are assumed to adopt controls for VOC emissions from distillation of such chemicals even in the absence of NSPS on distillation processes.

9.1.2 Projections of New Plants

In the five year period beginning November 1, 1982, approximately 600 chemical plants using distillation columns are projected to be built by the organic chemical industry. This projection is derived using the equation presented in Table 9-22. As used in this chapter, the term "plant" refers to any operation engaged in the production of one of the 219 organic chemicals. Thus, a producer that owns one installation producing five chemicals is considered to be operating five "plants" (i.e., one for each chemical).

TABLE 9-18. U.S. PLANTS, PRODUCERS, CAPACITY, PRODUCTION, CAPACITY UTILIZATION, AND PRICE
Coatings
1978

| Chemical | Number of plants | Number of producers | Capacity (Gg) | Production (Gg) | Capacity utilization (%) | 1978 price ($/Kg) |
|---|---|---|---|---|---|---|
| Acetic acid, butyl ester | 5 | 4 | 66[a] | 55 | 83[a] | 0.57 |
| Acetic acid, ethenyl ester | 7 | 6 | 924[a] | 767 | 83[a] | 0.40 |
| 2-Propenoic acid, butyl ester | 5 | 4 | 219 | 127 | 58 | 0.79 |
| 2-Propenoic acid, ethyl ester | 5 | 4 | 234 | 136 | 58 | 0.66 |

[a]Estimated on the basis of the 1978 chemical industry average capacity utilization rate of 83.0 percent.

SOURCES: References 102, 103, and 104.

TABLE 9-19. U.S. PLANTS, PRODUCERS, CAPACITY, PRODUCTION, CAPACITY UTILIZATION, AND PRICE
Miscellaneous End-Use Chemicals
1978

| Chemical | Number of plants | Number of producers | Capacity (Gg) | Production (Gg) | Capacity utilization (%) | 1978 price ($/Kg) |
|---|---|---|---|---|---|---|
| Cyclopropane | 1 | 1 | 54[a] | 45[b] | 83[a] | NA[c] |
| 1,2-Ethanediol | 17 | 13 | 3,084 | 1,771 | 57 | 0.37 |
| 2-Hydroxy-1,2,3-propanetricarboxylic acid | 5 | 2 | 147 | 115 | 78 | 1.37 |
| Tribromomethane | 1 | 1 | 54[a] | 45[b] | 83[a] | 2.58 |
| Trichloromethane | 7 | 5 | 234 | 158 | 68 | 0.49 |
| Urea | 47 | 34 | 6,802 | 5,690 | 84 | 0.14 |
| Urea ammonium nitrate | 1[d] | 1[d] | 54[a] | 45[b] | 83[a] | 0.13 |

[a]Estimated on the basis of the 1978 chemical industry average capacity utilization rate of 83.0 percent.

[b]Estimated on the assumption that the minimum chemical production level is 45.4 Gg.

[c]Price is not available. Chemical is analyzed under a threshold price approach based on the cost of input chemicals.

[d]No data. Production is assumed to occur at one plant and 1 producer.

SOURCES: References 102, 103, and 104.

TABLE 9-20. TOTAL AND AVERAGE CRUDE DISTILLATION CAPACITY BY YEAR[a]
United States Refineries
1978-1982

| Year (January 1) | Number of refineries | Total capacity ($m^3$/sd) | Average refinery capacity ($m^3$/sd) |
|---|---|---|---|
| 1978 | 285 | 2,801,000 | 9,800 |
| 1979 | 289 | 2,870,000 | 9,900 |
| 1980 | 297 | 2,975,000 | 10,000 |
| 1981 | 303 | 3,080,000 | 10,200 |
| 1982 | 273 | 2,957,000 | 10,800 |

[a]Capacity in stream days.

SOURCES: References 105, 106, 107, 108, 109, and 110.

TABLE 9-21. PRODUCT YIELDS OF REFINERIES IN THE U.S.
1981
(Percent of input volume)

| Product | Yield |
|---|---|
| Motor gasoline | 44.5 |
| Jet fuel | 7.9 |
| Ethane | 0.1 |
| Liquefied gases | 2.4 |
| Kerosene | 0.9 |
| Distillate fuel oil | 20.5 |
| Residual fuel oil | 10.4 |
| Petrochemical feedstocks | 4.5 |
| Special naphthas | 0.6 |
| Lubricants | 1.3 |
| Wax | 0.1 |
| Coke | 3.1 |
| Asphalt | 2.7 |
| Road oil | 0.1 |
| Still gas | 4.5 |
| Miscellaneous | 0.7 |
| Processing gain[a] | -4.0 |
| Total | 100.0 |

[a]Represents the arithmetic difference between input and production, reflecting the fact that refining products have a greater volume than crude oil.

SOURCE: Reference 111.

TABLE 9-22. EQUATIONS FOR PROJECTING NEW CAPACITY AND PLANTS FOR THE ORGANIC CHEMICAL INDUSTRY
219 Distillation Chemicals
United States
November 1, 1982 - November 1, 1987

---

1) $FP_{1987} = (1+r)^9 \times PP$

2) $FP_{1982} = (1+r)^4 \times PP$

3) $NP = FP_{1987} - FP_{1982}$

4) $TP = NP + RP$

Where:

r = Growth rate for each group. These rates are based upon the weighted averages among chemicals (in terms of relative capacities of chemicals within each group). The growth rates are based on rates in Chemical Marketing Reporter, which bases its estimates on patterns found in surveys of chemical producers (and, to a lesser extent, consultants and other sources).

| | |
|---|---|
| Basic chemicals | 4.5% |
| Intermediates for: | |
| General aromatics | 4.5% |
| General non-aromatics | 4.1% |
| Synthetic elastomers | 3.0% |
| Plastics and fibers | 2.0% |
| Plasticizers | 4.1% |
| Pesticides | 5.0% |
| Dyes | 1.9% |
| Solvents | 4.7% |
| Detergents and surfactants | 2.9% |
| Fuel additives | 2.5% |
| Aerosol propellants and refrigerants | 3.0% |
| Coatings | 6.7% |
| Miscellaneous end-use chemicals | 3.9% |

PP = "Present plants." The number of plants in existence as of November 1978 (see Tables 9-6 through 9-19, and the note at the end of this table).

$FP_{1987}$ = "Future plants in 1987." The number of plants projected to be in existence as of November 1987.

$FP_{1982}$ = "Future plants in 1982." The number of plants projected to be in existence as of November 1982.

NP = "New plants." The number of plants expected to be added by group producers in response to growth in demand from November 1982 through November 1987.

TABLE 9-22 (Continued). EQUATIONS FOR PROJECTING NEW CAPACITY AND PLANTS FOR THE ORGANIC CHEMICAL INDUSTRY
219 Distillation Chemicals
United States
November 1, 1982 - November 1, 1987

RP = "Replacement plants." The number of plants projected to be built to replace retired capacity in the five-year period from November 1982 to November 1987.

TP = "Total plants." The total number of plants projected to be built during the five-year period from November 1982 to November 1987.

NOTE: Data on numbers of plants and aggregate capacities for producing chemicals are listed in Tables 9-6 through 9-19. Most of the figures represent published statistics from sources like SRI's Directory of Chemical Producers in the United States. In some cases, however, complete information was not available and several techniques were used to estimate proxy numbers of the figures on existing plants and capacity.

When there was information on the number of firms producing a chemical but not on the number of plants, the number of plants was multiplied by the average ratio of plants to producers found among chemicals with data in the same chemical group. The average plant-to-producer ratio ranges from 1.0 among dyes to 2.4 among aerosol propellants and refrigerants, and is 1.3 for all chemicals in composite.

When information was known on total capacity but not on the number of plants or producers, capacity was divided by the average plant size among chemicals in the same chemical group.

Existing plants, known and estimated, were counted in whole numbers. New and replacement plant projections were made in decimal fractions and summed to chemical group totals before rounding to whole numbers.

SOURCE: References 114 and 115.

Several assumptions underlie the projection. First, capacity is assumed to grow at the same rate as production during the five-year period. Annual growth rates for production are identified by chemical group in Table 9-22 and range from a low of 1.9 percent for dyes to a high of 6.7 percent for coatings, as projected by Chemical Marketing Reporter.[114] The projections published by Chemical Marketing Reporter are based upon surveys of chemical producers (and, in some cases, consultants and other sources); a general estimate is reached for each chemical based upon the patterns shown by the survey results.[115]

The assumption implies that the capacity utilization rate remains constant throughout the period. The 1978 capacity utilization rate was 83 percent for the chemical industry as a whole. This 1978 rate is within 2 percentage points of the industry-wide 10-year average from 1969 through 1978, which was about 81 percent.[116]

The median growth rate used in the projections is 4.1 percent. Although the current recession has led to severe reductions in the rate of capacity utilization among producers of many organic chemicals, implying that new capacity additions will not be needed immediately, the rates used in the growth projections are representative of long-term growth trends for chemicals and, therefore, provide a representative basis for projecting trends of plant construction that would be affected by NSPS in the future.

Second, plants are assumed to have an operating life of 20 years.[117] In the five-year period after November 1, 1982, capacity constructed in the period from November 1, 1962, to November 1, 1967, is assumed to be retired. Capacity added during this earlier period has been identified from Chemical Engineering's "Construction Alert." The retired capacity would be replaced and would not fall under the category of modifications and reconstructions of existing plants (see Chapter 5). It is assumed that no modifications or reconstructions will occur in the five-year period. No plants are expected to reconstruct or change columns to the point of investing more than 50 percent of the replacement costs of the columns.

Third, the size of new plants is assumed to be the same as the average size of present plants. This assumption tends to overstate the number of plants because many new plants are larger than average existing plants (reflected in the size of plants built in the past).[118-127]

The growth rates in Table 9-22 are used to project both the number of plants expected to exist in November 1982 and the number of plants in November 1987. The number of plants in 1982 then is subtracted from the number of plants in 1987 to arrive at the number of new plants projected to be built from November 1982 to November 1987 in the group. The number of plants anticipated to replace retiring plants during the five-year period is added to the number of new plants to calculate the total number of plants expected to be added during the period.

Table 9-23 presents the projected number of new and replacement plants for each group. New plants are projected to total 393 and replacement plants 212. This converts to 1,200 new and replacement distillation units (see page 7-2). It is assumed that growth among plants in SIP states will take place at the same pace as growth in non-SIP states. Hence, separate projections for SIP and non-SIP plants are not needed.

These projections are based on the assumptions described above. While the projections are as accurate as data permit, changes in the general state of the economy, technological advances, development of competitive substitutes, discovery of new product uses, and changes in the stability of markets may affect actual industry growth. Such occurrences are difficult to anticipate. These projections reflect the most probable scenario and are the best possible given the data available.

Even if subsequent events prove the projections wrong, they remain valid for their intended purpose: a guide in exploring the future costs and other impacts of NSPS. Indeed, reasonable variations in the projection of affected facilities would have no effect on the need for, and selection of, a standard.

## 9.2 CHEMICAL SCREENING ANALYSIS

The main tool in the economic analysis is a screening. A screening is used because of the large number of chemicals (219) affected by the NSPS and the fact that control costs for most of the chemicals are small in relation to plant resources and sales. The screening uses a price impact criterion, discussed in Section 9.2.1, to categorize chemicals in terms of the severity of potential impacts for their producers or consumers.

In Section 9.2.2, characteristics of the control costs used in the screening are summarized. Worst-case costs are based upon the technical

TABLE 9-23. PROJECTED NUMBER OF NEW AND REPLACEMENT DISTILLATION PLANTS IN THE ORGANIC CHEMICAL INDUSTRY BETWEEN NOVEMBER 1982 AND NOVEMBER 1987

| Groups | New plants | Replacement plants | Total plants to be added |
|---|---|---|---|
| Basic chemicals | 102 | 64 | 166 |
| Intermediates for: | | | |
| General aromatics | 20 | 1 | 21 |
| General non-aromatics | 84 | 29 | 113 |
| Synthetic elastomers | 12 | 5 | 17 |
| Plastics and fibers | 37 | 36 | 73 |
| Plasticizers | 21 | 3 | 24 |
| Pesticides | 6 | 2 | 8 |
| Dyes | 0 | 0 | 0 |
| Solvents | 38 | 12 | 50 |
| Detergents and surfactants | 32 | 40 | 72 |
| Fuel additives | 5 | 0 | 5 |
| Aerosol propellants and refrigerants | 4 | 7 | 11 |
| Coatings | 11 | 3 | 14 |
| Miscellaneous end-use chemicals | 21 | 10 | 31 |
| Total | 393 | 212 | 605 |

plant characteristics described in Chapter 8, and also include costs that are rolled through in cases where input chemicals are also covered by the standards. Economic plant characteristics (production and sales) are presented in Section 9.2.3.

The results of the screening are summarized in Section 9.2.4. Appendix I presents the data used and the potential price impact results for each of the 219 chemicals.

9.2.1 Screening Criterion

A screening is conducted to measure control costs in relation to prices of chemicals. The following criterion is used to screen chemicals that would not have significant costs of control from those that would:

> If the worst-case annualized cost of control for a chemical would be greater than 5 percent of the chemical's projected 1987 market price, that chemical would need further examination for economic impacts.

The five percent level has been used because it is a generally accepted criterion for determining if a price increase is significant. Chemicals whose worst-case price increase would be less than 5 percent are not examined in depth in the economic analysis, as it is assumed that a price change (or the equivalent cost increase) of less than 5 percent would be small, given the tendencies to overstate costs when the worst-case assumptions (explained below) are used.

An increase in chemical prices of less than 5 percent represents a limited degree of change for chemical producers. In the five year period from 1973 to 1978, the base year for this analysis, the index of prices for Chemicals and Allied Products increased by an average of 4.9 percent per year (in 1978 value dollars).[128] Accordingly, the screening criterion indicates a price increase no greater than a single year's average inflation for the chemical industry in recent years. While no cost increase is desirable, an increase of less than 5 percent falls within a range that the industry and its customers have already experienced.

9.2.2 Control Costs for the Screening

The economic analysis is conducted in two parts using two sets of assumptions on pollution control costs. In this section, a chemical-specific screening examines each of the 219 chemicals for their potential price increases if control costs equaled worst-case assumptions. Worst-case cost

assumptions are used although, as explained below, a number of refinements are made in the worst-case assumptions for particular chemicals in the screening. Subsequently, in Section 9.3, impacts are calculated for the organic chemical industry in aggregate using the most-likely assumptions for pollution control costs.

9.2.2.1 Direct Costs. Each chemical received one of four direct cost codes. Appendix I lists the chemicals and corresponding codes.

Code 0 is applied to 39 chemicals that will incur no control costs. These are some of the basic chemicals, chemicals produced mostly in refineries, and surfactants. In some cases the assumption is that adequate control equipment would be included in a new plant for safety, operational, or other reasons independent of an NSPS; this generally is the case in refineries. For other chemicals, particularly surfactants, the assumption is that new plants will use processes that do not require distillation.

Code 1 is applied to chemicals where sulfur or a halogen is involved in the production process. A combined incinerator and scrubber complex are assumed. The complex is designed to meet the specifications of Table 8-1 and is costed following procedures referenced in Chapter 8 and data from Table 8-5. The annualized cost, using a 10 percent real interest rate and 10-year amortization period, is $1,160,900 per plant. This figure is derived by assuming 13 columns to be controlled, a vent stream with a flow rate of 52 $m^3$/min. and no VOC or energy content, no credit for heat recovery other than that associated with a recupertative heat exchanger, and no sharing of control costs with coproducts or by-products that may be produced at the same site. In figuring control costs, projected 1987 gas prices (in 1978 dollars) are used to estimate incineration operating costs; gas price projections are explained in Section 9.2.3.

These assumptions represent the worst case one might encounter. The average plant in the NEP has only three or four columns; only one plant has 13. On the average, in the NEP only two columns per plant would require controls. The 52 $m^3$/min. flow rate is unusually high. The vent stream is assumed to be nitrogen; nitrogen contributes no energy to incineration, which means that substantial amounts of natural gas are required to bring the gas up to incineration temperature and no heat recovery credits are available from vent gases. Finally, savings that could arise from use of

only a single incinerator for disposal of waste gas streams from many sources, including from distillation columns for other chemicals, are not counted.

Code 2 is identical to code 1, except that no scrubber is included because corrosive chemicals are not present. The annualized control cost is $356,000 per plant.

Code 3 chemicals are special cases. The screening was run initially with cost codes 0, 1, and 2. Chemicals that did not show significant price impacts were not subject to further study. However, the others were examined to see if some code 1 or 2 assumptions clearly overstate likely plant characteristics. In a few cases it was found that code 0 was more appropriate. In most cases, code 3 was assigned. This means that EPA prepared more reasonable worst-case cost estimates based on a closer look at the number of distillation columns and actual emission rates. Costs for code 3 chemicals typically range from $140,000 to $300,000 per plant. The actual amounts are given in Appendix I.

The extent to which worst-case assumptions tend to overstate control costs can be seen in the following comparisons. Under the flare preference, control costs at plants with affected columns would be $70,800 per plant. The flare preference represents the most-likely case for controls. On the other hand, worst-case assumptions lead to the following control costs at plants with affected columns: $1,160,900 under code 1, $356,000 under code 2, and generally $140,000 to $300,000 under code 3. Overstating costs ensures a conservative basis for cost estimates in the individual chemical screening process. At some plants, it is possible that control costs may approach worst-case levels, although such instances are unlikely.

9.2.2.2 Rolled-Through Costs of Control. Plants can incur costs of control not only from their own direct costs that they incur but also from pass-through of control costs by suppliers of the input chemicals they use. The organic chemical industry consists in large part of a series of processes, each of which modifies prior organic chemicals. Starting with basic chemicals, such as ethene or benzene (which are generally produced by refineries), chemicals are processed into derivatives and, in turn, into other derivatives and, finally, into end products such as paints, tires, and other items. Control costs at each stage affected by the standards may

be passed on (or rolled through), such that costs add up for chemicals produced from other affected chemicals.

The screening takes into account potential rolled-through control costs by charging control costs for input chemicals to derivatives in proportion to the amounts used in the production of the derivatives. For example, if 1 kg of chemical C is produced from 0.5 kg of chemical A and 0.75 kg of chemical B (with 0.25 kg becoming by-products), one half of the control costs (per kg) for chemical A and three fourths of the control costs (per kg) for chemical B are added to the direct control costs of chemical C to determine the total cost impact for chemical C. (Since control costs generally are calculated without allowing credits for the energy value of VOC compounds combusted, it may be noted that no credits are given to chemicals from inputs even though all input costs are rolled through.)

In practice, not all suppliers for a given plant would be affected by the standards and have control costs to pass through. Moreover, the rolled-through effect could be much less if suppliers were unable to increase prices for recovery of control costs at their plants. Nonetheless, this rolled-through cost methodology helps to ensure that the total control costs considered in the screening are worst-case magnitudes.

The second half of Appendix I presents a breakdown of direct costs and total costs (including rolled-through costs) for each of the 219 chemicals. The first half of Appendix I presents data on the sequence of chemical derivatives used in the rolled-through cost calculations.

In some cases, several manufacturing processes are used by producers. The screening program is designed to select the production route for producing each chemical that would lead to the highest potential control costs in the event all inputs were affected by the NSPS. In the program, each chemical and production process is assigned a hierarchy code that instructs the computer to determine control costs for input chemicals first and subsequently for successive generations of derivative chemicals, which have higher codes. The computer calculates the combined direct and rolled-through costs of control for every possible production route, and then indicates the highest combined cost for each of the chemicals. The hierarchy (or priority) codes are indicated for each chemical in Table I-2 of Appendix I. Details on the screening program can be found in Documentation of the SOCMI MAXCOST Model, as cited in Appendix I.

### 9.2.3 Plant Parameters

Control costs are applied to plant parameters for each chemical to relate control costs to chemical prices and determine the percentage price increase that a plant producing a chemical may incur. Control costs are translated from plant totals to cents-per-kg figures under the assumption that they would be spread among production volumes found at average size plants for each chemical.

Plant sizes are based upon each chemical's production and number of plants in 1978, in general, and can be calculated from data presented in Tables 9-6 through 9-19. Several methods were used to determine average plant sizes, given the variations among chemicals in the amount of data that are publicly available. The methods are:

- When both production and the number of plants are known, an average plant production size is calculated by dividing the number of plants into total production of the chemical.
- When only the number of plants is known, a production figure of 45.4 Gg (100 million pounds) per year is assumed. This is the lowest level of production possible for chemicals included under the standards. An average plant production size then is calculated using this assumption.
- When only the number of producers is known, the number of plants is estimated with the assumption that the plant-to-producer ratio is the same as the average for other chemicals in the same chemical group. Production is assumed to be 45.4 Gg (100 million pounds) per year (as in the second case above), and an average plant size for each chemical is calculated.
- When data on production, the number of plants, and the number of producers are not available (particularly in cases with disclosure problems), an average production size of 45.4 Gg per year is assumed.

It is assumed that new plants with columns affected by the standards will be equal in size to existing plants used in the calculations.

Chemicals are valued at projected market prices for 1987, expressed in 1978 dollars. As shown earlier in Figure 9-3, chemical prices have tended to increase in step with increases in the price of crude oil. Oil or gas costs account for major portions of manufacturing costs for organic chemicals because chemicals are derived from these sources, whose prices have escalated rapidly. Chemical prices in 1987 (the fifth year after proposal)

are projected to increase from 1978 levels at the same rate as the cost of their raw materials -- oil or gas.

Oil and natural gas prices are projected to increase in real terms (i.e., 1978-value dollars) by 148 and 234 percent, respectively, from the base year 1978 to 1987. These projections are taken from the U.S. Department of Energy's Annual Report to Congress (1979) and "Technical Staff Analysis in Response to Notice of Proposed Rulemaking on Phase II of Incremental Price" (February 9, 1980). Even though the world energy markets are soft in 1983, it should be noted that energy prices have increased substantially since 1978. Even if future rates of increase were moderate, they would suffice to approximate the 1987 energy price projections.

The 219 chemicals are partitioned into three groups. The first group consists of all the chemicals derived from oil (and natural gas liquids) and encompasses most of the 219 chemicals. Included in this group are ethylene, propylene, benzene, toluene, xylene, butadiene, and related derivatives. The second group consists of chemicals derived only from natural gas, via such chemicals as methane (or synthesis gas), methanol, or urea. Gas-based chemicals are: 43, 44, 51, 70, 71, 74, 75, 108, 122, 132, 133, 193, 195, 200, 201, 206, 207, 208, 211, 212, 216, 220, 221, and 236. (Chemicals derived in part from oil-based chemicals and in part from gas-based chemicals are assigned to the oil-based group to allow for the lower escalation rate for oil.) A small number of chemicals belong to the third group, natural-based chemicals, such as coconut oil, animal fat, or sugar-based chemicals. Natural-based chemicals are: 57, 107, 110, 125, 191, 192, and 210. Chemicals from natural raw materials are assigned no escalation factor (i.e., are projected to increase in price no faster than the general inflation rate in the economy). The origins of any chemical can be traced in the screening data shown in Appendix I.

Chemical prices are obtained from sources including the U.S. International Trade Commission's Synthetic Organic Chemicals: United States Production and Sales, 1978, Chemical Marketing Reporter, and communications with chemical industry officials. In the case of quotations from Chemical Marketing Reporter and industry officials, in particular, prices are expressed generally as list prices. Discounts or surcharges on list prices may exist, but would be difficult to quantify.

In the case of some chemicals, prices are not available. A number of chemicals are not sold widely. When prices are not available, a price threshold is calculated. This threshold represents the lowest price the chemical could have and still pass the 5 percent price increase criterion. If producers do not sell at a price less than variable costs of production, a chemical with raw material costs greater than the price threshold has a price greater than the price threshold and, therefore, has control costs that are less than 5 percent of its price. This situation prevails because the 219 chemicals are high-volume chemicals generally produced for their own sake, not as incidental by-products.

For example, cyclopropane incurred an effective cost increase of 0.7 cents per kg. Therefore, a price threshold of 14.1 cents per kg (or 0.7 cents divided by 5 percent) is identified. Using 1987 market prices (in 1978 dollars), the total cost of purchasing raw materials used in production of cyclopropane is 64.2 cents per kg of cyclopropane. Thus, one may infer that the price of cyclopropane is likely to be higher than 64.2 cents per kg. Cyclopropane would not incur costs greater than 5 percent of its price under this assumption, and would not fail the screen.

Some of the chemicals for which price information was unavailable were screened out on this basis. This method is conservative in two ways. First, because only raw material costs are considered, these "costs" significantly understate the actual cost per unit of product, which would include direct labor and capital costs as well as a share of the producer's fixed costs. Second, in general, only raw materials with anticipated control costs are considered. Thus, the price of chemicals utilizing raw materials not controlled by the NSPS has been underestimated by this procedure. This method allowed for the analysis of 33 chemicals (identified in Appendix I).

9.2.4 Results of the Screening

None of the 219 chemicals directly affected by the NSPS for distillation fails the screening. Most chemicals would have price increases of less than 1 percent. Table 9-24 summarizes price impacts under the worst-case cost assumptions.

Close to two-fifths (38 percent) of the chemicals would have price increases ranging between 0.0 and 1.0 percent. A further 19 percent of the chemicals would have no price increase, because they are assumed to incur

TABLE 9-24. DISTRIBUTION OF CHEMICALS ACCORDING TO SIZE OF POTENTIAL PRICE INCREASE
Screening Results[a]

| Percentage increase in price of chemical | Number of chemicals | Percentage of all chemicals with price increase estimates |
|---|---|---|
| 0.00 | 35 | 18.8 |
| 0.01 to 0.99 | 70 | 37.6 |
| 1.00 to 1.99 | 55 | 29.6 |
| 2.00 to 2.99 | 16 | 8.6 |
| 3.00 to 3.99 | 8 | 4.3 |
| 4.00 to 4.99 | 2 | 1.1 |
| 5.00 or greater | 0 | 0 |
| All chemicals with price increase estimates | 186 | 100.0 |
| Chemicals studied for threshold only[b] | 33 | -- |
| All chemicals | 219 | -- |

[a]Potential price increases are based on the assumptions used in the screening analysis. The analysis assumes full pass-through of worst-case direct and rolled-through input control costs. Prices are projections for 1987 in 1978 dollars. Average size plants and processes with the highest control costs are used.

[b]A number of chemicals are determined to have control costs equal to less than 5 percent of their prices because known purchase costs (prices) for input chemicals imply that prices charged by producers must be more than 20 times control costs. However, specific price increases are not known, so no percentage price increase is listed.

no control costs due to NSPS (most are basic chemicals produced at refineries). An additional 30 percent would have price increases ranging from 1.00 to 1.99 percent. Again, no chemical would have a price increase of 5 percent or more in relation to its projected 1987 prices, even with the worst-case assumptions on direct and rolled-through control costs.

In sum, approximately 86 percent of the chemicals would have potential maximum price increases below 2 percent if affected by NSPS for distillation. Approximately 95 percent would have potential price increases below 3 percent. While the 33 chemicals studied under the threshold price approach might modify these percentages slightly, if precise price increases were known, the general pattern is that NSPS for distillation would not be a source of significant control costs for any chemicals. (Most-likely control costs, under the flare preference, would show even smaller potential price increases, given the much lower cost of flaring compared to the costs of incineration, in most instances.)

The screening is based upon several cost codes and different degrees of refinement and study of control costs for various chemicals, as discussed earlier in this section. It cannot be inferred that chemicals would incur control costs of each magnitude indicated, since these are worst-case control costs and each chemical's control experiences may vary from the worst-case assumptions in different degrees. Hence, the distribution shown in Table 9-24 illustrates the fact that most chemicals would incur maximum control costs well below the 5 percent level. A small price increase with worst-case control cost estimates indicates that there will be no significant impacts on producer profits, capital availablility, or other finances.

Note, it would be misleading to name and rank each chemical, because the chemicals have been treated differently in terms of the quality and refinement of data collected and in the control cost assumptions. A chemical showing a 3 percent price increase, for example, may simply have received less detailed study and research than one showing a 1.5 percent price increase in the screening.

An implication of the screening results is that no chemical plant or producer is likely to incur significant control costs under the standards, even if control techniques entailed incineration at plants with adverse conditions involving numbers of distillation columns, emissions flow rates,

or energy credits from the emissions stream. Accordingly, no individual chemicals are designated for more in-depth study in the economic analysis.

## 9.3 GENERAL ECONOMIC IMPACTS

This section examines issues such as potential impacts for chemical prices, production, employment, and trade. Whereas the preceding chemical screening analysis is based on worst-case control cost estimates, this section uses estimates of control costs that reflect conditions that are most likely to prevail at affected plants in the industry. Most-likely control costs are based on flare preference and the 98 percent VOC emissions reduction alternative.

Most-likely control conditions will require a capital investment of $110,000 and will result in annualized control costs of $70,800 per plant.[129] For the chemical industry as a whole, investment requirements are estimated to amount to $14.9 million during the first five years after proposal of the distillation NSPS. Similarly, annualized control costs will amount to $9.6 million in the fifth year after proposal. Industry cost totals are based upon the number of plants projected to be affected by distillation NSPS in the first five year period after proposal, net of plants that might control emissions in the baseline or which might exceed the TRE criterion.

The analysis of general economic impacts makes an additional assumption that producers incurring control costs will pass their costs through fully to consumers in the form of higher prices. In the event producers absorbed all or some of their control costs, rather than passing them through, impacts on prices, production, employment, and trade would be less since there would be a smaller potential change in industry prices and demand. As with the worst-case control costs used in the screening analysis, control costs used in this section also reflect 1978 value dollars.

### 9.3.1 Price Impacts

Price impacts with the most-likely estimates of control costs would be small. In 1977, sales by chemical producers in SICs 2865 and 2869 amounted to $30.1 billion (in 1978 dollars), as shown in the 1977 Census of Manufactures.[130] Aggregate control costs of $9.6 million in the fifth year of the NSPS would amount to less than one percent (0.03 percent) of the aggregate sales of the organic chemical industry. In terms of the overall cost of chemicals for consumers, therefore, the distillation NSPS poses little potential for change from what consumers would otherwise pay.

Price changes would be larger when measured against the sales of only those plants affected by the NSPS, but such changes would also be small. As shown in Table 9-25, plant sales by producers in each of the 12 chemical groups incurring control costs range from an average of $6.1 million among producers of detergents and surfactants to $56.4 million among producers of fuel additives. The median sales level of plants is $25.4 million, represented by the average for general non-aromatics plants. Annualized control costs of $70,800 with most-likely controls amount to only 0.1 to 0.8 percent of plant sales, using the group average plants. Such costs would represent an increase in prices of only 0.3 percent for the median plant having $25.4 million in annual sales. Again, if pass-through were less than 100 percent, cost increases would amount to an even lower percentage of sales.

Using group average plant throughput figures, the $70,800 in control costs would amount to 0.1 to 0.8 cents per kg of chemical production. At the median size plant for the chemical industry, which has an annual throughput of 54 Gg, the cost increase would amount to only 0.1 cents per kg. Again, the costs of distillation NSPS do not pose the potential for a large increase in chemical prices.

### 9.3.2 Production Impacts

Because prices will not be affected by any large increases in the cost of production due to distillation NSPS, demand for chemicals will remain

TABLE 9-25. AVERAGE THROUGHPUT AND ANNUAL PLANT SALES
12 Chemical Groups
United States
1978

| Chemical group[a] | Average annual plant throughput[b] (Gg) | Average annual plant sales[b] ($10^6$ 1978 $) |
|---|---|---|
| Intermediates for: | | |
| General aromatics | 63 | 20.1 |
| General non-aromatics | 54 | 25.4 |
| Synthetic elastomers | 74 | 39.2 |
| Plastics and fibers | 80 | 29.1 |
| Plasticizers | 54 | 35.0 |
| Pesticides | 31 | 18.6 |
| Solvents | 70 | 21.0 |
| Detergents and surfactants | 9 | 6.1 |
| Fuel additives | 46 | 56.4 |
| Aerosol propellants and refrigerants | 21 | 20.4 |
| Coatings | 49 | 24.0 |
| Miscellaneous end-use chemicals | 106 | 23.2 |

[a]Twelve of the original 14 chemical groups are listed. The basic chemicals group has no control costs associated with it while the dyes group has no future facilities projected for the five years after date of proposal.

[b]Figures are derived from Tables 9-6 through 9-19.

essentially unchanged. The sensitivity of demand to changes in prices for chemicals is described by economists as the elasticity of demand. It is difficult to quantify the elasticity of demand for organic chemicals, so the issue of potential production impacts can be illustrated by using unit elasticity as an assumption. With unit elasticity (i.e., elasticity equal to minus one), an increase in product prices would result in a proportional decrease in demand for the product. As described in Section 9.3.1, the overall change in prices for the organic chemical industry would be no more than 0.03 percent; hence, with unit elasticity the change in production in the industry would amount to no more than 0.03 percent.

Similarly, if elasticity of demand were greater than one, potential changes in production would still be small. An elasticity of (minus) two would imply potential demand changes of no more than 0.06 percent, still much less than one percent of industry production. Again, as with prices, distillation NSPS offers little prospect of influencing the overall chemical industry.

9.3.3 Employment Impacts

The same calculations apply for industry employment as apply for industry production. As stated in Section 9.1.1.4, employment at plants producing the 219 chemicals amounts to approximately 140,000. If prices were increased to recover the full costs of controls and elasticity of demand equalled (minus) one, the change in production described in Section 9.3.2 would cause a decrease in industry employment of only 40 workers. Like the other changes for the industry as a whole, this is small.

9.3.4 Trade Impacts

Given the small potential change in domestic production ($9.6 million in the example above), U.S. trade in chemicals will remain largely unaffected. As shown earlier in Table 9-4, the U.S. exported $12.2 billion more chemicals in 1980 than it imported. Small changes in domestic production would not alter the overall positive trade balance for chemicals.

### 9.3.5 Other Impacts

Capital requirements for distillation NSPS would also be small. Using the average ratio of long-term capitalization (long-term debt and stockholders' equity) to sales at chemical plants,[131] the chemical industry's median size plant (represented by the average for general non-aromatics producers) has an estimated $1.98 million in long-term debt and $5.11 million in stockholders' equity. This equals a 27.9 percent debt ratio (long-term debt as a percentage of long-term debt plus stockholders' equity) in the baseline. An increase in capital investment of $110,000 to install distillation VOC emissions controls under most-likely control conditions would increase the debt ratio to 29.0 percent if financed entirely from debt sources. This change in the debt ratio is modest, and could be limited to even less if part of the control investments were not funded from debt.

## 9.4 AGGREGATE IMPACTS - SOCIOECONOMIC AND INFLATIONARY

Additional impacts are examined for fifth-year costs and small businesses. These are discussed below.

### 9.4.1 Fifth-Year Impacts

As discussed in Section 9.3, in the fifth year after proposal of distillation NSPS, aggregate control costs for the chemical industry will be approximately $9.6 million. Aggregate capital investment requirements will amount to $14.9 million through the fifth year of the NSPS. The magnitude of these costs in relation to industry sales and financial resources is described in Section 9.3 and shown to be small.

### 9.4.2 Regulatory Flexibility Act Considerations

The Regulatory Flexibility Act (Public Law 96-354, September 19, 1980) requires that special consideration be given to the impacts of proposed regulations on "small" entities. As one criterion for extending loans and related assistance, the Small Business Administration defines a "small" business in the organic chemical industry as one that employs fewer than 500 to 1,000 workers (13 CFR Part 121, Schedule A).[132] Similarly, a small business in the petroleum refining industry is one that employs fewer than 500 to 1,500 workers. These employment numbers are for entire firms, including affiliates, and not just for each individual process unit that

involves distillation.

The actual employment level against which each firm is judged depends on what the primary product of the business is. Other characteristics, such as dominance in a field of operation and refinery feedstock capacity, are also used to classify businesses as large or small. For the purposes of this section, a business is considered small if it: a) is primarily a petroleum refiner and has fewer than 1,500 employees, or b) is primarily a chemical producer and has fewer than 1,000 employees. The Act also applies to small organizations and small governments. However, there is none that would be affected by a distillation NSPS.

Of the 169 producers of the affected chemicals for which employment information is available, 41 are small by the definition given above.[133,134] Thus, approximately 24 percent of the producers of the 219 chemicals are estimated to be small. Because 600 plants would be affected in the first five years, it is possible that all 41 small producers might potentially be affected by NSPS.

However, as revealed in the screening analysis in Section 9.2, control costs would be small given the fact that no chemical would have cost increases equal to 5 percent or more of chemical prices in 1987. As indicated in Section 9.2.4, even with worst-case cost assumptions, 86 percent of the chemicals would have price increases below 2 percent and 95 percent would have price increases below 3 percent. Accordingly, no plants would have significant economic impacts under NSPS.

Since the standards would apply primarily to new sources, it is difficult to estimate their specific effects on projects that will be undertaken by small businesses entering the industry. In general, if a company has the capital to enter the industry, NSPS will require only a small percentage increase in the capital required for the project.

### 9.4.3 Cumulative Price Impacts from Distillation NSPS and Other Air Standards

This section describes potential organic chemical product price increases due to production cost increases attributable to the fifth-year cost of eight air pollution control regulations developed since August 1977 by EPA under Sections 111 and 112 of the Clean Air Act. Section 8.3.1

gives a full account of the cost accumulation methodology and Table 8-11 provides the total direct and rolled-through costs of these potential air regulations for 12 chemical groups.

The costs that are accumulated are based upon a mix of reasonable and worst-case assumptions so that price increase impacts also are not worst case. However, for the cumulative price impacts, it is assumed that producers pass through all effective cost increases to the users of their products.

The price increase analysis is conducted on a chemical group basis because new plant projections are done only for chemical groups (see Table 9-23). Total annualized costs of control for each of the potential air regulations are based partly on these new plant projections. Table 9-23 shows the projected numbers of affected plants through 1987 for distillation NSPS. Table 9-25 presents the average annual plant throughput and average annual plant sales for each chemical group. Dividing sales by throughput, an average product price per kg for the chemical group is calculated. This price is shown in Column A of Table 9-26.

Table 9-26 presents estimates of potential price increases in three stages of analysis: direct costs of seven air standards; direct costs of seven air standards plus NSPS for distillation; and direct plus rolled-through costs of all eight standards.

For each group, direct control costs first are aggregated for seven air regulations initiated previous to the NSPS for distillation, then are divided by the number of affected plants (for distillation NSPS through 1987) and average plant sizes to determine the direct control costs per kilogram produced. The extent to which the price would increase at affected plants if all control costs were passed through to consumers then is calculated. Price increases would range from less than 0.05 percent of the base price for plants in several chemical groups to 0.5 percent for plants in the plastics and fibers group.

The second stage adds the direct control costs due to NSPS for distillation to the direct costs of the other seven air regulations. The addition of the distillation control costs would cause little increase in the product price over that when costs of control for the other seven air

TABLE 9-26. PRICE INCREASES DUE TO DIRECT AND ROLLED-THROUGH INPUT COSTS OF CONTROL IN THE SYNTHETIC ORGANIC CHEMICAL INDUSTRY FOR EIGHT AIR EMISSION STANDARDS
12 Chemical Groups
United States
1978

| Chemical group[a] | (A) Average base price (¢/kg) | (B) Accumulated costs of other regulations[b] (¢/kg produced) | (C) Percentage price increase[c] | (D) Accumulated costs including distillation NSPS[d] (¢/kg produced) | (E) Percentage price increase[e] | (F) Accumulated costs including rolled through costs[f] (¢/kg produced) | (G) Percentage price increase[g] |
|---|---|---|---|---|---|---|---|
| Intermediates for: | | | | | | | |
| General aromatics | 32 | 0.09 | 0.3 | 0.11 | 0.3 | 0.16 | 0.5 |
| General non-aromatics | 47 | 0.04 | 0.1 | 0.08 | 0.2 | 0.16 | 0.3 |
| Synthetic elastomers | 53 | 0.05 | 0.1 | 0.09 | 0.2 | 0.45 | 0.8 |
| Plastics & fibers | 36 | 0.18 | 0.5 | 0.21 | 0.6 | 0.37 | 1.0 |
| Plasticizers | 65 | 0.24 | 0.4 | 0.27 | 0.4 | 0.65 | 1.0 |
| Pesticides | 60 | 0.14 | 0.2 | 0.27 | 0.5 | 0.43 | 0.7 |
| Solvents | 30 | 0.01 | 0.0 | 0.06 | 0.2 | 0.14 | 0.5 |
| Detergents and surfactants | 68 | 0.19 | 0.3 | 0.47 | 0.7 | 0.51 | 0.8 |
| Fuel additives | 123 | 0.03 | 0.0 | 0.09 | 0.1 | 0.14 | 0.1 |
| Aerosol propellants & refrigerants | 97 | 0.07 | 0.1 | 0.19 | 0.2 | 0.33 | 0.3 |
| Coatings | 49 | 0.03 | 0.1 | 0.06 | 0.1 | 0.26 | 0.5 |
| Miscellaneous end-use chemicals | 22 | 0.01 | 0.0 | 0.04 | 0.2 | 0.04 | 0.2 |

[a]Twelve of the original 14 chemical groups are listed. The basic chemicals group has no control costs associated with it while the dyes group has no future facilities projected for the five years after date of proposal.

[b]Costs of control are aggregated for the following potential standards: 1) NESHAP-Benzene Emissions from Benzene Storage Tanks, 2) NESHAP-Benzene Fugitive Emissions, 3) NESHAP-Benzene Emissions from the Ethylbenzene/Styrene Industry, 4) NESHAP Benzene Emissions from the Maleic Anhydride Industry, 5) NSPS-VOC Fugitive Emissions in Synthetic Organic Chemicals Manufacturing, 6) NSPS-VOC Emissions from Volatile Organic Liquid Storage Tanks, 7) NSPS-VOC Emissions from Air Oxidation Process Vents in the Synthetic Organic Chemical Manufacturing Industry.

[c]Percentage price increases when the cost in Column B is added to the base price in Column A. A zero increase means that there is an increase but it is less than 0.05 percent.

[d]Costs of the NSPS on VOC emissiosn from distillation process vents are added to the accumulated costs found in Column B.

[e]Percentage price increases when the cost in Column D is added to the base price in Column A. A zero increase means that there is an increase but it is less than 0.05 percent.

[f]The accumulated costs listed here for all eight potential air regulations include rolled-through costs (see rolling cost methodology section) as well as the direct costs provided in Column D. Rolled-through costs are attributed to all eight standards by scaling up the total direct costs of all the standards by the ratio of rolled-through costs to direct costs for the distillation NSPS.

[g]Percentage price increases when the cost in Column F is added to the base price in Column A.

regulations are totally passed through. The largest change would occur in the detergents and surfactants group, where the price increase would be 0.7 percent.

The final stage is the addition of rolled-through control costs to the direct costs of all eight air regulations. Total direct and rolled-through costs are taken from Table 8-11. Costs for inputs are rolled through for all eight air standards by using the ratio of rolled-through to direct costs from the NSPS for distillation and applying this ratio to the total direct costs for all eight standards. This ratio is different for each group of chemicals. The plasticizers and plastics and fibers groups would show the largest potential price increases, equal to 1.0 percent when cumulated costs were totally rolled through.

In sum, as measured here with group average plants, distillation NSPS will not lead to large increases in chemical prices even when VOC control costs for distillation NSPS are added to the costs of control incurred under other air standards.

## 9.5 REFERENCES FOR CHAPTER 9


1. Jonnard, A. Cited in a memo from Farmer, J.R., EPA, to R.E. Rosensteel, EPA. June 8, 1981. Information from the U.S. International Trade Commission.

2. U.S. International Trade Commission. Synthetic Organic Chemicals. United States Production and Sales, 1978. USITC Publication 1001. p. 1.

3. Ibid. p. 1.

4. Ibid. p. 1.

5. C.H. Kline & Company. The Kline Guide to the Chemical Industry. 1980. Fairfield, New Jersey. p. 96-98.

6. Ibid. p. 9.

7. Ibid. p. 14.

8. Facts and Figures for the U.S. Chemical Industry. Chemical and Engineering News. June 8, 1981. p. 44. Vol. 59. No. 23.

9. Jonnard, A. Cited in a memo from Farmer, J.R., EPA, to R.E. Rosensteel, EPA. June 8, 1981. Information from the U.S. International Trade Commission.

10. U.S. Department of Commerce. 1981 U.S. Industrial Outlook. January 1979. p. 103.

11. U.S. Department of Commerce. Bureau of the Census. 1977 Census of Manufactures: Industry Series - Industrial Organic Chemicals. July 1980. p. 28F-11.

12. Facts and Figures for the U.S. Chemical Industry. Chemical and Engineering News. June 9, 1980. p. 43. Vol. 58. No. 23.

13. Chemical Profitability Sagged in 1980. Chemical and Engineering News. June 1, 1981. p. 8. Vol. 59. No. 22.

14. Facts and Figures for the U.S. Chemical Industry. Chemical and Engineering News. June 9, 1980. p. 43. Vol. 58. No. 23.

15. Chemical Profitability Sagged in 1980. Chemical and Engineering News. June 1, 1981. p. 10. Vol. 59. No. 22.

16. Facts and Figures for the U.S. Chemical Industry. Chemical and Engineering News. June 14, 1982. p. 62. Vo. 60. No. 24.

17. Facts and Figures for the U.S. Chemical Industry. Chemical and Engineering News. June 9, 1980. p. 67. Vol. 58. No. 23.

18. Chemical Profitability Sagged in 1980. Chemical and Engineering News. June 1, 1981. p. 8. Vol. 59. No. 22.

19. Facts and Figures for the U.S. Chemical Industry. Chemical and Engineering News. June 14, 1982. p. 43. Data are based on company annual reports for 15 major chemical companies: Allied Chemical, American Cyanamid, Celanese, Diamond Shamrock, Dow Chemical, DuPont, Ethyl, Hercules, Monsanto, Olin, Pennwalt, Rohm & Haas, Stauffer Chemical, Union Carbide, and Williams. Vol. 60. No. 24.

20. Facts and Figures for the U.S. Chemical Industry. Chemical and Engineering News. June 14, 1982. p. 43. Based on Federal Trade Commission data. Vol. 60. No. 24.

21. Facts and Figures for the U.S. Chemical Industry. Chemical and Engineering News. June 14, 1982. p. 43. Vol. 60. No. 24.

22. Chemical Capacity Sinks to 60 Percent. Chemical and Engineering News. May 24, 1982. p. 17. Vol. 60. No. 21.

23. Facts and Figures for the U.S. Chemical Industry. Chemical and Engineering News. June 14, 1982. Vol. 60. No. 24.

24. Chemical Capacity Use Remains Depressed. Chemical and Engineering News. October 11, 1982. p. 14. Vol. 60. No. 41.

25. Viola, J. EEA Inc. Memo to the Distillation NSPS Docket. April 27, 1983. Historical chemical and energy price data.

26. Facts and Figures for the U.S. Chemical Industry. Chemical and Engineering News. June 12, 1978. p. 66. Vol. 56. No. 24.

27. Facts and Figures for the U.S. Chemical Industry. Chemical and Engineering News. June 14, 1982. p. 67-68. Vol. 60. No. 24.

28. U.S. Department of Commerce. U.S. Exports Schedule E. Commodity by Country. FT/410 December 1978.

29. U.S. Department of Commerce. U.S. General Imports. Schedule A. Commodity by Country. FT/135 December 1978. U.S. Imports for Consumption and General Imports: TSUSA Commodity by Country of Origin. FT 246. Annual 1980.

30. Outlook Dims for Decontrol of Natural Gas. Chemical and Engineering News. February 22, 1982. p. 11-16. Vol. 60. No. 8.

31. Ibid. p. 11.

32. Ibid. p. 16.

33. Ibid. p. 11-16.

34. Chemical Companies Seek Relief from the Burden of Feedstock Costs. Chemical and Engineering News. December 20, 1982. p. 61. Vol. 60. No. 51.

35. World Chemical Outlook. Chemical and Engineering News. December 22, 1980. p. 33. Vol. 58. No. 51.

36. Kridl, A.G. and R.G. Muller. Relative Industrial Economics, U.S.A. vs. EEC During the 1980s. Chemical Industries Division Newsletter. SRI International. September-October 1981. p. 1.

37. Trade Fact Poll: The "Ayes" Have It. Chemical Week. June 13, 1979. p. 16-17. Also Cappuccilli, E., U.S. International Trade Commission. Personal communication with J. Viola, EEA, Inc. January 20, 1983. Tariffs for organic chemicals.

38. Trade Fact Poll: The "Ayes" Have It. Chemical Week. June 13, 1979. p. 16-17. Also Cappuccilli, E., U.S. International Trade Commission. Personal communication with J. Viola, EEA, Inc. January 20, 1983. Tariffs for organic chemicals.

39. Cappuccilli, E. U.S. International Trade Commission. Personal communication with J. Viola, EEA, Inc. January 20, 1983. Tariffs for organic chemicals.

40. Viola, J. EEA Inc. Memo to the Distillation NSPS Docket. March 21, 1983. Sources and values of data used in the economic screening for organic chemicals in the BID for Distillation NSPS.

41. Viola, J. EEA Inc. Memo to the Distillation NSPS Docket. April 27, 1983. Supplemental data for the screening analysis. Part 1.

42. Viola, J. EEA Inc. Memo to the Distillation NSPS Docket. April 27, 1983. Supplemental data for the screening analysis. Part 2.

43. C.H. Kline & Company. The Kline Guide to the Chemical Industry. 1980. Fairfield, New Jersey. p. 98.

44. U.S. International Trade Commission. Synthetic Organic Chemicals. United States Production and Sales, 1978. USITC Publication 10001. p. 14.

45. Gasoline to Trigger Aromatics Shortage. Chemical and Engineering News. May 18, 1981. p. 16. Vol. 59. No. 20.

46. C.H. Kline & Company. The Kline Guide to the Chemical Industry. 1980. Fairfield, New Jersey. p. 98.

47. Slow Recovery Begins for Petrochemicals. Chemical and Engineering News. November 17, 1980. p. 15. Vol. 58. No. 46.

48. Ibid. p. 16.

49. How will They Feed Ethylene Plants of the 1990's. Chemical Business. October 20, 1980. p. 20. Part Two of Chemical Marketing Reporter. Vol. 218. No. 16.

50. Ethylene Feedstocks: An End to Light Ends. Chemical Business. June 29, 1981. p. 19-26. Part Two of Chemical Marketing Reporter. Vol. 219. No. 26.

51. Viola, J. EEA Inc. Memo to the Distillation NSPS Docket. March 21, 1983. Sources and values of data used in the economic screening for organic chemicals in the BID for Distillation NSPS.

52. Viola, J. EEA Inc. Memo to the Distillation NSPS Docket. April 27, 1983. Supplemental data for the screening analysis. Part 1.

53. Viola, J. EEA Inc. Memo to the Distillation NSPS Docket. April 27, 1983. Supplemental data for the screening analysis. Part 2.

54. Viola, J. EEA Inc. Memo to the Distillation NSPS Docket. March 21, 1983. Sources and values of data used in the economic screening for organic chemicals in the BID for Distillation NSPS.

55. Viola, J. EEA Inc. Memo to the Distillation NSPS Docket. April 27, 1983. Supplemental data for the screening analysis. Part 1.

56. Viola, J. EEA Inc. Memo to the Distillation NSPS Docket. April 27, 1983. Supplemental data for the screening analysis. Part 2.

57. C.H. Kline & Company. The Kline Guide to the Chemical Industry. 1980. Fairfield, New Jersey. Table 3-17.

58. Chemical Profile. SB Rubber Chemical Marketing Reporter. January 14, 1980. p. 9.

59. Viola, J. EEA Inc. Memo to the Distillation NSPS Docket. March 21, 1983. Sources and values of data used in the economic screening for organic chemicals in the BID for Distillation NSPS.

60. Viola, J. EEA Inc. Memo to the Distillation NSPS Docket. April 27, 1983. Supplemental data for the screening analysis. Part 1.

61. Viola, J. EEA Inc. Memo to the Distillation NSPS Docket. April 27, 1983. Supplemental data for the screening analysis. Part 2.

62. C.H. Kline & Company. The Kline Guide to the Chemical Industry. 1980. Fairfield, New Jersey. p. 168.

63. Ibid. p. 168.

64. Ibid. p. 174.

65. Ibid. p. 319.

66. Chemical Profile. PVC. Chemical Marketing Reporter. March 10, 1980. p. 9, 18.

67. C.H. Kline & Company. The Kline Guide to the Chemical Industry. 1980. Fairfield, New Jersey. p. 153.

68. Viola, J. EEA Inc. Memo to the Distillation NSPS Docket. March 21, 1983. Sources and values of data used in the economic screening for organic chemicals in the BID for Distillation NSPS.

69. Viola, J. EEA Inc. Memo to the Distillation NSPS Docket. April 27, 1983. Supplemental data for the screening analysis. Part 1.

70. Viola, J. EEA Inc. Memo to the Distillation NSPS Docket. April 27, 1983. Supplemental data for the screening analysis. Part 2.

71. Viola, J. EEA Inc. Memo to the Distillation NSPS Docket. March 21, 1983. Sources and values of data used in the economic screening for organic chemicals in the BID for Distillation NSPS.

72. Viola, J. EEA Inc. Memo to the Distillation NSPS Docket. April 27, 1983. Supplemental data for the screening analysis. Part 1.

73. Viola, J. EEA Inc. Memo to the Distillation NSPS Docket. April 27, 1983. Supplemental data for the screening analysis. Part 2.

74. Pesticides Due for Slow Growth. Chemical and Engineering News. February 27, 1978. p. 7. Vol. 56. No. 9.

75. Ibid. p. 7.

76. U.S. International Trade Commission. Synthetic Organic Chemicals. United States Production and Sales, 1978. USITC Publication 1001.

77. Viola, J. EEA Inc. Memo to the Distillation NSPS Docket. March 21, 1983. Sources and values of data used in the economic screening for organic chemicals in the BID for Distillation NSPS.

78. Viola, J. EEA Inc. Memo to the Distillation NSPS Docket. April 27, 1983. Supplemental data for the screening analysis. Part 1.

79. Viola, J. EEA Inc. Memo to the Distillation NSPS Docket. April 27, 1983. Supplemental data for the screening analysis. Part 2.

80. C.H. Kline & Company. The Kline Guide to the Chemical Industry. 1980. Fairfield, New Jersey. p. 285.

81. Hurley, E. EEA Inc. Memo to T. Desai, EEA Inc. January 22, 1982. Methodology and results for projecting new and replacement facilities in the SOCMI.

82. Viola, J. EEA Inc. Memo to the Distillation NSPS Docket. March 21, 1983. Sources and values of data used in the economic screening for organic chemicals in the BID for Distillation NSPS.

83. Viola, J. EEA Inc. Memo to the Distillation NSPS Docket. April 27, 1983. Supplemental data for the screening analysis. Part 1.

84. Viola, J. EEA Inc. Memo to the Distillation NSPS Docket. April 27, 1983. Supplemental data for the screening analysis. Part 2.

85. Viola, J. EEA Inc. Memo to the Distillation NSPS Docket. March 21, 1983. Sources and values of data used in the economic screening for organic chemicals in the BID for Distillation NSPS.

86. Viola, J. EEA Inc. Memo to the Distillation NSPS Docket. April 27, 1983. Supplemental data for the screening analysis. Part 1.

87. Viola, J. EEA Inc. Memo to the Distillation NSPS Docket. April 27, 1983. Supplemental data for the screening analysis. Part 2.

88. Surfactants Face Slow-Growing Market. Chemical and Engineering News. May 22, 1978. p. 12. Vol. 56. No. 21.

89. C.H. Kline & Company. The Kline Guide to the Chemical Industry. 1980. Fairfield, New Jersey. p. 298.

90. Ibid. p. 305.

91. Viola, J. EEA Inc. Memo to the Distillation NSPS Docket. March 21, 1983. Sources and values of data used in the economic screening for organic chemicals in the BID for Distillation NSPS.

92. Viola, J. EEA Inc. Memo to the Distillation NSPS Docket. April 27, 1983. Supplemental data for the screening analysis. Part 1.

93. Viola, J. EEA Inc. Memo to the Distillation NSPS Docket. April 27, 1983. Supplemental data for the screening analysis. Part 2.

94. Mannsville Chemical Products. Methyl Tertiary-Butyl Ether. Chemical Products Synopsis. 1982. Cortland, New York.

95. Viola, J. EEA Inc. Memo to the Distillation NSPS Docket. March 21, 1983. Sources and values of data used in the economic screening for organic chemicals in the BID for Distillation NSPS.

96. Viola, J. EEA Inc. Memo to the Distillation NSPS Docket. April 27, 1983. Supplemental data for the screening analysis. Part 1.

97. Viola, J. EEA Inc. Memo to the Distillation NSPS Docket. April 27, 1983. Supplemental data for the screening analysis. Part 2.

98. C.H. Kline & Company. The Kline Guide to the Chemical Industry. 1980. Fairfield, New Jersey. p. 270.

99. Production of Aerosols Begins to Rise Again. Chemical and Engineering News. May 21, 1979. p. 5. Vol. 57. No. 21.

100. C.H. Kline & Company. The Kline Guide to the Chemical Industry. 1980. Fairfield, New Jersey. p. 271.

101. Ibid.

102. Viola, J. EEA Inc. Memo to the Distillation NSPS Docket. March 21, 1983. Sources and values of data used in the economic screening for organic chemicals in the BID for Distillation NSPS.

103. Viola, J. EEA Inc. Memo to the Distillation NSPS Docket. April 27, 1983. Supplemental data for the screening analysis. Part 1.

104. Viola, J. EEA Inc. Memo to the Distillation NSPS Docket. April 27, 1983. Supplemental data for the screening analysis. Part 2.

105. Annual Refining Survey. Oil and Gas Journal. March 20, 1978. p. 113. Vol. 76. No. 12.

106. Annual Refining Survey. Oil and Gas Journal. March 26, 1979. p. 127. Vol. 77. No. 13.

107. Annual Refining Survey. Oil and Gas Journal. March 24, 1980. p. 135. Vol. 78. No. 12.

108. Annual Refining Survey. Oil and Gas Journal. March 30, 1982. p. 112. Vol. 79. No. 13.

109. Annual Refining Survey. Oil and Gas Journal. March 22, 1982. p. 130. Vol. 80. No. 12.

110. Erosion of U.S. Refining Capacity Shows Up. Oil and Gas Journal. March 22, 1982. p. 79-81. Vol. 80. No. 12.

111. U.S. Department of Energy. Energy Information Administration. Petroleum Supply Annual 1981. Volume I. July 1982. DOE/EIA-0340 (81)/1.

112. Corporate Scoreboard. Business Week. March 15, 1982. Issue No. 2730.

113. The 500 Largest Industrial Corporations. Fortune. May 4, 1981. Vol. 103. No. 9.

114. Hurley, E. EEA Inc. Memo to T. Desai, EEA Inc. January 22, 1982. Methodology and results for projecting new and replacement facilities in the SOCMI.

115. Schell, A. Chemical Marketing Reporter. Personal communication with J. Viola, Energy and Environmental Analysis, Inc. September 30, 1982.

116. Facts and Figures for the U.S. Chemical Industry. Chemical and Engineering News. June 9, 1980. Vol. 58. No. 23.

117. U.S. Environmental Protection Agency. Office of Air Quality Planning and Standards. Air Oxidation Processes in Synthetic Organic Chemical Manufacturing Industry -- Background Information for Proposed Standards. January 1982. EPA-450/3-82-001a.

118. Chemical Engineering. Semiannual Inventory of New Plants and Facilities. April 15, 1963.

119. Chemical Engineering. Semiannual Inventory of New Plants and Facilities. October 28, 1963.

120. Chemical Engineering. Semiannual Inventory of New Plants and Facilities. April 27, 1964.

121. Chemical Engineering. New Plants and Facilities. October 26, 1964.

122. Chemical Engineering. New Plants and Facilities. April 26, 1965.

123. Chemical Engineering. New Plants and Facilities. October 11, 1965.

124. Chemical Engineering. New Plants and Facilities. April 25, 1966.

125. Chemical Engineering. New Plants and Facilities. October 24, 1966.

126. Chemical Engineering. New Plants and Facilities. April 10, 1967.

127. Chemical Engineering. New Plants and Facilities. October 9, 1967.

128. Facts and Figures for the Chemical Industry. Chemical and Engineering News. June 14, 1982. p. 42. Vol. 60. No. 24.

129. Stelling, J. Radian Corp. Memo to Beck, D., EPA:CPB, and Bell, D., EPA:SDB. August 26, 1982. Distillation operations regulatory analysis using 98 percent flares. 20 p.

130. U.S. Department of Commerce. Bureau of the Census. 1977 Census of Manufactures: Industry Series - Industrial Organic Chemicals. July 1980. p. 28F-11.

131. Robert Morris Associates. Annual Statement Studies. 1980. Philadelphia, Pennsylvania.

132. U.S. Small Business Administration. Small Business Size Standards. Federal Register. July 15, 1980. 45 FR 47415.

133. Dun & Bradstreet. Million Dollar Directory. 1981.

134. Viola, J. EEA Inc. April 27, 1983. Memo to the Distillation NSPS Docket. Business size data.

# APPENDIX A
# EVOLUTION OF THE PROPOSED STANDARD

# APPENDIX A
# EVOLUTION OF THE PROPOSED STANDARD

This study was undertaken to develop new source performance standards (NSPS) for distillation unit operations in the organic chemical manufacturing industry. Work on the study was begun in September 1979 by Energy and Environmental Analysis, Inc., under the direction of the Office of Air Quality Planning and Standards (OAQPS), Emission Standards and Engineering Division (ESED). The decision to develop this standard was made on the recommendation of EPA in conformity with its policy to develop generic standards for the organic chemical manufacturing industry.

The chronology which follows lists the important events which have occurred in the development of background information for the new source performance for distillation unit operations in the organic chemical manufacturing industry.

| | |
|---|---|
| September 12, 1979 | Letter from A. Miles, EEA, to L.Evans, EPA assessing the Hydroscience draft vacuum systems emission projections document and the desirability of developing a generic for control of emissions from vacuum systems. |
| March 25, 1980 | Review report on Hydroscience vacuum systems emission projections document delivered to EPA. |
| April 15, 1980 | Concurrence memorandum on NSPS Development for the vacuum Unit operations in synthetic organic chemical manufacturing industry (SOCMI) finalized. |
| June 3, 1980 | Concurrence memorandum on Change of Scope of NSPS development for vacuum unit Operations finalized. |
| June 1980 | Development of data profile initiated. |
| June 1980 | Workplan approved by EPA. |
| September 1980 | Draft impact criteria and screening workplan for economic analysis delivered to EPA. |
| September 18, 1980 | Meeting with EEA, EPA, and CMA to discuss the approach taken for the development of a standard for distillation operations for SOCMI. |
| September 1980 | Work initiated to designate chemicals as product/byproduct. |
| October 1980 | Plant visit to Air Products and Chemicals Inc., Pensacola, Florida. |
| November 1980 | Plant visit to Allemania Chemicals in Plaquemine, Louisiana. |
| November 1980 | Plant visit to Dow Chemicals in Freeport, Texas. |
| November 1980 | Preliminary costing done for the control of worst case emissions. |
| December 18, 1980 | Meeting held between EEA and EPA to discuss modifying the Radian list of chemicals representing SOCMI. |

| | |
|---|---|
| January 12, 1981 | Meeting held between EEA and EPA to discuss EEA's recommendation for redefining the scope of the distillation NSPS. |
| January 1981 | Results of first economic impact screening analysis presented to EPA. |
| February 8, 1981 | Meeting held between EEA and EPA to discuss production and plant capacity cutoffs. |
| February 10, 1981 | Concurrence memorandum on redefining the scope of NSPS distillation finalized. |
| February 1981 | Work completed on an evaluation of the cost to control worst case emissions in an incinerator. |
| April 7, 1981 | Meeting with EEA, CMA, API, SOCMA, and EPA to discuss the change in scope of the project and the new approach to development of the regulation. |
| April 21, 1981 | Meeting held between EEA and EPA to discuss what baseline emission control should be used in the regulatory analysis. |
| May 28, 1981 | Meeting with EEA and EPA to discuss methods used in the regulatory analysis. |
| June 1, 1981 | Meeting held between EEA and EPA to discuss modifying the scope of the distillation project. |
| June 10, 1981 | Meeting with EEA and EPA to decide on a new production capacity cutoff. |
| June 1981 | Work begun on the preparation of Chapters 3, 4, and 5 of the BID. |
| July 1981 | Memorandum for defining the regulatory alternatives and the rationale for baseline control delivered to EPA. |
| August 6, 1981 | Meeting held between EEA and EPA to discuss the regulatory analysis. |
| September 2, 1981 | Meeting held between EEA and EPA to discuss the regulatory analysis, national emission profile, and economic affordability analysis. |

| | |
|---|---|
| September 24, 1981 | Meeting held between EEA and EPA to discuss the economic affordability analysis. |
| October 30, 1981 | Concurrence memorandum on the Chemicals Subject to the Distillation NSPS finalized. |
| November 17, 1981 | Plant visit to Allied Chemical in Frankford, Pennsylvania. |
| December 3, 1981 | Meeting held between EEA and EPA to discuss combustion control devices and the regulatory analysis methodology. |
| December 1981 | Memorandum comparing costs of various control devices prepared. |
| December 1981 | BID Chapters 3,4,5, and 6 mailed out to industry. |
| January 13, 1982 | Meeting held between EEA and EPA to discuss BID Appendix D and the flow cutoff point. |
| February 11, 1982 | Meeting between EEA and EPA to discuss the definition of an affected facility. |
| February 17, 1982 | Meeting between EEA and EPA to discuss boiler performance tests. |
| February 23, 1982 | Meeting between EEA and EPA to discuss the results of the regulatory analysis. |
| February 1982 | Revised worst case to control model is developed and control costs estimated for 15 chemicals provided by EAB. |
| February 1982 | Concurrence memorandum on the Basis for the Standard to Regulate VOC Emissions from Organic Chemical Plant Distillation Operations finalized. |
| March 1982 | Economic analysis completed. |
| April 1982 | Working Group package submitted to ESED. |

| | |
|---|---|
| June 7, 1982 | NAPCTAC package submitted to ESED. |
| June 7, 1982 | Docket opened in Washington, D.C. |
| July 21-22, 1982 | NAPCTAC meeting. |
| July 29, 1982 | Meeting to discuss issues raised at NAPCTAC meeting. |

# APPENDIX B
# INDEX TO ENVIRONMENTAL CONSIDERATIONS

# APPENDIX B

## INDEX TO ENVIRONMENTAL CONSIDERATIONS

This appendix consists of a reference system which is cross indexed with the October 21, 1974 Federal Register (39 FR37419) containing EPA guidelines for the preparation of Environmental Impact Statements. This index can be used to identify sections of the document which contain data and information germane to any portion of the Federal Register guidelines.

APPENDIX B

INDEX TO ENVIRONMENTAL IMPACT CONSIDERATIONS

| Agency Guidelines for Preparing Regulatory Action Environmental Impact Statements (39 FR 37419) | Location Within the Background Information Document (BID) |
|---|---|
| 1. Background and Description of proposed Action | |
| Summary of Regulatory Alternatives | A range of regulatory alternative control levels is discussed in Section 6.1. |
| Statutory basis for the Standard | The statutory basis for the standard is given in Chapter 1, Section 1.1. |
| Facilities Affected | A description of the facilities to be affected is given in Chapter 6. |
| Process Affected | A description of the processes to be affected is given in Chapter 3, Section 3.3. |
| Availability of Control Technology | Information on the availability of control technology is given in Chapter 4. |
| Existing Regulations at State or Local Level | A dscussion of existing regulations on the industry to be affected by the standards is included in Chapter 3, Section 3.5. |
| 2. Alternatives to the Proposed Action | |
| Description of range of alternatives | The definition of the available control range is presented in Chapter 6, Section 6.1. |

APPENDIX B

INDEX TO ENVIRONMENTAL IMPACT CONSIDERATIONS
(CONTINUED)

| Agency Guidelines for Preparing Regulatory Action Environmental Impact Statements (39 FR 37419) | Location Within the Background Information Document (BID) |
|---|---|
| Environmental Impacts | |
| Air Pollution | The air pollution impact of the control alternatives are considered in Chapter 7, Section 7.1. |
| Water Pollution | The impact of the control alternatives on water pollution are considered in Chapter 7, Section 7.2. |
| Solid Waste Disposal | The impact of the control alternatives on solid waste disposal are considered in Chapter 7, Section 7.3. |
| Energy | The impact of the control alternatives on energy use are considered in Chapter 7, Section 7.4. |
| Other Impacts | Other impacts associated with the control alternatives are evaluated in Chapter 7, Sections 7.5 and 7.6. |
| Costs | The impact of the control alternatives on costs are considered in Chapter 8, Section 8.2. |

# APPENDIX C
# NATIONAL EMISSIONS PROFILE

# APPENDIX C
# NATIONAL EMISSIONS PROFILE

The purpose of this appendix is to present the emissions data base gathered for the distillation NSPS. All emissions data collected are listed with appropriate reference to the source of the data. Those units used in the regulatory analysis are identified.

ABBREVIATION KEY

99999= DEFAULT VALUE= INSUFFICIENT DATA
00000= DEFAULT VALUE= NONCONDENSIBLES EXITING DISTILLATION UNIT ARE RECYCLED OR NO ACTUAL EMISSIONS

CHI= CHEMICAL IDENTIFICATION NUMBER
  CONF= CONFIDENTIAL
  MIX= INDISTINGUISHABLE PRODUCTS
MFR= CHEMICAL MANUFACTURER
  A= CONFIDENTIAL
PLNT LOCN= PLANT LOCATION
  YS= LOCATED IN A STATE WITH SIP
  NS= LOCATED IN A STATE WITHOUT A SIP
NO COL= NUMBER OF DISTILLATION COLUMNS
COL CND= COLUMN CONDITION
  V= VACUUM
  NV= NON-VACUUM
  CO= CONFIDENTIAL
PR EQUP= PRODUCT RECOVERY EQUIPMENT
  CON= CONDENSER
  SCB= SCRUBBER
  ABS= ABSORBER
FINL CNTL= FINAL EMMISION CONTROL EQUIPMENT
  ATM= EMISSIONS VENTED TO ATMOSPHERE
  FLR= FLARE
  INC= INCINERATOR
  BLR= BOILER
  NON= NO EMMISIONS FROM THIS COLUMN
OPR MODE= OPERATING MODE
  CNT= CONTINUOUS
  BTH= BATCH
DIST TYPE= DISTILLATION TYPE
  FRC= FRACTIONATING DISTILLATION
  FLH= FLASH DISTILLATION
FLOW SCFM= FLOW OF PROCESS VENT STREAM
BTU/SCF= HEAT CONTENT
VOC LB/HR= VOC FLOW
%VOC= VOC CONCENTRATION
%C= CARBON CONTENT
%N= NITROGEN CONTENT
%H= HYDROGEN CONTENT
%O= OXYGEN CONTENT
%CL= CHLORIDE CONTENT
ATOM NUMB= HYPOTHETICAL NUMBER OF ATOMS PER AVERAGE MOLECULE

EOF:

| CH # | MFR | PLNT LOCN | NO COL | COL CND | PR EQUP | FINL CNTL | OPR MODE | DIST TYPE | FLOW SCFM | BTU/ SCF | VOC LB/HR | %VOC | %C | %N | %H | %O | %CL | NUMB | NEP | NO |
|---|---|---|---|---|---|---|---|---|---|---|---|---|---|---|---|---|---|---|---|---|
| 1 | CE | CTX | 1 | NV | CON | RCL | CNT | FLH | 000.000 | 0000 | 0000.000 | 000.00 | 000.00 | 000.00 | 000.00 | 000.00 | 000.00 | 00.000 | | 1,2 |
| 1 | CE | CTX | 2 | NV | SCB | FLR | CNT | FRC | 647.300 | 0293 | 0183.000 | 003.40 | 019.20 | 024.90 | 036.80 | 018.20 | 000.90 | 3.261 | X | |
| 1 | CE | CTX | 1 | NV | CON | NON | CNT | FRC | 000.000 | 0000 | 0000.000 | 000.00 | 000.00 | 000.00 | 000.00 | 000.00 | 000.00 | 00.000 | | |
| 1 | TE | LTX | 4 | NV | SCB | ATM | CNT | FRC | 999.999 | 9999 | 9999.999 | 999.99 | 999.99 | 999.99 | 999.99 | 999.99 | 999.99 | 99.999 | | 95,96,97 |
| 2 | CE | CTX | 3 | NV | SCB | ATM | CNT | FRC | 50.000 | 0004 | 0001.100 | 000.30 | 000.30 | 091.80 | 005.30 | 002.50 | 000.00 | 2.063 | X | 1,2 |
| 2 | TE | KTN | 1 | CO | CON | NON | CNT | FRC | 000.000 | 0000 | 0000.000 | 000.00 | 000.00 | 000.00 | 000.00 | 000.00 | 000.00 | 00.000 | X | 3 |
| 2 | TE | KTN | 1 | CO | CON | RCL | CNT | FRC | 000.000 | 0000 | 0000.000 | 000.00 | 000.00 | 000.00 | 000.00 | 000.00 | 000.00 | 00.000 | | |
| 2 | TE | KTN | 1 | CO | CON | NON | CNT | FRC | 000.000 | 0000 | 0000.000 | 000.00 | 000.00 | 000.00 | 000.00 | 000.00 | 000.00 | 00.000 | | |
| 2 | TE | KTN | 1 | CO | CON | NON | CNT | FRC | 000.000 | 0000 | 0000.000 | 000.00 | 000.00 | 000.00 | 000.00 | 000.00 | 000.00 | 00.000 | | |
| 2 | TE | KTN | 1 | CO | CON | ATM | CNT | FRC | 1.940 | 0068 | 0000.800 | 002.30 | 004.80 | 083.50 | 009.70 | 001.90 | 000.00 | 2.341 | | |
| 2 | MNS | TCTX | 4 | NV | CON | FLR | CNT | FRC | 999.999 | 9999 | 9999.999 | 999.99 | 999.99 | 999.99 | 999.99 | 999.99 | 999.99 | 99.999 | | 84,85,98,99 |
| 2 | UCC | BTX | 1 | NV | CON | FLR | CNT | FRC | 358.000 | 0333 | 0375.000 | 011.40 | 030.70 | 000.80 | 028.60 | 029.30 | 000.00 | 4.142 | X | 4,5,6 |
| 2 | UCC | BTX | 1 | NV | CON | FLR | CNT | FRC | 575.000 | 0380 | 0600.000 | 011.60 | 030.90 | 000.80 | 028.60 | 029.30 | 000.00 | 4.120 | | |
| 2 | UCC | BTX | 1 | NV | CON | ATM | CNT | FRC | 1.450 | 0903 | 0001.600 | 010.00 | 021.60 | 003.90 | 069.80 | 004.70 | 000.00 | 5.237 | | |
| 2 | UCC | BTX | 1 | NV | CON | ATM | CNT | FRC | 0.180 | 0207 | 0000.080 | 006.20 | 008.20 | 040.70 | 036.60 | 014.50 | 000.00 | 3.009 | | |
| 2 | UCC | BTN | 7 | NV | CON | NON | CNT | FRC | 000.000 | 0000 | 0000.000 | 000.00 | 000.00 | 000.00 | 000.00 | 000.00 | 000.00 | 00.000 | | |
| 2 | UCC | BTN | 1 | V | CON | NON | CNT | FRC | 000.000 | 0000 | 0000.000 | 000.00 | 000.00 | 000.00 | 000.00 | 000.00 | 000.00 | 00.000 | | |
| 3 | TE | KTN | 1 | CO | CON | ATM | CNT | FRC | 1.200 | 1024 | 0003.810 | 057.50 | 029.20 | 000.00 | 057.50 | 013.30 | 000.00 | 7.403 | X | |
| 3 | TE | KTN | 4 | CO | CON | ATM | CNT | FRC | 8.160 | 1024 | 0025.880 | 056.80 | 029.20 | 000.00 | 057.60 | 013.20 | 000.00 | 7.323 | | 7,8,9 |
| 3 | TE | KTN | 1 | CO | CON | ATM | CNT | FRC | 3.660 | 1024 | 0011.610 | 058.20 | 028.90 | 000.00 | 057.60 | 013.50 | 000.00 | 7.383 | | |
| 3 | TE | KTN | 1 | CO | CON | ATM | CNT | FRC | 4.980 | 1024 | 0015.810 | 056.80 | 029.20 | 000.00 | 057.50 | 013.20 | 000.00 | 7.326 | | |
| 3 | TE | KTN | 1 | CO | CON | ATM | CNT | FRC | 0.480 | 1024 | 0001.530 | 060.30 | 029.50 | 000.00 | 56.30 | 014.30 | 000.00 | 7.724 | | |
| 3 | UCC | BRTX | 1 | NV | CON | RCL | CNT | FLH | 000.000 | 0000 | 0000.000 | 000.00 | 000.00 | 000.00 | 00.00 | 000.00 | 000.00 | 00.000 | | |
| 3 | UCC | BRTX | 3 | NV | CON | NON | CNT | FRC | 000.000 | 0000 | 0000.000 | 000.00 | 000.00 | 000.00 | 00.00 | 000.00 | 000.00 | 00.000 | | |
| 3 | UCC | BRTX | 1 | V | CON | ATM | CNT | FRC | 999.999 | 9999 | 9999.999 | 999.99 | 999.99 | 999.99 | 99.99 | 999.99 | 999.99 | 99.999 | | |
| 4 | S | DPTX | 1 | NV | SCB | FLR | CNT | FRC | 21.130 | 2592 | 0170.200 | 100.00 | 030.50 | 000.00 | 068.70 | 000.80 | 000.00 | 11.381 | X | |
| 4 | S | DPTX | 1 | V | SCB | FLR | CNT | FRC | 12.150 | 0000 | 0000.000 | 000.00 | 000.00 | 079.00 | 000.00 | 021.00 | 000.00 | 2.000 | | 10,11,12 |
| 4 | S | DPTX | 1 | NV | CON | FLR | CNT | FRC | 18.000 | 0000 | 0000.000 | 000.00 | 000.00 | 079.00 | 000.00 | 021.00 | 000.00 | 2.000 | | |
| 4 | S | DPTX | 1 | NV | CON | RCL | CNT | FLH | 000.000 | 0000 | 0000.000 | 000.00 | 000.00 | 000.00 | 000.00 | 000.00 | 000.00 | 00.000 | | |
| 4 | S | DCA | 1 | NV | CON | ATM | CNT | FRC | 1.390 | 0966 | 0006.040 | 043.00 | 024.60 | 000.00 | 065.20 | 010.20 | 000.00 | 7.765 | X | |
| 4 | S | DCA | 1 | V | CON | ATM | CNT | FRC | 1.390 | 0966 | 0006.040 | 043.00 | 024.60 | 000.00 | 065.20 | 010.20 | 000.00 | 7.765 | | 10,11,12 |
| 4 | TE | KTN | 1 | NV | CON | ATM | CNT | FRC | 50.400 | 0070 | 0016.900 | 003.70 | 004.70 | 084.10 | 009.50 | 001.60 | 000.00 | 2.241 | X | |
| 4 | TE | KTN | 2 | NV | CON | NON | CNT | FRC | 000.000 | 0000 | 0000.000 | 000.00 | 000.00 | 000.00 | 000.00 | 000.00 | 000.00 | 00.000 | | 8,9,13 |
| 4 | TE | KTN | 1 | NV | CON | ATM | CNT | FRC | 1.500 | 1225 | 0010.400 | 100.00 | 028.60 | 000.00 | 057.10 | 014.30 | 000.00 | 7.000 | | |
| 4 | ALL | FPA | 4 | NV | CON | ATM | CNT | FRC | 999.999 | 9999 | 0014.700 | 999.99 | 999.99 | 999.99 | 999.99 | 999.99 | 000.00 | 99.999 | | |
| 4 | ALL | FPA | 2 | NV | CON | ATM | CNT | FRC | 999.999 | 9999 | 9999.999 | 999.99 | 999.99 | 999.99 | 999.99 | 999.99 | 999.99 | 99.999 | | 100,101,102 |
| 4 | ALL | FPA | 2 | V | CON | ATM | CNT | FRC | 999.999 | 9999 | 9999.999 | 999.99 | 999.99 | 999.99 | 999.99 | 999.99 | 999.99 | 99.999 | | |
| 4 | FMC | BATX | 1 | NV | CON | NON | CNT | FRC | 000.000 | 0000 | 0000.000 | 000.00 | 000.00 | 000.00 | 000.00 | 000.00 | 000.00 | 00.000 | | |
| 4 | MNS | ATX | 1 | NV | CON | RCL | CNT | FRC | 000.000 | 0000 | 0000.000 | 000.00 | 000.00 | 000.00 | 000.00 | 000.00 | 000.00 | 00.000 | | |
| 4 | MNS | ATX | 1 | V | CON | ATM | CNT | FLR | 999.999 | 9999 | 9999.999 | 999.99 | 999.99 | 999.99 | 999.99 | 999.99 | 999.99 | 99.999 | | |
| 4 | UCC | IWV | 1 | NV | CON | ATM | CNT | FRC | 000.000 | 0000 | 0000.000 | 000.00 | 000.00 | 000.00 | 000.00 | 000.00 | 000.00 | 00.000 | | |
| 4 | UCC | IWV | 2 | NV | CON | ATM | CNT | FRC | 0.100 | 0036 | 0000.200 | 018.80 | 016.10 | 046.40 | 032.10 | 005.30 | 000.00 | 3.500 | | |
| 4 | UCC | IWV | 1 | V | CON | ATM | CNT | FRC | 0.100 | 0360 | 0000.200 | 018.80 | 016.10 | 046.40 | 032.10 | 005.30 | 000.00 | 2.041 | | 14,15,16 |
| 4 | USS | HPA | 5 | NV | CON | ATM | CNT | FRC | 999.999 | 9999 | 9999.999 | 999.99 | 999.99 | 999.99 | 999.99 | 999.99 | 999.99 | 99.999 | | |
| 4 | USS | HPA | 2 | V | CON | ATM | CNT | FRC | 999.999 | 9999 | 9999.999 | 999.99 | 999.99 | 999.99 | 999.99 | 999.99 | 999.99 | 99.999 | | |
| 4 | USS | HPA | 1 | NV | CON | NON | CNT | FRC | 000.000 | 0000 | 0000.000 | 000.00 | 000.00 | 000.00 | 000.00 | 000.00 | 000.00 | 00.000 | | 102,103,104 |
| 4 | CHEV | RCA | 2 | NV | CON | NON | CNT | FRC | 000.000 | 0000 | 0000.000 | 000.00 | 000.00 | 000.00 | 000.00 | 000.00 | 000.00 | 00.000 | | |
| 4 | EXON | BWNJ | 3 | NV | CON | ATM | CNT | FRC | 999.999 | 9999 | 9999.999 | 999.99 | 999.99 | 999.99 | 999.99 | 999.99 | 999.99 | 99.999 | | 105,106 |
| 4 | EXON | BWNJ | 1 | NV | CON | ATM | CNT | FRC | 000.000 | 0000 | 0000.000 | 000.00 | 000.00 | 000.00 | 000.00 | 000.00 | 000.00 | 00.000 | | |
| 5 | DP | MTN | 1 | V | ABS | ATM | CNT | FRC | 999.999 | 9999 | 9999.999 | 999.99 | 999.99 | 999.99 | 999.99 | 999.99 | 999.99 | 99.999 | | 70,41,42 |
| 5 | RH | DPTX | 2 | V | CON | ATM | CNT | FRC | 101.200 | 0004 | 0001.800 | 000.30 | 000.30 | 080.60 | 000.40 | 018.80 | 000.00 | 2.010 | X | 17,18,19 |
| 5 | RH | DPTX | 1 | V | CON | ATM | CNT | FRC | 39.200 | 0004 | 0000.180 | 000.10 | 000.10 | 081.00 | 000.10 | 018.80 | 000.00 | 2.032 | | |
| 5 | RH | DPTX | 1 | NV | CON | ATM | CNT | FRC | 4.400 | 0190 | 0004.000 | 001.00 | 001.40 | 075.20 | 002.90 | 020.50 | 000.00 | 2.080 | | |
| 5 | RH | DPTX | 1 | NV | CON | FLR | CNT | FRC | 31.500 | 1916 | 0289.000 | 100.00 | 030.00 | 000.00 | 060.00 | 010.00 | 000.00 | 10.000 | | |
| 6 | DP | BTX | 1 | NV | CON | INC | CNT | FRC | 999.999 | 9999 | 9999.999 | 999.99 | 999.99 | 999.99 | 999.99 | 999.99 | 999.99 | 99.999 | | 41,42,107 |
| 6 | SOH | VOH | 1 | V | CON | INC | CNT | FRC | 999.999 | 9999 | 9999.999 | 999.99 | 999.99 | 999.99 | 999.99 | 999.99 | 999.99 | 99.999 | | 107 |
| 7 | ALL | FPA | 1 | V | CON | ATM | CNT | FRC | 999.999 | 9999 | 0001.200 | 999.99 | 999.99 | 999.99 | 999.99 | 999.99 | 999.99 | 99.999 | | 101,102 |
| 7 | CHEV | RCA | 1 | V | CON | INC | CNT | FRC | 999.999 | 9999 | 9999.999 | 999.99 | 999.99 | 999.99 | 999.99 | 999.99 | 999.99 | 99.999 | | |
| 8 | UCC | TLA | 1 | NV | SCB | NON | CNT | FRC | 999.999 | 9999 | 9999.999 | 999.99 | 999.99 | 999.99 | 999.99 | 999.99 | 999.99 | 99.999 | | 15,16,108 |
| 8 | UCC | TLA | 3 | NV | CON | FLR | CNT | FRC | 999.999 | 9999 | 9999.999 | 999.99 | 999.99 | 999.99 | 999.99 | 999.99 | 999.99 | 99.999 | | |

| CH # | MFR | PLNT LOCN | NO COL | COL CND | PR EQUP | FINL CNTL | OPR MODE | DIST TYPE | FLOW SCFM | BTU/ SCF | VOC LB/HR | XVOC | XC | XH | XH | XO | XCL | ATOM NUMB | SCR NEP | REF NO |
|---|---|---|---|---|---|---|---|---|---|---|---|---|---|---|---|---|---|---|---|---|
| 8 | UCC | TLA | 1 | V | CON | FLR | CNT | FRC | 999.999 | 9999 | 9999.999 | 999.99 | 999.99 | 999.99 | 999.99 | 999.99 | 999.99 | 99.999 | | |
| 9 | DB | FTX | 1 | V | CON | ATM | CNT | FRC | 7.400 | 0000 | 0000.000 | 000.00 | 000.00 | 079.00 | 000.00 | 021.00 | 000.00 | 2.000 | X | 20,21,22 |
| 9 | DB | FTX | 2 | V | CON | ATM | CNT | FRC | 20.000 | 0000 | 0000.000 | 000.00 | 000.00 | 079.00 | 000.00 | 021.00 | 000.00 | 2.000 | | |
| 9 | UCC | TLA | 1 | NV | CON | FLR | CNT | FRC | 364.000 | 0150 | 0289.000 | 005.00 | 009.50 | 056.60 | 015.10 | 018.80 | 000.00 | 2.653 | X | |
| 9 | UCC | TLA | 2 | V | SCB | ATM | CNT | FRC | 27.600 | 0400 | 0055.800 | 012.80 | 017.70 | 046.20 | 027.90 | 008.20 | 000.00 | 4.697 | | 15,16,23 |
| 9 | UCC | TLA | 1 | V | CON | ATM | CNT | FRC | 22.600 | 0092 | 0010.500 | 002.90 | 006.10 | 080.80 | 009.90 | 003.20 | 000.00 | 2.703 | | |
| 9 | UCC | TLA | 2 | V | CON | ATM | CNT | FRC | 13.200 | 0008 | 0000.600 | 000.20 | 000.60 | 094.00 | 001.40 | 003.80 | 000.00 | 2.035 | | |
| 10 | DB | FTX | 5 | V | CON | ATM | CNT | FRC | 999.999 | 9999 | 9999.999 | 999.99 | 999.99 | 999.99 | 999.99 | 999.99 | 999.99 | 99.999 | | 20,21,22 |
| 10 | UCC | TLA | 1 | NV | CON | RCL | CNT | FRC | 000.000 | 0000 | 0000.000 | 000.00 | 000.00 | 000.00 | 000.00 | 000.00 | 000.00 | 00.000 | X | 15,16,23 |
| 10 | UCC | TLA | 3 | V | CON | ATM | CNT | FRC | 33.900 | 0168 | 0015.700 | 005.80 | 009.00 | 063.80 | 016.30 | 008.70 | 000.00 | 2.405 | | |
| 11 | AC | FOLA | 1 | NV | CON | FLR | CNT | FRC | 10.200 | 0379 | 0015.800 | 017.10 | 033.80 | 010.50 | 015.10 | 040.50 | 000.00 | 3.187 | X | 24,25,26 |
| 11 | AC | FOLA | 1 | V | CON | FLR | CNT | FRC | 22.700 | 0439 | 0044.000 | 022.50 | 005.70 | 051.70 | 070.10 | 012.50 | 000.00 | 3.236 | | |
| 11 | AC | FOLA | 1 | V | CON | FLR | CNT | FRC | 25.600 | 0346 | 0037.900 | 017.50 | 018.40 | 052.50 | 018.40 | 010.80 | 000.00 | 2.774 | | |
| 11 | AC | FOLA | 2 | NV | CON | NON | CNT | FRC | 000.000 | 0000 | 0000.000 | 000.00 | 000.00 | 000.00 | 000.00 | 000.00 | 000.00 | 00.000 | | |
| 11 | DP | BTX | 1 | NV | CON | NON | CNT | FRC | 000.000 | 0000 | 0000.000 | 000.00 | 000.00 | 000.00 | 000.00 | 000.00 | 000.00 | 00.000 | | 24,109,41,42 |
| 11 | DP | BTX | 2 | NV | CON | FLR | CNT | FRC | 999.999 | 9999 | 9999.999 | 999.99 | 999.99 | 999.99 | 999.99 | 999.99 | 999.99 | 99.999 | | |
| 11 | DP | BTX | 1 | NV | CON | FLR | CNT | FRC | 999.999 | 9999 | 9999.999 | 999.99 | 999.99 | 999.99 | 999.99 | 999.99 | 999.99 | 99.999 | | |
| 11 | DP | BTX | 2 | V | CON | FLR | CNT | FRC | 999.999 | 9999 | 9999.999 | 999.99 | 999.99 | 999.99 | 999.99 | 999.99 | 999.99 | 99.999 | | |
| 11 | SO | LOH | 1 | NV | CON | NON | CNT | FRC | 000.000 | 0000 | 0000.000 | 000.00 | 000.00 | 000.00 | 000.00 | 000.00 | 000.00 | 00.000 | | 24,110 |
| 11 | SO | LOH | 3 | V | CON | FLR | CNT | FRC | 999.999 | 9999 | 9999.999 | 999.99 | 999.99 | 999.99 | 999.99 | 999.99 | 999.99 | 99.999 | | |
| 11 | MNS | ATX | 1 | NV | CON | RCL | CNT | FRC | 000.000 | 0000 | 0000.000 | 000.00 | 000.00 | 000.00 | 000.00 | 000.00 | 000.00 | 00.000 | | 24,84,85 |
| 11 | MNS | ATX | 1 | NV | CON | INC | CNT | FRC | 999.999 | 9999 | 9999.999 | 999.99 | 999.99 | 999.99 | 999.99 | 999.99 | 999.99 | 99.999 | | |
| 11 | MNS | ATX | 2 | NV | CON | FLR | CNT | FRC | 999.999 | 9999 | 9999.999 | 999.99 | 999.99 | 999.99 | 999.99 | 999.99 | 999.99 | 99.999 | | |
| 11 | MNS | ATX | 1 | V | CON | ATM | CNT | FRC | 999.999 | 9999 | 9999.999 | 999.99 | 999.99 | 999.99 | 999.99 | 999.99 | 999.99 | 99.999 | | |
| 12 | DP | OTX | 4 | V | CON | FLR | CNT | FRC | 999.999 | 9999 | 9999.999 | 999.99 | 999.99 | 999.99 | 999.99 | 999.99 | 999.99 | 99.999 | | 41,42,111 |
| 12 | DP | VTX | 2 | V | CON | BLR | CNT | FRC | 999.999 | 9999 | 9999.999 | 999.99 | 999.99 | 999.99 | 999.99 | 999.99 | 999.99 | 99.999 | | |
| 12 | MNS | PFL | 8 | V | SCB | RCL | CNT | FRC | 000.000 | 0000 | 0000.000 | 000.00 | 000.00 | 000.00 | 000.00 | 000.00 | 000.00 | 00.000 | | 84,85,112 |
| 13 | DP | OTX | 5 | V | CON | ATM | CNT | FRC | 999.999 | 9999 | 9999.999 | 999.99 | 999.99 | 999.99 | 999.99 | 999.99 | 999.99 | 99.999 | | 55,56,57 |
| 13 | DP | VTX | 9 | V | CON | ATM | CNT | FRC | 75.000 | 0 | 0.0 | 0.00 | 0.0 | 0.0 | 79.00 | 0.0 | 0.00 | 2.000 | X | |
| 14 | CO | BMD | 1 | NV | CON | ATM | CNT | FRC | 1.200 | 3643 | 0015.000 | 100.00 | 050.00 | 000.00 | 050.00 | 000.00 | 000.00 | 12.000 | X | 27 |
| 14 | CO | BMD | 1 | V | CON | ATM | CNT | FRC | 85.900 | 0104 | 0030.600 | 002.90 | 007.50 | 084.90 | 007.50 | 000.00 | 000.00 | 2.288 | | |
| 14 | WI | CCA | 2 | V | CON | RCL | CNT | FRC | 000.000 | 0000 | 0000.000 | 000.00 | 000.00 | 000.00 | 000.00 | 000.00 | 000.00 | 00.000 | | 113,114,115 |
| 14 | WI | CCA | 1 | NV | CON | RCL | CNT | FRC | 000.000 | 0000 | 0000.000 | 000.00 | 000.00 | 000.00 | 000.00 | 000.00 | 000.00 | 00.000 | | |
| 14 | MNS | ATX | 3 | V | CON | FLR | CNT | FRC | 999.999 | 9999 | 9999.999 | 999.99 | 999.99 | 999.99 | 999.99 | 999.99 | 999.99 | 99.999 | | 84,85,116 |
| 14 | MNS | ATX | 2 | NV | CON | FLR | CNT | FRC | 999.999 | 9999 | 9999.999 | 999.99 | 999.99 | 999.99 | 999.99 | 999.99 | 999.99 | 99.999 | | |
| 14 | MNS | ATX | 1 | NV | SCR | RCL | CNT | FRC | 000.000 | 0000 | 0000.000 | 000.00 | 000.00 | 000.00 | 000.00 | 000.00 | 000.00 | 00.000 | | |
| 14 | UCC | IWV | 2 | NV | SCB | ATM | CNT | FRC | 999.999 | 9999 | 9999.999 | 999.99 | 999.99 | 999.99 | 999.99 | 999.99 | 999.99 | 99.999 | | 87,88,117 |
| 14 | UCC | IWV | 2 | NV | CON | NON | CNT | FRC | 000.000 | 0000 | 0000.000 | 000.00 | 000.00 | 000.00 | 000.00 | 000.00 | 000.00 | 00.000 | | |
| 14 | UCC | IWV | 1 | V | CON | NON | CNT | FRC | 000.000 | 0000 | 0000.000 | 000.00 | 000.00 | 000.00 | 000.00 | 000.00 | 000.00 | 00.000 | | |
| 15 | FMC | BATX | 1 | NV | CON | NON | CNT | FRC | 000.000 | 0000 | 0000.000 | 000.00 | 000.00 | 000.00 | 000.00 | 000.00 | 000.00 | 00.000 | | 118,119,120 |
| 15 | FMC | BATX | 2 | NV | CON | RCL | CNT | FRC | 000.000 | 0000 | 0000.000 | 000.00 | 000.00 | 000.00 | 000.00 | 000.00 | 000.00 | 00.000 | | |
| 17 | S | DPTX | 1 | V | CON | RCL | CNT | FRC | 000.000 | 0000 | 0000.000 | 000.00 | 000.00 | 000.00 | 000.00 | 000.00 | 000.00 | 00.000 | | 10,11,121 |
| 17 | S | DPTX | 2 | NV | CON | FLR | CNT | FRC | 999.999 | 9999 | 9999.999 | 999.00 | 999.99 | 999.99 | 999.99 | 999.99 | 999.99 | 99.999 | | |
| 17 | S | DPTX | 1 | NV | CON | RCL | CNT | FRC | 000.000 | 0000 | 0000.000 | 000.00 | 000.00 | 000.00 | 000.00 | 000.00 | 000.00 | 00.000 | | |
| 17 | S | DPTX | 1 | NV | CON | RCL | CNT | FRC | 000.000 | 0000 | 0000.000 | 000.00 | 000.00 | 000.00 | 000.00 | 000.00 | 000.00 | 00.000 | | |
| 17 | S | DPTX | 1 | NV | CON | RCL | CNT | FRC | 000.000 | 0000 | 0000.000 | 000.00 | 000.00 | 000.00 | 000.00 | 000.00 | 000.00 | 00.000 | | |
| 17 | S | DPTX | 1 | NV | CON | INC | CNT | FRC | 999.999 | 9999 | 0011.600 | 999.99 | 999.99 | 999.99 | 999.99 | 999.99 | 999.99 | 99.999 | | |
| 18 | RU | GLA | 1 | NV | CON | ATM | CNT | FRC | 999.999 | 9999 | 9999.999 | 999.99 | 999.99 | 999.99 | 999.99 | 999.99 | 999.99 | 99.999 | | 28,29,30 |
| 18 | RU | GLA | 1 | NV | CON | ATM | CNT | FRC | 999.999 | 9999 | 9999.999 | 999.99 | 999.99 | 999.99 | 999.99 | 999.99 | 999.99 | 99.999 | | |
| 18 | RU | GLA | 1 | V | CON | ATM | CNT | FRC | 0.020 | 3047 | 0000.290 | 082.50 | 044.30 | 005.40 | 049.30 | 001.00 | 000.00 | 10.250 | | |
| 18 | RU | GLA | 1 | V | CON | ATM | CNT | FRC | 0.007 | 3752 | 0000.110 | 100.00 | 042.90 | 007.10 | 050.00 | 000.00 | 000.00 | 12.000 | | |
| 18 | RU | GLA | 1 | NV | CON | ATM | CNT | FRC | 999.999 | 9999 | 9999.999 | 999.99 | 999.99 | 999.99 | 999.99 | 999.99 | 999.99 | 99.999 | | |
| 18 | RU | GLA | 1 | NV | CON | ATM | CNT | FRC | 999.999 | 9999 | 9999.999 | 999.99 | 999.99 | 999.99 | 999.99 | 999.99 | 999.99 | 99.999 | | |
| 18 | RU | GLA | 1 | V | CON | ATM | CNT | FRC | 999.999 | 9999 | 9999.999 | 999.99 | 999.99 | 999.99 | 999.99 | 999.99 | 999.99 | 99.999 | | |
| 18 | RU | GLA | 1 | NV | CON | ATM | CNT | FRC | 999.999 | 9999 | 9999.999 | 999.99 | 999.99 | 999.99 | 999.99 | 999.99 | 999.99 | 99.999 | | |
| 18 | RU | GLA | 1 | V | CON | ATM | CNT | FRC | 999.999 | 9999 | 9999.999 | 999.99 | 999.99 | 999.99 | 999.99 | 999.99 | 999.99 | 99.999 | | |
| 18 | MOB | PPA | 3 | NV | CON | ATM | CNT | FRC | 999.999 | 9999 | 9999.999 | 999.99 | 999.99 | 999.99 | 999.99 | 999.99 | 999.99 | 99.999 | | 77 |
| 18 | MOB | PPA | 2 | V | CON | ATM | CNT | FRC | 999.999 | 9999 | 9999.999 | 999.99 | 999.99 | 999.99 | 999.99 | 999.99 | 999.99 | 99.999 | | |
| 19 | S | DPTX | 1 | NV | CON | FLR | CNT | FRC | 22.500 | 1453 | 0100.500 | 050.40 | 028.60 | 014.20 | 057.20 | 000.00 | 000.00 | 7.014 | X | 10,11,12 |
| 19 | NP | MIL | 1 | NV | CON | NON | CNT | FRC | 000.000 | 0000 | 0000.000 | 000.00 | 000.00 | 000.00 | 000.00 | 000.00 | 000.00 | 00.000 | | 125 |

| CH # | MFR | PLNT LOCN | NO COL | COL CND | PR EQUP | FINL CNTL | OPR MODE | DIST TYPE | FLOW SCFM | BTU/ SCF | VOC LB/HR | %VOC | %C | %N | %H | %O | %CL | ATOM NUMB | SCR NEP | REF NO |
|---|---|---|---|---|---|---|---|---|---|---|---|---|---|---|---|---|---|---|---|---|
| 19 | PT | HTX | 6 | NV | CON | NON | CNT | FRC | 000.000 | 0000 | 0000.000 | 000.00 | 000.00 | 000.00 | 000.00 | 000.00 | 000.00 | 00.000 | | 122,123,124 |
| 19 | PT | HTX | 1 | V | CON | ATM | CNT | FRC | 999.999 | 9999 | 9999.999 | 999.99 | 999.99 | 999.99 | 999.99 | 999.99 | 999.99 | 99.999 | | |
| 19 | PT | HTX | 1 | NV | CON | RCL | CNT | FRC | 000.000 | 0000 | 0000.000 | 000.00 | 000.00 | 000.00 | 000.00 | 000.00 | 000.00 | 00.000 | | |
| 19 | MBL | BTX | 2 | NV | CON | NON | CNT | FRC | 000.000 | 0000 | 0000.000 | 000.00 | 000.00 | 000.00 | 000.00 | 000.00 | 000.00 | 00.000 | | 126 |
| 20 | PT | HTX | 2 | NV | CON | NON | CNT | FRC | 000.000 | 0000 | 0000.000 | 000.00 | 000.00 | 000.00 | 000.00 | 000.00 | 000.00 | 00.000 | | 122,123,124 |
| 21 | CN | AGA | 1 | NV | CON | NON | CNT | FRC | 000.000 | 0000 | 0000.000 | 000.00 | 000.00 | 000.00 | 000.00 | 000.00 | 000.00 | 00.000 | | |
| 21 | CN | AGA | 3 | NV | CON | NON | CNT | FRC | 000.000 | 0000 | 0000.000 | 000.00 | 000.00 | 000.00 | 000.00 | 000.00 | 000.00 | 00.000 | | |
| 21 | CN | AGA | 2 | NV | CON | NON | CNT | FRC | 000.000 | 0000 | 0000.000 | 000.00 | 000.00 | 000.00 | 000.00 | 000.00 | 000.00 | 00.000 | | |
| 21 | CN | AGA | 4 | NV | CON | NON | CNT | FRC | 000.000 | 0000 | 0000.000 | 000.00 | 000.00 | 000.00 | 000.00 | 000.00 | 000.00 | 00.000 | | |
| 21 | DB | FTX | 4 | V | CON | NON | CNT | FRC | 000.000 | 0000 | 0000.000 | 000.00 | 000.00 | 000.00 | 000.00 | 000.00 | 000.00 | 00.000 | | 20,21,22 |
| 21 | DB | FTX | 1 | V | CON | ATM | CNT | FRC | 0.290 | 9999 | 9999.999 | 999.99 | 999.99 | 999.99 | 999.99 | 999.99 | 999.99 | 99.999 | | |
| 22 | PPG | NMWV | 1 | NV | CON | RCL | CNT | FRC | 000.000 | 0000 | 0000.000 | 000.00 | 000.00 | 000.00 | 000.00 | 000.00 | 000.00 | 00.000 | | |
| 22 | PPG | NMWV | 1 | NV | CON | NON | CNT | FRC | 000.000 | 0000 | 0000.000 | 000.00 | 000.00 | 000.00 | 000.00 | 000.00 | 000.00 | 00.000 | | |
| 23 | VU | GLA | 3 | NV | CON | NON | CNT | FRC | 000.000 | 0000 | 0000.000 | 000.00 | 000.00 | 000.00 | 000.00 | 000.00 | 000.00 | 00.000 | | 127,128,129 |
| 24 | MNS | SIL | 4 | V | CON | ATM | CNT | FLR | 999.999 | 9999 | 9999.999 | 999.99 | 999.99 | 999.99 | 999.99 | 999.99 | 999.99 | 99.999 | | 130 |
| 24 | MON | HMV | 1 | NV | SCB | ATM | CNT | FRC | 34.900 | 0495 | 0059.000 | 013.60 | 024.40 | 000.00 | 050.00 | 000.00 | 025.60 | 3.338 | X | 32 |
| 24 | MON | HNV | 1 | V | CON | ATM | CNT | FRC | 9.900 | 0177 | 0006.000 | 003.40 | 008.70 | 066.90 | 007.30 | 015.60 | 001.50 | 2.262 | | |
| 24 | PPG | NMWV | 1 | NV | CON | ATM | CNT | FRC | 0.020 | 0432 | 0000.031 | 012.50 | 022.60 | 043.40 | 022.60 | 011.30 | 000.00 | 3.252 | X | 33,34,35 |
| 24 | PPG | NMWV | 1 | V | CON | ATM | CNT | FLH | 26.100 | 0346 | 0043.100 | 010.10 | 017.70 | 051.10 | 015.50 | 013.60 | 002.10 | 3.014 | | |
| 24 | PPG | NMWV | 1 | NV | CON | ATM | CNT | FRC | 0.015 | 0755 | 0000.034 | 021.00 | 027.90 | 034.90 | 027.90 | 009.30 | 000.00 | 4.101 | | |
| 24 | PPG | NMWV | 1 | NV | CON | ATM | CNT | FRC | 0.012 | 0374 | 0000.025 | 010.80 | 018.80 | 050.00 | 015.60 | 012.50 | 003.10 | 3.082 | | |
| 24 | PPG | NMWV | 1 | NV | CON | ATM | CNT | FRC | 0.005 | 0133 | 0000.004 | 004.00 | 011.50 | 060.60 | 009.60 | 016.30 | 002.00 | 2.400 | | |
| 25 | DP | LKY | 3 | NV | CON | NON | CNT | FRC | 000.000 | 0000 | 0000.000 | 000.00 | 000.00 | 000.00 | 000.00 | 000.00 | 000.00 | 00.000 | | |
| 25 | DP | LKY | 1 | NV | CON | RCL | CNT | FRC | 000.000 | 0000 | 0000.000 | 000.00 | 000.00 | 000.00 | 000.00 | 000.00 | 000.00 | 00.000 | | |
| 25 | DP | LKY | 2 | NV | CON | RCL | CNT | FLH | 000.000 | 0000 | 0000.000 | 000.00 | 000.00 | 000.00 | 000.00 | 000.00 | 000.00 | 00.000 | | |
| 26 | DE | HTX | 1 | NV | SCB | ATM | CNT | FRC | 0.200 | 2778 | 0002.000 | 100.00 | 040.00 | 000.00 | 060.00 | 000.00 | 000.00 | 10.000 | X | 36,37,38 |
| 26 | DE | HTX | 2 | V | SCB | ATM | CNT | FRC | 1.800 | 0858 | 0004.900 | 031.40 | 028.40 | 022.80 | 042.70 | 006.00 | 000.00 | 4.514 | | |
| 26 | DE | HTX | 2 | V | SCB | ATM | CNT | FRC | 11.600 | 0030 | 0001.100 | 001.10 | 002.00 | 076.00 | 003.00 | 019.00 | 000.00 | 2.160 | | |
| 26 | DE | HTX | 2 | NV | CON | NON | CNT | FRC | 000.000 | 0000 | 0000.000 | 000.00 | 000.00 | 000.00 | 000.00 | 000.00 | 000.00 | 00.000 | | |
| 26 | DE | HTX | 1 | NV | SCB | ATM | CNT | FRC | 23.600 | 0000 | 0000.000 | 000.00 | 000.00 | 096.90 | 000.00 | 003.10 | 0.0 | 2.000 | | |
| 26 | DP | LPLA | 3 | V | CON | ATM | CNT | FRC | 145.000 | 12 | 7.200 | 0.40 | 0.80 | 77.00 | 1.30 | 20.30 | 0.40 | 2.038 | X | 92,93,94 |
| 26 | DP | LPLA | 1 | V | CON | ATM | CNT | FRC | 10.000 | 3 | 0.200 | 0.10 | 0.20 | 78.60 | 0.30 | 20.70 | 0.20 | 2.011 | | |
| 26 | DP | LPLA | 1 | V | CON | ATM | CNT | FRC | 0.400 | 2224 | 4.900 | 100.00 | 40.00 | 0.0 | 50.00 | 0.0 | 10.00 | 10.000 | | |
| 27 | S | DPTX | 4 | NV | CON | RCL | CNT | FRC | 000.000 | 0000 | 0000.000 | 000.00 | 000.00 | 000.00 | 000.00 | 000.00 | 000.00 | 00.000 | | 10,11,12 |
| 27 | ASH | CKY | 5 | NV | CON | NON | CNT | FRC | 000.000 | 0000 | 0000.000 | 000.00 | 000.00 | 000.00 | 000.00 | 000.00 | 000.00 | 00.000 | | |
| 27 | MNS | ATX | 1 | NV | CON | RCL | CNT | FRC | 000.000 | 0000 | 0000.000 | 000.00 | 000.00 | 000.00 | 000.00 | 000.00 | 000.00 | 00.000 | | 10,11,12 |
| 27 | MNS | ATX | 2 | NV | CON | NON | CNT | FRC | 000.000 | 0000 | 0000.000 | 000.00 | 000.00 | 000.00 | 000.00 | 000.00 | 000.00 | 00.000 | | |
| 27 | SUN | CCTX | 1 | NV | CON | RCL | CNT | FLH | 000.000 | 0000 | 0000.000 | 000.00 | 000.00 | 000.00 | 000.00 | 000.00 | 000.00 | 00.000 | | |
| 27 | SUN | CCTX | 1 | NV | CON | RCL | CNT | FRC | 000.000 | 0000 | 0000.000 | 000.00 | 000.00 | 000.00 | 000.00 | 000.00 | 000.00 | 00.000 | | 131,132,133 |
| 27 | SUN | CCTX | 1 | NV | CON | FLR | CNT | FRC | 999.999 | 9999 | 9999.999 | 999.99 | 999.99 | 999.99 | 999.99 | 999.99 | 999.99 | 99.999 | | |
| 27 | SUN | CCTX | 1 | NV | CON | NON | CNT | FRC | 000.000 | 0000 | 0000.000 | 000.00 | 000.00 | 000.00 | 000.00 | 000.00 | 000.00 | 00.000 | | |
| 27 | GULF | PATX | 2 | NV | CON | NON | CNT | FRC | 000.000 | 0000 | 0000.000 | 000.00 | 000.00 | 000.00 | 000.00 | 000.00 | 000.00 | 00.000 | | |
| 27 | GULF | PATX | 1 | NV | CON | RCL | CNT | FRC | 000.000 | 0000 | 0000.000 | 000.00 | 000.00 | 000.00 | 000.00 | 000.00 | 000.00 | 00.000 | | 134,135,136 |
| 27 | GULF | PATX | 2 | NV | CON | ATM | CNT | FRC | 000.000 | 0000 | 0000.000 | 000.00 | 000.00 | 000.00 | 000.00 | 000.00 | 000.00 | 00.000 | | |
| 27 | GULF | PATX | 1 | NV | CON | ATM | CNT | FRC | 000.000 | 0000 | 0000.000 | 000.00 | 000.00 | 000.00 | 000.00 | 000.00 | 000.00 | 00.000 | | |
| 28 | ALL | FPA | 4 | V | CON | ATM | CNT | FRC | 999.999 | 9999 | 0009.400 | 999.99 | 999.99 | 999.99 | 999.99 | 999.99 | 999.99 | 99.999 | | |
| 28 | USS | HOH | 2 | V | CON | ATM | CNT | FRC | 999.999 | 9999 | 9999.999 | 999.99 | 999.99 | 999.99 | 999.99 | 999.99 | 999.99 | 99.999 | | 101,102 |
| 28 | USS | HOH | 1 | NV | CON | ATM | CNT | FLH | 999.999 | 9999 | 9999.999 | 999.99 | 999.99 | 999.99 | 999.99 | 999.99 | 999.99 | 99.999 | | 137,103,104 |
| 28 | USS | HOH | 2 | V | CON | ATM | CNT | FRC | 999.999 | 9999 | 9999.999 | 999.99 | 999.99 | 999.99 | 999.99 | 999.99 | 999.99 | 99.999 | | |
| 28 | USS | HOH | 1 | NV | CON | ATM | CNT | FLH | 999.999 | 9999 | 9999.999 | 999.99 | 999.99 | 999.99 | 999.99 | 999.99 | 999.99 | 99.999 | | |
| 28 | CHEV | RCA | 3 | V | CON | INC | CNT | FLH | 999.999 | 9999 | 9999.999 | 999.99 | 999.99 | 999.99 | 999.99 | 999.99 | 999.99 | 99.999 | | 138,139 |
| 29 | CH | CCTX | 2 | NV | CON | FLR | CNT | FRC | 999.999 | 9999 | 9999.999 | 999.99 | 999.99 | 999.99 | 999.99 | 999.99 | 999.99 | 99.999 | | 140 |
| 29 | CO | BSTX | 1 | NV | CON | RCL | CNT | FRC | 000.000 | 0000 | 0000.000 | 000.00 | 000.00 | 000.00 | 000.00 | 000.00 | 000.00 | 00.000 | | 141,142,143 |
| 29 | PH | GPR | 1 | NV | CON | RCL | CNT | FRC | 000.000 | 0000 | 0000.000 | 000.00 | 000.00 | 000.00 | 000.00 | 000.00 | 000.00 | 00.000 | | 144,145,146 |
| 29 | SUL | TOK | 1 | NV | CON | RCL | CNT | FRC | 000.000 | 0000 | 0000.000 | 000.00 | 000.00 | 000.00 | 000.00 | 000.00 | 000.00 | 00.000 | | 147 |
| 29 | EXON | BTTX | 1 | NV | CON | RCL | CNT | FRC | 000.000 | 0000 | 0000.000 | 000.00 | 000.00 | 000.00 | 000.00 | 000.00 | 000.00 | 00.000 | | 148,149,150 |
| 29 | GOLF | PATX | 1 | NV | CON | NON | CNT | FRC | 000.000 | 0000 | 0000.000 | 000.00 | 000.00 | 000.00 | 000.00 | 000.00 | 000.00 | 00.000 | | 151,152,153 |
| 29 | GULF | PATX | 1 | NV | CON | RCL | CNT | FRC | 000.000 | 0000 | 0000.000 | 000.00 | 000.00 | 000.00 | 000.00 | 000.00 | 000.00 | 00.000 | | |
| 30 | DB | FTX | 6 | V | CON | NON | CNT | FRC | 000.000 | 0000 | 0000.000 | 000.00 | 000.00 | 000.00 | 000.00 | 000.00 | 000.00 | 00.000 | X | 40 |

| CH # | MFR | PLNT LOCN | NO COL | COL CND | PR EQUP | FINL CNTL | OPR MODE | DIST TYPE | FLOW SCFM | BTU/ SCF | VOC LB/HR | %VOC | %C | %N | %H | %O | %CL | ATOM NUMB | SCR MEP | REF NO |
|---|---|---|---|---|---|---|---|---|---|---|---|---|---|---|---|---|---|---|---|---|
| 30 | DB | FTX | 1 | V | CON | ATM | CNT | FRC | 68.700 | 0072 | 0026.300 | 002.50 | 006.10 | 064.10 | 011.70 | 018.10 | 000.00 | 2.383 | | |
| 30 | NI | RGA | 4 | V | CON | NON | CNT | FRC | 000.000 | 0000 | 0000.000 | 000.00 | 000.00 | 000.00 | 000.00 | 000.00 | 000.00 | 00.000 | | 154,155 |
| 30 | NI | AGA | 5 | V | CON | NON | CNT | FRC | 000.000 | 0000 | 0000.000 | 000.00 | 000.00 | 000.00 | 000.00 | 000.00 | 000.00 | 00.000 | | |
| 30 | UC | TLA | 3 | V | CON | ATM | CNT | FRC | 22.701 | 18 | 15.000 | 0.50 | 1.40 | 96.30 | 2.30 | 0.0 | 0.00 | 2.070 | X | 86,87,88 |
| 30 | MNS | PFL | 8 | NV | SCB | ATM | CNT | FRC | 999.999 | 9999 | 9999.999 | 999.99 | 999.99 | 999.99 | 999.99 | 999.99 | 999.99 | 99.999 | | 84,85,157 |
| 30 | MNS | PFL | 2 | V | SCB | ATM | CNT | FRC | 999.999 | 9999 | 9999.999 | 999.99 | 999.99 | 999.99 | 999.99 | 999.99 | 999.99 | 99.999 | | |
| 31 | MON | HNV | 1 | NV | CON | NON | CNT | FRC | 000.000 | 0000 | 0000.000 | 000.00 | 000.00 | 000.00 | 000.00 | 000.00 | 000.00 | 00.000 | X | 32 |
| 31 | MON | HNV | 1 | V | CON | ATM | CNT | FRC | 2.900 | 0177 | 0002.000 | 003.40 | 002.60 | 075.50 | 001.60 | 020.20 | 000.00 | 2.091 | | |
| 31 | MON | HNV | 1 | V | CON | RCL | CNT | FLH | 000.000 | 0000 | 0000.000 | 000.00 | 000.00 | 000.00 | 000.00 | 000.00 | 000.00 | 00.000 | | |
| 31 | PPG | NHWV | 1 | V | CON | ATM | CNT | FLH | 1.800 | 0651 | 0008.100 | 021.10 | 032.70 | 035.90 | 021.80 | 009.50 | 000.10 | 4.107 | X | 33,34,35 |
| 31 | PPG | NHWV | 1 | V | CON | ATM | CNT | FRC | 2.600 | 0062 | 0001.300 | 002.00 | 005.70 | 072.70 | 003.80 | 017.80 | 000.00 | 2.200 | | |
| 32 | DP | CWNJ | 2 | NV | CON | NON | CNT | FRC | 000.000 | 0000 | 0000.000 | 000.00 | 000.00 | 000.00 | 000.00 | 000.00 | 000.00 | 00.000 | | 158,159,160 |
| 32 | ALL | DIL | 2 | NV | CON | NON | CNT | FRC | 000.000 | 0000 | 0000.000 | 000.00 | 000.00 | 000.00 | 000.00 | 000.00 | 000.00 | 00.000 | | 161,162,163 |
| 32 | ALL | DIL | 1 | NV | CON | ATM | CNT | FRC | 4.500 | 9999 | 0006.200 | 006.00 | 999.99 | 999.99 | 999.99 | 999.99 | 999.99 | 99.999 | | |
| 33 | DP | OHTN | 1 | NV | CON | ATM | CNT | FRC | 8.400 | 0236 | 0013.000 | 030.80 | 009.50 | 043.10 | 037.90 | 009.50 | 000.00 | 3.191 | X | 40,41,42 |
| 33 | DP | OHTN | 2 | V | CON | ATM | CNT | FRC | 54.600 | 0047 | 0017.000 | 006.10 | 002.70 | 083.60 | 011.00 | 002.70 | 000.00 | 2.043 | | |
| 33 | DP | OHTN | 2 | V | CON | ATM | CNT | FRC | 8.900 | 0047 | 0002.200 | 006.60 | 002.90 | 082.60 | 011.60 | 002.90 | 000.00 | 2.239 | | |
| 33 | DP | OHTN | 1 | NV | CON | ATM | CNT | FRC | 4.200 | 0180 | 0005.000 | 023.50 | 008.00 | 052.00 | 032.00 | 008.00 | 000.00 | 3.026 | | |
| 33 | DP | OHTN | 1 | NV | CON | ATM | CNT | FRC | 123.800 | 0768 | 0628.200 | 100.00 | 016.70 | 000.00 | 066.60 | 016.70 | 000.00 | 6.000 | | |
| 33 | DP | CFNC | 1 | NV | CON | ATM | CNT | FRC | 15.000 | 0236 | 0012.000 | 015.80 | 006.00 | 064.00 | 024.00 | 006.00 | 000.00 | 5.186 | X | |
| 33 | DP | CFNC | 2 | V | CON | ATM | CNT | FRC | 176.000 | 0047 | 0057.000 | 006.40 | 002.80 | 083.00 | 011.30 | 002.90 | 000.00 | 2.246 | | |
| 33 | DP | CFNC | 2 | V | CON | ATM | CNT | FRC | 15.000 | 0047 | 0005.000 | 006.60 | 002.90 | 082.60 | 011.60 | 002.90 | 000.00 | 2.239 | | |
| 33 | DP | CFNC | 1 | NV | CON | INC | CNT | FRC | 281.000 | 0768 | 1426.000 | 100.00 | 016.70 | 000.00 | 066.00 | 016.70 | 000.00 | 6.000 | | |
| 33 | DP | CFNC | 1 | NV | CON | ATM | CNT | FRC | 7.000 | 0000 | 0010.000 | 999.99 | 999.99 | 999.99 | 999.99 | 999.99 | 999.99 | 3.026 | | |
| 33 | DP | CFNC | 1 | NV | CON | RCL | CNT | FRC | 000.000 | 0000 | 0000.000 | 000.00 | 000.00 | 000.00 | 000.00 | 000.00 | 000.00 | 00.000 | | |
| 33 | TE | KTN | 1 | NV | CON | ATM | CNT | FRC | 17.400 | 1282 | 0120.500 | 100.00 | 021.90 | 000.00 | 064.80 | 013.30 | 000.00 | 8.127 | X | |
| 33 | TE | KTN | 1 | NV | CON | ATM | CNT | FRC | 79.300 | 1453 | 0601.000 | 100.00 | 023.10 | 000.00 | 064.30 | 012.60 | 000.00 | 8.810 | | 8,9,43 |
| 33 | TE | KTN | 1 | NV | CON | NON | CNT | FRC | 000.000 | 0000 | 0000.000 | 000.00 | 000.00 | 000.00 | 000.00 | 000.00 | 000.00 | 00.000 | | |
| 33 | TE | KTN | 1 | V | CON | ATM | CNT | FRC | 0.300 | 4978 | 0004.900 | 100.00 | 044.40 | 000.00 | 055.60 | 000.00 | 000.00 | 18.000 | | |
| 33 | TE | KTN | 2 | V | CON | ATM | CNT | FRC | 999.999 | 9999 | 9999.999 | 999.99 | 999.99 | 999.99 | 999.99 | 999.99 | 999.99 | 99.999 | | |
| 33 | TE | KTN | 1 | NV | CON | NON | CNT | FRC | 000.000 | 0000 | 0000.000 | 000.00 | 000.00 | 000.00 | 000.00 | 000.00 | 000.00 | 00.000 | | |
| 34 | RU | GLA | 1 | NV | CON | ATM | CNT | FRC | 999.999 | 9999 | 9999.999 | 999.99 | 999.99 | 999.99 | 999.99 | 999.99 | 999.99 | 99.999 | | |
| 35 | RU | GLA | 2 | NV | CON | ATM | CNT | FRC | 999.999 | 9999 | 9999.999 | 999.99 | 999.99 | 999.99 | 999.99 | 999.99 | 999.99 | 99.999 | X | 28,29,30 |
| 35 | RU | GLA | 1 | V | CON | ATM | CNT | FRC | 2.000 | 0000 | 0000.003 | 000.00 | 000.00 | 079.00 | 000.00 | 021.00 | 000.00 | 2.000 | | |
| 36 | S | DPTX | 1 | NV | SCB | ATM | CNT | FRC | 999.999 | 9999 | 9999.999 | 999.99 | 999.99 | 999.99 | 999.99 | 999.99 | 999.99 | 99.999 | | |
| 36 | S | DPTX | 3 | V | SCB | ATM | CNT | FRC | 999.999 | 9999 | 9999.999 | 999.99 | 999.99 | 999.99 | 999.99 | 999.99 | 999.99 | 99.999 | | 68,69,164 |
| 37 | UC | SCWV | 1 | NV | CON | NON | CNT | FRC | 000.000 | 0000 | 0000.000 | 000.00 | 000.00 | 000.00 | 000.00 | 000.00 | 000.00 | 00.000 | | |
| 38 | OL | BKY | 1 | NV | CON | NON | CNT | FRC | 000.000 | 0000 | 0000.000 | 000.00 | 000.00 | 000.00 | 000.00 | 000.00 | 000.00 | 00.000 | X | |
| 38 | OL | BKY | 1 | V | CON | ATM | CNT | FRC | 4.300 | 0000 | 0000.000 | 000.00 | 000.00 | 079.00 | 000.00 | 021.00 | 000.00 | 2.000 | | 44,45 |
| 38 | OL | BKY | 3 | V | CON | ATM | CNT | FRC | 19.500 | 0000 | 0000.000 | 000.00 | 000.00 | 079.00 | 000.00 | 021.00 | 000.00 | 2.000 | | |
| 39 | UCC | TLA | 2 | V | CON | ATM | CNT | FRC | 27.200 | 69 | 5.600 | 1.80 | 4.00 | 71.20 | 12.80 | 12.00 | 000.00 | 2.291 | X | |
| 39 | UCC | TLA | 2 | V | CON | ATM | CNT | FRC | 219.800 | 45 | 454.000 | 1.60 | 3.00 | 85.30 | 7.60 | 4.10 | 000.00 | 2.211 | | 15,16,23 |
| 40 | TE | KTN | 2 | NV | CON | NON | CNT | FRC | 000.000 | 0000 | 0000.000 | 000.00 | 000.00 | 000.00 | 000.00 | 000.00 | 000.00 | 00.000 | | 8,43,165 |
| 40 | UC | SCWV | 1 | NV | CON | ATM | CNT | FRC | 2.300 | 1012 | 0006.400 | 029.00 | 023.60 | 004.50 | 062.90 | 009.00 | 000.00 | 6.157 | X | |
| 40 | UC | SCWV | 1 | NV | CON | ATM | CNT | FRC | 0.700 | 0680 | 0000.400 | 014.70 | 020.20 | 016.30 | 054.60 | 008.90 | 000.00 | 4.420 | | |
| 40 | UC | SCWV | 6 | NV | CON | NON | CNT | FRC | 000.000 | 0000 | 0000.000 | 000.00 | 000.00 | 000.00 | 000.00 | 000.00 | 000.00 | 00.000 | | |
| 41 | AMH | BRLA | 4 | NV | CAD | ATM | CNT | FRC | 999.999 | 9999 | 9999.999 | 999.99 | 999.99 | 999.99 | 999.99 | 999.99 | 999.99 | 99.999 | | 166 |
| 41 | AMH | BRLA | 1 | V | CAD | ATM | CNT | FRC | 999.999 | 9999 | 9999.999 | 999.99 | 999.99 | 999.99 | 999.99 | 999.99 | 999.99 | 99.999 | | |
| 41 | MNS | TCTX | 1 | NV | CON | ATM | CNT | FRC | 0.063 | 0007 | 0000.000 | 000.60 | 000.60 | 098.80 | 000.60 | 000.00 | 000.00 | 00.000 | | 84,85,167 |
| 41 | MNS | TCTX | 1 | V | CON | RCL | CNT | FRC | 000.000 | 0000 | 0000.000 | 000.00 | 000.00 | 000.00 | 000.00 | 000.00 | 000.00 | 00.000 | | |
| 41 | MNS | TCTX | 2 | NV | CON | RCL | CNT | FRC | 000.000 | 0000 | 0000.000 | 000.00 | 000.00 | 000.00 | 000.00 | 000.00 | 000.00 | 00.000 | | |
| 41 | SUN | CCTX | 5 | NV | CON | NON | CNT | FRC | 000.000 | 0000 | 0000.000 | 000.00 | 000.00 | 000.00 | 000.00 | 000.00 | 000.00 | 00.000 | | 132,133,168 |
| 41 | SUN | CCTX | 1 | NV | CON | RCL | CNT | FLH | 000.000 | 0000 | 0000.000 | 000.00 | 000.00 | 000.00 | 000.00 | 000.00 | 000.00 | 00.000 | | |
| 41 | ELPP | ODTX | 4 | NV | CON | NON | CNT | FRC | 000.000 | 0000 | 0000.000 | 000.00 | 000.00 | 000.00 | 000.00 | 000.00 | 000.00 | 00.000 | | 169,170,171 |
| 41 | GULF | SJLA | 1 | NV | CON | NON | CNT | FRC | 000.000 | 0000 | 0000.000 | 000.00 | 000.00 | 000.00 | 000.00 | 000.00 | 000.00 | 00.000 | X | 46,47,48 |
| 41 | GULF | SJLA | 1 | NV | CON | RCL | CNT | FRC | 000.000 | 0000 | 0000.000 | 000.00 | 000.00 | 000.00 | 000.00 | 000.00 | 000.00 | 00.000 | | |
| 41 | GULF | SJLA | 1 | V | CON | ATM | CNT | FRC | 19.700 | 0000 | 0000.000 | 000.00 | 000.00 | 079.00 | 000.00 | 021.00 | 000.00 | 2.000 | | |
| 41 | GULF | SJLA | 1 | NV | CON | FLR | CNT | FRC | 6.600 | 1286 | 0003.000 | 003.70 | 024.80 | 000.00 | 075.20 | 000.00 | 000.00 | 11.304 | | |
| 42 | DP | OTX | 4 | NV | CON | NON | CNT | FRC | 000.000 | 0000 | 0000.000 | 000.00 | 000.00 | 000.00 | 000.00 | 000.00 | 000.00 | 00.000 | | 56,57,172 |
| 42 | DP | OTX | 1 | NV | CON | RCL | CNT | FRC | 000.000 | 0000 | 0000.000 | 000.00 | 000.00 | 000.00 | 000.00 | 000.00 | 000.00 | 00.000 | | |

| CH # | MFR | PLNT LOCN | NO COL | COL CND | PR EQUP | FINL CNTL | OPR MODE | DIST TYPE | FLOW SCFM | BTU/ SCF | VOC LB/HR | %VOC | %C | %N | %H | %O | %CL | ATOM NUMB | SCR NEP | REF NO |
|---|---|---|---|---|---|---|---|---|---|---|---|---|---|---|---|---|---|---|---|---|
| 42 | NP | MIL | 1 | NV | CON | FLR | CNT | FRC | 999.999 | 9999 | 9999.999 | 999.99 | 999.99 | 999.99 | 999.99 | 999.99 | 999.99 | 99.999 | | |
| 42 | NP | MIL | 3 | NV | CON | RCL | CNT | FRC | 000.000 | 0000 | 0000.000 | 000.00 | 000.00 | 000.00 | 000.00 | 000.00 | 000.00 | 00.000 | | |
| 42 | NP | MIL | 1 | NV | CON | NON | CNT | FRC | 000.000 | 0000 | 0000.000 | 000.00 | 000.00 | 000.00 | 000.00 | 000.00 | 000.00 | 00.000 | | |
| 42 | PH | STX | 2 | NV | CON | NON | CNT | FRC | 000.000 | 0000 | 0000.000 | 000.00 | 000.00 | 000.00 | 000.00 | 000.00 | 000.00 | 00.000 | | 145,146,173 |
| 42 | PH | STX | 3 | NV | CON | RCL | CNT | FRC | 000.000 | 0000 | 0000.000 | 000.00 | 000.00 | 000.00 | 000.00 | 000.00 | 000.00 | 00.000 | | |
| 42 | PH | STX | 1 | V | CON | RCL | CNT | FRC | 000.000 | 0000 | 0000.000 | 000.00 | 000.00 | 000.00 | 000.00 | 000.00 | 000.00 | 00.000 | | |
| 42 | BFG | CCKY | 3 | NV | CON | RCL | CNT | FRC | 000.000 | 0000 | 0000.000 | 000.00 | 000.00 | 000.00 | 000.00 | 000.00 | 000.00 | 00.000 | | 174 |
| 42 | BFG | CCKY | 1 | NV | CON | FLR | CNT | FRC | 000.000 | 0000 | 0000.000 | 000.00 | 000.00 | 000.00 | 000.00 | 000.00 | 000.00 | 00.000 | | |
| 42 | BFG | CCKY | 1 | NV | CON | NON | CNT | FRC | 000.000 | 0000 | 0000.000 | 000.00 | 000.00 | 000.00 | 000.00 | 000.00 | 000.00 | 00.000 | | |
| 42 | MBL | BTX | 3 | NV | CON | RCL | CNT | FRC | 000.000 | 0000 | 0000.000 | 000.00 | 000.00 | 000.00 | 000.00 | 000.00 | 000.00 | 00.000 | | 175 |
| 42 | ARCO | CVTX | 7 | NV | CON | RCL | CNT | FRC | 000.000 | 0000 | 0000.000 | 000.00 | 000.00 | 000.00 | 000.00 | 000.00 | 000.00 | 00.000 | | 176,177,178 |
| 42 | ARCO | CVTX | 4 | NV | CON | NON | CNT | FRC | 000.000 | 0000 | 0000.000 | 000.00 | 000.00 | 000.00 | 000.00 | 000.00 | 000.00 | 00.000 | | |
| 43 | S | DPTX | 4 | NV | CON | INC | CNT | FRC | 999.999 | 9999 | 9999.999 | 999.99 | 999.99 | 999.99 | 999.99 | 999.99 | 999.99 | 99.999 | | |
| 43 | CO | LCLA | 1 | NV | CON | INC | CNT | FRC | 8.100 | 0091 | 0006.600 | 006.30 | 025.20 | 010.00 | 058.20 | 000.30 | 016.30 | 3.125 | X | 49,50,51 |
| 43 | CO | LCLA | 1 | NV | CON | INC | CNT | FRC | 535.500 | 0804 | 3050.000 | 059.80 | 026.80 | 010.00 | 059.80 | 000.10 | 013.30 | 3.934 | | |
| 43 | CO | LCLA | 1 | NV | CON | INC | CNT | FRC | 100.000 | 0006 | 0008.300 | 000.60 | 000.60 | 096.10 | 001.10 | 001.90 | 000.30 | 2.023 | | |
| 43 | VU | GLA | 1 | NV | CON | INC | CNT | FRC | 999.999 | 9999 | 9999.999 | 999.99 | 999.99 | 999.99 | 999.99 | 999.99 | 999.99 | 99.999 | | 128,129,179 |
| 43 | VU | GLA | 1 | NV | CON | NON | CNT | FRC | 000.000 | 0000 | 0000.000 | 000.00 | 000.00 | 000.00 | 000.00 | 000.00 | 000.00 | 00.000 | | |
| 43 | BFG | CCKY | 1 | V | CON | INC | CNT | FRC | 13.000 | 0183 | 0032.300 | 024.70 | 009.30 | 042.70 | 027.10 | 011.60 | 009.30 | 2.885 | X | 52 |
| 43 | BFG | CCKY | 2 | NV | CON | INC | CNT | FRC | 6.000 | 0727 | 0063.900 | 100.00 | 025.00 | 000.00 | 025.00 | 000.00 | 025.00 | 5.000 | | |
| 43 | BFG | CCKY | 1 | V | CON | INC | CNT | FRC | 4.800 | 0053 | 0003.900 | 005.10 | 004.40 | 064.80 | 008.80 | 017.60 | 004.40 | 2.306 | | |
| 43 | BFG | CCKY | 1 | NV | CON | INC | CNT | FRC | 12.500 | 0727 | 0098.800 | 100.00 | 060.00 | 000.00 | 020.00 | 000.00 | 020.00 | 5.000 | | |
| 43 | BFG | CCKY | 1 | NV | CON | INC | CNT | FRC | 6.940 | 0727 | 0055.000 | 100.00 | 060.00 | 000.00 | 020.00 | 000.00 | 020.00 | 5.000 | | |
| 43 | BFG | CCKY | 1 | NV | CON | INC | CNT | FRC | 2.400 | 1024 | 0038.000 | 100.00 | 025.00 | 000.00 | 050.00 | 000.00 | 025.00 | 8.000 | | |
| 43 | BFG | CCKY | 1 | V | CON | INC | CNT | FRC | 0.900 | 1024 | 0014.000 | 100.00 | 025.00 | 000.00 | 050.00 | 000.00 | 025.00 | 8.000 | | |
| 43 | ICI | BRLA | 3 | NV | CON | RCL | CNT | FRC | 000.000 | 0000 | 0000.000 | 000.00 | 000.00 | 000.00 | 000.00 | 000.00 | 000.00 | 00.000 | | 179,180,181 |
| 43 | ICI | BRLA | 1 | V | CON | NON | CNT | FRC | 000.000 | 0000 | 0000.000 | 000.00 | 000.00 | 000.00 | 000.00 | 000.00 | 000.00 | 00.000 | | |
| 43 | PPG | LCLA | 6 | NV | CON | INC | CNT | FRC | 999.999 | 9999 | 9999.999 | 999.99 | 999.99 | 999.99 | 999.99 | 999.99 | 999.99 | 99.999 | | 34,35,182 |
| 43 | PPG | LCLA | 2 | NV | CON | INC | CNT | FRC | 999.999 | 9999 | 9999.999 | 999.99 | 999.99 | 999.99 | 999.99 | 999.99 | 999.99 | 99.999 | | |
| 43 | PPG | LCLA | 2 | NV | CON | NON | CNT | FRC | 999.999 | 9999 | 9999.999 | 999.99 | 999.99 | 999.99 | 999.99 | 999.99 | 999.99 | 99.999 | | |
| 44 | S | GLA | 1 | NV | CON | RCL | CNT | FLH | 000.000 | 0000 | 0000.000 | 000.00 | 000.00 | 000.00 | 000.00 | 000.00 | 000.00 | 00.000 | X | 11,12,53 |
| 44 | S | GLA | 1 | NV | CON | NON | CNT | FRC | 000.000 | 0000 | 0000.000 | 000.00 | 000.00 | 000.00 | 000.00 | 000.00 | 000.00 | 00.000 | | |
| 44 | S | GLA | 6 | V | CON | ATM | CNT | FRC | 75.100 | 0000 | 0000.000 | 000.00 | 000.00 | 079.00 | 000.00 | 021.00 | 000.00 | 2.000 | | |
| 44 | CA | LCLA | 2 | NV | CON | ATM | CNT | FRC | 999.999 | 9999 | 9999.999 | 999.99 | 999.99 | 999.99 | 999.99 | 999.99 | 999.99 | 99.999 | | 183 |
| 44 | CA | LCLA | 2 | V | CON | ATM | CNT | FRC | 600.000 | 0000 | 9999.999 | 999.99 | 999.99 | 999.99 | 999.99 | 999.99 | 999.99 | 99.999 | | |
| 44 | BASF | GLA | 5 | V | CON | ATM | CNT | FRC | 999.999 | 9999 | 9999.999 | 999.99 | 999.99 | 999.99 | 999.99 | 999.99 | 999.99 | 99.999 | | 184,185,186 |
| 44 | BASF | GLA | 1 | V | CON | RCL | CNT | FLH | 000.000 | 0000 | 0000.000 | 000.00 | 000.00 | 000.00 | 000.00 | 000.00 | 000.00 | 00.000 | | |
| 45 | CA | LCLA | 4 | NV | CON | RCL | CNT | FRC | 000.000 | 0000 | 0000.000 | 000.00 | 000.00 | 000.00 | 000.00 | 000.00 | 000.00 | 00.000 | | 187 |
| 45 | UC | SETX | 2 | NV | SCB | ATM | CNT | FRC | 999.999 | 9999 | 9999.999 | 999.99 | 999.99 | 999.99 | 999.99 | 999.99 | 999.99 | 99.999 | | 15,16,183 |
| 45 | UC | SETX | 1 | NV | CON | NON | CNT | FRC | 000.000 | 0000 | 0000.000 | 000.00 | 000.00 | 000.00 | 000.00 | 000.00 | 000.00 | 00.000 | | |
| 45 | PPG | BTX | 1 | NV | CON | ATM | CNT | FRC | 2.300 | 1191 | 0013.800 | 086.30 | 028.80 | 000.00 | 053.50 | 017.70 | 000.00 | 00.000 | | 34,35 |
| 45 | PPG | BTX | 2 | NV | CON | NON | CNT | FRC | 000.000 | 0000 | 0000.000 | 000.00 | 000.00 | 000.00 | 000.00 | 000.00 | 000.00 | 00.000 | | |
| 45 | BASF | GLA | 2 | NV | CON | RCL | CNT | FRC | 000.000 | 0000 | 0000.000 | 000.00 | 000.00 | 000.00 | 000.00 | 000.00 | 000.00 | 00.000 | | 184,185,189 |
| 46 | DB | FTX | 3 | V | CON | ATM | CNT | FRC | 999.999 | 9999 | 9999.999 | 999.99 | 999.99 | 999.99 | 999.99 | 999.99 | 999.99 | 99.999 | | 190 |
| 47 | BR | FNC | 2 | NV | CON | RCL | CNT | FRC | 000.000 | 0000 | 0000.000 | 000.00 | 000.00 | 000.00 | 000.00 | 000.00 | 000.00 | 00.000 | | 54,191,192,193 |
| 47 | CE | BITX | 3 | NV | CON | NON | CNT | FRC | 000.000 | 0000 | 0000.000 | 000.00 | 000.00 | 000.00 | 000.00 | 000.00 | 000.00 | 00.000 | | 54,194,195,196 |
| 47 | NO | NTNY | 1 | V | CON | NON | CNT | FRC | 000.000 | 0000 | 0000.000 | 000.00 | 000.00 | 000.00 | 000.00 | 000.00 | 000.00 | 00.000 | | 54,197,198 |
| 47 | TN | GNJ | 2 | V | SCB | ATM | CNT | FRC | 12.500 | 0009 | 0000.800 | 001.30 | 000.60 | 061.20 | 014.90 | 023.30 | 000.00 | 2.000 | X | 54 |
| 47 | MNS | ATX | 1 | V | CON | ATM | CNT | FRC | 999.999 | 9999 | 9999.999 | 999.99 | 999.99 | 999.99 | 999.99 | 999.99 | 999.99 | 99.999 | | 54,84,85 |
| 48 | UC | SCWV | 1 | NV | CON | NON | CNT | FRC | 000.000 | 0000 | 0000.000 | 000.00 | 000.00 | 000.00 | 000.00 | 000.00 | 000.00 | 00.000 | | 199 |
| 49 | FMC | BATX | 2 | NV | CON | RCL | CNT | FRC | 000.000 | 0000 | 0000.000 | 000.00 | 000.00 | 000.00 | 000.00 | 000.00 | 000.00 | 00.000 | | 200,201,202 |
| 49 | FMC | BATX | 1 | V | CON | RCL | CNT | FRC | 000.000 | 0000 | 0000.000 | 000.00 | 000.00 | 000.00 | 000.00 | 000.00 | 000.00 | 00.000 | | |
| 50 | FMC | BATX | 2 | V | CON | RCL | CNT | FLH | 000.000 | 0000 | 0000.000 | 000.00 | 000.00 | 000.00 | 000.00 | 000.00 | 000.00 | 00.000 | | |
| 50 | FMC | BATX | 3 | NV | CON | RCL | CNT | FRC | 000.000 | 0000 | 0000.000 | 000.00 | 000.00 | 000.00 | 000.00 | 000.00 | 000.00 | 00.000 | | |
| 50 | FMC | BATX | 3 | V | CON | RCL | CNT | FRC | 000.000 | 0000 | 0000.000 | 000.00 | 000.00 | 000.00 | 000.00 | 000.00 | 000.00 | 00.000 | | |
| 51 | DP | OTX | 1 | NV | SCB | ATM | CNT | FRC | 999.999 | 9999 | 9999.999 | 999.99 | 999.99 | 999.99 | 999.99 | 999.99 | 999.99 | 99.999 | | 55,56,57 |
| 51 | DP | OTX | 7 | V | ABS | ATM | CNT | FRC | 999.999 | 9999 | 9999.999 | 999.99 | 999.99 | 999.99 | 999.99 | 999.99 | 999.99 | 99.999 | | |
| 51 | DP | VTX | 1 | NV | CON | RCL | CNT | FRC | 000.000 | 0000 | 0000.000 | 000.00 | 000.00 | 000.00 | 000.00 | 000.00 | 000.00 | 00.000 | | |
| 51 | DP | VTX | 7 | V | CON | ATM | CNT | FRC | 81.100 | 0000 | 0000.000 | 000.00 | 000.00 | 100.00 | 000.00 | 000.00 | 000.00 | 2.000 | | |
| 51 | DP | VTX | 1 | NV | CON | BLR | CNT | FRC | 999.999 | 9999 | 9999.999 | 999.99 | 999.99 | 999.99 | 999.99 | 999.99 | 999.99 | 99.999 | | |

| CH # | MFR | PLNT LOCN | NO COL | COL CND | PR EQUP | FINL CNTL | OPR MODE | DIST TYPE | FLOW SCFM | BTU/ SCF | VOC LB/HR | ZVOC | ZC | ZH | ZH | ZO | ZCL | ATOM NUMB | SCR REP | REF NO |
|---|---|---|---|---|---|---|---|---|---|---|---|---|---|---|---|---|---|---|---|---|
| 51 | DP | VTX | 1 | NV | SCR | ATM | CNT | FRC | 999.999 | 9999 | 9999.999 | 999.99 | 999.99 | 999.99 | 999.99 | 999.99 | 999.99 | 99.999 | | |
| 52 | AC | FOLA | 1 | NV | CON | FLR | CNT | FRC | 999.999 | 9999 | 9999.999 | 999.99 | 999.99 | 999.99 | 999.99 | 999.99 | 999.99 | 99.999 | | |
| 52 | DP | BTX | 1 | NV | CON | FLR | CNT | FRC | 999.999 | 9999 | 9999.999 | 999.99 | 999.99 | 999.99 | 999.99 | 999.99 | 999.99 | 99.999 | | 203 |
| 52 | RH | DPTX | 5 | NV | CON | FLR | CNT | FRC | 999.999 | 9999 | 9999.999 | 999.99 | 999.99 | 999.99 | 999.99 | 999.99 | 999.99 | 99.999 | | |
| 53 | DB | FTX | 1 | NV | CON | NON | CNT | FRC | 000.000 | 0000 | 0000.000 | 000.00 | 000.00 | 000.00 | 000.00 | 000.00 | 000.00 | 00.000 | | |
| 54 | DB | FTX | 1 | NV | CON | RCL | CNT | FRC | 000.000 | 0000 | 0000.000 | 000.00 | 000.00 | 000.00 | 000.00 | 000.00 | 000.00 | 00.000 | | |
| 55 | USS | NOH | 1 | V | CON | ATM | CNT | FRC | 999.999 | 9999 | 9999.999 | 999.99 | 999.99 | 999.99 | 999.99 | 999.99 | 999.99 | 99.999 | | |
| 56 | USS | NOH | 4 | V | CON | ATM | CNT | FRC | 999.999 | 9999 | 9999.999 | 999.99 | 999.99 | 999.99 | 999.99 | 999.99 | 999.99 | 99.999 | | |
| 57 | AM | JIL | 1 | NV | CON | ATM | CNT | FRC | 637.000 | 0019 | 0123.000 | 002.00 | 001.90 | 092.40 | 003.80 | 001.90 | 000.00 | 2.122 | X | 58 |
| 57 | AM | JIL | 1 | NV | CON | ATM | BTH | FRC | 999.999 | 9999 | 9999.999 | 999.99 | 999.99 | 999.99 | 999.99 | 999.99 | 999.99 | 99.999 | | |
| 58 | AM | JIL | 3 | V | CON | ATM | CNT | FRC | 0.200 | 0000 | 0000.000 | 000.00 | 000.00 | 076.30 | 002.40 | 021.30 | 000.00 | 2.000 | | |
| 58 | DE | HTX | 1 | NV | CON | ATM | CNT | FRC | 999.999 | 9999 | 9999.99 | 999.99 | 999.99 | 999.99 | 999.99 | 999.99 | 999.99 | 99.999 | | 60,37,38 |
| 58 | DE | HTX | 1 | V | CON | ATM | BTH | FRC | 999.999 | 9999 | 9999.99 | 999.99 | 999.99 | 999.99 | 999.99 | 999.99 | 999.99 | 99.999 | | |
| 58 | KO | BPA | 1 | V | SCB | ATM | CNT | FRC | 6.500 | 0000 | 0000.00 | 000.00 | 000.00 | 079.00 | 000.00 | 021.00 | 000.00 | 2.000 | X | 60,80,81 |
| 58 | MNS | SLMO | 1 | V | CON | RCL | CNT | FRC | 000.000 | 0000 | 0000.000 | 000.00 | 000.00 | 000.00 | 000.00 | 000.00 | 000.00 | 00.000 | | 60,84,85 |
| 58 | USS | NPA | 1 | NV | CON | NON | BTH | FRC | 000.000 | 0000 | 0000.00 | 000.00 | 000.00 | 000.00 | 000.00 | 000.00 | 000.00 | 00.000 | X | 60,82,83 |
| 58 | USS | NIPA | 1 | V | CON | ATM | BTH | FRC | 5.200 | 0240 | 0012.000 | 014.90 | 019.60 | 045.90 | 009.80 | 024.70 | 000.00 | 3.044 | | |
| 58 | RCHD | MIL | 1 | V | SCB | ATM | CNT | FRC | 999.999 | 9999 | 9999.99 | 999.99 | 999.99 | 999.99 | 999.99 | 999.99 | 999.99 | 99.999 | | 60 |
| 59 | EX | BNJ | 1 | NV | CON | NON | CNT | FRC | 000.000 | 0000 | 0000.000 | 000.00 | 000.00 | 000.00 | 000.00 | 000.00 | 000.00 | 00.000 | | 205,206,207 |
| 60 | AP | PFL | 1 | NV | CON | BLR | CNT | FRC | 63.400 | 0449 | 0399.300 | 086.60 | 020.10 | 001.90 | 059.70 | 018.30 | 000.00 | 3.714 | X | 61,62,63 |
| 60 | CE | BITX | 1 | NV | CON | NON | CNT | FRC | 000.000 | 0000 | 0000.000 | 000.00 | 000.00 | 000.00 | 000.00 | 000.00 | 000.00 | 00.000 | | 195,196,208 |
| 60 | CE | BITX | 3 | NV | CON | RCL | CNT | FRC | 000.000 | 0000 | 0000.000 | 000.00 | 000.00 | 000.00 | 000.00 | 000.00 | 000.00 | 00.000 | | |
| 60 | NP | PFL | 1 | NV | CON | NON | CNT | FRC | 000.000 | 0000 | 0000.000 | 000.00 | 000.00 | 000.00 | 000.00 | 000.00 | 000.00 | 00.000 | | 61,62,63 |
| 60 | ALE | PLA | 1 | NV | CON | BLR | CNT | FRC | 560.000 | 1258 | 3668.000 | 097.50 | 020.80 | 000.00 | 066.70 | 012.50 | 000.00 | 7.992 | X | 64,65,66 |
| 60 | ALE | PLA | 1 | NV | CON | NON | CNT | FRC | 000.000 | 0000 | 0000.000 | 000.00 | 000.00 | 000.00 | 000.00 | 000.00 | 000.00 | 00.000 | | |
| 60 | MNS | TCTX | 2 | NV | CON | BLR | CNT | FRC | 999.999 | 9999 | 9999.999 | 999.99 | 999.99 | 999.99 | 999.99 | 999.99 | 999.99 | 99.999 | | 209,79,84,85 |
| 61 | VU | GLA | 2 | NV | CON | RCL | CNT | FRC | 000.000 | 0000 | 0000.000 | 000.00 | 000.00 | 000.00 | 000.00 | 000.00 | 000.00 | 00.000 | | 210,211,212 |
| 61 | LCP | MWV | 1 | NV | CON | RCL | CNT | FRC | 000.000 | 0000 | 0000.000 | 000.00 | 000.00 | 000.00 | 000.00 | 000.00 | 000.00 | 00.000 | | 213 |
| 62 | S | DPTX | 1 | NV | CON | FLR | CNT | FRC | 2.200 | 1183 | 0010.000 | 039.70 | 020.50 | 000.00 | 066.70 | 012.80 | 000.00 | 7.765 | X | 67,68,69 |
| 62 | S | DPTX | 1 | NV | CON | FLR | CNT | FRC | 4.900 | 2003 | 0032.680 | 068.10 | 030.00 | 005.40 | 061.60 | 003.00 | 000.00 | 9.064 | | |
| 62 | UC | IWV | 2 | NV | CON | NON | CNT | FRC | 000.000 | 0000 | 0000.000 | 000.00 | 000.00 | 000.00 | 000.00 | 000.00 | 000.00 | 00.000 | | 4,5,6 |
| 63 | HF | WNC | 1 | V | CON | RCL | CNT | FRC | 000.000 | 0000 | 0000.000 | 0000.00 | 000.00 | 000.00 | 000.00 | 000.00 | 000.00 | 00.000 | | |
| 64 | HF | WNC | 1 | V | CON | RCL | CNT | FRC | 000.000 | 0000 | 0000.000 | 000.00 | 000.00 | 000.00 | 000.00 | 000.00 | 000.00 | 00.000 | | |
| 65 | DP | MTN | 1 | NV | CON | ATM | CNT | FRC | 999.999 | 9999 | 9999.999 | 999.99 | 999.99 | 999.99 | 999.99 | 999.99 | 999.99 | 99.999 | X | 41,42,70 |
| 65 | DP | MTN | 1 | NV | CON | ATM | CNT | FRC | 999.999 | 9999 | 9999.999 | 999.99 | 999.99 | 999.99 | 999.99 | 999.99 | 999.99 | 99.999 | | |
| 65 | DP | MTN | 2 | NV | CON | ATM | CNT | FRC | 126.400 | 0155 | 0116.200 | 013.10 | 009.30 | 056.30 | 015.30 | 019.10 | 000.00 | 2.287 | | |
| 65 | DP | MTN | 2 | V | ABS | ATM | CNT | FRC | 999.999 | 9999 | 9999.999 | 999.99 | 999.99 | 999.99 | 999.99 | 999.99 | 999.99 | 99.999 | | |
| 65 | RH | DPTX | 1 | V | CON | FLR | CNT | FRC | 18.300 | 2870 | 0289.000 | 100.00 | 033.30 | 000.00 | 053.30 | 013.40 | 000.00 | 15.000 | X | 74,75,76 |
| 65 | RH | DPTX | 1 | V | CON | FLR | CNT | FRC | 2.600 | 2870 | 0041.000 | 100.00 | 033.00 | 000.00 | 053.30 | 013.40 | 000.00 | 15.000 | | |
| 65 | RH | DPTX | 1 | NV | CON | FLR | CNT | FRC | 178.500 | 1316 | 1300.000 | 097.80 | 023.00 | 000.00 | 065.00 | 011.80 | 000.00 | 8.829 | | |
| 65 | RH | DPTX | 1 | V | CON | ATM | CNT | FRC | 152.000 | 0013 | 0009.800 | 000.50 | 001.00 | 076.30 | 001.60 | 021.00 | 000.00 | 2.053 | | |
| 65 | RH | DPTX | 1 | NV | CON | ATM | CNT | FRC | 0.100 | 1056 | 0000.400 | 100.00 | 021.20 | 000.00 | 063.00 | 015.80 | 000.00 | 6.900 | | |
| 65 | CYRO | ALA | 1 | NV | CON | RCL | CNT | FLH | 000.000 | 0000 | 0000.000 | 000.00 | 000.00 | 000.00 | 00^.00 | 000.00 | 000.00 | 00.000 | X | 71,72,73 |
| 65 | CYRO | ALA | 1 | NV | CON | ATM | CNT | FRC | 7.400 | 0439 | 0012.000 | 021.90 | 016.00 | 014.30 | 054.40 | 015.30 | 000.00 | 3.522 | | |
| 65 | CYRO | ALA | 1 | NV | CON | ATM | CNT | FRC | 1.700 | 1483 | 0013.600 | 100.00 | 024.70 | 000.00 | 061.90 | 013.40 | 000.00 | 9.012 | | |
| 65 | CYRO | ALA | 1 | NV | CON | NON | CNT | FRC | 000.000 | 0000 | 0000.000 | 000.00 | 000.00 | 000.00 | 000.00 | 000.00 | 000.00 | 00.000 | | |
| 65 | CYRO | ALA | 1 | V | CON | ATM | CNT | FRC | 72.900 | 0066 | 0026.500 | 002.30 | 005.10 | 067.00 | 008.10 | 019.80 | 000.00 | 2.191 | | |
| 65 | CYRO | ALA | 1 | V | CON | ATM | CNT | FRC | 96.200 | 0295 | 0148.800 | 015.70 | 013.50 | 046.00 | 030.00 | 010.50 | 000.00 | 3.351 | | |
| 66 | USS | HOH | 2 | NV | CON | ATM | CNT | FRC | 999.999 | 9999 | 9999.999 | 999.99 | 999.99 | 999.99 | 999.99 | 999.99 | 999.99 | 99.999 | | |
| 66 | USS | HOH | 2 | NV | CON | ATM | CNT | FRC | 999.999 | 9999 | 9999.999 | 999.99 | 999.99 | 999.99 | 999.99 | 999.99 | 999.99 | 99.999 | | |
| 66 | CHEV | RCA | 1 | V | CON | INC | CNT | FRC | 999.999 | 9999 | 9999.999 | 999.99 | 999.99 | 999.99 | 999.99 | 999.99 | 999.99 | 99.999 | | |
| 67 | DB | FTX | 1 | NV | CON | NON | CNT | FRC | 999.999 | 9999 | 9999.999 | 999.99 | 999.99 | 999.99 | 999.99 | 999.99 | 999.99 | 99.999 | | 190 |
| 68 | RU | GLA | 1 | NV | SCB | ATM | CNT | FRC | 999.999 | 9999 | 9999.999 | 999.99 | 999.99 | 999.99 | 999.99 | 999.99 | 999.99 | 99.999 | | 28,29,30 |
| 68 | MDB | PPA | 1 | V | CON | ATM | CNT | FRC | 1.500 | 0352 | 0001.800 | 009.60 | 019.30 | 057.90 | 021.70 | 001.10 | 000.00 | 2.971 | X | 77 |
| 69 | BASF | GLA | 3 | NV | CON | FLR | CNT | FRC | 999.999 | 9999 | 9999.999 | 999.99 | 999.99 | 999.99 | 999.99 | 999.99 | 999.99 | 99.999 | | |
| 69 | BASF | GLA | 2 | V | CON | ATM | CNT | FRC | 999.999 | 9999 | 9999.999 | 999.99 | 999.99 | 999.99 | 999.99 | 999.99 | 999.99 | 99.999 | | |
| 70 | DS | DPTX | 1 | NV | CON | ATM | CNT | FLH | 13.600 | 0006 | 0002.100 | 000.80 | 000.40 | 000.00 | 066.10 | 032.80 | 000.70 | 3.041 | X | 78 |
| 70 | DS | DPTX | 1 | NV | CON | ATM | CNT | FRC | 1.300 | 0143 | 0003.400 | 014.60 | 000.60 | 000.40 | 077.60 | 020.60 | 000.80 | 2.920 | | |
| 70 | DS | DPTX | 2 | V | SCB | ATM | CNT | FRC | 999.999 | 9999 | 9999.999 | 999.99 | 999.99 | 999.99 | 999.99 | 999.99 | 999.99 | 99.999 | | |
| 70 | DS | DPTX | 1 | NV | CON | ATM | CNT | FRC | 999.999 | 9999 | 9999.999 | 999.99 | 999.99 | 999.99 | 999.99 | 999.99 | 999.99 | 99.999 | | |

| CH # | MFR | PLNT LOCN | NO COL | COL CND | PR EQUP | FINL CNTL | OPR MODE | DIST TYPE | FLOW SCFM | BTU/ SCF | VOC LB/HR | %VOC | %C | %N | %H | %O | %CL | ATOM NUMB | SCR NEP | REF NO |
|---|---|---|---|---|---|---|---|---|---|---|---|---|---|---|---|---|---|---|---|---|
| 70 | DS | DPTX | 1 | NV | CON | ATM | CNT | FRC | 0.200 | 9999 | 9999.999 | 999.99 | 999.99 | 999.99 | 999.99 | 999.99 | 999.99 | 99.999 | | |
| 70 | VU | GLA | 1 | NV | CON | NON | CNT | FRC | 000.000 | 0000 | 0000.000 | 000.00 | 000.00 | 000.00 | 000.00 | 000.00 | 000.00 | 00.000 | | 128,129 |
| 70 | VU | WKS | 1 | NV | CON | NON | CNT | FRC | 000.000 | 0000 | 0000.000 | 000.00 | 000.00 | 000.00 | 000.00 | 000.00 | 000.00 | 00.000 | | |
| 70 | ETH | BRLA | 3 | NV | CON | NON | CNT | FRC | 000.000 | 0000 | 0000.000 | 000.00 | 000.00 | 000.00 | 000.00 | 000.00 | 000.00 | 00.000 | | 214,215,216 |
| 70 | ETH | BRLA | 2 | V | CON | NON | CNT | FRC | 000.000 | 0000 | 0000.000 | 000.00 | 000.00 | 000.00 | 000.00 | 000.00 | 000.00 | 00.000 | | |
| 70 | ETH | BRLA | 1 | NV | CON | RCL | CNT | FRC | 000.000 | 0000 | 0000.000 | 000.00 | 000.00 | 000.00 | 000.00 | 000.00 | 000.00 | 00.000 | | |
| 70 | PPG | LCLA | 4 | NV | CON | NON | CNT | FRC | 000.000 | 0000 | 0000.000 | 000.00 | 000.00 | 000.00 | 000.00 | 000.00 | 000.00 | 00.000 | | 34,35,217 |
| 71 | MNS | ATX | 2 | NV | CON | ATM | CNT | FRC | 999.999 | 9999 | 9999.999 | 999.99 | 999.99 | 999.99 | 999.99 | 999.99 | 999.99 | 99.999 | | 84,85,218,219 |
| 71 | MNS | ATX | 1 | NV | CON | RCL | CNT | FRC | 000.000 | 0000 | 0000.000 | 000.00 | 000.00 | 000.00 | 000.00 | 000.00 | 000.00 | 00.000 | | |
| 71 | MNS | ATX | 2 | V | CON | ATM | CNT | FRC | 999.999 | 9999 | 9999.999 | 999.99 | 999.99 | 999.99 | 999.99 | 999.99 | 999.99 | 99.999 | | |
| 71 | USS | HOH | 1 | V | CON | ATM | CNT | FRC | 999.999 | 9999 | 9999.999 | 999.99 | 999.99 | 999.99 | 999.99 | 999.99 | 999.99 | 99.999 | | 103,104,219 |
| 71 | USS | HOH | 4 | NV | CON | ATM | CNT | FRC | 999.999 | 9999 | 9999.999 | 999.99 | 999.99 | 999.99 | 999.99 | 999.99 | 999.99 | 99.999 | | |
| 71 | USS | HOH | 1 | NV | CON | ATM | CNT | FLH | 999.999 | 9999 | 9999.999 | 999.99 | 999.99 | 999.99 | 999.99 | 999.99 | 999.99 | 99.999 | | |
| 71 | USS | HOH | 1 | V | CON | ATM | CNT | FRC | 999.999 | 9999 | 9999.999 | 999.99 | 999.99 | 999.99 | 999.99 | 999.99 | 999.99 | 99.999 | | |
| 71 | USS | HOH | 2 | NV | CON | ATM | CNT | FRC | 999.999 | 9999 | 9999.999 | 999.99 | 999.99 | 999.99 | 999.99 | 999.99 | 999.99 | 99.999 | | |
| 71 | CHEV | RCA | 2 | NV | CON | NON | CNT | FRC | 000.000 | 0000 | 0000.000 | 000.00 | 000.00 | 000.00 | 000.00 | 000.00 | 000.00 | 00.000 | | 138,139,219 |
| 71 | CHEV | RCA | 3 | V | CON | INC | CNT | FRC | 999.999 | 9999 | 9999.999 | 999.99 | 999.99 | 999.99 | 999.99 | 999.99 | 999.99 | 99.999 | | |
| 72 | KO | CIL | 1 | V | CON | INC | CNT | FLN | 0.500 | 3602 | 0011.500 | 100.00 | 053.30 | 000.00 | 026.70 | 020.00 | 000.00 | 2.920 | X | 79,80,81 |
| 72 | KO | CIL | 1 | V | CON | INC | CNT | FRC | 9.500 | 0690 | 0042.700 | 019.20 | 034.10 | 029.30 | 017.00 | 019.60 | 000.00 | 5.194 | | |
| 72 | KO | CIL | 1 | V | CON | INC | CNT | FRC | 13.200 | 0979 | 0084.100 | 027.20 | 039.30 | 025.70 | 019.60 | 015.40 | 000.00 | 5.894 | | |
| 72 | KO | BPA | 1 | V | CON | NON | CNT | FRC | 000.000 | 0000 | 0000.000 | 000.00 | 000.00 | 000.00 | 000.00 | 000.00 | 000.00 | 00.000 | | 79,80,81 |
| 72 | MNS | TCTX | 2 | V | CON | INC | CNT | FRC | 27.000 | 505 | 100.000 | 17.90 | 29.50 | 14.70 | 42.00 | 13.80 | 0.00 | 3.906 | X | 79,84,85 |
| 72 | STP | ELIL | 1 | V | CON | ATM | CNT | FRC | 2.400 | 260 | 4.000 | 26.70 | 19.70 | 50.00 | 9.80 | 20.50 | 0.00 | 2.939 | X | 79 |
| 72 | STP | ELIL | 1 | V | CON | ATM | CNT | FRC | 17.900 | 69 | 8.000 | 1.90 | 6.80 | 69.00 | 3.40 | 20.80 | 0.00 | 2.248 | | |
| 72 | USS | NIPA | 1 | V | CON | INC | BTN | FRC | 25.500 | 0494 | 0082.000 | 013.70 | 029.00 | 037.00 | 014.50 | 019.50 | 000.00 | 3.787 | X | 79,82,83 |
| 72 | BASF | KNJ | 2 | V | CON | INC | CNT | FRC | 999.999 | 9999 | 9999.999 | 999.99 | 999.99 | 999.99 | 999.99 | 999.99 | 999.99 | 99.999 | | 79,220,221 |
| 73 | UC | IWV | 1 | NV | CON | NON | CNT | FRC | 000.000 | 0000 | 0000.000 | 000.00 | 000.00 | 000.00 | 000.00 | 000.00 | 000.00 | 00.000 | | 4,5,6 |
| 74 | NP | MIL | 1 | NV | CON | NON | CNT | FRC | 000.000 | 0000 | 0000.000 | 000.00 | 000.00 | 000.00 | 000.00 | 000.00 | 000.00 | 00.000 | | |
| 74 | NP | MIL | 1 | NV | CON | RCL | CNT | FRC | 000.000 | 0000 | 0000.000 | 000.00 | 000.00 | 000.00 | 000.00 | 000.00 | 000.00 | 00.000 | | |
| 74 | PN | STX | 2 | NV | CON | NON | CNT | FRC | 000.000 | 0000 | 0000.000 | 000.00 | 000.00 | 000.00 | 000.00 | 000.00 | 000.00 | 00.000 | | 145,146,173 |
| 74 | BFG | CCKY | 2 | NV | CON | NON | CNT | FRC | 000.000 | 0000 | 0000.000 | 000.00 | 000.00 | 000.00 | 000.00 | 000.00 | 000.00 | 00.000 | | 174 |
| 74 | MBL | BTX | 2 | NV | CON | NON | CNT | FRC | 000.000 | 0000 | 0000.000 | 000.00 | 000.00 | 000.00 | 000.00 | 000.00 | 000.00 | 00.000 | | 175 |
| 74 | ARCO | CVTX | 2 | NV | CON | NON | CNT | FRC | 000.000 | 0000 | 0000.000 | 000.00 | 000.00 | 000.00 | 000.00 | 000.00 | 000.00 | 00.000 | | 176,177,178 |
| 75 | AM | TCTX | 1 | V | CON | RCL | CNT | FRC | 000.000 | 0000 | 0000.000 | 000.00 | 000.00 | 000.00 | 000.00 | 000.00 | 000.00 | 00.000 | | |
| 75 | AM | TCTX | 1 | V | CON | NON | CNT | FRC | 000.000 | 0000 | 0000.000 | 000.00 | 000.00 | 000.00 | 000.00 | 000.00 | 000.00 | 00.000 | | |
| 75 | AM | TCTX | 2 | V | CON | ATM | CNT | FRC | 999.999 | 9999 | 9999.999 | 999.99 | 999.99 | 999.99 | 999.99 | 999.99 | 000.00 | 99.999 | | |
| 75 | MNS | TCTX | 2 | V | CON | RCL | CNT | FRC | 000.000 | 0000 | 0000.000 | 000.00 | 000.00 | 000.00 | 000.00 | 000.00 | 000.00 | 00.000 | | 84,85,167 |
| 75 | MNS | TCTX | 3 | V | CON | RCL | CNT | FRC | 000.000 | 0000 | 0000.000 | 000.00 | 000.00 | 000.00 | 000.00 | 000.00 | 000.00 | 00.000 | | |
| 75 | SUN | CCTX | 1 | NV | CON | NON | CNT | FRC | 000.000 | 0000 | 0000.000 | 000.00 | 000.00 | 000.00 | 000.00 | 000.00 | 000.00 | 00.000 | | 132,133,168 |
| 75 | SUN | CCTX | 3 | V | CON | ATM | CNT | FRC | 999.999 | 9999 | 9999.999 | 999.99 | 999.99 | 999.99 | 999.99 | 999.99 | 999.99 | 99.999 | | |
| 75 | ELPP | ODTX | 2 | V | CON | FLR | CNT | FRC | 999.999 | 9999 | 9999.999 | 999.99 | 999.99 | 999.99 | 999.99 | 999.99 | 000.00 | 99.999 | | 169,170,171 |
| 75 | ELPP | ODTX | 2 | NV | CON | NON | CNT | FRC | 000.000 | 0000 | 0000.000 | 000.00 | 000.00 | 000.00 | 000.00 | 000.00 | 000.00 | 00.000 | | |
| 75 | GULF | STLA | 1 | V | CON | ATM | CNT | FRC | 999.999 | 9999 | 9999.999 | 999.99 | 999.99 | 999.99 | 999.99 | 999.99 | 999.99 | 99.999 | | 46,47,48 |
| 75 | GULF | SJLA | 1 | V | CON | ATM | CNT | FRC | 999.999 | 9999 | 9999.999 | 999.99 | 999.99 | 999.99 | 999.99 | 999.99 | 999.99 | 99.999 | | |
| 75 | GULF | SJLA | 1 | V | CON | ATM | CNT | FRC | 999.999 | 9999 | 9999.999 | 999.99 | 999.99 | 999.99 | 999.99 | 999.99 | 999.99 | 99.999 | | |
| 76 | AM | DAL | 1 | NV | ABS | ATM | CNT | FRC | 999.999 | 9999 | 9999.999 | 999.99 | 999.99 | 999.99 | 999.99 | 999.99 | 999.99 | 99.999 | | 222 |
| 76 | DP | CFNC | 1 | NV | CON | NON | CNT | FRC | 000.000 | 0000 | 0000.000 | 000.00 | 000.00 | 000.00 | 000.00 | 000.00 | 000.00 | 00.000 | | 40,41,42 |
| 76 | DP | OHTN | 1 | NV | CON | NON | CNT | FRC | 000.000 | 0000 | 0000.000 | 000.00 | 000.00 | 000.00 | 000.00 | 000.00 | 000.00 | 00.000 | | |
| 76 | SCE | CSC | 1 | NV | SCB | ATM | CNT | FRC | 2.500 | 0114 | 0001.900 | 006.60 | 000.00 | 000.00 | 000.00 | 000.00 | 000.00 | 00.000 | X | |
| 76 | SCE | CSC | 1 | NV | CON | ATM | CNT | FRC | 0.020 | 0169 | 0000.020 | 005.30 | 000.00 | 000.00 | 000.00 | 000.00 | 000.00 | 00.000 | | |
| 77 | RU | GLA | 3 | V | CON | ATM | CNT | FRC | 999.999 | 9999 | 9999.999 | 999.99 | 999.99 | 999.99 | 999.99 | 999.99 | 999.99 | 99.999 | | 28,29,30 |
| 77 | MOB | NMWV | 4 | V | CON | INC | CNT | FRC | 999.999 | 9999 | 9999.999 | 999.99 | 999.99 | 999.99 | 999.99 | 999.99 | 999.99 | 99.999 | | |
| 77 | BASF | GLA | 6 | V | SCB | ATM | CNT | FRC | 999.999 | 9999 | 9999.999 | 999.99 | 999.99 | 999.99 | 999.99 | 999.99 | 999.99 | 99.999 | | 223,224,225 |
| 78 | PPG | LCLA | 6 | NV | CON | NON | CNT | FRC | 000.000 | 0000 | 0000.000 | 000.00 | 000.00 | 000.00 | 000.00 | 000.00 | 000.00 | 00.000 | | 34,35,217 |
| 78 | PPG | LCLA | 1 | NV | ABS | ATM | CNT | FRC | 999.999 | 9999 | 9999.999 | 999.99 | 999.99 | 999.99 | 999.99 | 999.99 | 999.99 | 99.999 | | |
| 79 | ETN | BRLA | 1 | NV | CON | NON | CNT | FRC | 000.000 | 0000 | 0000.000 | 000.00 | 000.00 | 000.00 | 000.00 | 000.00 | 000.00 | 00.000 | | 214,215,216 |
| 79 | ETN | BRLA | 1 | NV | CON | RCL | CNT | FRC | 000.000 | 0000 | 0000.000 | 000.00 | 000.00 | 000.00 | 000.00 | 000.00 | 000.00 | 00.000 | | |
| 79 | PPG | LCLA | 5 | NV | CON | NON | CNT | FRC | 000.000 | 0000 | 0000.000 | 000.00 | 000.00 | 000.00 | 000.00 | 000.00 | 000.00 | 00.000 | | 34,35,217 |
| 80 | DP | CWNJ | 2 | NV | CON | NON | CNT | FRC | 000.000 | 0000 | 0000.000 | 000.00 | 000.00 | 000.00 | 000.00 | 000.00 | 000.00 | 00.000 | | |
| 80 | ALL | DIL | 1 | NV | CON | RCL | CNT | FRC | 000.000 | 0000 | 0000.000 | 000.00 | 000.00 | 000.00 | 000.00 | 000.00 | 000.00 | 00.000 | | |

| CH # | MFR | PLNT LOCH | NO COL | COL CHD | FR EQUP | FINL CNTL | OPR MODE | DIST TYPE | FLOW SCFM | BTU/ SCF | VOC LB/HR | %VOC | %C | %H | %H | %O | %CL | ATOM NUMB | SCR MEP | REF NO |
|---|---|---|---|---|---|---|---|---|---|---|---|---|---|---|---|---|---|---|---|---|
| 81 | CE | BCTX | 2 | NV | CON | RCL | CNT | FRC | 000.000 | 0000 | 0000.000 | 000.00 | 000.00 | 000.00 | 000.00 | 000.00 | 000.00 | 00.000 | | 226,227,228,229 |
| 81 | CE | BCTX | 2 | NV | CON | NON | CNT | FRC | 000.000 | 0000 | 0000.000 | 000.00 | 000.00 | 000.00 | 000.00 | 000.00 | 000.00 | 00.000 | | |
| 81 | CE | BCTX | 1 | V | CON | RCL | CNT | FRC | 000.000 | 0000 | 0000.000 | 000.00 | 000.00 | 000.00 | 000.00 | 000.00 | 000.00 | 00.000 | | |
| 81 | DP | HTX | 2 | NV | CON | RCL | CNT | FRC | 000.000 | 0000 | 0000.000 | 000.00 | 000.00 | 000.00 | 000.00 | 000.00 | 000.00 | 00.000 | X | 89,90,91 |
| 81 | DP | HTX | 1 | NV | CON | RCL | CNT | FLH | 000.000 | 0000 | 0000.000 | 000.00 | 000.00 | 000.00 | 000.00 | 000.00 | 000.00 | 00.000 | | |
| 81 | DP | HTX | 1 | NV | CON | FLR | CNT | FRC | 10.500 | 74 | 15.200 | 8.30 | 4.50 | 8.90 | 86.60 | 0.0 | 0.00 | 2.196 | | |
| 81 | DP | HTX | 1 | NV | CON | FLR | CNT | FRC | 2.300 | 781 | 5.200 | 52.00 | 25.50 | 51.00 | 23.50 | 0.0 | 0.00 | 4.084 | | |
| 81 | DP | HTX | 1 | NV | CON | FLR | CNT | FRC | 9.000 | 1308 | 34.800 | 87.00 | 31.70 | 63.50 | 4.80 | 0.0 | 0.00 | 5.479 | | |
| 81 | DP | HTX | 1 | NV | CON | FLR | CNT | FRC | 15.000 | 149 | 6.600 | 9.90 | 8.30 | 16.50 | 75.20 | 0.0 | 0.00 | 2.396 | | |
| 81 | USI | DPTX | 3 | NV | CON | FLR | CNT | FRC | 999.999 | 9999 | 9999.999 | 999.99 | 999.99 | 999.99 | 999.99 | 999.99 | 999.99 | 99.999 | | 230,231,232 |
| 81 | USI | DPTX | 2 | NV | CON | RCL | CNT | FRC | 000.000 | 0000 | 0000.000 | 000.00 | 000.00 | 000.00 | 000.00 | 000.00 | 000.00 | 00.000 | | |
| 82 | CO | LCLA | 2 | NV | CON | RCL | CNT | FRC | 000.000 | 0000 | 0000.000 | 000.00 | 000.00 | 000.00 | 000.00 | 000.00 | 000.00 | 00.000 | | 233 |
| 82 | CO | LCLA | 1 | NV | CON | NON | CNT | FRC | 000.000 | 0000 | 0000.000 | 000.00 | 000.00 | 000.00 | 000.00 | 000.00 | 000.00 | 00.000 | | |
| 82 | ETH | BRLA | 5 | NV | CON | NON | CNT | FRC | 000.000 | 0000 | 0000.000 | 000.00 | 000.00 | 000.00 | 000.00 | 000.00 | 000.00 | 00.000 | | 214,215,216,233 |
| 82 | ETH | BRLA | 1 | NV | CON | RCL | CNT | FRC | 000.000 | 0000 | 0000.000 | 000.00 | 000.00 | 000.00 | 000.00 | 000.00 | 000.00 | 00.000 | | |
| 82 | PPG | LCLA | 3 | NV | CON | RCL | CNT | FRC | 000.000 | 0000 | 0000.000 | 000.00 | 000.00 | 000.00 | 000.00 | 000.00 | 000.00 | 00.000 | | 34,35,217,233 |
| 82 | PPG | LCLA | 1 | NV | CON | INC | CNT | FRC | 999.999 | 9999 | 9999.999 | 999.99 | 999.99 | 999.99 | 999.99 | 999.99 | 999.99 | 99.999 | | |
| 84 | DP | VTX | 6 | NV | SCB | ATM | CNT | FRC | 65.000 | 6 | 19.000 | 13.00 | 1.30 | 90.00 | 2.90 | 5.60 | 0.20 | 2.075 | X | |
| 84 | DP | VTX | 2 | NV | SCB | BLR | CNT | FLR | 0.100 | 834 | 0.250 | 27.50 | 31.20 | 41.30 | 0.0 | 0.0 | 0.00 | 4.451 | | |
| 85 | DP | VTX | 7 | V | CON | INC | CNT | FRC | 36.701 | 123 | 15.498 | 3.40 | 8.80 | 82.40 | 8.80 | 0.0 | 0.00 | 2.342 | | |
| 85 | DP | VTX | 4 | NV | CON | INC | CNT | FRC | 16.700 | 1464 | 0.100 | 40.80 | 40.30 | 19.50 | 40.30 | 0.0 | 0.00 | 6.079 | X | |
| 86 | DP | VTX | 1 | NV | SCB | ATM | CNT | FLH | 80.000 | 9 | 19.600 | 5.10 | 33.50 | 2.20 | 1.60 | 62.70 | 0.00 | 3.021 | X | |
| 86 | DP | VTX | 1 | NV | CON | ATM | CNT | FLH | 3.300 | 90 | 28.800 | 72.50 | 33.30 | 33.30 | 33.40 | 0.0 | 0.00 | 4.488 | | |
| 87 | DP | OTX | 7 | NV | CON | ATM | CNT | FRC | 999.999 | 9999 | 9999.999 | 999.99 | 999.99 | 999.99 | 999.99 | 999.99 | 999.99 | 99.999 | | |
| 888 | UCC | STX | 5 | NV | CON | RCL | CNT | FLH | 000.000 | 0000 | 0000.000 | 000.00 | 000.00 | 000.00 | 000.00 | 000.00 | 000.00 | 00.000 | | |
| 888 | UCC | STX | 6 | NV | CON | RCL | CNT | FRC | 000.000 | 0000 | 0000.000 | 000.00 | 000.00 | 000.00 | 000.00 | 000.00 | 000.00 | 00.000 | | |
| 888 | UCC | STX | 3 | V | CON | ATM | CNT | FRC | 999.999 | 9999 | 9999.999 | 999.99 | 999.99 | 999.99 | 999.99 | 999.99 | 999.99 | 99.999 | | |
| 888 | EXON | BRLA | 2 | V | CON | NON | CNT | FRC | 000.000 | 0000 | 0000.000 | 000.00 | 000.00 | 000.00 | 000.00 | 000.00 | 000.00 | 00.000 | | |
| 888 | EXON | BRLA | 6 | NV | CON | FLR | CNT | FRC | 999.999 | 9999 | 9999.999 | 999.99 | 999.99 | 999.99 | 999.99 | 999.99 | 999.99 | 99.999 | | |
| 888 | EXON | BRLA | 4 | NV | CON | RCL | CNT | FLH | 000.000 | 0000 | 0000.000 | 000.00 | 000.00 | 000.00 | 000.00 | 000.00 | 000.00 | 00.000 | | |
| 888 | EXON | BRLA | 2 | NV | CON | FLR | CNT | FLH | 999.999 | 9999 | 9999.999 | 999.99 | 999.99 | 999.99 | 999.99 | 999.99 | 999.99 | 99.999 | | |
| 888 | EXON | BRLA | 5 | V | CON | ATM | CNT | FRC | 999.999 | 9999 | 9999.999 | 999.99 | 999.99 | 999.99 | 999.99 | 999.99 | 999.99 | 99.999 | | |
| 888 | TXEM | LTX | 1 | NV | CON | RCL | CNT | FLH | 000.000 | 0000 | 0000.000 | 000.00 | 000.00 | 000.00 | 000.00 | 000.00 | 000.00 | 00.000 | | |
| 888 | TXEM | LTX | 7 | V | CON | ATM | CNT | FRC | 999.999 | 9999 | 9999.999 | 999.99 | 999.99 | 999.99 | 999.99 | 999.99 | 999.99 | 99.999 | | |
| 888 | TXEM | LTX | 10 | NV | CON | RCL | CNT | FRC | 000.000 | 0000 | 0000.000 | 000.00 | 000.00 | 000.00 | 000.00 | 000.00 | 000.00 | 00.000 | | |
| 888 | TXEM | LTX | 23 | NV | CON | NON | CNT | FRC | 000.000 | 0000 | 0000.000 | 000.00 | 000.00 | 000.00 | 000.00 | 000.00 | 000.00 | 00.000 | | |
| 888 | TXEM | LTX | 19 | NV | CON | RCL | CNT | FRC | 000.000 | 0000 | 0000.000 | 000.00 | 000.00 | 000.00 | 000.00 | 000.00 | 000.00 | 00.000 | | |
| 999 | A | NS | 1 | CO | CON | ATM | CNT | FRC | 999.999 | 9999 | 3.900 | 999.99 | 999.99 | 999.99 | 999.99 | 999.99 | 999.99 | 99.999 | | |
| 999 | A | NS | 1 | CO | CON | ATM | CNT | FRC | 999.999 | 9999 | 5.200 | 999.99 | 999.99 | 999.99 | 999.99 | 999.99 | 999.99 | 99.999 | | |
| 999 | A | NS | 19 | CO | CON | RCL | CNT | FRC | 000.000 | 0000 | 0000.000 | 000.00 | 000.00 | 000.00 | 000.00 | 000.00 | 000.00 | 00.000 | | |
| 999 | A | YS | 15 | CO | CON | RCL | CNT | FRC | 000.000 | 0000 | 0000.000 | 000.00 | 000.00 | 000.00 | 000.00 | 000.00 | 000.00 | 00.000 | | |
| 999 | A | YS | 5 | CO | CON | INC | CNT | FRC | 999.999 | 9999 | 9999.999 | 999.99 | 999.99 | 999.99 | 999.99 | 999.99 | 999.99 | 99.999 | | |
| 999 | A | YS | | CO | CON | INC | CNT | FRC | 999.999 | 9999 | 9999.999 | 999.99 | 999.99 | 999.99 | 999 99 | 999.99 | 999.99 | 99.999 | | |
| 999 | A | NS | 1 | CO | CON | ATM | CNT | FRC | 999.999 | 9999 | 5.200 | 999.99 | 999.99 | 999.99 | 999.99 | 999.99 | 999.99 | 99.999 | | |
| 999 | A | NS | 1 | CO | CON | ATM | CNT | FRC | 999.999 | 9999 | 0.900 | 999.99 | 999.99 | 999.99 | 999.99 | 999.99 | 999.99 | 99.999 | | |
| 999 | A | NS | 2 | CO | CON | ATM | CNT | FRC | 999.999 | 9999 | 2.300 | 999.99 | 999.99 | 999.99 | 999.99 | 999.99 | 999.99 | 99.999 | | |
| 999 | A | NS | 3 | CO | CON | ATM | CNT | FRC | 999.999 | 9999 | 9999.999 | 999.99 | 999.99 | 999.99 | 999.99 | 999.99 | 999.99 | 99.999 | | |
| 999 | A | YS | 9 | CO | CON | ATM | CNT | FRC | 999.999 | 9999 | 9999.999 | 999.99 | 999.99 | 999.99 | 999.99 | 999.99 | 999.99 | 99.999 | | |
| 999 | A | YS | 10 | CO | CON | ATM | CNT | FRC | 000.000 | 0000 | 0000.000 | 000.00 | 000.00 | 000.00 | 000.00 | 000.00 | 000.00 | 00.000 | | |
| 999 | A | NS | 1 | CO | CON | ATM | CNT | FRC | 999.999 | 9999 | 9999.999 | 999.99 | 999.99 | 999.99 | 999.99 | 999.99 | 999.99 | 99.999 | | |
| 999 | A | NS | 1 | CO | CON | ATM | CNT | FRC | 999.999 | 9999 | 9999.999 | 999.99 | 999.99 | 999.99 | 999.99 | 999.99 | 999.99 | 99.999 | | |
| 999 | A | NS | 1 | CO | CON | ATM | CNT | FRC | 999.999 | 9999 | 2.080 | 8.30 | 999.99 | 999.99 | 999.99 | 999.99 | 999.99 | 99.999 | | |
| 999 | A | NS | 1 | CO | CON | ATM | CNT | FRC | 999.999 | 9999 | 0.420 | 999.99 | 999.99 | 999.99 | 999.99 | 999.99 | 999.99 | 99.999 | | |
| 999 | A | NS | 1 | CO | CON | ATM | CNT | FRC | 999.999 | 9999 | 0.420 | 999.99 | 999.99 | 999.99 | 999.99 | 999.99 | 999.99 | 99.999 | | |
| 999 | A | YS | 2 | CO | CON | ATM | CNT | FRC | 999.999 | 9999 | 9999.999 | 999.99 | 999.99 | 999.99 | 999.99 | 999.99 | 999.99 | 99.999 | | |
| 999 | A | NS | 1 | CO | CON | ATM | CNT | FRC | 999.999 | 9999 | 0.001 | 999.99 | 999.99 | 999.99 | 999.99 | 999.99 | 999.99 | 99.999 | | |
| 999 | A | NS | 4 | CO | SCB | ATM | CNT | FRC | 000.000 | 0000 | 0000.000 | 000.00 | 000.00 | 000.00 | 000.00 | 000.00 | 000.00 | 00.000 | | |
| 999 | A | NS | 2 | CO | CON | ATM | CNT | FRC | 999.999 | 9999 | 9999.999 | 999.99 | 999.99 | 999.99 | 999.99 | 999.99 | 999.99 | 99.999 | | |
| 999 | A | NS | 1 | CO | CON | ATM | CNT | FRC | 999.999 | 9999 | 9999.999 | 999.99 | 999.99 | 999.99 | 999.99 | 999.99 | 999.99 | 99.999 | | |
| 999 | A | NS | 1 | CO | CON | ATM | CNT | FRC | 999.999 | 9999 | 9999.999 | 999.99 | 999.99 | 999.99 | 999.99 | 999.99 | 999.99 | 99.999 | | |

| | | | | | | | | | | | | | | | | | | |
|---|---|---|---|---|---|---|---|---|---|---|---|---|---|---|---|---|---|---|
| 999 | A | NS | 1 | CO | CON | ATM | CNT | FRC | 999.999 | 9999 | 9999.999 | 999.99 | 999.99 | 999.99 | 999.99 | 999.99 | 999.99 | 99.999 |
| 999 | A | NS | 1 | CO | CON | ATM | CNT | FRC | 999.999 | 9999 | 4.300 | 999.99 | 999.99 | 999.99 | 999.99 | 999.99 | 999.99 | 99.999 |
| 999 | A | NS | 1 | CO | CON | ATM | CNT | FRC | 999.999 | 9999 | 0.700 | 999.99 | 999.99 | 999.99 | 999.99 | 999.99 | 999.99 | 99.999 |
| 999 | A | NS | 1 | CO | CON | ATM | CNT | FRC | 999.999 | 9999 | 0.100 | 999.99 | 999.99 | 999.99 | 999.99 | 999.99 | 999.99 | 99.999 |
| 999 | A | NS | 1 | CO | CON | ATM | CNT | FRC | 999.999 | 9999 | 0.001 | 999.99 | 999.99 | 999.99 | 999.99 | 999.99 | 999.99 | 99.999 |
| 999 | A | NS | 1 | CO | CON | ATM | CNT | FRC | 999.999 | 9999 | 0.420 | 999.99 | 999.99 | 999.99 | 999.99 | 999.99 | 999.99 | 99.999 |
| 999 | A | NS | 4 | CO | CON | ATM | CNT | FRC | 999.999 | 9999 | 8.300 | 999.99 | 999.99 | 999.99 | 999.99 | 999.99 | 999.99 | 99.999 |
| 999 | A | NS | 1 | CO | CON | ATM | CNT | FRC | 999.999 | 9999 | 9999.999 | 999.99 | 999.99 | 999.99 | 999.99 | 999.99 | 999.99 | 99.999 |
| 999 | A | NS | 1 | CO | CON | ATM | CNT | FRC | 999.999 | 9999 | 9999.999 | 999.99 | 999.99 | 999.99 | 999.99 | 999.99 | 999.99 | 99.999 |
| 999 | A | NS | 1 | CO | CON | ATM | CNT | FRC | 999.999 | 9999 | 1.000 | 999.99 | 999.99 | 999.99 | 999.99 | 999.99 | 999.99 | 99.999 |
| 999 | A | NS | 1 | CO | CON | ATM | CNT | FRC | 999.999 | 9999 | 0.500 | 999.99 | 999.99 | 999.99 | 999.99 | 999.99 | 999.99 | 99.999 |
| 999 | A | NS | 1 | CO | CON | ATM | CNT | FRC | 999.999 | 9999 | 0.100 | 999.99 | 999.99 | 999.99 | 999.99 | 999.99 | 999.99 | 99.999 |
| 999 | A | NS | 1 | CO | CON | ATM | CNT | FRC | 999.999 | 9999 | 13.500 | 999.99 | 999.99 | 999.99 | 999.99 | 999.99 | 999.99 | 99.999 |
| 999 | A | NS | 1 | CO | CON | ATM | CNT | FRC | 999.999 | 9999 | 9999.999 | 999.99 | 999.99 | 999.99 | 999.99 | 999.99 | 999.99 | 99.999 |
| 999 | A | YS | 8 | CO | CON | RCL | CNT | FRC | 000.000 | 0000 | 0000.000 | 000.00 | 000.00 | 000.00 | 000.00 | 000.00 | 000.00 | 00.000 |
| 999 | A | YS | 1 | CO | CON | INC | CNT | FRC | 999.999 | 9999 | 9999.999 | 999.99 | 999.99 | 999.99 | 999.99 | 999.99 | 999.99 | 99.999 |
| 999 | A | YS | 2 | CO | CON | INC | CNT | FRC | 999.999 | 9999 | 9999.999 | 999.99 | 999.99 | 999.99 | 999.99 | 999.99 | 999.99 | 99.999 |
| 999 | A | YS | 2 | CO | CON | INC | CNT | FRC | 999.999 | 9999 | 9999.999 | 999.99 | 999.99 | 999.99 | 999.99 | 999.99 | 999.99 | 99.999 |
| 999 | A | YS | 1 | CO | CON | INC | CNT | FRC | 999.999 | 9999 | 9999.999 | 999.99 | 999.99 | 999.99 | 999.99 | 999.99 | 999.99 | 99.999 |
| 999 | A | NS | 1 | CO | CON | ATM | CNT | FRC | 0.260 | 1375 | 1.830 | 100.00 | 22.00 | 0.0 | 67.00 | 11.00 | 0.00 | 9.000 |
| 999 | A | YS | 1 | CO | CON | ATM | CNT | FRC | 0.020 | 0 | 0.0 | 0.00 | 0.0 | 99.00 | 0.0 | 0.0 | 0.00 | 2.002 |
| 999 | A | YS | 4 | CO | SCB | ATM | CNT | FRC | 49.600 | 0 | 0.560 | 0.00 | 0.10 | 99.50 | 0.30 | 0.0 | 0.00 | 2.008 |
| 999 | A | YS | 1 | CO | CON | ATM | CNT | FRC | 77.320 | 6 | 1.360 | 0.20 | 0.40 | 78.10 | 0.80 | 20.80 | 0.00 | 1.984 |
| 999 | A | NS | 3 | CO | CON | ATM | CNT | FRC | 40.590 | 0 | 0.090 | 0.00 | 0.0 | 79.00 | 0.0 | 21.00 | 0.00 | 2.000 |

YYYYYYYY

| | |
|---|---|
| CHEMNO 1 | ACETALDEHYDE |
| CHEMNO 2 | ACETIC ACID |
| CHEMNO 3 | ACETIC ANHYDRIDE |
| CHEMNO 4 | ACETONE |
| CHEMNO 5 | ACETONE CYANOHYDRIN |
| CHEMNO 6 | ACETONITRILE |
| CHEMNO 7 | ACETOPHENONE |
| CHEMNO 8 | ACROLEIN |
| CHEMNO 9 | ACRYLIC ACID |
| CHEMNO 10 | ACRYLIC ESTERS |
| CHEMNO 11 | ACRYLONITRILE |
| CHEMNO 12 | ADIPIC ACID |
| CHEMNO 13 | ADIPONITRILE |
| CHEMNO 14 | ALKYL BENZENE |
| CHEMNO 15 | ALLYL ALCOHOL |
| CHEMNO 17 | ALLYL CHLORIDE |
| CHEMNO 18 | ANILINE |
| CHEMNO 19 | BUTADIENE |
| CHEMNO 20 | 1-BUTENE |
| CHEMNO 21 | CAPROLACTUM |
| CHEMNO 22 | CARBON DISULFIDE |
| CHEMNO 23 | CARBON TETRACHLORIDE |
| CHEMNO 24 | CHLOROBENZENE |
| CHEMNO 25 | CHLORODIFLUOROMETHANE |
| CHEMNO 26 | CHLOROPRENE |
| CHEMNO 27 | CUMENE |
| CHEMNO 28 | CUMENE HYDROPEROXIDE |
| CHEMNO 29 | CYCLOHEXANE |
| CHEMNO 30 | CYCLOHEXANONE/CYCLOHEXANOL |
| CHEMNO 31 | DICHLOROBENZENE |
| CHEMNO 32 | DICHLORODIFLUOROMETHANE |
| CHEMNO 33 | DIMETHYL TEREPHTHALATE |
| CHEMNO 34 | DINITROTOLUENE |
| CHEMNO 35 | DIPHENYLAMIONE |

CHEMNO 35 DIPHENYLAMIONE
CHEMNO 36 EPICHLOROHYDRIN
CHEMNO 37 ETHANOL
CHEMNO 38 ETHANOLAMINES
CHEMNO 39 ETHYL ACRYLATE
CHEMNO 40 ETHYLACETATE
CHEMNO 41 ETHYLBENZENE
CHEMNO 42 ETHYLENE
CHEMNO 43 ETHYLDICHLORIDE
CHEMNO 44 ETHYLKENE GLYCOL
CHEMNO 45 ETHYLENE OXIDE
CHEMNO 46 ETHYL HEXANOL
CHEMNO 47 FORMALDEHYDE
CHEMNO 48 FORMIC ACID
CHEMNO 49 GLYCIDOL
CHEMNO 50 GLYCERIN
CHEMNO 51 HEXAMETHYLENE DIAMINE
CHEMNO 52 HYDROGEN CYANIMIDE
CHEMNO 53 ISOBUTANOL
CHEMNO 54 ISOBUTRALDEHYDE
CHEMNO 55 ISODECANOL
CHEMNO 56 ISOOCTANOL
CHEMNO 57 ISOPHTHALIC ACID
CHEMNO 58 MALEIC ANHYDRIDE
CHEMNO 59 MESITYL OXIDE
CHEMNO 60 METHANOL
CHEMNO 61 METHYL CHLORIDE
CHEMNO 62 METHYL ETHYL-KETONE
CHEMNO 63 METHYL BENZOATE
CHEMNO 64 METHYL TOLUATE
CHEMNO 65 METHYL METHACRYLATE
CHEMNO 66 -METHYL STYRENE
CHEMNO 67 N- BUTANOL
CHEMNO 68 NITROBENZENE
CHEMNO 69 -TOLUENE DIAMINE
CHEMNO 70 PERCHLOROETHYLENE
CHEMNO 71 PHENOL
CHEMNO 72 PHTHALIC ANHYDRIDE
CHEMNO 73 PROPIONIC ACID
CHEMNO 74 PROPYLENE
CHEMNO 75 STYRENE
CHEMNO 76 TEREPHTHALIC ACID
CHEMNO 77 TOLUENE DIISOCYANATE
CHEMNO 78 TRICHLOROEHANE
CHEMNO 79 TRICHLOROETHYLENE
CHEMNO 80 TRICHLOROFLUOROMETHANE
CHEMNO 81 VINYL ACETATE
CHEMNO 82 VINYLCHLORIDE
CHEMNO 83 DODECYLBENZENE

EOF:

## Reference List For Appendix C


1. Letter from Farmer, J., EPA, to Tower, R., Celanese, August 13, 1980.
2. Letter from Tower, R., Celanese, to Farmer, J., EPA, October 3, 1980.
3. Letter from Edwards, J., Tennessee Eastman, to Patrick, D., EPA, May 15, 1978.
4. Letter from Desai, T., EEA, to Bess, F. D., UCC, July 16, 1980.
5. Letter from Bess, F. D., UCC, to Desai, T., EEA, August 6, 1980.
6. Emission Control Options for the Synthetic Organic Chemical Manufacturing Industry. Trip Report - Union Carbide Technical Center. EPA Contract No. 68-02-2577, December 1977.
7. EPA 1972 Houdry Questionnaires - Acetic Anhydride.
8. Letter from Desai, T., EEA, to Thomas, D., Tennessee Eastman, July 22, 1980.
9. Letter from Edwards, J., Tennessee Eastman, to Babcock, J., EEA, March 27, 1981.
10. Letter from Farmer, J. R., EPA, to Mullins, J. A., Shell, August 21, 1980.
11. Letter from Mullins, J. A., Shell, to Farmer, J. R., EPA, October 15, 1980.
12. Letter from Mullins, J. A., Shell, to Goodwin, D. R., EPA, October 25, 1978.
13. Letter from Patrick, D. R., EPA, to Edwards, J., Tennessee Eastman, October 20, 1978.
14. Letter from Bess, F., UCC, to Patrick, D., EPA, September 21, 1978.
15. Letter from Farmer, J. R., EPA, to Bess, F. D., UCC, August 30, 1980.
16. Letter from Bess, F. D., UCC, to Farmer, J. R., EPA, September 30, 1980.
17. Letter from Johnson, L. D., Rohm and Haas, to Miles, A. J., EEA, March 21, 1980.
18. Letter from Farmer, J. R., EPA, to Venable, J. R., Rohm and Haas, August 21, 1980.
19. Letter from Venable, J. R., Rohm and Haas, to Farmer, J. R., EPA October 14, 1980.
20. Letter from Ray, R., Dow Badische, to Goodwin, D. R., EPA, May 12, 1978.
21. Letter from Desai, T., EEA, to Ray, R., Badische Corporation, July 16, 1980.
22. Letter from Ray, R., Badische Corporation, to Desai, T., EEA, August 7, 1980.

23. Emission Control Options for the Synthetic Organic Chemical Manufacturing Industry. Trip Report - Union Carbide Acrylic Acid and Esters Plant. EPA Contract No. 68-02-2577. June 1978.

24. EPA 1972 Houdry Questionnaires - Acrylonitrile.

25. Letter from Desai, T., EEA, to Volke, E. J., American Cyanamid, September 18, 1980.

26. Letter from Volke, E. J., American Cyanamid, to Desai, T., EEA, September 29, 1980.

27. Letter from Lorine, D. J., Conoco, to Goodwin, D. R., EPA, February 17, 1978.

28. Emission Control Options for the Synthetic Organic Chemical Manufacturing Industry. Trip Report - Rubicon Nitrobenzene Plant. EPA Contract No. 68-02-2577. July 19, 1977.

29. Letter from Desai, T., EEA, to Anthon, W.L., Rubicon, July 18, 1980.

30. Letter from Anthon, W. L., Rubicon, to Babcock, J. C., EEA, March 20, 1981.

31. Letter from Smith, A. G., Shell, to Goodwin, D. R., EPA, February 22, 1978.

32. Letter from Wurzer, H. J., Montrose, to Goodwin, D. R., EPA, March 7, 1978.

33. Letter from Dilmore, C. R., PPG, to Weber, R. C., EPA, September 30, 1977.

34. Letter from Farmer, J. R., EPA, to Dehn, Dr. F. C., PPG, October 20, 1980.

35. Letter from Samelson, R. J., PPG, to Farmer, J. R., EPA, November 14, 1980.

36. Letter from Meyer, A. J., Denka, to Goodwin, D. R., EPA, March 26, 1979.

37. Letter from Farmer, J. R., EPA, to Meyer, A. J., Denka, October 14, 1980.

38. Letter from Meyer, A. J., Denka, to Farmer, J. R., EPA, October 21, 1980.

39. EPA 1972 Houdry Questionnaires - Cyclohexanone/Cyclohexanol.

40. Letter from Smith, D. W., DuPont, to Goodwin, D. R., EPA, October 20, 1978.

41. Letter from Farmer, J. R., EPA, to Steele, J. L., DuPont, August 13, 1980.

42. Letter from Steele, J. L., DuPont, to Farmer, J. R., EPA, December 12, 1980.

43. Letter from Edwards, J. C., Tennessee Eastman, to Goodwin, D. R., EPA, August 31, 1978.

44. Letter from Anziano, L. B., Olin, to Goodwin, D. R., EPA, May 17, 1978.

45. Desai, T., Memo to SOCMI Distillation File, September 12, 1980,

46. Letter from Berry, F. E., Gulf, to Mascone, D., EPA, July 20, 1979.

47. Letter from Desai, T., EEA, to Berry, F. E., Gulf, August, 19, 1980.

48. Letter from Berry, F. E., Gulf, to Desai, T., September 3, 1980.

49. Letter from Desai, T., EEA, to De Bernardi, J. A., Conoco, October 20, 1980.

50. Letter from De Bernardi, J. A., Conoco, to Desai, T., EEA, November 4, 1980.

51. Letter from De Bernardi, J. A., Conoco, to Goodwin, D. R., EPA, May 26, 1978.

52. EPA 1972 Houdry Questionnaires - Ethylene Dichloride.

53. Letter from Mullins, J. A., Shell, to Goodwin, D. R., EPA, January, 11, 1979.

54. EPA 1972 Houdry Questionnaires - Formaldehyde.

55. Letter from Smith, D. W., DuPont, to Goodwin, D. R., EPA, December 15, 1978.

56. Letter from Senyk, D., EEA, to Steele, J. L., DuPont, April 23, 1981.

57. Letter from Steele, J. L., DuPont, to Farmer, J. R., EPA, December 12, 1980.

58. Letter from Brennan, H. M., Amoco, to Mascone, D., EPA, July 28, 1978.

59. Emission Control Options for the Synthetic Organic Chemical Manufacturing Industry. Trip Report - Amoco Maleic Anhydride Plant. EPA Contract No. 68-02-2577. January 1978.

60. EPA 1972 Houdry Questionnaires - Maleic Andride.

61. Letter from Duggan, R. L., Air Products, to Goodwin, D. R., EPA, May 11, 1978.

62. Letter from Farmer, J. R., EPA, to Sroufe, R. H., Air Products, August 13, 1980.

63. Letter from Sroufe, R. H., Air Products, to Farmer, J. R., EPA, September 30, 1980.

64. Letter from Brenner, D. M., Hercofina, to Goodwin, D. R., EPA, April 12, 1978.

65. Letter from Farmer, J. R., EPA, to Hoffmann, G. R., Hercofina, September 25, 1981.

66. Letter from Hoffmann, G. R., Hercofina, January 7, 1981, to Farmer, J. R., EPA, January 7, 1981.

67. Letter from Mullins, J. A., Shell, to Goodwin, D. R., EPA, June 22, 1978.

68. Letter from Mullins, J. A., Shell, to Farmer, J. R., EPA, December 2, 1980.

69. Letter from Farmer, J. R., EPA, to Mullins, J. A., Shell, November 6, 1980.

70. Emission Control Options for the Synthetic Organic Chemical Manufacturing Industry. Trip Report - DuPont Methyl Methacrylate Plant. EPA Contract No. 68-02-2577. June 1978.

71. Letter from Gold, D. H., CYRO, to White, R., Hydroscience, May 4, 1978.

72. Letter from Desai, T., EEA, to Volke, E. J., CYRO, September 18, 1980.

73. Letter from Volke, E. J., CYRO, to Desai, T., EEA, September 29, 1980.

74. Letter from Johnson, L. D., Rohm and Haas, to Miles, A. J., EEA, March 21, 1980.

75. Letter from Farmer, J. R., EPA, to Venable, J. R., Rohm and Haas, August 21, 1980.

76. Letter from Venable, J. R., Rohm and Haas, to Farmer, J. R., EPA, October 14, 1980.

77. Letter from Hughes, L. P., Mobay, to Goodwin, D. R., EPA, January 31, 1978.

78. Letter from Worthington, J. B., Diamond Shamrock, to Goodwin, D. R., EPA, January 16, 1979.

79. EPA 1972 Houdry Questionnaires - Phthalic Anhydride.

80. Letter from Senyk, D., EEA, to Urbassik, M., Koppers, October 1, 1980.

81. Letter from Urbassik, M., Koppers, to Senyk, D., EEA, October 21, 1980.

82. Letter from Desai, T., EEA, to Moniot, J. D., U. S. Steel, October 2, 1980.

83. Letter from Moniot, J. D., U. S. Steel, to Desai, T., EEA, October 21, 1980.

84. Letter from Farmer, J. R., EPA, to Weishaar, M. F., Monsanto, November 6, 1980.

85. Letter from Weishaar, M. F., Monsanto, to Farmer, J. R., EPA, May 21, 1981.

86. Letter from Bess, F. D., Union Carbide, to Evans, L. B., EPA, May 5, 1978.

87. Letter from Foster, R. L., UC, to Farmer J. R., EPA, December 18, 1980.

88. Letter from Farmer, J. R., EPA, to Foster, R. L. UC, November 6, 1980.

89. Letter from Smith, D. W., DuPont, to Goodwin, D. R., EPA, September 18, 1980.

90. Letter from Farmer, J. R., EPA, to Kafka, M. C., DuPont, November 4, 1980.

91. Letter from Kafka, M. C., DuPont, to Farmer, J. R., EPA, December 8, 1980.

92. Letter from Smith, H. A., DuPont, to Goodwin, D. R., EPA, November 28, 1978.

93. Letter from Farmer, J. R., EPA, to Steele, DuPont, December 12, 1980.

94. Letter from Steele, J. L., DuPont, to Farmer, J. R., EPA, March 4, 1981.

95. Letter from Prendergast, G., Texas Eastman, to Goodwin, D. R., EPA, January 26, 1979.

96. Letter from Farmer, J. R., EPA, to Prendergast, G., Texas Eastman, August 21, 1980.

97. Letter from Prendergast, G., Texas Eastman, to Farmer, J. R., EPA, January 27, 1981.

98. Emissions Control Options for the Synthetic Organic Chemical Manufacturing Industry. Trip Report - Monsanto Acetic Acid Plant. EPA Contract No. 68-02-2577. December 1977.

99. EPA 1972 Houdry Questionnaires - Acetic Acid.

100. EPA 1972 Houdry Questionnaires - Acetone.

101. Letter from Farmer, J. R., EPA, to Reiter, W., Allied, October 20, 1980.

102. Letter from Alcorta, J. D., Allied, to Farmer, J. R., EPA, December 29, 1980.

103. Letter from Desai, T., EEA, to Demski, S. J., USS, October 6, 1980.

104. Letter from Demski, S. J., USS, to Desai, T., EEA, November 6, 1980.

105. Letter from Goodwin, D. R., EPA, to Rhodes, T. H., Exxon, August 16, 1978.

106. Letter from Rhodes, T. H., Exxon, to Goodwin, D. R., EPA, October 13, 1978.

107. Limpiti, A., Memo to SOCMI Distillation File, April 18, 1980.

108. Letter from Bess, F. D., UCC, to Evans, L. B., EPA, April 21, 1978.

109. Emission Control Options for the Synthetic Organic Chemical Manufacturing Industry - DuPont Acrylonitrile Plant. EPA Contract No. 68-02-2577. September 1977.

110. Emission Control Options for the Synthetic Organic Chemical Manufacturing Industry - Vistron Acrylonitrile Plant. EPA Contract No. 68-02-2577. October 1977.

111. Letter from Smith, D. W., DuPont, to Goodwin, D. R., April 20, 1978.

112. EPA 1972 Houdry Questionnaires - Adipic Acid.

113. Letter from Vistica, E. A., Witco, to Goodwin, D. R., EPA, February 6, 1978.

114. Letter from Derway, D., EEA, to Corinth, J., Witco, August 26, 1980.

115. Letter from Corinth, J., Witco, to Derway, D., EEA, September 15, 1980.

116. Emission Control Options for the Synthetic Organic Chemical Manufacturing Industry. Trip Report - Monsanto Alkyl Benzene Plant. EPA Contract No. 68-02-2577. November 1977.

117. Letter from Craddock, J. H., UCC, to Patrick, D., EPA, May 31, 1979.

118. Emission Control Options for the Synthetic Organic Chemical Manufacturing Industry. Trip Report - FMC Glycerine Plant. EPA Contract No. 68-02-2577.

119. Letter from Farmer, J. R., EPA, to Hopkins, C. B., FMC, September 16, 1980.

120. Letter from Hopkins, C. B., FMC, to Farmer, J. R., EPA, October 20, 1980.

121. EPA 1972 Houdry Questionnaires - Allyl Chloride.

122. Emission Control Options for the Synthetic Organic Chemical Manufacturing Industry. Trip Report - Petro-Tex Butadiene Plant. EPA Contract No. 68-02-2577. October 1977.

123. Letter from Desai, T., EEA, to Towe, R., Petro-Tex, August 19, 1980.

124. Letter from Stewart, L. A., Petro-Tex, to Desai, T., September 10, 1980.

125. EPA 1972 Houdry Questionnaires - Ethylene.

126. Letter from Mullins, P. B., Mobil, to Goodwin, D. R., EPA, January 26, 1978.

127. Letter from Robinson, T. A., Vulcan, to Patrick, D. R., EPA, July 9, 1979.

128. Letter from Desai, T., EEA, to Renner, J., Vulcan, July 25, 1980.

129. Letter from Renner, J., Vulcan, to Desai, T., August 26, 1980.

130. Letter from Wurzer, H. J., Montrose, to Goodwin, D. R., EPA, March 7, 1978.

131. Letter from Kampfhenkel, J. R., Sun, to Goodwin, D. R., EPA, September 12, 1978.

132. Letter from Desai, T., EEA, to Myers, G., Sun, August 27, 1980.

133. Letter from Myers, G., Sun, to Desai, T., EEA, February 20, 1981.

134. Letter from Zanotti, M. P., Gulf, to Goodwin, D. R., EPA, September 19, 1978.

135. Letter from Desai, T., EEA, to Wilson, G., Gulf, August 22, 1980.

136. Letter from Wilson, G., Gulf, to Desai, T., EEA, September 4, 1980.

137. EPA 1972 Houdry Questionnaires - Cumene Hydroperoxide.

138. Letter from Babcock, J., EEA, to Davis, R. W., Chevron, March 11, 1981.

139. Letter from Davis, R. W., Chevron, to Babcock, J., EEA, April 13, 1981.

140. Letter from Chaffin, R. L., Champlin, to Goodwin, D. R., EPA, January 25, 1978.

141. Letter from Pardue, K., Cosden, to Goodwin, D. R., EPA, January 24, 1978.

142. Letter from Farmer, J. R., EPA, to Nairn, T. M., Cosden, August 11, 1980.

143. Letter from Nairn, T. M., Cosden, to Farmer, J. R., EPA, September 29, 1980.

144. Emission Control Options for the Synthetic Organic Chemical Manufacturing Industry. Trip Report - Phillips Cyclohexane Plant. September 1977.

145. Letter from Desai, T., EEA, to Ballard, B. F., Phillips, October 16, 1980.

146. Letter from Ballard, B. F., Phillips, to Desai, T., EEA, October 29, 1980.

147. Letter from Dickinson, W. W., Sun, to Goodwin, D. R., EPA, January 26, 1978.

148. Emission Control Options for the Synthetic Organic Chemical Manufacturing Industry. Trip Report. EPA Contract 68-02-2577. September 1977.

149. Letter from Farmer, J. R., EPA, to Cox, J. B., Exxon, September 11, 1980.

150. Letter from Cox, J. B., Exxon, to Farmer, J. R., EPA, October 6, 1980.

151. Letter from Zanotti, M. P., Gulf, to Goodwin, D. R., EPA, January 26, 1978.

152. Letter from Desai, T., EEA, to Wilson, G. J., Gulf, November 20, 1980.

153. Letter from Wilson, G. J., Gulf, to Desai, T., EEA, December 10, 1980.

154. Emission Control Options for the Synthetic Organic Chemical Manufacturing Industry. Trip Report - Nipro Cyclohexanol Plant. April 1978.

155. EPA 1972 Houdry Questionnaires - Cyclohexanol.

156. Letter from Bess, F. D., UC, to Evans, L. B., EPA, May 5, 1978.

157. Emission Control Options for the Synthetic Organic Chemical Manufacturing Industry. Trip Report - Monsanto Cycloheranol Plant. February 1978.

158. Letter from Smith, D. W., DuPont, to Goodwin, D. R., EPA, August 21, 1978.

159. Letter from Farmer, J. R., EPA, to Steele, J. L., DuPont, December 12, 1980.

160. Letter from Steele, J. L., DuPont, to Farmer, J. R., EPA, March 4, 1981.

161. Letter from Schrader, W. C., Allied, to Mascone, D. C., EPA, January 31, 1978.

162. Letter from Desai, T., EEA, to Lanter, N. A., Allied, July 25, 1980.

163. Letter from Lanter, N. A., Allied, to Babcock, J. C., EEA, March 19, 1981.

164. EPA 1972 Houdry Questionnaires - Glycerine.

165. Letter from Edwards, J. C., Tennessee Eastman, to Goodwin, D. R., EPA, August 11, 1978.

166. Letter from Bufkin, L. T., American Hoechst, to Goodwin, D. R., EPA, January 26, 1978.

167. Letter from Keating, H. M., Monsanto, to Evans, L., EPA, April 28, 1978.

168. Letter from Kampfhenkel, J. R., Sun, to Goodwin, D. R., EPA, November 7, 1978.

169. Letter from Kuykendall, C. R., El Paso, to Goodwin, D. R., EPA, January 31, 1978.

170. Letter from Senyk, D., EEA, to Chapman, L., El Paso, October 7, 1980.

171. Letter from Smith, R. H., El Paso, to Senyk, D., EEA, December 3, 1980.

172. Letter from Smith, D. W., DuPont, to Goodwin, D. R., EPA, February 3, 1978.

173. Letter from McReynolds, L. A., Phillips, to Goodwin, D. R., EPA, January 27, 1978.

174. Letter from Kaminski, K. J., B. F. Goodrich, to Goodwin, D. R., EPA, November 15, 1978.

175. Letter from Mullin, P. B., Mobil, to Goodwin, D. R., EPA, January 26, 1978.

176. EPA 1972 Houdry Questionnaires - Ethylene.

177. Letter from Mullin, M. L., ARCO, to Desai, T., EEA, September 22, 1980.

178. Letter from Desai, T., EEA, to Mullin, M. L., ARCO, August 27, 1980.

179. Letter from Gordon, V., Vulcan, to Evans, L., EPA, October 24, 1978.

180. Letter from Farmer, J. R., EPA, to Cornell, P. B., ICI, November 6, 1980.

181. Letter from Cornell, P. B., ICI, to Farmer, J. R., EPA, November 26, 1980.

182. Letter from Samelson, R. J., PPG, to Goodwin, D. R., EPA, June 2, 1978.

183. Limpiti, O., Memo to SOCMI Distillation Files, April 28, 1980.

184. Letter fom Kovacevich, T. R., BASF, to Goodwin, D. R., EPA, November 27, 1978.

185. Letter from Desai, T., EEA, to Caldwell, N. F., BASF, August 27, 1980.

186. Letter from Caldwell, N. F., BASF, to Desai, T., EEA, September 22, 1980.

187. Letter from Abelson, P. M., Calcasiev, to Goodwin, D. R., EPA, December 20, 1978.

188. EPA 1972 Houdry Questionnaires - Ethylene Oxide.

189. Emission Control Options for the Synthetic Organic Chemical Manufacturing Industry. Trip Report - BASF Ethylene Oxide Plant. July 1977.

190. EPA 1972 Houdry Questionnaires - 2 Ethyl hexanol.

191. Emission Control Options for the Synthetic Organic Chemical Manufacturing Industry. Trip Report - Borden Formaldehyde Plant. August 1977.

192. Letter from Pandullo, R., EEA, to Moreau, J., Borden, August 7, 1980.

193. Letter from Moreau, J., Borden, to Pandullo, R., EEA, August 12, 1980.

194. Emission Control Options for the Synthetic Organic Chemical Manufacturing Industry. Trip Report - Celanese Formaldehyde Plant.

195. Letter from Babcock, J., EEA, to Carpenter, B., Celanese, March 11, 1981.

196. Letter from Carpenter, B., Celanese, to Babcock, J., March 1981.

197. Letter from Senyk, D., EEA, to Wood, L. F., Hooker, September 24, 1980.

198. Letter from Wood, L. F., Hooker, to Senyk, D., EEA, October 14, 1980.

199. Limpiti, O., Memo to SOCMI Distillation Files, April 17, 1980.

200. Letter from Hopkins, C. B., FMC, to Goodwin, D. R., EPA, February 6, 1979.

201. Letter from Farmer, J., EPA, to Hopkins, C., FMC, September 16, 1980.

202. Letter from Hopkins, C., FMC, to Farmer, J., EPA, October 20, 1980.

203. EPA 1972 Houdry Questionnaires - n-Butanol

204. Emission Control Techniques for the Synthetic Organic Chemical Manufacturing Industry. Trip Report - Monsanto Maleic Anhydride Plant. EPA Contract No. 68-02-2577. October 1977.

205. Letter from Ball, C., Exxon, to Goodwin, D. R., EPA, October 13, 1978.

206. Letter from Desai, T., EEA, to Schirripa, R., Exxon, August 19, 1980.

207. Letter from Schirripa, R., Exxon, to Desai, T., EEA, August 28, 1980.

208. Emission Control Techniques for the Synthetic Organic Chemical Manufacturing Industry. Trip Report - Celanese Methanol Plant. EPA Contract No. 68-02-2577. October 1977.

209. Emission Control Techniques for the Synthetic Organic Chemical Manufacturing Industry. Trip Report - Monsanto Methanol Plant. EPA Contract No. 68-02-2577. December 1977.

210. Letter from Robinson, T., Vulcan, to Patrick, D., EPA, July 9, 1979.

211. Letter from Senyk, D., EEA, to Robinson, T., Vulcan, September 22, 1980.

212. Letter from Robinson, T., Vulcan, to Senyk, D., EEA, October 1, 1980.

213. Letter from Muthig, J., Allied, to Goodwin, D., EPA, March 31, 1978.

214. Letter from Strader, W., Ethyl, to Goodwin, D., EPA, November 28, 1978.

215. Letter from Senyk, D., EEA, to Park, D., Ethyl, October 15, 1980.

216. Letter from Park, D., Ethyl, to Senyk, D., EEA, November 10, 1980.

217. Letter from Dehn, F., PPG, to Goodwin, D., EPA, March 14, 1979.

218. Emission Control Options for the Synthetic Organic Chemical Manufacturing Industry. Trip Report - Monsanto Phenol Plant. EPA Contract No. 68-02-2577. July 1977.

219. EPA 1972 Houdry Questionnaires - Phenol.

220. Letter from Babcock, J., EEA, to Neumann, G., BASF, October 23, 1980.

221. Letter from Neumann, G., BASF, to Babcock, J., EEA, March 30, 1981.

222. Emission Control Options for the Synthetic Organic Chemical Manufacturing Industry. Trip Report - Amoco Terephthalic Acid Plant. EPA Contract No. 68-02-2577. October 1977.

223. Letter from Kovacevich, T., BASF, to Goodwin, D., EPA, May 31, 1978.

224. Letter from Senyk, D., EEA, to Caldwell, N., BASF, September 1980.

225. Letter from Caldwell, N., BASF, to Senyk, D., EEA, October 13, 1980.

226. Emission Control Options for the Synthetic Organic Chemical Manufacturing Industry. Trip Report. EPA Contract No. 68-02-2577. September 1977.

227. EPA 1972 Houdry Questionnaires - Vinyl Acetate.

228. Letter from Schaefer, C., Celanese, to Farmer, J., EPA, November 20, 1980.

229. Letter from Farmer, J., EPA, to Schaefer, C., Celanese, November 6, 1980.

230. Letter from Carpenter, K. G., USI, to Goodwin, D., EPA, August 17, 1978.

231. Letter from Farmer, J., EPA, to Carpenter, K., USI, November 6, 1980.

232. Letter from Carpenter, K., USI, to Farmer, J., EPA, November 20, 1980.

233. EPA 1972 Houdry Questionnaires - Vinyl Chloride.

# APPENDIX D
# EMISSION MEASUREMENT

# APPENDIX D - EMISSION MEASUREMENT

## D.1 INTRODUCTION

The proposed distillation operations new source performance (NSPS) divides distillation facilities into two groups. One group of facilities is required under the proposed standard to reduce VOC emissions by combusting them in one of the following control devices: an incinerator, a boiler, or a flare. If emissions are combusted in an incinerator, emissions must be reduced by 98 weight percent or to 20 ppm (total volume concentration, by compound), whichever is less stringent. Standard measurement methods should be used to determine the VOC reduction. The second group of facilities is not required to reduce VOC emissions under the proposed standard. As discussed in Chapter 8 and Appendix G, the two groups of facilities are distinguished by a cutoff level of total resource effectiveness (TRE). An index value of TRE can be associated with each distillation vent stream for which the offgas characteristics of flowrate and individual VOC emission concentrations are known. The proposed standard would require that measurements be made to determine whether a source has a TRE index value above or below the cutoff level. In this case, measurements are needed to determine the flowrate and individual VOC emission concentrations. The net heating value of the distillation vent stream is then calculated.

The purpose of this appendix is to discuss and present measurement methods acceptable for determination of VOC reduction efficiency and/or individual VOC emission concentrations.

D.1.1 VOC MEASUREMENT

Numerous methods exist for the measurement of organic emissions. Among these methods are continuous flame ionization analyzers (FIA) and gas chromatograph (GC) (EPA Reference Methods 25 and 18). Each method has advantages and disadvantages. Of the two procedures, GC has the distinct advantage of identifying and quantifying the individual compounds. However, GC systems are expensive; and determination of the column required and analysis of samples can be time consuming.

The FIA technique is the simplest procedure. However, the FIA responds differently to various organic compounds and can yield highly biased results depending upon the compounds involved. Another disadvantage of the FIA is that a separate methane measurement is required to determine nonmethane organics. Of course, the direct FIA procedure does not identify or quantify individual compounds.

Method 25 sampling and analysis provides a single nonmethane organic measurement on a carbon basis; this is convenient for establishing control device efficiencies on a consistent basis. However, Method 25 does not provide any qualitative or quantitative information on individual compounds present. For these determinations, Method 18 must be used.

D.1.2 EMISSION MEASUREMENT TESTS

No emission measurement tests were performed during data gathering for this proposed standard. All emission data were collected directly from existing industry emission records.

D.2 PERFORMANCE TESTS METHODS

EPA Methods 18 and 25 are the recommended test procedures for determining control device efficiencies for distillation operations.

However, Method 25 is likely to yield slightly lower calculated efficiencies than actually obtained. Method 25 can be expected to yield higher results than the Method 18 at the emission outlet when the outlet concentration is less than 100 ppm volume; therefore, at this time, Method 25 is particularly not recommended for performance tests to measure compliance with the 98 percent reduction provision of the proposed standard when the outlet emissions are expected to be below 100 ppm. EPA Methods 1, 1A, 2, 2A, and 2C are recommended for determination of stack flowrates. Additions are being proposed to Method 2A to increase flexibility in the measurement of low flows.

In order to determine the stream net heating value for distillation sources, both identification and quantification of the substances being emitted are necessary. Method 18 can be used to: (1) determine individual VOC emissions from the control device outlet, (2) determine individual VOC reduction efficiency of the control device, and (3) provide data required to determine whether a source has a TRE index value above or below the cutoff level specified in the proposed standard.

The costs associated with performing a control device efficiency test, a total outlet VOC concentration test, or a test to gather data to compute a TRE value will vary widely, depending on the resources available; but are estimated to be $10,000 to $15,000 per test.

# APPENDIX E
# LIST OF CHEMICALS COVERED BY THE STANDARD

# APPENDIX E: LIST OF CHEMICALS COVERED BY THE STANDARD

The Agency initiated a standards development program for distillation operations based on results from I.T. Enviroscience's four year engineering study of a segment of the synthetic organic chemical manufacturing industry. Enviroscience studied in-depth the production of high volume chemical intermediates thought to contribute a large fraction to total VOC emissions from organic chemical manufacturers. Thus, one of the first tasks in the standards development program was to define exactly which chemicals would be covered.

At first, it was decided to use a list of about 380 chemicals comprising Radian Corporation's Organic Chemical Producers Data Base, 1976 (EPA Contract No. 68-02-1319, Task 51), which was composed for EPA's Industrial Environmental Research Laboratory in Cincinnati. This list was generated from "chemical trees" and from addition of certain chemicals whose national production was estimated to be over 10 million pounds per year. However, upon closer examination of the list and with the assistance of the U.S. International Trade Commission, it was discovered that there were numerous low volume chemicals on the list as well as a few that apparently were no longer made in the U.S. It was desirable to eliminate the lower volume (and of course those not made in the U.S.) chemicals for two reasons. First the lower volume chemicals usually have relatively high molecular weights and boiling points and, therefore, are increasingly likely to be involved in separations by crystallization and filtration rather than distillation. It was concluded that this would make their distillation emission contribution relatively small. Second, the emission data base represented high volume chemicals, consistent with original objectives, and not low volume chemicals. Including the low volume chemicals without adequate representation in the data base would have compromised the credibility of the regulatory analysis.

In light of these considerations, a minimum national production of 45 Gg/yr ($\sim$100 million pounds/yr) was established as the basis for constructing a new list of chemicals to be covered by this program. The

Agency has concluded that covering chemicals at or above this cutoff will still address the bulk of VOC emissions from distillation operations while comfortably working within the data base boundaries of representation. Furthermore, non-photochemically reactive VOC that do not produce photochemically reactive VOC as coproducts were eliminated from the list after assuming the production volume cutoff. The resulting list of 218 chemicals consists of high volume synthetic organic chemicals to which NSPS for distillation operations may apply.

LIST OF CHEMICALS AFFECTED BY DISTILLATION NSPS

| Chemical | Common Names |
|---|---|
| Acetaldehyde | - |
| Acetic acid | - |
| Acetic acid, anhydride | (1) Acetic anhydride<br>(2) Acetic oxide |
| Acetic acid, butyl ester | n-Butyl acetate |
| Acetic acid, ethenyl ester | Vinyl acetate |
| Acetic acid, ethyl ester | Ethyl acetate |
| Acetic acid, magnesium salt | Magnesium acetate |
| Alcohols, C-11 or lower, mixtures | - |
| Alcohols, C-12 or higher, mixtures | - |
| 2-Aminoethanol | (1) Ethanolamine |
| Benzenamine | (1) Aniline<br>(2) Phenylamine |
| Benzene | Benzol |
| 1,3-Benzenedicarboxylic acid | Isophthalic acid |
| 1,4-Benzenedicarboxylic acid | Terephthalic acid |
| 1,2-Benzenedicarboxylic acid, bis (2-ethylhexyl) ester | (1) Bis (2-ethylhexyl) phthalate<br>(2) Dioctyl phthlate<br>(3) Di (2-ethyl hexyl) phthalate |
| 1,2-Benzenedicarboxylic acid butyl, phenylmethyl ester | Butylbenzyl phthalate |
| 1,2-Benzenedicarboxylic acid di-n-heptyl-n-nonyl undecyl ester | Di-n-heptyl-n-nonyl undecyl phthalate |
| 1,2-Benzenedicarboxylic acid diisodecyl ester | Di-isodecyl phthalate |
| 1,2-Benzenedicarboxylic acid diisononyl ester | Diisononyl phthalate |
| 1,4-Benzenedicarboxylic acid, dimethyl ester | (1) Terephthalic acid, dimethyl ester<br>(2) Dimethylterephthalate<br>(3) DMT |
| Benzenesulfonic acid | - |
| Benzenesulfonic acid, mono-$C_{10-16}$-alkyl derivatives, sodium salts | - |
| Benzoic acid, tech. | - |

LIST OF CHEMICALS AFFECTED BY DISTILLATION NSPS (CONTINUED)

| Chemical | Common Names |
|---|---|
| 1,1-Biphenyl | Diphenyl |
| 2,2-Bis (hydroxymethyl)-1,3-propanediol | Pentaerythritol |
| 1,3-Butadiene | (1) Bivinyl<br>(2) Divinyl |
| Butadiene and butene fractions | - |
| Butanal | Butyraldehyde |
| Butane | n-Butane |
| Butanes, mixed | - |
| 1,2 (and 1,3) Butanediol | Butylene glycol |
| 1,4-Butanediol | - |
| Butanoic acid, anhydride | Butyric anhydride |
| 1-Butanol | n-Butyl alcohol |
| 2-Butanol | sec-Butyl alcohol |
| 2-Butanone | Methyl ethyl ketone |
| 2-Butenal | Crotonaldehyde<br>β-Methylacrolein |
| 1-Butene | α-Butylene |
| 2-Butene | (1) β-Butylene<br>(2) pseudo-Butylene |
| Butenes, mixed | Butylenes (mixed) |
| 2-Butenoic acid | Crotonic acid |
| 2-Butoxyethanol | Butyl Cellosolve$^{R}$ |
| 2-Butyne-1,4-diol | - |
| Carbamic acid, monoammonium salt | - |
| Carbon disulfide | - |
| Carbonic dichloride | Phosgene |
| Chlorobenzene | - |
| 2-Chloro-1,3-butadiene | Chloroprene |
| Chloroethane | Ethyl chloride |
| Chloroethene | Vinyl chloride |

LIST OF CHEMICALS AFFECTED BY DISTILLATION NSPS (CONTINUED)

| Chemical | Common Names |
|---|---|
| 6-Chloro-N-ethyl-N'-(1-methylethyl)-1,3,5-triazine-2,4-diamine | (1) 2-Chloro-4-(ethylamino)-6-(isopropylamino)-s-triazine<br>(2) Atrazine[R] |
| Chloromethane | Methyl chloride |
| (Chloromethyl) benzene | (1) Benzyl chloride<br>(2) α-Chlorotoluene |
| (Chloromethyl) oxirane | Epichlorohydrin |
| 1-Chloro-4-nitrobenzene | (1) p-Chloronitrobenzene<br>(2) p-Nitrochlorobenzene |
| 2-Chloro-1-propanol | (1) 2-Chloropropyl alcohol<br>(2) Propylene chlorohydrin |
| 3-Chloro-1-propene | (1) 3-Chloropropene<br>(2) Allyl chloride |
| Coconut oil acids, sodium salt | - |
| Cyclohexane | Hexahydrobenzene |
| Cyclohexane, oxidized | - |
| Cyclohexanol | (1) Hexalin<br>(2) Hexahydrophenol |
| Cyclohexanone | Pimelic ketone |
| Cyclohexanone oxime | - |
| Cyclohexene | 1,2,3,4-Tetrahydrobenzene |
| 1,3-Cyclopentadiene | - |
| Cyclopropane | Trimethylene |
| 1,2-Dibromoethane | (1) Ethylene dibromide<br>(2) Ethylene bromide |
| Dibutanized aromatic concentrate | - |
| 1,4-Dichloro-2-butene | 1,4-Dichlorobutene |
| 3,4-Dichloro-1-butene | - |
| Dichlorodifluoromethane | Freon 12 |
| Dichlorodimethylsilane | Dimethyldichlorosilane |
| 1,2-Dichloroethane | (1) Ethylene chloride<br>(2) Ethylene dichloride |
| 1,1-Dichloroethene | Vinylidene chloride |
| Dichlorofluoromethane | Freon 21 |

LIST OF CHEMICALS AFFECTED BY DISTILLATION NSPS (CONTINUED)

| Chemical | Common Names |
|---|---|
| Dichloromethane | Methylene chloride |
| 1,3-Dichloro-2-propanol | α-Dichlorohydrin |
| Diethylbenzene | - |
| 1,3-Diisocyanato-2-(and 4-) methylbenzene (80/20 mixture) | Toluene-2,4-(and 2,6)-diisocyanate (80/20 mixture) |
| Dimethylbenzenes (mixed) | Xylenes (mixed) |
| 1,2-Dimethylbenzene | o-Xylene |
| 1,3-Dimethylbenzene | m-Xylene |
| 1,4-Dimethylbenzene | p-Xylene |
| 1,1-Dimethylethyl hydroperoxide | tert-Butyl hydroperoxide |
| 2,6-Dimethylphenol | (1) m-Xylenol<br>(2) 2,6 Xylenol |
| 1-Dodecene | (1) Dodecene<br>(2) Tetrapropylene |
| Dodecylbenzene, linear | Alkylbenzene |
| Dodecylbenzene, non linear | - |
| Dodecylbenzenesulfonic acid | - |
| Dodecylbenzenesulfonic acid, sodium salt | - |
| 1,2-Ethanediol | Ethylene glycol |
| 2,2'-(1,2-Ethanediylbis (oxy)) bisethanol | Triethylene glycol |
| Ethanol | Ethyl alcohol |
| Ethene | (1) Ethylene<br>(2) Elayl<br>(3) Olefiant gas |
| Ethenone | Ketene |
| Ethenylbenzene | Styrene |
| 2-Ethoxyethanol | (1) Ethylene glycol monoethyl ether<br>(2) Cellosolve |
| 2-Ethoxyethyl acetate | (1) Ethylene glycol monoethyl ether acetate<br>(2) Cellosolve acetate$^{R}$ |

LIST OF CHEMICALS AFFECTED BY DISTILLATION NSPS (CONTINUED)

| Chemical | Common Names |
|---|---|
| Ethylbenzene | - |
| 2-Ethylhexanal | - |
| 2-Ethyl-1-hexanol | 2-Ethylhexyl alcohol |
| (2-Ethylhexyl) amine | - |
| Ethylmethylbenzene | - |
| 6-Ethyl-1,2,3,4-tetrahydro-9,10-anthracenedione | - |
| Ethyne | (1) Acetylene<br>(2) Ethine |
| Fatty acids, tall oil, sodium salt | - |
| Formaldehyde | (1) Formalin (solution)<br>(2) Methanal (gas) |
| 2,5-Furandione | Maleic anhydride |
| D-Glucitol | Sorbitol |
| Heptane | n-Heptane |
| Heptenes (mixed) | - |
| Hexadecyl chloride | - |
| Hexahydro-2H-azepin-2-one | Caprolactam |
| Hexane | - |
| 1,6-Hexanediamine | Hexamethylene diamine |
| 1,6-Hexanediamine adipate | (1) Hexamethylene diamine adipate<br>(2) Nylon salt |
| Hexanedinitrile | (1) Adiponitrile<br>(2) 1,4-Dicyanobutane |
| Hexanedioic acid | Adipic acid |
| 2-Hexenedinitrile | 1,4-Dicyano-1-butene |
| 3-Hexenedinitrile | (1) 1,4-Dicyanobutene<br>(2) Dihydromuconononitrile<br>(3) 1,4-Dicyano-2-butene |
| Hydrocyanic acid | Hydrogen cyanide |
| 3-Hydroxybutyraldehyde | Aldol<br>Acetaldol |
| 4-Hydroxy-4-methyl-2-pentanone | Diacetone alcohol |

LIST OF CHEMICALS AFFECTED BY DISTILLATION NSPS (CONTINUED)

| Chemical | Common Names |
|---|---|
| 2-Hydroxy-2-methylpropanenitrile | (1) Acetone cyanohydrin<br>(2) 2-Methyllactonitrile |
| 2-Hydroxy-1,2,3-propanetricarboxylic acid | Citric acid |
| 2,2'-Iminobisethanol | (1) Diethanolamine<br>(2) 2,2'-Aminodiethanol |
| Iodomethane | Methyl Iodide |
| 1,3-Isobenzofurandione | Phthalic anhydride |
| Isodecanol | Isodecyl alcohol |
| Linear alcohols, ethoxylated, mixed | - |
| Linear alcohols, ethoxylated and sulfated, sodium salt, mixed | - |
| Linear alcohols, sulfated, sodium salt, mixed | - |
| Methanamine | Methylamine |
| Methanol | (1) Methyl alcohol<br>(2) Wood alcohol |
| 2-Methoxyethanol | (1) Ethylene glycol monomethyl ether<br>(2) Methyl Cellosolve$^{R}$ |
| Methylbenzene | Toluene |
| 4-Methyl-1,3-benzenediamine | (1) Toluene-2,4-diamine<br>(2) 2,4-Diaminotoluene<br>(3) 2,4-Tolylenediamine |
| ar-Methylbenzenediamine | - |
| 2-Methyl-1,3-butadiene | Isoprene |
| 2-Methylbutane | Isopentane |
| 2-Methyl-2-butene | Amylene |
| 2-Methylbutenes, mixed | Amylenes, mixed |
| Methyl tert-butyl ether | MTRE |
| 1-Methyl-2,4-dinitrobenzene (and 2-Methyl-1,3-dinitrobenzene) | 2,4(and 2,6)-dinitrotoluene |
| 1-Methyl-2,4-dinitrobenzene | 2,4-Dinitrotoluene |
| (1-Methylethyl) benzene | Cumene |

LIST OF CHEMICALS AFFECTED BY DISTILLATION NSPS (*CONTINUED*)

| Chemical | Common Names |
|---|---|
| 4,4'-(1-Methylethylidene) bisphenol | (1) 4,4'-Isopropylidenediphenol<br>(2) Bisphenol A |
| 6-Methyl-heptanol | (1) Isooctyl alcohol<br>(2) Isooctanol |
| N-Methylmethanamine | (1) Dimethylamine |
| Methyloxirane | Propylene oxide |
| 2-Methylpentane | - |
| 4-Methyl-2-pentanone | (1) Isopropyl acetone<br>(2) Methyl Isobutyl ketone |
| 4-Methyl-3-penten-2-one | - |
| 1-Methyl-1-phenylethyl hydroperoxide | Cumene hydroperoxide |
| 2-Methylpropanal | (1) Isobutyraldehyde<br>(2) Isobutylaldehyde |
| 2-Methylpropane | Isobutane |
| 2-Methyl-1-propanol | Isobutyl alcohol |
| 2-Methyl-2-propanol | (1) tert-Butyl alcohol<br>(2) t-Butanol |
| 2-Methyl-1-propene | (1) Isobutylene<br>(2) 2-Methylpropene |
| 2-Methyl-2-propenenitrile | Methacrylonitrile |
| 2-Methyl-2-propenoic acid, methyl ester | (1) Methacrylic acid methyl ester<br>(2) Methyl methacrylate |
| 1-Methyl-2-pyrrolidinone | 1-Methyl-2-pyrrolidone |
| Naphthalene | (1) Naphthene<br>(2) Naphthalin |
| 2,2',2"-Nitrilotrisethanol | (1) Triethanolamine<br>(2) Triethylolamine |
| Nitrobenzene | Nitrobenzol |
| 1-Nonanol | (1) n-Nonanol<br>(2) Nonyl alcohol |
| 1-Nonene | Tripropylene |
| Nonylphenol | - |
| Nonylphenol, ethoxylated | - |

LIST OF CHEMICALS AFFECTED BY DISTILLATION NSPS (CONTINUED)

| Chemical | Common Names |
|---|---|
| Octene | - |
| Oil-soluble petroleum sulfonate, calcium salt | - |
| Oil-soluble petroleum sulfonate, sodium salt | - |
| Oxirane | Ethylene oxide |
| 2,2'-Oxybisethanol | Diethylene glycol |
| Pentane | n-Pentane |
| 3-Penetenenitrile | - |
| Pentenes, mixed | - |
| Phenol | (1) Carbolic acid<br>(2) Hydroxybenzene |
| 1-Phenylethyl hydroperoxide | - |
| Propanal | Propionaldehyde |
| Propane | Dimethyl methane |
| 1,2-Propanediol | Propylene glycol |
| Propanenitrile | (1) Propionitrile<br>(2) Ethyl cyanide |
| 1,2,3-Propanetriol | (1) Glycerol<br>(2) Glyceryl<br>(3) Glycerin |
| Propanoic acid | Propionic acid |
| 1-Propanol | Propyl alcohol |
| 2-Propanol | Isopropyl alcohol |
| 2-Propanone | (1) Acetone<br>(2) Dimethyl ketone |
| 1-Propene | Propylene |
| 2-Propenenitrile | Acrylonitrile |
| 2-Propenoic acid | Acrylic acid |
| 2-Propenoic acid, butyl ester | Butyl acrylate |
| 2-Propenoic acid, ethyl ester | Ethyl acrylate |
| Propylbenzene | Phenylpropane |
| Sodium cyanide | Cyanogran |

LIST OF CHEMICALS AFFECTED BY DISTILLATION NSPS (CONTINUED)

| Chemical | Common Names |
|---|---|
| Tallow acids, potassium salt | - |
| Tallow acids, sodium salt | - |
| 1,3,5,7-Tetraazatricyclo (3.3.1.13.7)-decane | (1) Hexamine<br>(2) Hexamethylene tetraamine |
| Tetrabromomethane | Carbontetrabromide |
| 1,1,2,2-Tetrachloroethane | - |
| Tetrachloroethene | (1) Tetrachloroethylene<br>(2) Perchloroethylene |
| Tetrachloromethane | Carbon tetrachloride |
| Tetraethylplumbane | Tetraethyl lead |
| Tetrahydrofuran | THF |
| Tetra (methyl-ethyl) plumbane | Tetra (methyl-ethyl) lead |
| Tetramethylplumbane | Tetramethyl lead |
| 1,3,5-Triazine-2,4,6-triamine | (1) Melamine<br>(2) 2,4,6-Triamino-s-triazine |
| Tribromomethane | Bromoform |
| 1,1,1-Tribromo-2-methyl-2-propanol | (1) Tribromo-t-butyl alcohol<br>(2) Acetone-bromoform<br>(3) Brometone |
| 1,1,1-Trichloroethane | Methyl chloroform |
| 1,1,2-Trichloroethane | Vinyl trichloride |
| Trichloroethene | Trichloroethylene |
| Trichlorofluoromethane | (1) Freon 11<br>(2) Fluorotrichloromethane |
| Trichloromethane | Chloroform |
| 2,4,6-Trichloro-1,3,5-triazine | (1) Cyanuric chloride<br>(2) 2,4,6-Trichloro-s-triazine |
| 1,1,2-Trichloro-1,2,2-trifluoroethane | (1) Trichlorotrifluoroethane<br>(2) Fluorocarbon 113 |
| 2,6,6-Trimethylbicyclo (3.1.1) hept-2-ene | α-Pinene |
| Urea | (1) Carbamide<br>(2) Carbonyldiamide |
| Urea ammonium nitrate | - |

# APPENDIX F
# COSTING ALGORITHMS

# APPENDIX F
# DESIGN AND COSTING ALGORITHMS

The purpose of this appendix is to present the calculative steps describing the control device design and costing algorithms used in the regulatory analysis and to provide the basis for the assumptions used. The algorithms presented in the appendix were used to estimate the costs associated with controlling distillation vent streams in the National Emission Profile using combustion devices (flares, boilers, and incinerators). These costs were used to evaluate the impacts of various regulatory possibilities. The cost algorithms for the three separate control systems evaluated in the regulatory analysis are presented in the following sections.

The design procedures for boilers and incinerator/scrubber systems involve the development of heat and material balances for the various subsystems associated with each control device. For instance, the boiler design involves determination of boiler applicability primarily through heat transfer considerations. It is impractical to present the entire, detailed calculative procedures in this reference. The programs used in computing designs and costs for these control systems are presented in the "Distillation Operations Regulatory Analysis Program Guide" which explains the purpose and use of the computer analysis routines.[1]

## F.1 FLARE ALGORITHMS

The algorithms used in designing flare systems were taken from vendor design algorithms presented in the IT Enviroscience study of the Organic Chemical Manufacturing Industry.[2] The capital costs for new flares were based on cost curves presented in that study and adjusted from 1979 dollars to 1978 dollars. No capital costs were assumed for existing flare systems. The same costing algorithms were used for annualized costs for both new and existing flares.

Vendor contacts were also the source for the following assumptions: pressure drop, commercially available flare sizes, flame emissivity, wind

velocity, number of pilots, pilot gas requirements, and purge gas requirements.[3,4] The values for each assumption were selected to be representative of flares designed for the chemical industry.

The total installed capital cost equation was derived from IT Enviroscience and from vendor contacts.[5,6] Review of the IT Enviroscience data indicated that the costs presented were specific for flaring propylene. Since the design was specific to propylene, a bias in the ratio of height to diameter occurs. Additional cost data were obtained from vendors for flare systems designed outside this ratio. Correlations relating the height and diameter of the flare to the total installed capital costs were developed and used in the costing of new flare systems. The selection of 150 Btu/scf as a minimum heating value for stable flaring was based on vendor contacts.[7] The fuel requirement is chemical specific and typically ranges from 100 to 150 Btu/scf.

| Calculation | Assumption(s) |
|---|---|
| (1) Calculate fuel requirement for the emission stream. | (a) A heating value of 150 Btu/scf is required for stable flaring. |
| (2) Calculate total mass flow. | |
| (3) Calculate flare tip diameter. $D = \left[\frac{2.72 \times 10^{-3} M \sqrt{\frac{T + 460}{MW}}}{\sqrt{\Delta p}}\right]^{\frac{1}{2}}$ | (a) $\Delta p$ = 27" w.c.<br>(b) 2" minimum size available. |
| (4) Calculate flare height. $H = \left[\sqrt{\frac{M \, LHV \, \epsilon}{12.56 \, I}} - 3.33D \sqrt{\frac{\Delta p}{55}} \cos \Theta\right]$ where $\Theta = \tan^{-1}\left[\frac{1.47 \, V_w}{500\sqrt{\frac{\Delta p}{55}}}\right]$ | (a) $\epsilon$ = 0.13<br>(b) I = 1200 Btu/hr ft$^2$<br>(c) $V_w$ = 60 mph<br>(d) 30' minimum height available. |

(5) Calculate number of pilots required.

(a)

| No. | Tip Diameter |
|---|---|
| 1 | $D \leq 8"$ |
| 2 | $8" \leq D \leq 24"$ |
| 3 | $24" < D \leq 42"$ |
| 4 | $42" < D \leq 70"$ |
| 5 | $D > 70"$ |

(6) Calculated pilot gas requirement.

(a) Each pilot requires 80 scfh natural gas.

(7) Calculate installed capital cost.

$$\text{Capital Cost} = 0.895\ (23086 + 193.6\ D^2 + 5.7\ H^2)$$

(8) Calculate purge gas requirement.

(a) Minimum flare gas velocity at tip of 0.04 ft/sec.

(9) Calculate steam requirement.

(a) 0.4 lb steam per lb vent gas required.

(10) Calculate annualized operating costs.

Nomenclature for Flare Algorithms

D = Flare tip diameter, in
H = Flare height, ft
LHV = Vent stream lower heating value, Btu/lb
M = Vent stream mass flowrate, lb/hr
MW = Vent stream mean molecular weight
$\Delta p$ = Flare tip pressure drop, in. $H_2O$
T = Vent stream temperature, °F
I = flame radiation intensity, $Btu/hr/ft^2$
$V_w$ = Wind velocity, miles/hr
$\varepsilon$ = flame emissivity
$\Theta$ = Wind effect

## F.2 INDUSTRIAL BOILER ALGORITHMS

The majority of the modeling provided for industrial boilers was focussed on determining the applicability of a boiler to destroying VOC

contained in distillation vent streams. In order to evaluate applicability, the boiler design parameters had to be examined along with the changes expected with the addition of a distillation vent stream to the boiler. The annual fuel savings associated with combustion of a distillation vent stream were also evaluated as part of the design procedure.

A boiler was assumed to be available for use in destroying the VOC in the vent streams. Therefore, only modifications to the boiler would be needed to permit its use as a control device. Since a single boiler size was assumed in the modeling, a single capital cost of modifications was used. Annualized costs were based primarily on the fuel savings resulting from the VOC combusted.

The selection of a 34.1 million Btu/hr, natural gas fired, watertube boiler as a "characteristic" boiler in the organic chemical industry was based on a survey of industrial boilers. The survey indicated that 70.1 percent of the industrial boiler capacity is made up of watertube boilers, while firetube and cast iron boilers make up 24.1 and 5.8 percent, respectively.[8] In addition, natural gas was the predominant fuel identified in the chemical industry; it accounted for 60.0 percent of the units and 53.7 percent of the capacity.[9] The average size natural gas boiler in the chemical industry was given in the survey report as $95 \times 10^6$ Btu/hr. Figure F-1 shows the size distribution of industrial natural gas fired watertube boilers.

The other assumptions presented in the following design procedure were based on modeling the specific boiler type described. Worst case costs were developed for the burner and fan modification. A 35 million Btu/hr burner capable of burning low heating value gases is provided. The fan modification includes a motor and fan capable of handling the vent gases and fuel products of combustion for the largest vent in the national emissions profile.

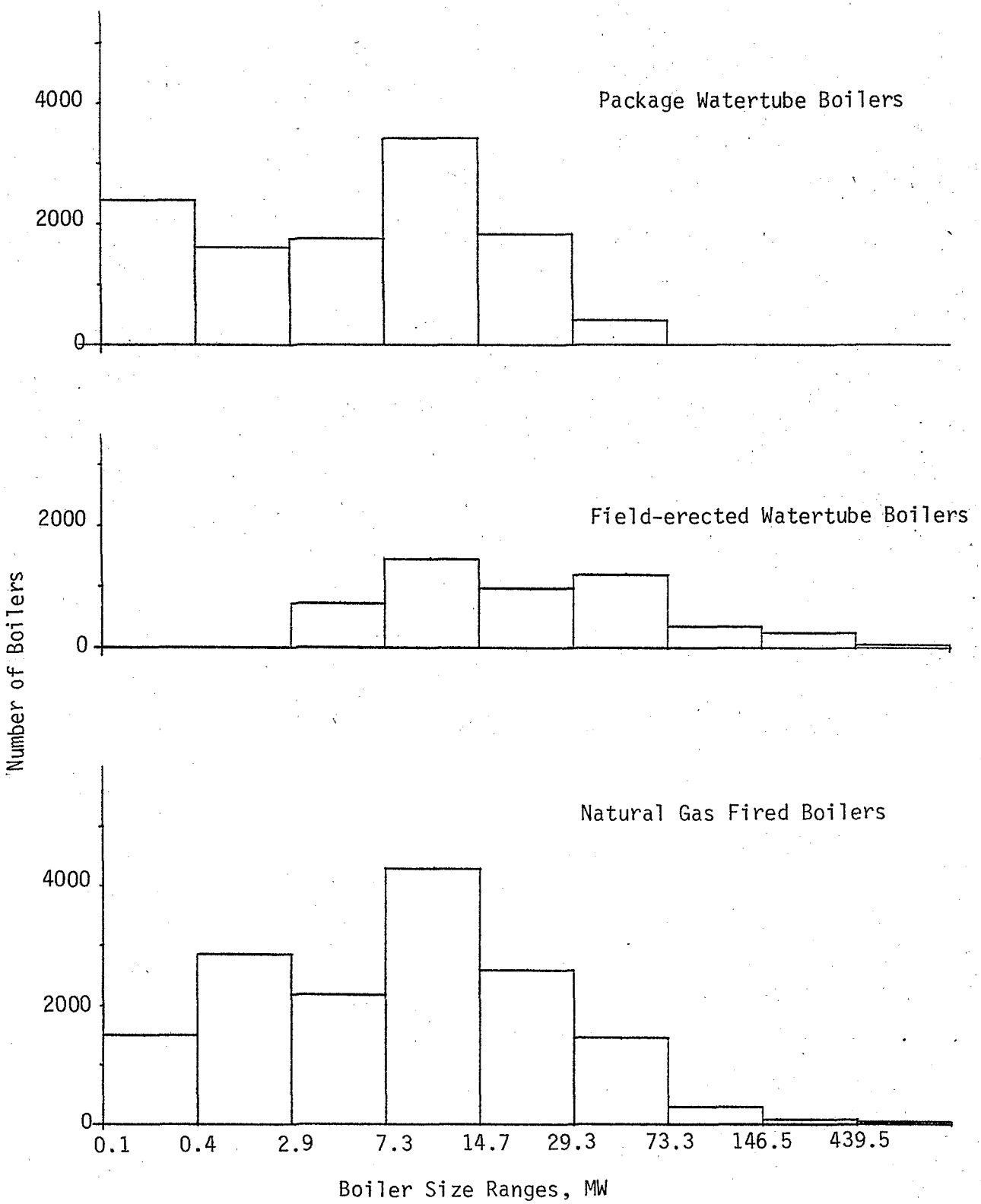


Figure F-1. Distribution of Industrial Boiler Types.

| Calculation | Assumption(s) |
|---|---|
| (1) Select boiler size and type. | (a) $Q_{total} = 34.1 \times 10^6$ Btu/hr<br>(b) Watertube |
| (2) Calculate fuel requirement, flue gas volume and composition, and adiabatic flame temperature for the emission stream. | (a) Natural gas fired<br>(b) 85% overall thermal efficiency<br>(c) 18% excess air for combustion |
| (3) Calculate furnace heat transfer.<br>$Q_{furn} = \sum_{1}^{n} M_i \, C_{pmi} \, (T_{AFT} - T_{fe})$ | (a) $T_{fe} = 2000°F$ |
| (4) Calculate furnace heat transfer area.<br>$A_{furn} = \frac{Q_{furn}}{\alpha \left[ \frac{T_g^4}{\frac{1}{\epsilon_s} + \frac{1}{\epsilon_g} - 1} - \frac{T_s^4}{\frac{1}{\epsilon_s} + \frac{1}{\alpha_g} - 1} \right]}$ | (a) Well-stirred furnace<br>(b) Bueter's correlations apply for gas emissivity and absorbtivity.<br>(c) Furnace heat transfer totally radiative.<br>(d) $\epsilon_s = 1$<br>(e) $T_s^s$ = Steam temperature (350°F)<br>(f) $T_g = [(T_{AFT}^4 + T_{fe}^4)/2]^{1/4}$ |
| (5) Calculate boiler heat transfer.<br>$Q_{boil} = Q_{total} = Q_{furn}$ | |
| (6) Calculate stack temperature.<br>$T_{stack} = 2000 - \frac{Q_{boil}}{\sum_{1}^{n} m_i \; C_{pmi}}$ | |
| (7) Calculate boiler convective heat transfer variable.<br>$h A = \frac{Q_{boil}}{\Delta T_{lm}}$ | (a) Boiler heat transfer totally convective. |

(8) Introduce vent stream into boiler.

(a) 10 percent supplemental fuel can be fired through burners.

(9) Recalculate flue gas volume and composition and adiabatic flame temperature.

(10) Calculate furnace heat transfer.

$$Q_{furn\ vs} = A_{furn}\ \alpha \left[ \frac{T_g^4}{\frac{1}{\epsilon_s} + \frac{1}{\epsilon_g} - 1} - \frac{T_g^4}{\frac{1}{\epsilon_s} + \frac{1}{\alpha_g} - 1} \right]$$

(11) Calculate furnace exit temperature.

$$T_{fe} = T_{AFT} - \frac{Q_{furn}}{\sum_n m_i\ C_{pm_i}}$$

(12) Assume stack temperature.

(13) Revise boiler heat transfer variable.

(a) Nusselt type heat transfer coefficient.

$$(h\ A)_{vs} = (h\ A)\ (C_{pm\ vs}/C_{pm})^{0.33}\ (k_{vs}/k)^{0.67}\ (\mu_{vs}/\mu)^{-0.27}\ (M_{vs}/M)^{0.6}$$

(14) Calculate stack temperature.

(15) Compare assumed and calculated stack temperatures. Return to (12) if necessary.

(16) Calculate boiler heat transfer.

$$Q_{boil\ vs} = \sum_n m_i\ C_{pmi}\ (T_{fe} - T_{stack})$$

(17) Calculate total heat transfer.

$$Q_{total\ vs} = Q_{furn\ vs} + Q_{boil\ vs}$$

(18) Compare total heat transfer with and without vent stream. If $Q_{total\ vs} < Q_{total}$, boiler is considered not applicable as a control device. Otherwise return to (8) and reduce supplemental fuel until $Q_{total\ vs} \cong Q_{total}$

(19) Calculate fuel requirement/savings.

(20) Calculate annualized operating cost.

(a) Worst case costs for burner/fan modifications. (Capital cost of modifications taken to be $10,000.)

Nomenclature For Boiler Algorithms

A = Area, $ft^2$

$C_{pm}$ = Mean heat capacity, Btu/lb mol/°F

h A = Convective heat transfer variable

k = Thermal conductivity

m = Molar flowrate, lb mol/hr

M = Mass flowrate, lb/hr

Q = Rate of heat transfer, Btu/min

T = Temperature, °R or °F

$\alpha$ = Absorptivity

$\epsilon$ = Emissivity

$\rho$ = Density

$\mu$ = Viscosity

$\sigma$ = Stefan - Boltzman constant

Subscripts:

AFT = Adiabatic flame temperature

boil = Boiler

furn = Furnace

fe = Furnace exit

g = Gas

lm = Log mean

s = Furnace surface

vs = Vent stream

## F.3 THERMAL INCINERATOR ALGORITHMS

The design and cost of the thermal incinerator were based on the control device evaluation reports developed from a survey of the organic chemical manufacturing industry.[10,11] The design criteria for the thermal incinerator system depend upon the constituents of the stream to be treated; for example, where a halogenated stream must be treated, the following considerations must be made:

(1) higher combustion temperature
(2) more costly materials of construction for corrosion and temperature
(3) hydrogen addition to convert the halogen to acid
(4) absorber to remove halogen acid
(5) caustic to treat the acid absorbed from the offgas.

In general, the design procedure for the thermal incinerator system involves the following steps:

(1) determination of oxygen requirements for complete combustion
(2) determination of natural gas requirements for flame stability
(3) determination of dilution air requirements to maintain a combustion temperature
(4) determination of hydrogen requirements to form halogen acid from halogenated VOC (if halogenated VOC is included in the vent stream)

Based on these requirements, a heat and material balance is made to determine the key design parameters used in evaluating capital costs. These parameters are volumetric gas flowrate through the incinerator and heat transfer area needed to extract the optimum amount of heat by recuperative heat exchange. The combustion chamber volume, which is used in determining the incinerator cost, can be computed with the known gas flowrate, combustion temperature, and residence time requirements. Capital cost algorithms for these systems were based on the cost curves presented in the survey reports of control devices in the organic chemical industry referenced above.

The results of the heat and material balance also allow the evaluation of several annualized costs for incinerator/scrubber systems: quench water requirements, make-up water requirements, and caustic requirements.

The stepwise calculation procedure is presented below. And the computer program (FORTRAN code) can be found in "Distillation Operations Regulatory Analysis Program Guide".[12]

| Calculation | Assumption(s) |
|---|---|
| (1) Calculate fuel requirement for the emission stream. | (a) 1600°F combustion chamber temperature, 2000°F for corrosive compounds.<br>(b) 18 percent excess air. |
| (2) Calculate fuel for flame stability. | (a) Auxiliary fuel supplied as follows:<br>H < 50 Btu/scf — 10 Btu/scf added<br>50 ≤ H<100 Btu/scf — 10% of stream heat value<br>100 ≤ H — No fuel |
| (3) Calculate flue gas volume. | |
| (4) Calculate combustion chamber volume. | (a) 0.75 second residence time, 1.0 second for corrosive compounds.<br>(b) 34.7 $ft^3$ minimum size. |
| (5) Size recuperative heat exchanger. (If there is no heat exchanger provided.) | (a) Overall heat transfer coefficent of 4 $Btu/ft^2/hr/°F$ assumed. |
| (6) If no corrosive compounds present go to (10). | |
| (7) Calculate quench water requirements. | (a) Flue gases must be cooled to 212°F before entering scrubber. |
| (8) Revise flue gas volume. | |
| (9) Calculate amount of caustic required. | |

(10) Calculate installed combustion chamber cost.

1600° combustion temperature:

Chamber cost = $3.58 [51,969. + 67.99 V_{cc} - 0.0014 V_{cc}^2]$

2000°F combustion temperature:

Chamber cost = $3.58 [50,490. + 55.33 V_{cc} - 0.0001 V_{cc}^2]$

(11) Calculate installed heat exchanger cost.

Exchanger cost = $2.28 [18,574. + 33.606 A_{he}^{0.9139}]$

(12) Calculate quencher/scrubber cost, if necessary.

Scrubber cost = $0.895 [180,139. + 54.992 F - 0.00123 F^2]$

(13) Calculate total installed capital cost.

(14) Calculate annualized operating cost.

Nomenclature For Thermal Incinerator/Scrubber Algorithms

A = Area, $ft^2$

F = Flue gas volumetric flowrate, scfm

V = Volume, $ft^3$

Subscripts:

cc = Combustion chamber

he = heat exchanger

F.4 PIPELINE ALGORITHMS

The pipeline models presented here were used in combination with all the combustion control options considered in the regulatory analysis (new flares, existing flares, boilers, incinerators). Since each control option required a pipeline connection, a separate model was developed. The model is based on an optimal pipe diameter design. For each distillation column, three pipe "legs" as shown in Figure F-2 were designed: a source leg, a compressor leg, and a pipe leg.

As discussed in Chapter 6, the final regulatory analysis involved a single column analysis of combustion control. That is, each individual column in a plant was costed with a separate pipeline system. (This individual column treatment is used only for selecting columns for control

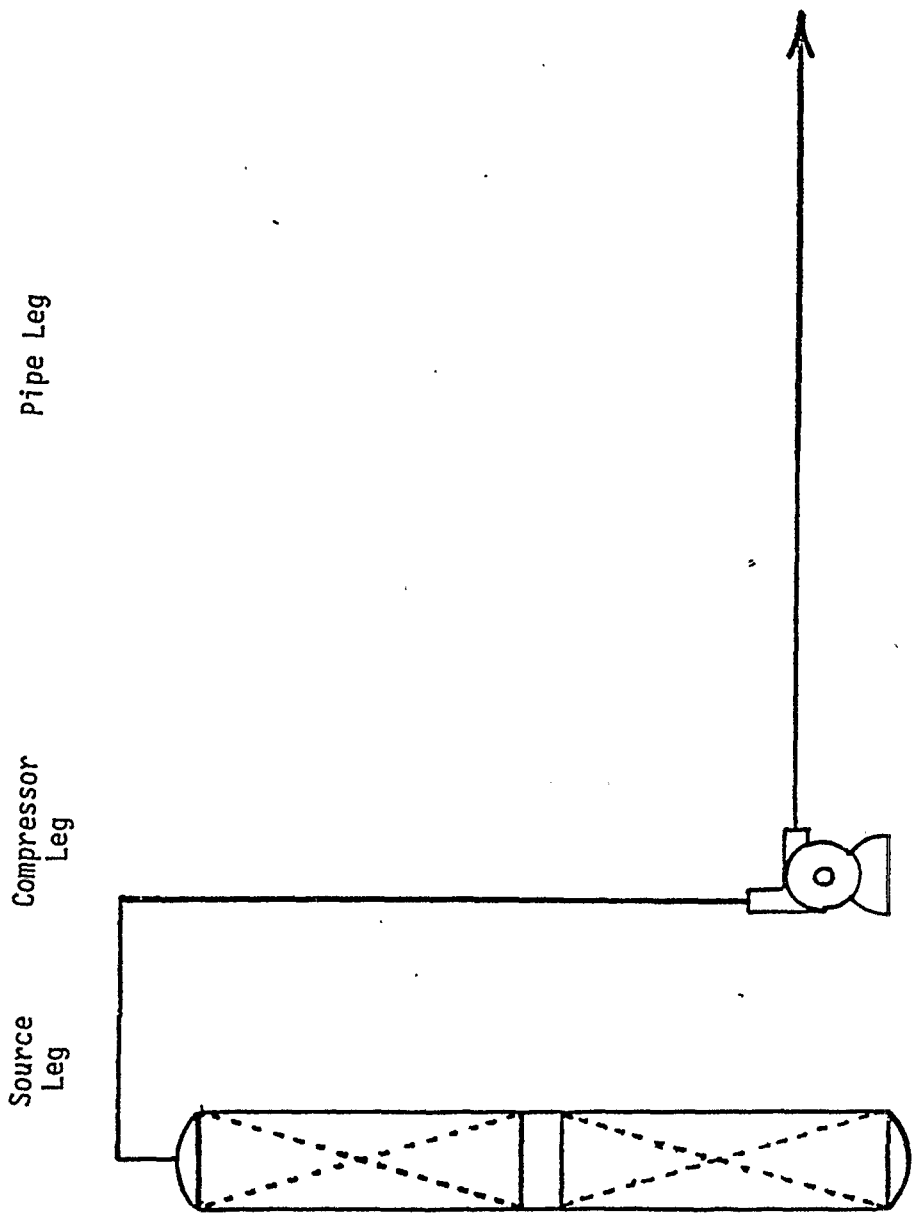


Figure F-2. Header schematic.

in the regulatory analysis.) Another approach to costing pipeline systems considers combining several vent streams from one plant to minimize the cost of piping. Multiple vents in process units are typically combined in a common header without creating a serious safety hazard. This combined vent approach was maintained in the costing done for the worst case model used in the economic screening analysis (Chapter 9) and for reporting estimated national control costs (Chapter 8). Since a chemical specific investigation of explosive limits would be necessary to determine those vents which could be combined and those which would require separate venting, the pipeline model assumed the first three vents to be individually vented. Each additional vent stream in a plant would then be combined with one of these three vents. Furthermore, as discussed in Chapter 6, analysis of plant costs using either pipeline costing approach results in similar costs.

Equations and correlations for economic pipe diameter, pressure drop, brake horsepower, and electricity were obtained from the literature.[13,14,15,16] The costs of installed piping, in $/100 ft of piping, was based on tabulated data provided by a vendor contact. Derivation of the equations presented for piping design are given in Reference 17. Compressor cost correlations as a function of horsepower were developed from vendor contacts.

| Calculation | Assumption(s) |
|---|---|
| (1) Identify number of distillation vents. | |
| (2) Divide into 3 vents such that combined flows are nearly identical. | (a) Vents can be combined into 3 headers without safety problems. |
| (3) Calculate economic source leg diameter. | |

$D_s = 0.042F - 0.472$ (for $F < 40$ scfm)

$D_s = 0.009F + 2.85$ (for 40 scfm $\leq F < 700$ scfm)

(4) Select commercially available pipe diameter.

(a) Schedule 40 carbon steel pipe.

(5) Calculate source leg pressure drop.

$$\Delta P = CM^2 \ (1 \times 10^{-9})/\rho$$

(6) Calculate economic compressor leg diameter.

$$D_c = 0.015F + 0.56 \text{ (for <150 scfm)}$$

$$D_c = 0.0042F + 2.58 \text{ (for 150 scfm } \leq F < 1400 \text{ scfm)}$$

(7) Select commercially available diameter.

(8) Calculate compressor leg pressure drop.

(9) Calculate economic pipe leg diameter.

$$D_p = 0.024F + 0.549 \text{ (for <65 scfm)}$$

$$D_p = 4.8 \log_{10} (F) - 7.33 \text{ (for 65 scfm } \leq F < 700 \text{ scfm)}$$

(10) Select commercially available diameter.

(11) Calculate pipe leg pressure drop.

(12) Calculate compressor horsepower requirement.

$$BHP = \frac{0.0642 \ F}{(0.286) \ (0.50)} \left[ \frac{16.7 + \Delta P_p}{14.7 - \Delta P_s - \Delta P_c} \right]^{0.286} - 1$$

(13) Calculate compressor cost.

Compressor cost = 664.7 + (332.7 BHP) for BHP <37.5
Compressor cost = 52.72 BHP + 11,740. for 37.5 $\leq$ BHP <225

(14) Calculate pipe for each leg.

(a) Assumes pipeline components as in Table F-1.

(15) Calculate electricity requirement.

$$kwh = 0.746 \ BHP$$

TABLE F-1. PIPELINE COMPONENTS

| Hardware | Source Leg | Compressor Leg | Pipe Leg |
|---|---|---|---|
| Schedule 40 pipe | 70' | 20' | 500' |
| Check Valves | 1 | 1 | 1 |
| Gate Valves | 4 | 2 | 3 |
| Control Valves | 1 | 0 | 1 |
| Strainers | 1 | 1 | 1 |
| Elbows | 8 | 6 | 6 |
| Tees | 6 | 2 | 3 |
| Flanges | 15 | 10 | 14 |
| Drip Valves | 1 | 1 | 1 |
| Expansion Fittings | 2 | 1 | 1 |
| Bolt & Gasket Sets | 15 | 12 | 12 |
| Hangers | 9 | 4 | 50 |
| Field Welds | 18 | 12 | 14 |

Nomenclature For Pipeline Algorithms

BHP = Compressor brake horsepower, bhp

C = Coefficient based on diameter

D = Diameter, inches

F = Volumetric flowrate, scfm

kwh = Compressor electricity requirement

M = Mass flowrate, lb/hr

$\Delta P$ = Pressure drop, in $H_2O$

p = Density, $lb/ft^3$

Subscripts:

c = Compressor leg

p = Pipe leg

s = Source leg

## F.5 REFERENCES


1. Memo from Senyk, D. and J. Stelling, Radian Corporation, to Distillation File. August 30, 1982. 192 p. Distillation Operations Regulatory Analysis Program Guide.

2. Kalcevic, V. (Hydroscience). Emission Control Options for the Synthetic Organic Chemicals Manufacturing Industry, Control Device Evaluation: Flares and the Use of Emissions as Fuels. (Prepared for U. S. Environmental Protection Agency.) Research Triangle Park, NC. EPA Contract No. 68-02-2577. August 1980.

3. Joseph, D., et al. (Energy & Environmental Research Corporation) Evaluation of the Efficiency of Industrial Flares, Interim Report. (Prepared for U. S. Environmental Protection Agency.) Research Triangle Park, NC. EPA Contract No. 68-02-3661. January 1982.

4. Straitz, J. F. Nomogram for Sizing Process Flares. Parts 1 and 2. Philadelphia, Pennsylvania. National Air Oil Burner Company, Inc. (In-hours brochure). 1979.

5. Reference 2, p. B-3.

6. Memo from Sarasua, A. I., Energy and Environmental Analysis, to Polymers and resins file. May 12, 1982. 15 p. Information on the flare costing program (FLACOS).

7. Reference 3.

8. Devitt, T., et al (PEDCo). The Population of Industrial and Commercial Boilers. (Prepared for U. S. Environmental Protection Agency.) Research Triangle Par, NC. EPA Contract No. 68-02-2603. May 1979.

9. Reference 8, p. xix.

10. Blackburn, J. W. (Hydroscience). Emission Control Options for the Synthetic Organic Chemicals Manufacturing Industry, Control Device Evaluation: Thermal Oxidation. (Prepared for U. S. Environmental Protection Agency.) Research Triangle Park, NC. EPA Contract No. 68-02-2577. July 1980.

11. Basdekis, H. S. (Hydroscience). Emissions Controls Options for the Synthetic Organic Chemicals Manufacturing Industry, Control Device Evaluation: Thermal Oxidation Supplement, VOC Containing Halogens or Sulfur. (Prepared for U. S. Environmental Protection Agency.) Research Triangle Park, NC. EPA Contract No. 68-02-2577. November 1980.

12. Reference 1.

13. Perry, R. H., and C. H. Chilton, editors. Chemical Engineer's Handbook. 5th Edition. New York, McGraw-Hill, 1973. p. 5-31.

14. Crane Engineering Division. Flow of Fluids Through Valves, Fittings, and Pipe. New York, Crane Company. Technical Paper No. 410, 1969. p. 3-22.

15. Memo from Desai, T., Energy & Environmental Analysis, to file. March 16, 1982. Procedure to estimate piping costs.

16. Reference 12, p. 24-3.

17. Memo from Kawecki, T., Energy & Environmental Analysis, to file. November 13, 1981. Distillation pipeline costing model documentation.

# APPENDIX G
# TRE DEVELOPMENT

# APPENDIX G
# TRE DEVELOPMENT

In order to determine the "reasonableness" of requiring combustion controls (flare, boiler, or incinerator) on distillation vent streams, the total resource effectiveness (or TRE) of control must be evaluated. The TRE represents the total resources (cost, energy) required to remove volatile organic compounds (VOC) for a distillation vent stream. To be of maximum utility, the TRE is based on vent stream characteristics that are readily available or determined.

This appendix presents the derivation of the equations for TRE and TRE index. The TRE equations are generalized cost equations developed from the calculated control costs for individual distillation vent streams listed in the screened National Emission Profile (NEP). All of the coefficients for each generalized cost equation were determined by linear regression using the General Linear Model Procedure of the SAS* software library.

## G.1 DEFINITION OF TRE INDEX

TRE (expressed in $/Mg) is a measure of the total resources required for control of a unit of VOC from a single distillation unit. For nonhalogenated vent streams, the TRE is calculated based on control by flares. However, this does not preclude actual use of a boiler or incinerator. It simply means that the TRE determination for nonhalogenated vent streams is based on the cost of flaring. For halogenated vent streams (defined as streams containing 20 ppm or greater halogenated species), the TRE is calculated based on control by incinerator/scrubber systems. All resources expected to be used in VOC control are considered in the TRE development. The primary resources used are capital charges, supplemental natural gas, and, for halogenated vent streams, caustic. Other resources used include labor, electricity, and, for halogenated vent streams, make-up water for scrubbing and quenching of the incinerator offgases.

---

*Statistical Analysis System Institute, Inc., Post Office Box 10066, Raleigh, North Carolina 27605.

The TRE for any distillation unit is based on the offgas characteristics (specifically flowrate, VOC emission rate, and net heating value of the vent stream). Once the TRE has been calculated, the TRE index is determined by simply dividing the TRE by $1900/Mg. Therefore, the TRE index is a dimensionless measure of the resource burden associated with control of a new or modified distillation unit. In order to make the TRE index independent of the general inflation rate, certain assumptions have been made to fix the relative costs of various resources, such as carbon steel construction and natural gas fuel.

Within the framework of a new source performance standard, a particular TRE index value can be chosen to serve as the upper limit for requiring combustion control of a distillation vent stream. Distillation emission streams with associated TRE indices above that upper limit would not have to be controlled. Use of the TRE index in this manner would encourage the use of product recovery techniques or process modifications to reduce VOC emissions. The TRE index is calculated based on the vent stream characteristics at the outlet of the final piece of product recovery equipment. Use of product recovery equipment on a vent stream would decrease VOC emissions and, thereby, increase the TRE index value.

## G.2 DEVELOPMENT OF TRE EQUATION COEFFICIENTS

The total resources required to control VOC emissions from a distillation vent are primarily dependent on three vent stream characteristics: flowrate, VOC emissions rate, and net heating value. These characteristics are primary factors considered in the design and costing of flare and incinerator control systems (see Appendix F). Flowrate is perhaps the most important factor to be considered in sizing control equipment. It impacts auxiliary equipment sizing (piping, fans, etc.) as well. The VOC emissions rate and heat content of a vent stream impact annualized control costs by determining the supplemental fuel requirements. Therefore, an equation for calculating TRE was assumed to be a function of these three vent stream characteristics.

The heat content of the vent stream cannot be assumed to be a constant function of flowrate and VOC emissions rate for any of the control situations considered, since the heat of combustion (on a mass basis) ranges from about 48.8 MJ/kg (21,000 Btu/lb) for paraffins and olefins to much lower values for aromatic compounds, oxygenated compounds, and halogenated compounds. Thus, a simplification of the TRE equation by using a constant heat content is not feasible.

The coefficients for the three TRE equation parameters depend on the control device used (i.e., either a flare or an incinerator). Therefore, three sets of coefficients were determined for each of the following situations: combustion with a flare for vent streams with heating value below 5.6 MJ/scm (150 Btu/scf), combustion with a flare for vent streams with a heating value at or above 5.6 MJ/scm (150 Btu/scf), and combustion with an incinerator/scrubber system.

In determining the coefficients, the resource requirements for control were calculated first for all combinations of streams (within a plant) represented in the screened National Emission Profile (NEP). The costing algorithms used in the regulatory analysis and outlined in Appendix F were used in calculating these resource requirements. The resource requirement values obtained provided the data input to the linear regression models which, in turn, computed correlation coefficients.

## G.3 TRE CORRELATION RESULTS

The total resource requirement for controlling a vent stream includes the cost associated with the control device and the cost associated with piping the vent stream to the control device. Therefore, correlation coefficients were determined for the annualized cost of flares, incinerators/scrubbers, flare piping, and incinerator piping. These individual component costs were then combined to yield the total resource requirement for each of the three situations described previously.

### G.3.1 Flare Pipeline Correlation

A linear regression was performed on the pipeline cost data for flares for a range of flows from 0.003 to 18.0 scm/min.* This regression had an $r^2$

*This range includes all expected flows from new distillation vents.

value of 0.992 and the resulting model is accurate to ± $495/yr at a 95 percent confidence level:

$$\text{Cost} = 1716\ Q^{0.8} + 2959 \qquad \text{(G-1)}$$

where:

Cost = Annual Cost ($/yr)

Q = Vent Stream Flowrate (scm/min)

G.3.2 Incinerator Pipeline Correlation

The linear regression performed on the pipeline cost data for incinerators yielded an equation of the same form as that for flare pipeline cost for the same flow range. This regression had an $r^2$ value of 0.993 and was determined to be accurate to ± $363.0/yr at a 95 percent confidence level:

$$\text{Cost} = 1312\ Q^{0.8} + 2292 \qquad \text{(G-2)}$$

G.3.3 Flare Correlation

A single model for annualized flare cost would not accurately cover all streams in the NEP. The supplemental fuel required for streams with a heating value below 5.6 MJ/scm (150 Btu/scf) required a different cost model than that resulting for streams with a heating value equal to or above 5.6 MJ/scm. Therefore, two separate linear regressions were made, one for streams with a heating value below 5.6 MJ/scm and one for streams with a heating value equal to or above 5.6 MJ/scm. These regressions yielded the following equations with $r^2$ values of 0.9999 and 0.971, respectively:

Heating value below 5.6 MJ/scm

$$\text{Cost} = 16651\ Q - 2465\ QH - 1.43\ V + 17923 \qquad \text{(G-3)}$$

Heating value equal to or above 5.6 MJ/scm

$$\text{Cost} = 2338\ Q + 128.9\ QH - 44.8\ V + 18009 \qquad \text{(G-4)}$$

where

H = Vent Stream Heating Value (MJ/scm)

V = VOC Emission Rate (kg/hr)

The equation for low heating values, accurate to ± $648.3/yr at a 95 percent confidence level, was developed for flows ranging from 0.037 to 18.0 scm/min and a range of heating values below 5.6 MJ/scm. The data base included a range of VOC emission rates from 0 to 100 kg/hr. The equation for high heating values, accurate to ± $3759/yr at a 95 percent confidence level, was determined for flows ranging from 0.003 to 16.3 scm/min and a range of heating values from 5.6 to 185 MJ/scm. The data base included a range of VOC emission rates from 0.1 to 1700 kg/hr.

G.3.4 Incinerator Correlation

A multivariable regression was run for incinerator annual costs. This regression included the same variables as for the flare annualized cost equation, plus additional terms to characterize the incinerator more fully. The additional terms were justified since an incinerator design is more dependent upon operating temperature, flow rate and vent stream heat content than is the design of a flare. The following model, accurate to ±$23209/yr, was developed for a range of flows from 0.003 to 18.0 scm/min and heating values ranging from 0 to 185 MJ/scm. The regression had an $r^2$ value of 0.936.

$$\text{Cost} = 20603\ Q + 2399\ H + 377\ QH - 33908\ Q^{0.8} - 6772\ H^{0.8} + 76.7\ V + 211013 \quad \text{(G-5)}$$

G.3.5 Total Annualized Cost Equations

Adding the equation for pipeline annual cost to the equation for the annualized cost of the applicable combustion device gives an equation for the total annualized cost for flares and for incinerators. The resulting equations for flares are as follows:

Heating value below 5.6 MJ/scm

$$\text{Cost} = 16651\ Q + 1716\ Q^{0.8} - 2465\ QH - 1.43\ V + 20881 \quad \text{(G-6)}$$

Heating value equal to or above 5.6 MJ/scm

$$\text{Cost} = 2338\ Q + 1716\ Q^{0.8} + 128.9\ QH - 44.8\ V + 20967 \quad \text{(G-7)}$$

The equation for an incinerator is as follows:

$$\text{Cost} = 20603\,Q - 32596\,Q^{0.8} + 2399\,H + 377\,QH - 6772\,H^{0.8} + 76.7\,V + 213305 \qquad \text{(G-8)}$$

## G.4 DEVELOPMENT OF TRE AND TRE INDEX EQUATIONS

Dividing the annualized cost equations by the VOC emission reduction give equations for annualized control cost per megagram ($/Mg) or TRE. VOC emission reduction is the annual VOC emission rate* multiplied by the control efficiency of the combustion device (98 percent). The TRE equations are of the form:

$$\$/Mg = (aQ + bQ^{0.8} + cH + dQH + eH^{0.8} + fV + g)/V \qquad \text{(G-9)}$$

Where

$\$/Mg$ = Annualized Control Cost Per Megagram VOC Reduced

$Q$ = Vent Stream Flowrate (scm/min)

$H$ = Vent Stream Heating Value (MJ/scm)

$V$ = VOC Emission Rate (kg/hr)

and where coefficients a through g are as shown in Table G-1.

Dividing these equations by $1900/Mg gives equations for the TRE index. The format of the TRE index equations is the same as the format for the $/Mg equations. The coefficients for the TRE index are shown in Table G-2.

---

*Annual VOC emission rate,

$$\frac{Mg}{yr} = V \left(\frac{kg}{hr}\right) \times 8760 \left(\frac{hr}{yr}\right) \times 0.001 \left(\frac{Mg}{kg}\right) \times 0.77 \text{ (capacity utilization)}$$

TABLE G-1. COEFFICIENTS FOR TRE ($/Mg) EQUATION

| | a | b | c | d | e | f | g |
|---|---|---|---|---|---|---|---|
| Flare<br>H < 5.6 MJ/scm | 2520 | 260 | 0 | -373 | 0 | -0.216 | 3160 |
| Flare<br>H $\geq$ 5.6 MJ/scm | 354 | 260 | 0 | 19.5 | 0 | -6.78 | 3170 |
| Incinerator | 3116 | -4931 | 362 | 56.9 | -1022 | 11.6 | 32260 |

TABLE G-2. COEFFICIENTS FOR TRE INDEX EQUATION

| | a | b | c | d | e | f | g |
|---|---|---|---|---|---|---|---|
| Flare<br>H < 5.6 MJ/scm | 1.33 | 0.137 | 0 | -0.196 | 0 | -0.00011 | 1.66 |
| Flare<br>H $\geq$ 5.6 MJ/scm | 0.186 | 0.137 | 0 | 0.0103 | 0 | -0.0036 | 1.67 |
| Incinerator | 1.64 | -2.60 | 0.190 | 0.0300 | -0.538 | 0.0061 | 17.0 |

# APPENDIX H

## UNITED STATES ORGANIC CHEMICAL PRODUCERS, PLANT LOCATIONS, AND CHEMICALS PRODUCED, 1978

APPENDIX H

UNITED STATES ORGANIC CHEMICAL PRODUCERS, PLANT LOCATIONS, AND CHEMICALS PRODUCED, 1978

| Producer | Plant Location | Chemicals Produced |
|---|---|---|
| Agway, Inc. | Olean, NY | Urea |
| Airco, Inc. | Cleveland, OH | Cyclopropane |
| | Louisville, KY | Ethyne |
| Air Products & Chemicals, Inc. | Pace, FL | N-Methylmethanamine |
| | Pensacola, FL | Methanol<br>Methylamine<br>Urea |
| Akzona | McCook, IL | (2-Ethylhexyl) amine |
| | Morris, IL | (2-Ethylhexyl) amine |
| Alcolac, Inc. | Baltimore, MD | Dodecylbenzenesulfonic acid, sodium salt<br>Linear alcohols, sulfated, sodium salt, mixed |
| Allegheny Ludlum Industries, Inc. | LaPorte, TX | Carbonic dichloride |
| Allied Chemical Corp. | Baton Rouge, LA | Chloroethane<br>Dichlorodifluoromethane<br>1,2,-Dichloroethane<br>Trichlorofluoromethane<br>1,1,2-Trichloro-1,2,2-trifluoro-ethane |
| | Danville, IL | Dichlorodifluoromethane<br>Trichlorofluromethane |
| | Detroit, MI | Naphthalene |
| | Elizabeth, NJ | Dichlorodifluoromethane<br>Trichlorofluoromethane |
| | El Segundo, CA | Dichlorodifluoromethane<br>1,3-Isobenzofurandione<br>Trichlorofluoromethane |

| Producer | Plant Location | Chemicals Produced |
|---|---|---|
| | Frankford, PA | 1-Methyl-1-phenylethyl hydroperoxide<br>Phenol<br>2-Propanone |
| | Geismar, LA | Ethene<br>Urea |
| | Helena, AR | Urea |
| | Hopewell, VA | Cyclohexanol<br>Cyclohexanone<br>Cyclohexanone oxime<br>Hexahydro-2H-azepin-2-one<br>Hexanedioic acid |
| | Ironton, OH | Naphthalene |
| | Moundsville, WV | Carbonic dichloride<br>Chloromethane<br>Dichloromethane<br>1,3-Diisocyanato-2-(and 4-) methylbenzene<br>1-Methyl-2,4-dinitrobenzene (and 2-Methyl-1,3-dinitrobenzene)<br>1-Methyl-2,4-dinitrobenzene<br>Tetrachloromethane<br>Trichloromethane |
| | Omaha, NB | Urea |
| | South Point, OH | Formaldehyde<br>1,3,5-Triazine-2,4,6-triamine<br>Urea |
| Amerada Hess | St. Croix, VI | Benzene<br>Dimethylbenzenes, mixed<br>Methylbenzene |
| American Cyanamid Co. | Bound Brook, NJ | Benzenamine<br>4-Methyl-1,3-benzenediamine |
| | New Orleans, LA | Hydrocyanic acid<br>2-Propenenitrile<br>1,3,5-Triazine-2,4,6-triamine<br>Urea |
| | Willow Island, WV | Benzenamine<br>Nitrobenzene<br>2-Propanone |

| Producer | Plant Location | Chemicals Produced |
|---|---|---|
| American Hoechst Corp. | Baton Rouge, LA | Ethenylbenzene<br>Ethylbenzene |
| | Spartansburg, SC | 1,4-Benzenedicarboxylic acid/ 1,4-Benzenedicarboxylic acid, dimethyl ester |
| American Petrofina | Beaumont, TX | Dimethylbenzenes, mixed<br>Methylbenzene |
| | Big Spring, TX | Benzene<br>Cyclohexane<br>1,2-Dimethylbenzene<br>Ethenylbenzene<br>Ethylbenzene<br>Methylbenzene<br>2-Methyl-1-propene<br>1-Propene |
| | Groves, TX | 1-Propene |
| | Port Arthur, TX | Benzene |
| Archer Daniels Midland Co. | Decatur, IL | Ethanol |
| Arizona Chemical Co. | Panama City, FL | 2,6,6-Trimethylbicyclo [3.1.1]-hept-2-ene |
| Armco Steel Corp. | Middletown, OH | Benzene<br>Dimethylbenzenes, mixed<br>2-Methylbutane |
| Arol Chemical Products Co. | Newark, NJ | Dodecylbenzenesulfonic acid, sodium salt |
| Ashland Oil, Inc. | Ashland, KY | Benzene<br>Dimethylbenzenes, mixed<br>Methylbenzene<br>(1-Methylethyl) benzene<br>Naphthalene<br>1-Propene |
| | Janesville, WI | Dodecylbenzenesulfonic acid, sodium salt<br>Linear alcohols, ethoxylated, mixed |
| | Louisville, KY | 1-Propene |
| | Neal, WV | 2,5-Furandione |

| Producer | Plant Location | Chemicals Produced |
|---|---|---|
| | North Tonawanda, NY | Benzene<br>Dimethylbenzenes, mixed<br>Methylbenzene |
| Atlantic Richfield Co. | Beaver Valley, PA | Ethylbenzene<br>Diethylbenzene |
| | Carson, CA | Benzene<br>Dimethylbenzenes, mixed<br>1-Dodecene<br>Ethene<br>Methylbenzene<br>1-Nonene<br>1-Propene |
| | Channelview, TX | Benzene<br>1,3-Butadiene<br>2-Butanol<br>2-Butanone<br>Ethene<br>Methylbenzene<br>2-Propanol<br>1-Propene |
| | Houston, TX | Benzene<br>Dimethylbenzenes, mixed<br>1,2-Dimethylbenzene<br>1,3-Dimethylbenzene<br>1,4-Dimethylbenzene<br>Ethene<br>Ethenylbenzene<br>Ethylbenzene<br>Methylbenzene<br>1-Propene |
| | Port Arthur, TX | Ethylbenzene |
| Avtex Fibers, Inc. | Meadville, PA | Acetic acid, anhydride |
| BASF Wyandotte Corp. | Geismar, TX | 1,4-Butanediol<br>Carbonic dichloride<br>1,3-Diisocyanato-2-(and 4-) methylbenzene<br>Oxirane<br>2,2'-Oxybisethanol<br>1-Propene |

| Producer | Plant Location | Chemicals Produced |
|---|---|---|
| | Kearny, NJ | 1,2-Benzenedicarboxylic acid bis (2-ethylhexyl) ester<br>1,3-Isobenzofurandione |
| | Wyandotte, MI | Linear alcohols, ethoxylated, mixed<br>Methyloxirane |
| Beckman Inst., Inc. | Palo Alto, CA | Heptane |
| Bethlehem Steel | Bethlehem, PA | Benzene<br>Dimethylbenzenes, mixed<br>Methylbenzene |
| | Sparrows Point, MD | Benzene<br>1,1'-Biphenyl<br>Dimethylbenzenes, mixed<br>Methylbenzene |
| Bison Nitrogen Products | Woodward, OK | Urea |
| Bofors Lakeway, Inc. | Muskegon, MI | Dodecylbenzenesulfonic acid, sodium salt<br>Linear alcohols, ethoxylated and sulfated, sodium salt, mixed<br>Linear alcohols, sulfated, sodium salt, mixed |
| Borden | Demopolis, AL | Formaldehyde |
| | Diboll, TX | Formaldehyde |
| | Fayetteville, NC | Formaldehyde<br>1,3,5,7-Tetraazatricyclo-[3.3.1.1$^{3,7}$]decane |
| | Freemont, LA | Formaldehyde |
| | Geismar, LA | Acetic acid<br>Acetic acid, ethenyl ester<br>Chloroethene<br>Formaldehyde<br>Methanol<br>Urea |
| | Louisville, KY | Formaldehyde |
| | Kent, WA | Formaldehyde |
| | LaGrande, OR | Formaldehyde |
| | Missoula, MT | Formaldehyde |

| Producer | Plant Location | Chemicals Produced |
|---|---|---|
| | Sheboygan, WI | Formaldehyde |
| | Springfield, OR | Formaldehyde |
| Borg-Warner Corp. | Morgantown, WV | Nonylphenol |
| CF&I Steel | Pueblo, CO | Benzene<br>Dimethylbenzenes, mixed<br>Methylbenzene |
| C.F. Industries, Inc. | Donaldsonville, LA | Urea |
| | Freemont, NB | Urea |
| | Tunis, NC | Urea |
| | Tyner, TN | Urea |
| Calcasieu Chemical Corp. | Lake Charles, LA | Oxirane |
| Caribe Isoprene Corp. | Ponce, PR | 2-Methyl-1,3-butadiene |
| Celanese Corp. | Bay City, TX | Acetaldehyde<br>Acetic acid, ethenyl ester<br>Acetic acid<br>1-Butanol<br>Cyclohexanol<br>Cyclohexanone<br>1,6-Hexanediamine<br>1,6-Hexanediamine adipate<br>Hexanedioic acid |
| | Bishop, TX | Acetic acid, butyl ester<br>2,2-Bis (hydroxymethyl)-1,3-propanediol<br>Butanal<br>1,2-(and 1,3-)Butanediol<br>1-Butanol<br>Formaldehyde<br>4-Hydroxy-4-Methyl-2-pentanone<br>Methanol<br>2-Methylpropanol<br>2-Methyl-1-Propanol<br>1-Propanol |
| | Charlotte, NC | Dodecylbenzenesulfonic acid, sodium salt |

| Producer | Plant Location | Chemicals Produced |
|---|---|---|
| | Clear Lake, TX | Acetaldehyde<br>Acetic acid<br>2,2'-[1,2-Ethanediylbis(oxy)] bisethanol<br>Methanol<br>Oxirane<br>2,2'-Oxybisethanol<br>2-Propenoic acid<br>2-Propenoic acid, butyl ester<br>2-Propenoic acid, ethyl ester |
| | Narrows, VA | Acetic acid, anhydride |
| | Newark, NJ | Formaldehyde |
| | Pampa, TX | Acetic acid<br>Acetic acid, anhydride<br>Acetic acid, ethyl ester<br>2-Butanone<br>Propanoic acid<br>2-Propenoic acid, butyl ester |
| | Pasadena, TX | Acetic acid, ethenyl ester |
| | Rock Hill, SC | Acetic acid, anhydride<br>Formaldehyde |
| The Charter Co. | Houston, TX | Benzene<br>Dimethylbenzenes, mixed<br>1,4-Dimethylbenzene<br>Ethylbenzene<br>Heptane<br>Hexane<br>Methylbenzene<br>1-Propene |
| Chemical Exchange Co., | Houston, TX | 2,2'-[1,2-Ethanediylbis(oxy)] bisethanol<br>2,2'-Oxybisethanol |
| The Chemithon Corp. | Seattle, WA | Dodecylbenzenesulfonic acid, sodium salt |
| Chemol, Inc. | Greensboro, NC | 1,1'-Biphenyl |
| Chemplex Co. | Clinton, IA | Ethene<br>1-Propene |
| Ciba-Geigy Corp. | McIntosh, AL | 2,4,6-Trichloro-1,3,5-triazine |

| Producer | Plant Location | Chemicals Produced |
|---|---|---|
| | St. Gabriel, LA | 6-Chloro-N-ethyl-N'-(1-methylethyl)-1,3,5-triazine-2,4-diamine<br>Hydrocyanic acid<br>2,4,6-Trichloro-1,3,5-triazine |
| | Toms River, NJ | (Chloromethyl) oxirane |
| Cities Service Co. | Copperhill, TN | Dodecylbenzenesulfonic acid<br>Dodecylbenzenesulfonic acid, sodium salt |
| | Lake Charles, LA | Benzene<br>Dimethylbenzenes, mixed<br>1,2-Dimethylbenzene<br>1,4-Dimethylbenzene<br>Ethene<br>2-Methyl-1-propene<br>1-Propene |
| Clark Oil & Refining Corp. | Blue Island, IL | (1-Methylethyl) benzene<br>Phenol<br>2-Propanone<br>1-Propene |
| | Wood River, IL | 1-Propene |
| Coastal States Gas Co. | Cheyenne, WY | Urea |
| | Corpus Christi, TX | Benzene<br>Dimethylbenzenes, mixed<br>Methylbenzene<br>(1-Methylethyl) benzene<br>1-Propene |
| Columbia Nitrogen Corp. | Augusta, GA | Urea |
| Columbia Organic Chemicals Co. | Columbus, SC | Iodomethane |
| Commonwealth Oil Refining Co. | Ponce, PR | Benzene<br>Cyclohexane<br>Dimethylbenzenes, mixed<br>1,2-Dimethylbenzene<br>Ethylbenzene<br>Methylbenzene |
| Concord Chemical Co., Inc. | Camden, NJ | Tallow acids, sodium salt |

| Producer | Plant Location | Chemicals Produced |
|---|---|---|
| Continental Chemical Co. | Clifton, NJ | Dodecylbenzenesulfonic acid<br>Dodecylbenzenesulfonic acid, sodium salt |
| Continental Oil Co. | Baltimore, MD | Dodecylbenzene, linear<br>Dodecylbenzene, non-linear<br>Dodecylbenzenesulfonic acid, sodium salt |
| | Hammond, IN | Dodecylbenzenesulfonic acid |
| | Newark, NJ | 2,6-Dimethylphenol |
| | Westlake, LA | 1-Butanol<br>Chloroethane<br>Chloromethane<br>1,2-Dichloroethane<br>1-Dodecene<br>Ethene<br>Linear alcohols, ethoxylated, mixed<br>1-Propene |
| Cooperative Farm Chemicals Assoc. | Lawrence, KS | Urea |
| Copolymer Rubber & Chemicals | Baton Rouge, LA | 1,3-Butadiene |
| Core-Lube, Inc. | Danville, IL | Benzenesulfonic acid |
| CosMar, Inc. | Carville, LA | Ethenylbenzene<br>Ethylbenzene |
| Crest Chemical Co. | Newark, NJ | Dodecylbenzenesulfonic acid<br>Linear alcohols, ethoxylated and sulfated, sodium salt, mixed |
| Croda, Inc. | Mill Hall, PA | Linear alcohols, ethoxylated, mixed |
| | Newark, NJ | Linear alcohols, ethoxylated, mixed |
| Crown Central Petroleum | Pasadena, TX | Benzene<br>Dimethylbenzenes, mixed<br>1,2-Dimethylbenzene<br>Methylbenzene |

| Producer | Plant Location | Chemicals Produced |
|---|---|---|
| Cyclo Chemicals Corp. | Miami, FL | Linear alcohols, ethoxylated, mixed |
| Dart Industries, Inc. | Elyria, OH | 2-Butanone |
| Denka Chemicals Co. | Houston, TX | 2-Chloro-1,3-butadiene<br>1,4-Dichloro-2-butene<br>3,4-Dichloro-1-butene<br>2,5-Furandione |
| Diamond Shamrock Corp. | Belle, WV | Chloromethane<br>Dichloromethane<br>Trichloromethane |
| | Cedartown, GA | Nonylphenol, ethoxylated<br>Tallow acids, sodium salt |
| | Charlotte, NC | Nonylphenol, ethoxylated |
| | Deer Park, TX | 1,2-Dichloroethane<br>Tetrachloroethane<br>Trichloroethene |
| | Harrison, NJ | Tallow acids, sodium salt |
| Dixie Chemical Co. | Bayport, TX | 2,2'-[1,2-Ethanediylbis(oxy)] bisethanol<br>2,2'-Oxybisethanol |
| Dow Badische Co. | Freeport, TX | Butanol<br>1-Butanol<br>Cyclohexanol<br>Cyclohexanone<br>2-Ethyl-1-hexanol<br>Hexahydro-2H-azepin-2-one<br>2-Methylpropanol<br>2-Methyl-1-propanol<br>2-Propenenitrile<br>2-Propenoic acid, butyl ester<br>2-Propenoic acid, ethyl ester |
| Dow Chemical USA | Bay City, MI | Benzene<br>1,1'-Biphenyl<br>1,3-Butadiene<br>Ethene<br>1-Propene |

| Producer | Plant Location | Chemicals Produced |
|---|---|---|
| | Freeport, TX | 2-Aminoethanol<br>Benzene<br>1,1'-Biphenyl<br>1,3-Butadiene<br>Carbonic dichloride<br>Chloroethane<br>Chloroethene<br>Chloromethane<br>(Chloromethyl) oxirane<br>3-Chloro-1-propene<br>1,2-Dichloroethane<br>Dichloromethane<br>Dichloropropanol<br>1,3-Diisocyanato-2-(and 4-) methylbenzene<br>2,2'-[1,2-Ethanediylbis(oxy)] bisethanol<br>Ethene<br>Ethylbenzene<br>Ethyne<br>Hydrocyanic acid<br>2,2'-Iminobisethanol<br>2-Methyl-1,3-butadiene<br>4,4'-(1-Methylethylidene) bisphenol<br>Methyloxirane<br>2,2',2"-Nitrilotrisethanol<br>Oxirane<br>2,2'-Oxybisethanol<br>1,2-Propanediol<br>1,2,3-Propanetriol<br>1-Propene<br>Tetrachloroethene<br>Tetrachloromethane<br>1,1,1-Trichloroethane<br>Trichloroethene<br>Trichloromethane |
| | Magnolia, AR | 1,2-Dibromoethane |
| | Midland, MI | 2-Aminoethanol<br>2-Butoxyethanol<br>Chlorobenzene, mono-<br>Diethylbenzene<br>Ethenylbenzene<br>2-Ethoxyethanol<br>Ethylbenzene<br>Ethylmethylbenzene |

| Producer | Plant Location | Chemicals Produced |
|---|---|---|
| | | 2,2'-Iminobisethanol<br>2-Methoxyethanol<br>Methylbenzene<br>2,2',2"-Nitrilotrisethanol |
| | Oyster Creek, TX | 1,2-Dichloroethane<br>Phenol<br>2-Propanone |
| | Pittsburg, CA | Tetrachloroethene<br>Tetrachloromethane |
| | Plaquemine, LA | Chloroethene<br>Chloromethane<br>2-Chloro-1-propanol<br>1,2-Dichloroethane<br>Dichloromethane<br>2,2'-[1,2-Ethanediylbis(oxy)] bisethanol<br>Ethene<br>Methyloxirane<br>Oxirane<br>2,2'-Oxybisethanol<br>1,2-Propanediol<br>1-Propene<br>Tetrachloroethene<br>Tetrachloromethane<br>Trichloromethane |
| Dow Corning Corp. | Carrolton, KY | Chloromethane |
| | Midland, MI | Chloromethane<br>Dichlorodimethylsilane |
| E.I. DuPont de Nemours & Co. | Antioch, CA | Dichlorodifluoromethane<br>Tetraethylplumbane<br>Tetramethylplumbane<br>Trichlorofluoromethane |
| | Beaumont, TX | Benzenamine<br>Hydrocyanic acid<br>Methanol<br>Nitrobenzene<br>2-Propenenitrile |
| | Belle, WV | Formaldehyde<br>N-Methylmethanamine<br>Methylamine<br>2-Methyl-2-propenoic acid, methyl ester |

| Producer | Plant Location | Chemicals Produced |
|---|---|---|
| | Cape Fear, NC | 1,4-Benzenedicarboxylic acid/ 1,4-Benzenedicarboxylic acid, dimethyl ester |
| | Corpus Christi, TX | Tetrachloroethene<br>Tetrachloromethane |
| | Deepwater Point, NJ | Carbonic dichloride<br>Chloroethane<br>Dichlorodifluoromethane<br>Dichlorofluoromethane<br>1,3-Diisocyanato-2-(and 4-) methylbenzene<br>Linear alcohols, sulfated, sodium salt, mixed<br>1-Methyl-2,4-dinitrobenzene<br>Tetraethylplumbane<br>Tetramethylplumbane<br>Trichlorofluoromethane<br>1,1,2-Trichloro-1,2,2-trifluoro-ethane |
| | Gibbstown, NJ | Benzenamine<br>Nitrobenzene |
| | Healing Springs, NC | Formaldehyde |
| | Laplace, LA | 2-Chloro-1,3-butadiene<br>3-Chloro-1-propene<br>Hexanedinitrile<br>2-Hexenedinitrile<br>3-Hexenedinitrile<br>Hydrocyanic acid |
| | La Porte, TX | Acetic acid, ethenyl ester<br>1,4-Butanediol<br>Formaldehyde<br>Methylamine<br>Tetrahydrofuran |
| | Linden, NJ | Formaldehyde |
| | Louisville, KY | Dichlorofluoromethane |
| | Memphis, TN | Hydrocyanic acid<br>2-Hydroxy-2-methylpropanenitrile<br>2-Methyl-2-propenoic acid, methyl ester<br>2-Propenenitrile<br>Sodium cyanide |

| Producer | Plant Location | Chemicals Produced |
|---|---|---|
| | Montage, MI | Dichlorodifluoromethane<br>Trichlorofluoromethane<br>1,1,2-Trichlro-1,2,2-trifluoro-ethane |
| | Old Hickory, TN | 1,4-Benzenedicarboxylic acid/ 1,4-Benzenedicarboxylic acid, dimethyl ester |
| | Orange, TX | Cyclohexanol<br>Cyclohexanone<br>Ethene<br>1,6-Hexanediamine<br>Hexanedinitrile<br>Hexanedioic acid<br>Methanol<br>3-Pentenenitrile<br>1-Propene |
| | Toledo, OH | Formaldehyde |
| | Victoria, TX | 3-Chloro-1-propene<br>Cyclohexane, oxidized<br>Cyclohexanol<br>Cyclohexanone<br>1,4-Dichloro-2-butene<br>1,6-Hexanediamine<br>Hexanedinitrile<br>Hexanedioic acid<br>Hydrocyanic acid |
| Eastman Kodak | Columbia, SC | 1,4-Benzenedicarboxylic acid/ 1,4-Benzenedicarboxylic acid, dimethyl ester |
| | Kingsport, TN | Acetic acid<br>Acetic acid, anhydride<br>Acetic acid, butyl ester<br>Acetic acid, ethyl ester<br>1,2-Benzenedicarboxylic acid, bis (2-ethylhexyl) ester<br>1,4-Benzenedicarboxylic acid/ 1,4-Benzenedicarboxylic acid, dimethyl ester<br>Butanoic acid, anhydride<br>2-Butanol<br>2-Ethoxyethyl acetate<br>4-Methyl-2-pentanone<br>Propanoic acid<br>2-Propanone |

| Producer | Plant Location | Chemicals Produced |
|---|---|---|
| | Longview, TX | Acetaldehyde<br>Acetic acid, ethyl ester<br>Butanol<br>1-Butanol<br>2-Butoxyethanol<br>2,2'-[1,2-Ethanediylbis(oxy)] bisethanol<br>Ethanol<br>Ethene<br>2-Ethoxyethanol<br>2-Ethylhexanal<br>2-Ethyl-1-hexanol<br>2-Methoxyethanol<br>2-Methylpropanol<br>2-Methyl-1-propanol<br>Oxirane<br>2,2'-Oxybisethanol<br>Propanal<br>1-Propene |
| El Paso Natural Gas Co. | Odessa, TX | 1,3-Butadiene<br>Ethylbenzene<br>Ethene<br>Ethenylbenzene<br>Hexanedinitrile<br>1-Propene |
| Emery Industries, Inc. | Mauldin, SC | Linear alcohols, ethoxylated, mixed<br>Nonylphenol, ethoxylated |
| | Santa Fe Springs, CA | Linear alcohols, ethoxylated, mixed<br>Nonylphenol, ethoxylated |
| Emkay Chemical Co. | Elizabeth, NJ | Dodecylbenzenesulfonic acid<br>Dodecylbenzenesulfonic acid, sodium salt |
| Energy Cooperative, Inc. | East Chicago, IN | 1-Nonene<br>1-Propene |
| Enserch Corp. | Kerens, TX | Urea |
| | Pryor, OK | Urea |
| Esmark, Inc. | Beaumont, TX | Urea |

| Producer | Plant Location | Chemicals Produced |
|---|---|---|
| Ethyl Corp. | Baton Rouge, LA | Chloroethane<br>Chloroethene<br>Chloromethane<br>1,2-Dichloroethane<br>Tetrachloroethene<br>Tetraethylplumbane<br>Tetramethylplumbane<br>Trichloroethene |
| | Magnolia, AR<br>Pasadena, TX | 1,2-Dibromoethane<br>1-Butanol<br>Chloroethane<br>1,2-Dichloroethane<br>Octene<br>Tetraethylplumbane<br>Tetramethylplumbane |
| | Rochester, NY | Iodomethane |
| Exxon Corp. | Baton Rouge, LA | Benzene<br>1,2-Benzenedicarboxylic acid, diisodecyl ester<br>1,2-Benzenedicarboxylic acid, diisononyl ester<br>1,3-Butadiene<br>1-Butene<br>Ethene<br>1,3-Isobenzofurandione<br>Isodecanol<br>2-Methyl-1,3-butadiene<br>6-Methyl-heptanol<br>4-Methyl-3-pentene-2-one<br>2-Methyl-1-propene<br>1-Nonene<br>2-Propanol<br>1-Propene |
| | Baytown, TX | Benzene<br>Cyclohexane<br>1,2-Dimethylbenzene<br>1,4-Dimethylbenzene<br>Ethene<br>Methylbenzene<br>2-Methyl-1-propene<br>1-Propene |
| | Bayway, NJ | 2-Butanol<br>2-Butanone<br>1-Butene<br>4-Methyl-2-pentanone |

| Producer | Plant Location | Chemicals Produced |
|---|---|---|
| | | 4-Methyl-3-pentene-2-one<br>2-Methyl-1-propene<br>Nonylphenol<br>Oil-soluble petroleum sulfonate, calcium salt<br>2-Propanone<br>1-Propene |
| FMC Corp. | Bayport, TX | Acetic acid<br>1,2,3-Propanetriol |
| | South Charleston, WV | Carbon disulfide<br>Tetrachloromethane |
| Fairmount Chemicals Co. | Newark, NJ | Iodomethane |
| Farmland Industries, Inc. | Dodge City, KS | Urea |
| | St. Joseph, MO | 6-Chloro-N-ethyl-N'-(1-methyl-ethyl)-1,3,5-triazine-2,4-diamine |
| Ferro Corp. | Santa Fe Springs, CA | Nonylphenol<br>Phenol |
| Fike Chemicals, Inc. | Nitro, WV | 1,2-Ethanediol |
| Finetex, Inc. | Elmwood Park, NJ | Dodecylbenzenesulfonic acid<br>Dodecylbenzenesulfonic acid, sodium salt<br>Nonylphenol, ethoxylated |
| Firestone Tire & Rubber Co. | Orange, TX | 1,3-Butadiene |
| First Mississippi Corp. | Pascagoula, TX | Benzenamine<br>Nitrobenzene |
| GAF Corp. | Calvert City, KY | 1,4-Butanediol<br>2-Butyne-1,4-diol<br>Formaldehyde<br>Linear alcohols, ethoxylated, mixed<br>Methylamine<br>1-Methyl-2-pyrrolidinone |

| Producer | Plant Location | Chemicals Produced |
|---|---|---|
| | | Nonylphenol<br>Nonylphenol, ethoxylated |
| | Linden, NJ | Linear alcohols, ethoxylated, mixed<br>Linear alcohols, ethoxylated and sulfated, sodium salt, mixed<br>Nonylphenol<br>Tetrahydrofuran |
| | Rensselaer, NY | Methylbenzene |
| | Texas City, TX | 1,4-Butanediol<br>2-Butyne-1,4-diol<br>1-Methyl-2-pyrrolidinone |
| General Electric Co. | Mount Vernon, IN | Carbonic dichloride<br>4,4'-(1-Methylethylidene) bisphenol |
| | Selkirk, NY | 2,6-Dimethylphenol |
| | Waterford, NY | Chloromethane |
| Georgia Pacific Corp. | Albany, OR | Formaldehyde |
| | Bellingham, WA | Ethanol |
| | Columbus, OH | Formaldehyde |
| | Coos Bay, OR | Formaldehyde |
| | Crosset, AR | Formaldehyde |
| | Lufkin, TX | Formaldehyde |
| | Plaquemine, LA | Methanol<br>Phenol<br>2-Propanone |
| | Russelville, SC | Formaldehyde |
| | Taylorsville, MS | Formaldehyde |
| | Vienna, GA | Formaldehyde |
| Getty Oil Co. | Clinton, IA | Urea |
| | Delaware City, DE | Heptenes (mixed)<br>Naphthalene<br>1-Nonene<br>Octene<br>1-Propene |
| | El Dorado, KS | Benzene<br>Heptane |

| Producer | Plant Location | Chemicals Produced |
|---|---|---|
| | | Hexane<br>Methylbenzene<br>(1-Methylethyl) benzene<br>Phenol<br>2-Propanone<br>1-Propene |
| | North Haven, CT | Heptane |
| | Springfield, OR | Formaldehyde |
| | Winnfield, LA | Formaldehyde |
| Givaudan Corp. | Clifton, NJ | 1-Nonanol |
| Goodpasture, Inc. | Dimmitt, TX | Urea |
| B.F. Goodrich Co. | Avon Lake, OH | 1,2-Benzenedicarboxylic acid, bis (2-ethylhexyl) ester |
| | Calvert City, KY | Chloroethane<br>1,2-Dichloroethane<br>Ethene<br>1-Propene |
| Goodyear Tire & Rubber Co. | Bayport, TX | 2-Propanone |
| | Beaumont, TX | 2-Methyl-1,3-butadiene |
| W.R. Grace & Co. | Fords, NJ | 1,2-Benzenedicarboxylic acid, bis (2-ethylhexyl) ester<br>1,2-Benzenedicarboxylic acid, diisodecyl ester |
| | Memphis, TN | Urea |
| | Nashau, NH | Sodium Cyanide<br>1,3,5,7-Tetraazatricyclo-[3.3.1.1$^{3,7}$]decane |
| Grain Processing Corp. | Muscatine, IA | Ethanol |
| Great Lakes Chemical Corp. | El Dorado, AR | 1,2-Dibromoethane<br>Tetrabromomethane |
| Grestco Dyes & Chemicals, Inc. | Long Island City, NY | Dodecylbenzenesulfonic acid, sodium salt |
| The Greyhound Corp. | Montgomery, IL | Tallow acids, sodium salt |
| Gulf Coast Olefins Co. | Taft, LA | Ethene<br>1-Propene |

| Producer | Plant Location | Chemicals Produced |
|---|---|---|
| Gulf Oil | Alliance, LA | Benzene<br>Dimethylbenzenes, mixed<br>Methylbenzene |
| | Belle Chase, LA | 1,3-Dimethylbenzene |
| | Blue Island, IL | Dodecylbenzenesulfonic acid<br>Dodecylbenzenesulfonic acid, sodium salt |
| | Cedar Bayou, TX | Ethene<br>Octene<br>1-Propene |
| | Jersey City, NJ | Nonylphenol, ethoxylated |
| | Lyndhurst, NJ | Linear alcohols, ethoxylated, mixed |
| | Philadelphia, PA | Benzene<br>Methylbenzene<br>(1-Methylethyl) benzene<br>1-Propene |
| | Port Arthur, TX | Benzene<br>Cyclohexane<br>Ethene<br>Methylbenzene<br>(1-Methylethyl) benzene<br>1-Propene |
| | St. James, LA | Ethylbenzene<br>Ethenylbenzene |
| | Vicksburg, MS | Formaldehyde |
| Hart Products Corp. | Jersey City, NJ | Dodecylbenzenesulfonic acid, sodium salt |
| Henkel, Inc. | Charlotte, NC | Linear alcohols, ethoxylated and sulfated, sodium salt, mixed |
| | Hawthorne, CA | Dodecylbenzenesulfonic acid<br>Dodecylbenzenesulfonic acid, sodium salt<br>Linear alcohols, ethoxylated and sulfated, sodium salt, mixed<br>Linear alcohols, sulfated, sodium salt, mixed |
| | Hoboken, NJ | Linear alcohols, ethoxylated and sulfated, sodium salt, mixed |

| Producer | Plant Location | Chemicals Produced |
|---|---|---|
| Hercofina | Big Spring, TX | Dimethylbenzenes, mixed |
| | Plaquemine, LA | Methanol |
| | Port Arthur, TX | Dimethylbenzenes, mixed |
| | Wilmington, NC | 1,4-Benzenedicarboxylic acid/ 1,4-Benzenedicarboxylic acid, dimethyl ester |
| Hercor Chemical Corp. | Penuelas, PR | 1,4-Dimethylbenzene |
| Hercules, Inc. | Brunswick, GA | 2,6,6-Trimethylbicyclo [3.1.1]-hept-2-ene |
| | Gibbstown, NJ | |
| | Glen Falls, NY | Hydrocyanic acid |
| | Hattiesburg, MS | 2,6,6-Trimethylbicyclo [3.1.1]-hept-2-ene |
| | Louisiana, MO | 2,2'-Bis (hydroxymethyl)-1,3-propanediol<br>Formaldehyde<br>Urea |
| | Wilmington, NC | Formaldehyde |
| Hoffmann-La Roche Inc. | Belvidere, NJ | D-Glucitol |
| The Humphrey Chemical Co. | North Haven, CT | Hexane<br>Octene |
| | Phillips, TX | Heptane |
| ICC Industries Inc. | Niagara Falls, NY | Chlorobenzene, mono- |
| ICI Americas, Inc. | New Castle, DE | D-Glucitol<br>Nonylphenol, ethoxylated |
| Independent Refining Corp. | Winnie, TX | Benzene |
| Inland Chemical Corp. | Manati, PR | Tetrachloromethane |
| International Minerals & Chemicals | Serpal, PA | 2,2'-Bis (hydroxymethyl)-1,3-propanediol<br>Formaldehyde |

| Producer | Plant Location | Chemicals Produced |
|---|---|---|
| | Sterlington, LA | Formaldehyde<br>Propanoic acid |
| | Terre Haute, IN | Ethanol<br>Methylamine |
| The Andrew Jergens Co. | Cincinnati, OH | Tallow acids, sodium salt |
| Jetco Chemicals, Inc. | Corsicana, TX | (2-Ethylhexyl) amine |
| Jones & Laughlin Industries | Aliquippa, PA | Benzene<br>Dimethylbenzenes, mixed<br>Methylbenzene |
| Kaiser Aluminum & Chemical Corp. | Savannah, GA | Urea |
| Kalama Chemicals | Kalama, WA | Benzoic acid, technical<br>Nonylphenol<br>Phenol |
| Kerr-McGee Corp. | Corpus Christi, TX | Benzene<br>Dimethylbenzenes, mixed<br>Methylbenzene |
| Koppers Co., Inc. | Bridgeville, PA | 2,5-Furandione<br>1,3-Isobenzofurandione |
| | Cicero, IL | 2,5-Furandione<br>1,3-Isobenzofurandione<br>Naphthalene |
| | Follansbee, WV | 2,6-Dimethylphenol<br>Naphthalene<br>Phenol |
| | Fontana | Naphthalene |
| | Woodward, AL | Naphthalene |
| Lachat Chemicals, Inc. | Mequon, WI | 1-Methyl-2-pyrrolidinone |
| Laurel Products Corp. | Philadelphia, PA | Tallow acids, sodium salt |

| Producer | Plant Location | Chemicals Produced |
|---|---|---|
| Lever Brothers Co. | Baltimore, MD | Dodecylbenzenesulfonic acid<br>Dodecylbenzenesulfonic acid, sodium salt<br>Tallow acids, sodium salt |
| | Edgewater, NJ | Dodecylbenzenesulfonic acid<br>Dodecylbenzenesulfonic acid, sodium salt<br>Tallow acids, sodium salt |
| | Hammond, IN | Dodecylbenzenesulfonic acid<br>Dodecylbenzenesulfonic acid, sodium salt<br>Tallow acids, sodium salt |
| | Los Angeles, CA | Dodecylbenzenesulfonic acid<br>Dodecylbenzenesulfonic acid, sodium salt<br>Tallow acids, sodium salt |
| | St. Louis, MO | Dodecylbenzenesulfonic acid<br>Dodecylbenzensulfonic acid, sodium salt<br>Tallow acids, sodium salt |
| Lonza, Inc. | Mapleton, IL | D-Glucitol<br>Hexadecyl chloride |
| Mallinckrodt, Inc. | Lodi, NJ | Acetic acid, magnesium salt<br>1,2-(and 1,3-) Butanediol<br>2,2'-Oxybisethanol |
| Marathon Oil Co. | Detroit, MI | 1-Propene |
| | Texas City, TX | Benzene<br>Dimethylbenzenes, mixed<br>Methylbenzene<br>(1-Methylethyl) benzene<br>1-Propene |
| Marathon Manufacturing Co. | Dickinson, TX | Oil-soluble petroleum sulfonate, sodium salt |
| Melamine Chemicals, Inc. | Donaldsonville, LA | 1,3,5-Triazine-2,4,6-triamine |
| Merck & Co., Inc. | Danville, PA | D-Glucitol |
| Merichem Co. | Houston, TX | Phenol |

| Producer | Plant Location | Chemicals Produced |
|---|---|---|
| Midwest Solvents Co., Inc. | Atchison, KA | Ethanol |
| Milbrew, Inc. | Juneau, WI | Ethanol |
| Miles Laboratories, Inc. | Dayton, OH | 2-Hydroxy-1,2,3-propanetricarboxylic acid |
| | Elkhart, IN | 2-Hydroxy-1,2,3-propanetricarboxylic acid |
| Milliken & Co. | Inman, SC | Nonylphenol, ethoxylated |
| Mineral Research & Development Corp. | Concord, NC | Acetic acid, magnesium salt |
| Minerec Corp. | Baltimore, MD | Carbonic dichloride |
| Mississippi Chemical Corp. | Yazoo City, MS | Urea |
| Mobay Chemical Corp. | Cedar Bayou, TX | Carbonic dichloride<br>1,3-Diisocyanato-2-(and 4-) methylbenzene<br>4-Methyl-1,3-benzenediamine<br>1-Methyl-2,4-dinitrobenzene(and 2-Methyl-1,3-dinitrobenzene) |
| | New Martinsville, WV | Benzenamine<br>Carbonic dichloride<br>1,3-Diisocyanato-2-(and 4-) methylbenzene<br>4-Methyl-1,3-benzenediamine<br>1-Methyl-2,4-dinitrobenzene(and 2-Methyl-1,3-dinitrobenzene)<br>Nitrobenzene |
| Mobil Oil Corp. | Beaumont, TX | Benzene<br>1,3-Butadiene<br>Ethene<br>Methylbenzene<br>2-Methylbutane<br>1-Propene |
| Monochem, Inc. | Geismar, LA | Chloroethene<br>Ethyne |

| Producer | Plant Location | Chemicals Produced |
|---|---|---|
| Monsanto Co. | Addyston, OH | Formaldehyde |
| | Alvin, TX | 1,3-Dimethylbenzene |
| | Anniston, AL | 1,1'-Biphenyl |
| | Bridgeport, NJ | 1,2-Benzenedicarboxylic acid, butyl, phenylmethyl ester<br>1,3-Isobenzofurandione |
| | Chocolate Bayou, TX | Benzene<br>1,3-Butadiene<br>1-Butene<br>1,2-Dimethylbenzene<br>Dodecylbenzene, linear<br>Ethene<br>Ethylbenzene<br>Formaldehyde<br>Hydrocyanic acid<br>Methylbenzene<br>2-Methyl-1,3-butadiene<br>(1-Methylethyl) benzene<br>Naphthalene<br>Phenol<br>2-Propanone<br>1-Propene<br>2-Propenenitrile |
| | Decatur, AL | 1,6-Hexanediamine<br>Hexanedinitrile |
| | Eugene, OR | Formaldehyde |
| | Greenwood, SC | 1,6-Hexanediamine adipate |
| | Kearny, NJ | Nonylphenol<br>Nonylphenol, ethoxylated |
| | Pensacola, FL | Cyclohexanol<br>Cyclohexanone<br>1,6-Hexanediamine<br>1,6-Hexanediamine adipate<br>Hexanedinitrile |
| | Sauget, IL | 1,2-Benzendicarboxylic acid, butyl, phenylmethyl ester<br>Chlorobenzene, mono-<br>Chloromethyl benzene<br>1-Chloro-4-nitrobenzene<br>Nitrobenzene |
| | Springfield, MA | Acetic acid, ethyl ester<br>Formaldehyde |

| Producer | Plant Location | Chemicals Produced |
|---|---|---|
| | St. Louis, MO | 2,5-Furandione |
| | Texas City, TX | Acetic acid<br>1,2-Benzenedicarboxylic acid, bis (2-ethylhexyl) ester<br>1,2-Benzenedicarboxylic acid, di-n-heptyl-n-nonyl-undecyl ester<br>Ethene<br>Ethenylbenzene<br>Ethylbenzene<br>4-Hydroxy-4-methyl-2-pentanone<br>2-Hydroxy-2-methylpropanenitrile<br>1,3-Isobenzofurandione<br>Methanol<br>2-Methyl-1-propene<br>2-Propenenitrile |
| Montrose Chemical Corp. | Henderson, NV | Chlorobenzene, mono- |
| Morton-Norwich Products, Inc. | Greensville, SC | Dodecylbenzenesulfonic acid, sodium salt<br>Linear alcohols, ethoxylated and sulfated, sodium salt, mixed |
| Murro Chemical Co. | Portsmith, VA | Tallow acids, potassium salt<br>Tallow acids, sodium salt |
| N-Ren Corp. | East Dubuque, IA | Urea |
| | Pryor, OK | Urea |
| Nalco Chemical Co. | Freeport, TX | Tetraethylplumbane<br>Tetramethylplumbane |
| National Biochemical Co. | Chicago, IL | Bromoform |
| National Distillers & Chemical Corp. | Tuscola, IL | Ethanol<br>Ethene |
| National Mining & Chemical Co. | Philadelphia, PA | Tallow acids, sodium salt |
| National Starch & Chemical Corp. | Long Mott, TX | Acetic acid, ethenyl ester |
| | Meredosia, IL | Heptenes (mixed) |

| Producer | Plant Location | Chemicals Produced |
|---|---|---|
| | Salisbury, NC | Dodecylbenzenesulfonic acid, sodium salt |
| Nease Chemical Co. | State College, PA | Benzenesulfonic acid |
| Neches Butane Products | Port Neches, TX | 1,3-Butadiene<br>2-Methyl-1,3-butadiene |
| Nipro, Inc. | Augusta, GA | Cyclohexanol<br>Cyclohexanone<br>Cyclohexanone, oxime<br>Hexahydro-2H-azepin-2-one |
| North America Philips Corp. | Kansas City, KS | Linear alcohols, ethoxylated, mixed<br>Nonylphenol, ethoxylated<br>Oil-soluble petroleum sulfonate, calcium salt |
| Northern Nat. Gas Co. | Morris, IL | Ethene<br>Oxirane<br>2,2'-Oxybisethanol<br>1-Propene |
| Northwest Industries | Beaumont, TX | Benzoic acid, technical |
| | Chattanooga, TN | Benzoic acid, technical |
| | Lone Star, TX | Benzene<br>Dimethylbenzenes, mixed<br>Methylbenzene |
| Occidental Petroleum Corp. | Arecibo, PR | 1,3-Isobenzofurandione |
| | North Tonawanda, NY | Formaldehyde<br>1,3,5,7-Tetraazatricyclo-[3.3.1.1$^{3,7}$]decane |
| | Taft, LA | 1,1,2,2-Tetrachloroethane<br>Tetrachloroethene<br>Trichloroethene |
| Olefins/Aromatic | Beaumont, TX | 1,3-Dimethylbenzene |
| Olin Corp. | Ashtabula, OH | 1,3-Diisocyanato-2-(and 4-) methylbenzene |

| Producer | Plant Location | Chemicals Produced |
|---|---|---|
| | Brandenburg, KY | 1-Aminoethanol<br>2-Chloro-1-propanol<br>2,2'-[1,2-Ethanediylbis(oxy)] bisethanol<br>Ethene<br>2,2'-Iminobisethanol<br>4-Methyl-1,3-benzenediamine<br>Methyloxirane<br>2,2',2"-Nitrilotrisethanol<br>Oxirane<br>2,2'-Oxybisethanol<br>1,2-Propanediol |
| | Lake Charles, LA | Carbonic dichloride<br>1,3-Diisocyanato-2-(and 4-) methylbenzene<br>Methylbenzene<br>Urea |
| | Rochester, NY | 4-Methyl-1,3-benzenediamine<br>Tetrabromomethane |
| Original Bradford Soap Works, Inc. | West Warwick, RI | Tallow acids, sodium salt |
| Oxirane Corp. | Bayport, TX | Methyloxirane<br>2-Methyl-2-propanol<br>2-Methyl-2-propenoic acid, methyl ester<br>1,2-Propanediol<br>2-Propanone |
| | Channelview, TX | Ethenylbenzene<br>Ethylbenzene<br>1-Phenylethyl hydroperoxide |
| | Pasadena, TX | Ethanol |
| Oxochem Enterprise | Penuelas, PR | Butanal<br>1-Butanol<br>2-Ethyl-1-hexanol<br>2-Methylpropanal<br>2-Methyl-1-propanol |
| PPG Industries, Inc. | Barberton, OH | Carbonic dichloride |
| | Beaumont, TX | 1,2-Dibromoethane<br>2,2'-[1,2-Ethanediylbis(oxy)] bisethanol |

| Producer | Plant Location | Chemicals Produced |
|---|---|---|
| | | 2-Methoxyethanol<br>Oxirane<br>2,2'-Oxybisethanol<br>Tetraethylpumbane<br>Tetramethylpumbane |
| | Guayanilla, R | 1,2-Dichloroethane<br>2,2'-[1,2-Ethanediylbis(oxy)] bisethanol<br>Ozirane<br>2,2'Oxybisethanol |
| | Lake Charles, LA | Chloroethane<br>1,2,-DIchloroethane<br>Tetrachloroethene<br>1,1,1-Trichloroethane<br>Trichloroethene |
| | Natrium, WV | Carbon disulfide<br>Chlorobenzene, mono- |
| | Ponce, PR | Chloroethene |
| PVO International, Inc. | Boonton, NJ | Nonylphenol, ethoxylated |
| Pennwalt Corp. | Calvert City, KS | Dichlorodifluoromethane<br>Trichlorofluoromethane |
| | Crosby, TX | Ethanol |
| | Genesee, NY | 1-Methyl-1-phenylethyl hydroperoxide |
| | Greens Bayou, TX | Carbonic disulfide |
| | Thorofare, NJ | Dichlorodifluoromethane<br>Trichlorofluoromethane |
| Pennzoil Corp. | Shreveport, LA | Benzene<br>Dimethylbenzenes, mixed<br>Hexane<br>Pentane |
| Perstorp | Toledo, OH | 2,2-Bis (hydroxymethyl)-1,3-propanediol |
| Pester Refining Co. | El Dorado, KS | 1-Propene |
| Pfizer, Inc. | Brooklyn, NY | 2-Hydroxy-1,2,3-propanetricarboxylic acid |

| Producer | Plant Location | Chemicals Produced |
|---|---|---|
| | Greensboro, NC | 1,2-Benzenedicarboxylic acid, bis (2 ethylhexyl) ester<br>1,2-Benzenedicarboxylic acid, diisodecyl ester |
| | Groton, CT | D-Glucitol<br>2-Hydroxy-1,2,3-propanetricarboxylic acid |
| | Southport, NC | 2-Hydroxy-1,2,3-propanetricarboxylic acid |
| | Terre Haute, IN | Benzoic acid, technical |
| Phillips Pacific Chemical Co. | Finley, WA | Urea |
| Phillips Petroleum Co. | Beatrice, NB | Urea |
| | Borger, TX | 1-Butene<br>Cyclohexane |
| | Guayama, PR | Benzene<br>Cyclohexane<br>Dimethylbenzenes, mixed<br>1,2-Dimethylbenzene<br>1,4-Dimethylbenzene<br>Methylbenzene |
| | Phillips, TX | 1,3-Butadiene<br>Ethylbenzene<br>Hexane<br>2-Methyl-2-butene<br>2-Methylpentane<br>Pentane<br>1,2,3,4-Tetrahydrobenzene |
| | Sweeny, TX | Benzene<br>Cyclohexane<br>Ethene<br>Methylbenzene<br>1-Propene |
| Pilot Chemicals | Avenel, NJ | Dodecylbenzenesulfonic acid<br>Dodecylbenzenesulfonic acid, sodium salt<br>Linear alcohols, ethoxylated and sulfated, sodium salt, mixed |
| | Houston, TX | 1,1'-Biphenyl |

| Producer | Plant Location | Chemicals Produced |
|---|---|---|
| | Lockland, OH | Dodecylbenzenesulfonic acid<br>Dodecylbenzenesulfonic acid, sodium salt |
| | Santa Fe Springs, CO | Dodecylbenzenesulfonic acid<br>Dodecylbenzenesulfonic acid, sodium salt<br>Linear alcohols, ethoxylated and sulfated, sodium salt, mixed |
| Plastics Engineering Co. | Sheboygan, WI | 1,3,5,7-Tetraazatricyclo-[3.3.1.1$^{3,7}$]decane |
| Plex Chemical Co. | Union City, CA | Dodecylbenzenesulfonic acid |
| J.L. Prescott Co. | Passaic, NJ | Benzenesulfonic acid, mono-$C_{10-16}$-alkyl derivatives, sodium salts |
| Proctor & Gamble | Alexandria, LA | Benzenesulfonic acid, mono-$C_{10-16}$-alkyl derivatives, sodium salts |
| | Augusta, GA | Benzenesulfonic acid, mono-$C_{10-16}$-alkyl derivatives, sodium salts |
| | Baltimore, MD | Benzenesulfonic acid, mono-$C_{10-16}$-alkyl derivatives, sodium salts |
| | Cincinnati, OH | Benzenesulfonic acid, mono-$C_{10-16}$-alkyl derivatives, sodium salts |
| | Dallas, TX | Benzenesulfonic acid, mono-$C_{10-16}$-alkyl derivatives, sodium salts |
| | Iowa City, IA | Dodecylbenzenesulfonic acid, sodium salt |
| | Ivorydale, OH | Dodecylbenzenesulfonic acid, sodium salt |
| | Kansas City, KS | Benzenesulfonic acid, mono-$C_{10-16}$-alkyl derivatives, sodium salts |
| | Long Beach, CA | Benzenesulfonic acid, mono-$C_{10-16}$-alkyl derivatives, sodium salts |
| | Quincy, MA | Benzenesulfonic acid, mono-$C_{10-16}$-alkyl derivatives, sodium salts |
| | Staten Island, NY | Benzenesulfonic acid, mono-$C_{10-16}$-alkyl derivatives, sodium salts |
| | St. Louis, MO | Benzenesulfonic acid, mono-$C_{10-16}$-alkyl derivatives, sodium salts |

| Producer | Plant Location | Chemicals Produced |
|---|---|---|
| Publicker Industries | Gretna, LA | Ethanol |
| | Philadelphia, PA | Acetaldehyde<br>Acetic acid<br>Acetic acid, butyl ester<br>Acetic acid, ethyl ester<br>Ethanol |
| Puerto Rico Olefins Co. | Penuelas, PR | 1,3-Butadiene<br>Ethene<br>1-Propene |
| Purex Corp. | Bristol, PA | Dodecylbenzenesulfonic acid<br>Dodecylbenzenesulfonic acid, sodium salt<br>Tallow acids, sodium salt |
| | Omaha, MB | Tallow acids, sodium salt |
| | St. Louis, MO | Dodecylbenzenesulfonic acid<br>Dodecylbenzenesulfonic acid, sodium salt |
| | South Gate, CA | Dodecylbenzenesulfonic acid<br>Dodecylbenzenesulfonic acid, sodium salt |
| Quaker Oats Co. | Memphis, TN | Tetrahydrofuran |
| Quintana-Howell | Corpus Christi, TX | Benzene<br>Dimethylbenzenes, mixed<br>Methylbenzene |
| R.S.A. Corp. | Ardsley, NY | Cyclohexanone, oxime<br>1,6-Hexanediamine<br>Iodomethane<br>1,1,2-Trichloroethane |
| Reichhold Chemicals, Inc. | Austin, TX | 1-Methyl-1-phenylethyl hydroperoxide |
| | Bay Minette, AL | 2,6,6-Trimethylbicyclo[ 3.1.1]-hept-2-ene |
| | Carteret, NJ | 1,2-Benzenedicarboxylic acid, bis (2-ethylhexyl) ester<br>1,2-Benzenedicarboxylic acid, diisodecyl ester |

| Producer | Plant Location | Chemicals Produced |
|---|---|---|
| | Charlotte, NC | Acetic acid, ethenyl ester |
| | Elizabeth, NJ | 2,5-Furandione |
| | Hampton, SC | Formaldehyde |
| | Houston, TX | Formaldehyde |
| | Kansas City, KS | Formaldehyde |
| | Malvern, AR | Formaldehyde |
| | Moncure, NC | Formaldehyde |
| | Morris, IL | 2,5-Furandione |
| | Oakdale, LA | 2,6,6-Trimethylbicyclo [3.1.1]-hept-2-ene |
| | Pensacola, FL | 2,6,6-Trimethylbicyclo [3.1.1]-hept-2-ene |
| | St. Helens, OR | Urea |
| | Tacoma, WA | Formaldehyde |
| | Tuscaloosa, AL | Benzenesulfonic acid<br>Formaldehyde<br>Phenol |
| | White City, OR | Formaldehyde |
| The Richardson Co. | Chicago, IL | |
| | Lemont, IL | Dodecylbenzenesulfonic acid, sodium salt<br>Linear alcohols, ethoxylated and sulfated, sodium salt, mixed |
| | Paterson, NJ | Dodecylbenzenesulfonic acid<br>Dodecylbenzenesulfonic acid, sodium salt |
| Richardson-Merrell, Inc. | Phillipsburg, NJ | Acetic acid, magnesium salt |
| Rohm & Haas Co. | Deer Park, TX | Ethyne<br>Hydrocyanic acid<br>2-Hydroxy-2-methylpropanenitrile<br>Methanol<br>2-Methyl-2-propenoic acid, methyl ester<br>Nonylphenol<br>Nonylphenol, ethoxylated |

| Producer | Plant Location | Chemicals Produced |
|---|---|---|
| | | 2-Propenoic acid, butyl ester<br>2-Propenoic acid, ethyl ester |
| | Philadelphia, PA | Linear alcohols, ethoxylated, mixed<br>Nonylphenol |
| Rubicon Chemicals Inc. | Geismar, LA | Benzenamine<br>Carbonic dichloride<br>4-Methyl-1,3-benzenediamine<br>1-Methyl-2,4-dinitrobenzene<br>Nitrobenzene |
| SCM Corp. | Jacksonville, FL | 2,6,6-Trimethylbicyclo [3.1.1]-hept-2-ene |
| SPPC | Corpus Christi, TX | Ethylmethylbenzene |
| Schenectady Chemicals, Inc. | Oyster Creek, TX | Nonylphenol |
| | Rotterdam Junction, NY | Nonylphenol |
| Shell Chemical Co. | Deer Park, TX | Benzene<br>1,3-Butadiene<br>1-Butanol<br>2-Butanol<br>2-Butanone<br>1-Butene<br>Chloroethane<br>Chloroethene<br>Chloromethyloxirane<br>3-Chloro-1-propene<br>1,2-Dichloroethane<br>Dimethylbenzenes, mixed<br>1,2-Dimethylbenzene<br>1,3-Dimethylbenzene<br>1,4-Dimethylbenzene<br>Ethanol<br>Ethene<br>2-Ethyl-1-hexanol<br>4-Hydroxy-4-methyl-2-pentanone<br>Methylbenzene<br>2-Methyl-1,3-butadiene<br>(1-Methylethyl) benzene<br>4,4'-(1-Methylethylidene) bisphenol |

| Producer | Plant Location | Chemicals Produced |
|---|---|---|
| | | 4-Methyl-2-pentanone |
| | | 4-Methyl-3-penten-2-one |
| | | 2-Methyl-1-propanol |
| | | 2-Methyl-1-propene |
| | | Phenol |
| | | 1,2,3-Propanetriol |
| | | 2-Propanol |
| | | 2-Propanone |
| | | 1-Propene |
| | Dominiguez, CA | 4-Hydroxy-4-methyl-2-pentanone |
| | | 4-Methyl-2-pentanone |
| | | 4-Methyl-3-penten-2-one |
| | | 2-Propanol |
| | | 2-Propanone |
| | Geismar, LA | 2-Butoxyethanol |
| | | 2,2'-[1,2-Ethanediylbis(oxy)] bisethanol |
| | | 2-Ethoxyethanol |
| | | Isodecanol |
| | | 2-Methoxyethanol |
| | | Oxirane |
| | | 2,2'-Oxybisethanol |
| | Martinez, CA | 2-Methyl-2-propanol |
| | | 2-Methyl-1-propene |
| | | Oil-soluble petroleum sulfonate, calcium salt |
| | | Oil-soluble petroleum sulfonate, sodium salt |
| | Norco, LA | Acetaldehyde |
| | | 1,3-Butadiene |
| | | 2-Butanol |
| | | 2-Butanone |
| | | 1-Butene |
| | | Chloroethene |
| | | (Chloromethyl) oxirane |
| | | 3-Chloro-1-propene |
| | | 1,2-Dichloroethane |
| | | Ethene |
| | | 2-Methyl-1,3-butadiene |
| | | 1,2,3-Propanetriol |
| | | 2-Propanone |
| | | 1-Propene |
| | Odessa, TX | Benzene |
| | | Methylbenzene |
| | Wilmington, CA | 1-Propene |

| Producer | Plant Location | Chemicals Produced |
|---|---|---|
| | Wood River, IL | Benzene |
| The Shepherd Chemical Co. | Cincinnati, OH | Acetic acid, magnesium salt |
| Simplot Co. | Pocatello, ID | Urea |
| South Hampton Co. | Silsbee, TX | Dimethylbenzenes, mixed<br>2-Methylbutane<br>Pentane |
| Standard Chlorine Chemical Co. | Delaware City, DE | Chlorobenzene, mono- |
| Standard Oil of California | El Segundo, CA | Benzene<br>(1-Methylethyl) benzene<br>1-Propene |
| | Los Angeles, CA | Oil-soluble petroleum sulfonate, calcium salt |
| | Pascagoula, MS | 1,4-Dimethylbenzene |
| | Richmond, CA | 1,2-Dimethylbenzene<br>1,4-Dimethylbenzene<br>Dodecylbenzene, non-linear<br>1,3-Isobenzofurandione<br>2-Methyl-1-propene<br>Phenol<br>2-Propanone<br>1-Propene |
| Standard Oil Co. (Indiana) | Chocolate Bayou, TX | Ethene<br>1-Propene |
| | Decatur, AL | 1,4-Benzenedicarboxylic acid/ 1,4-Benzenedicarboxylic acid, dimethyl ester<br>1,4-Dimethylbenzene |
| | Joliet, IL | 1,3-Benzenedicarboxylic acid<br>1,4-Benzenedicarboxylic acid/ 1,4-Benzenedicarboxylic acid, dimethyl ester<br>1,3-Butadiene<br>2,5-Furandione |
| | Sugar Creek, MO | 2-Methyl-1-propene<br>1-Propene |

| Producer | Plant Location | Chemicals Produced |
|---|---|---|
| | Texas City, TX | Benzene<br>Dimethylbenzenes, mixed<br>1,4-Dimethylbenzene<br>Ethenylbenzene<br>Ethylbenzene<br>Methylbenzene<br>(1-Methylethyl) benzene<br>1-Propene |
| | Wood River, IL | (1-Methylethyl) benzene |
| | Yorktown, VA | Heptenes (mixed)<br>(1-Methylethyl) benzene<br>1-Propene |
| Standard Oil Co. (Ohio) | Lima, OH | Hydrocyanic acid<br>1-Propene<br>2-Propenenitrile<br>Urea |
| Stauffer Chemical Co. | Carson, CA | Chloroethane<br>Chloroethene<br>1,2-Dichloroethane |
| | Cold Creek, AL | Carbonic dichloride |
| | Delaware City, DE | Carbon disulfide |
| | Edison, NJ | (Chloromethyl) benzene |
| | Henderson, NV | Benzenesulfonic acid |
| | Le Moyne, AL | Tetrachloromethane |
| | Louisville, KY | Chloromethane<br>Dichloromethane<br>Tetrachloroethene<br>Tetrachloromethane<br>Trichloromethane |
| | St. Gabriel, LA | Carbonic dichloride |
| St. Croix Petrochemical Corp. | St. Croix, VI | 1,4-Dimethylbenzene |
| The Stepan Chemical Co. | Anaheim, CA | Dodecylbenzenesulfonic acid<br>Dodecylbenzenesulfonic acid, sodium salt<br>Linear alcohols, ethoxylated, mixed<br>Nonylphenol, ethoxylated |

| Producer | Plant Location | Chemicals Produced |
|---|---|---|
| | Bordontown, NJ | Benzenesulfonic acid, mono-$C_{10-16}$-alkyl derivatives, sodium salts |
| | Elwood, IL | Dodecylbenzenesulfonic acid<br>Dodecylbenzenesulfonic acid, sodium salt<br>1,3-Isobenzofurandione<br>Linear alcohols, ethoxylated, mixed<br>Nonylphenol, ethoxylated<br>Oil-soluble petroleum sulfonate, sodium salt |
| | Fieldsboro, NJ | Dodecylbenzenesulfonic acid<br>Dodecylbenzenesulfonic acid, sodium salt<br>Linear alcohols, ethoxylated, mixed<br>Nonylphenol, ethoxylated |
| Sterling Drug, Inc. | Cincinnati, OH | 2,4,6-Trichloro-1,3,5-triazine |
| | Memphis, TN | 2,4,6-Trichloro-1,3,5-triazine |
| Stimson Lumber Co. | Anacortes, WA | Phenol<br>2,6,6-Trimethylbicyclo[ 3.1.1 ]-hept-2-ene |
| Sun Co., Inc. | Corpus Christi, TX | Benzene<br>Dimethylbenzenes, mixed<br>1,2-Dimethylbenzene<br>Ethene<br>Ethenylbenzene<br>Ethylbenzene<br>Methylbenzene<br>(1-Methylethyl) benzene<br>1-Propene |
| | Duncan, OK | 1-Dodecene<br>1-Propene |
| | Marcus Hook, PA | Benzene<br>1-Dodecene<br>Methylbenzene<br>1-Propene |
| | Toledo, OH | Benzene<br>1-Dodecene<br>Methylbenzene<br>1-Propene |

| Producer | Plant Location | Chemicals Producer |
|---|---|---|
| | Tulsa, OK | Benzene<br>Cyclohexane<br>Methylbenzene |
| SunOlin Chemical Co. | Claymont, DE | Ethene<br>Oxirane |
| Sybron Corp. | Lyndhurst, NJ | 1,1'-Biphenyl |
| Teknor Apex Co. | Hebronville, MA | 1,2-Benzenedicarboxylic acid, bis (2-ethylhexyl) ester<br>1,2-Benzenedicarboxylic acid, diisodecyl ester |
| Tenneco, Inc. | Chalmetta, LA | Benzene<br>Dimethylbenzenes, mixed<br>1,2-Dimethylbenzene<br>1,3-Dimethylbenzene<br>1,4-Dimethylbenzene<br>Ethylbenzene<br>Methylbenzene |
| | Elizabeth, NJ | Cyclohexanone, oxime |
| | Fords, NJ | Chloromethyl benzene<br>Formaldehyde<br>2,5-Furandione<br>1,3,5,7-Tetraazatricyclo-[3.3.1.1$^{3,7}$]decane |
| | Garfield, NJ | Benzoic acid, technical<br>Formaldehyde |
| | Houston, TX | 1,3-Butadiene<br>1-Butene<br>2-Methyl-1-propene |
| | Pasadena, TX | Ethyne<br>Methanol |
| Tennessee Valley Authority | Muscle Shoals, AL | Urea |
| Terra Chemicals Internatonal, Inc. | Port Neal, IA | Urea |
| Texaco | Austin, TX | Linear alcohols, ethoxylated, mixed |

| Producer | Plant Location | Chemicals Produced |
|---|---|---|
| | Port Arthur, TX | Benzene<br>Cyclohexane<br>1-Dodecene<br>Methylbenzene<br>1-Propene |
| | Port Neches, TX | 2-Aminoethanol<br>2-Butoxyethanol<br>2,2'- 1,2-Ethanediylbis(oxy) bisethanol<br>Ethene<br>2-Ethoxyethanol<br>2,2'-Iminobisethanol<br>Linear alcohols, ethoxylated, mixed<br>2-Methoxyethanol<br>Methyloxirane<br>2,2',2"-Nitrilotrisethanol<br>Nonylphenol<br>Nonylphenol, ethoxylated<br>Oxirane<br>2,2'-Oxybisethanol<br>1,2-Propanediol<br>1-Propene |
| | Westville, NJ | Benzene<br>Methylbenzene<br>(1-Methylethyl) benzene<br>1-Propene |
| Texas City Refining | Texas City, TX | 1-Propene |
| Tosco Corp. | El Dorado, AR | 1-Propene |
| | Martinez, CA | 1-Propene |
| Triad Chemicals | Donaldsonville, FL | Urea |
| Tyler Corp. | Joplin, MO | Urea |
| U.O.P., Inc. | East Rutherford, NJ | (Chloromethyl) benzene |
| Union Camp Corp. | Jacksonville, FL | 2,6,6-Trimethylbicyclo [3.1.1]-hept-2-ene |

| Producer | Plant Location | Chemicals Produced |
|---|---|---|
| Union Carbide Co. | Ashtabula, OH | Ethyne |
| | Bound Brook, NJ | Phenol<br>2-Propanone |
| | Brownsville, TX | Acetic acid<br>Acetic acid, anhydride<br>Acetic acid, ethyl ester<br>2-Butanone<br>Ethanol |
| | Institute & South Charleston, WV | Acetaldol<br>Acetic acid, butyl ester<br>Acetic acid, ethyl ester<br>2-Butanol<br>Carbonic dichloride<br>Chloromethane<br>Dichlorodifluoromethane<br>1,3-Diisocyanato-2-(and 4-) methylbenzene<br>Dodecylbenzene, linear<br>2-Ethoxyethanol<br>(2-Ethylhexyl) amine<br>4-Hydroxy-4-methyl-2-pentanone<br>Linear alcohols, ethoxylated and sulfated, sodium salt, mixed<br>4-Methyl-1,3-benzenediamine<br>1-Methyl-2,4-dinitrobenzene (and 2-Methyl-1,3-dinitrobenzene)<br>1-Methyl-2,4-dinitrobenzene<br>4-Methyl-2-pentanone<br>4-Methyl-3-penten-2-one<br>Nonylphenol, ethoxylated<br>1,2-Propanediol<br>1-Propanol<br>2-Propanone |
| | Penuelas, PR | 1,3-Butadiene<br>Butanal<br>1-Butanol<br>Dimethylbenzenes, mixed<br>2,2'-[1,2-Ethanediylbis(oxy)] bisethanol<br>Ethene<br>Ethyne<br>(1-Methylethyl) benzene<br>4,4'-(1-Methylethylidene) bisphenol<br>2-Methylpropanal<br>2-Methyl-1-propanol |

| Producer | Plant Location | Chemicals Produced |
|---|---|---|
| | | Oxirane |
| | | 2,2'-Oxybisethanol |
| | | Phenol |
| | | 2-Propanone |
| | | 1-Propene |
| | Seadrift, TX | 1-Aminoethanol |
| | | 1,3-Butadiene |
| | | Butanal |
| | | 2,2'-[1,2-Ethanediylbis(oxy)] bisethanol |
| | | Ethene |
| | | Ethenylbenzene |
| | | Ethylbenzene |
| | | 2-Ethyl-1-hexanol |
| | | Ethyne |
| | | 2,2'-Iminobisethanol |
| | | 2-Methylpropanal |
| | | 2-Methyl-1-propanol |
| | | 2,2',2"-Nitrilotrisethanol |
| | | Oxirane |
| | | 2,2'-Oxybisethanol |
| | | Propanal |
| | | 1-Propene |
| | Sistersville, WV | Dichlorodimethylsilane |
| | Taft, LA | Acetic acid |
| | | Benzene |
| | | 1,3-Butadiene |
| | | Cyclohexanol |
| | | Cyclohexanone |
| | | 1,2-Dichloroethane |
| | | 2,2'-[1,2-Ethanediylbis(oxy)] bisethanol |
| | | Ethyne |
| | | Methanol |
| | | Methylbenzene |
| | | Oxirane |
| | | 2,2'-Oxybisethanol |
| | | 2-Propenoic acid |
| | | 2-Propenoic acid, butyl ester |
| | | 2-Propenoic acid, ethyl ester |
| | Texas City, TX | Acetic acid, butyl ester |
| | | Acetic acid, ethyl ester |
| | | 1,3-Butadiene |
| | | 1,2-Dichloroethane |
| | | Ethanol |
| | | Ethene |

| Producer | Plant Location | Chemicals Produced |
|---|---|---|
| | | Ethyne<br>Linear alcohols, ethoxylated, mixed<br>2-Methylpropanal<br>2-Methyl-1-propanol<br>2,2'-Oxybisethanol<br>Propanal<br>Propanoic acid<br>1-Propanol<br>2-Propanol<br>2-Propanone<br>1-Propene<br>1,1,2-Trichloroethane |
| | Torrance, CA | Ethene<br>1-Propene |
| Union Oil Co. of California | Beaumont, TX | Benzene<br>Cyclohexane<br>Dimethylbenzenes, mixed<br>1-Dodecene<br>Heptane<br>Hexane<br>Methylbenzene<br>1-Nonene<br>1-Propene |
| | Brea, CA | Urea |
| | Kenai, AK | Urea |
| | Lemont, IL | Benzene<br>Dimethylbenzenes, mixed<br>Heptane<br>Hexane<br>Methylbenzene |
| Union Pacific Corp. | Corpus Christi, TX | Benzene<br>Cyclohexane<br>Dimethylbenzenes, mixed<br>Methylbenzene |
| Uniroyal, Inc. | Naugatuck, CT | Nonylphenol<br>1,2,3,4-Tetrahydrobenzene |
| U.S. Industrial Chemicals Co. | Deer Park, TX | Acetic acid, ethenyl ester |
| U.S. Steel Corp. | Cherokee, AL | Urea |

| Producer | Plant Location | Chemicals Produced |
|---|---|---|
| | Clairton, PA | Benzene<br>Dimethylbenzenes, mixed<br>Methylbenzene<br>Naphthalene<br>Phenol |
| | Fairfield, AL | Naphthalene |
| | Gary, IN | Naphthalene |
| | Geneva, UT | Benzene<br>Dimethylbenzenes, mixed<br>Methylbenzene |
| | Haverhill, OH | Isodecanol<br>6-Methyl-heptanol<br>1-Methyl-1-phenylethyl hydroperoxide<br>Phenol<br>2-Propanone |
| | Ironton, OH | 1,1,1-Tribromo-2-methyl-2-propanol |
| | Neville Island, PA | 1,2-Benzenedicarboxylic acid, bis (2-ethylhexyl) ester<br>1,2-Benzenedicarboxylic acid, diisodecyl ester<br>2,5-Furandione<br>1,3-Isobenzofurandione |
| Univar Corp. | Eugene, OR | Formaldehyde |
| Upjohn Co. | La Porte, TX | Carbonic dichloride |
| Valley Nitrogen Producers, Inc. | El Centro, CA | Urea |
| | Helm, CA | Urea |
| | Hercules, CA | Methanol<br>Urea |
| Van De Mark Chemical Co. | Lockport, NY | Carbonic dichloride |
| Vertac, Inc. | Vicksburg, MS | 6-Chloro-N-ethyl-N'-(1-methylethyl)-1,3,5-triazine-2,4-diamine |
| Virginia Chemicals, Inc. | Portsmouth, VA | (2-Ethylhexyl) amine |

| Producer | Plant Location | Chemicals Produced |
|---|---|---|
| Vulcan Materials Co. | Geismar, LA | 1,2-Dichloroethane<br>Dichloromethane<br>Tetrachloroethene<br>Tetrachloromethane<br>1,1,1-Trichloroethane<br>Trichloromethane |
| | Wichita, KS | Dichloromethane<br>Tetrachloroethene<br>Tetrachloromethane<br>Trichloromethane |
| Jim Walter Corp. | Birmingham, AL | Benzenesulfonic acid |
| The Williams Companies | Blytheville, AR | Urea |
| | Donaldsonville, LA | Urea |
| | Verdigris, OK | Urea |
| Witco Chemical Corp. | Carson, CA | Dodecylbenzene, linear<br>Dodecylbenzene, non-linear |
| | Clearing, IL | Dodecylbenzenesulfonic acid<br>Dodecylbenzenesulfonic acid, sodium salt |
| | Gretna, LA | Oil-soluble petroleum sulfonate, calcium salt<br>Oil-soluble petroleum sulfonate, sodium salt |
| | Houston, TX | Dodecylbenzenesulfonic acid<br>Dodecylbenzenesulfonic acid, sodium salt<br>Linear alcohols, ethoxylated, mixed<br>Nonylphenol, ethoxylated |
| | Paterson, NJ | Dodecylbenzenesulfonic acid<br>Dodecylbenzenesulfonic acid, sodium salt |
| | Petrolia, PA | Oil-soluble petroleum sulfonate, calcium salt<br>Oil-soluble petroleum sulfonate, sodium salt |
| | Trainer, PA | Oil-soluble petroleum sulfonate, calcium salt |

| Producer | Plant Location | Chemicals Produced |
|---|---|---|
| | | Oil-soluble petroleum sulfonate, sodium salt |
| Woonsocket Color & Chemicals | Woonsocket, RI | 1,1'-Biphenyl<br>Dodecylbenzenesulfonic acid |
| Wright Chemical Corp. | Acme, NY | Formaldehyde<br>1,3,5,7-Tetraazatricyclo-[3.3.1.1$^{3,7}$]decane |

REFERENCES, APPENDIX H

1. SRI International. 1978 Directory of Chemical Producers, United States of America. Menlo Park, California. 1979.

# APPENDIX I

## SCREENING DATA AND RESULTS

# APPENDIX I
# SCREENING DATA AND RESULTS

This appendix shows the plant, cost, and price data used for each of the 219 chemicals analyzed in the screening. The appendix consists of three elements: an index of the chemicals affected (Table I-1); data and assumptions used in the screening (Section I.1, including Table I-2); and the results of the screening (Section I.2, including Table I-3).

This appendix should be read in conjunction with Section 9.2 of the BID. Section 9.2 provides a more in-depth discussion of the approach and basis for assumptions used in the screening. This appendix, in contrast, is intended to provide a record of the specific data used for each chemical, although some discussion is included for guidance.

The chemicals that will be directly affected by NSPS for distillation are listed in Table I-1. This list is the same as the list in Appendix E, except that it: also contains chemical numbers assigned to each chemical for purposes of the computer screening; includes 10 chemicals not regulated by NSPS for distillation but which are factors in the rolled-through cost methodology; and lists chemicals in a slightly different order than that used in Appendix E. Chemicals have been listed and numbered according to their alphabetical order with respect to Chemical Abstracts Service names, except that several chemicals are listed after urea ammonium nitrate (212) even though alphabetically they precede this position.

Several other characteristics of the list warrant mention. First, no chemicals are designated for numbers 47, 59, 100, 218, 219, 229, 231, and 233. Second, one chemical is given a number in Appendix I in relation to its common name; this is cyclohexene, or 1,2,3,4-tetrahydrobenzene (197). Third, as mentioned earlier, Appendix I lists 10 chemicals not regulated by

TABLE I.1. ORGANIC CHEMICAL INDUSTRY
LIST OF CHEMICAL PRODUCTS INCLUDED IN COMPUTER SCREENING

| Chemical number | Chemical name | Common name |
|---|---|---|
| 1 | Acetaldehyde | - |
| 2 | Acetic acid | - |
| 3 | Acetic acid, anhydride | (1) Acetic anhydride<br>(2) Acetic oxide |
| 4 | Acetic acid, butyl ester | n-Butyl acetate |
| 5 | Acetic acid, ethenyl ester | Vinyl acetate |
| 6 | Acetic acid, ethyl ester | Ethyl acetate |
| 7 | Acetic acid, magnesium salt | Magnesium acetate |
| 8 | Alcohols, C-11 or lower, mixtures | - |
| 9 | Alcohols, C-12 or higher, mixtures | - |
| 10 | 2-Aminoethanol | Ethanolamine |
| 11 | Benzenamine | (1) Aniline<br>(2) Phenylamine |
| 12 | Benzene | Benzol |
| 13 | 1,3-Benzenedicarboxylic acid | Isophthalic acid |
| 14 | 1,4-Benzenedicarboxylic acid | Terephthalic acid |
| 15 | 1,2-Benzenedicarboxylic acid, bis (2-ethylhexyl) ester | (1) Bis (2-ethylhexyl) phthalate<br>(2) Dioctyl phthalate<br>(3) Di (2-ethylhexyl) phthalate |
| 16 | 1,2-Benzenedicarboxylic acid, butyl, phenylmethyl ester | Butylbenzyl phthalate |
| 17 | 1,2-Benzenedicarboxylic acid, di-n-heptyl-n-nonyl undecyl ester | Di-n-heptyl-n-nonyl undecyl phthalate |
| 18 | 1,2-Benzenedicarboxylic acid, diisodecyl ester | Diisodecyl phthalate |
| 19 | 1,2-Benzenedicarboxylic acid, diisononyl ester | Diisononyl phthalate |

TABLE I.1 (Continued). ORGANIC CHEMICAL INDUSTRY
LIST OF CHEMICAL PRODUCTS INCLUDED IN COMPUTER SCREENING

| Chemical number | Chemical name | Common name |
|---|---|---|
| 20 | 1,4-Benzenedicarboxylic acid dimethyl ester | (1) Terephthalic acid, dimethyl ester<br>(2) Dimethylterephthalate<br>(3) DMT |
| 21 | Benzenesulfonic acid | - |
| 22 | Benzenesulfonic acid, mono-$C_{10-16}$-alkyl derivatives, sodium salts | - |
| 23 | Benzoic acid, technical | - |
| 24 | 1,1'-Biphenyl | Diphenyl |
| 25 | 2,2-Bis(hydroxymethyl)-1,3-propanediol | Pentaerythritol |
| 26 | 1,3-Butadiene | (1) Bivinyl<br>(2) Divinyl |
| 27 | Butadiene and butene fractions | |
| 28 | Butanal | Butyraldehyde |
| 29 | Butane | n-Butane |
| 30 | Butanes, mixed | - |
| 31 | 1,2-(and 1,3-) Butanediol | Butylene glycol |
| 32 | 1,4-Butanediol | - |
| 33 | Butanoic acid, anhydride | Butyric anhydride |
| 34 | 1-Butanol | n-Butyl alcohol |
| 35 | 2-Butanol | sec-Butyl alcohol |
| 36 | 2-Butanone | Methyl ethyl ketone |
| 37 | 1-Butene | α-Butylene |
| 38 | 2-Butene | (1) β-Butylene<br>(2) pseudo-Butylene |

TABLE I.1 (Continued). ORGANIC CHEMICAL INDUSTRY
LIST OF CHEMICAL PRODUCTS INCLUDED IN COMPUTER SCREENING

| Chemical number | Chemical name | Common name |
|---|---|---|
| 39 | Butenes, mixed | Butylenes (mixed) |
| 40 | 2-Butoxyethanol | Butyl Cellosolve® |
| 41 | 2-Butyne-1,4-diol | - |
| 42 | Carbamic acid, monoammonium salt | - |
| 43 | Carbon disulfide | - |
| 44 | Carbonic dichloride | Phosgene |
| 45 | Chlorobenzene, mono- | - |
| 46 | 2-Chloro-1,3-butadiene | Chloroprene |
| 48 | Chloroethane | Ethyl chloride |
| 49 | Chloroethene | Vinyl chloride |
| 50 | 6-Chloro-N-ethyl-N'-(1-methylethyl)-1,3,5-triazine-2,4-diamine | (1) 2-Chloro-4-(ethylamino)-6-(isopropylamino)-s-triazine<br>(2) Atrazine® |
| 51 | Chloromethane | Methyl chloride |
| 52 | (Chloromethyl) benzene | (1) Benzyl chloride<br>(2) α-Chlorotoluene |
| 53 | (Chloromethyl) oxirane | Epichlorohydrin |
| 54 | 1-Chloro-4-nitrobenzene | (1) p-Chloronitrobenzene<br>(2) p-Nitrochlorobenzene |
| 55 | 2-Chloro-1-propanol | (1) 2-Chloropropyl alcohol<br>(2) Propylene chlorohydrin |
| 56 | 3-Chloro-1-propene | (1) 3-Chloropropene<br>(2) Allyl chloride |
| 57 | Coconut oil acids, sodium salt | - |
| 58 | Cyclohexane | Hexahydrobenzene |
| 60 | Cyclohexane, oxidized | - |

TABLE I.1 (Continued). ORGANIC CHEMICAL INDUSTRY
LIST OF CHEMICAL PRODUCTS INCLUDED IN COMPUTER SCREENING

| Chemical number | Chemical name | Common name |
|---|---|---|
| 61 | Cyclohexanol | (1) Hexalin<br>(2) Hexahydrophenol |
| 62 | Cyclohexanone | Pimelic ketone |
| 63 | Cyclohexanone oxime | - |
| 64 | 1,3-Cyclopentadiene | - |
| 65 | Cyclopropane | Trimethylene |
| 66 | 1,2-Dibromoethane | (1) Ethylene dibromide<br>(2) Ethylene bromide |
| 67 | Dibutanized aromatic concentrate | - |
| 68 | 1,4-Dichloro-2-butene | 1,4-Dichlorobutene |
| 69 | 3,4-Dichloro-1-butene | - |
| 70 | Dichlorodifluoromethane | Freon 12 |
| 71 | Dichlorodimethylsilane | Dimethyldichlorosilane |
| 72 | 1,2-Dichloroethane | (1) Ethylene chloride<br>(2) Ethylene dichloride |
| 73 | 1,1-Dichloroethene | Vinylidene chloride |
| 74 | Dichlorofluoromethane | Freon 21 |
| 75 | Dichloromethane | Methylene chloride |
| 76 | 1,3-Dichloro-2-propanol | Dichlorohydrin |
| 77 | Diethylbenzene | - |
| 78 | 1,3-Diisocyanato-2-(and 4-) methylbenzene (80/20 mixture) | Toluene-2,4-(and 2,6-) diisocyanate (80/20 mixture) |
| 79 | Dimethylbenzenes (mixed) | Xylenes (mixed) |
| 80 | 1,2-Dimethylbenzene | o-Xylene |
| 81 | 1,3-Dimethylbenzene | m-Xylene |

TABLE I.1 (Continued). ORGANIC CHEMICAL INDUSTRY
LIST OF CHEMICAL PRODUCTS INCLUDED IN COMPUTER SCREENING

| Chemical number | Chemical name | Common name |
|---|---|---|
| 82 | 1,4-Dimethylbenzene | p-Xylene |
| 83 | 1,1-Dimethylethyl hydroperoxide | - |
| 84 | 2,6-Dimethylphenol | (1) m-Xylenol<br>(2) 2,6-Xylenol |
| 85 | 1-Dodecene | (1) Dodecene<br>(2) Tetrapropylene |
| 86 | Dodecylbenzene, linear | Alkylbenzene |
| 87 | Dodecylbenzene, nonlinear | - |
| 88 | Dodecylbenzenesulfonic acid | - |
| 89 | Dodecylbenzenesulfonic acid, sodium salt | - |
| 90 | Ethane[a] | (1) Bimethyl<br>(2) Dimethyl |
| 91 | 1,2-Ethanediol | Ethylene glycol |
| 92 | 2,2'-(1,2-Ethanediylbis (oxy)) bisethanol | Triethylene glycol |
| 93 | Ethanol | Ethyl alcohol |
| 94 | Ethene | (1) Ethylene<br>(2) Elayl<br>(3) Olefiant gas |
| 95 | Ethenone | Ketene |
| 96 | Ethenylbenzene | Styrene |
| 97 | 2-Ethoxyethanol | (1) Ethylene glycol monoethyl ether<br>(2) Cellosolve |
| 98 | 2-Ethoxyethyl acetate | (1) Ethylene glycol monoethyl ether acetate<br>(2) Cellosolve acetate® |
| 99 | Ethylbenzene | - |

TABLE I.1 (Continued). ORGANIC CHEMICAL INDUSTRY
LIST OF CHEMICAL PRODUCTS INCLUDED IN COMPUTER SCREENING

| Chemical number | Chemical name | Common name |
|---|---|---|
| 101 | 2-Ethylhexanal | - |
| 102 | 2-Ethyl-1-hexanol | 2-Ethylhexyl alcohol |
| 103 | (2-Ethylhexyl) amine | - |
| 104 | Ethylmethylbenzene | - |
| 105 | 6-Ethyl-1,2,3,4-tetrahydro-9,10-anthracenedione | - |
| 106 | Ethyne | (1) Acetylene<br>(2) Ethine |
| 107 | Fatty acids, tall oil, sodium salt | - |
| 108 | Formaldehyde | (1) Formalin (solution)<br>(2) Methanal (gas) |
| 109 | 2,5-Furandione | Maleic anhydride |
| 110 | D-Glucitol | Sorbitol |
| 111 | Heptane | n-Heptane |
| 112 | Heptenes (mixed) | - |
| 113 | Hexadecyl chloride | - |
| 114 | Hexahydro-2H-azepin-2-one | Caprolactam |
| 115 | Hexane | - |
| 116 | 1,6-Hexanediamine | Hexamethylene diamine |
| 117 | 1,6-Hexanediamine adipate | (1) Hexamethylene diamine adipate<br>(2) Nylon salt |
| 118 | 1,6-Hexanedinitrile | (1) Adiponitrile<br>(2) 1,4-Dicyanobutane |
| 119 | Hexanedioic acid | Adipic acid |
| 120 | 2-Hexenedinitrile | 1,4-Dicyano-1-butene |

TABLE I.1 (Continued). ORGANIC CHEMICAL INDUSTRY
LIST OF CHEMICAL PRODUCTS INCLUDED IN COMPUTER SCREENING

| Chemical number | Chemical name | Common name |
|---|---|---|
| 121 | 3-Hexenedinitrile | (1) 1,4-Dicyanobutene<br>(2) Dihydromuconononitrile<br>(3) 1,4-Dicyano-2-butene |
| 122 | Hydrocyanic acid | Hydrogen cyanide |
| 123 | 4-hydroxy-4-methyl-2-pentanone | Diacetone alcohol |
| 124 | 2-Hydroxy-2-methylpropanenitrile | (1) Acetone cyanohydrin<br>(2) 2-Methyllactonitrile |
| 125 | 2-Hydroxy-1,2,3-propanetricarboxylic acid | Citric acid |
| 126 | 2,2'-Iminobisethanol | (1) Diethanolamine<br>(2) 2,2'-Aminodiethanol |
| 127 | 1,3-Isobenzofurandione | Phthalic anydride |
| 128 | Isodecanol | Isodecyl alcohol |
| 129 | Linear alcohols, ethoxylated, mixed | - |
| 130 | Linear alcohols, ethoxylated and sulfated, sodium salt, mixed | - |
| 131 | Linear alcohols, sulfated, sodium salt, mixed | |
| 132 | Methane[a] | - |
| 133 | Methanol | (1) Methyl alcohol<br>(2) Wood alcohol |
| 134 | 2-Methoxyethanol | (1) Ethylene glycol monomethyl ether<br>(2) Methyl Cellosolve® |
| 135 | Methylbenzene | Toluene |
| 136 | 4-Methyl-1,3-benzenediamine | (1) Toluene-2,4-diamine<br>(2) 2,4-Diaminotoluene<br>(3) 2,4-Tolylenediamine |
| 137 | ar-Methylbenzenediamine | - |
| 138 | 2-Methyl-1,3-butadiene | Isoprene |

TABLE I.1 (Continued). ORGANIC CHEMICAL INDUSTRY
LIST OF CHEMICAL PRODUCTS INCLUDED IN COMPUTER SCREENING

| Chemical number | Chemical name | Common name |
|---|---|---|
| 139 | 2-Methylbutane | Isopentane |
| 140 | 2-Methyl-2-butene | Amylene |
| 141 | 2-Methylbutenes, mixed | Amylenes, mixed |
| 142 | 1-Methyl-2,4-dinitrobenzene (and 2-Methyl-1,3-dinitrobenzene) | 2,4- (and 2,6-) Dinitrotoluene |
| 143 | 1-Methyl-2,4-dinitrobenzene | 2,4-Dinitrotoluene |
| 144 | (1-Methylethyl) benzene | Cumene |
| 145 | 4,4'-(1-Methylethylidene) bisphenol | (1) 4,4'-Isopropylidenediphenol<br>(2) Bisphenol A |
| 146 | Methyloxirane | Propylene oxide |
| 147 | 2-Methylpentane | - |
| 148 | 4-Methyl-2-pentanone | (1) Isopropyl acetone<br>(2) Methyl Isobutyl ketone |
| 149 | 1-Methyl-1-phenylethyl hydroperoxide | Cumene hydroperoxide |
| 150 | 2-Methylpropanal | (1) Isobutyraldehyde<br>(2) Isobutylaldehyde |
| 151 | 2-Methylpropane | Isobutane |
| 152 | 2-Methyl-1-propanol | Isobutyl alcohol |
| 153 | 2-Methyl-2-propanol | (1) tert-Butyl alcohol<br>(2) t-Butanol |
| 154 | 2-Methyl-1-propene | (1) Isobutylene<br>(2) 2-Methylpropene |
| 155 | 2-Methyl-2-propenenitrile | Methacrylonitrile |
| 156 | 2-Methyl-2-propenoic acid, methyl ester | (1) Methacrylic acid methyl ester<br>(2) Methyl methacrylate |
| 157 | 1-Methyl-2-pyrrolidinone | 1-Methyl-2-pyrrolidone |

TABLE I.1 (Continued). ORGANIC CHEMICAL INDUSTRY
LIST OF CHEMICAL PRODUCTS INCLUDED IN COMPUTER SCREENING

| Chemical number | Chemical name | Common name |
|---|---|---|
| 158 | Naphthalene | (1) Naphthene<br>(2) Naphthalin |
| 159 | 2,2',2"-Nitrilotrisethanol | (1) Triethanolamine<br>(2) Triethylolamine |
| 160 | Nitrobenzene | Nitrobenzol |
| 161 | 1-Nonanol | (1) n-Nonanol<br>(2) Nonyl alcohol |
| 162 | 1-Nonene | Tripropylene |
| 163 | Nonylphenol | - |
| 164 | Nonylphenol, ethoxylated | - |
| 165 | Octene | - |
| 166 | Oil-soluble petroleum sulfonate, calcium salt | - |
| 167 | Oil-soluble petroleum sulfonate, sodium salt | - |
| 168 | Oxirane | Ethylene oxide |
| 169 | 2,2'-Oxybisethanol | Diethylene glycol |
| 170 | Pentane | n-Pentane |
| 171 | 3-Pentenenitrile | - |
| 172 | Pentenes, mixed | - |
| 173 | Phenol | (1) Carbolic acid<br>(2) Hydroxybenzene |
| 174 | 1-Phenylethyl hydroperoxide | - |
| 175 | Propanal | Propionaldehyde |
| 176 | Propane | Dimethyl methane |
| 177 | 1,2-Propanediol | Propylene glycol |

TABLE I.1 (Continued). ORGANIC CHEMICAL INDUSTRY
LIST OF CHEMICAL PRODUCTS INCLUDED IN COMPUTER SCREENING

| Chemical number | Chemical name | Common name |
|---|---|---|
| 178 | Propanenitrile | (1) Propionitrile<br>(2) Ethyl cyanide |
| 179 | 1,2,3-Propanetriol | (1) Glycerol<br>(2) Glyceryl<br>(3) Glycerin |
| 180 | Propanoic acid | Propionic acid |
| 181 | 1-Propanol | Propyl alcohol |
| 182 | 2-Propanol | Isopropyl alcohol |
| 183 | 2-Propanone | (1) Acetone<br>(2) Dimethyl ketone |
| 184 | 1-Propene | Propylene |
| 185 | 2-Propenenitrile | Acrylonitrile |
| 186 | 2-Propenoic acid | Acrylic acid |
| 187 | 2-Propenoic acid, butyl ester | Butyl acrylate |
| 188 | 2-Propenoic acid, ethyl ester | Ethyl acrylate |
| 189 | Propylbenzene | Phenylpropane |
| 190 | Sodium cyanide | Cyanogran |
| 191 | Tallow acids, potassium salt | - |
| 192 | Tallow acids, sodium salt | - |
| 193 | Tetrabromomethane | Carbontetrabromide |
| 194 | Tetrachloroethene | (1) Tetrachloroethylene<br>(2) Perchloroethylene |
| 195 | Tetrachloromethane | Carbon tetrachloride |
| 196 | Tetraethylplumbane | Tetraethyl lead |
| 197 | 1,2,3,4-Tetrahydrobenzene | Cyclohexene |
| 198 | Tetrahydrofuran | THF |

TABLE I.1 (Continued). ORGANIC CHEMICAL INDUSTRY
LIST OF CHEMICAL PRODUCTS INCLUDED IN COMPUTER SCREENING

| Chemical number | Chemical name | Common name |
|---|---|---|
| 199 | Tetra (methyl-ethyl) plumbane | Tetra (methyl-ethyl) lead |
| 200 | Tetramethylplumbane | Tetramethyl lead |
| 201 | 1,3,5-Triazine-2,4,6-triamine | (1) Melamine<br>(2) 2,4,6-Triamino-s-triazine |
| 202 | 1,1,1-Tribromo-2-methyl-2-propanol | (1) Tribromo-t-butyl alcohol<br>(2) Acetone-bromoform<br>(3) Brometone |
| 203 | 1,1,1-Trichloroethane | Methyl chloroform |
| 204 | 1,1,2-Trichloroethane | Vinyl trichloride |
| 205 | Trichloroethene | Trichloroethylene |
| 206 | Trichlorofluoromethane | (1) Freon 11<br>(2) Fluorotrichloromethane |
| 207 | Trichloromethane | Chloroform |
| 208 | 2,4,6-Trichloro-1,3,5-triazine | (1) Cyanuric chloride<br>(2) 2,4,6-Trichloro-s-triazine |
| 209 | 1,1,2-Trichloro-1,2,2-trifluoroethane | (1) Trichlorotrifluoroethane<br>(2) Fluorocarbon 113 |
| 210 | 2,6,6-Trimethylbicyclo-[3.1.1]hept-2-ene | α-Pinene |
| 211 | Urea | (1) Carbamide<br>(2) Carbonyldiamide |
| 212 | Urea ammonium nitrate | - |
| 213 | 3-Hydroxybutyraldehyde | (1) Aldol<br>(2) Acetaldol |
| 214 | 2-Butenal | (1) Crotonaldehyde<br>(2) β-Methylacrolein |
| 215 | 2-Butenoic acid | Crotonic acid |

TABLE I.1 (Continued). ORGANIC CHEMICAL INDUSTRY
LIST OF CHEMICAL PRODUCTS INCLUDED IN COMPUTER SCREENING

| Chemical number | Chemical name | Common name |
|---|---|---|
| 216 | 1,3,5,7-Tetraazatricyclo-[3.3.1.1$^{3,7}$]decane | (1) Hexamine<br>(2) Hexamethylene tetraamine |
| 217 | 6-Methyl heptanol | (1) Isooctyl alcohol<br>(2) Isooctanol |
| 220 | Methanamine | Methylamine |
| 221 | N-Methylmethanamine | Dimethylamine |
| 222 | 4-Methyl-3-penten-2-one | Mesityl oxide |
| 223 | Benzotrichloride[a] | - |
| 224 | 1-Bromobutane[a] | - |
| 225 | 2-Chloroethanol[a] | - |
| 226 | Ethanamine[a] | - |
| 227 | Ethyl-Δ-nonylate[a] | - |
| 228 | Ethylsulfate[a] | - |
| 230 | Isononanol[a] | - |
| 232 | Propiolacetone[a] | - |
| 234 | Tribromomethane | Bromoform |
| 235 | 1,1,2,2-Tetrachloroethane | - |
| 236 | Iodomethane | Methyl iodide |
| 237 | Methyl t-butyl ether | MTBE |

[a]Intermediate chemicals, not directly affected by the standards.

NSPS for distillation. These 10 chemicals are: ethane (90); methane (132); benzotrichloride (223); 1-bromobutane (224); 2-chloroethanol (225); ethanamine (226); ethyl-Δ-nonylate (227); ethylsulfate (228); isononanol (230); and propiolacetone (232). The last eight chemicals are intermediates along the chain of production processes between regulated chemicals and, accordingly, are given numbers for the screening program even though they are not regulated, since they serve as inputs and carriers of control costs.

## I.1 SCREENING DATA AND ASSUMPTIONS

The data and assumptions used in the screening are presented in Table I-2 for each chemical and production process. Each line illustrates a different chemical or production process. The basis for the figures on each chemical is shown in Tables 9-6 through 9-19 in Section 9.2 of the BID.[1,2,3]

The mechanics of the rolled-through cost methodology are summarized in Section 9.2.2.2 and are explained further in Documentation of the NSPS SOCMI MAXCOST Model.[4] The program calculates the cost of direct controls at a chemical plant plus control costs for input chemicals (rolled-through costs) produced prior to each chemical; this is done for each process route, or combination of process routes, and the screening program uses the highest-cost production route to calculate the maximum potential price increase for each chemical.

Several letter codes signify the contents of each column in Table I-2. These codes can be explained as follows:

A Chemical number. Each chemical has a number. The numbers are identified in Table I-1.

B Cost code. Each chemical is assigned a control cost on the basis of its classification, as follows. Code 0 indicates a chemical is produced primarily in refineries, which are assumed to control VOC emissions even in the absence of NSPS for distillation. Hence, Code 0 chemicals are assigned no control costs. In addition to refinery chemicals, five detergent and surfactant chemicals are assigned Code 0 and are assumed to have no control costs on the basis of the assumption that future plants will not use distillation.

Code 1 indicates that production of a chemical involves a halogen or sulfur and that controlling emissions would require a scrubber to avoid damage from corrosive airborne compounds. Chemicals with Code 1 are assigned the highest control costs, $1,160,900 (annualized). Code 2 indicates that a chemical is assumed not to need a scrubber and is assigned a standard control cost of $356,000.

As explained in Section 9.2, after chemicals were analyzed initially with Codes 0, 1, and 2, a further code was used for some chemicals. Code 3 is assigned where chemicals warranted refined assumptions concerning factors such as number of distillation columns or flow rates, resulting in lower estimated control costs. Control costs under Code 3 typically range from $140,000 to $300,000, with higher amounts in a few cases. The specific control costs in each instance are shown in Column J for chemicals with Code 3.

C Priority code. The computer program calculates the rolled-through costs of chemicals through a series of calculations in which control costs are calculated first for input chemicals and subsequently for derivative chemicals on the list. Priority codes are assigned to each chemical (and, in some cases, chemical production process) to instruct the program to calculate costs in an order that follows the chain of production among chemicals. The first priority is Code 01, the second is 02, and so on. Priority codes are simply instructions to the program for its relative timing of calculations and do not inherently indicate plant characteristics or importance.

D Number of processes using distillation.

E Number of chemicals used as inputs to produce a chemical.

F Input chemicals, identified by chemical number.

G Proportions of input chemicals used to produce a chemical (kg of input chemical per kg of a given chemical product).

Columns F and G are repeated in the middle space on the printout if more than one chemical input is used.

H Percentage of industry production using a given process.

I Chemical price (cents/kg) in 1987, expressed in 1978 dollars.

J Annualized control costs (1978 dollars) before taxes. Where a blank occurs, refer to Column B for the annualized cost code. Figures appear in Column J only when chemicals have been assigned Code 3.

K Size of an average plant producing a chemical. Expressed in Gg of annual production. Assumptions are explained in Section

9.2.3. An asterisk indicates that the minimum national production level of 45.4 Gg was used in calculating average plant size, after being divided by the actual or estimated number of plants producing the chemical. A # indicates that the plant size is assumed to be 45.4 Gg. Tables 9-6 through 9-19 present chemical-specific data on production in the base year (1978) and the number of plants.

Price quotations are not available for a number of chemicals. The threshold approach (described in Section 9.2) is used for the following 33 chemicals and indicates that none of them would have price increases of 5 percent or more: 22, 33, 42, 55, 63, 65, 68, 69, 76, 83, 101, 104, 105, 118, 120, 121, 124, 129, 137, 149, 155, 161, 171, 174, 178, 189, 193, 197, 202, 208, 213, 214, and 236.

One refinery chemical (147) does not have price data, but is assumed not to have control costs on the assumption that refineries would control VOC emissions even in the absence of NSPS for distillation. Six detergent and surfactant chemicals are assumed not to have control costs because future plants are not expected to use distillation; these are: benzenesulfonic acid, mono-$C_{10-16}$-alkyl derivatives, sodium salts (22); dodecylbenzenesulfonic acid (88); dodecylbenzenesulfonic acid, sodium salt (89); linear alcohols, ethoxylated, mixed (129); linear alcohols, ethoxylated and sulfated, sodium salt, mixed (130); and nonylphenol, ethoxylated (164).

Among refinery chemicals, in particular, there are a number of blanks in Table I-2. The blanks do not limit the analysis because refinery chemicals are not assigned control costs on the assumption that refineries will adopt VOC controls even in the absence of NSPS for distillation and, therefore, a price analysis is not necessary. There also are blanks for some data involving the 10 chemicals listed in the program but not regulated by NSPS; rolled-through control costs are counted on a per kg basis for these chemicals, but aggregate plant data are not needed.

## I.2 SCREENING RESULTS

The results of the screening analysis for each chemical are presented in Table I-3. The key below explains each column.

A Chemical number. Each number represents a particular chemical.

B Chemical price (¢/kg) in 1987, expressed in 1978-value dollars.

C Annualized control costs (¢/kg) incurred directly in the production of a given chemical, rounded to the nearest tenth of a cent.

D All annualized control costs (¢/kg) incurred in the production of a given chemical, including both direct control costs and rolled-through control costs incurred in the production of input chemicals (weighted in proportion to the extent inputs are used), rounded to the nearest tenth of a cent.

E Increase (percent) in the 1987 chemical price if all annualized control costs were passed through by producers, rounded to the nearest hundredth of a percentage point.

F Flag. F signifies a chemical is a refinery chemical. (Chemicals 39 and 162 are also reinfery chemicals but are not flagged with an F.) @ signifies that no price is available for a chemical and, instead, a threshold price is calculated (equal to the annualized control cost times the reciprocal of 5 percent).

G Index number of chemicals.

H Threshold price. Calculated as explained in F. Indicates a point which, if exceeded by the prices of input chemicals weighted by their proportion of use, signifies a chemical would not fail the 5 percent price increase screening criterion.

TABLE I-2. SCREENING DATA AND ASSUMPTIONS

| A | B | C | D | E | F | G | | | | | H | I | J | K | |
|---|---|---|---|---|---|---|---|---|---|---|---|---|---|---|---|
| 001 | 3 | 03 | 03 | 01 | 094 | 00.67 | | | | | 43 | 104.0 | 449000 | 108.0 | |
| 001 | 3 | 03 | 03 | 01 | 093 | 01.15 | | | | | 31 | 104.0 | 449000 | 108.0 | |
| 001 | 3 | 03 | 03 | 01 | 029 | 01.10 | | | | | 25 | 104.0 | 449000 | 108.0 | |
| 002 | 3 | 04 | 03 | 01 | 001 | 01.10 | | | | | 06 | 082.0 | 199000 | 125.9 | |
| 002 | 3 | 04 | 03 | 01 | 133 | 00.53 | | | | | 50 | 082.0 | 199000 | 125.9 | |
| 002 | 3 | 04 | 03 | 01 | 029 | 00.97 | | | | | 44 | 082.0 | 164000 | 125.9 | |
| 003 | 3 | 05 | 01 | 01 | 002 | 01.35 | | | | | 100 | 131.0 | 140900 | 98.3 | |
| 004 | 3 | 08 | 01 | 02 | 034 | 00.71 | 002 | 00.55 | | | 100 | 141.0 | 136000 | 11.0 | |
| 005 | 3 | 05 | 02 | 02 | 094 | 00.35 | 002 | 00.71 | | | 092 | 99.0 | 147900 | 109.6 | |
| 005 | 3 | 05 | 02 | 02 | 106 | 00.33 | 002 | 00.71 | | | 008 | 99.0 | 147900 | 109.6 | |
| 006 | 3 | 05 | 01 | 02 | 093 | 00.62 | 002 | 00.69 | | | 100 | 104.0 | 137900 | 10.4 | |
| 007 | 2 | 05 | 01 | 01 | 002 | 01.20 | | | | | 100 | 717.0 | | 011.4 | * |
| 008 | 3 | 02 | 03 | 01 | 094 | 01.18 | | | | | 33 | 181.0 | 253000 | 23.6 | |
| 008 | 3 | 02 | 03 | 01 | 112 | 01.10 | | | | | 33 | 181.0 | 253000 | 23.6 | |
| 008 | 3 | 02 | 03 | 01 | 111 | 01.20 | | | | | 33 | 181.0 | 253000 | 23.6 | |
| 009 | 3 | 02 | 01 | 01 | 094 | 01.29 | | | | | 100 | 159.0 | 280600 | 23.6 | |
| 010 | 2 | 03 | 01 | 01 | 168 | 00.75 | | | | | 100 | 176.0 | | 012.0 | |
| 011 | 3 | 03 | 01 | 01 | 160 | 1.39 | | | | | 100 | 122.0 | 157300 | 039.3 | |
| 012 | 0 | 01 | | | | | | | | | | 55.0 | | 88.2 | |
| 013 | 2 | 02 | 01 | 01 | 081 | 0.91 | | | | | 100 | 161.0 | | 045.0 | |
| 014 | 2 | 02 | 01 | 01 | 082 | 0.68 | | | | | 100 | 112.0 | | 306.0 | |
| 015 | 3 | 04 | 01 | 02 | 127 | 0.42 | 097 | 00.74 | | | 100 | 169.0 | 175100 | 017.7 | |
| 016 | 3 | 08 | 01 | 03 | 127 | 0.53 | 034 | 00.26 | 052 | 0.45 | 100 | 203.0 | 495500 | 022.7 | * |
| 017 | 2 | 03 | 01 | 02 | 127 | 0.29 | 9 | 1.18 | | | 100 | 171.0 | | 045.4 | * |
| 018 | 2 | 03 | 01 | 02 | 127 | 00.37 | 128 | 00.79 | | | 100 | 154.0 | | 011.7 | |
| 019 | 2 | 03 | 01 | 02 | 127 | .39 | 230 | .77 | | | 100 | 154.0 | | 45.4 | * |
| 020 | 2 | 03 | 02 | 02 | 014 | .87 | 133 | 00.34 | | | 51 | 112.0 | | 310.5 | |
| 020 | 2 | 03 | 02 | 02 | 82 | .67 | 133 | 00.40 | | | 49 | 112.0 | | 310.5 | |
| 021 | 3 | 02 | 02 | 01 | 12 | .49 | | | | | 50 | 179.0 | 298400 | 009.1 | * |
| 021 | 3 | 02 | 02 | 01 | 12 | .71 | | | | | 50 | 179.0 | 298400 | 009.1 | * |
| 022 | 0 | 03 | 01 | 01 | 87 | .97 | | | | | 100 | | | | # |
| 023 | 3 | 02 | 02 | 01 | 135 | .93 | | | | | 75 | 131.0 | 266200 | 9.1 | * |
| 023 | 3 | 03 | 02 | 01 | 223 | 1.79 | | | | | 25 | 131.0 | 266200 | 9.1 | * |
| 024 | 3 | 02 | 01 | 01 | 12 | 1.45 | | | | | 100 | 131.0 | 144300 | 5.7 | * |
| 025 | 3 | 04 | 01 | 02 | 108 | 3.18 | 001 | 00.38 | | | 100 | 236.0 | 280600 | 13.8 | |
| 026 | 2 | 02 | 02 | 01 | 29 | 1.93 | | | | | 20 | 107.0 | | 79.7 | |
| 026 | 2 | 02 | 02 | 01 | 39 | 1.35 | | | | | 80 | 107.0 | | 79.7 | |
| 027 | 0 | 01 | | | | | | | | | | 107.0 | | 21.9 | |
| 028 | 3 | 06 | 02 | 01 | 184 | 0.75 | | | | | 50 | 99.0 | 149000 | 59.2 | |
| 029 | 0 | 01 | | | | | | | | | | 27.0 | | 44.5 | |
| 030 | 0 | 01 | | | | | | | | | | 37.0 | | | # |
| 031 | 3 | 05 | 01 | 01 | 213 | 1.59 | | | | | | 223.0 | 155400 | 022.7 | * |
| 032 | 3 | 05 | 01 | 01 | 41 | 1.19 | | | | | 100 | 241.0 | 155400 | 31.8 | |
| 033 | 3 | 07 | 01 | 01 | 215 | 1.55 | | | | | 100 | | 184700 | 045.4 | * |
| 034 | 3 | 07 | 02 | 01 | 28 | 1.03 | | | | | 66 | 92.0 | 155000 | 038.1 | |
| 035 | 1 | 02 | 01 | 01 | 37 | .90 | | | | | 100 | 126.0 | | 47.3 | |
| 036 | 3 | 03 | 02 | 01 | 35 | 1.18 | | | | | 65 | 104.0 | 136500 | 042.9 | |
| 036 | 3 | 03 | 02 | 01 | 29 | 0.12 | | | | | 35 | 104.0 | 136500 | 042.9 | |

TABLE I-2. SCREENING DATA AND ASSUMPTIONS (CONTINUED)

| A | B | C | D | E | F | G | | | H | I | J | K | |
|---|---|---|---|---|---|---|---|---|---|---|---|---|---|
| 037 | 0 | 01 | 00 | 00 | | | | | 100 | 102.0 | | 53.6 | |
| 038 | 0 | 01 | 00 | 00 | | | | | 100 | 67.0 | | 389.0 | |
| 039 | 0 | 02 | 01 | 01 | | | | | 100 | 40.0 | | 176.0 | |
| 040 | 3 | 08 | 01 | 02 | 168 | .59 | 34 | .90 | 100 | 164.0 | 278300 | 021.5 | |
| 041 | 2 | 04 | 01 | 02 | 106 | 00.43 | 108 | 1.00 | 100 | 508.0 | | 022.7 | * |
| 042 | 3 | 01 | | | | | | | 100 | | 152200 | 45.4 | * |
| 043 | 3 | 02 | 01 | 01 | 132 | 00.25 | | | 100 | 60.0 | 215000 | 043.2 | |
| 044 | 3 | 01 | 00 | 00 | | | | | 100 | 184.0 | 577800 | 34.6 | |
| 045 | 3 | 02 | 01 | 01 | 012 | 00.95 | | | 100 | 122.0 | 304000 | 022.3 | |
| 046 | 1 | 03 | 01 | 01 | 026 | 00.87 | | | 100 | 384.0 | | 060.0 | |
| 048 | 3 | 03 | 02 | 01 | 94 | 00.49 | | | 75 | 82.0 | 444000 | 035.0 | |
| 048 | 3 | 03 | 02 | 01 | 93 | 00.75 | | | 25 | 82.0 | 444000 | 035.0 | |
| 049 | 3 | 03 | 02 | 01 | 72 | 01.65 | | | 50 | 72.0 | 312000 | 224.9 | |
| 049 | 3 | 03 | 02 | 01 | 106 | 00.44 | | | 50 | 72.0 | 312000 | 224.9 | |
| 050 | 1 | 04 | 01 | 02 | 208 | 1.22 | 226 | .30 | 100 | 994.0 | | 015.1 | * |
| 051 | 3 | 02 | 01 | 01 | 132 | 00.30 | | | 100 | 104.0 | 267400 | 18.7 | |
| 052 | 3 | 02 | 01 | 01 | 135 | 00.78 | | | 100 | 181.0 | 251200 | 10.0 | |
| 053 | 1 | 02 | 01 | 01 | 184 | 00.76 | | | 100 | 263.0 | | 52.3 | |
| 054 | 1 | 03 | 01 | 01 | 045 | 1.02 | | | 100 | 246.0 | | 45.4 | * |
| 055 | 1 | 03 | 02 | 01 | 184 | .64 | | | 51 | | | 530.0 | |
| 055 | 1 | 03 | 02 | 01 | 056 | 1.16 | | | 49 | | | 530.0 | |
| 056 | 1 | 02 | 01 | 01 | 184 | .79 | | | 100 | 156.0 | | 26.0 | |
| 057 | 3 | 01 | 00 | | | | | | 100 | 59.0 | 152200 | 006.7 | |
| 058 | 3 | 02 | 01 | 01 | 012 | .94 | | | 85 | 62.0 | 142600 | 096.2 | |
| 060 | 2 | 03 | 01 | 01 | 58 | .94 | | | 85 | 193.0 | | 112.4 | |
| 061 | 3 | 04 | 02 | 01 | 58 | 1.20 | | | 85 | 203.0 | 149300 | 63.9 | |
| 061 | 3 | 05 | 02 | 01 | 173 | 1.34 | | | 15 | 203.0 | 149300 | 63.9 | |
| 062 | 3 | 08 | 02 | 01 | 58 | 1.01 | | | 50 | 181.0 | 149300 | 65.9 | |
| 062 | 3 | 08 | 02 | 01 | 173 | 1.01 | | | 50 | 181.0 | 149300 | 65.9 | |
| 063 | 2 | 09 | 02 | 01 | 62 | 1.24 | | | 95 | | | 011.4 | * |
| 063 | 2 | 09 | 02 | 01 | 62 | 1.06 | | | 05 | | | 011.4 | * |
| 064 | 0 | 01 | | | | | | | 100 | | | | # |
| 065 | 3 | 02 | 01 | 01 | 094 | .93 | | | 100 | | 282000 | 045.4 | * |
| 066 | 1 | 02 | 01 | 01 | 094 | .15 | | | 100 | 191.0 | | 026.0 | |
| 067 | 0 | 01 | | | | | | | | 35.0 | | 11.4 | * |
| 068 | 1 | 04 | 02 | 01 | 026 | 1.88 | | | 50 | | | 257.0 | |
| 068 | 1 | 04 | 02 | 01 | 069 | 1.43 | | | 50 | | | 257.0 | |
| 069 | 3 | 03 | 01 | 01 | 026 | 0.94 | | | 100 | | 859300 | 368.0 | |
| 070 | 3 | 04 | 01 | 01 | 195 | 1.60 | | | 100 | 317.0 | 220700 | 014.8 | |
| 071 | 1 | 03 | 01 | 01 | 51 | 1.12 | | | 100 | 992.0 | | 022.7 | * |
| 072 | 1 | 02 | 02 | 01 | 94 | .32 | | | 51 | 45.0 | | 293.5 | |
| 072 | 1 | 02 | 02 | 01 | 94 | .41 | | | 49 | 45.0 | | 293.5 | |
| 073 | 3 | 04 | 01 | 01 | 204 | 1.38 | | | 75 | 97.0 | 216100 | 15.1 | * |
| 074 | 3 | 03 | 01 | 01 | 207 | 1.45 | | | 100 | 337.0 | 235100 | 110.5 | |
| 075 | 1 | 02 | 01 | 01 | 132 | .18 | | | 100 | 170.0 | | 037.0 | |
| 076 | 3 | 03 | 01 | 01 | 56 | .85 | | | 100 | | 444000 | 202.7 | * |
| 077 | 2 | 03 | 01 | 02 | 99 | 1.12 | 94 | .30 | 100 | 273.0 | | 22.7 | * |

TABLE I-2. SCREENING DATA AND ASSUMPTIONS (CONTINUED)

| A | B | C | D | E | F | G | | | H | I | J | K | |
|---|---|---|---|---|---|---|---|---|---|---|---|---|---|
| 078 | 3 | 04 | 01 | 02 | 44 | 1.43 | 137 | .88 | 100 | 236.0 | 193500 | 109.5 | |
| 079 | 0 | 01 | | | | | | | | 40.0 | | 078.6 | |
| 080 | 0 | 01 | | | | | | | | 60.0 | | 38.3 | |
| 081 | 0 | 01 | | | | | | | | 122.0 | | 52.0 | |
| 082 | 0 | 01 | | | | | | | | 67.0 | | 113.9 | |
| 083 | 1 | 03 | 02 | 01 | 153 | 1.22 | | | 90 | | | | # |
| 083 | 1 | 03 | 02 | 01 | 153 | .95 | | | 10 | | | | # |
| 084 | 3 | 05 | 01 | 02 | 173 | 3.08 | 133 | 1.05 | 100 | 352.0 | 145800 | 015.1 | * |
| 085 | 0 | 01 | | | | | | | | 67.0 | | 16.3 | |
| 086 | 2 | 02 | 01 | 02 | 12 | .35 | 85 | .76 | 100 | 161.0 | | 59.8 | |
| 087 | 2 | 02 | 01 | 01 | 12 | .35 | | | 100 | 161.0 | | 46.7 | |
| 088 | 0 | 03 | 01 | 01 | 86 | .75 | | | 100 | 169.0 | | 003.2 | |
| 089 | 0 | 02 | 01 | 02 | 85 | .40 | 12 | .13 | 100 | 149.0 | | 003.6 | |
| 090 | 0 | 01 | | | | | | | | 25.0 | | 167.9 | |
| 091 | 2 | 03 | 01 | 01 | 168 | .75 | | | 100 | 92.0 | | 104.2 | |
| 092 | 3 | 03 | 01 | 01 | 168 | .90 | | | 100 | 169.0 | 155400 | 003.9 | |
| 093 | 3 | 02 | 02 | 01 | 94 | .65 | | | 50 | 92.0 | 170000 | 044.2 | |
| 093 | 3 | 02 | 02 | 01 | 94 | .61 | | | 50 | 92.0 | 170000 | 044.2 | |
| 094 | 0 | 01 | | | | | | | | 69.0 | | 318.2 | |
| 095 | 3 | 05 | 02 | 01 | 183 | 1.94 | | | 50 | 238.0 | 140900 | | # |
| 095 | 3 | 05 | 02 | 01 | 002 | 2.04 | | | 50 | 238.0 | 140900 | | # |
| 096 | 2 | 02 | 01 | 02 | 12 | 00.87 | 94 | 00.32 | 100 | 94.0 | | 232.9 | |
| 097 | 3 | 03 | 01 | 02 | 168 | .57 | 93 | .60 | 100 | 149.0 | 140400 | 36.2 | |
| 098 | 3 | 05 | 01 | 02 | 97 | .97 | 2 | .65 | 100 | 184.0 | 135200 | 045.4 | * |
| 099 | 2 | 02 | 01 | 02 | 12 | .74 | 94 | .27 | 100 | 57.0 | | 200.2 | |
| 101 | 3 | 07 | 01 | 01 | 28 | 2.29 | | | 100 | | 140900 | 045.4 | * |
| 102 | 3 | 07 | 01 | 01 | 28 | 1.30 | | | 100 | 114.0 | 253000 | 038.2 | |
| 103 | 3 | 08 | 01 | 01 | 102 | 1.44 | | | 100 | 521.0 | 267200 | 009.1 | * |
| 104 | 2 | 02 | 01 | 02 | 135 | 1.08 | 94 | .33 | 100 | | | | # |
| 105 | 3 | 03 | 01 | 02 | 99 | .64 | 127 | .90 | 100 | | 230400 | | # |
| 106 | 3 | 02 | 03 | 01 | 132 | 4.44 | | | 33 | 365.0 | 276600 | 11.2 | |
| 106 | 3 | 02 | 03 | 01 | 90 | 2.58 | | | 33 | 365.0 | 276600 | 11.2 | |
| 106 | 3 | 02 | 03 | 01 | 176 | 2.82 | | | 33 | 365.0 | 276600 | 11.2 | |
| 107 | 3 | 01 | 00 | 00 | | | | | | 64.0 | 152200 | 11.4 | * |
| 108 | 3 | 03 | 01 | 01 | 133 | .47 | | | 75 | 37.0 | 140900 | 54.6 | |
| 109 | 2 | 02 | 02 | 01 | 12 | 1.87 | | | 50 | 131.0 | | 15.5 | |
| 109 | 2 | 02 | 02 | 01 | 139 | .82 | | | 50 | 131.0 | | 15.5 | |
| 110 | 2 | 01 | 00 | 00 | | | | | 100 | 70.0 | | 018.6 | |
| 111 | 0 | 01 | | | | | | | 100 | 50.0 | | 6.5 | * |
| 112 | 0 | 01 | | | | | | | 100 | 55.0 | | 15.1 | * |
| 113 | 3 | 03 | 01 | 01 | 9 | 1.35 | | | 100 | 610.0 | 317800 | 045.4 | * |
| 114 | 3 | 09 | 01 | 01 | 62 | 1.46 | | | 100 | 283.0 | 131300 | 139.0 | |
| 115 | 0 | 01 | | | | | | | | 52.0 | | 28.4 | |
| 116 | 3 | 07 | 01 | 01 | 118 | 1.00 | | | 100 | 146.0 | 149000 | 55.6 | |
| 117 | 3 | 08 | 01 | 02 | 116 | .63 | 120 | .80 | 100 | 288.0 | 149000 | 138.0 | |
| 118 | 3 | 06 | 02 | 01 | 120 | 1.93 | | | 50 | | 168300 | 46.3 | |
| 118 | 3 | 06 | 02 | 01 | 119 | 1.40 | | | 50 | | 168300 | 46.3 | |
| 119 | 3 | 03 | 01 | 01 | 58 | .80 | | | 95 | 228.0 | 168300 | 147.0 | |
| 120 | 2 | 05 | 01 | 01 | 068 | 01.68 | | | 100 | | | 153.0 | |

TABLE I-2. SCREENING DATA AND ASSUMPTIONS (CONTINUED)

| A | B | C | D | E | F | G | | | | | H | I | J | K | |
|---|---|---|---|---|---|---|---|---|---|---|---|---|---|---|---|
| 121 | 2 | 03 | 01 | 01 | 26 | .73 | | | | | 100 | | | | # |
| 122 | 2 | 02 | 01 | 01 | 132 | .79 | | | | | 100 | 244.0 | | 14.7 | |
| 123 | 3 | 04 | 01 | 01 | 183 | .71 | | | | | 100 | 159.0 | 278300 | 30.8 | |
| 124 | 3 | 04 | 01 | 01 | 183 | .60 | | | | | 100 | | 134100 | 139.7 | |
| 125 | 2 | 01 | 00 | 00 | | | | | | | 100 | 137.0 | | 023.0 | |
| 126 | 2 | 03 | 01 | 01 | 168 | .88 | | | | | 100 | 191.0 | | 10.6 | |
| 127 | 2 | 02 | 02 | 01 | 158 | 1.25 | | | | | 35 | 131.0 | | 40.4 | |
| 127 | 2 | 02 | 02 | 01 | 80 | 0.98 | | | | | 65 | 131.0 | | 40.4 | |
| 128 | 2 | 02 | 01 | 01 | 162 | 1.25 | | | | | 100 | 129.0 | | 33.5 | |
| 129 | 0 | 03 | 01 | 01 | 168 | 00.44 | | | | | 100 | | | 2.2 | * |
| 130 | 0 | 03 | 01 | 01 | 168 | .44 | | | | | 100 | 181.0 | | 003.8 | * |
| 131 | 3 | 03 | 01 | 01 | 09 | .96 | | | | | 100 | 432.0 | 968100 | 11.4 | * |
| 132 | 0 | 01 | | | | | | | | | 100 | | | | |
| 133 | 3 | 01 | 00 | 00 | | | | | | | 100 | 43.0 | 195000 | 243.6 | |
| 134 | 3 | 03 | 01 | 02 | 168 | .58 | 133 | .60 | | | 100 | 154.0 | 140000 | 007.4 | |
| 135 | 0 | 01 | | | | | | | | | 100 | 42.0 | | 72.8 | |
| 136 | 3 | 03 | 01 | 01 | 143 | 1.57 | | | | | 100 | 278.0 | 230700 | 5.7 | |
| 137 | 2 | 03 | 01 | 01 | 143 | 3.57 | | | | | 100 | | | 22.7 | * |
| 138 | 3 | 02 | 01 | 01 | 115 | 01.03 | | | | | 75 | 84.0 | 495600 | 017.8 | |
| 139 | 0 | 01 | | | | | | | | | | 35.0 | | 22.7 | * |
| 140 | 0 | 01 | | | | | | | | | | 72.0 | | 45.4 | * |
| 141 | 0 | 01 | | | | | | | | | | 72.0 | | 15.1 | * |
| 142 | 2 | 02 | 01 | 01 | 135 | .51 | | | | | 100 | 117.0 | | 74.5 | |
| 143 | 3 | 02 | 01 | 01 | 135 | 00.51 | | | | | 100 | 312.0 | 269000 | 74.5 | |
| 144 | 2 | 02 | 01 | 02 | 012 | 00.80 | 184 | 00.43 | | | 100 | 60.0 | | 109.5 | |
| 145 | 3 | 05 | 01 | 02 | 183 | 00.27 | 173 | .88 | | | 100 | 191.0 | 140900 | 53.5 | |
| 146 | 2 | 02 | 02 | 01 | 184 | .94 | | | | | 70 | 131.0 | | 132.7 | |
| 146 | 2 | 02 | 02 | 02 | 184 | .78 | 151 | 3.00 | | | 30 | 131.0 | | 132.7 | |
| 147 | 0 | 01 | | | | | | | | | 100 | | | 045.4 | * |
| 148 | 3 | 06 | 01 | 01 | 183 | 01.25 | | | | | 100 | 149.0 | 253000 | 21.2 | |
| 149 | 2 | 03 | 01 | 01 | 144 | .80 | | | | | 100 | | | 394.4 | |
| 150 | 3 | 02 | 01 | 01 | 184 | 03.00 | | | | | 100 | 126.0 | 149000 | 10.4 | |
| 151 | 0 | 01 | | | | | | | | | | 35.0 | | 27.3 | |
| 152 | 3 | 07 | 02 | 01 | 028 | 01.03 | | | | | 70 | 72.0 | 149000 | 9.4 | |
| 153 | 2 | 02 | 01 | 01 | 154 | 1.85 | | | | | 100 | 144.0 | | 227.0 | |
| 154 | 0 | 01 | | | | | | | | | | 82.0 | | 30.9 | |
| 155 | 2 | 02 | 01 | 01 | 154 | 01.00 | | | | | 100 | | | | # |
| 156 | 2 | 04 | 01 | 03 | 183 | 00.58 | 122 | .27 | 133 | .32 | | 231.0 | | 52.4 | |
| 157 | 2 | 04 | 01 | 02 | 106 | .37 | 108 | .43 | | | 100 | 394.0 | | 015.1 | * |
| 158 | 0 | 01 | | | | | | | | | | 84.0 | | 5.9 | |
| 159 | 2 | 03 | 01 | 01 | 168 | .93 | | | | | 100 | 203.0 | | 10.4 | |
| 160 | 3 | 02 | 01 | 01 | 12 | .65 | | | | | 100 | 114.0 | 157000 | 037.3 | |
| 161 | 3 | 05 | 01 | 01 | 227 | 3.27 | | | | | 100 | | 280600 | 045.4 | * |
| 162 | 3 | 01 | | | | | | | | | | 60.0 | | 039.2 | |
| 163 | 3 | 05 | 01 | 02 | 173 | 00.62 | 162 | 00.45 | | | 100 | 126.0 | 147400 | 005.8 | |

TABLE I-2. SCREENING DATA AND ASSUMPTIONS (CONTINUED)

| A | B | C | D | E | F | G | | | H | I | J | K | |
|---|---|---|---|---|---|---|---|---|---|---|---|---|---|
| 164 | 0 | 05 | 01 | 02 | 136 | 1.27 | 93 | .26 | 100 | 181.0 | | 4.7 | |
| 165 | 0 | 01 | | | | | | | | 154.0 | | 11.4 | * |
| 166 | 3 | 01 | | | | | | | 100 | 285.0 | 968100 | 017.9 | |
| 167 | 2 | 01 | | | | | | | 100 | 164.0 | | 009.8 | |
| 168 | 3 | 02 | 01 | 01 | 94 | 1.10 | | | 100 | 126.0 | 133800 | 142.1 | |
| 169 | 3 | 03 | 01 | 01 | 168 | .84 | | | 100 | 92.0 | 155400 | 9.4 | |
| 170 | 0 | 01 | | | | | | | | 35.0 | | 15.1 | * |
| 171 | 2 | 03 | 01 | 01 | 26 | .96 | | | 100 | | | | # |
| 172 | 0 | 01 | | | | | | | | 72.0 | | | # |
| 173 | 3 | 04 | 01 | 01 | 149 | 1.62 | | | 88 | 87.0 | 240000 | 67.6 | |
| 174 | 2 | 03 | 01 | 01 | 96 | 1.09 | | | 100 | | | | # |
| 175 | 2 | 03 | 03 | 01 | 146 | .66 | | | 33 | 141.0 | | 15.1 | * |
| 175 | 2 | 03 | 03 | 01 | 146 | .80 | | | 33 | 141.0 | | 15.1 | * |
| 175 | 2 | 03 | 03 | 01 | 094 | .47 | | | 33 | 141.0 | | 15.1 | * |
| 176 | 0 | 01 | | | | | | | | 30.0 | | 109.6 | |
| 177 | 2 | 03 | 01 | 01 | 146 | .76 | | | 100 | 131.0 | | 041.3 | |
| 178 | 2 | 04 | 03 | 01 | 180 | 1.92 | | | 33 | | | | # |
| 178 | 2 | 04 | 03 | 01 | 185 | 1.38 | | | 33 | | | | # |
| 178 | 2 | 04 | 03 | 01 | 228 | 3.27 | | | 33 | | | | # |
| 179 | 3 | 03 | 02 | 01 | 184 | .63 | | | 50 | 278.0 | 823700 | 015.3 | |
| 179 | 3 | 03 | 02 | 02 | 184 | .93 | 182 | 1.10 | 50 | 278.0 | 823700 | 015.3 | |
| 180 | 3 | 03 | 02 | 01 | 94 | .54 | | | 50 | 92.0 | 193500 | 22.8 | |
| 180 | 3 | 03 | 02 | 01 | 93 | .89 | | | 50 | 92.0 | 193500 | 22.8 | |
| 181 | 3 | 04 | 01 | 01 | 175 | 1.40 | | | 50 | 131.0 | 249100 | 24.3 | |
| 182 | 3 | 02 | 01 | 01 | 184 | 00.90 | | | 100 | 64.0 | 170000 | 157.0 | |
| 183 | 3 | 03 | 02 | 01 | 182 | 01.23 | | | 40 | 74.0 | 218400 | 57.2 | |
| 183 | 3 | 03 | 02 | 01 | 144 | 01.38 | | | 55 | 74.0 | 218400 | 57.2 | |
| 184 | 0 | 01 | | | | | | | | 52.0 | | 088.1 | |
| 185 | 2 | 02 | 01 | 01 | 184 | 1.12 | | | 100 | 126.0 | | 132.5 | |
| 186 | 3 | 02 | 01 | 01 | 184 | 0.83 | | | | 176.0 | 149000 | 49.0 | |
| 187 | 2 | 08 | 03 | 02 | 106 | .28 | 34 | .72 | 50 | 196.0 | | 025.4 | |
| 187 | 2 | 08 | 03 | 02 | 232 | .57 | 34 | .58 | 20 | 196.0 | | 025.4 | |
| 187 | 2 | 08 | 03 | 02 | 184 | .47 | 34 | .83 | 30 | 196.0 | | 025.4 | |
| 188 | 2 | 03 | 02 | 02 | 106 | .26 | 93 | 00.46 | 50 | 164.0 | | 027.2 | |
| 188 | 2 | 03 | 02 | 02 | 184 | .42 | 93 | .46 | 50 | 164.0 | | 027.2 | |
| 189 | 3 | 02 | 01 | 02 | 12 | .93 | 184 | .50 | 100 | | 149300 | 15.1 | * |
| 190 | 3 | 01 | | | | | | | 100 | 218.0 | 152200 | 022.7 | * |
| 191 | 3 | 01 | | | | | | | 100 | 63.0 | 152200 | 045.4 | * |
| 192 | 3 | 01 | | | | | | | 100 | 63.0 | 152200 | 10.2 | |
| 193 | 1 | 04 | 01 | 01 | 195 | .66 | | | 100 | | | 227.0 | |
| 194 | 3 | 04 | 03 | 01 | 235 | 1.20 | | | 33 | 67.0 | 330200 | 029.9 | |
| 194 | 3 | 04 | 03 | 01 | 235 | 1.01 | | | 33 | 67.0 | 330200 | 029.9 | |
| 194 | 3 | 04 | 03 | 01 | 94 | .28 | | | 33 | 67.0 | 330200 | 029.9 | |
| 195 | 3 | 03 | 02 | 01 | 043 | .55 | | | 50 | 80.0 | 330200 | 30.4 | |
| 195 | 3 | 03 | 02 | 01 | 132 | .11 | | | 50 | 80.0 | 330200 | 30.4 | |

TABLE I-2. SCREENING DATA AND ASSUMPTIONS (CONTINUED)

| A | B | C | D | E | F | G | | | H | I | J | K | |
|---|---|---|---|---|---|---|---|---|---|---|---|---|---|
| 196 | 1 | 04 | 01 | 01 | 048 | .80 | | | 100 | 590.0 | | 024.8 | |
| 197 | 2 | 06 | 01 | 01 | 61 | 1.74 | | | 100 | | | 521.5 | |
| 198 | 3 | 06 | 01 | 01 | 32 | 1.79 | | | 100 | 409.0 | 149300 | 015.0 | |
| 199 | 3 | 04 | 01 | 01 | 48 | .73 | | | | 580.0 | 232400 | 027.8 | |
| 200 | 3 | 03 | 02 | 01 | 51 | .22 | | | | 782.0 | 232400 | 73.5 | |
| 200 | 3 | 03 | 02 | 01 | 51 | .75 | | | | 782.0 | 232400 | 73.5 | |
| 201 | 2 | 02 | 01 | 01 | 211 | 3.10 | | | 100 | 264.0 | | 017.0 | |
| 202 | 3 | 04 | 01 | 01 | 183 | .27 | | | 100 | | 280600 | | # |
| 203 | 3 | 05 | 02 | 01 | 49 | .47 | | | 60 | 114.0 | 236300 | 097.3 | |
| 203 | 3 | 05 | 02 | 01 | 73 | .73 | | | 30 | 114.0 | 236300 | 097.3 | |
| 204 | 3 | 03 | 02 | 01 | 72 | .62 | | | 51 | 176.0 | 236300 | 15.1 | * |
| 204 | 3 | 03 | 02 | 01 | 72 | 1.06 | | | 49 | 176.0 | 236300 | 15.1 | * |
| 205 | 3 | 03 | 02 | 01 | 106 | 0.22 | | | 50 | 87.0 | 330200 | 027.2 | |
| 205 | 3 | 03 | 02 | 01 | 72 | 1.50 | | | 50 | 87.0 | 330200 | 027.2 | |
| 206 | 3 | 04 | 01 | 01 | 195 | 1.60 | | | 100 | 251.0 | 220700 | 009.8 | |
| 207 | 3 | 02 | 01 | 01 | 132 | .13 | | | 100 | 164.0 | 223200 | 031.6 | |
| 208 | 3 | 03 | 01 | 01 | 122 | 0.44 | | | 100 | | 444000 | 011.4 | * |
| 209 | 1 | 06 | 01 | 01 | 194 | 1.26 | | | 100 | 332.0 | | 015.1 | * |
| 210 | 3 | 01 | | | | | | | | 57.0 | 107500 | 004.6 | |
| 211 | 0 | 01 | | | | | | | | 47.0 | | 121.1 | |
| 212 | 3 | 02 | 01 | 01 | 211 | .36 | | | 100 | 43.0 | 152200 | | # |
| 213 | 3 | 04 | 01 | 01 | 1 | 1.05 | | | 100 | | 165000 | | # |
| 214 | 3 | 05 | 01 | 01 | 213 | 1.63 | | | 76 | | 163000 | 022.7 | * |
| 215 | 2 | 06 | 01 | 01 | 214 | 1.44 | | | 100 | 471.0 | | | # |
| 216 | 3 | 04 | 01 | 01 | 108 | 3.58 | | | 100 | 220.0 | 146500 | 9.3 | |
| 217 | 2 | 02 | 01 | 01 | 112 | 1.33 | | | 100 | 126.0 | | 022.7 | * |
| 220 | 2 | 02 | 01 | 01 | 133 | 1.03 | | | 100 | 247.0 | | 020.8 | |
| 221 | 3 | 02 | 01 | 01 | 133 | 0.91 | | | 100 | 267.0 | 267200 | 9.1 | * |
| 222 | 3 | 05 | 01 | 01 | 183 | 1.25 | | | 100 | 176.0 | 193500 | 11.4 | * |
| 223 | 0 | 02 | 01 | 01 | 135 | 0.67 | | | 100 | | | | |
| 224 | 0 | 08 | 01 | 01 | 034 | 0.77 | | | 100 | | | | |
| 225 | 0 | 02 | 01 | 01 | 094 | 0.50 | | | 100 | | | | |
| 226 | 0 | 02 | 01 | 01 | 093 | 1.12 | | | 100 | | | | |
| 227 | 0 | 04 | 01 | 01 | 091 | 0.36 | | | 100 | | | | |
| 228 | 0 | 02 | 01 | 01 | 094 | 0.32 | | | 100 | | | | |
| 230 | 0 | 02 | 01 | 01 | 039 | 1.25 | | | 100 | | | | |
| 232 | 0 | 07 | 01 | 02 | 095 | 0.83 | 108 | 0.60 | 100 | | | | |
| 234 | 1 | 04 | 01 | 01 | 189 | 0.32 | | | 100 | 640.0 | | 045.4 | * |
| 235 | 3 | 03 | 01 | 01 | 106 | 0.22 | | | 100 | 146.0 | 330000 | 045.4 | * |
| 236 | 3 | 03 | 01 | 01 | 133 | 0.32 | | | 100 | | 255500 | 011.4 | * |
| 237 | 2 | 02 | 01 | 02 | 133 | 0.36 | 154 | 0.64 | 100 | 42.0 | | 85.6 | |

TABLE I-3. SCREENING RESULTS

| A | B | C | D | E | F | G | H |
|---|---|---|---|---|---|---|---|
| 1 | 104.0 | 0.6 | 1.0 | 1.00 | | 2.0 | 0.0 |
| 2 | 82.0 | 0.2 | 1.3 | 1.59 | | 4.0 | 0.0 |
| 3 | 131.0 | 0.1 | 1.9 | 1.45 | | 7.0 | 0.0 |
| 4 | 141.0 | 1.2 | 2.4 | 1.72 | | 8.0 | 0.0 |
| 5 | 99.0 | 0.1 | 1.9 | 1.90 | | 10.0 | 0.0 |
| 6 | 104.0 | 1.3 | 2.5 | 2.37 | | 11.0 | 0.0 |
| 7 | 717.0 | 3.1 | 4.7 | 0.65 | | 12.0 | 0.0 |
| 8 | 181.0 | 1.1 | 1.1 | 0.59 | | 13.0 | 0.0 |
| 9 | 159.0 | 1.2 | 1.2 | 0.75 | | 14.0 | 0.0 |
| 10 | 176.0 | 3.0 | 3.0 | 1.73 | | 15.0 | 0.0 |
| 11 | 122.0 | 0.4 | 1.0 | 0.81 | | 16.0 | 0.0 |
| 12 | 55.0 | 0.0 | 0.0 | 0.00 | F | 17.0 | 0.0 |
| 13 | 161.0 | 0.8 | 0.8 | 0.49 | | 18.0 | 0.0 |
| 14 | 112.0 | 0.1 | 0.1 | 0.10 | | 19.0 | 0.0 |
| 15 | 169.0 | 1.0 | 1.9 | 1.10 | | 20.0 | 0.0 |
| 16 | 203.0 | 2.2 | 4.0 | 1.95 | | 21.0 | 0.0 |
| 17 | 171.0 | 0.8 | 2.4 | 1.43 | | 22.0 | 0.0 |
| 18 | 154.0 | 3.0 | 4.2 | 2.73 | | 23.0 | 0.0 |
| 19 | 154.0 | 0.8 | 1.1 | 0.73 | | 24.0 | 0.0 |
| 20 | 112.0 | 0.1 | 0.2 | 0.22 | | 25.0 | 0.0 |
| 21 | 179.0 | 3.3 | 3.3 | 1.83 | | 27.0 | 0.0 |
| 22 | 0.0 | 0.0 | 0.7 | 0.00 | @ | 31.0 | 14.8 |
| 23 | 131.0 | 2.9 | 2.9 | 2.23 | | 32.0 | 0.0 |
| 24 | 131.0 | 2.5 | 2.5 | 1.93 | | 33.0 | 0.0 |
| 25 | 236.0 | 2.0 | 3.4 | 1.43 | | 34.0 | 0.0 |
| 26 | 107.0 | 0.4 | 0.4 | 0.42 | | 35.0 | 0.0 |
| 27 | 107.0 | 0.0 | 0.0 | 0.00 | F | 37.0 | 0.0 |
| 28 | 99.0 | 0.3 | 0.3 | 0.25 | | 38.0 | 0.0 |
| 29 | 27.0 | 0.0 | 0.0 | 0.00 | F | 40.0 | 0.0 |
| 30 | 37.0 | 0.0 | 0.0 | 0.00 | F | 41.0 | 0.0 |
| 31 | 223.0 | 0.7 | 3.0 | 1.35 | | 42.0 | 0.0 |
| 32 | 241.0 | 0.5 | 4.0 | 1.65 | | 43.0 | 0.0 |
| 33 | 0.0 | 0.4 | 8.5 | 0.00 | @ | 44.0 | 170.6 |
| 34 | 92.0 | 0.4 | 0.7 | 0.72 | | 45.0 | 0.0 |
| 35 | 126.0 | 2.5 | 2.5 | 1.95 | | 47.0 | 0.0 |
| 36 | 104.0 | 0.3 | 3.2 | 3.09 | | 48.0 | 0.0 |
| 37 | 102.0 | 0.0 | 0.0 | 0.00 | F | 49.0 | 0.0 |
| 38 | 67.0 | 0.0 | 0.0 | 0.00 | F | 50.0 | 0.0 |
| 39 | 40.0 | 0.0 | 0.0 | 0.00 | | 51.0 | 0.0 |
| 40 | 164.0 | 1.3 | 1.9 | 1.19 | | 54.0 | 0.0 |
| 41 | 508.0 | 1.6 | 2.9 | 0.58 | | 54.0 | 0.0 |
| 42 | 0.0 | 0.3 | 0.3 | 0.00 | @ | 55.0 | 6.7 |
| 43 | 60.0 | 0.5 | 0.5 | 0.83 | | 56.0 | 0.0 |
| 44 | 184.0 | 1.7 | 1.7 | 0.91 | | 57.0 | 0.0 |
| 45 | 122.0 | 1.4 | 1.4 | 1.12 | | 58.0 | 0.0 |
| 46 | 384.0 | 1.9 | 2.3 | 0.61 | | 59.0 | 0.0 |
| 48 | 82.0 | 1.3 | 1.6 | 1.90 | | 62.0 | 0.0 |
| 49 | 72.0 | 0.1 | 1.2 | 1.70 | | 64.0 | 0.0 |

TABLE I-3. SCREENING RESULTS (CONTINUED)

| A | B | C | D | E | F | G | H |
|---|---|---|---|---|---|---|---|
| 50 | 994.0 | 7.7 | 13.7 | 1.38 | | 65.0 | 0.0 |
| 51 | 104.0 | 1.4 | 1.4 | 1.37 | | 66.0 | 0.0 |
| 52 | 181.0 | 2.5 | 2.5 | 1.39 | | 67.0 | 0.0 |
| 53 | 263.0 | 2.2 | 2.2 | 0.84 | | 68.0 | 0.0 |
| 54 | 246.0 | 2.6 | 3.9 | 1.60 | | 69.0 | 0.0 |
| 55 | 0.0 | 0.2 | 5.4 | 0.00 | @ | 71.0 | 108.0 |
| 56 | 156.0 | 4.5 | 4.5 | 2.86 | | 72.0 | 0.0 |
| 57 | 59.0 | 2.3 | 2.3 | 3.85 | | 73.0 | 0.0 |
| 58 | 62.0 | 0.1 | 0.1 | 0.24 | | 74.0 | 0.0 |
| 60 | 193.0 | 0.3 | 0.5 | 0.24 | | 77.0 | 0.0 |
| 61 | 203.0 | 0.2 | 1.5 | 0.72 | | 79.0 | 0.0 |
| 62 | 181.0 | 0.2 | 1.2 | 0.64 | | 81.0 | 0.0 |
| 63 | 0.0 | 3.1 | 4.6 | 0.00 | @ | 82.0 | 91.2 |
| 64 | 0.0 | 0.0 | 0.0 | 0.00 | F | 84.0 | 0.0 |
| 65 | 0.0 | 0.6 | 0.6 | 0.00 | @ | 85.0 | 12.4 |
| 66 | 191.0 | 4.5 | 4.5 | 2.34 | | 86.0 | 0.0 |
| 67 | 35.0 | 0.0 | 0.0 | 0.00 | F | 87.0 | 0.0 |
| 68 | 0.0 | 0.5 | 1.4 | 0.00 | @ | 89.0 | 27.7 |
| 69 | 0.0 | 0.2 | 0.7 | 0.00 | @ | 90.0 | 13.1 |
| 70 | 317.0 | 1.5 | 3.7 | 1.16 | | 91.0 | 0.0 |
| 71 | 992.0 | 5.1 | 6.7 | 0.68 | | 92.0 | 0.0 |
| 72 | 45.0 | 0.4 | 0.4 | 0.88 | | 93.0 | 0.0 |
| 73 | 97.0 | 1.4 | 4.2 | 4.30 | | 95.0 | 0.0 |
| 74 | 337.0 | 0.2 | 1.2 | 0.37 | | 96.0 | 0.0 |
| 75 | 170.0 | 3.1 | 3.1 | 1.85 | | 97.0 | 0.0 |
| 76 | 0.0 | 0.2 | 4.0 | 0.00 | @ | 98.0 | 80.3 |
| 77 | 273.0 | 1.6 | 1.8 | 0.65 | | 99.0 | 0.0 |
| 78 | 236.0 | 0.2 | 5.1 | 2.15 | | 100.0 | 0.0 |
| 79 | 40.0 | 0.0 | 0.0 | 0.00 | F | 101.0 | 0.0 |
| 80 | 60.0 | 0.0 | 0.0 | 0.00 | F | 102.0 | 0.0 |
| 81 | 122.0 | 0.0 | 0.0 | 0.00 | F | 103.0 | 0.0 |
| 82 | 67.0 | 0.0 | 0.0 | 0.00 | F | 104.0 | 0.0 |
| 83 | 0.0 | 2.6 | 2.7 | 0.00 | @ | 105.0 | 55.0 |
| 84 | 352.0 | 1.0 | 3.9 | 1.11 | | 106.0 | 0.0 |
| 85 | 67.0 | 0.0 | 0.0 | 0.00 | F | 107.0 | 0.0 |
| 86 | 161.0 | 0.6 | 0.6 | 0.37 | | 108.0 | 0.0 |
| 87 | 161.0 | 0.8 | 0.8 | 0.47 | | 109.0 | 0.0 |
| 88 | 169.0 | 0.0 | 0.4 | 0.26 | | 110.0 | 0.0 |
| 89 | 149.0 | 0.0 | 0.0 | 0.00 | | 111.0 | 0.0 |
| 90 | 25.0 | 0.0 | 0.0 | 0.00 | F | 112.0 | 0.0 |
| 91 | 92.0 | 0.3 | 0.4 | 0.45 | | 113.0 | 0.0 |
| 92 | 169.0 | 4.0 | 4.1 | 2.41 | | 114.0 | 0.0 |
| 93 | 92.0 | 0.4 | 0.4 | 0.42 | | 115.0 | 0.0 |
| 94 | 69.0 | 0.0 | 0.0 | 0.00 | F | 117.0 | 0.0 |
| 95 | 238.0 | 0.3 | 3.0 | 1.25 | | 119.0 | 0.0 |
| 96 | 94.0 | 0.2 | 0.2 | 0.16 | | 120.0 | 0.0 |
| 97 | 149.0 | 0.4 | 0.7 | 0.45 | | 121.0 | 0.0 |
| 98 | 184.0 | 0.3 | 1.8 | 0.98 | | 122.0 | 0.0 |
| 99 | 57.0 | 0.2 | 0.2 | 0.31 | | 123.0 | 0.0 |

TABLE I-3. SCREENING RESULTS (CONTINUED)

| A | B | C | D | E | F | G | H |
|---|---|---|---|---|---|---|---|
| 101 | 0.0 | 0.3 | 0.9 | 0.00 | @ | 125.0 | 17.7 |
| 102 | 114.0 | 0.7 | 1.0 | 0.87 | | 126.0 | 0.0 |
| 103 | 521.0 | 2.9 | 4.4 | 0.84 | | 127.0 | 0.0 |
| 104 | 0.0 | 0.8 | 0.8 | 0.00 | @ | 128.0 | 15.7 |
| 105 | 0.0 | 0.5 | 1.4 | 0.00 | @ | 129.0 | 28.3 |
| 106 | 365.0 | 2.5 | 2.5 | 0.68 | | 130.0 | 0.0 |
| 107 | 44.0 | 1.3 | 1.3 | 2.09 | | 133.0 | 0.0 |
| 108 | 37.0 | 0.3 | 0.3 | 0.80 | | 134.0 | 0.0 |
| 109 | 131.0 | 2.3 | 2.3 | 1.75 | | 135.0 | 0.0 |
| 110 | 70.0 | 1.9 | 1.9 | 2.73 | | 137.0 | 0.0 |
| 111 | 50.0 | 0.0 | 0.0 | 0.00 | F | 138.0 | 0.0 |
| 112 | 55.0 | 0.0 | 0.0 | 0.00 | F | 139.0 | 0.0 |
| 113 | 610.0 | 0.7 | 2.3 | 0.38 | | 140.0 | 0.0 |
| 114 | 283.0 | 0.1 | 1.8 | 0.63 | | 141.0 | 0.0 |
| 115 | 52.0 | 0.0 | 0.0 | 0.00 | F | 142.0 | 0.0 |
| 116 | 146.0 | 0.3 | 5.6 | 3.82 | | 143.0 | 0.0 |
| 117 | 288.0 | 0.1 | 5.7 | 1.97 | | 144.0 | 0.0 |
| 118 | 0.0 | 0.4 | 5.3 | 0.00 | @ | 145.0 | 106.1 |
| 119 | 228.0 | 0.1 | 0.2 | 0.10 | | 147.0 | 0.0 |
| 120 | 0.0 | 0.2 | 2.6 | 0.00 | @ | 148.0 | 51.2 |
| 121 | 0.0 | 0.8 | 1.1 | 0.00 | @ | 149.0 | 22.2 |
| 122 | 244.0 | 2.4 | 2.4 | 0.99 | | 150.0 | 0.0 |
| 123 | 159.0 | 0.9 | 1.5 | 0.94 | | 151.0 | 0.0 |
| 124 | 0.0 | 0.1 | 0.6 | 0.00 | @ | 152.0 | 11.9 |
| 125 | 137.0 | 1.5 | 1.5 | 1.13 | | 153.0 | 0.0 |
| 126 | 191.0 | 3.4 | 3.4 | 1.80 | | 154.0 | 0.0 |
| 127 | 131.0 | 0.9 | 0.9 | 0.67 | | 155.0 | 0.0 |
| 128 | 129.0 | 1.1 | 1.1 | 0.82 | | 157.0 | 0.0 |
| 129 | 0.0 | 0.0 | 0.0 | 0.00 | @ | 158.0 | 0.8 |
| 130 | 181.0 | 0.0 | 0.0 | 0.02 | | 159.0 | 0.0 |
| 131 | 432.0 | 8.5 | 9.6 | 2.23 | | 160.0 | 0.0 |
| 132 | 0.0 | 0.0 | 0.0 | 0.00 | F | 161.0 | 0.0 |
| 133 | 43.0 | 0.1 | 0.1 | 0.19 | | 162.0 | 0.0 |
| 134 | 154.0 | 1.9 | 2.0 | 1.30 | | 163.0 | 0.0 |
| 135 | 42.0 | 0.0 | 0.0 | 0.00 | F | 164.0 | 0.0 |
| 136 | 278.0 | 4.0 | 4.6 | 1.66 | | 165.0 | 0.0 |
| 137 | 0.0 | 1.6 | 2.9 | 0.00 | @ | 166.0 | 57.1 |
| 138 | 84.0 | 2.8 | 2.8 | 3.31 | | 167.0 | 0.0 |
| 139 | 35.0 | 0.0 | 0.0 | 0.00 | F | 168.0 | 0.0 |
| 140 | 72.0 | 0.0 | 0.0 | 0.00 | F | 169.0 | 0.0 |
| 141 | 72.0 | 0.0 | 0.0 | 0.00 | F | 170.0 | 0.0 |
| 142 | 117.0 | 0.5 | 0.5 | 0.41 | | 171.0 | 0.0 |
| 143 | 312.0 | 0.4 | 0.4 | 0.12 | | 172.0 | 0.0 |
| 144 | 60.0 | 0.3 | 0.3 | 0.54 | | 173.0 | 0.0 |
| 145 | 191.0 | 0.3 | 1.3 | 0.68 | | 174.0 | 0.0 |
| 146 | 131.0 | 0.3 | 0.3 | 0.20 | | 175.0 | 0.0 |
| 147 | 0.0 | 0.0 | 0.0 | 0.00 | F | 177.0 | 0.0 |

TABLE I-3. SCREENING RESULTS (CONTINUED)

| A | B | C | D | E | F | G | H |
|---|---|---|---|---|---|---|---|
| 148 | 149.0 | 1.2 | 2.2 | 1.50 | | 178.0 | 0.0 |
| 149 | 0.0 | 0.1 | 0.4 | 0.00 | @ | 179.0 | 7.0 |
| 150 | 126.0 | 1.4 | 1.4 | 1.14 | | 180.0 | 0.0 |
| 151 | 35.0 | 0.0 | 0.0 | 0.00 | F | 181.0 | 0.0 |
| 152 | 72.0 | 1.6 | 1.8 | 2.56 | | 182.0 | 0.0 |
| 153 | 144.0 | 0.2 | 0.2 | 0.11 | | 184.0 | 0.0 |
| 154 | 82.0 | 0.0 | 0.0 | 0.00 | F | 185.0 | 0.0 |
| 155 | 0.0 | 0.8 | 0.8 | 0.00 | @ | 186.0 | 15.7 |
| 156 | 231.0 | 0.7 | 1.8 | 0.80 | | 187.0 | 0.0 |
| 157 | 394.0 | 2.4 | 3.4 | 0.86 | | 188.0 | 0.0 |
| 158 | 84.0 | 0.0 | 0.0 | 0.00 | F | 189.0 | 0.0 |
| 159 | 203.0 | 3.4 | 3.5 | 1.73 | | 190.0 | 0.0 |
| 160 | 114.0 | 0.4 | 0.4 | 0.37 | | 191.0 | 0.0 |
| 161 | 0.0 | 0.6 | 1.1 | 0.00 | @ | 192.0 | 22.1 |
| 162 | 60.0 | 0.0 | 0.0 | 0.00 | | 193.0 | 0.0 |
| 163 | 126.0 | 2.5 | 3.1 | 2.47 | | 194.0 | 0.0 |
| 164 | 181.0 | 0.0 | 6.0 | 3.29 | | 195.0 | 0.0 |
| 165 | 154.0 | 0.0 | 0.0 | 0.00 | F | 196.0 | 0.0 |
| 166 | 285.0 | 5.4 | 5.4 | 1.90 | | 197.0 | 0.0 |
| 167 | 164.0 | 3.6 | 3.6 | 2.22 | | 198.0 | 0.0 |
| 168 | 126.0 | 0.1 | 0.1 | 0.07 | | 199.0 | 0.0 |
| 169 | 92.0 | 1.7 | 1.7 | 1.88 | | 200.0 | 0.0 |
| 170 | 35.0 | 0.0 | 0.0 | 0.00 | F | 201.0 | 0.0 |
| 171 | 0.0 | 0.8 | 1.2 | 0.00 | @ | 202.0 | 24.3 |
| 172 | 72.0 | 0.0 | 0.0 | 0.00 | F | 203.0 | 0.0 |
| 173 | 87.0 | 0.4 | 0.9 | 1.06 | | 204.0 | 0.0 |
| 174 | 0.0 | 0.8 | 1.0 | 0.00 | @ | 208.0 | 19.0 |
| 175 | 141.0 | 2.4 | 2.6 | 1.82 | | 209.1 | 0.0 |
| 176 | 30.0 | 0.0 | 0.0 | 0.00 | F | 210.0 | 0.0 |
| 177 | 131.0 | 0.9 | 1.1 | 0.81 | | 211.0 | 0.0 |
| 178 | 0.0 | 0.8 | 3.1 | 0.00 | @ | 212.0 | 61.4 |
| 179 | 278.0 | 5.4 | 5.5 | 1.98 | | 214,0 | 0.0 |
| 180 | 92.0 | 0.8 | 1.2 | 1.29 | | 216.0 | 0.0 |
| 181 | 131.0 | 1.0 | 4.6 | 3.53 | | 217.0 | 0.0 |
| 182 | 64.0 | 0.1 | 0.1 | 0.17 | | 218.0 | 0.0 |
| 183 | 74.0 | 0.4 | 0.8 | 1.12 | | 220.0 | 0.0 |
| 184 | 52.0 | 0.0 | 0.0 | 0.00 | F | 221.0 | 0.0 |
| 185 | 126.0 | 0.3 | 0.3 | 0.21 | | 222.0 | 0.0 |
| 186 | 176.0 | 0.3 | 0.3 | 0.17 | | 223.0 | 0.0 |
| 187 | 196.0 | 1.4 | 3.3 | 1.68 | | 225.0 | 0.0 |
| 188 | 164.0 | 1.3 | 2.1 | 1.30 | | 227.0 | 0.0 |
| 189 | 0.0 | 1.0 | 1.0 | 0.00 | @ | 229.0 | 19.8 |
| 190 | 218.0 | 0.7 | 0.7 | 0.31 | | 230.0 | 0.0 |
| 191 | 63.0 | 0.3 | 0.3 | 0.53 | | 231.0 | 0.0 |
| 192 | 63.0 | 1.5 | 1.5 | 2.37 | | 232.0 | 0.0 |

TABLE I-3. SCREENING RESULTS (CONTINUED)

| A | B | C | D | E | F | G | H |
|---|---|---|---|---|---|---|---|
| 193 | 0.0 | 0.5 | 1.4 | 0.00 | @ | 233.0 | 28.2 |
| 194 | 67.0 | 1.1 | 2.6 | 3.92 | | 234.0 | 0.0 |
| 195 | 80.0 | 1.1 | 1.4 | 1.70 | | 235.0 | 0.0 |
| 196 | 590.0 | 4.7 | 5.9 | 1.00 | | 237.0 | 0.0 |
| 197 | 0.0 | 0.1 | 2.6 | 0.00 | @ | 238.0 | 52.5 |
| 198 | 409.0 | 1.0 | 8.1 | 1.98 | | 240.0 | 0.0 |
| 199 | 580.0 | 0.8 | 2.0 | 0.34 | | 241.0 | 0.0 |
| 200 | 782.0 | 0.3 | 1.4 | 0.18 | | 243.0 | 0.0 |
| 201 | 264.0 | 2.1 | 2.1 | 0.79 | | 244.0 | 0.0 |
| 202 | 0.0 | 0.6 | 0.8 | 0.00 | @ | 245.0 | 16.8 |
| 203 | 114.0 | 0.2 | 3.3 | 2.88 | | 247.0 | 0.0 |
| 204 | 176.0 | 1.6 | 2.0 | 1.13 | | 249.0 | 0.0 |
| 205 | 87.0 | 1.2 | 1.8 | 2.08 | | 251.0 | 0.0 |
| 206 | 251.0 | 2.3 | 4.4 | 1.76 | | 252.0 | 0.0 |
| 207 | 164.0 | 0.7 | 0.7 | 0.43 | | 253.0 | 0.0 |
| 208 | 0.0 | 3.9 | 5.0 | 0.00 | @ | 254.0 | 99.2 |
| 209 | 332.0 | 7.7 | 11.0 | 3.31 | | 255.0 | 0.0 |
| 210 | 57.0 | 2.3 | 2.3 | 4.10 | | 256.0 | 0.0 |
| 211 | 47.0 | 0.0 | 0.0 | 0.00 | F | 256.1 | 0.0 |
| 212 | 43.0 | 0.3 | 0.3 | 0.78 | | 256.2 | 0.0 |
| 213 | 0.0 | 0.4 | 1.5 | 0.00 | @ | 259.0 | 29.2 |
| 214 | 0.0 | 0.7 | 3.1 | 0.00 | @ | 260.0 | 61.9 |
| 215 | 471.0 | 0.8 | 5.2 | 1.11 | | 261.0 | 0.0 |
| 216 | 220.0 | 1.6 | 2.6 | 1.20 | | 262.0 | 0.0 |
| 217 | 126.0 | 1.6 | 1.6 | 1.24 | | 263.0 | 0.0 |
| 220 | 247.0 | 1.7 | 1.7 | 0.69 | | 266.0 | 0.0 |
| 221 | 267.0 | 2.9 | 2.9 | 1.10 | | 267.0 | 0.0 |
| 222 | 176.0 | 1.7 | 2.7 | 1.55 | | 268.0 | 0.0 |
| 223 | 0.0 | 0.0 | 0.0 | 0.00 | @ | 269.0 | 0.0 |
| 224 | 0.0 | 0.0 | 0.5 | 0.00 | @ | 270.0 | 10.3 |
| 225 | 0.0 | 0.0 | 0.0 | 0.00 | @ | 271.0 | 0.0 |
| 226 | 0.0 | 0.0 | 0.0 | 0.00 | @ | 272.0 | 0.0 |
| 227 | 0.0 | 0.0 | 0.1 | 0.00 | @ | 273.0 | 3.0 |
| 228 | 0.0 | 0.0 | 0.0 | 0.00 | @ | 274.0 | 0.0 |
| 230 | 0.0 | 0.0 | 0.0 | 0.00 | @ | 277.0 | 0.0 |
| 232 | 0.0 | 0.0 | 2.6 | 0.00 | @ | 278.0 | 52.9 |
| 234 | 640.0 | 2.6 | 2.9 | 0.45 | | 280.0 | 0.0 |
| 235 | 146.0 | 0.7 | 1.3 | 0.87 | | 281.0 | 0.0 |
| 236 | 0.0 | 2.2 | 2.3 | 0.00 | @ | 282.0 | 45.3 |
| 237 | 42.0 | 0.4 | 0.4 | 0.99 | | 283.0 | 0.0 |

## I.3 REFERENCES FOR APPENDIX I


1. Viola, J. EEA Inc. Memo to the Distillation NSPS Docket. March 21, 1983. Sources and Values of data used in the economic screening for organic chemicals in the BID for Distillation NSPS.

2. Viola, J. EEA Inc. Memo to the Distillation NSPS Docket. April 27, 1983. Supplemental data for the screening analysis. Part 1.

3. Viola, J. EEA Inc. Memo to the Distillation NSPS Docket. April 27, 1983. Supplemental data for the screening analysis. Part 2.

4. EEA Inc. Documentation of the SOCMI MAXCOST Model. April 1982. Prepared for U.S. Environmental Protection Agency. Office of Air Quality Planning and Standards.

# TECHNICAL REPORT DATA

*(Please read Instructions on the reverse before completing)*

| 1. REPORT NO. | 2. | 3. RECIPIENT'S ACCESSION NO. |
|---|---|---|
| EPA-450/3-83-005a | | |

| 4. TITLE AND SUBTITLE | 5. REPORT DATE |
|---|---|
| Distillation Operations in Synthetic Organic Chemical Manufacturing Industry - Background Information for Proposed Standards | December 1983 |
| | 6. PERFORMING ORGANIZATION CODE |
| 7. AUTHOR(S) | 8. PERFORMING ORGANIZATION REPORT NO. |
| 9. PERFORMING ORGANIZATION NAME AND ADDRESS<br>Office of Air Quality Planning and Standards<br>Environmental Protection Agency<br>Research Triangle Park, North Carolina 27711 | 10. PROGRAM ELEMENT NO. |
| | 11. CONTRACT/GRANT NO.<br>DU-78-C132 |
| 12. SPONSORING AGENCY NAME AND ADDRESS<br>DAA for Air Quality Planning and Standards<br>Office of Air, Noise, and Radiation<br>U.S. Environmental Protection Agency<br>Research Triangle Park, North Carolina 27711 | 13. TYPE OF REPORT AND PERIOD COVERED<br>Interim Final |
| | 14. SPONSORING AGENCY CODE<br>EPA/200/04 |

15. SUPPLEMENTARY NOTES

16. ABSTRACT

Standards of Performance for the control of volatile organic compound emissions from distillation operations in the synthetic organic chemical manufacturing industry are being proposed under the authority of Section 111 of the Clean Air Act. These standards would apply to new, modified, and reconstructed distillation facilities. This document contains background information and environmental and economic impact assessments of the regulatory alternatives considered in developing proposed standards.

17. KEY WORDS AND DOCUMENT ANALYSIS

| a. DESCRIPTORS | b. IDENTIFIERS/OPEN ENDED TERMS | c. COSATI Field/Group |
|---|---|---|
| Air pollution<br>Pollution control<br>Standards of performance<br>Distillation operations<br>Volatile organic compounds<br>Synthetic Organic Chemical Manufacturing Industry | Air pollution control | 13B |

| 18. DISTRIBUTION STATEMENT | 19. SECURITY CLASS *(This Report)* | 21. NO. OF PAGES |
|---|---|---|
| Unlimited | Unclassified | 395 |
| | 20. SECURITY CLASS *(This page)* | 22. PRICE |
| | Unclassified | |