United States
Environmental Protection
Agency

Air And Radiation (ANR-460)
Research And Development
(MD-13)

EPA 520/1-91-010-1
May 1991

EPA

Radiation And Mixed Waste Incineration

Background Information Document Volume 1: Technology

Radiation And Mixed Waste Incineration

Background Information Document
Volume 1: Technology

Office of Radiation Programs

ORP

control technology center

ctc

Printed on Recycled Paper

EPA 520/1-91-010-1
May 1991

BACKGROUND DOCUMENT ON RADIOACTIVE AND MIXED WASTE INCINERATION

VOLUME I - TECHNOLOGY

Work Assignment Manager
Madeleine Nawar
Office of Radiation Programs
U.S. Environmental Protection Agency
401 M Street, S.W.
Washington, DC 20460

Prepared under:

Contract No. 68-D9-0170

Prepared for:

Control Technology Center
U.S. Environmental Protection Agency
Research Triangle Park, North Carolina 27711

DISCLAIMER

Mention of any specific product or trade name in this report does not imply an endorsement or guarantee on the part of the Environmental Protection Agency.

PREFACE

This project to provide technical guidance on radioactive and mixed waste (low-level radioactive contaminated waste) incineration was funded by the Control Technology Center (CTC). Work on this project was primarily directed and performed by EPA's Office of Radiation Programs (ORP). This cooperative effort was established to provide necessary technical expertise and funding to compile information needed by air pollution control agencies considering permits for these incinerators.

The CTC was established by EPA's Office of Research and Development (ORD) and Office of Air Quality Planning and Standards (OAQPS) to provide technical assistance to state and local air pollution control agencies. The two sponsoring organizations for the CTC are the Air and Energy Engineering Research Laboratory (ORD) and the Emission Standards Division (OAQPS). Three levels of assistance can be accessed through the CTC. First, a CTC HOTLINE has been established to provide telephone assistance on matters relating to air pollution control technology. Second, more in-depth engineering assistance can be provided when appropriate. Third, the CTC can provide technical guidance through the publication of technical guidance documents, development of personal computer software, and presentation of workshops on control technology matters. To access CTC services, call the CTC HOTLINE - (919) 541-0800 or (FTS) 629-0800.

Technical Guidance projects, such as this one, focus on topics of national or regional interest that are identified through contact with state and local agencies. In this case, the State of New Mexico contacted the CTC and requested technical assistance with regard to permit applications for mixed waste incinerators. It became evident that incineration of radioactive and mixed wastes is being considered or implemented as a waste volume reduction method at a number of facilities handling nuclear material. The CTC contacted ORP to discuss the possibility of a joint venture whereby CTC would provide funding and ORP would provide technical expertise and project management. This technical guidance document is the result of that cooperative effort.

ACKNOWLEDGEMENT

This document was prepared for EPA's Control Technology Center (CTC), Research Triangle Park, North Carolina, by the Office of Radiation Programs (ORP), with support from Sanford Cohen & Associates, Inc. (SC&A), of McLean, Virginia.

ORP wishes to thank the following individuals for their technical assistance and review comments on the drafts of this report: especially Bob Blaszczak (CTC Co-Chair), Jeff Telander (OAQPS), Irma McKnight (ORP-Program Management Office), Martin Halper (Director, Analysis and Support Division [ASD], ORP), Robert Dyer (Chief Environmental Studies & Statistics Branch, [ESSB] ASD, ORP), Ben Hull (ESSB/ASD), Lynn Johnson (ESSB/ASD), Hank May (EPA-Region 6, Radiation Programs), Stan Burger (EPA-Region 6, RCRA Permits Branch), Lewis Battist (ORP-ASD), Bill Blankenship, Gale Harms and Albion Carlson (New Mexico, Air Quality Bureau); and Stephen Cowan, Betsy Jordan and Leanne Smith (DOE-HQ, Office of Waste Operations, Environmental Restoration and Waste Management).

Table of Contents

Page

ABSTRACT xv

1. Overview of Radioactive and Mixed Waste Incineration Experience 1-1

1.1 Radioactive and Mixed Waste Characteristics 1-1

1.1.1 Low-Level Radioactive Waste 1-2
1.1.2 Transuranic Waste 1-6
1.1.3 Mixed Waste 1-7
1.1.4 Incinerable Waste 1-10

1.2 Combustion Process and Radionuclide Emissions 1-15

1.2.1 Radionuclide Airborne Emissions 1-15
1.2.2 Radiological Properties of Ashes and Residues 1-19

1.3 Incinerator Population 1-24
1.4 Operational Incinerator Emissions 1-36

1.4.1 DOE Incinerators 1-36
1.4.2 Commercial Incinerators 1-59
1.4.3 Institutional Incinerators 1-63
1.4.4 Studsvik Incinerator 1-65

1.5 Operations and Maintenance Practices and Procedures 1-67
1.6 Regulatory Requirements 1-68

1.6.1 Nuclear Regulatory Commission Licensing 1-68
1.6.2 Resource Conservation and Recovery Act (RCRA) Requirements 1-71
1.6.3 State Regulations 1-72

References 1-75

2. Technologies for Controlling Incinerator Processes and Radionuclide Emissions 2-1

2.1 Process Control Technology 2-1
2.2 Process Monitoring Technology 2-2
2.3 Emission Control Technology 2-8

Table of Contents (Continued)

Page

2.3.1 Removal of Particulates 2-15
2.3.2 Removal of Gases 2-22

2.4 Capital and Operating and Maintenance Costs 2-24
2.5 Operations and Maintenance Concerns 2-25

2.5.1 Pretreatment 2-25
2.5.2 Feed System 2-25
2.5.3 Combustion Chamber 2-26
2.5.4 Air Pollution Control System 2-28

2.6 Incinerator Effectiveness 2-31
2.7 Incinerator Reliability 2-33
References 2-35

3. Technologies for Monitoring Incineration and Radionuclide Airborne Emissions 3-1

3.1 Radionuclide Airborne Emissions Monitoring Technology 3-1

3.1.1 Stack Off-Gas Sampling Systems 3-2
3.1.2 Real-Time Radiation Monitoring Systems 3-14
3.1.3 Indirect Radiation Monitoring Methods 3-16
3.1.4 Instrumentation Detection Limits 3-18

3.2 Radiation Process Monitoring Technology Description, Principle of Operation, and Applications 3-25
3.3 Applicability of Non-Radioactive Emissions Stack Monitoring Methods to Radionuclides 3-26
3.4 Monitoring Radionuclide Concentration in Incinerator Ash 3-27
References 3-30

4. Consideration of Incinerator Accident and Abnormal Operation Scenarios 4-1

4.1 Example Analyses of Incinerator Accident Scenarios 4-4

4.1.1 Scientific Ecology Group 4-4
4.1.2 Rocky Flats 4-6

Table of Contents (Continued)

Page

4.1.3 Duke Power Company 4-8

References 4-14

5. Comparison of Incineration with Other Volume Reduction Technologies 5-1

5.1 Sorting 5-3
5.2 Shredding 5-3
5.3 Compaction 5-3
5.4 Supercompaction 5-4
5.5 Storage for Decay 5-4
5.6 Combustion 5-4

References 5-7

6. Summary 6-1

6.1 Report Objective 6-1
6.2 Incineration 6-1
6.3 Relevant Issues 6-4

6.3.1 Waste Acceptance Criteria 6-4
6.3.2 Incinerator Operations 6-6
6.3.3 Stack Monitoring 6-8
6.3.4 Radiological Risk Assessment 6-9
6.3.5 Airborne Radionuclide Emissions 6-10

Appendices

Appendix 1 NRC Incineration Guidelines for Material Licensees A1-1
Appendix 2 Nuclear Regulatory Commission Outline for Safety Related Topics Design and Operation of Low-Level Radioactive Waste Incinerator . A2-1
Appendix 3 Excerpts from Illinois Regulations A3-1
Appendix 4 Incinerator Control Functions A4-1
Appendix 5 Incinerator Monitoring Subsystems A5-1
Appendix 6 Cost Elements A6-1
Appendix 7 General Operations Problems and Preventive Maintenance Action . . A7-1

List of Tables

Table Numbers — Page

1-1 LANL Typical Low-Level Radioactive Waste Generation and Disposal Reflecting Past Cumulative Practices 1-3

1-2 LLW Generators That Incinerated Waste in 1984 1-5

1-3 Waste Form Distribution and Incineration Reported by Institutional Facilities 1-6

1-4 LANL Total Inventories of Retrievable TRU Waste Through 1987 1-8

1-5 Radionuclide Composition and Waste Mix of Buried and Retrievably Stored TRU Wastes Reflecting Past Practices at LANL 1-9

1-6 Approximate Distribution and Chemical Constituent Content of Mixed Waste Forms 1-11

1-7 Estimated Yearly Mixed Waste Volume and Mass Generation Rate by Physical Forms for LANL 1-12

1-8 Summary Characterization of Waste Volumes, Radiological Properties, and Inventory at LANL 1-14

1-9 Typical Distribution of Ash in Incinerator Components 1-20

1-10 Typical Radionuclide Distribution in Incinerator Ash 1-22

1-11 Status of Selected U.S. Radioactive and Mixed Waste Incinerators 1-33

1-12 International Operational Large Scale Incinerators 1-35

1-13 Rocky Flats Fluidized-Bed Incinerator Emissions 1-39

1-14 Rocky Flats Fluidized-Bed Incinerator Stack Radionuclide Concentrations 1-39

1-15 LANL TRU Controlled Air Incinerator Emissions 1-41

List of Tables (continued)

Page

1-16 LANL TRU Controlled Air Incinerator Stack Radionuclide Concentrations 1-41

1-17 LANL Bldg-37 (Including CAI) Pu-239 Stack Releases 1-43

1-18 LANL Bldg-37 (Including CAI) Mixed Fission Products (Beta) Stack Releases 1-44

1-19 LANL Controlled Air Incinerator Radioactive Throughputs 1-46

1-20 Oak Ridge TSCA Incinerator Emissions and Waste Feed Radioactivity for 1988 1-47

1-21 Oak Ridge TSCA Incinerator Stack Radionuclide Concentrations 1-48

1-22 Brookhaven National Laboratory Low-Level Radioactive Waste Emissions 1-49

1-23 Brookhaven National Laboratory Low-Level Radioactive Waste Monthly Incinerator Emissions for 1987-1989 1-50

1-24 Brookhaven National Laboratory Low-Level Radioactive Waste Incinerator Stack Concentrations 1-52

1-25 Idaho Engineering Laboratory WERF Incinerator Emissions 1-52

1-26 Idaho Engineering Laboratory WERF Incinerator Monthly Emissions and Processed Waste Volumes 1-54

1-27 Idaho Engineering Laboratory WERF Incinerator Low-Level Radioactive Waste Radionuclide Concentrations 1-55

1-28 Idaho Engineering Laboratory WERF Incinerator Stack Concentrations 1-57

1-29 Idaho Engineering Laboratory WERF Incinerator Overall Decontamination Factor 1-57

1-30 Savannah River Site Beta-Gamma Incinerator Emissions 1-58

List of Tables (continued)

Page

1-31 Savannah River Site Beta-Gamma Incinerator Processed Waste Volume and Activity: 1986-1988 1-60

1-32 SEG Incinerator Waste, Emissions, Ash Radionuclide Distribution for 1989 1-61

1-33 SEG Incinerator Atack Wmissions - 4th Quarter 1989 1-62

1-34 Advanced Nuclear Fuels Solid and Liquid Waste Volumes and Uranium Mass 1-64

1-35 Effluent Release Rates for Low-Level Radioactive Waste Incinerators - 1984 1-66

1-36 Radionuclide Emissions from the Swedish Studsvik Incinerator Facility 1-66

2-1 Incineration System Control Functions 2-3

2-2 Incinerator Monitoring Subsystems 2-9

3-1 Summary of Stack Monitoring System Response 3-19

4-1 Activity Releases - Worst Case Accidents Duke Power Company Incinerator 4-9

5-1 Volume Reduction Factors of Selected Technologies 5-6

List of Figures

Figure Numbers		Page
1-1	The Los Alamos Controlled Air Incinerator	1-25
1-2	The Oak Ridge Toxic Substances Control Act Incinerator	1-26
1-3	The Rocky Flats Fluidized Bed Incinerator	1-27
1-4	The INEL Waste Experimental Reduction Facility	1-28
1-5	The Savannah River Beta-Gamma Incinerator	1-29
1-6	The INEL PREPP Incinerator	1-30
1-7	The Scientific Ecology Group Incinerator	1-31
3-1	Typical Radioactive Airborne Emission Sampling System	3-4
3-2	Conceptual Diagram Showing Stack Monitor Location and Sampling Layout	3-5
3-3	Typical EPA Particulate Airborne Emission Sampling System	3-7
3-4	Typical EPA Volatile Organic Sampling System	3-8
3-5	Typical Isokinetic Sampling Probe	3-10
5-1	Volume Reduction Logical Process	5-2
6-1	Generic Incineration Flowsheet	6-3

Exhibits

1	Combustible Mixed Waste Volumes
2	Barnwell Rate Schedule
3	Half-Lives of Selected Radionuclides

ABSTRACT

This background document, consisting of Volume I - Technology and Volume II - Risks of Radiation Exposure, was prepared for the EPA Office of Radiation Programs as part of an EPA Control Technology Center project to assist the State of New Mexico Environmental Improvement Division/ Air Quality Bureau. It provides a broad look at technology issues surrounding the incineration of radioactive and mixed wastes. It is intended to highlight major considerations and to provide direction that would enable the reader who must deal in depth with incineration to focus on and seek specific information on concerns appropriate to a particular situation. It is not a comprehensive text on incinerator design, use, or regulation. The information presented in this report was gathered by telephone contacts with operators of existing incinerators, site visits, agency contacts, and literature searches. This report presents a distillation of the material deemed to be most relevant; it includes only a small fraction of the total amount of information collected. Wherever possible, actual operating data have been used to illustrate principles, however, inconsistencies in operational data acquisition have resulted in very limited availability of data that can be used for general assessment or purposes of comparison. Even though the existing data base on operations and resulting emissions and ash residues from radioactive waste incinerators is still quite small, it has been demonstrated that incineration can achieve significant volume reductions for radioactive waste. Individual incinerator design characteristics and the specific waste stream to be processed will significantly affect the comparison of the benefits to be gained from volume reduction versus the associated costs and risks from emissions and ash residue.

1. Overview of Radioactive and Mixed Waste Incineration Experience

1.1 RADIOACTIVE AND MIXED WASTE CHARACTERISTICS

Providing a detailed description of the complete spectrum of radioactive and mixed wastes generated in the United States is beyond the scope of this project. Therefore, this section provides only an overview of radioactive and mixed wastes. Most, but not all, of the data presented focus on waste generated at the Los Alamos National Laboratory (LANL) in support of U.S. Department of Energy (DOE) defense and research related activities, and by facilities included in surveys conducted by the Conference of Radiation Control Program Directors (CRCPD) and the University of Maryland.

The emphasis on LANL waste derives from the project objective to assist the State of New Mexico. It should be noted that the quantities and types of waste generated DOE-wide can not be inferred from LANL waste information. Further, the emphasis on LANL has no implication relative to its contribution to the total volume of DOE waste. DOE is currently collecting information on the volumes of combustible waste generated at each DOE site. A preliminary summary of combustible mixed waste volumes is shown in Exhibit 1. Finally, it should be noted that, although not yet fully operational, the Toxic Substances Control Act (TSCA) Incinerator at Oak Ridge is DOE's principal incineration activity.

For this report, waste is broadly characterized as low-level radioactive waste (LLW), transuranic (TRU) waste, and mixed waste. This characterization is not intended to represent current activities, but rather to provide perspective on the different types of chemical and physical forms, radionuclide distribution, radioactivity levels, and quantities based on past aggregate practices. The types of waste which are routinely generated do in fact vary greatly depending on the type of research, production, and cleanup activities that may be typically undertaken at a given facility. The data reflect past practices in an aggregate form rather than on a yearly generation rate basis.

1.1.1 Low-Level Radioactive Waste

Low-level radioactive waste is normally acceptable for disposal in a land disposal site. By definition, low-level radioactive waste does not include high-level radioactive waste, spent fuel elements or rods, transuranic waste, and uranium and thorium tailing waste. Low-level waste may contain a number of mixed fission products, typically about 100 different radionuclides, depending on the radiological half-life, radioactive decay, and initial amounts present. Waste may contain long-lived radionuclides, such as strontium-90, technetium-99, iodine-129 and tritium. Short-lived nuclides such as iodine-131 may also be present.

The typical LLW volume and radionuclide distributions at LANL are shown in Table 1-1. Dry solids, decontamination debris, and contaminated equipment, in decreasing order, make up nearly 96 percent of the total waste volume. Over 99 percent of the total activity is contained in dry solids, decontamination debris, and in unspecified waste forms. Reported radionuclides include primarily tritium (95.8 percent) and fission products (1.7 percent), with the balance comprising uranium, thorium, and alpha emitters with concentrations of less than 100 nanoCuries/gram. Equivalent data for other DOE sites can be found in "Integrated Data Base for 1989: Spent Fuel and Radioactive Waste Inventories, Projections, and Characteristics" (DOE89).

In 1982 and 1984, the Conference of Radiation Control Program Directors (CRCPD) surveyed the low-level radioactive waste disposal practices, including incineration, of nearly all radioactive material licensees in the United States (CRC84). Licensees were asked to report the volume and activities of waste disposed of and incinerated in those years. Individual survey forms were obtained and used in the preparation of this report.

Table 1-1. LANL typical low-level radioactive waste generation and disposal reflecting past cumulative practices (a)

Physical Form	Percent of Total Volume	Percent of Total Activity
Contaminated equipment:	14.0	0.4
Decontamination debris:	22.0	30.3
Dry solids:	60.6	50.0
Solidified sludge:	3.1	0.0
Other forms or not classified:	0.2	19.3
Radionuclides		
Uranium/Thorium:	--	0.02
Fission Products:	--	1.7
Tritium:	--	95.8
Alpha (less than 100 nCi/g):	--	0.4

(a) Extracted from Tables 4.4, 4.6, and 4.7, DOE/RW-0006, Rev. 5, Nov., 1989 (DOE89).

(b) Only principal items listed, in order of importance.

The CRCPD survey defined 60 categories of licensees. However, many of these did not incinerate waste. For this summary, the 60 categories were aggregated into 10, as shown in Table 1-2. The volumes, nuclides and types of waste reported as incinerated by these licensees are also shown in Table 1-2. The average volume of waste incinerated was 1,600 cubic feet per licensee. Most of the volume was reported by nuclear fuel fabricators. Five such facilities reported incinerating 183,000 cubic feet, with one facility responsible for 130,000 cubic feet. The activity contained in such waste was principally from uranium radionuclides. Facilities classified as academic (research and education) incinerated over 21,000 cubic feet of low-level radioactive waste in 1984. Four hospital categories combined incinerated an estimated 33,000 (adjusted) cubic feet of waste. The categories of private research and development, and manufacturing each accounted for approximately 11,700 cubic feet of incinerated waste.

A survey conducted in 1979 by the University of Maryland revealed that 45 out of 142 licensed institutional facilities routinely incinerated radioactive wastes (EGG80). The facilities surveyed included hospitals (16.9 percent), hospitals combined with medical schools and universities (48.6 percent), medical schools only (7.7 percent), medical schools and universities (16.9 percent), and universities only (9.9 percent).

In the University of Maryland survey, waste forms routinely incinerated were characterized in eight categories (see Table 1-3). The survey breakdown indicates that essentially all facilities incinerate animal or other forms of biological wastes. It is not uncommon for such facilities to incinerate two or more different waste forms; hence, the cited values need not add up to 100 percent. Scintillation fluids and vials typically make up less than 18 percent of the waste being incinerated. Aqueous and organic liquid wastes were cited by 13 and 11 percent of the facilities surveyed, respectively.

Table 1-2. LLW generators that incinerated waste in 1984(a)

Category	Volume Incinerated(ft^3) Average	Range	Principal Nuclides	Waste Types(b)
Nuclear Fuel Fabricators	36,500	434-1.3 x 10^5	U-235, U-238	Trash & Solids
Hospitals/Clinics/ Private Offices	300	1-4,903	C-14, H-3, I-125	Trash & Solids, Liquid Scint., Animal Carcasses
Medical Research Hospitals	440	1-3,900	H-3, C-14	Trash & Solids, Animal Carcasses, Liquid Scint.
Academic (Research and Education)	449	1-1,198	H-3, C-14, S-35, P-32	Trash & Solids, Animal Carcasses, Liquid Scint.
Medical Laboratories	32	1-150	I-125, H-3	Liquid Scint.
VA and Federal Hospitals	579	2-5,177	H-3, C-14, S-35	Trash & Solids, Animal Carcasses, Liquid Scint.
State Hospitals	142	12-579	H-3, C-14	Animal Carcasses
State & Federal -- Non-medical	449	8-1,008	H-3, C-14	Liquid Scint., Trash & Solids
Private R&D	345	6-2,200	C-14, H-3, S-35	Animal Carcasses, Liquid Scint., Trash & Solids
Manufacturing	1,342	8-7,800	H-3, C-14, I-125, U-238	Animal Carcasses, Liquid Scint.
All	1,594	1-1.3 x 10^5	----	-----

(a) Values are as reported and are not adjusted for the survey response rate. Source: CRCPD Survey, DOE/ID/12377, 1984 (CRC84).

(b) Only principal items listed, in order of importance.

Table 1-3. Waste form distribution and incineration reported by institutional facilities(a)

Waste Forms Incinerated	Percent of Respondents That Incinerated This Form
Free scintillation fluids	11.1
Empty scintillation vials	4.4
Full scintillation vials	17.8
Other organic liquids	11.1
Aqueous liquids	13.3
Animal carcasses/other biological wastes	95.6
Dry solid waste	28.8
Other waste-not specified	17.8

(a) Practices characterizing 45 out of 142 surveyed facilities. Extracted from Appendix C, EGG-WM-5116, April 1980 (EGG80).

1.1.2 Transuranic Waste

The EPA standards (40 CFR Part 191) define transuranic waste (TRU) as containing more than 100 nanoCuries/gram of alpha-emitting transuranic isotopes, with half-lives greater than 20 years (EPA89). The alpha emitting isotopes of plutonium, curium, americium, and neptunium found in transuranic waste present a hazard because of their long radiological half-lives and potential chemical toxicity. Most radionuclides contained in TRU waste are typically present at low concentrations (DOE89, EPA89). Although a few decay products have energetic gamma, beta and neutron emissions, their most significant hazard is due to alpha radiation emissions.

In contrast to other radioactive waste, TRU waste includes liquid and solid materials with widely varying chemical and physical properties. Most TRU waste is classified as "contact-handled" (CH) TRU waste, i.e., it has a surface dose rate of less than 200 milliRoentgen per hour (mR/h) or less, and can be handled with just the shielding that is provided by the waste package itself. A smaller volume (2.5 percent) may be contaminated with sufficient beta, gamma, or neutron

activity to require remote handling. This waste is categorized as "remote-handled" (RH); i.e., it has a surface dose rate of greater than 200 mR/h.

The estimated inventories of retrievably stored TRU waste at LANL are shown in Table 1-4. The total amount and activity in contact handled waste is greater than that of RH waste by nearly three orders of magnitude. The bulk of the waste consists of noncombustible materials, combustibles, and absorbed liquids or sludges. These waste forms are more predominant in CH waste and are about equally divided between stored and newly generated waste.

The radionuclide compositions of various TRU waste buried or retrievably stored at LANL, sorted by DOE waste mixes, are given in Table 1-5. The waste mixes represent variations in waste compositions based on the total amount of the waste volume placed in storage and generated. The DOE literature does not identify the source of waste according to origin or process. Four radionuclides make up essentially all of the waste activity. These radionuclides, in decreasing order, are plutonium-239, americium-241, uranium-235, and uranium-238. Mixed fission products make up a small fraction of the total activity. The remaining radionuclides (plutonium-238, plutonium-240, plutonium-241, and other unspecified nuclides) make up less than a few percent of the total inventory. Again, equivalent data for other DOE sites can be found in the report, "Integrated Data Base for 1989: Spent Fuel and Radioactive Waste Inventories, Projections, and Characteristics" (DOE89).

1.1.3 Mixed Wastes

By definition, mixed waste contains radioactivity as well as chemical hazardous constituents. Such waste is in physical or chemical forms which do not readily allow the separation of the radioactive and nonradioactive species. Mixed waste is subject to the Atomic Energy Act (AEA) and the Resource Conservation and Recovery Act (RCRA) and is primarily governed

Table 1-4. LANL total inventories of retrievable TRU waste through 1987(a)

Quantity and Activity	Contact Handled	Remote Handled
Volume (m3):	7,452	11.1
TRU Mass (Kg):	542	0.7
Alpha Activity (Ci):	187,717	63

Waste Composition(%)	Contact Handled		Remote Handled		Buried
	Stored	New	Stored	New	
Absorbed liquids or sludge	22	10	--	--	4
Combustibles	8	25	50	50	7
Concrete or cemented sludges	36	15	--	--	44
Soil, gravel, or asphalt	--	1	--	--	30
Filters or glass media	4	1	--	--	2
Glass, metal, or similar non-combustibles	30	48	50	50	13

(a) Extracted from Tables 3.5 and 3.7, DOE/RW-0006, Rev. 5, Nov., 1989 (DOE89).

Table 1-5. Radionuclide composition and waste mix of buried and retrievably stored TRU wastes reflecting past practices at LANL(a)

	Radionuclide Composition (weight percent) Sorted By Waste Mix Designation(b)(c)							
	Contact Handled					Remote Handled		Buried
Radionuclides	1	2	3	4	5	7	8	10
U-235:						47	47	
U-238:						28	28	5
Pu-238:	5	0.5	1.2	0.5				1
Pu-239:	92	21.5	98.8	93.0	100	22.7	22.7	91
Pu-240:						2.1	2.1	
Pu-241:						0.2	0.2	
Am-241:	3	78		6.5				3.3
Mixed fission products:						(d)	(e)	
Others:								0.69

(a) Extracted from Table 3.8, DOE/RW-0006, Rev. 5, Nov., 1989 (DOE89). The designation of "waste mix" is used by DOE to differentiate between batches of wastes of varying compositions.
(b) For radionuclides that are either >1 percent by weight, or >1 percent by activity compared to the total.
(c) Mixes represent major variations in waste composition based on the total of the volume in storage and generated.
(d) Trace amounts by weight-percent, but comprises 85 percent of the activity.
(e) Trace amounts by weight-percent, but comprises 95 percent of the activity.

by EPA regulations under 40 CFR Parts 260, 262-265, 268, and 270 (EPA87). Section 6001 of RCRA explicitly subjects all Federal facilities and their activities to State and Federal regulations under RCRA. However, RCRA Section 1006(a) relieves facilities operating under the authority and control of the AEA from compliance with RCRA for conditions which would be inconsistent with the requirements of the AEA.

As with the other waste forms described earlier, the presence of organic compounds and metals in mixed waste will vary significantly from year to year. Accordingly, the following description is given to illustrate, not to characterize, LANL practices for a specific time period. Table 1-6 indicates that most of the mixed waste at LANL consists of solidified materials, solutions, combustibles, and metals, representing over 90 percent of the total waste by weight. Mixed waste constituents also vary over a wide range of concentrations. Organic compounds, which may include halogenated solvents, polymers, liquid scintillation cocktails, lathe coolants, degreasers, and oils, vary from a few to several hundred thousand ppm. Metals are reported at still higher concentrations, up to one million ppm. It should be noted that the data shown in Table 1-6 represent default mixed waste characteristics for developing waste acceptance criteria for the Waste Isolation Pilot Plant (DOE90).

1.1.4 Incinerable Wastes

The preceding information characterized in a general way the radioactive and mixed wastes generated or stored at LANL in support of DOE defense and research related activities. To provide a more in-depth understanding of the types and quantities of waste forms which will be incinerated, the following focuses on the types of waste which are known to be targeted for incineration at LANL.

The characterization is based on several compilations of data gathered by DOE low-level and mixed waste task groups, including a survey of DOE facilities that currently use incinerators or plan to install new ones (EGG88, DOE89, HUT90). As noted before, the actual distributions of waste volumes and properties may change because of DOE's current activities associated

Table 1-6. Approximate distribution and chemical constituent content of mixed waste forms (a)

Waste Form(b)	Typical Distribution: Waste Form Quantity (wt-%)	Typical Distribution: Chemical Constituent Concentration (mg/Kg)[c]
Cemented and uncemented aqueous:	36	10 - 700
Cemented and uncemented organics:	10	50,000 - 150,000
Immobilized process and laboratory solids:	1	10 - 200
Combustibles:	20	750 - 2,000
Metals:	25	1,000,000
Spent Filters:	6	50 - 150
Inorganic solids:	1	100 - 8,000
Leaded rubber:	1	600,000

(a) Extracted from Tables B.3.1 and B.3.2, DOE/EIS-0026-FS, Vol. 2, Jan. 1990 (DOE90).
(b) Chemical constituents typically include trichloroethane, carbon tetrachloride, trichloro- and trifluoethane, methylene chloride, methyl alcohol, xylene, butyl alcohol, acetone, toluene, PCBs, NaOH, etc. Metals typically consist of cadmium, lead, etc.
(c) Units represent mg of chemical constituents per Kg of waste form.

activities associated with the Environmental Restoration Program. Also, DOE is in the process of revising its low-level and mixed waste acceptance criteria; a similar revision is being done for TRU waste (HUT90). Accordingly, the following characterization gives only a snapshot description of low-level and mixed waste disposal and treatment practices at LANL.

The current yearly mixed waste generation rates are given in Table 1-7 based on 1989 Department of Energy data for LANL (HUT90). A review of Table 1-7 indicates that 305,000 lbs/yr, or nearly 50 percent by mass, of the waste is generated in a liquid form. About 35 percent of the total waste quantity is identified as mixed waste. An additional source of waste, not identified in this table, is contaminated soil; however, no data were provided about its volume, quantity, and combustibility. LANL estimates that about half of its waste is currently in a combustible form (EGG88).

Under a new low-level and mixed-waste management program, LANL plans to establish onsite treatment capabilities, increase treatment capacities to meet newly anticipated requirements, separate TRU from non-TRU waste treatment processes, and develop more comprehensive waste acceptance criteria (waste acceptance criteria have been established by DOE to regulate its overall waste management activities and programs) to handle new or additional LANL waste streams (DOE89a, EGG88). Some of these wastes are targeted for incineration.

The waste forms and volumes or quantities for LANL are given in Table 1-8. The total low-level waste volume inventory is 4,373 m^3, which consists of 3,052 and 1,321 m^3 of alpha and beta/gamma wastes, respectively. Mixed waste is comprised of 175 m^3 of solid materials and 3,700 gallons of liquids. The primary radionuclides are reported to be isotopes of plutonium, americium, curium, and tritium and carbon-14. Some fission products, such as strontium, are also present in unspecified quantities. The reported concentrations are cited relative to established limits as defined by the DOE waste acceptance criteria. For example, the limit for solid wastes is expressed in terms of exposure rate; i.e., less than 10 mr/h. Alpha emitters are expressed in terms of TRU concentration; i.e., less than 100 nanoCuries/gram. The maximum radioactive concentrations for liquids are given as less than 0.1 microCurie/liter as total activity, which is interpreted to apply only to beta/gamma emitter radionuclides.

Table 1-7. Estimated yearly mixed waste volume and mass generation rate by physical forms for LANL[a]

Waste	Forms		Volume (Ft^3/yr)	Quantity (Lbs/yr)
SOLID:				
LLW DAW	Not RCRA		15,000	112,000
LLW	Biological		600	11,000
Mixed LLW	Solids		29,000	220,000
Mixed LLW	Uranium		350	18,000
		Total:	44,950	361,000
LIQUID:				
Mixed	Scint. fluid		500	5,000
LLW oils	Not RCRA		4,600	260,000
Grease	Not RCRA		700	40,000
		Total:	5,800	305,000

(a) Extracted from Table I: Los Alamos Combustible Radioactive and Mixed Waste Characterization (HUT90).

LLW = Low-Level Waste

DAW = Dry Active Waste

Table 1-8. Summary characterization of waste volumes, radiological properties, and inventory at LANL(a)

Characteristics	Volume or Quantity(b)	Radiological Properties(c)
Total LLW volume (m^3):	9,436	--
Combustible fraction of LLW:	0.46	--
Low-level Combustible total volume (m^3):	4,373	--
TRU:	3,052	<0.1 uCi/g
Beta/gamma:	1,321	<10 mr/h.
Mixed waste:		
Solids (m^3):	175	<0.1 uCi/g
Liquids (gal.):	3,700	
Total activity:	--	<0.1 uCi/L
Total TRU:	--	<0.1 uCi/g

(a) Extracted form Table 2-1, EGG-LLW-8269, October 1988 (EGG88).
(b) All values are rounded off.
(c) Primary radionuclides are reported to be Pu, Am, Cm, H-3, C-14, and fission products, such as Sr, and Ce.

1.2 COMBUSTION PROCESS AND RADIONUCLIDE EMISSIONS

1.2.1 Radionuclide Airborne Emissions

Waste may be introduced into an incinerator in a bulk material (e.g., as boxes, bags, or drums), shredded, in a sludge form (e.g., slurry), or injected as liquid (EGG88). The feed rate is governed by the combustible nature of the material and by the introduction of an additional source of fuel. Sometimes the waste, if in a liquid form, may be introduced as a mixture of fuel and waste. The waste/fuel ratio is determined by the combustion properties of the waste and incinerator capacity. The considerations noted above apply generally to all waste forms (mixed and low-level wastes) introduced into incinerators. As combustion occurs, oxygen is consumed and the combustion gases are entrained in the afterburner. The proper combustion conditions are maintained by controlling the amount of air, waste feed rate, and temperature. Special attention is given to the residence time in order to ensure that complete oxidation occurs and that the air/fuel mixing is also adequate for total combustion.

Eventually, combustion gases, suspended particulates, fumes, and products of incomplete combustion are entrained in exhaust scrubbers and filtration devices before being released from the stack. The chemical and radioactive constituents of the off-gas can vary significantly from those of the input waste. The combustion process does not destroy trace metals or radioactivity, nor does it change the rate of radioactive decay, but rather it changes only the chemical and physical forms of the radionuclides.

The most often encountered radionuclides, tritium, carbon, and iodine, are generally released with little or no retention in the incinerator. Such radionuclides form gases which retain their radioactivity. Semivolatile elements, for example lead, polonium, sulfur, cesium, mercury, and phosphorus, may, under oxidizing and reducing conditions, form volatile fumes even at moderate combustion temperatures. At elevated temperatures, hydrochloric acid (HCl) produced from the burning of polyvinyl chloride, metals, and metal oxides present in the waste may become volatilized to various degrees (TRI89, RIN_, BAR_). The temperatures at which elements are

classified as volatile or semivolatile are dependent on the chemical form of the element and its residence time in the combustion chamber. The amounts of trace metal or metal oxides volatilized depend on the partial pressures of O_2, HCl, and H_2O, the waste feed rate, the particle surface area, and off-gas flow rate. Longer residence times, normally required for the destruction of organic compounds, result in greater formation of metal oxide fumes (TRI89). These fumes, generally less than 0.1 um in size, are usually exhausted out of the stack because of their small size. Radionuclides that volatilize at higher temperatures will also become entrained in their vapor form and coalesce as particulates at cooler temperatures. Such radionuclides will condense onto suspended particles present in the exhaust stream forming radioactive particulates which may have higher specific activities than the waste itself.

This process, known as enrichment, depends largely on the individual radionuclide, its behavior at oxidizing temperatures and particle size distribution in the exhaust stream (UNS82, TRI89, GAL__). This process reflects the depletion of certain elements in the settling ash, the higher surface to volume ratio of the fumes, and the surface reactivity of the fumes. For example, coal combustion in a coal-fired boiler has revealed varying enrichment factors, ranging from 1 to 2 for radium, uranium, or thorium. Higher enrichment factors were observed for lead-210 and polonium-210, typically ranging from 1 to 11 (UNS82).

Volatilized radionuclides may be readily removed from the off-gas prior to discharge into the atmosphere by simply cooling the gases. Cooling causes the vapor to condense out of the airstream and onto surfaces or into components. This deposition process is beneficial since it reduces stack emissions, but is also detrimental since it may result in radionuclide deposition in undesirable parts of the off-gas treatment system. Preferably, the deposition should occur in scrubbers, filters, or components designed for the collection and removal of fly-ash or fume residues. For TRU waste, the accumulation of fissile radionuclides at specific locations may present a criticality problem (the condition in which a nuclear reaction is just self-sustaining) (CAR_). However, given the relatively low concentration of TRU waste, criticality safety should not normally be a concern (IAE89).

Off-gas treatment typically involves passing the hot flue gases into a series of components to remove suspended particulates, gases, and radionuclides. Such systems typically include heat-exchangers, filters and separators, high efficiency particulate air (HEPA) filters, and adsorbers. Other forms of off-gas cooling include quenching by water injection and dilution by introducing air at ambient temperature. Particulate emissions, depending on particle sizes and exhaust velocity, are trapped in heat-exchangers, filters or electrostatic separators.

Typically, large particles, which are too heavy to be entrained by the exhaust stream, settle onto surfaces or are trapped by the filters and electrostatic separators. As noted earlier, as the temperature cools, vapors condense out of the airstream and deposit or impinge onto surfaces. Smaller particles are entrained in the exhaust stream because of their smaller size and mass. HEPA filters are designed to remove small particles, typically with a collection efficiency of 99.97 percent for 0.3-um diameter particles (ERD76). HEPA filters may be installed in tandem with two or more units in series and are usually placed before the carbon adsorbers. Pre-filters are also placed before the HEPA filters to prolong their useful lives.

Vapors and gases that have not condensed out of the airstream may be collected by using adsorbers; e.g., carbon filters, which may be treated with potassium iodide (KI) or triethylenediamine (TEDA) for improved collection efficiency, typically ranging from 95 to 99 percent (ERD76). Depending on the application, a second set of HEPA filters may be installed beyond the carbon filters to trap what is known as "carbon fines," which may be released from carbon granules. Carbon fines may contain elevated radionuclide concentrations. Sometimes wet scrubbers are also installed to trap acid or organic vapors (HCl, HF, NH_3, SO_x, and NO_x) from the exhaust stream. If wet scrubbers are installed, they are usually followed by demisters and driers, which remove water vapors from the exhaust stream. Excess water vapors tend to saturate HEPA filters and carbon adsorbers, rendering them totally ineffective.

These off-gas components, when installed as one engineered system, can provide very high collection efficiencies. The system reliability depends on how the system is operated and maintained. The overall collection efficiency is also nuclide-dependent; for example, it is lower

for cesium than for plutonium. Operating experience indicates that the overall collection efficiencies of systems range widely. In a survey of operating facilities, an International Atomic Energy Agency (IAEA) report cites efficiencies, expressed in terms of overall decontamination factor (DF), ranging from as low as 10 to as high as 10^7 (IAE89). (For treatment of hazardous materials, incinerators are rated in terms of destruction and removal efficiencies, or DREs. The DRE is an inappropriate concept for radioactive materials, since radiation is not destroyed by the incineration process.) The DF is expressed as the ratio of the amount of radioactivity introduced in the incinerator to the amount that is observed on the exit side of the final off-gas treatment system component (e.g., HEPA filter or carbon adsorber). A cluster of DFs were noted ranging from 10^5 to 10^6. A few facilities reported overall DFs ranging from about 10 to 10^4. It should be noted that the cited DFs represent different types of incinerator systems, incinerators with different capacities, and varying waste forms and radionuclide concentrations. Finally, not all systems were similarly equipped with off-gas treatment systems. Some facilities were equipped with more elaborate off-gas treatment equipment than others.

Actual airborne radionuclide emissions are also known to vary for the reasons given above. In addition, many incinerators process waste with radiological and physical properties that vary as a function of time. Accordingly, it is difficult to characterize emissions in generic terms. A general perspective on the type and extent of airborne emissions can, however, be obtained from operating facilities. Unfortunately, little information exists that directly compares the radiological properties of the waste introduced in the incinerator with actual airborne emissions. Typically, data only summarize airborne emissions on a yearly basis, with no correlation with waste throughput.

1.2.2 Radiological Properties of Ashes and Residues

The volume reduction of low-level radioactive waste in an incinerator results in higher concentrations of radioactivity and higher radiation levels in the end product, ash, when compared to the feed material. System design (including building layout where appropriate) should minimize personnel interaction with equipment and vessels that contain ash. Shielding of ash collection bins and other ash handling equipment may also be needed.

The bulk of the feed material is consumed during the combustion process while a change in the chemical form of the waste occurs. As the material is oxidized, certain compounds are formed, typically sulphates, chlorides, fluorites, nitrates, phosphates, and metal oxides, depending upon the waste. In a rotary kiln, for example, as the combustion process occurs, the ashes are collected at the bottom of the kiln and the rotation of the kiln forces the ash to collect in collection bins. Some of the ash, however, is entrained with the off-gas and settles or collects in various parts of the off-gas treatment system. The deposition of ash in various parts of the system is dependent upon off-gas velocity, particle size and density, combustion process, residence time, and the type of treatment system components; e.g., filters, electrostatic separators, scrubbers, HEPA filters, carbon adsorbers.

The distribution of ash in various incinerator components is shown in Table 1-9. The bulk (91 to 94 percent) of the ash is retained in collection devices at the point of combustion. Smaller amounts are retained in other sections of the incinerator system, such as the post-combustion chamber (2-4 percent), filter bags (1.5-5.2 percent), and cyclone (1-3 percent). Minimal amounts, less than 2 percent, are retained on HEPA filters, cooling coils, and diffusers, and other unspecified locations.

Table 1-9. Typical distribution of ash in incinerator components(a)

Components	Range of Distribution (percent)
Ash collection bin	91 - 94
Post-combustion chamber	2 - 4
Bag Filters	1.5 - 5.2
Cyclone	1 - 3
Diffuser	~ 0.5
Heat Exchangers	~ 0.4
HEPA filters	~ 0.6
Other miscel. locations	0.04 - 2

(a) Extracted from IAEA Technical Report Series No. 302, Appendix A, 1989 (IAE89).

The deposition of ash in various parts of the incinerator, other than in ash bins, is a potential problem since the ash must be periodically removed. Because ash contains radioactivity, now present at a higher specific activity, ash removal and handling must be performed under controlled conditions. However, for some volatile radionuclides (e.g., tritium and iodine-125), the ash may contain only trace amounts or no radioactivity at all. Usually ash handling is performed remotely, via a ram or conveyor, and the operator is separated from the ash by a physical barrier. The ash is removed following an appropriate cool down period. The process is also performed with proper ventilation to keep the ash from being dispersed in the immediate area or from being resuspended. The ash may be discharged into a glovebox and chute connected to a drum. Ash may be dumped directly into its disposal containers or processed; e.g., via cement, bitumen, or thermosetting resin solidification followed by packaging.

The amount of ash produced depends on the physical and chemical properties of the waste. For the type of waste to be processed by the LANL incinerator, volume-reduction ratios of about 10 to 25 are anticipated (NRC83). The ashes typically consist of fine (80-90 percent) and coarse (clinkers) material (10-20 percent). The density of fines and clinkers varies from about 0.9 to

3.0 g/cm^3. The chemical composition of ash fines varies as well, but typically consists of oxides and carbon compounds. Oxides include SiO_2, Al_2O_3, CaO, TiO_2 and lesser amounts of Fe_2O_3, K_2O, MgO, Na_2O, and P_2O_5 (NRC83). Oxides may make up about half of the total ash, by weight. The balance may be comprised of carbon compounds, chlorine, other metal oxides, and refractory material.

Ash particle sizes vary from relatively large to small diameters. About three -quarters of the ash particle sizes cluster around a 500- to 10-um particle diameter. Only a few particles are above 500 or below 10 um in size. Ashes from solid and liquid wastes show only a small difference in particle size. The following provides a breakdown of particle sizes for two types of waste streams (RFP82):

Particle size Range (um)	Weight % Distribution Solids	Liquids
> 1000	2	2
1000-500	6	3
500-100	20	10
100-20	32	55
20-10	25	22
10-5	10	5
5-0.5	4	2
< 0.5	<1	<1

Clinkers are typically several inches in length or diameter and at times may be found fused together in large chunks. They are formed during the combustion of rubber, plastic, wood, or resins, etc. Clinkers may appear very sooty, and are also usually porous, about 30 to 50 percent porosity. Again, these properties may vary depending on the nature of the waste initially introduced into the incinerator.

The radiological properties of ash depend on the initial amounts of radioactivity present. As discussed, volatile radionuclides will not remain in ash residues. Because of the volume reduction normally encountered, ash will have higher specific activities. Radionuclide

concentrations may range from nondetectable levels to very high concentrations which require special handling procedures. Other than the Toxicity Characteristic Leaching Procedure (TCLP) test to simulate leaching of eight metals (including lead, cadmium, mercury, chromium, and barium) four pesticides, two herbicides, and 25 organic compounds (EPA90), ash is generally believed to be free of other hazardous material properties. The distribution of radioactivity in ashes is shown in Table 1-10 for a number of radionuclides.

Table 1-10. Typical radionuclide distribution in incinerator ash(a)

Radionuclide	Distribution (percent)
Pu	77-82
Cs-137	77
Cs-134	8
Co-60	6
Ag-110m	3
Ru-106	2
Zn-65	1.5
Sb-125	0.8
Zr-95	0.3
Sr-85	86
Se-75	0.3
Sc-46 (microspheres)	79-98
I-125	< 1
H-3	< 1

(a) Extracted from IAEA Technical Report Series No. 302, Appendix A, 1989 (IAE89), HPS Vol. 44, No. 6 (LAN83), Waste Management-85 (WM85), and DOE/LLW-12T, Nov. 82 (EGG82).

There is a problem inherent in characterizing radionuclide distributions and concentrations in ashes. The presence of radionuclides in ash is highly dependent on the sequence of the burn and the material that is initially radioactive. The ash will settle according to physical properties (e.g., particle size and density) (EGG82, LAN83, WM85). Accordingly, the

radioactivity in the ash will also be layered during the combustion process until the ash is physically removed.

The ash removal system will disturb this distribution by stirring and mixing the ash, in effect diluting the radioactivity over a larger ash volume. Experience has shown that it is not uncommon to have discrepancies on the order of 20 to 50 percent when attempting to account for the distribution of radioactivity (EGG82, LAN83, WM85). As noted earlier, this aspect is further complicated by ash that settles or deposits in other parts of the system and by the smaller amount released through the exhaust stack.

Among the principal factors to be considered in evaluating the environmental impacts of radioactive ash disposal are worker radiation exposures and exposures to the public due to transportation to the disposal site. Additionally, the impact of disposal of the original feed material should be considered by comparison. In some instances, the presence of RCRA-regulated materials in the feed material would prohibit the land disposal of the waste material, resulting in possibly prolonged storage.

NRC regulations governing acceptable forms for land disposal of low-level waste are contained in 10 CFR 61. Solidification of the radioactive ash is required prior to shipment for disposal. Department of Transportation regulations which govern the packaging, preparation for shipment, and transportation of radioactive waste are contained in 49 CFR 173, Subpart I. Additional State regulations may apply, depending on the disposal site to be used.

Currently there are only three approved commercial disposal sites in the United States for low-level radioactive waste: Barnwell, South Carolina; Beatty, Nevada; and Richland, Washington. Others are expected to be opened in the early 1990s to meet the requirements of the Low-Level Waste Policy Act Amendments of 1985. Disposal of government waste may be permitted at selected federally owned sites.

1.3 INCINERATOR POPULATION

Although the historical operating experience base is still quite limited for radioactive and mixed waste incineration, the shrinking availability of publicly acceptable means of waste disposal and subsequent need to minimize waste quantities are generating increased efforts to use incineration to reduce the volume and hazardous chemical content of waste material. This section discusses some of the radioactive/mixed waste incinerators now in use or under consideration.

Operable incinerators are located at four U.S. Department of Energy (DOE) facilities. These are the controlled air incinerator at the Los Alamos National Laboratory (LANL), the Oak Ridge Toxic Substances Control Act (TSCA) incinerator, the Rocky Flats Plant (RFP) fluidized bed incinerator, and the Idaho National Engineering Laboratory (INEL) Waste Experimental Reduction Facility (WERF). Schematics of these incinerators are provided in Figures 1-1 through 1-4. Additionally, a new controlled air incinerator is planned for LANL, and a rotary kiln incinerator (the Consolidated Incineration Facility, or CIF) is planned for the Savannah River Site. The Savannah River Site Beta-Gamma incinerator, shown in Figure 1-5, was shutdown several years ago for equipment modifications. When the CIF was approved, modification of the Beta-Gamma incinerator was canceled, and there are no plans to restart this unit. DOE has discontinued work at the INEL Process Experimental Pilot Plant (PREPP) incinerator shown in Figure 1-6, while evaluating its future role in the DOE Waste Management Program.

A low-level radioactive waste incinerator owned and operated by the Scientific Ecology Group, Inc. (SEG) in Oak Ridge, Tennessee, began commercial operation in 1989. The SEG incinerator, shown in Figure 1-7, is an automatically controlled partial-pyrolysis unit, based on the Swedish Studsvik incinerator, which has been in service since 1976.

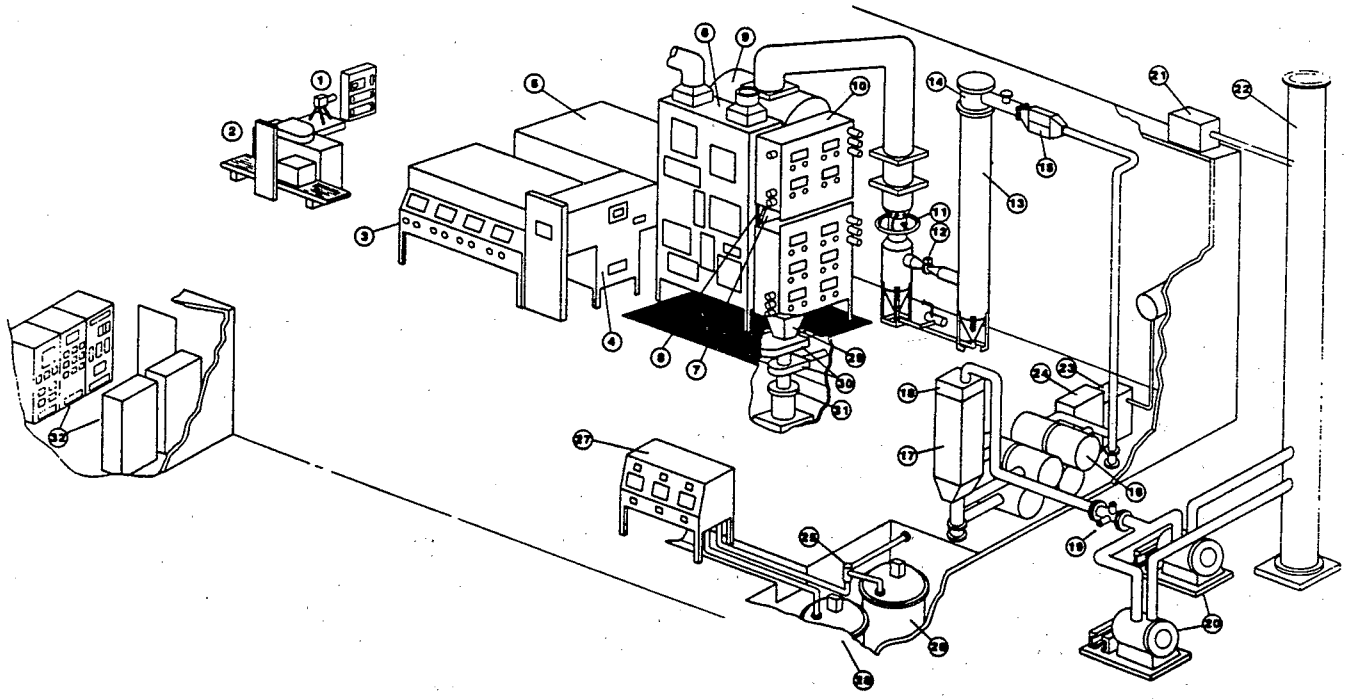

1. Multiple Energy Gamma Assay System (MEGAS)
2. Micro-dose x-ray waste package scanner
3. Waste receiving glovebox with air-lock entry
4. Side ram feeder
5. Main ram feeder
6. Combustion fuel/air supply glovebox
7. Incinerator ignition (primary) chamber
8. Inter chamber
9. Incinerator combustion (secondary) chamber
10. Incinerator chamber access gloveboxes
11. Quench column
12. High-energy venturi scrubber
13. Packed column scrubber
14. Off-gas demister
15. Off-gas superheater
16. HEPA filters (first and second stages)
17. Activated carbon adsorber
18. HEPA filter (third stage)
19. Off-gas monitoring (CO, CO_2, H_2O) station
20. Continuous stack sample system
21. Continuous stack sample system
22. Facility and process vent stack
23. Scrub-water primary coolant heat exchanger
24. Isolated secondary coolant loop heat exchanger
25. Scrub-water hydrocyclone particulate separator
26. Scrub-water recirculating sump tank
27. Scrub-water blowdown filters
28. Facility liquid sump tank and transfer system
29. Gravity ash-removal hopper
30. Ash-removal valves
31. Ash-removal drum system
32. Process instrumentation and control panels

Figure 1-1. The Los Alamos Controlled Air Incinerator

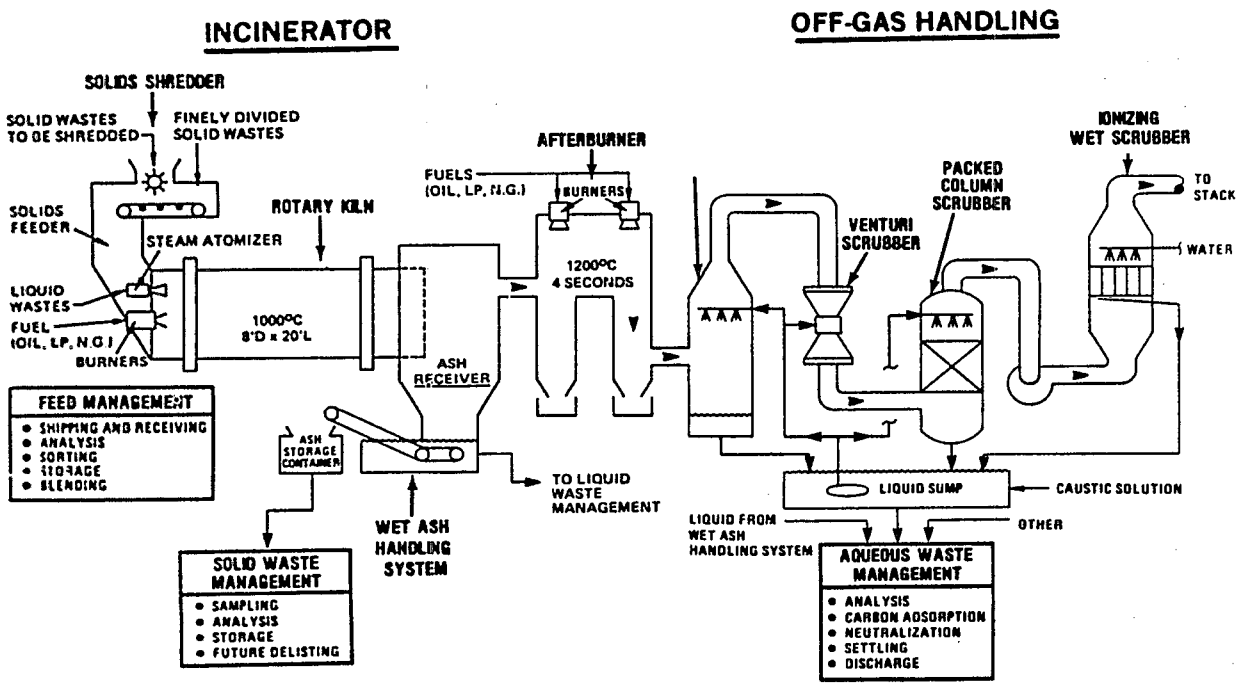

Figure 1-2. The Oak Ridge Toxic Substances Control Act (TSCA) Incinerator

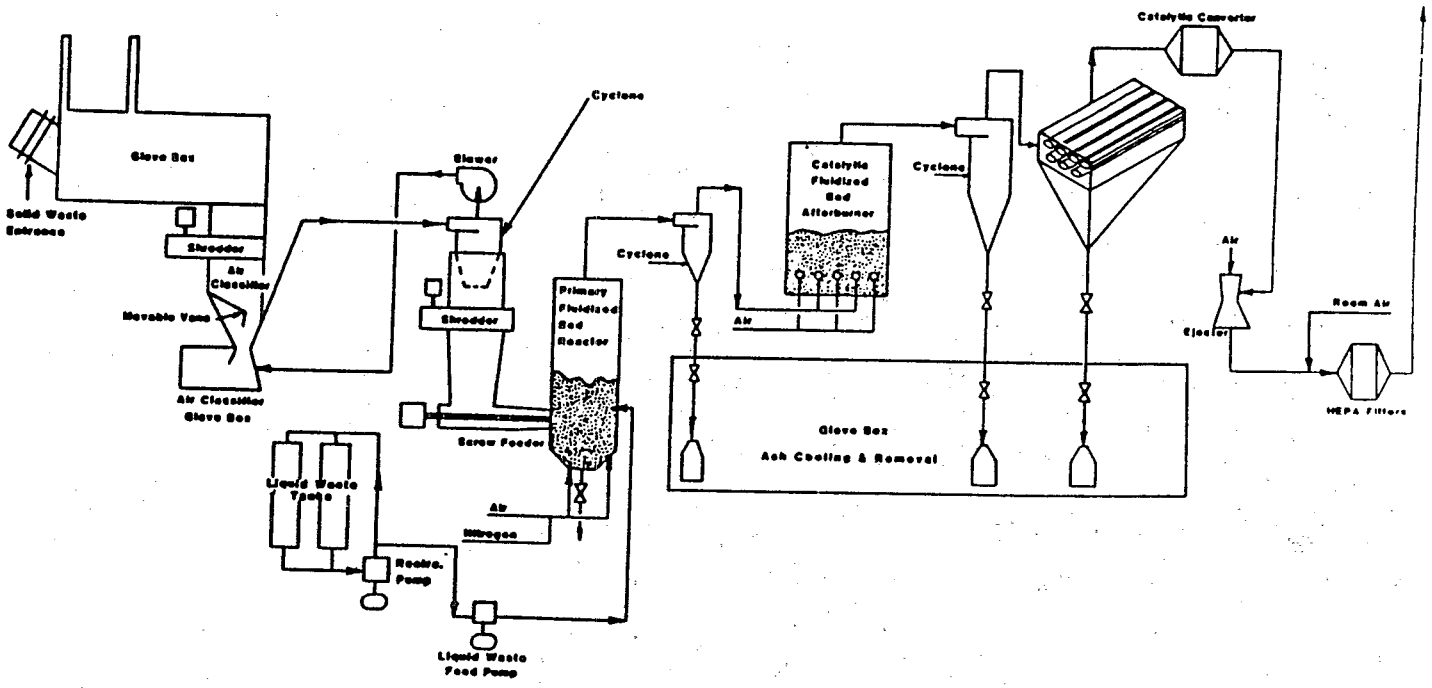

Figure 1-3. The Rocky Flats Fluidized Bed Incinerator

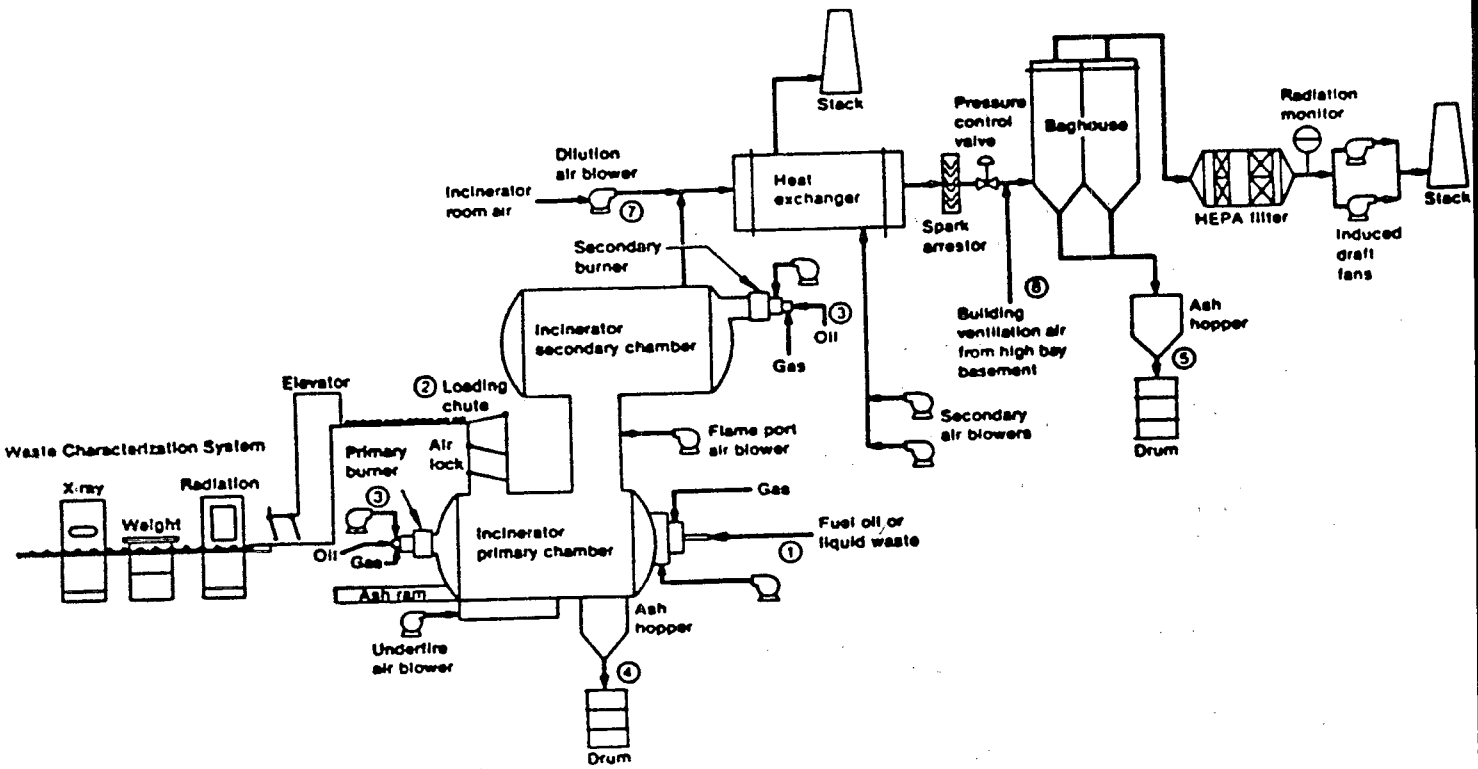

Figure 1-4. The INEL Waste Experimental Reduction Facility

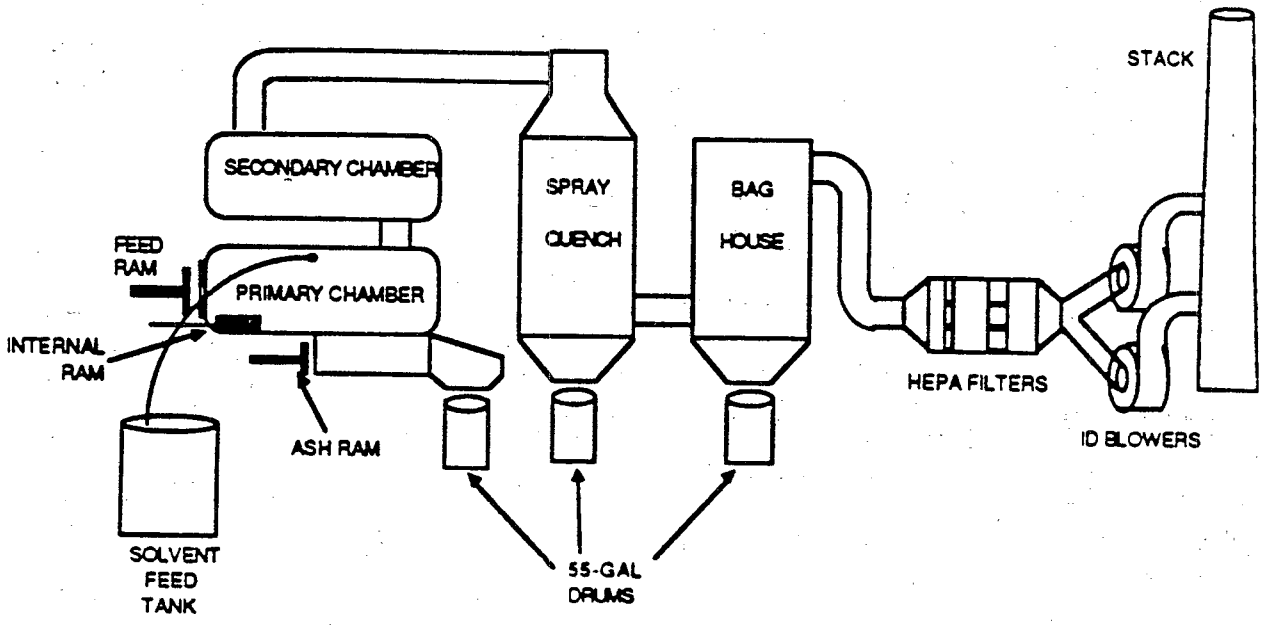

Figure 1-5. The Savannah River Site Beta-Gamma Incinerator

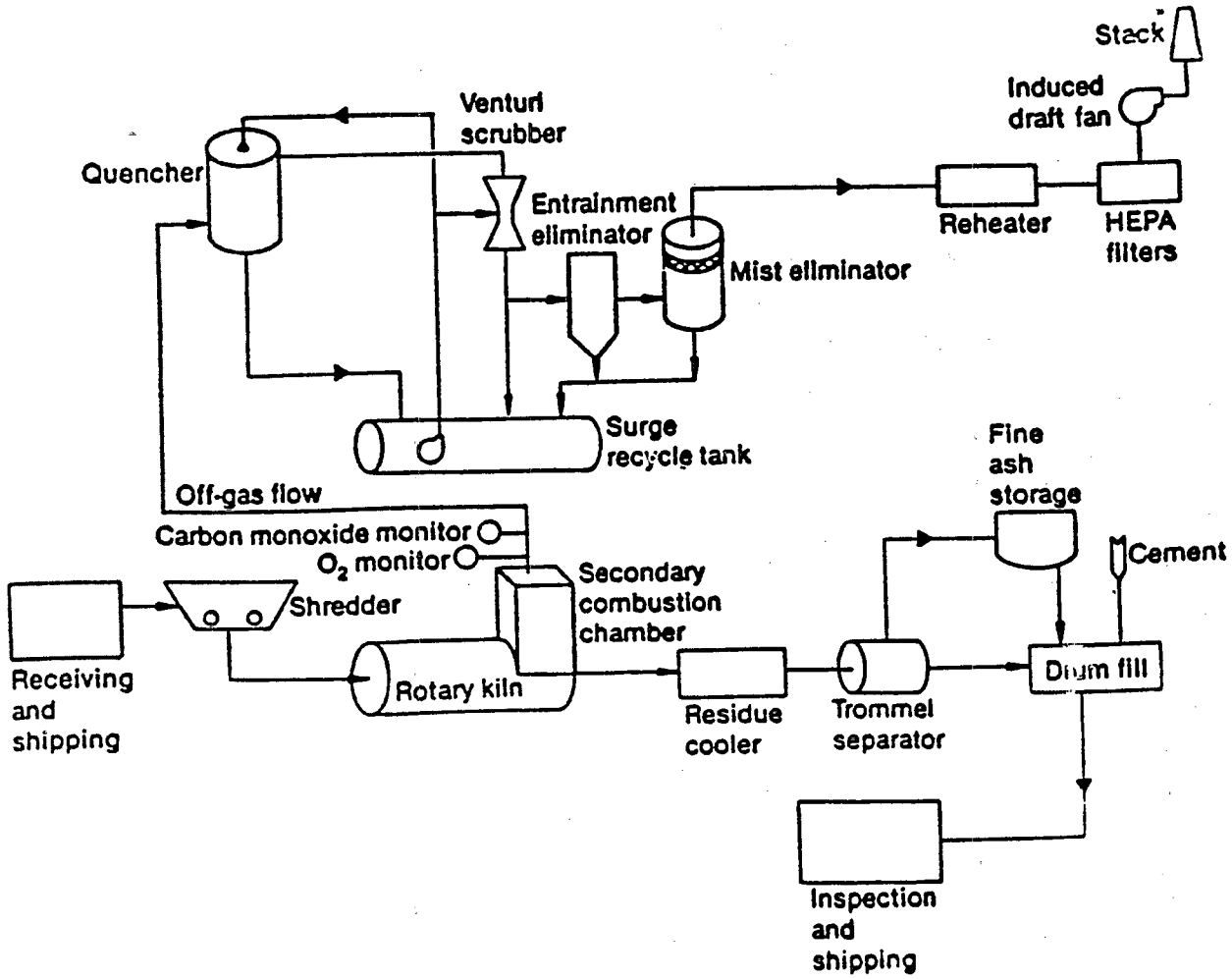

Figure 1-6. The INEL PREPP Incinerator

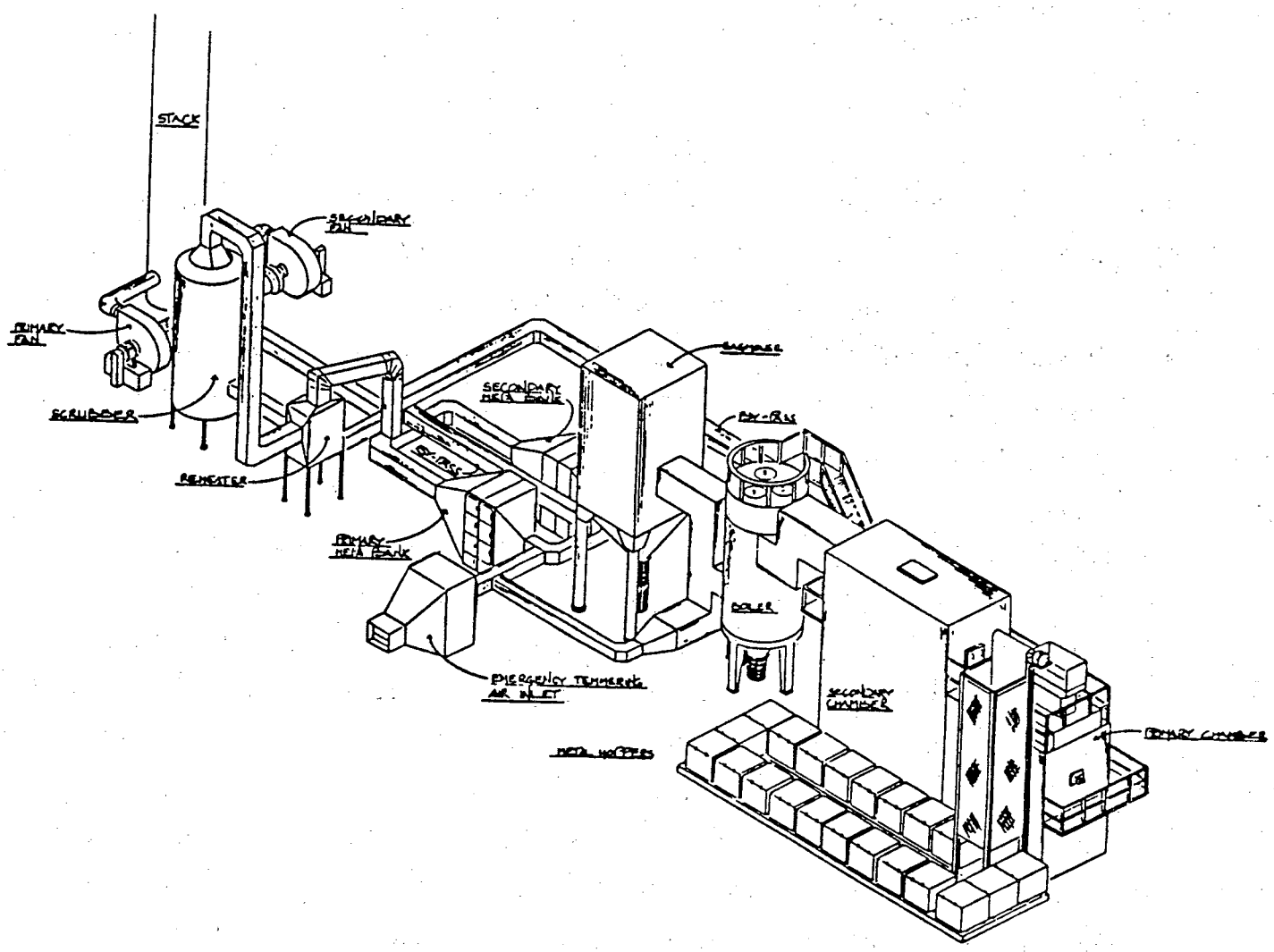

Figure 1-7. The Scientific Ecology Group (SEG) Incinerator

Advanced Nuclear Fuels, in Richland, Washington, operates a dual-chamber controlled-air incinerator for processing solid and liquid wastes contaminated with uranium. The incinerator has operated since October 1988. The wastes incinerated originate during the manufacture and recovery of nuclear fuel materials.

A commercial unit for thermal destruction of mixed waste was permitted in 1990, and is expected to begin operation in early 1991. This unit, owned and operated by Diversified Scientific Services, Inc. (DSSI), in Kingston, Tennessee, is designed to use mixed waste, in fluid form only, as beneficial fuels in a boiler system. DSSI notes that most of the waste will come from hospitals and universities where various short-lived radionuclides are used, and that most of the radioactivity will have decayed away before the waste is processed and received by DSSI. The boiler system is designed for complete thermal destruction of the fuels and recovery and reuse of the energy produced.

Two electric utility companies investigated incineration for volume reduction of waste produced at their nuclear generating stations. Duke Power Company installed a fluidized bed incinerator at its Oconee Nuclear Station in South Carolina. Changes in station operating procedures made subsequent to the installation of the incinerator changed the potential incinerator feed material from that originally contemplated. The consequent need for design modifications, and associated delays, resulted in a decision to defer final completion and operation of the incinerator for an undetermined period. The incinerator is being maintained in a layup condition pending a future decision to reactivate. Duke Power now uses the SEG incinerator described above for its incineration needs (DUK85, DUK90). Commonwealth Edison Company installed fluidized bed incinerators similar to the Duke Power unit at its Byron and Braidwood nuclear stations. These incinerators are also currently in layup.

Table 1-11 summarizes the location, type, status, and waste processed for each of the incinerators described above.

Table 1-11. Status of selected U. S. radioactive and mixed waste incinerators

Operator/ Location	Type of Incinerator	Status	Waste Stream	Design Capacity (kg/h)
DOE/ Rocky Flats	Fluidized Bed	Shutdown - to be upgraded for RCRA permitting	3,4,8 (no PCBs), 10	93
DOE/ SRS Beta-Gamma	Stationary Hearth	Shutdown - Restart not planned	1, 2	182
DOE/ SRS CIF	Rotary Kiln	RCRA Part B permit submitted 1988. Planned operation in 1993.	3, 4, 9	919
DOE/ LANL CAI	Controlled Air	RCRA, TSCA permitted, shutdown pending EIS. Planned restart in 1991.	1,2,3,4,5, 6,7,8,9,10 (liquids only)	57
DOE/ LANL LLW/MW	Controlled Air	Planned operation in 1997.	1, 2, 3, 4	181
DOE/ INEL WERF	Controlled Air	Operating under interim status. RCRA Part B permit submitted.	1, 2, 3, 4	181
DOE/ INEL PREPP	Rotary Kiln	Planned operation under evaluation	5, 6	
DOE/ TSCA Oak Ridge, TN	Rotary Kiln	Testing, tentative operation 1991	1, 2, 3, 4, 10	1043
BNL/HWMF Brookhaven, NY	Stationary Hearth	Operating. Not RCRA permitted	11	34
Commercial				
SEG/ Oak Ridge, TN	Controlled Air	Operating	1	727
DSSI/ Kingston, TN	Boiler	Planned operation 1991	3	2 gal/m
ANF/ Richland, WA	Controlled Air	Operating	12	
Utility				
Duke Power/ Oconee Nuclear Station	Fluidized Bed	Lay-up	1, 2	
Commonwealth Edison/ Byron and Braidwood Nuclear Stations	Fluidized Bed	Lay-up	1, 2	

Waste Stream Codes

TRU = Transuranic Waste
LLW = Low-Level Waste
MW = Mixed Waste

Code	Waste	Code	Waste
1	LLW Liquids	7	TRU/MW Liquids
2	LLW Solids	8	TRU/MW Solids
3	LLW/MW Liquids	9	Non-Radioactive Hazardous Wastes
4	LLW/MW Solids	10	Wastes can contain PCBs, except as noted
5	TRU Liquids	11	Very low-level radioactive nuclear medicine wastes and autoclaved medical wastes
6	TRU Solids	12	Liquid and solid wastes contaminated with U

A number of smaller scale incinerators are used by medical facilities and other institutions to process radioactive waste. Using data from the CRCPD survey and assumptions about nonrespondents, it is estimated that nearly 200 licensees incinerated about 300,000 cubic feet of low-level radioactive waste in 1984.

International incineration experience was briefly reviewed during this project. A detailed review of international experience is beyond the scope of this project. Table 1-12 lists location, type, design, capacity, and waste stream content for operational large scale foreign incinerators. A survey of the operating history of several European facilities indicates that releases and offsite exposures are well within established limits (IAE89). Typically, reported airborne releases range from nondetectable levels to nearly one percent of the imposed limits. Most of the problems associated with incinerator operations have, however, been experienced with operational reliability and maintenance (IAE89). Such problems typically include: frequent replacement of off-gas treatment system filters, corrosion of components, plugging of heat-exchangers, incomplete incineration, accumulation of residual ashes in systems and components not designed for ash removal, personnel exposure, contamination control, potential fires in filter systems, and humidity control and HEPA filter clogging. Such problems have also resulted in higher operating costs.

One incinerator research project, being conducted under the Superfund Innovative Technology Evaluation (SITE) Program, has potential application to radioactive and mixed waste treatment (ESC89). This project, the Plasma Centrifugal Reactor, utilizes high temperatures (exceeding 2800°F) generated by a 600-Kw plasma arc torch to volatilize organic components and encapsulate heavy metal components in a glassy slag. The volatile metals are captured within an offgas treatment system. Liquid and solid organic compounds can be treated by this technology, and it is most appropriate for soils and sludges contaminated with metals and difficult to destroy organic compounds.

Table 1-12. International operational large-scale incinerators

Country	Location	Type	Waste stream	Design Capacity (kg/h)
Austria	Research Centre (Seibersdorf)	Vertical shaft	Misc. solids, liquids	60
Belgium	Research Centre (Mol)	1) High temperature slagging chamber	Misc. actinide and Beta-Gamma contaminated solids	70
		2) Twin chamber	Misc. Beta-Gamma solids	230
Canada	Bruce	Batch pyrolysis (Trecan)	LLW	2270 kg/batch
	Chalk River	Batch pyrolysis (Trecan)	LLW	1135
France	Reprocessign plant (Marcoule)	Furnace with post combustion	Misc. solids	80
	Research Centres (Fontenay-aux-Roxes)	Furnace with post comustion	Animal carcasses	50
	(Pierelate)	Furnace with post combustion	Oil and solvents	70
	(Cardarache)	1) Horizontal Furnace	Spent solvents	30 1/h
		2) Controlled air Furnace		
Germany	Research Centres (Karlsruhe)	1) Vertical shaft controlled air	Misc. solids	30
		2) Vertical shaft controlled air	Liquids	50
	(Julich and Karlstein)	1) Two-stage, excess air	Misc. solids	100
		2) Controlled air	LLW	50
Germany	Nukem	Pyro-hydrolysis		25
	Weinheim	-	LLW	400
Japan	Tepco - Fukushimal	HTSI 'MOL' design	Beta-Gamma solids	70
	Tokai Mura	Vertical shaft (3 in operation)	-	50-100
Sweden	Research Centre (Studsvik)	Vertical shaft, afterburner	Misc. solids	200-400
UK	Power Stations (Hinkley Point and Wylfa)	Excess air, afterburner	Misc. solids Contaminated oil	75 20-30 1/h
	Harwell	Excess air	Solid LLW, biological materials	136
	Dounreay	Excess air	Solid LLW	300 m^3/y
Italy	Trine-Verallese	Excess air	LLW	15

Phase III testing, originally scheduled for late 1990, was designed to determine the applicability, operability, and reliability of the system when processing DOE waste. During the tests, waste materials were to simulate Idaho National Engineering Laboratory (INEL) radioactive and mixed wastes. These tests were, however, delayed because of inappropriate funding (RET90). In the interim, RETECH is planning a full scale demonstration at a chemical plant located in Switzerland. The demonstration tests will be followed by commercial operation at this Swiss company. The plasma centrifugal reactor will be designed to accommodate 55 gallon drums into the reactor chamber. Operational test results are expected to become available in early 1991 (RET90).

1.4 OPERATIONAL INCINERATOR EMISSIONS

1.4.1 DOE Incinerators

The following presents information characterizing radionuclide emissions for a few DOE and two commercial facility incinerators. For DOE incinerators, the information is based on DOE data prepared in response to NESHAPS reporting requirements under 40 CFR 61.94. The DOE compiles, on a yearly basis, such data in the Effluent Information System - EPA Release Point Analysis Report, a computerized database. For the commercial facilities, the information is extracted from technical correspondence.

The DOE reports provide aggregate data on airborne effluent releases by radionuclides and emission sources (e.g., buildings, areas, or stacks). In some instances, the release points include more than one emission source for a given stack or building. The DOE reports do not, however, present any information characterizing each incinerator emission source contributing to total releases. Furthermore, these reports do not typically provide any information describing the activities or waste streams which contribute to overall emissions. Any information characterizing waste forms and waste volumes was obtained, whenever available, separately from each DOE facility.

The tabulations which follow also provide estimates of yearly average airborne concentrations released from the point of discharge into the atmosphere, but not at offsite locations. Offsite concentrations vary depending upon atmospheric dispersion at specific downwind distances and receptor locations. Accordingly, offsite airborne concentrations would be still lower than those shown in the enclosed tables.

Finally, it should be recognized that the information presented below characterizes activities and emissions which may have since been discontinued or represents waste forms or streams which are no longer generated. Similarly, some incinerators may have since been modified and retrofitted with newer or better off-gas treatment technology, or totally taken out of service. Accordingly, the information which follows provides only a snap-shot characterization of past waste processing activities and associated airborne radionuclide emissions.

1.4.1.1 Rocky Flats Fluidized-Bed Incinerator. The DOE Rocky Flats facility operates a fluidized bed incinerator (FBI) designed to recover plutonium from bulk waste. The incinerator is located in Building 776 and its off-gas treatment exhaust is released into a common system, Building 776-202 plenum.

The off-gas treatment system is comprised of several components. These components include: a set of sintered metal filters; a process gas heatexchanger; and a four-stage HEPA filter. Exhaust emissions are monitored by pulling a continuous sample through a particulate filter and an air monitoring and sampling station.

The FBI has never been used in a continuous operating mode. It has only been used for intermittent tests conducted over a two-year period (LUK90). Three tests were performed to evaluate the FBI while using radioactive waste. Two tests were conducted in 1979 and another one was done in 1980. The data associated with these tests are very limited in details, other than indicating that Pu was the suspected radioactive contaminant in the waste. No specific radioisotopes were identified (e.g., as Pu-239, Pu-240, Pu-241, etc.). Radionuclide

concentrations were reported to be at very low concentrations, at less than 10 nCi/g. Some of the relevant parameters characterizing these runs are shown below:

Test Run No.	Ending Date	Waste Weight(lbs)	Waste Weight Reduction	Waste Volume Reduction
3	6/79	1,411	4.0:1	----
4	8/79	7,011	---	----
5	8/80	5,132	4.0:1	23:1

Extracted from DOE/RFP submittal dated 10/29/90 (LUK90)

Airborne radionuclide emissions for three years, 1986 to 1988, for all releases associated with the Bldg 776-202 plenum are listed in Table 1-13. The data, however, do not indicate how much of the radioactivity released is due to other building activities or processes. This is because the FBI exhaust is fed into a larger system which services Bldg 776. Emissions are sampled beyond the point of confluence of the two exhaust systems. This feature makes it difficult to resolve emissions originating only from the FBI.

A review of Table 1-13 indicates that five radionuclides comprise a major fraction (23 to 55 percent for any single year) of the reported emissions. These nuclides are Pu-239, Pu-240, U-233, U-234, and U-238. Table 1-14 presents yearly average stack concentrations based on the previously cited yearly releases and given total air volume discharges. The resulting emissions represent stack radionuclide concentrations and not offsite airborne radioactivity. Stack concentrations have decreased over the three reported years, except for Pu-239/Pu-240 and U-238 which have remained relatively stable.

Table 1-13. Rocky Flats fluidized-bed incinerator emissions[a]

Radionuclides	Yearly Releases - Ci/yr[b] 1986	1987	1988
Am-241	5.1E-09	5.7E-09	2.4E-09
Pu-238	1.2E-09	4.3E-1O	2.2E-1O
Pu-239	O.OE-OO	2.1E-08	O.OE-OO
Pu-239-240	1.9E-08	O.OE-OO	1.7E-08
U-233-234	2.7E-09	1.4E-08	5.5E-1O
U-238	1.5E-08	1.3E-08	1.1E-08

(a) Extracted from the U.S. Department of Energy, Effluent Information System - EPA Effluent Analysis Report For Calendar Years 1986 to 1988, run date 9/18/89.
(b) All values are rounded off and entered as exponential notation; i.e., 5.1E-09 means 5.1×10^{-9}.

Table 1-14. Rocky Flats fluidized-bed incinerator stack radionuclide concentrations[a]

Radionuclides	Average Yearly Concentrations - uCi/cc[b] 1986	1987	1988
Am-241	6.7E-17	6.4E-17	4.1E-17
Pu-238	1.6E-17	4.8E-18	3.7E-18
Pu-239	O.OE-OO	2.4E-16	O.OE-OO
Pu-239-240	2.5E-16	O.OE-OO	2.9E-16
U-233-234	3.6E-17	1.6E-16	9.4E-18
U-238	1.9E-16	1.4E-16	1.9E-16

(a) Derived from the U.S. Department of Energy, Effluent Information System - computer run AFGHE776008A, 8/9/90.
(b) Values shown represent stack concentrations and not offsite airborne activity. Total air volume discharged through stack is 7.6E+7, 8.9E+7, and 5.8E+7 m^3 for 1986, 1987, and 1988, respectively. All values are rounded off and entered as exponential notation; i.e., 6.7E-17 means 6.7×10^{-17}

1.4.1.2 Los Alamos Controlled Air Incinerator. The Los Alamos Controlled Air Incinerator (CAI) was designed and built to process waste containing transuranics and mixed-fission products. The incinerator is in Building 37, which is located in Technical Area 50.

Incinerator off-gases are exhausted in a common stack, which also services other areas of Building 37. This feature makes it difficult to resolve emissions originating only from the CAI. The CAI off-gas treatment system is comprised of several components. These components include: a water-spray quench column; a venturi scrubber; a packed column absorber; a superheater; a set of primary HEPA filters; an activated carbon-bed; and a final set of HEPA filters.

The stack monitoring system pulls samples near the stack's exit point. Air samples are continuously taken whether the CAI is operating or not. The samples are drawn, under pseudo-kinetic conditions (i.e., using a fixed rather than variable sampling flow rate), through a particulate filter. The filter is changed and analyzed weekly. Radiological analyses are performed using laboratory procedures. Los Alamos is currently considering the installation of an on-line alpha/beta monitoring system distributed by EG&G/Ortec. This monitoring system, of European design, can differentiate between naturally occurring radioactivity (i.e., radon and thoron decay products) and alpha emitters of interest (e.g., Pu-239, Am-241, etc.).

Four-year summaries of airborne emissions are shown in Tables 1-15 and 1-16. Table 1-15 presents stack release data for 1985 to 1988. Plutonium releases make up a small fraction (a few percent) of total releases. Mixed-fission products comprise about 98 percent of the total emissions being reported by the LANL. Yearly average stack concentrations, based on the previously cited yearly releases, are shown in Table 1-16. The resulting airborne concentrations represent only stack radionuclide emissions and not offsite airborne radioactivity. In general, mixed fission products and plutonium emissions have fluctuated about the limits of detection from year to year.

Table 1-15. LANL controlled air incinerator emissions[a]
(Four-Year Summary)

	Yearly Releases - Ci/yr[b]			
Radionuclides	1985	1986	1987	1988
Mixed-fission products	1.8E-07	1.9E-06	1.6E-06	7.6E-07
Pu-238-239	1.4E-07	1.7E-08	---(c)	2.3E-08

(a) Extracted from the U.S. Department of Energy, Effluent Information System - EPA Effluent Analysis Report For Calendar Years 1986 to 1988, run date 9/18/89 and paper titled: The Los Alamos Controlled Air Incinerator for Transuranic and Chemical Waste, Table titled - TA-50-37 Controlled Air Incinerator: Total Airborne Radioactive Emission History, not dated.
(b) All values are rounded off and entered as exponential notation; i.e., 1.8E-07 means 1.8×10^{-7}.
(c) Denotes results at or below the limits of detection.

Table 1-16. LANL controlled air incinerator stack radionuclide concentrations[a]
(Four-Year Summary)

	Average Yearly Concentrations - uCi/cc[b]			
Radionuclides	1985	1986	1987	1988
Mixed-fission products	---(c)	1.OE-14	7.4E-15	5.6E-15
Pu-238-239	3.7E-15	9.0E-17	---(c)	1.7E-16

a) Derived from the U.S. Department of Energy, Effluent Information System - computer run ALDET001006A, 8/9/90.
(b) Values shown represent stack concentrations and not offsite airborne activity. Total air volume discharged through stack is 1.9E+8, 2.1E+8, and 1.4E+8 m^3 for 1986, 1987, and 1988, respectively. All values are rounded off as exponential notation; i.e., 1.OE-14 means 1.0×10^{-14}.
(c) Denotes results at or below the limits of detection.

More detailed breakdowns of LANL radioactive emissions, stack concentrations, and waste volume throughputs are shown in Tables 1-17, 1-18, and 1-19, respectively. This information and data characterize waste incineration practices from 1979 to 1990. A review of this information indicates that operational practices, incineration schedules, radionuclide distributions, activity levels, and waste volumes vary significantly from year to year. Nevertheless, it can be noted that radionuclide emissions are relatively insensitive to waste characteristics in view of past incineration practices.

1.4.1.3 Oak Ridge TSCA Incinerator. The Oak Ridge TSCA incinerator was designed to process uranium contaminated and hazardous organic wastes in compliance with the Toxic Substance Control Act (TSCA). Other forms of more traditional waste, e.g., LLW, are also incinerated at this facility. The incinerator is located in a dedicated facility (K-1435), which is part of the Oak Ridge Gaseous Diffusion Plant, which is designated as K-25.

Off-gas emissions are treated before being released out of the stack. The three major components of the offgas treatment system are the venturi scrubber, packed-column scrubber, and a wet-scrubber (ionizing). Emissions are continually monitored by an isokinetic sampling system. The sampling train consists of a particulate filter and a series of impinger and drying tubes. The sample is conditioned in order to minimize sample losses. Samples are (c) collected on a weekly basis and the sampling probe, filter, impingers, and drying tubes are subjected to laboratory analyses for specific radionuclides of interest.

Pre-operational testing was conducted in August and September 1988. Routine operations were started later in the fall and were conducted intermittently to primarily test and evaluate equipment performance and operating conditions.

Airborne emissions for the TSCA incinerator are shown in Table 1-20. As can be seen, data are available only for 1988 and for radionuclides which were used to conduct the trial burns. Some waste was, however, incinerated following the completion of the trial tests. Radionuclides

Table 1-17. LANL Bldg-37 (including CAI) Pu-239 stack releases[a]

Releases[b] Year Ending/Period		Activity Released (Ci)	Stack[c] Concentrations (uCi/mL)
1980:	5/16-6/13	4.0E-09	6.1E-17
1981:	10/31-11/27	1.2E-07	7.3E-15
1982:	4/16-5/14	8.0E-09	5.0E-16
	8/6-9/3	1.3E-08	7.9E-16
	9/3-10/1	2.7E-08	1.6E-15
1983:	3/11-3/18	1.5E-08	3.7E-15
1985:	12/28-1/4	1.5E-08	3.7E-15
	1/25-2/1	2.3E-08	5.6E-15
	3/15-3/22	1.9E-08	4.7E-15
	3/22-3/29	1.2E-O8	2.9E-15
	6/21-6/28	1.5E-08	3.7E-15
	11/15-11/22	9.0E-09	2.1E-15
	11/27-12/6	1.5E-08	2.9E-15
	12/6-12/13	1.5E-08	3.7E-15
1986:	11/21-11/26	1.7E-08	5.7E-15
1989:	12/23-1/3	1.2E-08	2.9E-15
	3/24-3/31	1.4E-08	5.2E-15
	7/7-7/14	1.7E-08	6.5E-15
	12/15-12/22	4.0E-08	1.5E-14

(a) Extracted from U.S. Department of Energy/LANL submittal dated 11/9/90 (PUC90). All values are rounded off and entered as exponential notation; i.e., 4.0E-09 means 4.0×10^{-9}.

(b) For the years 1984, 1987, and 1988, all reported releases are at or below the limits of detection.

(c) Values shown represent stack concentrations and not offsite airborne radioactivity.

Table 1-18. LANL Bldg-37 (including CAI) mixed fission products (beta) stack releases[a]

Releases[b] Year Ending/Period		Activity Released (Ci)	Stack[c] Concentrations (uCi/mL)
1981:	7/10-8/7	3.1E-08	2.5E-15
	8/7-9/4	3.4E-08	2.1E-15
	10/2-10/30	5.8E-07	3.5E-14
	10/31-11/27	7.6E-08	4.6E-15
	11/27-12/25	8.3E-08	5.0E-15
1982:	12/31-1/8	1.OE-08	2.2E-15
	12/25-1/22	6.8E-08	3.9E-15
	1/22-2/19	8.3E-08	5.0E-15
	2/19-3/19	9.3E-08	5.6E-15
	3/19-4/16	9.1E-08	5.6E-15
	4/16-5/14	1.8E-06	1.1E-15
	4/2-4/9	1.9E-08	4.6E-15
	5/7-5/14	5.9E-08	1.4E-14
	5/14-6/11	1.5E-07	9.1E-15
	6/11-6/18	1.5E-08	3.8E-15
	8/13-8/16	1.1E-08	6.4E-15
	6/11-7/9	6.5E-08	4.0E-15
	7/9-8/6	1.4E-OB	8.5E-16
	8/6-9/3	7.6E-08	4.6E-15
	10/1-10/29	3.2E-08	1.9E-15
	10/29-11/26	2.7E-08	1.8E-15
	11/26-12/31	9.5E-08	4.5E-15
1983:	3/11-3/18	3.5E-08	8.5E-15
	6/24-7/1	2.7E-08	6.6E-15
1986:	4/25-5/30	2.1E-07	2.6E-14
	5/30-10/3	5.2E-OB	7.1E-16
	6/27-10/3	3.2E-08	5.6E-16
	10/10-11/7	1.OE-07	6.2E-15
	11/7-12/12	1.4E-07	6.7E-15
	12/12-1/23/87	1.2E-07	5.0E-15
1987:	1/23-2/27	1.3E-07	6.5E-15
	2/27-4/3	1.2E-07	5.9E-15
	3/20-3/27	2.1E-08	5.1E-15
	4/3-5/8	1.1E-07	5.5E-15
	5/8-5/29	6.3E-08	5.1E-15
	7/31-9/4	1.2E-07	6.0E-15

Table 1-18. LANL Bldg-37 (including CAI) mixed fission products (beta) stack releases[a] (continued)

Releases[b] Year Ending/Period		Activity Released (Ci)	Stack[c] Concentrations (uCi/mL)
1987:	9/4-10/4	2.2E-07	1.1E-14
	10/9-11/13	1.4E-07	9.4E-15
	11/13-12/18	2.2E-07	1.OE-14
	12/18-1/22/88	2.0E-07	1.1E-14
1988:	1/22-2/26	1.6E-07	1.2E-14
	2/26-4/1	5.9E-08	4.5E-15
	4/1-5/6	9.8E-08	7.4E-15
	5/6-6/10	1.7E-07	1.3E-14
	6/10-7/15	6.0E-08	4.6E-15
	7/15-8/19	9.2E-08	7.0E-15
	8/19-9/23	3.4E-08	2.6E-15
	10/28-12/2	2.5E-08	1.9E-15
	12/2-1/3/8	1.3E-08	1.OE-15
1989:	1/6-2/3	1.1E-07	9.6E-15
	2/3-3/10	3.3E-OB	2.5E-15
	3/10-4/14	1.4E-07	1.OE-14
	4/14-5/19	3.3E-08	2.5E-15
	6/23-7/28	7.0E-08	5.4E-15
	7/28-9/1	9.0E-09	8.3E-16
	9/1-10/6	1.1E-07	8.2E-15

(a) Extracted from U.S. Department of Energy/LANL submittal dated 11/9/90 (PUC90). All values are rounded off and entered as exponential notation; i.e., 3.1E-08 means 3.1×10^{-8}.
(b) For the years 1984 and 1985, all reported releases are at or below the limits of detection.
(c) Values shown represent stack concentrations and not offsite airborne radioactivity.

Table 1-19. LANL controlled air incinerator radioactive throughputs[a]

Date[b] Processed	Nuclides	Activity (Ci)	Total Waste[c] Quantity (kg)
12/7/79	Pu-239,Am-241	<2.3E-04	229
4/7/80	Pu-239,Am-241	8.0E-05	5
4/28/80	Pu-239,Am-241	4.5E-03	277
7/6/81	I-131	1.6E-02	290
	Cs-137,Ru-103, Fe-59,Co-60	4.0E-03	145
8/15/82	I-131	1.6E-02	145
	Cs-137,Ru-103, Fe-59,Co-60	4.0E-03	145
9/6/84	Pu-239,Am-241	7.1E-02	100
9/23/86	Pu-239,Am-241	1.4E-O1	448
3/24/87	Beta emitters	6.2E-02	989

(a) Extracted from U.S. Department of Energy/LANL submittal dated 11/9/90 (PUC90). All values are rounded off and entered as exponential notation; i.e., 2.3E-04 means 2.3×10^{-4}.
(b) No data available for the years 1983, 1985, and 1988.
(c) Values represent total waste quantities incinerated for the given dates. Radioactivity may in fact be contained in smaller waste volumes, typically less than 1 percent.

Table 1-20. Oak Ridge TSCA incinerator emissions and waste feed radioactivity for 1988[a]

Radionuclides	Emissions - Ci/yr[b]	Waste Feed - Ci[c]
Tc-99	1.6E-03	9.5E-05
U-234	4.9E-04	ND(d)
U-235	2.5E-05	ND
U-238	5.7E-04	ND
Total-U	ND	4.0E-02
Th-228	ND	1.OE-06
Th-230	ND	8.8E-07
Np-237	ND	1.4E-07
Pu-238	ND	4.8E-07
Pu-239	ND	4.8E-07

(a) Extracted from the U.S. Department of Energy, Effluent Information System - EPA Effluent Analysis Report For Calendar Years 1986 to 1988, run date of 9/18/89.
(b) All values are rounded off and entered as exponential notation; i.e., 1.6E-03 means $1.6x10^3$.
(c) Associated waste volume: solid waste, 160 cubic feet; liquid waste, 20,490 gallons. Extracted from DOE 10/5/90 submittal.
(d) ND means no data.

percent for each of the remaining two uranium isotopes. These reported radionuclide emissions are associated with the processing of 160 cubic feet of solid waste and 20,490 gallons of liquid waste.

Stack radionuclide concentrations, based on the previously cited yearly releases, are shown in Table 1-21 for 1988 only. The incinerator was not operating in the previous years. The resulting airborne concentrations reflect primarily test burn trials and do not represent stack offsite airborne radioactivity.

1.4.1.4 Brookhaven National Laboratory LLW Incinerator. The Brookhaven National Laboratory (BNL) incinerator is located in the Hazardous Waste Management Facility (Bldg

Table 1-21. Oak Ridge TSCA incinerator stack radionuclide concentrations - 1988[a]

Radionuclides	Average Yearly Concentrations - uCi/cc[b]
Tc-99	8.6E-11
U-234	2.6E-11
U-235	1.3E-12
U-238	3.0E-11
Alpha activity	2.6E-12
Beta activity	1.2E-12
Gamma activity	2.2E-15

(a) Derived from the U.S. Department of Energy, Effluent Information System - computer run OUKK001050A of 8/9/90 and extracted from DOE/BNL 10/5/90 submittal. All values are rounded off and entered as exponential notation; i.e., 8.6E-11 means 8.6×10^{-11}

(b) Values shown represent stack concentrations and not offsite airborne activity. Total air volume discharged through stack is 1.9E+7 m^3 for 1988. Associated waste volume: solid waste, 160 cubic feet; liquid waste, 20,490 gallons.

No. 444). This incinerator is used to process low-level radioactive waste generated by various facility operations and research activities.

The incinerator is not equipped with off-gas treatment or air monitoring systems. Radionuclide emissions are based on the radionuclide distributions and inventories characterizing the waste. Daily and weekly airborne monitoring is performed at two sampling locations situated near the facility's site boundary.

Airborne effluent releases for the years 1986 to 1988 are shown in Table 1-22. Seventeen radionuclides were reported released between 1986 and 1988. In 1988, only H-3, C-14, Cr-51, Tc-99, Sn-113, I-125, and I-131 were reported by BNL. In general, H-3 (about 95 percent) and Sn-113 (nearly 72 percent) are the most predominant radionuclides reported over the 3-year span.

Table 1-22. Brookhaven National Laboratory low-level radioactive waste emissions[a]

Radionuclides	Yearly Releases - Ci/y[b] 1986	1987	1988
H-3	9.4E-02	1.6E-O1	5.6E-05
C-14	7.7E-04	2.2E-04	3.0E-06
P-32	2.5E-04	9.0E-07	O.OE-OO
S-35	5.7E-04	2.5E-03	O.OE-OO
Cr-51	1.1E-04	1.5E-03	5.0E-07
Mn-54	1.OE-05	O.OE-OO	O.OE-OO
Fe-55	5.1E-03	O.OE-OO	O.OE-OO
Co-57	2.1E-05	O.OE-OO	O.OE-OO
Fe-59	O.OE-OO	1.OE-06	O.OE-OO
Tc-99	1.OE-04	4.2E-05	5.0E-09
Tc-99m	2.0E-04	1.OE-05	O.OE-OO
Ru-103	1.2E-05	O.OE-OO	O.OE-OO
Sn-113	2.0E-04	2.8E-03	2.3E-04
Sn-117m	4.2E-05	O.OE-OO	O.OE-OO
I-125	5.2E-04	8.9E-05	2.0E-05
I-131	2.1E-05	1.7E-04	1.OE-05
Tl-201	2.1E-05	O.OE-OO	O.OE-OO

(a) Extracted from the U.S. Department of Energy, Effluent Information System - EPA Effluent Analysis Report For Calendar Years 1986 to 1988, run date of 9/18/89.
(b) All values are rounded off and entered as exponential notation; i.e., 7.7E-04 means 7.7×10^{-4}.

Data characterizing monthly radionuclide emissions are shown in Table 1-23. Radionuclides and radioactivity releases are given for the years 1987, 1988, and 1989. This information reveals that waste was incinerated during only a few months each year, i.e., 5 months in 1987, and 3 months in 1988 and 1989. Some radionuclides are present in each burn while others are not. For example, H-3, C-14, C-51, Sn-113, and radio-iodines are the most often cited nuclides. In terms of radioactivity released on a monthly basis, H-3, P-32, S-35, Cr-51, Sn-113, and I-125 are by far the most predominant.

Table 1-23. Brookhaven National Laboratory low-level radioactive waste monthly incinerator emissions for 1987-1989[a]

Part I: 1987 Monthly Burns and Releases - mCi[b]

Radionuclides	May	June	July	August	December
H-3	1.6E+O1	--(c)	--	1.5E+O1	1.3E+02
C-14	1.5E-O1	7.0E-02	--	--	--
P-32	--	--	--	--	9.0E-04
S-35	5.0E-03	--	--	--	2.5E+OO
Cr-51	6.2E-02	5.0E-03	5.0E-03	1.4E+OO	5.3E-02
Fe-59	--	1.OE-03	--	--	--
Tc-99	1.2E-02	2.0E-02	--	1.OE-02	--
Tc-99m		1.OE-02	--	--	--
Sn-113	1.OE-02	--	--	--	2.8E-OO
I-125	4.6E-02	3.0E-03	6.0E-03	1.2E-02	2.2E-02
I-131	--	1.6E-02	1.OE-05	5.0E-03	1.5E-O1

Part II: 1988 Monthly Burns and Releases - mCi[b]

Radionuclides	February	September	November
H-3	--(c)	1.OE-03	5.5E+02
C-14	3.0E-03	--	--
Cr-51	--	--	5.0E-04
Sn-113	2.3E-O1	--	--
I-125	--	1.1E-02	8.0E-03
I-131	1.OE-02	--	--

(a) Extracted from the U.S. Department of Energy, Effluent Information System - EPA Effluent Analysis Report For Calendar Years 1986 to 1988, run date 9/18/89 and 10/4/90 DOE/BNL Submittal.

(b) All values are rounded off and entered as exponential notation; i.e., 7.7E-04 means 7.7×10^{-4}.

(c) Signifies that no data were reported for that month.

Table 1-23. Brookhaven National Laboratory low-level radioactive waste monthly incinerator emissions for 1987-1989[a] (Continued)

Part II: 1989 Monthly Burns and Releases - mCi[b]

Radionuclides	January	June	November
H-3	1.6E+01	9.1E-02	2.1E+01
C-14	4.0E-02	--(c)	3.0E-03
P-32	--	4.3E-02	1.0E-03
S-35	--	1.4E-02	1.0E-03
Cr-51	4.0E-01	--	4.2E-02
Co-57	--	4.8E-03	4.5-05
Ru-103	--	--	2.3E-05
I-125	1.8E-01	2.2E-02	8.0E-03
T1-204			1.0E-03

(a) Extracted from the U.S. Department of Energy, Effluent Information System - EPA Effluent Analysis Report For Calendar Years 1986 to 1988, run date 9/18/89 and 10/4/90 DOE/BNL Submittal.

(b) All values are rounded off and entered as exponential notation; i.e., 7.7E-04 means 7.7×10^{-4}.

(c) Signifies that no data were reported for that month.

Yearly average stack concentrations based on previously cited yearly releases are shown in Table 1-24. The resulting airborne concentrations reflect total air volume discharges and represent only stack radionuclide concentrations and not offsite airborne activity. In general, radionuclide concentrations have decreased over the three reported years. Some radionuclide emissions have, however, been reduced by several orders of magnitude; e.g., H-3, Cr-51, and Tc-99. For the remaining radionuclides, stack releases have decreased only slightly or have remained relatively stable.

1.4.1.5 Idaho National Engineering Laboratory WERF and PREPP Incinerators. The WERF is situated in Building 609, which is located in INEL's PBF/SPERT-III area. Two exhaust stacks service the incinerator, one for the heat-exchanger and one for the off-gas

Table 1-24. Brookhaven National Laboratory low-level radioactive waste incinerator stack concentrations[a]

Radionuclides	Average Yearly Concentrations - uCi/cc[b] 1986	1987	1988
H-3	1.0E-08	1.8E-08	6.2E-12
C-14	8.6E-11	2.4E-11	3.3E-13
P-32	2.8E-11	1.0E-13	0.0E-00
S-35	6.3E-11	2.8E-10	0.0E-00
Cr-51	1.2E-11	1.7E-10	5.6E-14
Mn-54	1.1E-12	0.0E-00	0.0E-00
Fe-55	5.7E-10	0.0E-00	0.0E-00
Co-57	2.3E-12	0.0E-00	0.0E-00
Fe-59	0.0E-00	1.1E-13	0.OE-00
Tc-99	1.1E-11	4.7E-12	5.6E-16
Tc-99m	2.2E-11	1.1E-12	0.0E-0O
Ru-103	1.3E-12	0.0E-00	0.0E-00
Sn-113	2.2E-11	3.1E-10	2.6E-11
Sn-117m	4.7E-12	0.0E-00	0.0E.00
I-125	5.8E-11	9.9E-12	2.2E-12
I-131	2.3E-12	1.9E-11	1.1E-12
Tl-201	2.3E-12	0.0E-00	0.0E-00

(a) Derived from the U.S. Department of Energy, Effluent Information System - computer run CBLIR72445A, 8/9/90.

(b) Values shown represent stack concentrations and not offsite airborne activity. Total air volume discharged through stack is 9.0E+6 m^3 for each reported year. All values are rounded off and entered as exponential notation; i.e., 1.OE-08 means 1.0×10^{-8}.

treatment system. The off-gas treatment system consists of a baghouse, pre-filter, and single bank of HEPA filters. The stack servicing the heat-exchanger is not equipped with an off-gas treatment system since this exhaust stream does not mix with combustion gases.

Stack releases are continuously monitored by an airborne radiation monitoring system. The sample is pulled through a particulate filter. Each filter is changed weekly and is analyzed monthly, as a composite sample. Analytical procedures include the determination of gross alpha and gross beta

include primarily Tc-99, U234, U-235, and U-238. Tc-99 makes up about 60 percent of the total radioactivity released, and uranium, except for U-235, makes up 20 activity and the identification of specific radionuclides. The results of these analyses are reported and compiled monthly and yearly by INEL.

Incinerator emissions are shown in Table 1-25. Airborne emissions typically include Co-60, Cs-137, Sr-90, Mo-99, and Mn-54. Cesium and strontium are the major radionuclides routinely released; they comprise about 70 percent of the total radioactivity. A review of the data indicates that mixed fission products (gross beta) and mixed alpha products (gross alpha) are the most predominant sources of radioactivity. On average, the WERF incinerator releases about 1,400 uCi of total radioactivity per year, based on 1987 INEL data (INEL88a,b). Total activity, shown as gross alpha and gross beta, and Sr-90 have been given for each of the four reported years. All other nuclides are present at much lower concentrations. It can be noted that emissions have fluctuated over the four reported years. These concentrations represent airborne radioactivity at the point of release and not at distant downwind locations.

Table 1-25. Idaho Engineering Laboratory WERF incinerator emissions[a]

	Yearly Stack Releases - Ci/yr[b]			
Radionuclides	1986	1987	1988	1989
Gross alpha	6.9E-09	3.3E-09	7.9E-08	5.7E-08
Gross beta	1.3E-07	3.2E-08	1.1E-06	1.1E-06
Sr-90	1.3E-07	7.9E-07	1.4E-06	9.4E-08
Cs-137	---(c)	2.0E-07	---	---

(a) Obtained by Telecon, INEL-Radioactive Waste Management Information System, 1988 data of July 18, 1990, and DOE/INEL submittal dated 10/5/90.
(b) All values are rounded off and entered as exponential notation; i.e., 6.9E-09 means 6.9×10^{-9}.
(c) Signifies that no data were reported.

Waste volumes and radionuclide concentrations are shown in Tables 1-26 and 1-27. Although several radionuclides are listed, waste activity is dominated by unidentified alpha emitters and mixed fission products. The waste volume processed yearly varied over a narrow range of

Table 1-26. Idaho Engineering Laboratory WERF incinerator monthly emissions and processed waste volumes[a]

Part I: 1987 Waste Volume and Activity Releases

Month	Volume (Cu.meters)	Activity Released - Ci[b] Cs-137	Sr-90	Gross Alpha	Gross Beta
Jan.	--[c]	--	5.6E-08	3.2E-09	4.0E-08
Feb.	279	--	1.6E-08	6.1E-09	3.4E-08
Mar.	--	--	1.1E-09	4.2E-09	2.3E-08
Apr.	210	--	1.6E-07	5.6E-09	3.5E-08
May	304	--	8.9E-08	2.9E-09	4.0E-08
Jun.	118	5.0E-08	1.6E-07	7.9E-09	9.8E-08
Jul.	122	1.OE-07	6.4E-08	6.6E-09	7.9E-08
Aug.	218	--	2.4E-08	4.2E-09	5.6E-08
Sept.	--	5.0E-08	1.OE-07	5.9E-09	1.2E-07
Oct.	127	--	2.9E-08	7.2E-09	7.8E-08
Nov.	100	--	8.8E-08	3.9E-09	4.5E-08
Dec.	--	--	--	7.8E-09	4.8E-08

Part II: 1988 Waste Volume and Activity Releases

Month	Volume (Cu.meters)	Activity Released - Ci Sr-90	Gross Alpha	Gross Beta
Jan.	241	1.6E-07	1.OE-08	9.9E-08
Feb.	249	1.2E-07	1.9E-OB	2.0E-07
Mar.	116	2.9E-08	5.9E-1O	8.6E-09
Apr.	127	2.9E-08	1.3E-09	1.6E-08
May	240	2.4E-08	5.5E-09	6.8E-08
Jun.	137	--	2.6E-12	5.4E-08
Jul.	118	6.7E-08	7.9E-09	1.OE-07
Aug.	99	9.9E-07	5.8E-09	6.0E-08
Sept.	247	3.8E-09	5.5E-09	9.0E-08
Oct.	118	1.3E-08	9.3E-09	1.3E-07
Nov.	133	1.4E-08	5.8E-09	6.8E-08
Dec.	172	--	7.3E-09	1.8E-07

Table 1-26. Idaho Engineering Laboratory WERF incinerator monthly emissions and processed waste volumes[a], (Continued)

Part III: 1989 Waste Volume and Activity Releases

Month	Volume (Cu.meters)	Sr-90	Activity Released - Ci Gross Alpha	Gross Beta
Jan.	--	1.9E-08	2.7E-09	5.7E-08
Feb.	5	3.8E-08	1.4E-08	2.3E-07
Mar.	--	3.3E-09	6.1E-09	4.3E-08
Apr.	251	--	--	6.0E-08
May	244	3.9E-1O	3.5E-09	6.7E-08
Jun.	119	1.8E-1O	1.8E-09	2.4E-08
Jul.	110	--	3.6E-09	1.5E-07
Aug.	230	--	5.0E-09	9.3E-08
Sept.	239	1.4E-08	4.3E-09	5.9E-08
Oct.	--	--	8.5E-09	6.2E-08
Nov.	209	2.0E-08	--	1.8E-07
Dec.	217	--	7.2E-09	1.1E-07

(a) Obtained from DOE/INEL, submittal dated 10/5/90.
(b) All values are rounded off and entered as exponential notation; i.e., 5.6E-08 means 5.6×10^{-8}.
(c) Signifies that no data were reported.

Table 1-27. Idaho Engineering Laboratory WERF incinerator low-level radioactive waste radionuclide concentrations[a]

Radionuclides	Average Waste Concentrations - uCi/cc[b] 1986	1987	1988
Co-60	3.3E-07	1.3E-04	3.9E-06
Nb-95	2.7E-07	O.OE-OO	O.OE-OO
Zr-95	1.4E-07	O.OE-OO	1.5E-07
Cs-134	2.9E-07	O.OE-OO	2.5E-08
Cs-137	1.2E-06	O.OE-OO	1.8E-07
Ce-144	1.9E-07	O.OE-OO	8.2E-09
Beta/Gamma	1.2E-07	O.OE-OO	O.OE-OO
Mixed Fission Products	1.1E-03	1.OE-03	7.7E-04
Mixed Alpha Emitters	2.9E-04	2.3E-05	2.9E-05

(a) Derived from the U.S. Department of Energy, Effluent Information System - computer run IIAWR76055A, 8/9/90.
(b) Total waste volume processed in each year is 1,611, 1,564, and 1,465 m^3 for 1986, 1987, and 1988, respectively. All values are rounded off and entered as exponential notation; i.e., 3.3E-07 means 3.3×10^{-7}.

1,465 to 1,624 entered as exponential notation; i.e., 3.3E-07 means $3.3x10^{-7}$. cubic meters, and averaged about 1,570 m^3. On a monthly basis, the processed waste volumes vary from about 5 to 250 cubic meters, averaging about 130 cubic meters per month over the four reported years. Using the information given in Tables 1-27 and 1-28, the overall incinerator decontamination factor (DF) has been estimated for mixed fission and alpha products, see Table 1-29. The DF is expressed as the ratio of the amount of radioactivity introduced into the incinerator to the amount that is observed on the discharge side of the offgas treatment system. The DF represents the overall effectiveness of the incinerator in retaining radioactivity in ashes and within off-gas treatment systems. A review of Table 1-29 indicates that DFs on the order of $1O^{+10}$ to 10^{+11} are routinely attainable. These results are generally better than those experienced at other facilities. A survey conducted by the IAEA reported DFs ranging from as low as 10 to as high as 10^{+7} see subsection 1.3.1 for details (IAEA89).

INEL is in the process of finalizing the installation of a new incinerator facility, known as the PREPP. The incinerator is located within INEL's TAN/TSF area. The PREPP incinerator is currently not processing any radioactive waste. Accordingly, there are no reported releases for this facility.

The PREPP incinerator may eventually process transuranic waste, primarily including Pu-239, Pu-240, Pu-241, and Pu-242, Am-241, Cm-241, and U-233. The process is designed to convert TRU and hazardous waste in a form compatible for eventual disposal at the WIPP facility, located in Carlsbad, New Mexico.

1.4.1.6 Savannah River Site Beta-Gamma Incinerator. The Savannah River Site Beta-Gamma Incinerator (BGI) has been used to process solid low-level radioactive waste generated by various plant operations and to treat liquid waste, such as spent Purex solvents. The incinerator, located in Building 230H, has been intermittently operated over the past few years and has not been running since 1989. The BGI will be replaced by the Consolidated Incineration Facility, which is scheduled to become operational in 1993. This facility will process hazardous and mixed waste in addition to low-level radioactive waste.

Table 1-28. Idaho Engineering Laboratory WERF incinerator stack concentrations[a]

Radionuclides	Average Yearly Concentrations - uCi/cc[b] 1986	1987	1988	1989
Gross alpha	4.2E-16	5.5E-16	8.8E-16	3.7E-16
Gross beta	8.1E-15	5.4E-15	1.2E-14	7.3E-15
Sr-90	7.7E-15	1.1E-14	1.6E-14	6.0E-16
Cs-137	---(c)	2.8E-15	---	---

(a) Derived from the U.S. Department of Energy, Effluent Information System - computer run IIAWR76055A of 8/9/90, and DOE/INEL submittal dated 10/5/90.

(b) Values shown represent stack concentrations and not offsite airborne activity. Total air volume discharged through stack is 1.7E+7, 6.0E+6, 8.9E+7, and 1.6E+8 m^3 for 1986, 1987, 1988, and 1989, respectively. All values are rounded off; entered as exponential notation; i.e., 4.2E-16 means $4.2x10^{-16}$.

(c) Signifies that no data were reported.

Table 1-29. Idaho Engineering Laboratory WERF incinerator overall decontamination factor[a]

Nuclides	Ratio of Waste to Stack Concentrations[b] Waste/Air Ratio 1986	Waste/Air Ratio 1987	Waste/Air Ratio 1988
Gross alpha:	10^{+11}	10^{+10}	10^{+10}
Gross beta & MFP:	10^{+10}	10^{+11}	10^{+10}

(a) Derived from the previous two tables, see text for details.

(b) Values shown represent the ratio of waste activity to its corresponding stack concentration. All values are rounded off and entered as exponential notation; i.e., 10^{+11} means about $1.0x10^{+11}$.

Airborne effluents from the BGI were treated by an off-gas system before being released. The treatment system was equipped with a dry quencher (air-atomized) to cool combustion gases, a baghouse, and a set of HEPA filters. Off-gases were released via a 60-foot stack with an exhaust flow rate of 10,000 cubic feet per minute.

The stack effluent radiological monitoring system was comprised of a continuous sampling pump and particulate filter system. Particulate filters were periodically removed and analyzed for gross beta and gamma activity. Such filters were also subjected to gamma spectroscopy analyses to identify specific nuclides.

Table 1-30 presents a summary of gaseous effluent releases for 1986, 1987, and 1988. Tritium is reported as the primary radionuclide for the three given years. Other radionuclides have also been reported, but at much lower activity levels. Such radionuclides include: Ru-106, I-131, Cs-134, Cs-137, Ce-144, Am-241, Am-243, Cm-242, Cm-244, and unidentified beta/gamma emitters. Together these radionuclides comprise about 1.OE-5 Curies in 1986, <4.0E-5 Curies in 1987, and <1.OE-6 Curies in 1988.

Table 1-30. Savannah River Site beta-gamma incinerator emissions[a]

	Yearly Releases - Ci/yr[b]		
Radionuclides	1986	1987	1988
H-3	4.6E+02	2.5E+03	1.5E+02

(a) Data obtained by telecon with SRS staff, July 20, 1990 and DOE/SRS submittal dated 9/28/90. 1988 data is for the month of January only. The BGI incinerator has since been shutdown.

(b) All values are rounded off and entered as exponential notation, i.e., 4.6E-02 means 4.6×10^{-2}.

The corresponding incinerated waste volumes are shown in Table 1-31. In all cases, the incinerator was operated only a few months each year; 6 months in 1986; 7 months in 1987, and 1 month in 1988. Solid wastes were incinerated in 1986, while H-3 contaminated oil was incinerated during each of the three reported years. The largest volume of oil and the highest H-3 radioactivity levels were incinerated in 1987.

1.4.2 Commercial Incinerators

1.4.2.1 Scientific Ecology Group Incinerator. The Scientific Ecology Group (SEG) incinerator, located in Oak Ridge, is designed to process low-level radioactive waste on a commercial basis. The SEG incinerator is based on a modified European design. The incinerator is used as part of a larger waste management program which includes waste processing, sorting, compaction, etc.

Airborne effluent releases and radionuclide distributions in waste and incinerator ashes are given, see Table 1-32, for the last 3 months of 1989. As can be noted, data parameters are incomplete for many of the listed radionuclides. In terms of airborne emissions, H-3 and C-14 are by far the most predominant. Radionuclide emissions for a 3-month period are shown in Table 1-33. The emissions are associated with the processing of H-3 contaminated oils. Releases, for the last quarter of 1989, are primarily dominated by C-14 and H-3. All other nuclides are present in much lesser amounts, typically by four or more orders of magnitude. Some radionuclides, not listed in Table 1-33, were reported to be at or below limits of detection, and were not reported by SEG. The decontamination factors (DF) were calculated for those radionuclides with reported activity for both waste and stack emissions. The DF is expressed as the ratio of radioactivity reported in waste to that observed in stack emissions. The estimated DFs typically range from 1,000 to 10^{+11} except for H-3, C-14, and I-129. For these radionuclides, the DF is one.

1.4.2.2 Advanced Nuclear Fuels Incinerator. The Advanced Nuclear Fuels (ANF) facility is located in Richland, WA. The ANF Specialty Fuels Building houses a dual-chamber controlled-

Table 1-31. Savannah River Site beta-gamma incinerator processed waste volume and activity: 1986-1988[a]

Part I: 1986 Waste Volumes and H-3 Activity

Month Processed	Solid Waste (cubic feet)	Liquid Waste Oil - Gal.	Liquid Waste H-3 - Ci
Mar.	3,664	--	--
May	2,608	--	--
Jun.	443	--	--
Oct.	80	--	--
Nov.	48	435	49
Dec.	--	3,600	409
	---	---	---
Total	6,843	4,035	458

Part II: 1987 Waste Volumes and H-3 Activity

May	--	4,276	485
Jun.	--	6,950	789
Jul.	--	2,995	335
Aug.	--	504	57
Sept.	--	400	45
Nov.	--	3,800	431
Dec.	--	3,704	420
	---	---	---
Total		22,629	2,562

Part III: 1988 Waste Volume and H-3 Activity

Jan.		1,312	149

(a) Data obtained from DOE/SRS staff, submittal dated 9/28/90. Only H3 has been reported for the waste cited above. Incinerator shutdown Jan. 1988.

Table 1-32. SEG incinerator waste, emissions, ash radionuclide distribution for 1989[a]

Radionuclides	Waste	Releases or Contents - Ci[b] Emissions	Ashes	DF Ratio Waste/Emission
H-3	1.1E-02	1.1E-02	ND	1
C-14	2.2E-02	2.2E-02	ND	1
Cr-51	1.5E-O1	ND	9.9E-03	-
Mn-54	1.5E-O1	1.2E-07	1.5E-02	$1O^6$
Fe-55	8.2E-O1	ND	ND	-
Fe-59	1.8E-02	ND	ND	-
Co-57	2.2E-04	ND	2.5E-04	-
Co-58	3.5E-O1	ND	ND	-
Co-60	5.3E-O1	1.4E-06	1.1E-O1	$1O^5$
Ni-63	2.4E-O1	ND	ND	-
Zn-65	5.8E-02	ND	3.5E-03	-
Sr-89	1.3E-03	ND	O.OE-OO	-
Sr-90	1.OE-02	1.1E-14	ND	10^{11}
Nb-95	2.5E-02	ND	ND	-
Zr-95	9.4E-03	ND	2.3E-03	-
Tc-99	5.2E-04	1.5E-07	ND	10^3
Ag-110m	6.1E-03	1.1E-06	6.6E-03	10^3
Sn-113	3.4E-05	ND	ND	-
Te-125m	1.5E-06	ND	ND	-
Sb-124	2.5E-03	ND	ND	-
Sb-125	6.4E-04	2.6E-07	3.9E-03	$1O^3$
I-129	5.1E-06	5.1E-06	ND	1
I-131	2.0E-08	2.0E-14	ND	10^6
Ce-144	2.0E-03	ND	1.8E-03	-
Cs-134	2.3E-O1	5.3E-07	6.1E-03	$1O^5$
Cs-137	7.3E-O1	3.4E-06	2.6E-02	$1O^5$
Hf-181	5.2E-05	ND	ND	-
Tl-201	2.1E-05	ND	ND	-
Ra-226	ND	ND	1.2E-06	-
Th-232	3.3E-07	ND	ND	-
U-238	1.3E-03	4.8E-09	1.3E-03	$1O^5$
Pu-241	2.5E-04	ND	ND	-
Am-241	ND	ND	1.OE-04	-
Cm-242	2.0E-07	ND	ND	-
TRU	3.4E-06	ND	ND	-

(a) Extracted from correspondence between SEG and U.S. EPA Region VI, letter not dated. Represents revised data for the months of Oct., Nov., and Dec., 1989 only.

(b) All values are rounded off and entered as exponential notation; i.e., 1.1E-02 means 1.1×10^{-2}. ND means no data.

Table 1-33. SEG incinerator stack emissions - 4th Quarter 1989[a]

Radionuclides	Stack Releases - Ci(b) October	November	December
H-3	1.7E-11	5.2E-03	5.5E-02
C-14	1.8E-1O	4.9E-03	1.7E-02
Mn-54	O.OE-OO	O.OE-OO	1.2E-07
Co-60	O.OE-OO	2.8E-07	1.1E-06
Sr-90	O.OE-OO	2.4E-14	8.8E-14
Tc-99	1.5E-07	8.2E-13	6.7E-13
Ag-110m	O.OE-OO	5.8E-07	4.2E-07
Sb-125	6.4E-04	2.6E-07	3.9E-03
I-129	O.OE-OO	O.OE-OO	5.1E-06
I-131	1.9E-14	O.OE-OO	O.OE-OO
Cs-134	O.OE-OO	3.6E-07	1.7E-07
Cs-137	O.OE-OO	2.5E-06	9.3E-07
Total-U	4.8E-09	2.1E-13	2.7E-13

(a) Extracted from correspondence between SEG and U.S. EPA Region VI, letter not dated. Represents revised data for the months of Oct., Nov., and Dec., 1989 only.

(b) For the month of October, emissions represent releases from both the incinerator and oil burner. November and December emissions are for the incinerator only; oil burner was shutdown. Other radionuclides, if present, were below the detection limits and were, therefore, not reported by SEG. All values are rounded off and entered as exponential notation; i.e., 1.7E-11 means $1.7 \times 1O^{-11}$.

Packages destined for incineration are sorted and then surveyed to assess the amount of uranium present. All waste fed to the incinerator is packaged in cardboard boxes to facilitate the combustion process and minimize ash generation. Ash generated after each burn is collected and assayed for uranium (UO_2) content. If the uranium concentration is found to be elevated, the ash is subjected to a leaching process to recover the uranium. If uranium is present at low concentrations, ashes are disposed of at a low-level radioactive waste disposal site.

The ANF incinerator off-gas treatment system is comprised of several components, which include: a quench column, a venturi scrubber, a packed column, a mist eliminator, a re-heater,

and a set of HEPA filters. The stack monitoring system consists of a continuous sampling train, which pulls a sample through a particulate filter paper. The filter is removed on a weekly basis and analyzed for alpha radioactivity. Current radionuclide emissions are typically around 10^{-15} uCi/mL (ANF90).

Waste volumes processed over the past 2 years are summarized in Table 1-34. A total of about 49,100 cubic feet of solid waste and 2.9 million gallons of liquid waste were processed in 11 burn cycles. The duration of a typical burn cycle ranges from about 100 to 1,400 hours, averaging about 600 hours. The incineration of these wastes resulted in the generation of 538 cubic feet of ash. A total of 4,748 kg of uranium was processed and recovered during this two-year period. The overall volume reduction factor, using solid waste and spent HEPA filter data, is estimated to be about 100.

Not included in these totals, ashes excepted, are the waste volumes and amounts of uranium associated with the incineration of spent HEPA filters. Spent HEPA filters from the off-gas treatment system are periodically replaced and processed to reduce waste volumes and recover any trapped uranium. The total volume of spent HEPA filters is about 3,300 cu.ft., also generated over the 11-burn cycle. A total of 7.3 kg of uranium was recovered from the incineration of spent filters.

1.4.3 Institutional Incinerator Operations

Typical incinerator effluents were estimated from the survey data described earlier (CRC84). The nuclear fuel-cycle incinerators were excluded because they are not typical of the large number of institutional facilities with incinerators, represent only a small number of facilities, and process unique waste forms. A sample of institutional licensees that incinerate waste was selected and the activities of the incinerated waste were averaged. For estimating effluents, it was assumed that 100 percent of the activity incinerated was vaporized and released in the

Table 1-34. Advanced Nuclear Fuels solid and liquid waste volumes and uranium mass [a]

Run[b] No.	Solid Waste[c] Vol.(ft^3)	Solid Waste[c] U(kg)	Liquid Waste Vol.(gal)	Liquid Waste U(kg)	Ashes Vol.(ft^3)	Ashes U(Kg)
1	1,418	2.0	146,035	0.063	4.5	1.6
2	850	21.5	147,150	0.779	4.0	25.7
3	1,530	34.1	145,695	0.662	6.8	46.9
4	1,495	46.9	86,112	1.275	10.9	59.1
5	3,773	170.7	184,873	2.633	31.4	159.1
6	6,580	496.6	459,967	5.414	63.0	490.9
7	8,743	860.8	698,927	10.834	114.6	994.5
8	2,887	288.9	117,931	4.256	36.9	384.6
9	7,210	663.4	335,018	7.948	77.0	742.9
10	9,534	1,009.0	387,799	13.502	120.0	1,145.3
11	5,054	598.5	233,452	7.667	68.5	697.6
Total:	49,074	4,192.4	2,942,959	55.033	537.6	4,748.2

(a) Extracted from ANF submittal dated 8/14/90. See text for details (ANF90).

(b) Data represent incinerator operation from 8/26/88 to 7/16/90. Each burn cycle is about 600 hrs, on the average.

(c) This tabulation does not include the incineration of spent HEPA filters which are periodically removed from the incinerator off-gas treatment system. This total volume amounts to about 3,300 cu.ft. generated over the 11 runs cited above. A total of 7.3 kg of uranium was recovered from the incineration of such spent filters.

exhaust. This approach is in fact used by many facilities; it is simply assumed that all of the radioactivity is exhausted through the stack (EGG80). The amount of radioactivity which is introduced in the incinerator is limited, knowing its operating characteristics, to ensure that airborne radioactive releases do not exceed the maximum permissible concentrations allowed by State or Federal regulations. This approach is usually very conservative in assessing the impact at downwind locations for most radionuclides, with the exception of tritium, carbon-14, and radioiodines. Many facilities also have no off-gas scrubbers or filters and do not routinely monitor airborne emissions.

The predominant nuclides are shown in Table 1-35. The average release rates are given in curies per year. Tritium and sulfur-35 are the most predominant radionuclides. Carbon-14, phosphorus-32, chromium-51, and iodine-125 are characterized by lower release rates.

1.4.4 Studsvik Incinerator Operations

Table 1-36 summarizes emissions from the Studsvik Incinerator Facility located in Sweden (IAE89). This facility processes wastes mainly from nuclear power plants, hospitals, and fuel fabrication facilities. Some of the waste also comes from other European countries. The IAEA report notes that the cited yearly releases are all in compliance with Swedish National Institute of Radiation Protection Standards. This facility was chosen because it processes waste of varying forms and the radionuclide distribution includes alpha emitters. The incinerator (multistage excess air system) does not use HEPA filters, but rather relies on a bag filtration system made of polytetrafluorethylene. In 1983, the radionuclide emissions were associated with the processing of 355 metric tons of waste (HET90). In 1984, the total waste volume incinerated was reported to be 435 metric tons (HET90). For either year, releases consist primarily of H-3 and I-125, while the other radionuclides are lower by several orders of magnitude.

Table 1-35. Effluent release rates for low-level radioactive waste incinerators - 1984

Major Radionuclide	Average Release Rate (Ci/yr)
H-3	0.1
C-14	0.05
P-32	0.07
S-35	0.1
Cr-51	0.01
I-125	0.015

(a) Values are as reported and are not adjusted for the survey response rate. Source: CRCPD Survey, DOE/ID/12377, 1984 (CRC84).

Table 1-36. Radionuclide emissions from the Swedish Studsvik Incinerator Facility [a]

Radionuclide	Airborne Emissions (Ci/yr) 1983	1984 (Jan-Aug)
H-3	1.4E+O(b)	4.3E+1
Co-60	--	2.7E-4
Ag-110m	3.0E-4	--
I-125	8.9E-2	1.2E-1
I-131	5.9E-4	3.3E-3
Cs-134	2.5E-5	--
Cs-137	1.9E-4	7.3E-5
Alpha emitters	9.5E-6	--
Waste quantity processed (metric tons)	355	435 (full year)

(a) Extracted from IAEA Technical Report Series No. 302, Table XXIX, 1989 (IAE89) and technical correspondence (HET90).
(b) Exponential notation, 1.4E+O means 1.4 and 1.2E-1 means 0.12.

1.5 OPERATIONS AND MAINTENANCE PRACTICES AND PROCEDURES

Operations and maintenance practices vary with the particular type of incinerator. Specific practices pertaining to the various components of incinerator systems are beyond the scope of this report. However, a few major overall considerations are described below.

A fundamental characteristic of incinerators is that they are designed to function best under strictly controlled, predictable, steady-state conditions. Uncontrolled variations in the quantity and physical/chemical characteristics of the waste feed material can have a significant negative effect both on incinerator performance in terms of the combustion process and on the potential for air emissions. It is difficult, if not impossible, for incinerators to be capable of responding rapidly to wide fluctuations in the nature of the feed in such parameters as btu content, ash quality and quantity, pH of the off-gases, etc. Designing the unit for worst-case conditions it may encounter for each parameter will not be a satisfactory solution because optimizing for one condition will likely adversely influence performance in another area. For example, maintaining the upper limit of temperature for one type of waste will lead to slagging with other types of waste. Thus, analysis and control of feed material is a crucial aspect of operations. For radioactive waste, this involves the monitoring of the physical/chemical nature of the feed (sorting of low-level waste according to combustibility, shredding of dry material, etc.), as well as its activity levels and radionuclide content.

Process monitoring and control procedures are used to ensure the proper functioning of the actual incineration process. Chapter 2 describes the focus areas for these procedures. The need for attention to following proper procedures in monitoring, treatment, and handling of off-gases and solid residues (ash) obviously is of particular importance for radioactive and mixed waste incineration. Monitoring technologies are described in Chapter 3.

1.6 REGULATORY REQUIREMENTS

1.6.1 Nuclear Regulatory Commission Licensing

The Atomic Energy Act (AEA) of 1954, as amended, and the Energy Reorganization Act of 1975 govern the Nuclear Regulatory Commission's (NRC's) authority to regulate incineration of low-level radioactive waste (LLW). The NRC grants licenses for purposes authorized by the AEA, subject to favorable findings related to public health and safety, protection of the environment, and the common defense and security. The NRC implements the AEA with respect to incineration through Title 10 of the Code of Federal Regulations Parts 20, 30, 40, 50, 51, and 70. The NRC exercises its statutory authority over license holders by imposing a combination of design criteria, operating parameters, and license conditions at the time of construction and licensing. It ensures that the license conditions are fulfilled through inspection and enforcement activities.

By formal agreement with the NRC, a total of 29 States have assumed regulatory responsibility over byproduct materials, source materials, and limited quantities of special nuclear materials. These States, in addition to the responsibilities granted by the NRC, have in some cases adopted additional regulations. For example, Natural and Accelerator-Produced Radioactive Material (NARM) is covered by some State regulations, although there are presently no universally applicable regulations for NARM materials.

The NRC's regulations require an analysis of probable radioactive effluents and their effects on the population near licensed facilities. The NRC also ensures that all exposures are as low as is reasonably achievable (ALARA) by imposing design criteria for effluent control systems and equipment. After a license has been issued, licensees must monitor their emissions and set up an environmental monitoring program to ensure that the design criteria and license conditions have been met. For practical purposes, the NRC has adopted the maximum permissible concentrations developed by the National Council on Radiation Protection and Measurements (NCRP) to relate effluent concentrations to exposure.

In 1981, the NRC issued a policy statement on LLW volume reduction which encourages licensees to minimize the volume of LLW generated and to use volume reduction techniques, such as incineration, as a means of reducing the amount shipped for disposal by burial. The policy statement clearly signaled the NRC's intent to license, on an expeditious basis, incineration for volume reduction.

The NRC adjusts the review and approval process for applications, dependent on whether the incinerator is to be used by an institution to reduce its own waste volume, by a commercial entity to process waste generated by other institutions, or by a nuclear power reactor site.

Applications for institutional incinerators are reviewed by the licensing groups in the Regional Offices. The criteria for approval are described in Appendix 1. About 70 NRC institutional material licensees have been authorized to operate LLW incinerators for volume reduction of their own waste as of December 1989. Approximately 50 were authorized by the Agreement States as of May 1988.

Applications for commercial incinerators are normally submitted to the appropriate NRC Regional Office. The information to be provided is the same as outlined for institutional incinerators, although additional information may be requested as appropriate to assess the potential impact on public health and safety and the environment.

Licensing of an incinerator at a nuclear power plant can follow one of several paths. The incinerator vendor can submit a topical safety report to the NRC Office of Nuclear Reactor Regulation (NRR) for review. The topical report contains the process description, equipment description, design basis and process parameters, equipment arrangement, sampling/monitoring equipment description, quality assurance plan description, a discussion of applicable Federal regulations, and estimated releases for the incinerator. Topical
reports judged by NRR as acceptable may then be referenced in future license applications for light water reactors. At such time, NRR would perform only a site-specific review of the

process control program, effluents, monitoring systems, accident analysis, fire protection, operational procedures, and occupational exposures.

Authorization to operate an incinerator at a nuclear power reactor can be granted as an amendment to the existing reactor license under 10 CFR 50.59 and 50.92 if the proposed activities or facility modifications could result in a change in technical specifications or reveal an unreviewed safety question. The NRC defines an unreviewed safety question as:

1) if the probability of occurrence or the consequences of an accident or equipment malfunction important to safety issues previously evaluated in the safety analysis report is increased,

2) if there exists the possibility for an accident or malfunction of a different type than any previously evaluated in the safety analysis report, or

3) if the margin of safety as defined in the basis for any technical specification is reduced.

Typically, the NRC would impose additional operational requirements in the plant's technical specifications. For example, if it were proposed to burn contaminated oils, the plant's radiological effluent technical specifications would impose limits on the associated airborne radioactive releases. Recent license amendments have typically limited offsite doses to 0.1 percent of the limits specified in Appendix I to 10 CFR 50, which limit whole-body doses to 5 mrem/yr and 15 mrem/yr to any organ (NRC86, NRC88).

In the case of a nuclear power reactor still under construction, the proposed incineration of radioactive waste would be addressed in the Final Safety Analysis Report. This approach would also be used for other types of nuclear facilities licensed under 10 CFR Parts 30, 40, and 70. In such instances, the licensee would be required to present a report, outlined in Appendix 2, addressing a number of related safety topics. The licensee would also be required to submit an environmental report describing the potential impacts associated with the proposed incinerator.

The nuclear power plant applicant would also have to demonstrate that the disposal of ash and waste products would be integrated in the existing radioactive waste management program. More specifically, it must be shown that the waste thus generated will meet the requirements of 10 CFR 61, titled Management and Disposal of Low-Level Wastes by Shallow Land Burial. These regulations require waste generators to characterize waste forms and characteristics, as given in Part 60.56, and segregate such waste according to their classification (A, B, or C) as specified in Part 60.55. Finally, the shipment of this waste must comply with the requirements stipulated in 10 CFR 20.311 addressing transfer for disposal and shipping manifests, and the waste generator must meet any other requirements imposed by the low-level radioactive waste disposal site. The disposal sites operate under licenses, issued by their respective Agreement State, which impose site-specific requirements. These requirements are also imposed on waste generators that ship waste to these facilities.

1.6.2 Resource Conservation and Recovery Act (RCRA) Requirements

All incinerator operations involving the processing of hazardous waste (including mixed waste) must have a RCRA permit, approved by EPA or an authorized State, to operate within the law. EPA regulations in 40 CFR 270 indicate the minimum information to be provided by a facility in order to obtain a permit. Individual States may impose additional or more stringent requirements. RCRA permit applications are submitted in two sections, Part A and Part B.

Part A provides general information about the facility, including its location, owner, principal products and processes, hazardous waste handled, and all permits and construction approvals received or applied for under other programs. Part B must provide more detailed information about the location and operation of the facility. The application must indicate compliance with the regulations of 40 CFR 264 aimed at protecting the public health and environment. The following specific information must be contained in Part B:

a. chemical and physical analyses of the waste to be handled at the facility;

b. a description of security procedures;

c. a description of procedures, structures, or equipment designed to prevent hazards, run-off and contamination of water supplies, and undue exposure of personnel to hazardous waste; and to mitigate the effects of equipment failure or power outages;

d. facility location information including whether the facility is located in a seismically active area or 100 year floodplain, both of which require additional detailed evaluation;

e. an outline of the personnel training program;

f. a copy of the facility's insurance policy or other comparable documentation;

g. a topographic map showing, among other things, the legal boundaries of the facility, surrounding land uses, access control (gates, fences), barriers for drainage or flood control, and location of operational units within the site;

h. assurances of financial responsibility in the event of damages incurred during or as a result of operations and for closure;

i. a trial burn plan or comparable information, as outlined in 40 CFR 270.19(C).

The trial burn is required before a permit is granted. Its purpose is to provide evidence that the incinerator meets the RCRA performance and operating standards (ASM88).

1.6.3 State Regulations

The regulation of air emissions from radioactive and mixed waste incinerators may also be governed by the State in which the incinerator is located. The 29 NRC agreement States mentioned in Section 1.5.1, are bound by formal agreements to adopt requirements, applicable to certain classes of licensees,
that are consistent with and serve in lieu of NRC regulations. Included in such regulations are concentration limits for release of effluents, by radionuclide, to unrestricted areas. These regulations would apply to commercial incinerators or incinerators operated by hospitals, clinics, or other research and industrial facilities. Federal facilities, such as the DOE incinerators, are exempted from these regulations. The 29 Agreement States are listed below.

Alabama	Kansas	North Carolina
Arizona	Kentucky	North Dakota
Arkansas	Louisiana	Oregon
California	Maryland	Rhode Island
Colorado	Mississippi	South Carolina
Florida	Nebraska	Texas
Georgia	New Hampshire	Tennessee
Idaho	New Mexico	Utah
Illinois	New York	Washington
Iowa	Nevada	

The State of Illinois, as one example of an NRC Agreement State, has developed and adopted statutes and regulations (32 Illinois Administrative Code, Chapter II) which cover, among other activities, the licensing and operation of radioactive waste incinerators. Part 340 of the regulations, which is a parallel to the NRC's Title 10 Part 20 regulations, provides "Standards for Protection Against Radiation." Within Part 340, Section 340.3050 states that "No licensee or registrant shall incinerate radioactive material for the purpose of disposal or preparation for disposal except as specifically approved by the Department pursuant to Sections 340.1060 and 340.3020." Section 340.1060 addresses concentrations of radioactivity in effluents to unrestricted areas. Concentration limits by radionuclide are provided in Appendix A, Table II, of Part 340. Section 340.3020 addresses the method of obtaining approval of proposed disposal procedures. Copies of these regulations are provided as Appendix 3.

It is important to note that agreement state regulations governing air emissions apply in addition to EPA NESHAPS regulations. In Tennessee, for example, the commercial SEG incinerator holds a materials license from the State, and is thus subject to Tennessee's radiation protection regulations, which are equivalent to the NRC Part 20 regulations. It is also subject to the EPA NESHAPS regulations for radionuclides. The same situation applies to the DSSI incinerator in Kingston, Tennessee. However, radioactive air emissions from the DOE Oak Ridge TSCA incinerator are regulated solely by the EPA NESHAPS requirements. While authority for implementation of EPA regulations can also be delegated to states, Tennessee does not have plans at present to seek delegation of authority from EPA for radionuclide NESHAPS

regulations. Tennessee does have permit authority for nonradioactive air emissions from the TSCA incinerator.

Chapter 1 References

ANF90 Advanced Nuclear Fuels Corporation, Richland, WA, correspondence to U.S. EPA, dated August 14, 1990, ANF file reference No. CWM:90:118.

ASM88 Hazardous Waste Incineration, A Resource Document, American Society of Mechanical Engineers, ASME Research Committee on Industrial and Municipal Wastes, January 1988.

BAR_ Barton R.G. et al. Analysis of the Fate of Toxic Metals in Waste Incinerators, Energy Environmental Research Corporation and Environmental Protection Agency.

BUH89 Thomas Buhl; "Assessment of Radiation Doses and Resulting Health Risks From the Controlled-Air Incinerator," Los Alamos National Laboratory, July 1989.

CAR_ Cargo, C.H.; PREPP Criticality Control, EG&G Idaho, Inc.

CRC84 Conference of Radiation Control Program Directors; CRCPD Survey, DOE/ID/12377, 1984, Frankfort, KY.

DOE89 Department of Energy; Integrated Data Base for 1989: Spent Fuel and Radioactive Waste Inventories, Projections, and Characteristics, DOE/RW-0006, Rev. 5, November 1989.

DOE89a Department of Energy; Air Quality Permit Application for the Proposed Low-Level Waste/Mixed Waste Incinerator, Technical Area 50, Building 37 Los Alamos National Laboratory, Los Alamos, NM, February 1989.

DOE89b Department of Energy; Environmental Restoration Waste Management Five-Year-Plan, DOE/S-0070, December 1989.

DOE90 Department of Energy; Final Supplement Environmental Impact Statement, Waste Isolation Pilot Plant, DOE/EIS-0026-FS, (13 volumes) January 1990.

DUK85 Duke Power Company filing; "Oconee Nuclear Station Radioactive Waste Volume Reduction Incinerator," Letter to Harold R. Denton, NRC, from Hal B. Tucker, Duke Power, June 10, 1985.

DUK90 Personal communication between S. R. Phelps of S. Cohen & Associates, Inc., and David Vaught of Duke Power Company, April 6, 1990.

EGG80 Interim Report: Low-Level Waste, Institutional Waste Incinerator Program, EG&G, Idaho National Engineering Laboratory, EGG-WM-5116, April 1980.

EGG82 Radioactive Waste Incineration at Purdue University, EG&G, Inc. Idaho National Engineering Laboratory, DOE/LLW-12T, November 1982.

EGG88 Informal Report: Low-Level and Mixed Waste Incinerator Survey Report, EG&G, Inc. Idaho National Engineering Laboratory, EGG-LLW-8269, October 1988.

EPA87 U.S. Environmental Protection Agency; Mixed Energy Waste Study (MEWS), Office of Solid Waste and Emergency Response, Washington, DC, March 1987.

EPA89 U.S. Environmental Protection Agency; Draft Environmental Impact Statement for 40 CFR 191: Environmental Standards for Management and Disposal of Spent Nuclear Fuel, High-Level and Transuranic Radioactive Wastes, September 1989.

EPA90 U.S. Environmental Protection Agency; Hazardous Waste Management System; Identification and Listing of Hazardous Waste; Toxicity; Characteristics Revisions; Final Rule, Fed. Reg. Vol. 55, No. 61, 11798, March 29, 1990.

ERD76 Energy Research and Development Administration; Nuclear Cleaning Handbook, ERDA 76-21, Oak Ridge National Laboratory, October 1979 reprint.

ESC89 Eschenbach, R.C., et al., Process Description and Initial Test Results with the Plasma Centrifugal Reactor, Forum on Innovative Hazardous Waste Treatment Technologies: Domestic and International; June 19-22, 1989, Atlanta, GA.

FL089 Flowers, R. H. and Owen, R. G.; "Review of the packaging of LLW and ILW for disposal," Radioactive Waste Management 2, BNES, London, 1989.

FRA89 Francis, C.J., Starr, T.M., The ANF LLW Incinerator Design and Startup, Advanced Nuclear Fuels Corporation, Richland, WA, April 1989.

GAL__ Gale, L.G.; PREPP Incinerator Partitioning Studies, EG&G Idaho, Inc. and IT Corporation.

HET90 Technical correspondence from Mr. Frank Hetzler (Studsvik Nuclear) to Mr. Larry Coe (SC&A, Inc.), dated February 5, 1990.

HUT90 Telephone communication between Mr. David Hutchins, LANL, and Mr. Jean-Claude F. Dehmel, , Inc., April 24, 1990.

IAE89 International Atomic Energy Agency; Treatment of Off-Gas from Radioactive Waste Incinerators, Technical Reports Series No. 302, Vienna, 1989.

INEL88a The Idaho National Engineering Laboratory Site Environmental Report for Calendar Year 1988, DOE/ID-12082(88), June 1989.

INEL88b Environmental, Safety and Health, Office of Environmental Audit, Environmental Survey, Preliminary Report, Idaho National Engineering Laboratory, DOE/EH/OEV-22-P, September 1988.

INEL88b Environmental, Safety and Health, Office of Environmental Audit, Environmental Survey, Preliminary Report, Idaho National Engineering Laboratory, DOE/EH/OEV-22-P, September 1988.

LAN83 Landolt, R.R.; Evaluation of a Small, Inexpensive Incinerator for Institutional Radioactive Waste, Health Physics, Vol. 44, No.6, pp. 671-675, June 1983

LUK90 Mr. Thomas Lukow, DOE/RFP submittal to U.S. EPA, dated Oct. 29, 1990

NRC83 Nuclear Regulatory Commission; Incineration of a Typical LWR Combustible Waste and Analysis of the Resulting Ash, NUREG/CR-3087, Battelle Pacific Northwest Labs, May 1983.

NRC86 Nuclear Regulatory Commission; Amendments No. 42 and 53 to Operating Licenses No. NPF-15, Radioactive Effluents, San Onofre Nuclear Generating Station, Units 2 and 3, August 20, 1986.

NRC88 Nuclear Regulatory Commission; Amendments No. 115 and 101 to Operating Licenses No. DPR-58 and DPR-74, Radioactive Effluents, Donald C. Cook Nuclear Power Plant Units 1 and 2, May 19, 1988.

PUC90 Mr. John Puckett, DOE/LANL submittal to U.S. EPA, dated Nov. 9, 1990.

RET90 Correspondence, Matt Mede, RETECH, Inc. to Jean-Claude F. Dehmel, SC&A, Inc., September 21, 1990.

RFP82 Rocky Flats Plant Fluidized Bed Incinerator, RFP-3249, Rockwell International, Golden CO, March 8, 1982.

RIN Ringel, H. and Rachwalsky, U.; Laboratory Experiments on the Volatilization of Heavy Metals during Waste Incineration, Kernforschungsanlage Julich GmbH, Germany.

TRI89 Trichon, M., Feldman, J.; Designing an Incinerator to Handle Mixed Waste, Roy F. Weston, Inc., paper presented at the 1989 International Conference on Incineration of Hazardous, Radioactive and Mixed Wastes.

UNS82 United Nations Scientific Committee; Ionizing Radiation: Sources and Biological Effects, 1982 Report to the General Assembly, Annex C, Technologically Modified Exposures to Natural Radiation, 1982.

WM85 Swearing, F.L.; Waste Management 1985, Incineration of Microspheres.

2. Technologies for Controlling Incinerator Processes and Radionuclide Emissions

2.1 PROCESS CONTROL TECHNOLOGY

Process controls maintain the incineration system within safe operating limits. This is accomplished by a series of control loops that use feedback control, feedforward control, or a combination, to manipulate the process variables to achieve safe and smooth operation.

For feedback control, information about the controlled variable is fed back to control a process variable. A typical feedback control loop requires a sensor to measure the variable, a transmitter to provide a feedback mechanism, and a controller to compare the measured value with the setpoint value and send a signal to a control element or an actuating device to effect a direct or indirect change in the controlled variable. Depending on whether the controller is an operator or an instrument, the control loop can be either manual or automatic. In automatic systems, the controller can exert control through one or more of the following modes:

On/off: The controlling element is either on or off.

Proportional: The signal to the control element and the resulting response are proportional to the measured deviation of the controlled variable from the setpoint.

Proportional plus Integral: Used to compensate for the inability of proportional control to achieve the setpoint value. The integral mode applies a signal to the control element that is proportional to the integral of the deviation. This causes the controller output to change as long as a deviation exists.

Derivative Action: The controller anticipates where the process is going by measuring the rate of change of the deviation from the setpoint and applies a control action proportional to the rate of change to stop the change.

For feedforward control, a variable which affects the controlled variable is measured and then a signal is sent to compensate for the change without waiting for the controlled variable value to change. Feedforward control improves the ability to respond to process disturbances; however, since it requires solution of an equation or process model, a combination of feedback and feedforward control is more desirable.

Selection of the type of control depends on the requirements of the particular system and the requirements of each control loop. A controlled variable that changes slowly or remains fairly constant could be controlled manually. Process water flowrate to a packed bed scrubber is an example of this kind of variable. A controlled variable that changes frequently or rapidly requires automatic control. Typical examples for incinerators are combustion air flows, supplemental fuel flows, and incinerator pressure.

The primary control loops for an incinerator are: waste, fuel, air and water flowrates; temperatures in different parts of the system; pressures in different parts of the system; excess oxygen concentrations; pH in the process water system; and levels in process water storage tanks. Incinerator control functions are summarized in Table 2-1 and described in Appendix 4.

2.2 PROCESS MONITORING TECHNOLOGY

Monitoring systems complement the control systems to ensure safe operation and prevent emissions of toxic and radioactive materials. Control systems are designed to keep the process variables within safe operating limits; monitoring systems take over whenever the process variables approach the operating limits. A properly designed monitoring system keeps the process variables within safe operating limits with a minimum disturbance to the system. The three levels of automatic monitoring are: alarms, feed cutoffs, and equipment shutdowns.

Table 2-1. Incineration System Control Functions

System	Variable Controlled	Sensor	Control Element	Constraints
Feed System	Solid Feedrate	Weigh Belt Weigh Scale	Screw Speed Scale Weight Setting	Maximum Feedrate, Primary Chamber Temperature, and High Gas Velocity (Secondary Chamber Residence Time)
	Liquid Feedrate	Flowmeter	Control Valve	Maximum Feedrate, Maximum Liquid Waste Pressure
Combustion Controls	Kiln Temperature	Thermocouple	Fuel Control Valve Water Control Valve	High Temperature, Low Temperature
Kiln	Excess Oxygen	Oxygen Meter Fuel Meter Air Flow Meter	FD Fan Damper FD Fan Speed	Low Oxygen High Carbon Monoxide
	Chamber Pressure	Pressure	ID Fan Damper	High Pressure (Low Draft)
	SCC Temperature	Flowmeter	Fuel Control Valve	High Temperature, Low Temperature, High Gas Velocity
	SCC Excess Oxygen	Oxygen Meter Fuel Meter Air Flow Meter	FD Fan Damper FD Fan Speed	Low Oxygen High Carbon Monoxide

Table 2-1. (Continued) - Page 2

System	Variable Controlled	Sensor	Control Element	Constraints
Controlled Air Incinerator	Primary Chamber Temperature	Thermocouple	Air Damper	High Temperature, Low Temperature
	SCC Temperature	Thermocouple	Air Damper	High Temperature, Low Temperature
Fluidized Bed	Temperature	Thermocouple	Fuel Control Valve Water Control Valve Air Damper	High Temperature, Low Temperature
	Excess Oxygen	Oxygen Meter	Air Damper	Minimum Oxygen, High Carbon Monoxide, Minimum Airflow
Air Pollution Control	Temperature	Thermocouple	Control ValveHigh/Low Temperature Minimum Process Water	
Quench System				
	pH	Glass Electrode	Neutralizing Liquid Control Valve	High/Low pH
	Level	Pressure	Control Valve	High/Low Level
	Total Dissolved Solids	Conductivity	Blowdown Valve	Maximum Dissolved Solids Content

Table 2-1. (Continued) - Page 3

System	Variable Controlled	Sensor	Control Element	Constraints
Acid Gas Removal				
Packed Scrubber	Liquid to Gas Ratio	Flowmeter	Water Control Valve	Minimum Water Flowrate
	Scrubber Water Flowrate	Flowmeter	Water Control Valve	Minimum Flowrate
	pH	Glass Electrode	Neutralizing Liquid Control Valve	High/low pH
Acid Gas Removal	Liquid to gas Ratio	Flowmeter	Spray Control Valve	Minimum Flowrate
Spray Dryer				
	Exit Temperature	Thermocouple	Spray Control Valve	Maximum Temperature
Venturi Scrubber	Liquid to Gas Ratio	See Packed Scrubber		
	Water Flowrate	See Packed Scrubber		

Table 2-1. (Continued) - Page 4

System	Variable Controlled	Sensor	Control Element	Constraints
	pH	See Packed Scrubber		
Particulate Removal	Water Flowrate	See Packed Scrubber		
Venturi Scrubber				
	Pressure Drop	Pressure	Pinch Valve or Recirculation Valve	High Vacuum, High Pressure Drop, High Temperature
Fabric Filter	Pressure Drop	Pressure	Air Dampers or Compressed air Valves	High Pressure Drop, High/Low Temperature
Wet Electrostatic Precipitator	DC Voltage	Sparking Rate	Sparking Rate Controller	Corona Discharge

Alarms warn the operator that a monitored variable is approaching an operating limit. This warning gives the operator time to check the problem and take corrective action. Any variable that causes a feed cutoff or equipment shutdown should be alarmed before its value reaches the limit for feed cutoff or equipment shutdown. Occurrence of feedcutoffs and equipment shutdowns are also alarmed.

Feed cutoffs are activated when a variable goes out of range in a manner that may produce emissions from the incinerator. Feed cutoffs do not shut down other parts of the system other than the feed system. When the affected variable returns to the operating limits, waste material feed is allowed to resume.

Equipment shutdowns are activated when a variable goes out of range in a manner that may create a dangerous operating condition or cause damage to the equipment. Any action requiring an equipment shutdown also requires a feed cutoff. Since an equipment shutdown is the last line of defense, this action causes maximum disturbance of the process. Shutdown systems should be hard-wired and independent of other controls. Separate sensors and transmitters should be provided for temperature, pressure, flow, etc. Signals requiring shutdowns should not be processed through the algorithm of a programmable controller.

All safety shutdowns and feed cutoffs should require a manual reset by the operator after the condition has been corrected, and the control console should be provided with a first-out feature that identifies the primary cause of the alarm, cutoff, or shutdown. All hardware should be designed to fail in a safe direction. For example, a fuel valve should be designed to fail closed. Safety shutdown systems require regular checking to ensure operability. A check should include inspection of the safety circuits and mechanisms to make sure that there has been no tampering, jumpering, clogging, galling, wearing, corroding, or other irregularity. Instruments should be calibrated on a regular schedule. Relays and valves should be actuated on a regular basis to prevent hangups when they are actually needed. Emergency vent valves are particularly prone to sticking if they are not exercised.

Incinerator monitoring sub-systems are summarized in Table 2-2 and described in Appendix 5.

2.3 EMISSION CONTROL TECHNOLOGY

Although the bulk of the radionuclides present in the waste will remain in the solid residue from the combustion chamber, some will be present in the incinerator off-gas. Some will combine with the carry-over particulates, others may volatilize from the high combustion temperatures into off-gas vapor. The off-gas may also contain noxious and/or corrosive gaseous constituents such as NO_3, CO, HCl, HF, and SO_2, depending on the chemical composition of the incinerated waste. The function of the emission control system is to clean the off-gas of particulates and radioactive, noxious, and corrosive gaseous components. The emission control system, consisting of components for removal of particulates and gases, must be incorporated in the incineration system to protect the environment against radiological as well as conventional chemical hazards.

Emission control systems perform various operations such as cooling, dust removal, acid gas removal, and hydrocarbon treatment. Each system will have a unique combination of cleaning equipment to fit the performance requirements of the incinerator and the waste feed. Two basic types of emission control systems are used. Wet systems utilize cooling or scrubbing devices to saturate the off-gas stream in intermediate steps, and then heat or dry the gas stream before final filtration to avoid moisture condensation on the filters. Dry systems do not saturate the gas stream, although water injection may be used for cooling. Dry emission control systems are usually used when the PVC content of the waste feed is low, because emission of HCl is not a problem. A typical system may include high temperature filtration, cooling, filtration or separation, adsorption, and high efficiency filtration. Wet emission control systems are used for treatment of off-gas when removal of HCl, SO_x NO_x or HF is required. Typical systems may include off-gas cooling, scrubbing, heating, and high efficiency filtration. The operation of both wet and dry emission control systems results in secondary hazardous/radioactive wastes, including filters, adsorption material, liquid scrubber solutions, and blowdowns. Some of these

Table 2-2. Incinerator Monitoring Subsystems

System	Variable Monitored	Trip	Feed Cutoff	Alarm	Records	Incinerator Type	Comments
Solid Feed	Shredder		X	X		All	Shredder must be running for proper feed preparation
	Feedrate				X	All	Feedrate must be monitored to satisfy regulatory requirements
Liquid Feed	Feedrate				X	All	See above
	Low Pressure		X	X		All	Required for adequate atomization
	High Pressure		X	X		All	High pressure may cause overfiring
	Low Temperature		X	X		All	Required for adequate atomization for liquid wastes that require heating
Atomizing Media	Low Pressure		X	X		All	Pressure is needed for adequate atomization
Limestone Injection	Feedrate or limestone-to-feed ratio		X	X	X	Fluidized Bed	May be required to ensure adequate acid gas removal
Primary Chamber	High Temperature	X	X	X		All	High temperature trip consists of shutting down primary chamber burners to protect equipment
	Low Temperature		X	X		All	Feed cutoff on low temperature is required to ensure adequate waste destruction

Table 2-2. (Continued) - Page 2

System	Variable Monitored	Trip	Feed Cutoff	Alarm	Records	Incinerator Type	Comments
Primary Chamber	Loss of Draft		X	X		All	Loss of Draft Feed Cutoff Required to Minimize Fugitive Emissions from the Incinerator
	Low Oxygen Concentration or Analyzer Malfunction		X	X	X	Fluidized Bed	Feed Cutoff Required to Ensure Adequate Waste Destruction
	High Carbon Monoxide Concentration or Analyzer Malfunction		X	X	X	Fluidized Bed	Feed Cutoff Required to Ensure Adequate Waste Destruction
Burner	There are separate monitoring systems for the primary chamber and secondary chamber burner systems						
	High Fuel Pressure		X	X		All	Applied Whenever Burner Is Operating
	Low Fuel Pressure		X	X		All	See Above
	Low Atomizing Pressure		X	X		All	For Fuel Oil Only
	Loss of Flame		X	X		All	Trip Applies on System Warm-up

Table 2-2. (Continued) - Page 3

System	Variable Monitored	Trip	Feed Cutoff	Alarm	Records	Incinerator Type	Comments
Burner (cont'd)	Lack of Air Purge	X	X	X		All	Applies on Initial Start-up and Afterburner Trips
	Combustion Air Pressure	X	X	X		All	
Secondary Chamber	High Temperature	X	X	X		All	High Temperature Trip Consists of Shutting Down Secondary Chamber Burners and Primary Chamber Burners to Protect Equipment
	Low Temperature		X	X		All	Feed Cutoff on Low Temperature Required to Ensure Adequate Waste Destruction
	Low Oxygen Concentration or Analyzer Malfunction		X	X	X	Rotary Kiln Controlled Air	Feed Cutoff Required to Ensure Adequate Waste Destruction
	High Carbon Monoxide Concentration or Analyzer Malfunction		X	X		Rotary Kiln Controlled Air	Feed Cutoff Required to Ensure Adequate Waste Destruction
	High Gas Velocity		X	X		All	Ensures Adequate Residence Time for Waste Destruction

Table 2-2. (Continued) - Page 4

System	Variable Monitored	Trip	Feed Cutoff	Alarm	Records	Incinerator Type	Comments
Air Pollution Control System							
Quench	High Exit Temperature	X	X	X		All	Trip Required to Protect Equipment
	Low Exit Temperature		X	X		All	Feed Cutoff Required to Prevent Clogging of Baghouses or Shorting of Dry Electrostatic Precipitators
	Low Coolant Flowrate	X	X	X		All	Trip Required to Protect Equipment.
Venturi Scrubber	Low Flue Gas Pressure Drop		X	X		All	Feed Cutoff Required to Prevent Excessive Emissions
	Low Scrubber Water Flowrate		X	X		All	Feed Cutoff Required to Prevent Excessive Emissions
	High Vacuum		X	X		All	Required to Protect Equipment
Fabric Filter	High Pressure Drop			X		All	Alarmed
Wet Electrostatic Precipitator	Low DC Voltage		X	X		All	Required to Prevent Excessive Emissions

Table 2-2. (Continued) - Page 5

System	Variable Monitored	Trip	Feed Cutoff	Alarm	Records	Incinerator Type	Comments
Packed Scrubber	Low Scrubber Water Flowrate		X	X		All	Feed Cutoff Required to Prevent Excessive Emissions
HEPA Filter	High Pressure Drop			X		All	Filter Requires Changeout
Carbon bed	High Pressure Drop			X		All	Replacement Required
General Subsystems							
ID Fan	Loss of Vacuum	X	X	X		All	Loss of Vacuum Trips All Burners and Activates the Emergency Vent
Instrument air	Low Instrument Air Pressure		X	X		All	Loss of Instrument Air Causes a General Trip.
Electrical	Loss of Power	X	X	X		All	Loss of Power Causes a General Trip.
Emission Monitors							
Gases:							
Carbon Monoxide			X	X	X	All	Regulatory Requirement and Efficiency Calculation
Carbon Dioxide					X	All	Used for Efficiency Calculation

Table 2-2. (Continued) - Page 6

System	Variable Monitored	Trip	Feed Cutoff	Alarm	Records	Incinerator Type	Comments
Oxygen			X	X	X	All	Regulatory Requirement
Total Hydrocarbons					X	All	
Nitrogen Oxides					X	All	
Sulfur Dioxide					X	All	

wastes may be processed by incineration. Others may have to be disposed of separately, and possibly immobilized before disposal.

As an example of emission control, the system used on the controlled air incinerator (CAI) at Los Alamos National Laboratory consists of an aqueous scrubbing system followed by a dry off-gas cleaning system. The scrubbing system includes a quench tower, high energy venturi scrubber, packed-column absorber tower, condenser, and a process system for recycled liquid. The downstream dry off-gas system includes a superheater, roughing or prefilter, H[PA filters, and an adsorption tower.

2.3.1 Removal of Particulates

Basically, particulates are removed by filtration, separation, and scrubbing techniques. Descriptions of major components follow:

2.3.1.1 Filtration

2.3.1.1.1 High Temoerature Filters. High Temperature Filters operate in the 1100-2000°F temperature range. At these temperatures, the filter elements are red hot contact surfaces on which unburned particles in the flue gas are incinerated. The ash falls off the filter elements during combustion and collects in the bottom of the filter housing.

Ceramic candle filters, made of silicon carbide, can be used at temperatures up to 2000°F. The cylindrical filter elements are suspended from support plates inside a refractory lined housing. When the operational pressure drop is exceeded, the candles are blown back by compressed air to clean the filters.

Ceramic fiber filters, made of plugs in fine-meshed expanded metal, operate at around 1300°F. A filter is built up of several plugs assembled vertically. The plugs are lined with a deposit of asbestos fibers. When the filter becomes clogged, it is cleaned and regenerated with new

asbestos. Because of the asbestos fibers used, these filters may not be suitable for use in the United States.

2.3.1.1.2 Baghouse Filters. Baghouse Filters consist of permeable bags made of teflon felt or glass fiber which can operate at temperatures up to 500°F. They are sometimes used as prefilters to reduce the clogging rate of HEPA filters.

Filter fabrics are usually woven with relatively large openings in excess of 50 microns in diameter. However, smaller particles are captured since filtration employs the combined effects of impact, diffusion, gravitational attraction, and electrostatic forces generated by interparticle friction. The dust layer itself also acts as a filter medium. When the filter surface resistance reaches its capacity due to dust build-up, it must be cleaned. Some cleaning mechanisms physically shake a bag section, and the particles drop to the bottom by gravity. Compressed air is also used to inflate the bag and loosen the dust cake, which falls to the bottom.

2.3.1.1.3 High Efficiency Particulate Air Filters. High Efficiency Particulate Air Filters (HEPA) are constructed of glass fiber mat which produces a particle removal efficiency of at least 99.97 percent for 0.3 micron particles of dioctylphthalate (DOP) aerosol. These filters are used for final cleanup of particulates, and will not remove gases. Nuclear grade HEPA filters must meet requirements specified by the Institute of Environmental Sciences (IES) "Recommended Tentative Practice for Testing and Certification of HEPA Filters, IES RP-CC-001-83-T."

HEPA filter assemblies are made up of individual cells that are typically 24 inches high, 24 inches wide, and 11 1/2 inches deep. The filter media consists of nonwoven corrugated glass fiber (typically boron silicate microfiber) that is folded into pleats, with a corrugated separator between each pleat if the media is flat. Adhesive is used to seal the media to a wood or metal frame. The cell, which may be covered with a metal cloth faceguard for protection, is mounted in the holding frame with a gasket or fluid seal to prevent the possibility of bypassing unfiltered gas around the filter. With normal adhesives, HEPA filters can operate up to 250°F. With

silicone adhesives, temperatures up to 500°F may be tolerated. For high temperatures up to 1000°F, glass packing mechanical seals may be used between the cells and the frame. HEPA filter media is treated with a water-resistant binder and will tolerate some humidity, however, excess moisture can plug the filter and result in failure by overpressure. Wood framed filters are unsuitable for systems with high moisture content since they will expand and warp when wet.

Since HEPA filters are an essential part of an emissions control system, particularly for radionuclides, they are monitored for pressure drop to ensure their integrity. HEPA filters are designed for a maximum clean pressure drop of 1 inch HzO. A pressure drop of 2 inches HzO indicates that the filter is dirty and has reached the end of its service life. The service life of a HEPA filter depends on the amount of particulates in the off-gas, and can be extended by removing larger particulates in upstream emission control equipment. Other operating parameters that indicate possible HEPA filter failure include high temperature and pressure. The sealant on a HEPA filter subjected to higher- than-design temperature for an extended period of time will degrade. An operating pressure higher than the HEPA's design pressure may rupture the filter media. A rupture would be indicated by a decrease in the normal filter pressure drop.

Nuclear grade HEPA filters must be tested while encapsulated for resistance to airflow and penetration in accordance with Mil-Std-282, DOP Smoke Penetration and Air Resistance of Filters, at the nominal rated capacity listed in Mil-F-51068 and at 20 percent of that capacity for penetration. The Mil-Std-282 procedure is known as the "hot" DOP test because thermally generated dioctylphthalate (DOP) particles are used to challenge the filter. The Q 107 penetrometer test apparatus must be used to ensure that the DOP particles are homogeneous in size (0.3 micron) in order to form a monodispersed aerosol.

The HEPA filter assembly to be tested is encapsulated in the test box to ensure that any leakage through the gasket or frame will contribute to the overall penetration. The overall penetration through the filter can not exceed 0.03 percent (100 percent-0.03 percent = 99.97 percent efficiency). This efficiency represents the average efficiency of this particular filter. There may be minute areas of the filter with greater penetration (gasket, frame, or element) but these are

diluted by the greater volume of clean air passing through the filter. The 20 percent flow test helps detect major pinhole leaks that may have been missed in the full flow test. At 20 percent flow a pinhole leak shows up approximately 25 times greater in proportion to total flow, compared to 100 percent flow. This is because the constriction of air through the pinhole is a function of the square of the velocity.

Even though all nuclear grade HEPA filters are factory tested, the Department of Energy retests each filter before shipment to the using facility. When the HEPA filters are installed, they are tested in-place per ANSI N 510 (standard for testing nuclear air cleaning systems). This in-place field test, called the "cold" DOP test, is done with a polydisperse DOP aerosol that has a particle size range from 0.1 to 3 microns. It is used to reveal the presence of any leaks in the system that may have resulted from shipping the HEPAs or from installation. It is not considered an efficiency test. The cold DOP test requires the challenge aerosol to be introduced into the airstream at a distance sufficiently upstream of the HEPA assembly to ensure proper mixing.

New types of HEPA filters are currently being developed to circumvent some of the inherent limitation of existing designs and materials. New HEPA filter designs rely on the use of woven glass-fiber cloth and aluminum separators. These modifications make the filters less susceptible to structural failure and blow-out, and permit the filters to be used at higher temperatures. Such filters are being manufactured in England and Germany. German licensing agencies have authorized their use at a few facilities and are now considering their installation at all new nuclear facilities (Bergman, Ruedinger-1986, Ruedinger-1988).

In the United States, Lawrence Livermore National Laboratory (LLNL), in cooperation with the industry, has developed a sintered stainless-steel HEPA filter (Bergman-1990a). The steel filtration media is made of sintered powder and sintered fibers. Powder grains and fibers are about 5 um in overall dimensions. The media is held in place by a steel mesh which sandwiches the powder grains or fibers in rigid pleats. The stainless-steel HEPA filter is less susceptible to structural failures and can withstand much higher operating temperatures than its glass-fiber

counterpart. One of the limitations of stainless-steel filters is that they have characteristically high pressure drops. For a given flow rate, the stainless-steel HEPA filter would have to be larger. Tests conducted by LLNL indicate that for a given flow rate and particle penetration, the stainless-steel HEPA filter would need about 3 times the filtration area of a glass-fiber HEPA filter. This limitation implies that existing off-gas systems could not be readily retrofitted since new filter housings would have to be installed to accommodate the much larger steel filters. Finally, LLNL has indicated that currently, such filters are expensive to make. It has been estimated that a filter rated at 1,000 CFM with a 1-inch pressure drop would cost about $200,000, compared to about $200 for a conventional glass-fiber HEPA filter (Bergman-1990b).

In addition to incineration emissions control, HEPA filters are used in virtually all nuclear facilities for air control. As a result, used HEPA filters are one of the largest single waste types. Used HEPA filters constitute a high volume, low density waste composed of wood or metal frames, organic binders and gaskets, glass fiber media, and hazardous and radioactive contaminants. HEPA filters used in low-level radioactive service can be disposed of by incineration. Pacific Northwest Laboratory (PNL) conducted tests on incineration of HEPA filters with simulated transuranic waste. The tests were performed on three incinerators; electrically heated controlled air, gas heated controlled air, and rotary kiln. The tests confirmed that all three incinerators could effectively process HEPA filters.

2.3.1.2 Separation

2.3.1.2.1 Cyclones. Cyclones remove particles greater than 10 microns from the gas stream and are normally used before other control devices such as an electrostatic precipitator or baghouse. Cyclones are often used downstream of the primary combustion chamber of a rotary kiln incinerator.

A cyclone removes particles by inertia. The gas entering the cyclone forms a vortex which reverses direction and forms a second vortex leaving the cyclone. Due to inertia, particulate

matter moves to the outside wall and drops out the bottom while the gas exits the top of the cyclone. The temperature range for cyclones is 400-1800°F (refractory lined).

2.3.1.2.2 Electrostatic Precipitators. Electrostatic Precipitators (ESPs) are very efficient at collecting small-size particulate material suspended in a gas stream. The gas stream passes through an electric field which induces an electric charge in the particulate matter. The charged particles collect on a grounded surface, or collector. Particulate matter is periodically removed from the collecting plates by an internal or external rapping system.

The resistivity of the particulate matter affects ESP design and performance. High resistivity particles do not give up their electric charge to the collecting electrode and build up on the collector. Low resistivity particles readily relinquish their charge to the collector, assume the collector charge, and are repelled back into the gas stream. A particle with the correct resistivity gives up part of its charge to the collector. The rate at which the charge dissipates increases as the dust layer builds on the collector. When the weight of the collected particles exceeds the electrostatic force available to hold the layer, it falls off or is knocked off by the rapping system.

Since material resistivity varies with temperature, the use of an ESP requires an operating range where the resistivity is within acceptable limits. The temperature limit for ESPs is usually 300 to 350°F. The off-gas velocity also affects ESP operation.

2.3.1.2.3 Wet Electrostatic Precipitators. Wet Electrostatic Precipitators (WESPs) differ from ESPs in the method of cleaning the built-up particles from the collector plate. WESPs use water sprays to saturate or supersaturate the incoming gas stream. The electric field charges the liquid droplets. The liquid droplets charge, collect, and wash away the particulates from the gas stream. Resistivity does not restrict WESP operation.

2.3.1.2.4 Ionizing Precipitators. Ionizing Precipitators consist of an ionizer followed by a packed bed. High voltage ionizer elements charge particulates in the gas stream as they enter

the unit. The ionizer elements are continuously water washed to prevent particulate build-up. The charged particles are removed in the packed bed. Particles above 3 microns are removed by striking the packing; smaller particles are removed by image-force attraction. The packed bed is continuously washed with water to remove the collected particles.

2.3.1.3 Scrubbing. Off-gas may contain NO_x, SO_x, HCl, HF, and radionuclides in the form of aerosols. These gases and particulates can be removed by scrubbing. The offgas is scrubbed using demineralized water or caustic solution which is circulated by the energy of the off-gas or an external pump. There are two types of scrubbers. The first, which includes the venturi scrubber and variable orifice scrubber, removes particulates. These scrubbers will also neutralize acid gases somewhat, but are not totally effective for gas removal. As a result they are usually followed by packed-bed scrubbers. The second, which includes the packed-bed scrubber, impingement tray scrubber, and spray dryer, removes acid gases. These devices will remove acid gases but are not very efficient at removing particulates from the off-gas stream.

Scrubber effectiveness is related to the pressure drop across the scrubber. Increasing the pressure drop causes greater turbulence and mixing which results in a more effective scrubbing action. Scrubbers operate on the principles of interception, gravity, impingement, and contraction/expansion. Interception occurs when a solid particle collides with a liquid particle. Gravity causes a particle passing near an obstacle to settle on it. When an obstacle is placed in a gas stream, the gas will flow around it while the particles will tend to impinge on it. Contraction in a gas stream produces condensation and turbulence which results in contact between solid particles and liquid droplets. When the gas stream is expanded, the particle laden droplets maintain direction while the gas can be diverted and separated.

A wet scrubbing system generates radioactive scrub liquor waste. Scrubbing solution is usually treated in a subsystem and recycled back to the scrubber. A typical subsystem consists of a heat exchanger to cool the scrub liquid before entering a circulation tank where it is neutralized with caustic. From the circulation tank it is pumped to a hydrocyclone to remove particulates and

then recycled back to the scrubber. The blowdown from the hydrocyclone is filtered to meet industrial wastewater treatment facility requirements.

2.3.1.3.1 Venturi Scrubbers. Venturi Scrubbers are high energy (high pressure drop), high efficiency scrubbers usually operating at pressure drops greater than 40 inches H_20 for submicron particle removal. Scrubbing liquid is injected upstream of the venturi throat into the contracted gas stream at velocities from 200 to 600 ft/sec. The off-gas then passes into an expansion section where separation occurs. Some scrubbers have adjustable venturi throats to maintain a desired pressure drop when the flow varies. The venturi only conditions the off-gas, and it must be followed by other separation equipment to remove the particulates from the gas stream.

2.3.1.3.2 Variable Orifice Scrubbers. Variable Orifice Scrubbers are similar to the venturi scrubber except a butterfly valve is used in the gas stream to create a venturi effect. The valve can be adjusted to maintain a fixed pressure drop as the flow changes.

2.3.2 Removal of Gases

Mechanical separation equipment is not effective for removal of volatile or semivolatile elements and compounds. A chemical or physicochemical liquid or solid absorption reaction is necessary to remove these constituents from the offgas.

2.3.2.1 Liquid Absorption. Liquid absorption uses water or chemical scrubbing solutions ($NaOH$, Na_2CO_3, $Ca(OH)_2$) to react with and remove soluble constituents in the off-gas.

2.3.2.1.1 Packed Bed Scrubbers. Packed Bed Scrubbers consist of vertical towers filled with packing material. The packing material provides a large surface area for the off-gas to contact the scrubbing solution. The scrubbing solution (usually water, caustic, or lime slurry) trickles down from the top of the tower through the packing. The off-gas moves up through the tower countercurrent to the scrubbing liquid and reacts with it.

2.3.2.1.2 Impingement Tray Scrubbers. Impingement Tray Scrubbers consist of perforated baffles and target baffles in a tower. A water level is maintained above the trays. The off-gas flows through the openings in the perforated plates, against the static water pressure, and around the target baffles. Scrubbing is caused by the turbulent mixing resulting from the off-gas passing through the trays.

2.3.2.1.3 Spray Dryers. Spray Dryers consist of cylindrical chambers into which a finely atomized absorbent such as lime slurry is sprayed. The acid gas in the off-gas stream reacts with the slurry droplets and forms particulates such as calcium chloride. These particulates are removed in downstream equipment such as a baghouse filter or electrostatic precipitator.

2.3.2.2 Solid Adsorption. Solid adsorption results from interaction of gas molecules with activated surfaces. Radioactive gases can be removed by carbon adsorbers, also known as high efficiency gas adsorbers (HEGA). HEGAs use granular activated coconut shell carbon impregnated to adsorb radioactive gases. Three types of adsorption occur: kinetic, isotopic exchange, and complexing or chemisorption. Kinetic adsorption of a gas molecule is the physical attraction of the molecule to the carbon granule by electrostatic forces. In isotopic exchange, carbon is impregnated with a stable isotope which exchanges with the radioisotope. In chemisorption, a radioactive iodine species attaches chemically to a stable impregnant that has the ability to share electrons. A typical impregnant is triethylenediamine (TEDA) or some other tertiary amine product. Carbon can be co-impregnated to take advantage of kinetic, isotopic exchange, and complexing adsorption mechanisms. The type of carbon impregnation and the residence time required in the HEGA will depend on the radionuclides to be adsorbed.

Carbon adsorbers usually consist of a number of 2-inch thick flat bed cells of charcoal, 24 inches long and 24 inches wide. Since the adsorption efficiency of charcoal beds is adversely affected by water vapor, they are normally preceded by condensers and heaters. Because of this, the off-gas is normally heated above the saturation temperature. However, the temperature is kept close to the saturation point since adsorber beds operate more efficiently at lower temperatures.

Carbon adsorber systems are leak tested in place with a test gas, normally freon 11. The penetration or bypass of the freon measured downstream of the adsorber is compared with the upstream measurement to obtain the mechanical efficiency. The carbon is tested periodically (per US NRC Reg. Guide 1.52) for its ability to adsorb. Sampler devices can be included in the adsorber design. This allows samples to be removed and sent to the lab for processing without removing the adsorber.

2.4 CAPITAL AND OPERATING AND MAINTENANCE COSTS

It is difficult to estimate incineration costs because of the many factors involved. The type of waste to be incinerated, the location, size and type of the incinerator, and regulatory requirements are some of the factors that affect cost. The costs associated with an incineration system include capital or fixed costs, and operating or annual costs. Cost elements in each of these categories are listed in Appendix 6.

The capital cost of a hazardous waste rotary kiln incineration system can vary from approximately $1 million for a 0.5 million Btu/hr unit to over $40 million for a 100 million Btu/hr unit. The total annual operating costs vary from $2 million for the 0.5 million Btu/hr unit to $20 million for the 100 million Btu/hr unit.

The capital and operating cost of a radioactive/mixed waste incinerator will be greater than that of a hazardous waste incinerator. The radioactive/mixed waste system must be designed to minimize radiation exposure to as low as reasonably achievable (ALARA) levels. This will necessitate design modifications such as shielding, allowances for easy access, materials of construction that facilitate decontamination, increased monitoring, and additional emission control equipment.

2.5 OPERATIONS AND MAINTENANCE CONCERNS

Appendix 7 contains tables summarizing general operations problems and preventative maintenance actions. Brief discussions of selected operations and maintenance concerns follow.

2.5.1 Pretreatment

Waste pretreatment is common to most incinerator systems. Accepted operations vary from hand sorting to automated shredding of bulk materials. Feed size reduction is desirable since the larger surface area in the reduced size permits more efficient combustion. Typical maintenance for a pretreatment system includes annual replacement of shredder gears, and periodic replacement of hoses, sensors, and electronics. Pretreatment considerations include the following:

> Sorting removes difficult to shred or nonincinerable materials, but is a time consuming process requiring additional installations such as a ventilated sorting area.
>
> Not sorting usually results in corrosive deposits at various steps in the process (fans, pumps, etc.). PVC, which in the incineration process forms chlorides and highly corrosive HCl gas, is a known operational corrosion source in gas phase incineration operations. In the absence of sorting, noncombustibles such as metals, glass, and organic liquids may be introduced into the system, and require downstream maintenance and cleanup of oxidation products and slag.

2.5.2 Feed System

The ram feeder is basically a piston operated component which forces waste into the combustion chamber. Maintenance and cleanup are required when material becomes lodged behind the ram face. Installation of a plug conveyor alleviates this problem. Piston seal failure is another routine operational problem, and seal replacement is generally required after several hundred hours.

The screw type feed mechanism experiences gradual wearing of surfaces caused by abrasive materials. Should the wear become extensive, a chromium based "sweat-on" paste or powder can be welded to the surfaces. These abrasion-resistant materials significantly extend operational time. Inspection for feed build-up would be a normal maintenance task during down time inspection.

2.5.3 Combustion Chamber

2.5.3.1 Rotary Kiln. Typical rotary kiln operation involves introducing the shredded feed into the rotating kiln operating at 1400-1800 °F for a nonslagging kiln (2800 °F for slagging kiln), with an accompanying air flow of several hundred thousand actual cubic feet per minute. Particle size distribution of the feed is the determining factor for feed entry or load point. Subsequent to initial incineration, the gases pass through a secondary combustion chamber in an atmosphere of 6-8 percent excess oxygen. For RCRA waste, the secondary combustion chamber operates between 1600-1800 °F with a residence time greater than 1 second. For TSCA waste (PCBs), a temperature of 2100-2400 °F and a residence time greater than 2 seconds is required. The solids from the primary combustion chamber go to the ash collection unit.

Routine maintenance procedures include inspection of the refractory lining to ensure integrity and inspection of drum internals for possible buckling which can result from uneven heating of the kiln and degradation of the kiln seals. Seal replacement, bearing lubrication, burner nozzle replacement, and general cleaning are standard maintenance procedures.

2.5.3.2 Fluidized Bed. Fluidized bed reactor operation involves introducing feed which has been pretreated so that the typical feed particle diameter is 0.5 inch or less. Air (typically at a temperature of 1020 °F for radwaste) is fed to a bed containing the feed materials via a hot air distribution system composed of nozzles connected to a header containing the hot air. As the velocity of the air increases, the granular bed material (feed) becomes suspended in a churning gas-solids mixture having physical properties similar to a fluid. Combustion gases are then processed in the air pollution control system. Typical maintenance procedures include cleaning

slag which forms in the system, maintaining air distributor nozzles which tend to foul after extended operation, instrument monitoring such as cleaning of the thermocouple wells which tend to gather hydrocarbon deposits from the bed, and recalibration of the oxygen and carbon monoxide monitors.

2.5.3.3 Controlled Air Incinerator. Operating procedures for a typical controlled air incinerator begin by feeding the pretreated waste to the first chamber (incinerator) either batchwise or quasi-continuously. The flow of air into the unit is limited to stoichiometric or preferably below stoichiometric conditions. The oxygen concentration is controlled to keep the local temperature (at each point of the combusted material) in the appropriate range (1300-1800 °F). The oxygen concentration is adjusted by partial recycling of off-gas after the water cooling step. The combustible solid particles and combustible gases leaving the bottom of the incinerator are then burned in the upper part of the first chamber and finally in the second chamber (afterburner). The temperature in the afterburner is maintained between 1650 and 2000°F by means of additional fuel. Total combustion is achieved if the oxygen concentration in the afterburner is greater than 6 percent by volume. This is typically verified by on-line oxygen analyzers. In the operating mode, wastes are charged batchwise with the feed depositing on a stationary hearth in the lower chamber where underfire air is used to support combustion of wastes at near stoichiometric conditions.

The secondary chamber is operated to provide the necessary residence time for completion of combustion reactions. Secondary chamber residence time is designed to operate with a minimum of 1.25 seconds hold-up time.

Typical maintenance procedures for a controlled air system include keeping the pathway from primary combustor to secondary combustor clean of agglomerated debris, thermocouple calibration, ensuring scanners are operating, and cleaning up slag that forms from noncombustibles entering the feed stream.

2.5.4 Air Pollution Control System

2.5.4.1 Quench Tower. Subsequent to incineration, hot gases and remaining particles are transferred to a quench tower. The quench tower serves to cool the hot incinerator gases and prevent high temperature damage to air pollution control equipment. The off-gas exits from the incinerator or from the afterburner at a temperature of 1650-2370 °F. The off-gas is cooled by injection of aqueous scrubbing solution directly into the off-gas stream. In the inlet of the quench tower, some of the scrubbing solution evaporates and the off-gas is rapidly cooled down. A long contact time is necessary to achieve a vapor-water balance for these temperature conditions. The temperature of the quench solution at the inlet is kept in the range of 100-115 °F by an external heat exchanger. The acids produced by washing gases such as SO.' HCl, and HF are neutralized by addition of NaOH or KOH. A part of the solution is removed continuously or batchwise from the cooling circuit and replaced by scrubbing solution from the system.

Typical operating problems involve maintaining proper water level in the tower sump, maintaining proper water flow rates, and controlling tower and water temperatures. Typical maintenance includes replacing nozzles and cleaning nozzle blockage and/or corrosion of the nozzle. This is a result of the action of the corrosive incinerator gases reacting with the moisture in the gases. Pump seal replacement, controls maintenance, and corrosion prevention (painting, surface passivation) are also typical.

2.5.4.2 Venturi Scrubber. The cooled gases and suspended liquids and solids are usually transferred to a high energy venturi where the particulates in the stream impinge with the water droplets carried from the quench tower. A demister system usually operates downstream of the venturi. Maintenance problems generally focus on corrosion.

2.5.4.3 Baghouse Filter. Baghouse filters made from teflon fleece are used for off-gas separation and filtration in a temperature range higher than possible for HEPA filters. These are also used as prefilters to reduce the clogging rate of HEPA filters.

When acid gases are present, the filter material used is normally teflon felt, formed into cylindrical bags. Normal operating conditions include a gas velocity of 1 ft/sec at a temperature of 390 °F and an absolute pressure of 30 psia. In such conditions, with the gas containing about 30 percent water by volume, the residual dust content after filtration is sufficiently low to be removed by HEPA filters. Standard operating procedures dictate that teflon filters not be operated above 446 °F for extended periods. Protection against overheating is obtained via a temperature alarm which automatically opens a bag filter bypass valve. If glass fibers are used, the operating temperature is in the range of 400-535 °F.

The baghouses are made of stainless steel to resist corrosive environments (HCl, SOz) up to temperatures of 750 °F. The collected dust accumulates in a hopper. A typical baghouse is covered by glass wool and aluminum sheeting. This cover acts as an insulator to prevent condensation on the wall and possible acid corrosion. The bags are sometimes mounted on metal frames attached to a venturi with a cleaning jet. Maintenance procedures involve inspection to detect breakage of the bags. Inspection is accomplished by unscrewing and removing a manhole plate.

2.5.4.4 Electrostatic Precipitators (ESP). In electrostatic precipitation, solid or liquid particulates suspended in a gas stream are negatively or positively charged and passed through an electric field, which forces the charged particles to separate from the gas stream and accumulate on collecting plates for proper operation. Insulation of the high voltage is necessary. Electricity is supplied as 25-50 KV DC.

The dust layer on the collecting plates is periodically removed by an internal or external rapping system. An internal drop hammer rapping system provides a greater force to the collecting plates, but external systems are easier to operate. However, the operating efficiency of the external system is lower since electrical energy must traverse the entire system to reach the collecting plates.

The operating range for electrostatic precipitators is generally dependent on the off-gas velocity, the presence of conductive material or water droplets, and temperature. The nominal temperature range is 300-340 °F. Maintenance centers on hydrocarbon deposits which can produce short circuits, possible corrosion of plates, and high collector plate loading.

2.5.4.5 Wet Electrostatic Precipitator (WESP). WESPs are similar to ESPs except there is a wet spray in the inlet section to cool the stream, adsorb gases, and collect coarse particles, and the collection electrode is wetted to flush away collected particles.

Operating procedures include maintaining the proper liquid-to-gas ratio (typically 5 gal/1000 scf) and a pressure drop from 0.1 to 1.0 inch of water. Typical maintenance includes periodic washing to prevent particle accumulation on the walls and unblocking nozzles.

2.5.4.6 Packed Tower. As previously discussed, packed towers are used to remove gaseous components. Operating and maintenance procedures center on water flow, water level, gas flow rate, tower water distribution, sump level control, unplugging the water flow system, removing sludge buildup in tower internals, and pump maintenance. Operating efficiency for removal of NO" or SO. is enhanced by addition of an oxidizing agent such as oxygen or hydrogen peroxide.

2.5.4.7 Condenser. Condenser operation involves cooling the water vapor and separating it from the stream. The condenser is merely a heat exchanger; it has no moving parts. Thus standard operations consist of maintaining a proper cooling water flow rate and controlling the temperature drop across the condenser. Maintenance includes removal of volatile metals which form, over time, in the tubesheet. Corrosion protection is accomplished via a polymeric gasket replacement, when required. Tube replacement, if erosion occurs, is another nonroutine maintenance function. Tube fouling, which reduces the exchanger performance because of a reduction in the overall heat transfer coefficient, is also a maintenance concern.

2.5.4.8 HEPA Filters. The loading capacity for HEPA filters is rather low compared to other filters. For this reason, HEPA filters are often protected by prefilters, particularly in high dust

concentration applications. Use of prefilters is advised if the dust concentrations exceed 0.06 lb/fts. Operating parameters for HEPA filters are listed in Appendix 7, Table 5.

2.6 INCINERATOR EFFECTIVENESS

Incineration converts combustible waste into ash that is nonflammable, chemically inert, and more homogeneous than the initial waste. Volume and weight reduction factors to 100 and 20, respectively, are possible for uncompacted dry active waste, although the overall reduction is generally lower in actual operation, depending on the method of ash immobilization and the volumes of secondary waste generated. Loading rate is another measure of effectiveness. Loading rate is a measure of incinerator efficiency described as feed flux; the higher the loading the more efficient the combustion. Actual operating values for this parameter are not available for LLW incinerators.

The efficiency of the off-gas cleaning system for radioactive waste can be obtained by calculating the system decontamination factor (DF). The system DF is the ratio of the radioactivity in the feed waste to the radioactivity released subsequent to incineration and off-gas treatment.

$$DF = \frac{\text{Input radioactivity}}{\text{Output radioactivity}}$$

The effectiveness, or removal efficiency, of a given air pollution control component is defined as:

$$\text{Removal efficiency} = \frac{\text{Input activity - output activity}}{\text{Input activity}} \times 100 \text{ percent}$$

$$= (1 - I/DF) \times 100 \text{ percent}$$

Decontamination factors and calculated removal efficiencies for air pollution control components are given below.

Component	Decontamination factor	Removal efficiency
Scrubber	50-100	98% - 99%
HEPA filter only	100	99%
HEPA filter + prefilter	1000	99.9%
Venturi	100	99.9%
Electrostatic precipitator	20	99.9%
Bag filters	15-58	93.33 - 98.3%
Condenser	100	99.9%
Baghouse filter system	100	.99%

Removal efficiency can also be expressed as a function of particle diameter. Listed below are actual decontamination factors and removal efficiencies for system components.

Particle diameter, um	Component	Decontamination factor	Removal efficiency (%)
2	Venturi	20	95
10	Venturi	85	98.82
20	Venturi	99.9	98.99
0.3	Bag filter	95	98.95
0.5	Bag filter	96	98.96
1	Bag filter	97	98.97

Ash distribution is a further measure of component effectiveness. Typical values obtained from the Trin Vercellese (Italy) incinerator are:

Component	Ash distribution, percent
Incinerator	93.7
Venturi	1.0
Bag filter	5.2
Beyond bag filter (balance of unit)	0.04

Lastly, the DF for metals is a measure of effectiveness. Typical decontamination factors for radioactive metal constituents are:

Metal	Equipment	
Co-60	Total system	15,000
Co-60	HEPA filter	200
Sr-90	Scrubber	3.5
Sr-90	HEPA filter	445

2.7 INCINERATOR RELIABILITY

Reliability is a measure of the dependability of a system, subsystem, or component. Reliability coupled with the maintainability of a system, subsystem, or component produces a term known as availability. In quantitative terms, availability is defined as:

$$A = \frac{MTBF}{MTBF + MTTR} \times 100 \text{ percent}$$

Where:

A = Availability (percent of time that the system, subsystem, or component can operate)

MTBF = Mean time between failure (reliability)

MTTR = Mean time to repair (a measure of the capability of the unit to operate)

For incinerator operations, this definition can be simplified to:

$$A = \frac{\text{Time processing feed}}{\text{Total time}} \times 100 \text{ percent}$$

Reliability studies require rigorous mathematical approaches, their accuracy increases with the size of the data base, and they are most effective when the units under evaluation operate continuously. Because there is a general paucity of radioactive and mixed waste incinerator data, and the limited existing data are from noncontinuous operations, it is not possible to define availability for radioactive and mixed waste incineration. For comparison purposes, it should be noted that the typical range for incinerators processing hazardous waste is 40-80 percent availability.

Materials of construction are a significant reliability concern. Combustors as well as the APC system can be adversely affected by improper materials selection. Rotary kilns, for example, must be designed and constructed so that the refractory lining and the kiln chamber are formed of materials having similar thermal coefficients of expansion; otherwise, buckling will occur. Another material failure directly related to reliability is the emission of volatile corrosive gases from the incinerator system.

Slagging is another reliability factor. This is essentially the buildup of melted noncombustible materials in the incinerator system that occurs when unsorted materials such as glass, certain metals, and certain polymeric materials enter the feed stream.

Because radioactive and mixed waste incinerators usually operate in a batch mode, reliability is hampered by the startup, standby, and shutdown periods of operation. Longer operation periods could increase reliability. Although not an actual failure mode, increased steady state operation decreases the starting and stopping stress on components.

HEPA filter failure, primarily from moisture accumulation on the filter material and particulate buildup, is another mechanical failure mode. Heating the flue gas to vaporize the moisture will help this problem and increase reliability. The configuration of the unit is an obvious contributor to reliability; e.g., parallel HEPA filters have a higher reliability than series HEPA filters. The interrelationship between operating procedure and equipment causes reliability predictions based on a limited number of operating systems to be particularly difficult.

Chapter 2 References

Cooley, Leland R. Incineration in Low-Level Radioactive Waste Management at the University of Maryland at Baltimore. December 1987.

Martin, Lorenzo M. Notes on Incineration of Radioactive Waste. Consejo de Seguridad Nuclear. Extract from Energia Nuclear, Spain 28 (148). March-April 1984.

Hultgren, Ake. Practices and Developments in the Management of Low and Intermediate Level Radioactive Waste in Sweden. Studsvik Energiteknik AB, NW83/502. June 1983.

The Los Alamos Controlled Air Incinerator for Radioactive Waste Volume I: Rationale, Process, Equipment, Performance, and Recommendations (Abstract only).
Volume II: Engineering Design Reference Manual (Abstract only)
Volume III: Modifications for Processing Hazardous Chemicals and Mixed Wastes,LA-9427, Vol. 111. DOE/HWP-30. October 1987.

Ziegler, Donald L. and Johnson, Andrew J. Disposal of HEPA Filters by Fluidized Bed Incineration. 15th DOE Nuclear Air Cleaning Conference, Boston. 1978.

Radioactive Waste Technology. New York, NY. American Society of Mechanical Engineers. 1986.

HEPA Filters and Filter Testing. 3rd Edition, Bulletin No. 581D. Flanders Filters, North Carolina. 1984.

The Flanders In-Place DOP Test. Bulletin No. 381C. Flanders Filters, North Carolina. 1984.

Flanders Nuclear Grade HEPA Filters. Bulletin No. 812E. Type B Filter. Flanders Filters, North Carolina. 1988.

Marshall, M. and Stevens, D.C. A Comparative Study of In-situ Filter Test Methods. In Proceedings of the 16th DOE Nuclear Air Cleaning Conference held in San Diego, California. October 1980.

Treatment of Off-Gas from Radioactive Waste Incinerators. Technical Report Series No. 302. International Atomic Energy Agency, Vienna. 1989.

Iroju, M. and Bucci, J. Savannah River Plant LLW Incinerator: Operational Results and Technical Development. Presented at the Incineration of Low-level Radioactive and Mixed Waste Meeting, St. Charles, Illinois. April 1987.

Bergman, W. Review of Some Health and Safety Aspects of the Incinerator Planned for the LLNL Decontamination and Waste Treatment Facility (DWTF). Lawrence Livermore National Laboratory. December 1988.

Bergman-1990a, High Efficiency Steel Filters for Nuclear Air Cleaning, 21st DOE/NRC Nuclear Air Cleaning Conference, Werner Bergman, 1990.

Bergman-1990b, High Efficiency Particulate Air (HEPA) Filters in the Nuclear Industry; Comments on Previous Reviews, Lawrence Livermore National Laboratory, Werner Bergman, et al., July 19, 1990.

Ruedinger-1988, The Realization of Commercial High Strength HEPA Filters, 20th DOE/NRC Nuclear Air Cleaning Conference, V. Ruedinger, et al., August 1988.

Ruedinger-1986, Development of Glass-Fiber HEPA Filters of High Structural Strength on the Basis of the Establishment of Failure Mechanisms, 19th DOE/NRC Nuclear Air Cleaning Conference, V. Ruedinger, et al., August 1986.

High Efficiency Gas Adsorbers (HEGA). Charcoal Service Corporation. Bulletin No. 283A, Bath, North Carolina.

Los Alamos Incinerator Documents:

Treatment Development Facility, Controlled-Air Incinerator, Runlog. Feed Summary for the Los Alamos Controlled-Air Incinerator System (1978-1987).
Radioactive Operations in the Los Alamos Controlled-Air Incinerator. Appendix D: Radiation Protection and Plant Instrumentation (From FSAR). Appendix E: Airborne Radioactive Emissions History (1981-1987).

Air Quality Permit Application for the Proposed Low Level Waste/Mixed Waste Incinerator, Technical Area 50, Building 37, February 1988.

A review of the report, "High Efficiency Particulate Arrestors in the Nuclear Industry," by Joseph Goldfield, Consulting Engineer, Reviewer: Ronald C. Scripsick, Industrial Hygiene Group, LANL, August 17, 1989.

Rocky Flats Incinerator Correspondence and Documents:

Draft Waste Analysis Plan, September 18, 1987.

Regulation Permit Activities for the Rocky Flats Mixed Waste Fluid Bed Incinerator Unit, April 22, 1987.

3. Technologies for Monitoring Incineration and Radionuclide Airborne Emissions

The incineration of low-level radioactive and mixed wastes results in the release of airborne emissions. Emissions include chemical compounds, gases, vapors, and aerosols in the form of fumes and particulates. Depending on the radiological, chemical, and physical properties of the incinerated waste, emissions may consist of a wide spectrum of radioactive aerosols (AMB86, C0081, INC89, OPP87). Airborne release rates also depend on the combustion process and the type of off-gas treatment system installed on the incinerator (INC89). The types of treatment technologies most frequently used include high efficiency particulate air (HEPA) filters and carbon adsorbers (IAE89). Such treatment technologies have proven effective in most routine applications but are ineffective for some radionuclides, primarily tritium, carbon-14, and iodines. Tritium is exhausted as water vapors, carbon-14 as carbon dioxide, and iodines are combined with other organic constituents present in off-gases. For these radionuclides there are no reliable engineered systems with which to control such emissions. Since airborne radioactive emissions are regulated by State and Federal agencies, it is necessary to (1) demonstrate that the incinerator is not releasing radioactive materials in excess of maximum permissible concentrations (MPCs) and (2) conduct periodic radiological assessments for characterization of offsite exposures and for historical and record keeping requirements (AMB86). These requirements are met by sampling and monitoring stack releases for radioactivity and release rates.

3.1 RADIONUCLIDE AIRBORNE EMISSIONS MONITORING TECHNOLOGY

Conceptually, the methods for sampling and monitoring radioactive emissions are similar to those used for sampling nonradioactive emissions. In fact, some methods identified by the Environmental Protection Agency to demonstrate compliance with the Clean Air Act (EPA89) are useable with little or no modification. In simple terms, a sample is withdrawn from the exhaust stack at a specified rate, conditioned to minimize sample losses, and collected in a manner which accounts for the physical properties and chemical forms of the radionuclide(s) of

interest. The sampling system, known as a sampling train, includes the sampling probe, sample collection or monitoring device, a flowrate meter, a sampling pump, and the associated electronic controls and display monitors. The sampling system can be fully automated, manually controlled, or a combination of the two methods. Depending on monitoring requirements, stack releases can be monitored in real time or by indirect methods. For example, stack samples can be collected automatically, removed manually from the sampling train, and analyzed at a later time. Sample analyses can be performed in real time by continuously operating radiation monitoring systems, or at a later time in a laboratory. Real-time stack monitoring obviously offers the advantage of being able to detect current trends in stack emissions and to terminate immediately the incineration burn if a pre-specified concentration limit is exceeded. This approach also has the advantage of detecting rapidly changing conditions and monitoring system parameters that, if unchecked, could result in an unsafe operating status. In this mode, the stack radiation monitoring train doubles as a process control system.

3.1.1 Stack Off-Gas Samolinq Systems

The stack off-gas sampling system generally consists of several components operating as a unit. The main purpose of the sampling system is to collect a representative sample of the effluent stream. The EPA regulations, as well as proper practice, require that the sample be withdrawn isokinetically; i.e., the velocity of the sample gas at the inlet of the sampling nozzle must be equal to the velocity of the off-gas effluent in the stack (EPA89, ACG78). Failure to meet this requirement would result in an inaccurate representation of particle size distribution (ACG78). This requirement is not as critical for gaseous emissions, but since gases and particulates are always released simultaneously, it is normal practice to sample isokinetically for both using a single probe. Depending on the type of incinerator, the system can be operated in an automatic or a manual mode. Depending on its complexity, the system requires such utilities as electrical power to run pumps, valves, heat tracing elements for sample conditioning, and to power system interlocks and local and remote alarms; compressed air or bottled nitrogen tanks to purge sampling lines; and water to cool system components (NRC86, SAI85, SOR89, BUN89, AER84, TER88, and VIC__).

Three basic types of sampling trains and components are commonly used. A typical radionuclide sampling and analysis system is shown in Figure 3-1. This system can neither detect nor measure some radionuclides; e.g., tritium and carbon-14. Impingers or silica gel towers, as indirect methods, are used for this purpose since they have been shown to effectively retain water vapors and can be made to trap carbon dioxide. Some radiation monitoring systems respond to other forms of radiation for which they were not originally designed or calibrated. In such events, the detector(s) will detect radiation being emitted by the sample, but it will not be possible to reliably measure or quantify the amount of radioactivity actually present. This type of response, if not properly accounted for during calibration, may result in over or under estimating actual off-gas releases.

The system shown in Figure 3-1 incorporates a sequence of three radiation detectors. The first detects and measures radioactive emissions in particulate forms using paper or glass fiber filters. The second detects and measures radioiodines using activated carbon cartridges to capture both elemental and organic iodines. Such cartridges are impregnated with potassium iodide (KI) or triethylenediamine (TEDA) in order to increase the collection efficiency of organic compounds (ACG78). The third detector measures radioactive gases by presenting a gas volume to the detector.

A conceptual diagram showing an example stack monitoring system is shown in Figure 3-2. This system uses a CaF(Eu) detector capable of operating at the stack gas temperature. By measuring particulates collected at the stack gas temperature, the adverse effects of particulate plate-out and deposition/resuspension are eliminated (SEG_). In all stack monitoring systems, some effluent components, particularly iodines, will plate-out onto sampling line surfaces. After plating-out or depositing onto surfaces, iodines will later resuspend, remain suspended for a time, deposit again, and the process repeats. Because of this phenomena, iodine concentrations measured by the detector do not represent the true concentractions present in the stack. Variables that control plate-out are sampling line construction material, diameter, length, and bends; air flow rate; humidity; change in temperature; and temperature. Temperature is the major controlling variable. The solution to plate-out is to place the detector on the stack or heat-

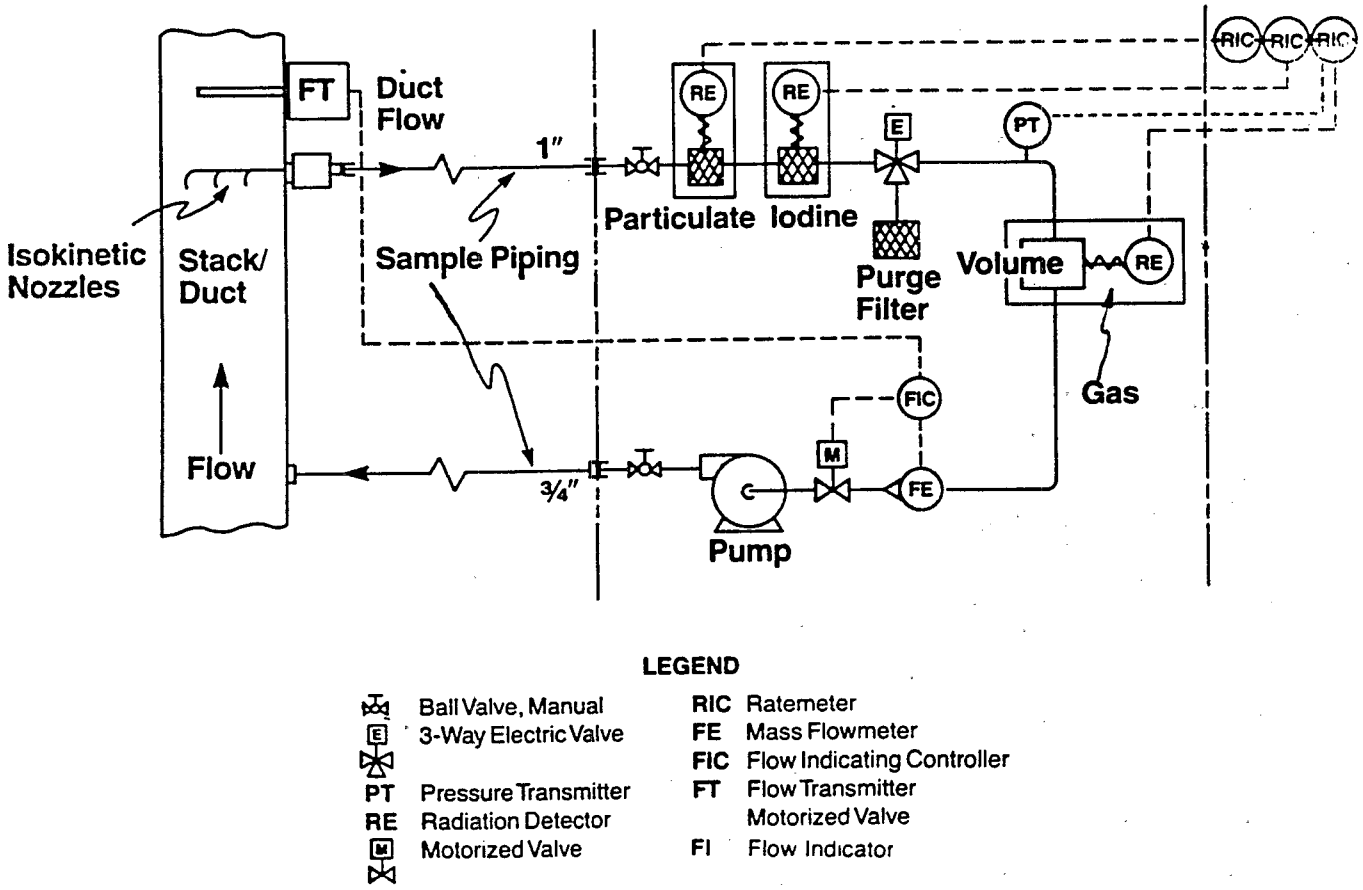

Figure 3-1. Typical Radioactive Airborne Emission Sampling System

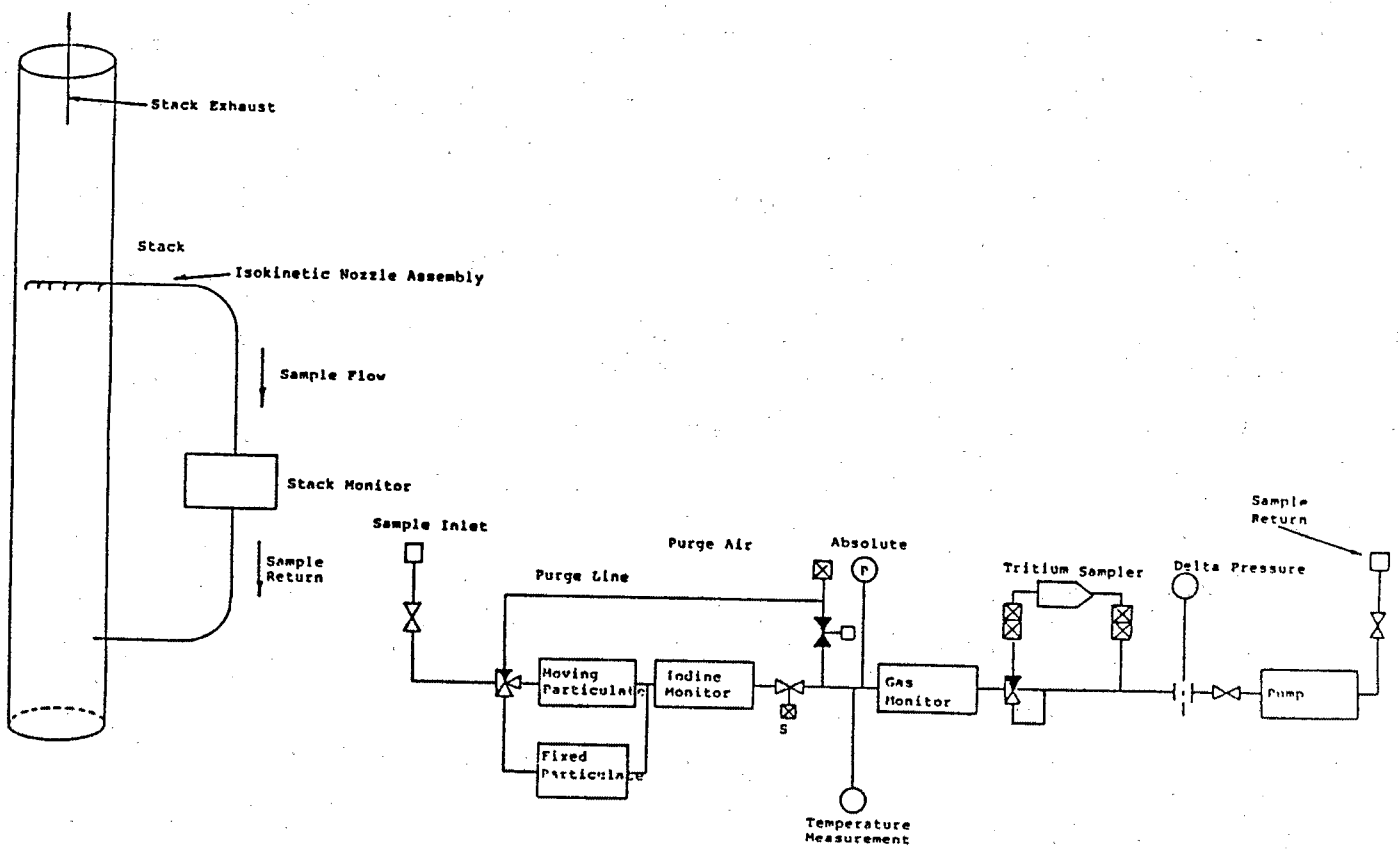

Figure 3-2. Conceptual Diagram Showing the Stack Monitor Location and Sampling Layout

trace the entire length of the sampling line from the stack to the detector.

Figure 3-3 depicts an EPA-approved sampling system and method for the collection of particulates. The method relies primarily on the collection of particulates on a filter followed by a series of impingers. The sample is conditioned to minimize internal losses and maximize absorption. The particulate filter holder is heated to prevent condensation and the impingers are cooled in ice baths to enhance absorption. Obviously, the number of impingers can be increased, and the composition and sequence of each scrubbing solution can be changed to trap specific chemical species. Other than sampling parameters such as flow rate, temperature, and differential pressure, this method does not provide any real-time indication of offgas release rates or concentrations. The filter and impinger solutions are analyzed in a laboratory.

The third method, shown in Figure 3-4, is used to assess the presence and concentrations of volatile organic compounds. This method relies on the collection of organic vapors on tenax, charcoal, and silica traps. However, it does not provide any real-time indication of releases as they occur. The traps, including the silica gel, are analyzed by laboratory methods.

The physical configurations of the systems discussed above are designed to facilitate the operation of the system, sample changes, and maintenance and servicing. They are typically configured to reflect specific facility design and operational requirements. The purpose and operational features of each of the major components are discussed below.

3.1.1.1 Sampling Point Location. The sampling probe is installed in the stack at a location downstream from any major air disturbances such as elbows, transition pieces, and branch entries. The normal requirement is to locate the sampling point at a distance equivalent to at least eight stack diameters downstream from the nearest air disturbance and more than two stack diameters upstream from any other similar air disturbances (ACG84).

This location can also be determined empirically by taking measurements until the observed flow rates are within 10 percent of one another at two separate locations (ACG84). The flow rate

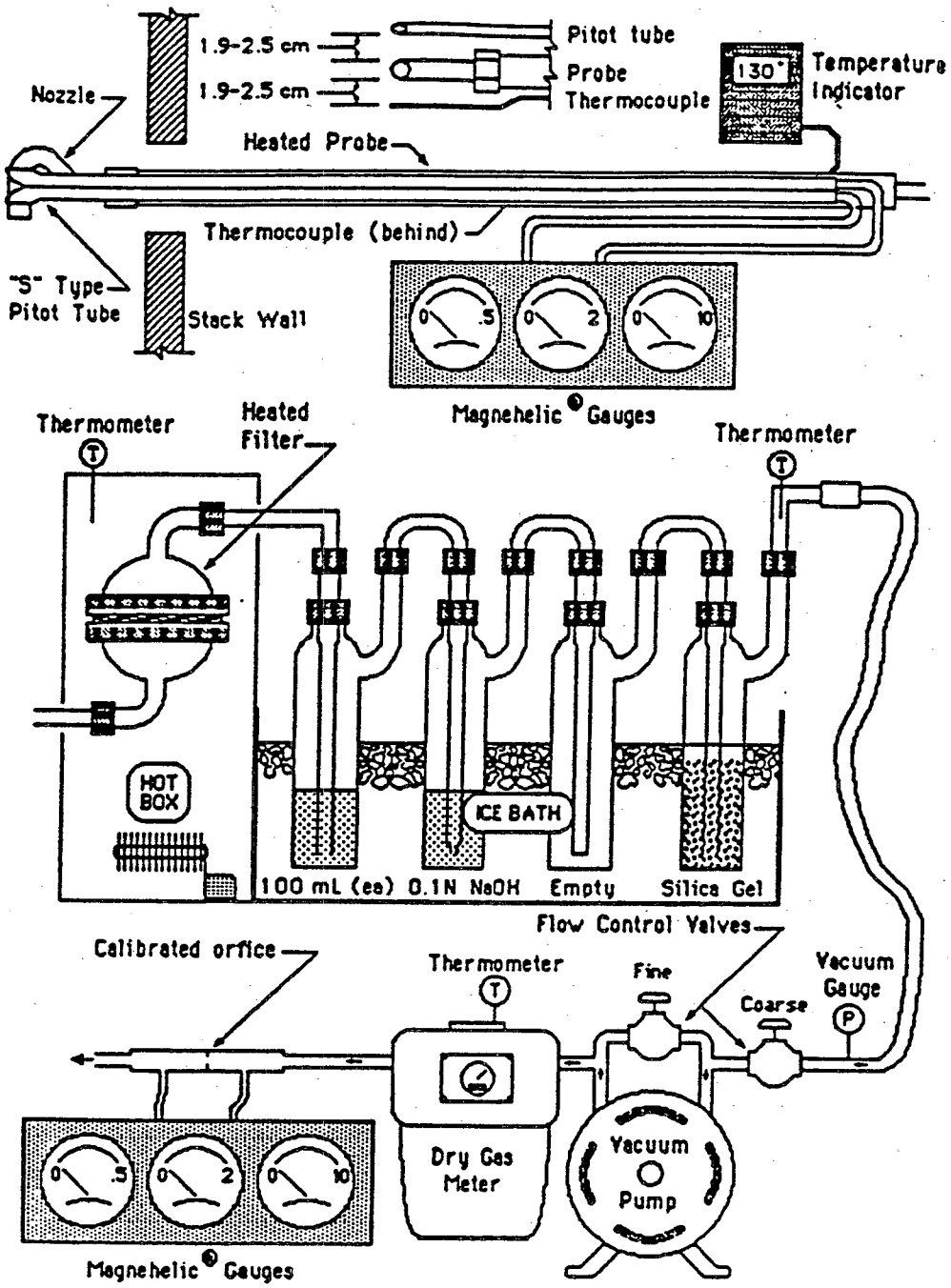

Figure 3-3. Typical EPA Particulate Airborne Emission Sampling Sytem

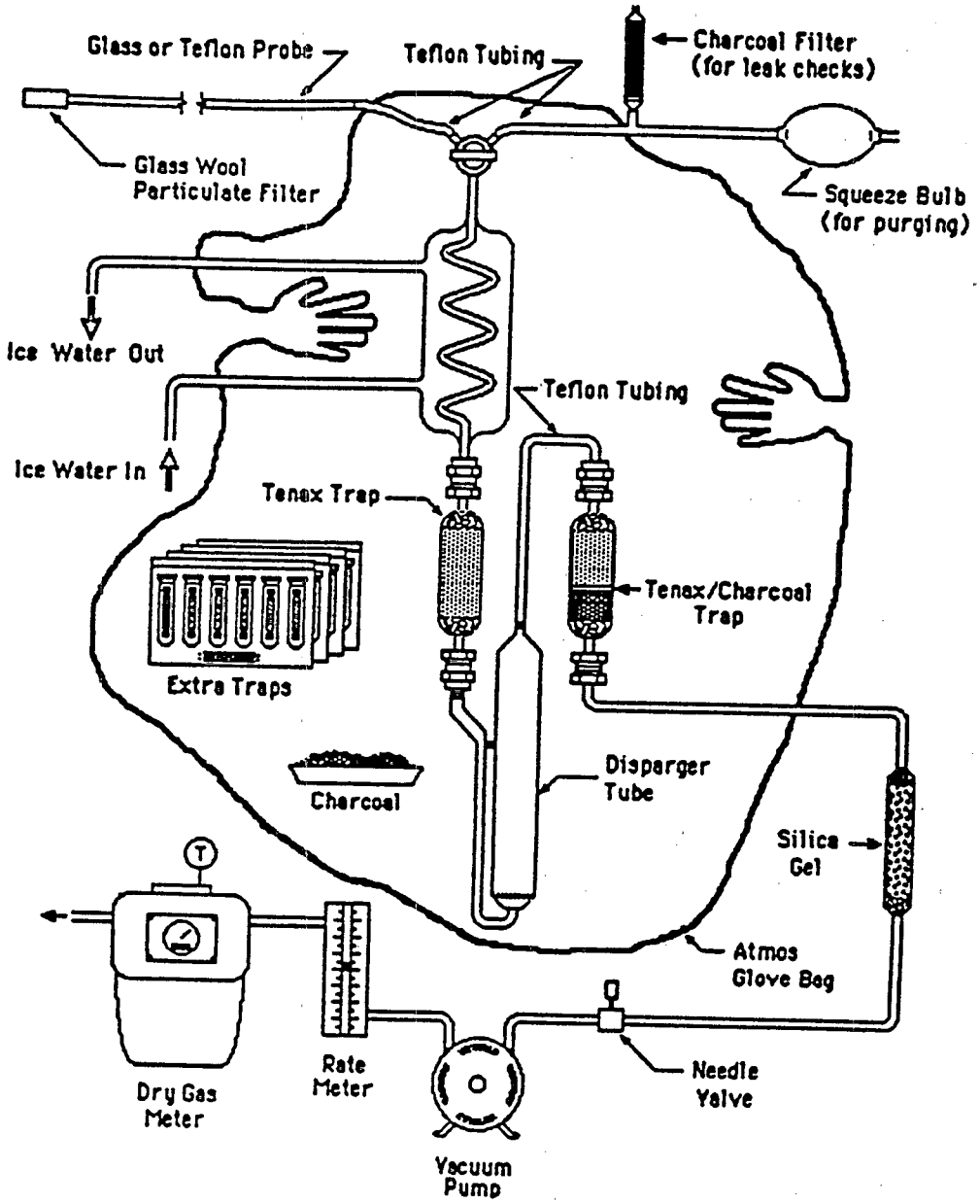

Figure 3-4. Typical EPA Volatile Organic Sampling System

across the diameter of the stack is measured by taking two sets of measurements at 90 degrees from one another. The number of measurements across each traverse is dictated by the shape and size of the stack pipe. For round ducts with diameters larger than 6 inches, at least 10 traverse points should be used for proper assessment of the cross-sectional flow-rate profile. For square and rectangular stacks, the procedure involves dividing the cross section into equal square or rectangular areas and taking measurements in the center of each. Enough measurement points should be identified such that the distance between any two points is not more than six inches. The total number of readings should be at least 16 (ACG84).

3.1.1.2 Sampling Probe Assembly. The sampling probe assembly typically consists of one or more nozzles facing the out-going offgas flow (see Figure 3-5). The shape and size of the sampling probe and nozzle are designed to minimize air-flow disturbances and collect particulate and gas or vapor samples with the least loss. The probe is typically shaped such that little or no internal deposition occurs for particulates (ACG78, ACG84, ANS69, KUR__). The sampling probe should make a smooth turn with a radius wide enough to minimize sample deposition. If reactive gases and vapors are sampled, some internal plating may occur. In this case, the probe material should be selected so as to minimize this undesirable effect (ACG78, AMB86). Depending on the design, the sampling probe assembly may also incorporate flow rate or velocity sensors. Stack flow rate or exhaust velocity is measured by a pitot tube or electronic anemometers (ACG78, KUR__). These measurements are used to control electronically the sampling flow rate by regulating the sampling pump or flow control valve. This information is also used to correct sampling flow rates to conditions of normal temperature and pressure (25 degrees C and 760 mm of Hg) (ACG78).

3.1.1.3 Sampling Flow Rate. The sampling flow rate is dictated by several factors, including offgas exhaust flow rate, type of sample collection device, instrument response, and desired minimum detectable airborne concentrations (NRC86, BUN89, BAT83). Generally, these factors are considered as operating specifications and are incorporated in the general design of the sampling system. For example, a system with a higher flow rate is not necessarily better

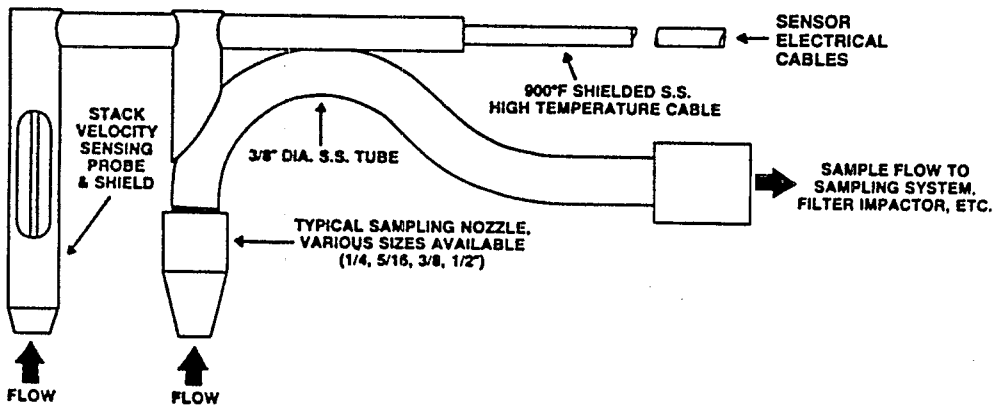

Figure 3-5. Typical Isokinetic Sampling Probe

since it may sample under anisokinetic conditions, result in lower sample collection efficiency, cause increased filter loading, or deplete trap or impinger solvent.

3.1.1.4 Sample Collection. The sample is extracted from the offgas exhaust stream and directed to a collection device. Depending on the physical and chemical properties of the sample, different types of collection devices may be used. For particulates, the sample is collected on glass-fiber filters, impingers, cascade impactors, or bubblers. If bubblers are used, scrubber solutions are selected to account for the chemical properties of the sample and to enhance absorption and retention (AMB86, BUN89, OPP87). For gases or vapors, the samples are usually collected using impingers with appropriate solutions. Some gases and vapors may also be collected on activated carbon cartridges or silica gels.

In some instances, the sample may be directed to a direct reading detector which provides an instantaneous reading. These instruments may consist of beta or alpha scintillation detectors or gamma or X-ray spectroscopy systems (ACG78, VIC_. SOR89, SAI85). The detection capability of such systems depends on several factors, including the type of radiation detector, sample flow rate, ambient background radiation levels, presence of two or more radionuclides, and the selected radionuclides of interest on which the calibration is based. See Section 3.1.4 for more details on this subject. The sample can be collected on stationary particulate glass fiber filters, moving filter tapes, activated charcoal cartridges, or presented as a gas volume to a radiation detector.

Most sampling systems, because of the harsh operating conditions, are equipped with purge lines to flush out residual gases or particulates between sampling batches. The sampling lines are flushed with compressed air or bottled nitrogen. The length of the sampling line should be as short as possible and have a minimum number of bends or turns to minimize internal deposition (ACG78, ANS69).

Depending on sampling conditions, samples may have to be collected in a controlled environment. For example, the sample offgas stream may have to be maintained at an elevated

temperature to minimize water condensation and losses via internal plating (AMB86, OPP87, ANS69). Experience has shown that when a sampling train is properly designed, little or no radioactivity should pass through the filters or impingers. The following summarizes some test results conducted on the TSCA incinerator system located at the Oak Ridge National Laboratory (BUN89).

	Proportion Collected (percent)		
Form of Activity	Filter & Probe	Condensate	Impingers
Uranium	100	ND*	ND
Alpha	99.25	0.68	0.07
Beta	99.30	0.40	0.30
Technetium	99.70	0.28	0.02

*ND means not detectable.

These data indicate that over 99 percent of the activity is retained on the filter and probe. These values do not represent radiation monitoring system detection efficiencies, but rather the amount of radioactivity retained in or on various components. Typically, less than 1 percent passes through the filter and is collected either as condensate or in the impingers. Temperature conditions are maintained with electric strip heaters and thermally insulated boxes which house the sample collection devices. The presence of excess water vapor may cause particulate filters to saturate and rupture as the differential pressure across the filter increases. If samples are sent to impingers, the sequence of the scrubbers may also be important in isolating particulates (BUN89). For example, the first two impingers could contain nitric acid to collect uranium, while the next series of impingers could contain sodium hydroxide to collect elemental iodines or other particulates. The next impinger could contain impregnated charcoal to trap methyl

iodines or other organic iodine compounds and any remaining elemental iodines. The final impinger could contain silica gel to collect any remaining moisture. In this example, samples from each impinger would be analyzed for the presence and concentration of each radioactive species. Obviously, this method does not provide the capability to measure airborne radionuclide emissions in real time.

Typically, the analysis would be performed on a batch basis following each burn or conducted periodically; e.g., daily. Sample collection and analytical frequency would have to reflect the chemical stability of the samples, radioactive half-lives, regulatory requirements, and established minimum detectable concentration limits.

3.1.1.5 Sampling Pump. The sampling pump provides the driving force to draw the sample from the stack and through the various collection devices (ACG78). The type of pump most often used is a constant flow-rate pump which adjusts automatically to changing sampling conditions; e.g., increases in filter loading. Since isokinetic sampling conditions must be maintained, the sampling flow rate can be adjusted by controlling the pump flow rate or via a flow-control valve. The sample flow rate is also adjusted to account for differential pressures and moisture content of the sample stream. Such corrections can be made electronically or manually depending on the sophistication of the sampling system. These functions are typically monitored and controlled by flow rate, mass, or velocity sensors and controllers (ACG78, KUR__). Finally, the pump's exhaust is returned to the stack, at a point downstream from the sampling point. The pump's flow rate must be regularly verified and calibrated to ensure that operating characteristics have not degraded beyond the useful performance range (ACG78).

Experience has shown that sampling systems are also prone to frequent failure and require extensive maintenance (IRU__). The accumulation and condensation of corrosive vapors or gases in sampling lines and components cause rust and corrosion damage. Typically, particulate residues accumulate in sampling lines, valves, and components and eventually such systems become plugged and no longer meet original performance specifications. Accordingly, sampling system designs should consider the use of inert materials, system components that can be quickly

changed and easily cleaned, and selection of parts and equipment known for their durability and reliability.

3.1.2 Real-Time Radiation Monitoring Systems

Very complex systems are required to monitor in real time the very low radionuclide concentrations that may be discharged from incinerator stacks. Real time monitoring requires alpha, beta, and gamma analysis of particulates and gaseous species with widely different collection characteristics. While several different real time, or near real time, systems have been installed, for example, beta/gamma systems on nuclear power plant exhaust stacks, none have been installed on incinerator stacks.

Sampling systems that incorporate a real-time radiation monitoring system rely on passing or collecting the sample next to a radiation detector (ACG78). For alpha emitters, the monitoring system may be equipped with silver activated zinc sulfide. For beta emitters, the detector may use a plastic scintillator. For gamma or x-ray emitters, the detection system may rely on a sodium iodide or germanium detector (NCR78).

Some monitoring systems use hybrid designs combining different detection methods. For example, one method combines alpha and beta scintillation media as one unit. This method relies on the different attenuation and response properties of beta plastic and alpha ZnS(Ag) scintillators. Another approach involves placing two separate detectors to measure the radioactivity collected by a single-filter. For example, one detector could measure total beta activity while the other could detect total gamma activity or operate as a single channel analyzer targeting one radionuclide; e.g., iodine-125, iodine131, or cesium-137.

More sophisticated systems may rely on analytical spectroscopy by using a surface barrier detector (Si) for alpha emissions and NaI(Tl) scintillation or solid state (HPGe, Si(Li)) detectors for gamma or x-ray emissions. The pulses that such detectors generate are amplified, shaped, collected, and displayed or stored as they are accumulated. In spectroscopy systems, the pulses

are sorted as a function of energy since such systems generate pulses proportional to the radiation particle that is detected. The information characterizing the size of the pulses is stored in energy bins or channels. These data are displayed to generate a spectrum that characterizes the radionuclides detected on the filter. Since each nuclide has a unique spectrum, this information can be used to identify each radionuclide and quantify its concentration.

The information thus collected is typically displayed in real-time as a count rate, in counts per minute (cpm) or second (cps), or directly converted to the proper radiological units, as a concentration (uCi/mL) or release rate (uCi/sec). These results can be expressed by individual radionuclide or in terms of total activity for a given distribution of nuclides. Typically, the most sophisticated systems rely on algorithms which reduce the spectra to the respective radionuclides and calculate release rates and concentrations given the stack exhaust flow rates (SOR89, SAI85, VIC__). Given that waste is incinerated in intermittent batches, airborne radionuclide emissions represent average concentrations or release rates, and a more appropriate radiological measure may be the rate of change in concentrations or release rates. This information is typically expressed as cpm per second or uCi/s per second (cpm = counts per minute and uCi/s = micro curies per second). These sophisticated systems also have the capability to display this information as a function of time showing trends and variations in concentrations or release rates. Selection of the proper radiological unit for expressing airborne radionuclide emissions depends on the type of monitoring system installed, its degree of sophistication, reporting requirements, State or Federal regulations, and license conditions imposed on the facility.

Finally, real-time radiation monitoring systems must be periodically calibrated against known radioactive standards (ACG78, NCR78). The operating characteristics and response of such instrumentation must be known over a wide range of radiation emission energies and anticipated radioactive concentrations. As discussed in Section 3.1.4, the detection limits associated with such instrumentation vary significantly. Generally, detection limits are system specific and are not constant. Detection limits are derived as part of the calibration procedures and take into account an anticipated mix of radionuclides, sampling flow rates, and the response characteristics of the radiation detectors or analytical methods.

3.1.3 Indirect Radiation Monitoring Methods

Stack samples need not always be monitored in a real-time mode. In fact many institutional incinerators rely on manual monitoring methods which are implemented for individual burns (C0081, EGG82, LAN83, WM85). Samples are collected using a simple pump and sample collection device or elaborate systems as described above. Once collected, the sample is processed and analyzed in a laboratory. Radioanalytical procedures may employ a wide range of methods, including gross alpha and beta counting, gamma, x-ray, or alpha spectroscopy, and liquid scintillation counting (ACG78, NCR78). The selected analytical methods must be implemented in accordance with good laboratory practices and comply with established standards. There are well-documented procedures for analyzing stack samples (DOE83, EPA84, NCR78, EPA89). The selection of a measurement method, given a specific application, is based on such considerations as sample physical and chemical forms, anticipated range of sample radioactivity, radionuclide(s) of interest, analytical frequency, specified or desired lower limit of detection, availability of time and resources, and costs. In general, radiochemical analyses are similar to classic wet chemistry procedures, except that the mass of the radionuclide(s) is usually so small that conventional volumetric or gravimetric methods are not capable of separating the radioactivity. The procedure, instead, relies on measuring the amount of radioactivity which is emitted by the sample.

The radionuclide of interest, in its elemental form, may be separated from the sample matrix by chemical extraction, precipitation, ion-exchange, electrolysis, distillation, and chromatography. In other instances, it may simply be necessary to reduce the sample volume or mass by evaporation, wet ashing (using, for example, nitric acid), dry ashing at low or high temperature, or acid fluxes in order to prepare a sample for analysis. In any case, the selection of a specific method must ensure that losses are minimized and quantifiable. It is common practice to introduce a tracer element (stable or radioactive) to determine sample chemical recovery or yield.

Regardless of the method chosen, some common factors must be considered. The major factors are:

a. Sample - Samples are analyzed using a procedure that stipulates sample size, volume, and counting geometry or configuration. When analyzing alpha, beta, and x-ray emitters, corrections must be made for sample self-absorption. Depending on the mass and matrix of the sample, some of the radioactivity originating from the center of the sample will not escape and, consequently, will not be detected and measured. Such corrections are made empirically, or by using a sample with a mass which results in little or no self-absorption. Usually, the sample mass is characterized as density thickness, expressed in units of milligrams per square centimeter (mg/cm^2). The density thickness is used to correct for self-absorption for a given type of particle emission and its energy.

b. Sample Handling - All samples must be handled with care to prevent any accidental loss of sample material or cross-contamination of the counting equipment and laboratory work areas. Cross-contamination may cause erroneous conclusions. If a sample were actually free of any radioactivity, any cross-contamination (e.g., from another sample) would lead to the conclusion that the sample did contain some radioactivity. Preventing sample losses during handling is also important because any loss would result in underestimating the actual levels of radioactivity. Accordingly, all samples must be properly prepared for analysis.

Samples are typically contained in or on planchets, kept in solution in colloidal or dissolved forms, electro- or flame-deposited on metal discs, or fixed on filter paper.

c. Instrumentation - Instrumentation must be selected to ensure that the radiation detection principle applied will indeed detect and measure the radionuclide(s) of interest. The operational features of the instrument must be well known, considering system background count-rate, sample size or volume, calibration, counting gas, counting efficiency, counting time, counting geometry, decay correction factors, and lower limit

of detection. Given that the system has been calibrated, it is also necessary to verify system settings, such as high voltage, energy gain, upper and lower level discriminator, dead-time, counting gas flow rate, background and standard count-rates, and operational stability.

3.1.4 Instrumentation Detection Limits

The use of a continuous stack sampling and monitoring system requires that the response characteristics and detection limits be known. Table 3-1 summarizes the responses of several commercial systems. It should be noted that these systems were not designed for use on incinerators, and none have been installed on incinerators. The response characteristics of the system are keyed, by calibration, to a specific radionuclide(s) which is used to determine release rates and concentrations. Other radionuclides that are not detected by the monitoring system or are beyond the range of sensitivity are inferred by scaling factors. The scaling factor is sometimes established beforehand based on radioanalysis of the waste before incineration. Another method used to derive the scaling factor relies on the known radiological characteristics of the process stream from which the waste originates. This approach works best for waste streams which are homogeneous with well-characterized radionuclide distributions and concentrations. This method is particularly well-suited to liquid waste streams; e.g., contaminated oils, machining fluids, and liquid scintillation fluids.

For some radionuclides, as noted earlier, it is not possible to rely on continuous monitoring. This is the case for tritium and C-14, for example, since there is no known reliable method to measure either in real-time. The problem is compounded by the difficulty in determining the presence and concentrations of tritium or carbon-14 in some specific waste streams. This is particularly true for solid and bulk waste material but not for liquid wastes.

Depending on the sophistication of the continuous monitoring system, there is a need to determine, a priori, the minimum detectable concentrations (MDC) that the monitor will reliably measure. The concept of the MDC, also referred to as the lower limit of detection (LLD),

Table 3-1. Summary of Stack Monitoring System Response(a)

Vendor	Model or System	Type(b) of Detector	Sensitivity(c) Value	Nuclide	Notes(d)
Sorrento:	RD-56B	B-Scint.	10-12	Part.	@ 3 SCFM
	RD-59	NaI(Tl)	10-12	1-131	" "
	Dual Channel	B-Scint.	10-11	Sr-90	" "
	Dual Channel	A-Scint.	10-11	Am-241	" "
Ludlum:	Beta Air Monitor 333-2	GM Tube	10-11	Sr-90	@ 2 SCFM
	Iodine Air Monitor 377	NaI(Tl)	10-11	I-131	" "
Victoreen:	Gaseous Effl. Monitor 940-1	NaI(Tl)	10-12	I-131	@ 4 SCFM
		B-Scint.	10-9	Cs-137	" "
		" "	"	I-131	" "
		" "	"	I-133	" "
EG&G-Ortec Berthold:	LB-150D	Gas Prop.	10-13	Gross B-/Alpha	@ 3 SCFM
	LB-151-1	B-Scint.	10-11	Gross B-	" "
	LB-II0	Gas Prop.	10-9	H-3/C-14	" "
	LB-II0-A	Ion Cham.	10-5	H-3	" "
Eberline:	AMS-3	GM Tube	10-12	Tc-99	@ 2 SCFM
	Alpha-VIA	Surface Barrier	10-12	Pu-239	" "

(a) Data collected from vendors by telephone or technical brochure summaries.
(b) Detector systems: HPGeLi, high purity germanium-lithium semiconductor; B-Scint., beta particle plastic scintillator; A-Scint., alpha particle plastic or silver activated zincsulfide scintillator; NaI(Tl), thallium-doped sodium iodide scintillator; GM Tube, Geiger-Mueller detector tube; Gas Prop., flow-through gas proportional detector; Ion Cham., flow-through ionization chamber; Surface Barrier, diffused-junction solid state surface barrier detector.
(c) Expressed in uCi/mL, e.g., 10-13 equals 1.0 x 10-13 uCi/mL.
(d) Nominal or typical values, actual flow rates may vary.

Table 3-1. Summary of Stack Monitoring System Response(a), Cont'd

Vendor	Model or System	Type(b) of Detector	Sensitivity(c) Value	Nuclide	Notes(d)
SAIC	Stack Isotopic Monitoring Syst.	HPGeLi	10-13	Part.	@ 2 SCFM
		"	10-10	Mn-54	" "
		"	10-9	Cr-51	" "
		"	10-10	Co-58	" "
		"	10-10	Fe-59	" "
		"	10-11	Co-60	" "
		"	10-10	Sr-91	" "
		"	10-9	Sr-92	" "
		"	10-10	Mo-99	" "
		"	10-8	Tc-99m	" "
		"	10-13	I-131	" "
		"	10-10	I-132	" "
		"	10-10	I-133	" "
		"	10-9	I-134	" "
		"	10-10	I-135	" "
		"	10-11	Cs-134	" "
		"	10-11	Cs-137	" "
		"	10-10	Cs-138	" "
		"	10-10	Ba-140	" "
		"	10-10	Ce-141	" "

(a) Data collected from vendors by telephone or technical brochure summaries.
(b) Detector systems: HPGeLi, high purity germanium-lithium semiconductor; B-Scint., beta particle plastic scintillator; A-Scint., alpha particle plastic or silver activated zincsulfide scintillator; NaI(Tl), thallium-doped sodium iodide scintillator; GM Tube, Geiger-Mueller detector tube; Gas Prop., flow-through gas proportional detector; Ion Cham., flow-through ionization chamber; Surface Barrier, diffused-junction solid state surface barrier detector.
(c) Expressed in uCi/mL, e.g., 10-13 equals 1.0 x 10-13 uCi/mL.
(d) Nominal or typical values, actual flow rates may vary.

addresses a procedure for determining the smallest amount of sample activity that will yield a net count rate for which there is confidence, at a predetermined level, that the activity is due to the sample rather than background (NCR78, DOE83, TS083).

Counting a radioactive sample or background will yield a series of measurements (which should be distributed as a Poisson distribution) from which it is possible to establish the standard deviation from a single measurement. The standard deviation can then be manipulated in the same way as the Gaussian standard deviation to establish a confidence interval about the mean. If a background count-rate and its associated standard deviation are established, this information can be used to derive a lower limit of detection. For example, a sample count one standard deviation above background would indicate the presence of activity in the sample 84 percent of the time and false positives 16 percent of the time. If two standard deviations were used instead, the presence of radioactivity would be detected 97.5 percent of the time, and 2.5 percent of the time one would note false positives. Since the sample and background count rates have their own distributions, the interaction of the two distributions becomes important as the sample activity tends to approach background levels. When the total sample count approaches background, the distributions overlap such that it becomes difficult to discern the difference in radioactivity due to the sample from that due to background. The count rate that establishes the lower limit of detection is defined by the overlapping region of both distribution curves.

Several factors can be controlled to enhance the detection limit for a specific measurement method. Since the goal is to detect and reliably measure low radioactivity levels in the sample, the detector must be located in an area of low background radioactivity (including both ambient external radiation exposure rates and airborne concentrations). Some types of detectors are very insensitive to external radiation and accordingly do not pose a problem in this regard. For continuous air sampling systems, especially those designed to measure alpha radioactivity, the problem is compounded by the presence of naturally occurring radioactivity; i.e., decay products from radon (radon-222) and thoron (radon-220) due to the uranium and thorium decay chains, respectively. Depending on the type of instrumentation and data/spectra reduction method used, such systems may resolve overlapping alpha spectra and reject the contribution due to radon-

thoron decay products. As will be discussed later, the presence of radon decay products can complicate the interpretation of results generated by stack monitoring systems.

Radon gas decays into particulate daughter products, which are retained on sampling filters. The decay products, being themselves radioactive, decay and cause an ingrowth in activity, eventually reaching an equilibrium with that of the first member of the decay chain. The concentrations of radon decay products are rarely at equilibrium with their parent gas. Typically, the decay products are separated and are present at a fraction of the equilibrium, about 30 to 80 percent (NCR75). The typical outdoor radon-222 concentration is about 200 pCi/m^3 and 5 pCi/m^3 for radon-220 (NCR87). Accordingly, decayproduct concentrations are always less than that of radon. The ambient concentrations of radon and its decay products are known to vary by a factor of 10, depending on atmospheric pressures, temperature, soil moisture, and temperature inversions. Typical diurnal variations cause radon concentrations to peak early in the morning and drop off sharply in the afternoon (NCR87).

If, for example, stack emissions include americium-241 or plutonium-239, the instrumentation must be able to discern the presence of radioactivity due to all radionuclides that decay by emitting alpha particles. If the system relies on gross alpha counting methods, the detector will not discern the different radionuclides. The results, expressed as total count rate, will represent the sum total of the radioactivity retained on the filter and seen by the detector.

If, however, the system relies on alpha spectroscopy, the detector will segregate alpha emissions and identify each radionuclide. Americium-241 decays by emitting 5.5 MeV alpha particles, plutonium-239 emits 5.1 MeV particles, and the radon decay products emit several particles ranging from 6.0 to 7.7 MeV (KOC81). (Only the major alpha emissions are cited here.) The count rate associated with the detection of each alpha particle is stored in its respective energy channel. Because of the random process of radioactive decay and interaction of alpha particles with the detector, the presence of a radionuclide is represented by a series of Gaussian distributions, one for each alpha particle. These emissions may result in overlapping spectra, depending on the system's resolution. The respective contribution of one spectrum into another

spectrum would have to be resolved either manually or via an algorithm. The system's energy response is typically divided into regions-of-interest, each one identifying the presence of a radionuclide. By using calibration methods, the response of one radionuclide in the region of interest of another radionuclide is determined empirically or is mathematically fitted based on a few measurements. These relationships are noted and used to develop a matrix and set of simultaneous equations to calculate the true count rate and radioactivity associated with each nuclide.

For illustration purposes, it is worthwhile to compare current maximum permissible concentrations (MPCs) for plutonium-239 and americium-241. The Nuclear Regulatory Commission's MPC for plutonium-239 is 1.0×10^{-12} uCi/mL and 4.0×10^{-12} uCi/mL for americium-241. Both MPCs are for insoluble forms based on 10 CFR 20, Appendix B, Table II, Col. 1 values for nonoccupational exposures. For the radon-222 and radon-220 concentrations noted above, the corresponding radon decay product concentrations are 1.0×10^{-10} and 2.5×10^{-12} uCi/mL, respectively, assuming 50 percent equilibrium. When compared to the MPCs, it can be seen that plutonium-239 and americium-241 concentrations fall within the range of radon decay products normally encountered in environmental settings.

For continuous stack monitor operation under such conditions, the system, starting with a new filter, will show a rapid rise in the count-rate, followed by a plateau which represents an equilibrium between two competing factors, 1) the accumulation of radon decay products on the filter media and 2) radioactive decay of radon progenies. Occasionally, the plateau would rise and fall, depending on changes in ambient radon concentrations, filter dust loading, and sampling flow rate. If the alarm trip points are set at some fraction of the MPC, which is usually the practice, the monitoring system would most likely generate spurious alarms coinciding with variations and increases in ambient radon decay product concentrations. The cause for these alarms would be investigated to determine whether or not the alarm is the result of spurious responses, due to some instrument malfunction, or real. The particulate filter would be removed and subjected to several laboratory analyses to identify the radionuclides. In order to confirm the presence of naturally occurring radioactivity, one of the steps would involve

counting the filter at specific time intervals to observe the radioactive decay of the radon progenies. Since americium-241 and plutonium-239 are both long-lived radionuclides, repeated analyses showing short-lived radon progenies would be indicative that the alarm was caused by naturally occurring radioactivity and not due to the operation of the incinerator.

Other factors may enhance the response characteristics of a stack sampling and monitoring system. Such factors include selecting a type of detector which offers energy optimal response, properly determined sampling flow rate, and short instrumentation response time. The sampling flow rate is governed by two considerations. First, the flow rate should be such that it ensures isokinetic sampling (discussed in greater detail above). Second, the flow rate should be sufficiently high to meet the desired MDC objectives, given an established sampling frequency. Ideally, longer sampling times provide lower MDCs.

The selection of the detector media and associated electronics (analog-todigital converter (ADC)) generally dictates the overall response characteristics of the system. For spectroscopy systems, the ADC dead-time will depend on the amount of activity presented to the detector. The dead-time refers to the time during which the instrument is busy converting and storing data in a digital form and is not acknowledging any additional pulses from the detector. For the intended uses, dead-times should typically be low (a few percent) and result in no significant data loss. These losses are compensated by operating the system with the clock set to "live-time" which automatically corrects for the dead-time.

Instrumentation can also be equipped with algorithms that automatically perform energy calibrations, reduce spectra and data, and provide the means to subtract or reject count-rates due to background radioactivity. These features generally facilitate interpretation of the data and results as well as system operation. The problem with "canned" software/firmware packages is that, as black boxes, they offer little understanding as to how the data are handled and reduced. Vendors treat this information as proprietary, providing little or no additional documentation other than that provided in the manuals. Consequently, it may be difficult or even impossible actually to determine how the raw data (from a count-rate, in cpm) is converted

to the proper radiological units (in uCi/mL or uCi/s). It is good radiological practice to generate, using first principles, data and results manually during the initial calibration procedures. The calibration test results and any associated calculations should be documented and maintained as permanent records.

3.2 RADIATION PROCESS MONITORING TECHNOLOGY DESCRIPTION, PRINCIPLE OF OPERATION, AND APPLICATIONS

Real-time radiation monitoring systems can be used to warn the operator that certain conditions are rapidly changing, to trip audiovisual alarms, or to activate some components. Typically, sampling system trips issue warnings before terminating a process or isolating a component, thereby giving the operator time to respond (IAE89, BAT83, NRC86, AER84). In some cases, the monitor could automatically terminate the burn if the detected conditions would result in unsafe consequences or cause releases to exceed established limits. For example, a sudden rise in stack airborne radionuclide concentrations could indicate a massive failure of the off-gas treatment system or the introduction of waste at unacceptably high concentrations.

In other instances, two or more incinerator process parameters may be fed into a logic circuit to establish operating conditions that should warrant termination of the burn. For example, a sudden loss of differential pressure across a HEPA filter bank and an immediate rise in radionuclide concentrations or release rate would indicate a massive HEPA filter bank failure. Given this scenario, the burn should be terminated as quickly as possible. Whether or not the radiation monitoring system should directly terminate the burn must be weighed against the potential consequences that this action could have on the incinerator itself. A sudden rather than a controlled cooldown could irreversibly damage the refractory lining, warp some internal components, or cause slagging solidification in certain parts of the combustion chamber and ash receiver (IAE89, C0081). A more appropriate action might be to stop introducing additional waste in the combustion chamber. For waste in a solid form, the action would involve shutting down the ram or conveyor feeding the material to the incinerator. For liquid wastes, the process would simply involve shutting down the injection pump. Following these actions, the incinerator could then be brought to a controlled shutdown.

For incinerators with elaborate off-gas treatment systems, the stack monitor could be used to re-route exhaust emissions to standby HEPA filters. In this scenario, the alarm trip would cause one damper to close and another to open. Such actions could be performed without upsetting in operating conditions and would provide time to evaluate the event, its causes, and necessary corrective actions.

3.3 APPLICABILITY OF NONRADIOACTIVE EMISSIONS STACK MONITORING METHODS TO RADIONUCLIDES

As noted above, some sampling methods identified by the Environmental Protection Agency to demonstrate compliance with the Clean Air Act (EPA89) are useable with little or no modification (AMB86, INC89, BUN89). In principle, many of the sampling train components are identical. The only difference revolves around the specificity of the pollutant being collected or analyzed. In some cases, especially for some volatile organic compounds, the methods may not always be compatible with one another. For example, if an impinger uses a solution that enhances the absorption of a specific compound and it is also required to determine the concentrations of tritium and carbon-14 via liquid scintillation counting, the impinger solution could affect the photochemical luminescence process of the scintillation cocktail (OPP87, NCR78, ACG78). The chemical could quench the scintillation process, thereby falsely indicating that there is no tritium or carbon-14. Conversely, the impinger solution could enhance the photochemical luminescence process and erroneously indicate very high tritium and carbon-14 concentrations.

Another important difference revolves around the analytical procedures for determining the presence of radioactivity. If a real-time monitoring system is used, sample collection and processing are conducted under vastly different conditions than samples collected to characterize the presence of organic compounds or metal oxides. In many radiation sampling systems, the sample may not be readily recoverable or, if it is, the sample may no longer represent actual conditions. This is the case for volatile organic compounds which may collect on particulate filters. In time, an equilibrium may be achieved between the sample collection rate and the

evaporation rate, but it may still be impossible to determine reliably the equilibrium ratio. This problem is further compounded by the presence of additional organic vapors which may compete for collection and retention sites, thereby upsetting the equilibrium. Finally, as more particulates are retained on the filter paper, the presence of solids may further upset this equilibrium.

A similar problem exists with the use of activated charcoal traps or cartridges. The presence of organic vapors may poison adsorption sites, causing a breakthrough to occur and rendering the charcoal incapable of capturing or retaining organic vapors or radioiodines. In this example, degradation of activated charcoal cartridges or traps interferes with both radiological and nonradiological characterization of air emissions. The installation of the sampling train and the sequence of filters, charcoal cartridges or traps, and impingers must be designed in anticipation of the pollutants being measured. In some instances, it may be necessary to establish redundant sampling trains, one to characterize radionuclide emissions and the other for organic compounds. This approach was used in conducting the tests and burn trials of the fluidized bed incinerator at the DOE's Rocky Flats Plant (DOE86).

3.4 MONITORING RADIONUCLIDE CONCENTRATION IN INCINERAIOR ASH

There are no instruments currently available for direct assay of alpha, beta, and gamma emitting radionuclide concentrations in ash receivers. Direct assay research on power plant waste indicates that two instrumentation techniques may be applicable to ash assay (EPRB7). Collimated, calibrated gamma spectrometer measurements in combination with predetermined scaling factors for difficult-to-measure nuclides can be used to quantify the gamma-emitting nuclides in a waste form. Passive neutron counting technology, based on surrounding the waste form with neutron detector tubes encased in moderator material has been used to measure TRU content of power plant radioactive wastes. Neither of these techniques have been evaluated for use on incinerator ash.

Initially, the hot ash must be cooled after it is removed from the incinerator. Some incinerators are equipped with ambient radiation monitoring equipment, but such systems are installed only

for occupational radiation protection purposes (IAE89, NRC86, IER88, AER84). Some facilities are also equipped with ambient airborne concentration monitors, again for the purpose of radiation protection, since ashes could become airborne in immediate work areas and subsequently be inhaled by workers.

The normal practice is to collect ashes manually and perform the necessary radiological analyses. Ash sample analyses are conducted by methods similar to those described earlier. The processing of ash samples may involve chemical extraction, sample weighing, and sample splitting (NRC83). Radioanalytical procedures may include a wide range of methods, including gross alpha and beta counting, gamma, x-ray, or alpha spectroscopy, and liquid scintillation counting (NCR78). Because ash samples are usually high in specific activity, the radioanalytical time (i.e., sample counting time) may be reduced. Ash with high specific activity also allows the use of smaller sample sizes, thereby facilitating sample processing and minimizing the volume of analytical waste. As before, the selected analytical methods must be implemented in accordance with good laboratory practices and must comply with established regulatory standards or criteria.

Ash may also be subjected to other types of tests, for example TCLP toxicity, to demonstrate whether or not the ash is a hazardous material. If the ash is radioactive, it may have to be disposed of as radioactive waste and meet established waste acceptance criteria in terms of radionuclide concentrations, presence and concentration of transuranic radionuclides, nuclear criticality safety, and decay heat loads (EGG88). Such waste acceptance criteria require that the physical and radiological properties of the ash be assessed to identify the proper disposal method. Analyses may in part reflect Department of Energy, State, and Federal standards (DOE89). For example, the analyses must characterize free standing liquids, chelating agents, explosive, reactive, flammable, or pyrophoric materials, generation of toxic fumes or vapors, and internal pressures.

For ash that has been stabilized by cement or other solidification media, the analyses must show that the radioactivity will not leach out of the media for the anticipated disposal conditions. It

also must be demonstrated that the solidification media will not degrade or crumble, given disposal depths and pressures, presence of water, microbial activity, and radiation- or chemically induced internal changes or degradation. Analyses are typically conducted under an established set of procedures. If the ash is to be solidified before disposal, samples are first solidified on a bench scale. Once the solidified ash samples have fully cured, several tests are conducted to verify the behavior and properties of the solidified samples. The test results are documented and compared to the waste acceptance criteria to determine whether or not the solidified samples are in compliance. If the criteria have been met, the process is scaled up and applied to the bulk ash volume.

Chapter 3 References

AER84 Aerojet Energy Conversion Company; Mobile Volume Reduction System, Topical Report No. AECC-4-NP-A, prepared for the Nuclear Regulatory Commission, Sacramento, CA, November 4, 1984.

ACG84 American Conference of Industrial Hygienists; Industrial Ventilation, 18th edition, Cincinnati, OH, 1984.

ACG78 American Conference of Industrial Hygienists; Air Sampling Instrumentsfor Evaluation of Atmospheric Contaminants, 5th edition, Cincinnati, OH, 1984.

AMB86 Ambrose, M.L.; National Emission Standards for Hazardous Air PollutantsCompliance Verification Plan for the K-1345 Toxic Substances Control Act Incinerator, Martin-Marietta Energy Systems, Oak Ridge National Laboratory, Oak Ridge, TN, K/HS-109, July 28, 1986.

ANS69 American National Standard; Guide to Sampling Airborne Radioactive Materials in Nuclear Facilities, ANSI N13.1-1969, New York, NY, 1969.

BAT83 Battelle Columbus Laboratories; Safety Related Information for the Volume Reduction Demonstration Facility, BCL-1801, (Rev. 3, 12/16/86) Columbus, OH, August 15, 1983.

BUN89 Bun, D.H.; Continuous Off-Gas Sampling System, Martin-Marietta EnergySystems, Oak Ridge National Laboratory, Oak Ridge, TN, RQT-276, March 1989.

C0081 Cooley, L.R.; Current Practices of Incineration of Low-Level Institutional Radioactive Waste, EG&G, Idaho, Inc, EGG-2076, February 1981.

DOE83 Department of Energy; EML Procedures Manual, Environmental Measurements Laboratory, New York, NY, HASL-300, 26th Edition, 1983.

DOE86 Department of Energy; Rocky Flats Plant Fluidized Bed Incinerator TestPlan, Sampling Locations and Procedures, Appendix 4, Section D-5b (2)(c), p. D-4-31, Document No. C07890010526, November 28, 1986, Rev. N. 0.

DOE89 Department of Energy; Integrated Data Base for 1989: Spent Fuel andRadioactive Waste Inventories, Projections and Characteristics, DOE/RW-006, Rev. 5, November 1989.

EGG82 Radioactive Waste Incineration at Purdue University, EG&G, Inc.Idaho National Engineering Laboratory, DOE/LLW-12T, November 1982.

EGG88 Informal Report: Low-Level and Mixed Waste Incinerator Survey Report,EG&G, Inc. Idaho National Engineering Laboratory, EGG-LLW-8269, October 1988.

EPA84 Environmental Protection Agency; Radiochemistry Procedures Manual, Eastern Environmental Radiation Facility, EPA 520/5-84-006, Montgomery, AL, Aug. 1984.

EPA89 Environmental Protection Agency; Final Rule and Notice of Reconsideration, NESHAPS for Radionuclides, Appendix B to 40 CFR 61, FR Vol.54, No. 240, 51654 - 51715, December 15, 1989.

EPR87 Electric Power Research Institute; Advanced Radioactive Waste Assay Methods, EPRI NP-5497, November 1987.

IAE89 International Atomic Energy Agency; Treatment of Off-Gas from Radioactive Waste Incinerators, Technical Reports Series No. 302, Vienna, 1989.

INC89 The 1989 Incineration Conference; Incineration Basics Course, May 2, 1989, Knoxville TN.

IRU_ Irujo, M.J. and Bucci, J.R.; Savannah River Plant LLW Incinerator: Operational Results and Technical Development.

KOC81 Kocker, D.C.; Radioactive Decay Data Tables, Department of Energy, DOE/TIC-11026, 1981.

KUR__ Kurz Instrument, Inc.; Mass Flow Sampling and Isokinetic Systems, Monterey, CA, undated document.

LAN83 Landolt, R.R.; Evaluation of a Small, Inexpensive Incinerator for Institutional Radioactive Waste, Health Physics, Vol. 44, No.6, pp.671675, June 1983

NCR87 National Council on Radiation Protection and Measurements; Exposure ofthe Population in the United States and Canada from Natural Background Radiation, NCRP Report No. 94, issued Dec. 30, 1987.

NCR75 National Council on Radiation Protection and Measurements; NaturalBackground Radiation in the United States, NCRP Report No. 45, issued Nov. 15, 1975.

NRC86 Nuclear Regulatory Commission; Safety Evaluation Report Related to theVolume Reduction Services Facility, Babcock & Wilcox, Parks Township, PA, Docket 70-364, April 1986.

NRC83 Nuclear Regulatory Commission; Incineration of a Typical LWR Combustible Waste and Analysis of the Resulting Ash, NUREG/CR-3087, Battelle Pacific Northwest Labs, May 1983.

NCR78 National Council on Radiation Protection and Measurements; A Handbook ofRadioactivity Procedures, Report No. 58, Washington, DC, November 1, 1978.

OPP87 Oppelt, E.T.; Incineration of Hazardous Waste - A Critical Review, JAPCA, Vol. 37, No.5, May 1987, pp. 558-586.

SAI85 Science Applications International Corporation; Stack Isotopic Monitoring System - Application and Technical Specifications, San Diego, CA, November 1985.

SEG_ Diagram from Mr. Bud Arrowsmith (Scientific Ecology Group) to Mr. Larry Coe () April 9, 1990.

SOR89 Sorrento Electronics, Inc.; Dual Alpha/Beta Fixed Filter ParticulateRadiation Monitors for Plant 8 - USDOE Fernald, Equipment Manual, E-1151416, San Diego, CA, December 1989.

TER88 Terrell, M.S.; Incineration Test Results of a Fluidized Bed IncineratorSystem, Duke Power Company, Radwaste Engineering, Charlotte, NC, March 31, 1988.

TS083 Tsoulfanidis, N.; Measurement and Detection of Radiation, McGraw-Hill, New York, 1983.

VIC__ Victoreen Inc.; Off-Line Gaseous Effluent Monitors - Systems Descriptions and Applications, Cleveland, OH, undated document.

WM85 Swearingen, F.L Van; Waste Management 1985; Incineration of Microspheres, Tuscon, AZ, March 1985.

4. Consideration of Incinerator Accident and Abnormal Operation Scenarios

Consideration of incinerator accident/abnormal operations scenarios, their consequences, and the options available to prevent or mitigate such events is important to ensure protection of the public and workers from potentially harmful exposure due to releases of materials processed at the incinerator. Potential incinerator-related accidents include the following:

Fires and Explosions

- Fires during transportation, accumulation, and storage of incompatible material
- Fire in waste (feed) material preparation
- Catastrophic incinerator failure; e.g., explosions of a severity sufficient to cause failure of the combustion chamber

Emissions Control Feature Failure

- Filter failures
- Vent pipe failures
- Off-gas treatment system failures

Acts of Nature

- Earthquakes
- Tornadoes
- Flooding

Transportation Accidents

Loss of Essential Utilities

- Loss of power
- Loss of water to scrubbers and for quenching ash

Many of the potential hazards are not associated solely or even primarily with the actual operation of the combustion process but rather with one of three broad stages of incinerator operation: the gathering, storage, and handling of the incinerator feed material, the treatment/release of effluent gases, and the handling, storage and disposal of liquid and solid

effluents. Usually the potential for the largest releases of radioactive or hazardous materials falls into one of these stages.

Determination of which specific accidents pose the greatest threats, and what process or emission controls could be used for prevention/mitigation, can only be done on a case-by-case basis using the actual design characteristics and operating conditions of a proposed incinerator to generate an assessment of possible accident scenarios and associated impacts for each individual situation. For example, the characteristics of the feed material (e.g., solid or liquid, Btu content, chemical form) and the method of its storage (tanks, building equipped with fire detection capability and sprinklers, etc.) can significantly affect the likely accident scenarios. As noted earlier in this report, successful incineration of waste material depends on a relatively uniform and consistent waste feed. Considerable attention must thus be given to feed preparation. On the other hand, the nature of hazardous and mixed wastes is such that there is a considerable incentive to minimize any additional handling after the waste has been generated. This poses a dilemma for the designers and operators of waste incinerators. In practical applications, considerable variation in feed materials may be present. The following wide range of waste types intended for incineration as mixed waste at one proposed facility (LLNL) illustrates the potential for abnormalities caused by nonuniform waste feed.

chlorinated and other organic solvents	25%
oils and greases	20%
oil/water and other organic/water mixtures	28%
organic sludges and still bottoms	3%
low-level radioactive solids and containers	17%
nonradioactive solid waste	7%

Range of btu values per lb: 650 - 18,000
Percent range of water content: 0 - 90 percent

As a second example, the design of the off-gas treatment system must be evaluated (what is the sequence of the treatment stages; e.g., are the gases adequately cooled and dried before reaching HEPA filters, or, if the off-gas filters fail will building ventilation filters provide backup

protection). Filtering of off-gases is typically a combination of an aqueous scrubber to cool the exhaust and neutralize and remove acidic compounds followed by a HEPA filter, possibly supplemented by a charcoal filter to capture organic vapors and iodine. Total or partial loss of effective filtering capacity could result in releases of mixed waste particulates, including heavy metals and iodine-131. It is important that there be real-time monitoring of the performance of the HEPA filters and other emission control devices to ensure they are operating at peak efficiency.

HEPA filters are the most common air pollution control device for particulates used in the nuclear industry. Probably the most critical component in controlling radioactive emissions, HEPA filters are essentially delicate structures. They can sustain structural damage relatively easily under conditions of higher-than-designed-for rates of airflow, shock waves (for example, as a result of explosions in the incinerator), higher-than-designed for temperatures, excess humidity, and excess particulate deposits.

A review of the incinerator proposed for LLNL, for example, noted that the HEPA filters designed for controlling the off-gases would be subject to failure as a result of moisture buildup, temperature and pressure surges unless major design changes, including the installation of a prefilter, were implemented (BER88). The emission control system at the Los Alamos CAI is equipped with a quench tower to cool the hot exhaust gases, followed by a wet alkaline scrubber to remove chloride and other acidic gases after which a condenser should remove most free liquid. The dried exhaust is ducted to the HEPA filter. Because the filter medium is made primarily of paper that would be severely weakened by exposure to water, it is important that essentially no moisture be allowed to reach the HEPA filters.

New high strength HEPA filters reportedly have been developed in Europe that appear to have a much greater capacity for withstanding adverse conditions such as excess heat and humidity or high air flow. These filters are being manufactured by European firms and are being installed in German nuclear facilities (BER88).

Finally, as a third example, the storage and handling of the solid and liquid effluents must be reviewed (e.g., could an accident or human factor result in a release from a line or tank that would release radioactive or toxic scrubber liquors to the environment or release dry ash to the atmosphere). Tanks containing feed material typically are equipped with vent pipes. Bulk storage units also contain pressure relief valves. Failure of these components could result in material being vented directly to the atmosphere without passing through the filtration system.

4.1 EXAMPLE ANALYSES OF INCINERATOR ACCIDENT SCENARIOS

As noted earlier, the specific design parameters and operating conditions of each incinerator, in relation to the range of radioactive and mixed waste it is intended to burn, must be analyzed to determine likely accident scenarios and evaluate their consequences. The descriptions that follow summarize analyses that have been performed for several incinerators described in preceding chapters. These cases are used here only as examples. Subsequent changes in design or operating conditions at the incinerators for which they were developed may have altered the likelihood or consequences of any given scenario, however, they serve to illustrate the wide variations that can occur in accident scenarios and consequences.

4.1.1 Scientific Ecology Group (SEG)

In its NESHAPS permit application to the EPA, SEG evaluated the radiological impact of two major accidents: (1) the failure of the heat removal system resulting in thermal destruction of the flue gas filtration system and subsequent release of unfiltered radioactive ash to the environment, and (2) a pressure excursion in the incinerator resulting in rupture of the pressure release diaphragm, release of ash to the incinerator building, and partial ash release to the environment (SEG88). These accidents were evaluated for radiological impact on the environment by determining the approximate radioactive release to the environment and determining the resulting dose by comparison to previous AIRDOS-EPA runs. The following descriptions are quoted from the NESHAPS application.

"FAILURE OF THE HEAT REMOVAL SYSTEM - If feed water to the heat removal system were to fail catastrophically and the incinerator could not be cooled to less than 400 degrees Fahrenheit before baghouse and HEPA filter destruction occurred, the radioactive ash inventory (up to about 5 kg) trapped on the filters would be released. Within 4 minutes the emergency cool-down system would cool the incinerator to less than 400 degrees Fahrenheit and the redundant filtration system would be switched in. Even if the redundant filters could not be used, the system ventilation could be stopped at about 400 degrees Fahrenheit and further releases would cease. Besides the radionuclide inventory trapped on the bag filters and HEPA filters, a much smaller quantity of additional unfiltered radioactivity in flue gases would also be released. Five kilograms of ash have about the same radionuclide content as one year of routine releases except that the iodines, technetium, carbon, and tritium would not be present in the ash, having already been released routinely."

"PRESSURE EXCURSION IN THE INCINERATOR - If a transient overpressure condition occurred such that the pressure release door near the top of the incinerator gave way, a small amount of ash would be blown into the incinerator building, perhaps as much as a few kilograms. To a large extent, this ash would be contained in the building and could create a temporary airborne condition for workers. However, since the plant ventilation is also HEPA filtered, essentially no release to the environment would occur. It should be noted that significant overpressure can only be caused by explosive materials such as large oxygen bottles. The SEG sorting process described elsewhere in this document eliminates this possibility."

SEG determined that the failure of the heat removal system would result in a site boundary (100 meter) whole-body dose of less than 0.1 mrem and a thyroid dose of less than 0.3 mrem. SEG estimated that essentially no release to the environment would occur as a result of the pressure

excursion accident. For comparison, the following annual doses were calculated (again using AIRDOSEPA) for routine operations.

Distance (meters)	Whole Body Dose (mrem)	Thyroid Dose (mrem)
100	2.3	17
200	1.2	9
300	0.8	6
500	0.5	3.8
800	0.4	2.7
1300	0.3	2.1
1800	0.26	1.7

SEG noted that these doses fall well within the required EPA limits of 25 mrem/yr (whole body) and 75 mrem/yr (critical organ), and are substantially below the approximately 120 mrem/yr whole-body dose from natural background for that area.

4.1.2 Rocky Flats

In 1987 the Colorado Department of Health (CDH) prepared a preliminary public health risk assessment for the radioactive component of proposed trial burns at the DOE Rocky Flats Plant mixed waste fluidized bed incinerator (COL87). One maximum "credible" accident scenario and one "incredible" accident scenario were analyzed. Both depleted uranium and weapons grade plutonium were slated to be used in the trial burns. The proposed trial burns did not take place; however, the following summaries from the Colorado assessment do provide an illustration of the nature and consequences of potential accidents.

A Maximum Incinerator Trial Burn Credible Accident scenario, primarily based on the overpressurization of the Fluidized Bed Incinerator system, was evaluated.

The CDH report lists the following assumptions for this accident evaluation:

- 1 hour fueled fire release and 1 hour exposure to the plume; Pasquill Stability Factor F (least dispersion)
- low average wind speed of 3 meters/second (6.7 mph); 0 meter effective stack height (low immediate dispersion)
- X/Q from "Workbook of Atmospheric Dispersion Estimates, 1969" (DHEW) for 1.2 miles, .0000833 seconds/cubic meter
- both radioactive materials are in both forms (liquid and solid) of mixed waste
- no radioactive materials are retained in the ash
- overpressure route uses three HEPA stages (release fraction = 0.005 x 0.002 x 0.002 = 0.000 000 002)
- total 1 hour inventory is released over 1 hour and the exposure is for 1 hour for dose calculation
- there is no retention or plateout in the incinerator or ventilation equipment
- a 70-year dose accumulation period for all organs after the time of an assumed "acute" exposure
- Class Y materials (cleared from the lung over a period greater than 1 year
- a high breathing rate of 1.2 cubic meters per hour (28.8 cubic meters per day or 1.2 liters per minute)

The resulting 70-year committed dose equivalents for the impacted organs were in the range of 1×10^{-9} rem or smaller. The overall individual lifetime risk for radiation-caused disease resulting from this accident scenario was conservatively calculated to be one chance in 1.09×10^{9}. The CDH reported that with adjustments for conservatism, this risk would fall to one chance in 1.53×10^{17}.

The CDH evaluated an "incredible" Incinerator Trial Burn Accident scenario as one in which the entire filtering system is non-functional (destroyed). The assumptions used to calculate the

70-year organ dose commitments were stated to be basically the same as those noted above, except that no credit was taken for any filtering. The doses calculated for a 1-hour feed rate accident was in the range of 1.8 rem or smaller for this scenario. The overall individual lifetime risk for radiation-caused disease from this scenario was conservatively calculated to be one chance in 2.17×10^{3}. Adjusted for conservatism, this number was also said to fall to 1.53×10^{17}.

4.1.3 Duke Power Company

Duke Power Company analyzed four potential worst case accidents in its initial submittal to the NRC for approval to operate its low-level waste incinerator (DUK85). Duke noted that the choice of these accidents was made after the radiological consequences of a spectrum of potential failure events were analyzed. Subsystems and components which might contain radioactive materials in significant quantities were identified and separated for analysis purposes as follows:

- Contaminated oil storage and feed systems.
- Wet solids storage and feed system.
- Dry active waste storage and feed system.
- Fluid bed process vessels.
- Bed material storage and transfer hoppers.
- Scrubber preconcentrator and scrub liquor recirculation circuit.
- Product Storage Hopper.
- Process Filter/Adsorber Assembly.

These components were analyzed for accident consequences on the basis of presence of activity alone. Duke states that attempts were made to postulate mechanisms by which releases could originate, but that the main factor in choosing worst case accidents to be analyzed in detail was the radiological consequence potential, independent of the likelihood of occurrence. Table 4-1 lists the activity releases (in Ci) assumed for these worst case accidents.

Table 4-1. Activity Releases - Worst Case Accidents (Ci) Duke Power Company Incinerator[a]

Nuclide	Carbon Adsorber Fire	Product Hopper Rupture	Scrub Circuit Failure	Trash Fire
Total	0.9	3.7(+1)[b]	1.4	2.2(-1)
H-3	0	-	-	2.4(-3)
C-14	-	4.0(-3)	-	8.8(-5)
Mn-54	-	1.9(-1)	-	1.3(-3)
Fe-55	-	7.2(-1)	-	4.8(-2)
Ni-59	-	8.4(-4)	-	5.7(-5)
Co-58	-	1.0(+1)	-	1.2(-2)
Co-60	-	1.6(+0)	-	9.6(-2)
Ni-63	-	2.6(-1)	-	1.8(-2)
Nb-94	-	2.7(-5)	-	1.8(-6)
Sr-90	-	7.8(-3)	-	1.8(-4)
Tc-99m	-	4.0(-2)	-	-
Tc-99	-	3.4(-5)	-	7.5(-7)
Mo-99	-	4.4(-2)	-	-
I-129	1.1(-3)	1.1(-4)	1.4(-6)	2.2(-6)
I-131	9.0(+0)	7.5(+0)	1.7(-1)	-
I-133	2.5(-2)	2.5(-2)	3.0(-3)	-
I-134	1.0(-3)	1.0(-3)	8.5(-4)	-
Cs-134	-	5.9(+0)	-	1.7(-2)
Cs-135	-	3.4(-5)	-	7.5(-7)
Cs-137	-	1.0(+0)	-	2.5(-2)

[a] Source: DUK85

[b] Exponential notation, 3.7(+1) means $3.7 \times 10^{+1}$.

The four accidents selected for further analysis are as follows:

(1) The Process Gas Filter Assembly was analyzed because of the long term collection of particulate activity on the HEPA filters and iodine on the carbon adsorber.

(2) The rupture of the Product Storage Hopper was analyzed due to the large amount of high specific activity product ash collected within the hopper.

(3) The Scrubber Preconcentrator scrub liquor circuit failure was analyzed due to the buildup of radioactive iodine which may recirculate in the scrub circuit.

(4) A fire involving the flammable contaminated trash was also analyzed since significant volumes of these contaminated wastes may accumulate in storage areas prior to incineration.

The following paragraphs excerpted from the Duke submittal to the NRC briefly describe each postulated accident, how it would be detected, and its projected radiological consequences.

Process Gas Carbon Adsorber Release - This postulated accident involves the release of iodine activity collected on the process gas carbon adsorber. A fire of undetermined origin involving the process gas carbon adsorber is the postulated release mechanism.

High temperatures in the carbon bed would be detected by the operator who could initiate the fire protection system as necessary. The loss of differential pressure across the filter/adsorber assembly would also alert the operator to the accident.

It was conservatively assumed that all iodine activity input to the Volume Reduction Subsystem is collected on the carbon adsorber and that the adsorber was in service for 6 months prior to the event. Credit for iodine decay was taken and a 95 percentile

accident X/Q of 2.2×10^{-4} s/m^3 was used in the dose analysis. The resulting whole-body dose offsite for this event was calculated to be 1.9 mrem. The maximum organ dose was found to be 1020 mrem to the thyroid of an individual breathing air (a maximum individual breathing rate of 3.47×10^{-3} m^3/s assumed in all accident inhalation doses calculated) at the site boundary during the event.

Product Hopper Rupture - The rupture of a loaded Product Hopper would result in the release of dry product ash to the surrounding cubicle. Ventilation systems serving the cubicle could transport this ash to the outside environment; resulting in offsite exposure.

A Product Hopper rupture could result from natural phenomena, such as an earthquake, or an overpressure transient from an undetermined source within the system.

The postulated causes (i.e., explosion or earthquake) of a Product Hopper rupture would be readily detected by the operator at the onset of any such event; resulting in immediate Volume Reduction System shutdown. In any case, where a rupture occurred unnoticed, the operator would be alerted by high radioactivity concentrations in the HVAC exhaust flow, hopper pressure change, and area monitors.

It was conservatively assumed that 100 percent of the product ash contained in a fully loaded hopper escapes unfiltered via the cubicle ventilation system. Worst case product ash nuclide concentrations were calculated based on calcined concentrates with an assumed volume reduction factor of 11. The resulting particulate plume was assumed to be transported undepleted to the site boundary. The resulting maximum whole-body dose offsite was calculated to be 85 mrem. The maximum organ dose was determined to be 860 mrem to the thyroid of an individual breathing air at the site boundary during the event.

Scrub Liquor Circuit Failure - The postulated failure of the preconcentrator scrub liquor circuit would result in the spillage of concentrated liquid containing iodine. The concern

here will be the evolution of gaseous radioactive iodines which could be transported offsite in air. Any liquid released from the scrub circuit will be contained within the facility and should not be available for transport in ground or surface waters offsite.

The release of the scrub inventory could result from a rupture of either the Scrubber Preconcentrator vessel or recirculation piping.

The loss of a significant quantity of scrub liquor would result in the lowering of the scrub liquor level in the Scrubber Preconcentrator sump. This would be noticed by the operator. If no operator action is taken or the sump inventory is lost rapidly, the process would automatically shutdown due to loss of fluid flow to the venturi.

It was assumed that all the scrub solution in the Scrubber Preconcentrator sump and recirculation piping is spilled. Iodine recirculation and decay within the dryer/off-gas loop is analyzed assuming an iodine DF of 2 for the dryer/cyclone. Maximum activity releases are calculated for each isotope. The postulated release assumes 100 percent of the calculated maximum buildup activity is available for transport offsite. The resulting maximum whole-body dose offsite was calculated to be 0.04 mrem. The maximum organ dose was determined to be 20 mrem to the thyroid of the individual breathing at the site boundary during the event.

A groundwater transport analysis was also analyzed for this postulated worst case liquid release event. The saprolite soil characteristic of the Oconee site is an effective barrier to the migration of radionuclides. The movement of radionuclides released in this postulated worst case event would be so extremely slow that concentrations resulting at the nearest potable intake would be well below 10 CFR 20, Appendix B, Table II, Column 2 maximum permissible concentration values.

Trash Fire - A fire involving contaminated trash being stored prior to incineration would result in offsite exposure from activity transported along with other combustion products through the air. A fire could result from accidental causes.

Facility smoke detectors would ensure prompt detection of any fire in the storage areas. The visible smoke resulting from a fire would provide a secondary means for detection of this postulated accident.

It was conservatively assumed that as much as 80 cubic meters of contaminated trash activity is released and transported offsite due to the fire. The resulting maximum whole-body dose was calculated to be 0.3 mrem. The maximum organ dose was determined to be 5.7 mrem to the bone of an individual breathing air at the site boundary during the fire.

For comparison, the maximum total body (child) and critical organ (infant thyroid) doses for airborne effluents from normal operations were calculated at 1.5×10^{-3} mrem/yr and 1.8×10^{-1} mrem/yr, respectively.

Chapter 4 References

BER88 Bergman, W., "Review of Some Health and Safety Aspects of the Incinerator Planned for the LLNL Decontamination and Waste Treatment Facility (DWTF)," Safety Science Group, Special Projects Division, Hazards Control Department, Lawrence Livermore National Laboratory, December 23, 1988.

COL87 Colorado Department of Health, Rocky Flats Plant Trial Burn Health Risk Assessment, by Letter of Thomas P. Looby, Assistant Director, Office of Health and Environmental Protection, to Dr. Jim Ruttenbur, Center for Disease Control, June 30, 1987.

DUK85 Duke Power Company Transmittal, Request for Approval to Operate the Oconee Nuclear Station Radioactive Waste Volume Reduction Incinerator, by Letter of Hal B. Tucker, Vice President, Nuclear Production, to Harold R. Denton, Director, Office of Nuclear Reactor Regulation, U. S. Nuclear Regulatory Commission, June 10, 1985.

SEG88 Scientific Ecology Group Radioactive Waste Incinerator NESHAPS Permit Application, Radioactive Material License Amendment Application, Air Pollution Control Permit Application, May 19, 1988.

5. Comparison of Incineration with Other Volume Reduction Technologies

A number of technologies and techniques are used to reduce the volume and radionuclide content of solid waste. These techniques and technologies are often grouped into end-point, source, and administrative control categories. End-point controls generally refer to technologies that reduce the volume of solid waste after the waste has been accumulated. Incineration and compaction are good examples of end-point techniques. Source controls emphasize reducing the volume of waste at the point of generation. For example, segregating and decontamination/recycling of wastes are source control techniques. Administrative controls are specific suggestions to improve waste management operations and general housekeeping. Neat, organized, and well-planned facilities and operations generate less waste. Advanced planning can reduce the amount of unnecessary materials that enter radioactive areas and that become contaminated.

End-point controls include sorting, shredding, compaction, supercompaction, incineration, and storage for decay.

Administrative and source control techniques include maximizing compactable drum weights, landfill disposal of Below Regulatory Concern wastes, limiting access to radiation control areas, decontamination and reuse of materials, and use of strippable coatings.

This chapter briefly reviews volume reduction factor (VRFs) associated with end-point control technologies.

End-point volume reduction techniques are primarily applied to general trash, often referred to as dry active waste (DAW) and consisting of a variety of materials that become contaminated through normal operations. End-point volume reduction is best viewed as part of a process, not the simple application of a technology. Figure 5-1 presents the overall flow of an example process.

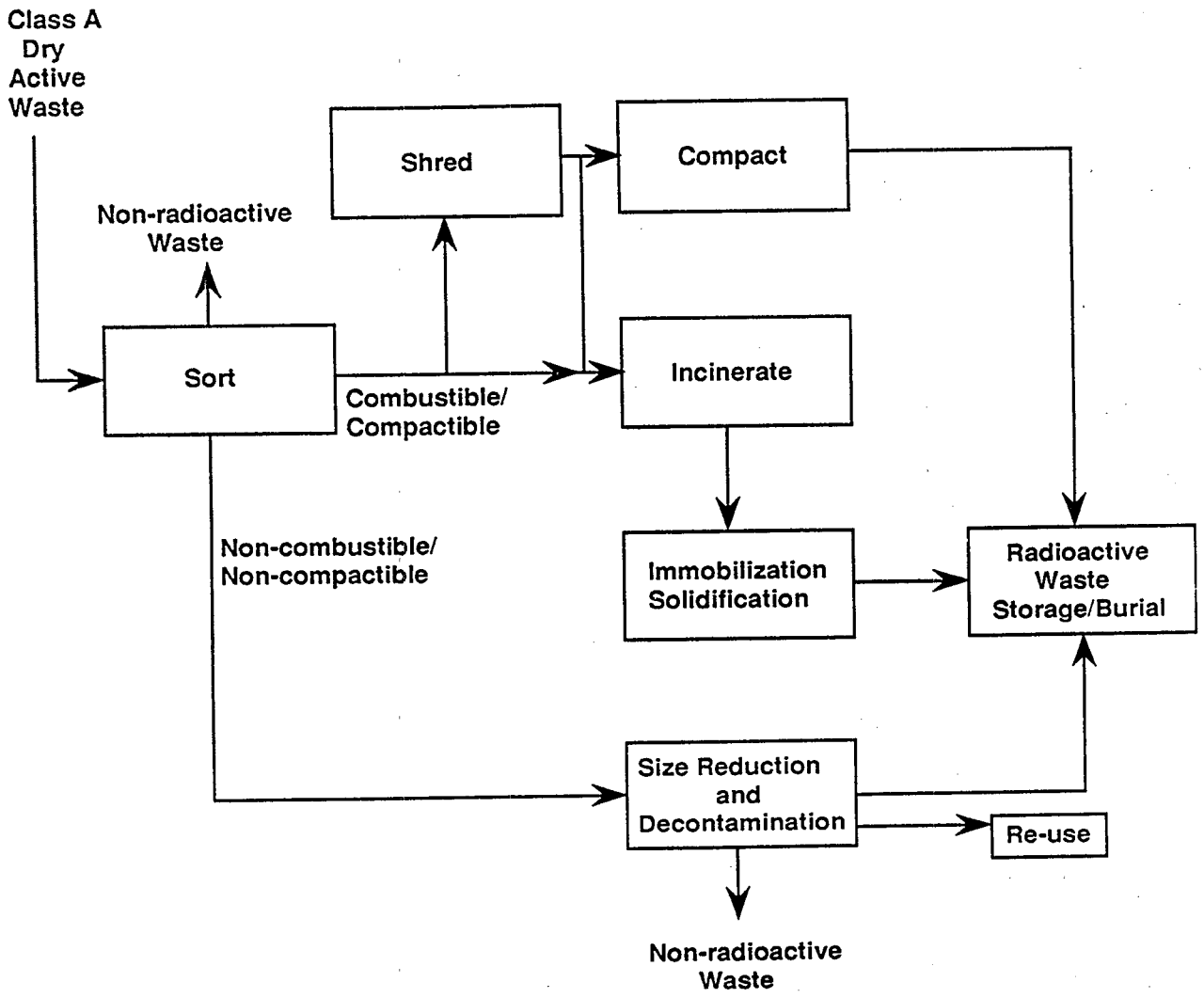

Figure 5-1. Volume Reduction Logical Process

5.1 SORTING

As radioactive trash is generated, it usually receives some form of pretreatment, generally consisting of sorting the material, such as separating combustible from noncombustible material, prior to incineration or separating compactable from noncompactable material prior to compaction. Hand sorting is the most direct method of segregating wastes into constituents that are amenable to treatment by a particular technology, or into radioactive and nonradioactive components.

Pneumatic sorting by an air or inert gas stream can also separate lower density combustible materials, such as paper, plastic, and rags, from higher density noncombustible material such as glass and metal. Manual sorting for radioactivity consists of using a sorting table where bags with low radiation levels are segregated. Radiation readings used for this initial screening have been reported as about 1 mrem/h for typical nuclear reactor facilities (NRC 81a). The contents of these bags are opened, and the individual items are scanned and segregated. Automated trash monitors that are more sensitive and reliable for segregating radioactive from nonradioactive waste also are available (SHR 86; SNE 88). DAW volume deductions of 31 percent through the use of a trash sorting table have been reported (SNE 88).

5.2 SHREDDING

Combustible and compactable materials are sometimes shredded to produce small pieces. Shredding by itself yields some volume reduction because of the greater packaging efficiencies. Shredding is also used to achieve improved performance of compactors and as a necessary pretreatment for certain kinds of incinerators.

5.3 COMPACTION

Typical trash compactors, which are widely used throughout the nuclear industry, consist of a mechanical or hydraulic ram that applies a compressive force of 430 to 2,100 psi and uses a

standard 55-gallon drum as the compaction vessel. Standard compactors can potentially achieve volume reduction factors up to 4 depending on the void volume and the resiliency of the trash. However, the average reported volume reduction factor is 2. A shredder mated with a 1,270-psi compactor has been developed that achieves a 50-percent greater volume reduction than a compactor alone (NRC 81).

5.4 SUPERCOMPACTION

Supercompactors, which apply a force of about 8,000 psi, can achieve a 7-fold or greater volume reduction factor for uncompacted dry active waste. If the waste has already been compacted, supercompaction can achieve an additional 2to 4-fold volume reduction.

5.5 STORAGE FOR DECAY

Many radionuclides used by hospitals, universities, research facilities, and in some industrial applications have relatively short half-lives that make it feasible to store radioactive waste for decay. Typically, short-lived radionuclides that are stored for 10 half-lives can be considered nonradioactive and disposed of as such. The passing of 10 half-lives reduces the radionuclide content of the waste by a factor of 2^{10} (or about a 1,000-fold reduction in radioactivity). It is important to recognize, however, that a 1,OOO-fold reduction in the radioactivity of waste does not guarantee that the waste is suitable for disposal.

5.6 COMBUSTION

Most dry active waste and other forms of organic waste can be reduced in volume through oxidation processes including incineration, pyrolysis, acid digestion, and molten salt combustion. Incineration involves the burning of combustible materials in air or in an oxygen-rich atmosphere. Pyrolysis is volatilization in an oxygen-deficient atmosphere that gasifies part of the waste material. Acid digestion involves oxidation of materials by nitric acid in a

concentrated sulfuric acid and nitric acid media. Molten salt combustion involves air oxidation of combustible materials in a molten salt environment.

Table 5-1 summarizes volume reduction factors of the different types of technologies.

Table 5-1. Volume reduction factors of selected technologies

Technology	Typical Use	Volume Reduction Factor	
Sorting	Low-Level Waste	3	
Drum Compactor	Low-Level Waste	2	
Box Compactor	Low-Level Waste	2.2	
Shredder/Compactor	Low-Level Waste	3.3	
Shredder/High-Pressure Compactor	Low-Level Waste	5.5	
Supercompactor	Low-Level Waste	7.0	
Compactor/Supercompactor	Low-Level Waste	11.0	
Storage for Decay	Short Half-life Waste	Potentially Very Large	
Pathological Incinerator	Institutional Trash, Biowaste, Organic Liquids	Trash	20
		Glass	4
		Plastic	>100
		Fluids	>100
		Biowaste	15
Agitated Hearth Incinerator	Transuranic (TRU) trash	Trash	40
Controlled Air Incinerator	TRU, Low-Level Waste	Trash	40
Cyclone Drum Incinerator	Compacted TRU trash	Trash	43
Rotary Kiln Incinerator	Municipal Solid Waste, Industrial Solid, Liquid, and Gaseous Waste		---
Pyrolysis	TRU Waste		---
Acid Digestion	TRU Waste	Trash	23
Molten Salt Combustion	Municipal Waste and Chemical Wastes		--- ---
Fluidized Bed (Calciner) Combustion	Aqueous Waste, Shredded Waste, Wet Solids	Resins	18
		Filter Sludge	5
		Evaporator Bottoms	8
		Trash	80

* Prepared from References NRC 81 and NRC 81a.
--- Denotes that the information was not provided in NRC 81a.

Chapter 5 References

NRC81 Nuclear Regulatory Commission; Data Base for Radioactive Waste Management Waste Source Options Report. NUREG/CR-1759, November 1981.

NRC81a Nuclear Regulatory Commission; Volume Reduction Techniques in Low Level Radioactive Waste Management. NUREG/CR-2206, September 1981.

SHR86 Shriner, D.G. et al.; A Regional Approach to Determine Waste Segregation/Volume Reduction Program. In "Waste Management '86". March 1986.

SNE88 Snead, P.B. "Volume Reduction of Dry Active Waste by Use of a Waste Sorting Table at the Brunswick Nuclear Power Plant" in Proceedings of the Tenth Annual DOE Low-Level Waste Management Conference, CONF880839. December 1988.

6. Summary

6.1 REPORT OBJECTIVE

This report, consisting of Volume I - Technology, and Volume II - Risks of Radiation Exposure, provides basic information on the technology and radiological risk associated with incineration of radioactive and mixed wastes. The report is in response to a request from the State of New Mexico to the US EPA Control Technology Center for basic information on incineration of radioactive and mixed wastes. The approach to filling the request was to obtain information from incinerator operators and describe the waste streams, off-gas emission control technology, emissions monitoring principles and technology, emissions, and associated radiological risks. It was recognized that the experience history of radioactive and mixed waste incineration research, test, and evaluation is not as extensive as for hazardous waste incineration. As the information gathering progressed, it also became apparent that there is a general absence of operational data acquired in a consistent, methodical fashion that will allow direct correlations between incinerated waste characteristics and stack radionuclide emissions. The causes for this lack of usable data are related to waste management practice or incinerator/exhaust stack design.

6.2 INCINERATION

Incineration of combustible waste is a proven volume reduction technology. Comparisons with several volume reduction methods are summarized below:

Method	Reduction Factor
Compacting	2
Sorting	3
Shredding/Compacting	3
Supercompacting	7
Compacting/Supercompacting	11
Acid Digesting	23
Incinerating (Controlled Air)	40
Storing for Decay	Very Large

A generic incineration flowsheet is shown in Figure 6-1. Some components, for example, "Feed Preparation," "Feed Metering and Injection," and "Combustion," are essentially independent of the waste contaminants; therefore, hazardous waste incineration experience with these components is directly applicable to radioactive/mixed waste incineration. Hazardous waste incineration "Ash Removal System," "Ash Disposal," "Offgas Cleanup System," "Residue Treatment System," "Residue Disposal," and "Stack" experience is useful but less applicable. Actual radioactive and mixed waste incineration data are required in order to fully describe the effects of these components on radioactive effluents. Some pertinent characteristics of the three incinerator types most commonly used or proposed for use with radioactive mixed wastes are summarized below:

Rotary Kiln Advantages	Fluidized Bed	Controlled Air
Advantages		
Wide variety of liquids and solids	Solids, liquids, and gases	Wide variety of solids, sludges
Accepts drums and bulk containers	Accepts feed fluctuations	Long residence times
High turbulence and air exposure	Relatively low acid gas formation	Low entrainment of ash
Can use wet gas scrubbing system	Lower cost emission control	Complete combustion (multi-hearth)
Residence time controlled by rotation	Low maintenance costs	Small fluctuations in offgas stream
Simplified waste preparation	Enhanced combustion efficiency	Can use several fuels
Temperatures to 2500°F	Relatively low maintenance costs	High fuel efficiency
Disadvantages		
High capital costs	Difficult to remove bed residuals	High maintenance costs
Refractory damage	Bed preparation and maintenance	Refractory and hearth failure
Possible incomplete combustion	Relatively high operating costs	Difficult to feed bulk wastes
High particulate loading	Eutectic formation	Lower operating temperature
Low thermal efficiency	Difficult to feed irregular bulk waste	Slow temperature response
Seal maintenance problems	Select feed to avoid bed degradation	Difficult to control supplementary fuel firing
Particulates in off-gas		

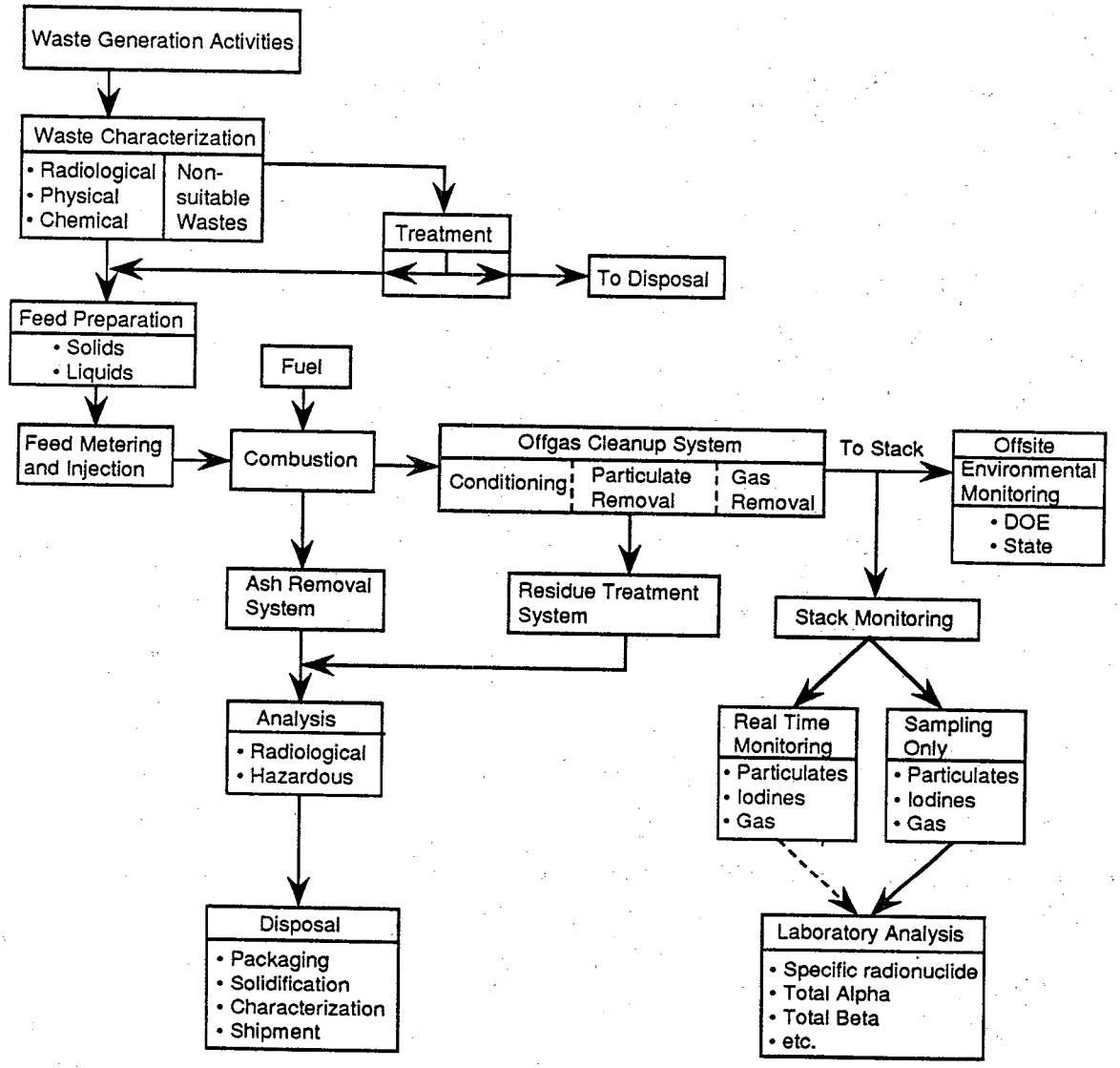

Figure 6-1. Generic Incineration Flowsheet

The incinerators listed below provide the operating history of large volume radioactive/mixed waste incineration in the U.S.

Los Alamos National Laboratory	operable - awaiting EIS
Oak Ridge National Laboratory	operable - in test
Savannah River Site	shutdown for modification (B-G)
Idaho National Engineering Lab	operating (WERF)
Rocky Flats Plant	shutdown for modification
Brookhaven National Laboratory	operable
Scientific Ecology Group	operating
Advanced Nuclear Fuels	operating
DSSI	permitting stage - operational 1991
Duke Power Company	lay-up (Oconee)
Commonwealth Edison Company	lay-up (Byron, Braidwood)

6.3 RELEVANT ISSUES

Several relevant issues regarding the incineration of radioactive and mixed waste are summarized below. The reader is urged to refer to the respective sections of this report for more details. A brief description of the major concerns are included for each issue.

6.3.1 Waste Acceptance Criteria

- The formulation of waste acceptance criteria is a necessary component in establishing a quality control program designed to limit radioactive emissions and offsite exposures.

- It should be recognized that DOE is in the process of revising its waste acceptance criteria for low-level, TRU, and mixed wastes. Such activities have in part been motivated by DOE's Environmental Restoration Plan, operational needs, and stricter DOE Order guidelines. Accordingly, data characterizing past operational practices may not always represent current or even future impacts.

- In establishing acceptance criteria, the radiological characterization of the waste must address such considerations as:
  - List acceptable and nonacceptable radionuclides and establish a maximum allowed concentration and quantity for each acceptable radionuclide. Acceptability is dependent on the licensing conditions (i.e., DOE Orders), the capability of the incinerator system to remove radionuclides from the offgas, the limits of detection of the stack radionuclide monitoring system, and the offsite release scenario.

  - Address the differences between volatile and nonvolatile radionuclides. The behavior of radionuclides through the incineration process differs for readily volatilized species such as iodine and nonvolatiles (refractories) such as plutonium. Very volatile radionuclides, such as carbon and tritium, will not be trapped by offgas systems and will escape in the stack effluent.

  - Detailed characterization of the waste is necessary to ensure that contaminant concentrations do not exceed limits. Consider the halflife, decay, and initial source quantity of each radionuclide. Waste may contain long-lived radionuclides such as plutonium-239 and strontium-90 and short-lived radionuclides such as iodine-131. For short-lived radionuclides, storage for radioactive decay prior to incineration may be desirable since it may reduce radioactivity to insignificant amounts.

  - Nuclear criticality is generally not a major concern, but should be addressed, depending upon the presence of radionuclides such as plutonium and uranium. Accumulation of such radionuclides in larger amounts in ashes and incinerator components should be evaluated.

- Acceptance criteria must also address the nonradiological characteristics of the waste.

- Waste forms include liquids and solids with widely varying chemical/physical properties, some of which may adversely affect incinerator components because of their corrosive properties.

- Low-level waste includes laboratory equipment and supplies, decontamination debris, and miscellaneous solids and sludges.

- Mixed waste may contain scintillation fluids, solvents, degreasers, lead, spent filters, and soil.

- Incinerators require consistent feed rate and content. Physical properties of the waste, including Btu content and waste form, must be monitored to ensure stable incinerator operating conditions.

- The included low-level, TRU, and mixed waste characterization is based on several compilations of data gathered by DOE over the past 4 years. The actual distributions of waste volumes and properties may change because of DOE's current activities associated with the Environmental Restoration Program. Accordingly, the characterization and data summaries provide only a snapshot description of low-level, TRU, and mixed waste generation, treatment, and disposal activities at the given DOE facilities.

6.3.2 Incinerator Operations

- Incinerators function best under strictly controlled, predictable, steady-state conditions. Analysis and control of feed material to prevent fluctuating conditions in the quantity, physical, and chemical waste characteristics are critical aspects of operations.

- Most problems encountered are associated with operational reliability and maintenance. Problems typically include: frequent replacement of off-gas system filters, corrosion of components, plugging of heat exchangers, incomplete incineration, accumulation of residual ashes in systems and components not designed for ash removal, personnel exposure, contamination control, fires in filter systems, humidity control, and HEPA filter clogging.

- Incineration results in higher concentrations of radioactivity and higher radiation levels in ash, when compared to the feed material. The majority of ash is collected in the ash bin, however, small amounts are retained in other sections of the incinerator system, creating potential removal and handling problems. Ash removal and handling must be performed under radiologically controlled conditions. Some of the major concerns associated with ash handling and disposal are occupational radiation exposure and exposure to the public during transportation to disposal sites. The TCLP toxicity test may result in ash designation as mixed or hazardous waste.

- System designs that include the merging of incinerator stack gas into a common plenum with other effluent sources may preclude any meaningful interpretation of effluent results. Such features make it difficult to resolve radionuclide emissions from the incinerator.

- Desirable incinerator operating characteristics for the destruction of hazardous materials may be counter productive in minimizing some types of emissions. For example, large residence times, normally required for the destruction of organic compounds, may result in the greater formation of metal oxide fumes. Some radionuclides, which volatilize at higher temperatures, may coalesce as particulates at cooler temperatures with higher specific activity than the waste itself.

- Radioactive/mixed waste incinerators can achieve reliability, availability, and maintainability factors similar to that experienced by hazardous waste incinerators.

Batch mode or periodic operation and HEPA filter replacement or failures are factors that adversely affect the achievement of such goals.

- Potential accident scenarios include fires and explosions, emission control systems failures, transportation mishaps, and loss of essential utilities. Identification of expected operational events and application of prevention/mitigation measures must be based on specific design characteristics and operating practices.

6.3.3 Stack Monitoring

- The exhaust stream must be sampled representatively, i.e., isokinetically. The sampling train design must include sample probe, sample collector or monitor, flowrate meter, sampling pump, and electronic controls, such as audio/visual alarms and shut-off systems, if needed.

- Analysis can be performed on a real-time basis by a dedicated monitoring system with required measurement sensitivity, or conducted periodically by pulling a sample and performing the analysis in a laboratory. Real-time system operation, calibration, and maintenance must conform to QA/QC procedures for such systems. Laboratory sample analysis must also be performed under radiological quality assurance and control procedures.

- Monitoring systems using gross counting methods can provide information only on composite activities; i.e., the sum total of the radioactivity retained on the collection media integrated over the sampling duration period. Systems that use spectrometers (alpha or gamma) have the capability to identify each radionuclide as a function of time.

- Real-time radionuclide monitoring is inherently difficult. Some radionuclides, including tritium and C-14, cannot be monitored in real-time. Areas of concern

include radionuclide plateout, selection of proper sample collection media for particulates and gases, radiation detector sensitivity, transient nature of releases, detector response characteristics, proper equipment maintenance, and corrections for background radioactivity.

- Off-the-shelf incinerator stack real-time monitors are not commercially available. Several vendors and manufacturers have installed off-theshelf real-time monitors originally designed for nuclear facilities. Many of such commercial systems are readily adaptable to incinerator applications.

- Most of the relevant operating experience resides with DOE. Since most systems are designed as one-of-a-kind, the potential range of application and technology transfer are limited. DOE emissions data (required by NESHAPS) consist generally of annual release quantities in curies, and do not correlate emissions versus waste processing activities. NESHAPS does not require this type of reporting format since NESHAPS is only concerned with offsite releases and public exposures.

6.3.4 Radiological Risk Assessment

- In conducting a risk assessment analysis, each step in the waste management process (in this case incineration) must be identified and thoroughly characterized. This characterization must typically consider waste forms and generation practices, incinerator and facility parameters, and environmental factors or site features. Every step of the process, from waste receipt to ash disposal and stack effluent release, must then be analyzed for assessing the potential risks to workers and the public, as well as environmental impacts.

- Radiological impact is waste stream specific and is based on expected waste volume, radionuclide distributions, and waste forms for a given incinerator design and operating practices.

- A simple method with which to assess the radiological impacts associated with waste management is given in Volume II of this report. The method allows one to devise assess emissions, occupational exposures, and offsite doses and risks based on generic or default radionuclide waste concentrations. This method is presented only for illustrative purposes and is not intended to be used to conduct a formal risk assessment analysis.

6.3.5 Airborne Radionuclide Emissions

- A review of past operating practices indicates that radionuclide emissions are generally well below DOE standards and guidelines.

- Since all measurements are made at the point of release, radionuclide concentrations at downwind receptor locations would be still lower than those observed at the stack.

- DOE incinerator emissions are typically identical to their commercial counterparts, with the exception of plutonium, americium, and uranium.

- Radionuclide emissions can be generally classified into two categories; short-lived and long-lived. Short-lived radionuclides typically include H-3, C-14, P-32, S-35, Cr-51, Mn-54, Fe-55, Co-57, Tc-99m, I-125, I-131, etc. Long-lived radionuclides include Tc-99, Cs-137, Sr90, Am-241, Pu-238, Pu-239, Pu-240, U-233, U-234, U-238, etc.

- In general, yearly emissions of long-lived radionuclides are on the order of 10 microcuries or less. Short-lived radionuclides are, however, released, at times, at higher activity levels.

- A comparison between radioactivity contained in waste feed and stack emissions reveals that overall incinerator decontamination factors range from $1O^{+3}$ to 10^{+11} depending upon the type of offgas treatment system. This comparison includes all radionuclides for which data were available except for H-3, C-14, and radioiodines.

- A review of DOE and commercial incineration practices indicates that low-level waste is incinerated in varying frequencies and volumes, and involve different waste streams or forms, e.g., liquids, solids, etc. The data indicate that incineration schedules typically reflect operational needs rather than the imposition of regulatory constraints or limits.

APPENDIX 1

NRC INCINERATION GUIDELINES FOR MATERIAL LICENSEES

These guidelines apply to noncommercial waste disposal, that is, incineration of a licensee's own waste. NRC may request additional information regarding proposed commercial incinerators as appropriate to assess adequately the potential impact on public health and safety and the environment.

Specific NRC approval is not needed in order to incinerate certain exempted categories of radioactive waste. For example, 10 CFR Section 20.306 provides that tritium and carbon-14 in low concentrations in liquid scintillation media and animal tissue (less than or equal to 0.05 microcuries of tritium or carbon-14 per gram of liquid scintillation medium or per gram of animal tissue averaged over the weight of the entire animal) may be disposed of without regard to radioactivity. This exemption does not relieve the applicant from complying with other local requirements for the disposal of such waste.

The following information must be provided when applying to the NRC for a license to incinerate waste requiring specific NRC approval.

1. The characteristics of the incinerator and the site must be submitted. This includes the height of the stack, rated air flow, distance from incinerator to nearest air intake duct of adjacent building, and location and distance to nearest unrestricted areas, residence, school, hospital, etc.

2. The specific isotopes and the maximum amount of each isotope to be incinerated per burn must be stated. For the combination of isotopes listed, calculations must be submitted to demonstrate that the following conditions will be met:

a. The gaseous effluent from the incinerator stack will not exceed the limits specified for air in Appendix B, Table II, 10 CFR Part 20 when averaged over a 24-hour period.

b. In order to be in compliance with the ALARA philosophy stated in 10 CPR Section 20.1(c), the gaseous effluent from the incinerator stack should be a fraction (less than 10 percent) of the limits specified for air in 10 CFR 20, Appendix B, Table II, when averaged over a period of one year.

If more than one isotope is involved, the calculations must follow the "sum of ratios" method in the note at the end of 10 CFR Part 20, Appendix B.

3. The method to be used to determine the concentration of radionuclides released, both as airborne effluents, and as any liquid effluents from scrubbers, condensers, or associated systems.

4. The maximum number of burns to be performed in any one week and the maximum number of burns per year must be stated.

5. The method for estimating the concentration of radioactive material remaining in the ash residue must be described. The most conservative assumption must be used unless scientific evidence to the contrary is presented.

   The procedures for collection, handling, and disposal of the ash residue, including radiation safety precautions to be observed, must be described.

6. The procedures to be followed to minimize exposure to personnel during all phases of the operation, including instructions given to personnel handling the combustibles and the ash, must be described.

7. a. Any State or local permits which are required to operate an incinerator must be identified. Evidence that such permits have been obtained must be submitted.

b. State and local government agencies should be notified early of plans to incinerate radioactive waste, because they often must respond to inquiries from local citizens and organizations. It is preferable that the applicant make such notifications and obtain comments since the applicant is closer to the community. Indication that such notifications have been made can be done by including copies of letters to State and local government agencies and their comments with the application. If the applicant does not notify State and local governments, the NRC will do so directly.

APPENDIX 2

NUCLEAR REGULATORY COMMISSION OUTLINE FOR SAFETY RELATED TOPICS DESIGN AND OPERATION OF LOW-LEVEL RADIOACTIVE WASTE INCINERATOR

I. PRINCIPAL DESIGN CRITERIA

a. Purpose of Incinerator Program

Incinerator feed
Incinerator products and byproducts
Incinerator functions

b. Structural and Mechanical Safety

c. Safety Protection Systems

Confinement barriers and systems
Off-gas treatment and ventilation
Controls and instrumentation
Nuclear criticality safety
Radiation protection
Fire and explosion
Feed and product handling and storage
Decommissioning

II. FACILITY DESIGN

a. Summary Description

Location and facility layout
Principal features

b. Incinerator Building

Structural specifications
Building layout
Incinerator description

c. Support Systems

Support requirements
Support systems descriptions

d. Service and Utility Systems

Building ventilation
Incinerator fuel
Utilities, electrical, steam, water, etc.
Safety communications and alarms
Fire protection
Maintenance

III. PROCESS SYSTEMS

a. Process Description

Narrative
Flow diagrams and sheets

b. Process Chemistry and Physical and Chemical Properties

c. Mechanical Process Systems

d. Waste receiving, storage, and handling, waste feeding; Product handling, packaging, and storage

e. Chemical Process Systems

Incineration
- trash,
- resins,
- liquids,
- others

f. Process Support Systems

Instrumentation and control
Maintenance and repair

g. Waste Feed, Product, and Byproduct Analyses

IV. PROCESS CONFINEMENT AND MANAGEMENT

a. Ventilation and Off-gas Treatment

Waste feed ventilation
Incinerator ventilation

b. Off-gas Treatment

Equipment and system description
Operating characteristics
Operating procedures

c. Product Handling Ventilation

d. Product Handling, Packaging, and Storage

Equipment and system description
Characteristics, concentrations, and volumes
Packaging
Storage

e. Effluent Sampling and Monitoring

f. Airborne

g. Liquid

V. RADIATION PROTECTION

a. Radiation Sources

b. Radiation Protection Design Features

Facility design
Shielding
Ventilation
Area radiation monitoring
Airborne radioactivity monitoring

VI. ALARA Program

a. Design considerations

b. Operational considerations

APPENDIX 3

EXCERPTS FROM ILLINOIS REGULATIONS

Section 340.1060 Concentration of Radioactivity in Effluents to Unrestricted Areas

a) A licensee or registrant shall not possess, use, or transfer licensed material so as to release to an unrestricted area radioactive material in concentrations which exceed the limits specified in Appendix A, Table II, of this Part, except as authorized pursuant to Sections 340.3020 or 340.1060(b). For purposes of Section 340.1060, concentrations may be averaged over a period of not greater than 1 year.

b) An application for a license or amendment may include proposed limits higher than those specified in Section 340.1060(a). The Department will approve the proposed limits if the applicant demonstrates:

1) that the applicant has made a reasonable effort to minimize the radioactivity contained in effluents to unrestricted areas; and

2) that it is not likely that radioactive material discharged in the effluent would result in the exposure of an individual to concentrations of radioactive material in air or water exceeding the limits specified in Appendix A, Table II, of this Part.

c) An application for higher limits pursuant to Section 340.1060(b) shall include information demonstrating that the applicant has made a reasonable effort to minimize the radioactivity discharged in effluents to unrestricted areas, and shall include, as pertinent:

1) information as to flow rates, total volume of effluent, peak concentrations of each radionuclide in the effluent, and concentration of each radionuclide in the effluent averaged over a period of 1 year at the point where the effluent leaves a stack, tube, pipe, or similar conduit;

2) a description of the properties of the effluents, including:

A) chemical composition,

B) physical characteristics, including suspended solids content in liquid effluents, and nature of gas or aerosol for air effluents,

C) the hydrogen ion concentrations (Ph) of liquid effluents; and,

D) the size range of particulates in effluents released into air;

3) a description of the anticipated human occupancy in the unrestricted area where the highest concentration of radioactive material from the effluent is expected, and in the case of a river or stream, a description of water uses downstream from the point of release of the effluent;

4) information as to the highest concentration of each radionuclide in an unrestricted area, including anticipated concentrations averaged over a period of 1 year:

A) in air at any point of human occupancy, or

B) in water at points of use downstream from the point of release of the effluent;

5) the background concentration of radionuclides in the receiving river or stream prior to the release of liquid effluent;

6) a description of the environmental monitoring equipment, including sensitivity of the system, and procedures and calculations to determine concentrations of radionuclides in the unrestricted area and possible reconcentrations of radionuclides; and

7) a description of the waste treatment facilities and procedures used to reduce the concentration of radionuclides in effluents prior to their release.

d) For the purposes of Section 340.1060, the concentration limits in Appendix A, Table II, of this Part shall apply at the boundary of the restricted area. The concentration of radioactive material discharged through a stack, pipe, or similar conduit may be determined with respect to the point where the material leaves the conduit. If the conduit discharges within the restricted area, the concentration at the boundary may be determined by applying appropriate factors for dilution, dispersion, or decay between the point of discharge and the boundary.

e) In addition to limiting concentrations in effluent streams, the Department may limit quantities of radioactive material released in air or water during a specified period of time if it appears that the daily intake of radioactive material from air, water, or food by a suitable sample of an exposed population group, averaged over a period not exceeding 1 year, would otherwise exceed the daily intake resulting from continuous exposure to air or water containing one-third (1/3) the concentration of radioactive material specified in Appendix A, Table II, of this Part.

f) The provisions of Section 340.1060 do not apply to disposal of radioactive material into sanitary sewage systems, which is governed by Section 340.3030.

g) In addition to the other requirements of this Part, licensees or registrants engaged in uranium fuel cycle operations shall also comply with the provisions of 40 CFR 190, "Environmental Radiation Protection Standard for Nuclear Power Operations," revised as of July 1, 1984, exclusive of subsequent amendments or editions.

(Source: Amended at 10 I11. Reg. 17538, effective September 25, 1986)

Section 340.3020 Method of Obtaining Approval of Proposed Disposal Procedures

a) Any person may apply to the Department for approval of proposed procedures to dispose of radioactive material in a manner not otherwise authorized in this part. Each application shall include a description of the radioactive material, including the quantities and kinds of radioactive material and levels of radioactivity involved, and the proposed manner and conditions of disposal. The application, where appropriate, should also include an analysis and evaluation of pertinent information as to the nature of the environment, including topographical, geological, meteorological, and hydrological characteristics; usage of ground and surface waters in the general area; the nature and location of other potentially affected facilities; and procedures to be observed to minimize the risk of unexpected or hazardous exposures.

b) The Department will not approve any application for a license to receive radioactive material from other persons for disposal on land not owned by a State or the Federal Government.

(Source: Amended to 10 I11. Reg. 17538, effective September 25, 11986)

Section 340.3050 Disposal by Incineration

No licensee or registrant shall incinerate radioactive material for the purpose of disposal or preparation for disposal except as specifically approved by the Department pursuant to Sections 340.1060 and 340.3020.

(Source: Amended at 10 I11. Reg. 17538, effective September 25, 1986)

Note: Following are selected pages from Section 340, Appendix A

SECTION 340. APPENDIX A

CONCENTRATION IN AIR AND WATER ABOVE NATURAl BACKGROUND

Element (atomic number)	Isotope[1]		Table I Column 1 Air (uCi/ml)	Table I Column 2 Water (uCi/ml)	Table II Column 1 Air (uCi/ml)	Table II Column 2 Water (uCi/ml)
Actinium (89)	Ac-227	S	$2X10^{-12}$	$6X10^{-5}$	$8X10^{-14}$	$2X10^{-6}$
		I	$3X10^{-11}$	$9X10^{-3}$	$9X10^{-13}$	$3X10^{-4}$
	Ac-228	S	$8X10^{-8}$	$3X10^{-3}$	$3X10^{-9}$	$9X10^{-5}$
		I	$2X10^{-8}$	$3X10^{-3}$	$6X10^{-10}$	$9X10^{-5}$
Americium (95)	Am-241	S	$6X10^{-12}$	$1X10^{-4}$	$2X10^{-13}$	$4X10^{-6}$
		I	$1X10^{-10}$	$8X10^{-4}$	$4X10^{-12}$	$3X10^{-5}$
	Am-242m	S	$6X10^{-12}$	$1X10^{-4}$	$2X10^{-13}$	$4X10^{-6}$
		I	$3X10^{-10}$	$3X10^{-3}$	$9X10^{-12}$	$9X10^{-5}$
	Am-242	S	$4X10^{-8}$	$4X10^{-3}$	$1X10^{-9}$	$1X10^{-4}$
		I	$5X10^{-8}$	$4X10^{-3}$	$2X10^{-9}$	$1X10^{-4}$
	Am-243	S	$6X10^{-12}$	$1X10^{-4}$	$2X10^{-13}$	$4X10^{-6}$
		I	$1X10^{-10}$	$8X10^{-4}$	$4X10^{-12}$	$3X10^{-5}$
	Am-244	S	$4X10^{-6}$	$1X10^{-1}$	$1X10^{-7}$	$5X10^{-3}$
		I	$2X10^{-5}$	$1X10^{-1}$	$8X10^{-7}$	$5X10^{-3}$
Antimony (51)	Sb-122	S	$2X10^{-7}$	$8X10^{-4}$	$6X10^{-9}$	$3X10^{-5}$
		I	$1X10^{-7}$	$8X10^{-4}$	$5X10^{-9}$	$3X10^{-5}$
	Sb-124	S	$2X10^{-7}$	$7X10^{-4}$	$5X10^{-9}$	$2X10^{-5}$
		I	$2X10^{-8}$	$7X10^{-4}$	$7X10^{-10}$	$2X10^{-5}$
	Sb-125	S	$5X10^{-7}$	$3X10^{-3}$	$2X10^{-8}$	$1X10^{-4}$
		I	$3X10^{-8}$	$3X10^{-3}$	$9X10^{-10}$	$1X10^{-4}$
Argon (18)	Ar-37	Sub[2]	$6X10^{-3}$	------	$1X10^{-4}$	------
	Ar-41	Sub	$2X10^{-6}$	------	$4X10^{-8}$	------
Arsenic (33)	As-73	S	$2X10^{-6}$	$1X10^{-2}$	$7X10^{-8}$	$5X10^{-4}$
		I	$4X10^{-7}$	$1X10^{-2}$	$1X10^{-8}$	$5X10^{-4}$
	As-74	S	$3X10^{-7}$	$2X10^{-3}$	$1X10^{-8}$	$5X10^{-5}$
		I	$1X10^{-7}$	$2X10^{-3}$	$4X10^{-9}$	$5X10^{-5}$
	As-76	S	$1X10^{-7}$	$6X10^{-4}$	$4X10^{-9}$	$2X10^{-5}$
		I	$1X10^{-7}$	$6X10^{-4}$	$3X10^{-9}$	$2X10^{-5}$
	As-77	S	$5X10^{-7}$	$2X10^{-3}$	$2X10^{-8}$	$8X10^{-5}$
		I	$4X10^{-7}$	$2X10^{-3}$	$1X10^{-8}$	$8X10^{-5}$
Astatine (85)	At-211	S	$7X10^{-9}$	$5X10^{-5}$	$2X10^{-10}$	$2X10^{-6}$
		I	$3X10^{-8}$	$2X10^{-3}$	$1X10^{-9}$	$7X10^{-5}$

Element (atomic number)	Isotope[1]		Table I Column 1 Air (uCi/ml)	Table I Column 2 Water (uCi/ml)	Table II Column 1 Air (uCi/ml)	Table II Column 2 Water (uCi/ml)
Californium (98)	Cf-249	S	$2X10^{-12}$	$1X10^{-4}$	$5X10^{-14}$	$4X10^{-6}$
		I	$1X10^{-10}$	$7X10^{-4}$	$3X10^{-12}$	$2X10^{-5}$
	Cf-250	S	$5X10^{-12}$	$4X10^{-4}$	$2X10^{-13}$	$1X10^{-5}$
		I	$1X10^{-10}$	$7X10^{-4}$	$3X10^{-12}$	$3X10^{-5}$
	Cf-251	S	$2X10^{-12}$	$1X10^{-4}$	$6X10^{-14}$	$4X10^{-6}$
		I	$1X10^{-10}$	$8X10^{-4}$	$3X10^{-12}$	$3X10^{-5}$
	Cf-252	S	$6X10^{-12}$	$2X10^{-4}$	$2X10^{-13}$	$7X10^{-6}$
		I	$3X10^{-11}$	$2X10^{-4}$	$1X10^{-12}$	$7X10^{-6}$
	Cf-253	S	$8X10^{-10}$	$4X10^{-3}$	$3X10^{-11}$	$1X10^{-4}$
		I	$8X10^{-10}$	$4X10^{-3}$	$3X10^{-11}$	$1X10^{-4}$
	Cf-254	S	$5X10^{-12}$	$4X10^{-6}$	$2X10^{-13}$	$1X10^{-7}$
		I	$5X10^{-12}$	$4X10^{-6}$	$2X10^{-13}$	$1X10^{-7}$
Carbon (6)	C-14	S	$4X10^{-6}$	$2X10^{-2}$	$1X10^{-7}$	$8X10^{-4}$
	(Co[2])	Sub[2]	$5X10^{-5}$	------	$1X10^{-6}$	------
Cerium (58)	Ce-141	S	$4X10^{-7}$	$3X10^{-3}$	$2X10^{-8}$	$9X10^{-5}$
		I	$2X10^{-7}$	$3X10^{-3}$	$5X10^{-9}$	$9X10^{-5}$
	Ce-143	S	$3X10^{-7}$	$1X10^{-3}$	$9X10^{-9}$	$4X10^{-5}$
		I	$2X10^{-7}$	$1X10^{-3}$	$7X10^{-9}$	$4X10^{-5}$
	Ce-144	S	$1X10^{-8}$	$3X10^{-4}$	$3X10^{-10}$	$1X10^{-5}$
		I	$6X10^{-9}$	$3X10^{-4}$	$2X10^{-10}$	$1X10^{-5}$
Cesium (55)	Cs-131	S	$1X10^{-5}$	$7X10^{-2}$	$4X10^{-7}$	$2X10^{-3}$
		I	$3X10^{-6}$	$3X10^{-2}$	$1X10^{-7}$	$9X10^{-4}$
	Cs-134m	S	$4X10^{-5}$	$2X10^{-1}$	$1X10^{-6}$	$6X10^{-3}$
		I	$6X10^{-6}$	$3X10^{-2}$	$2X10^{-7}$	$1X10^{-3}$
	Cs-134	S	$4X10^{-8}$	$3X10^{-4}$	$1X10^{-9}$	$9X10^{-6}$
		I	$1X10^{-8}$	$1X10^{-3}$	$4X10^{-10}$	$4X10^{-5}$
	Cs-135	S	$5X10^{-7}$	$3X10^{-3}$	$2X10^{-8}$	$1X10^{-4}$
		I	$9X10^{-8}$	$7X10^{-3}$	$3X10^{-9}$	$2X10^{-4}$
	Cs-136	S	$4X10^{-7}$	$2X10^{-3}$	$1X10^{-8}$	$9X10^{-5}$
		I	$2X10^{-7}$	$2X10^{-3}$	$6X10^{-9}$	$6X10^{-5}$
	Cs-137	S	$6X10^{-8}$	$4X10^{-4}$	$2X10^{-9}$	$2X10^{-5}$
		I	$1X10^{-8}$	$1X10^{-3}$	$5X10^{-10}$	$4X10^{-5}$
Chlorine (17)	Cl-36	S	$4X10^{-7}$	$2X10^{-3}$	$1X10^{-8}$	$8X10^{-5}$
		I	$2X10^{-8}$	$2X10^{-3}$	$8X10^{-10}$	$6X10^{-5}$
	Cl-38	S	$3X10^{-6}$	$1X10^{-2}$	$9X10^{-8}$	$4X10^{-4}$
		I	$2X10^{-6}$	$1X10^{-2}$	$7X10^{-8}$	$4X10^{-4}$

Element (atomic number)	Isotope[1]		Table I Column 1 Air (uCi/ml)	Table I Column 2 Water (uCi/ml)	Table II Column 1 Air (uCi/ml)	Table II Column 2 Water (uCi/ml)
Gold (79)	Au-195	S	$8X10^{-6}$	$4X10^{-2}$	$3X10^{-7}$	$1X10^{-3}$
		I	$6X10^{-8}$	$6X10^{-3}$	$2X10^{-9}$	$2X10^{-4}$
	Au-196	S	$1X10^{-6}$	$5X10^{-3}$	$4X10^{-8}$	$2X10^{-4}$
		I	$6X10^{-7}$	$4X10^{-3}$	$2X10^{-8}$	$1X10^{-4}$
	Au-198	S	$3X10^{-7}$	$2X10^{-3}$	$1X10^{-8}$	$5X10^{-5}$
		I	$2X10^{-7}$	$1X10^{-3}$	$8X10^{-9}$	$5X10^{-5}$
	Au-199	S	$1X10^{-6}$	$5X10^{-3}$	$4X10^{-8}$	$2X10^{-4}$
		I	$8X10^{-7}$	$4X10^{-3}$	$3X10^{-8}$	$2X10^{-4}$
Hafnium (72)	Hf-181	S	$4X10^{-8}$	$2X10^{-3}$	$1X10^{-9}$	$7X10^{-5}$
		I	$7X10^{-8}$	$2X10^{-3}$	$3X10^{-9}$	$7X10^{-5}$
Holmium (67)	Ho-166	S	$2X10^{-7}$	$9X10^{-4}$	$7X10^{-9}$	$3X10^{-5}$
		I	$2X10^{-7}$	$9X10^{-4}$	$6X10^{-9}$	$3X10^{-5}$
Hydrogen (1)	H-3	S	$5X10^{-6}$	$1X10^{-1}$	$2X10^{-7}$	$3X10^{-3}$
		I	$5X10^{-6}$	$1X10^{-1}$	$2X10^{-7}$	$3X10^{-3}$
		Sub[2]	$2X10^{-3}$	------	$4X10^{-5}$	------
Indium (49)	In-113m	S	$8X10^{-6}$	$4X10^{-2}$	$3X10^{-7}$	$1X10^{-3}$
		I	$7X10^{-6}$	$4X10^{-2}$	$2X10^{-7}$	$1X10^{-3}$
	In-114m	S	$1X10^{-7}$	$5X10^{-4}$	$4X10^{-9}$	$2X10^{-5}$
		I	$2X10^{-8}$	$5X10^{-4}$	$7X10^{-10}$	$2X10^{-5}$
	In-115m	S	$2X10^{-6}$	$1X10^{-2}$	$8X10^{-8}$	$4X10^{-4}$
		I	$2X10^{-6}$	$1X10^{-2}$	$6X10^{-8}$	$4X10^{-4}$
	In-115	S	$2X10^{-7}$	$3X10^{-3}$	$9X10^{-9}$	$9X10^{-5}$
		I	$3X10^{-8}$	$3X10^{-3}$	$1X10^{-9}$	$9X10^{-5}$
Iodine (53)	I-125	S	$5X10^{-9}$	$4X10^{-5}$	$8X10^{-11}$	$2X10^{-7}$
		I	$2X10^{-7}$	$6X10^{-3}$	$6X10^{-9}$	$2X10^{-4}$
	I-126	S	$8X10^{-9}$	$5X10^{-5}$	$9X10^{-11}$	$3X10^{-7}$
		I	$3X10^{-7}$	$3X10^{-3}$	$1X10^{-8}$	$9X10^{-5}$
	I-129	S	$2X10^{-9}$	$1X10^{-5}$	$2X10^{-11}$	$6X10^{-8}$
		I	$7X10^{-8}$	$6X10^{-3}$	$2X10^{-9}$	$2X10^{-4}$
	I-131	S	$9X10^{-9}$	$6X10^{-5}$	$1X10^{-10}$	$3X10^{-7}$
		I	$3X10^{-7}$	$2X10^{-3}$	$1X10^{-8}$	$6X10^{-5}$
	I-132	S	$2X10^{-7}$	$2X10^{-3}$	$3X10^{-9}$	$8X10^{-6}$
		I	$9X10^{-7}$	$5X10^{-3}$	$3X10^{-8}$	$2X10^{-4}$
	I-133	S	$3X10^{-8}$	$2X10^{-4}$	$4X10^{-10}$	$1X10^{-6}$
		I	$2X10^{-7}$	$1X10^{-3}$	$7X10^{-9}$	$4X10^{-5}$
	I-134	S	$5X10^{-7}$	$4X10^{-3}$	$6X10^{-9}$	$2X10^{-5}$
		I	$3X10^{-6}$	$2X10^{-2}$	$1X10^{-7}$	$6X10^{-4}$
	I-135	S	$1X10^{-7}$	$7X10^{-4}$	$1X10^{-9}$	$4X10^{-6}$
		I	$4X10^{-7}$	$2X10^{-3}$	$1X10^{-8}$	$7X10^{-5}$

Element (atomic number)	Isotope[1]		Table I Column 1 Air (uCi/ml)	Table I Column 2 Water (uCi/ml)	Table II Column 1 Air (uCi/ml)	Table II Column 2 Water (uCi/ml)
Molybdenum (42)	Mo-99	S	$7X10^{-7}$	$5X10^{-3}$	$3X10^{-8}$	$2X10^{-4}$
		I	$2X10^{-7}$	$1X10^{-3}$	$7X10^{-9}$	$4X10^{-5}$
Neodymium (60)	Nd-144	S	$8X10^{-11}$	$2X10^{-3}$	$3X10^{-12}$	$7X10^{-5}$
		I	$3X10^{-10}$	$2X10^{-3}$	$1X10^{-11}$	$8X10^{-5}$
	Nd-147	S	$4X10^{-7}$	$2X10^{-3}$	$1X10^{-8}$	$6X10^{-5}$
		I	$2X10^{-7}$	$2X10^{-3}$	$8X10^{-9}$	$6X10^{-5}$
	Nd-149	S	$2X10^{-6}$	$8X10^{-3}$	$6X10^{-8}$	$3X10^{-4}$
		I	$1X10^{-6}$	$8X10^{-3}$	$5X10^{-8}$	$3X10^{-4}$
Neptunium (93)	Np-237	S	$4X10^{-12}$	$9X10^{-5}$	$1X10^{-13}$	$3X10^{-6}$
		I	$1X10^{-10}$	$9X10^{-4}$	$4X10^{-12}$	$3X10^{-5}$
	Np-239	S	$8X10^{-7}$	$4X10^{-3}$	$3X10^{-8}$	$1X10^{-4}$
		I	$7X10^{-7}$	$4X10^{-3}$	$2X10^{-8}$	$1X10^{-4}$
Nickel (28)	Ni-59	S	$5X10^{-7}$	$6X10^{-3}$	$2X10^{-8}$	$2X10^{-4}$
		I	$8X10^{-7}$	$6X10^{-2}$	$3X10^{-8}$	$2X10^{-3}$
	Ni-63	S	$6X10^{-8}$	$8X10^{-4}$	$2X10^{-9}$	$3X10^{-5}$
		I	$3X10^{-7}$	$2X10^{-2}$	$1X10^{-8}$	$7X10^{-4}$
	Ni-65	S	$9X10^{-7}$	$4X10^{-3}$	$3X10^{-8}$	$1X10^{-4}$
		I	$5X10^{-7}$	$3X10^{-3}$	$2X10^{-8}$	$1X10^{-4}$
Niobium (41)	Nb-93m	S	$1X10^{-7}$	$1X10^{-2}$	$4X10^{-9}$	$4X10^{-4}$
		I	$2X10^{-7}$	$1X10^{-2}$	$5X10^{-9}$	$4X10^{-4}$
	Nb-95	S	$5X10^{-7}$	$3X10^{-3}$	$2X10^{-8}$	$1X10^{-4}$
		I	$1X10^{-7}$	$3X10^{-3}$	$3X10^{-9}$	$1X10^{-4}$
	Nb-97	S	$6X10^{-6}$	$3X10^{-2}$	$2X10^{-7}$	$9X10^{-4}$
		I	$5X10^{-6}$	$3X10^{-2}$	$2X10^{-7}$	$9X10^{-4}$
Osmium (76)	Os-185	S	$5X10^{-7}$	$2X10^{-3}$	$2X10^{-8}$	$7X10^{-5}$
		I	$5X10^{-8}$	$2X10^{-3}$	$2X10^{-9}$	$7X10^{-5}$
	Os-191m	S	$2X10^{-5}$	$7X10^{-2}$	$6X10^{-7}$	$3X10^{-3}$
		I	$9X10^{-6}$	$7X10^{-2}$	$3X10^{-7}$	$2X10^{-3}$
	Os-191	S	$1X10^{-6}$	$5X10^{-3}$	$4X10^{-8}$	$2X10^{-4}$
		I	$4X10^{-7}$	$5X10^{-3}$	$1X10^{-8}$	$2X10^{-4}$
	Os-193	S	$4X10^{-7}$	$2X10^{-3}$	$1X10^{-8}$	$6X10^{-5}$
		I	$3X10^{-7}$	$2X10^{-3}$	$9X10^{-9}$	$5X10^{-5}$
Palladium (46)	Pd-103	S	$1X10^{-6}$	$1X10^{-2}$	$5X10^{-8}$	$3X10^{-4}$
		I	$7X10^{-7}$	$8X10^{-3}$	$3X10^{-8}$	$3X10^{-4}$
	Pd-109	S	$6X10^{-7}$	$3X10^{-3}$	$2X10^{-8}$	$9X10^{-5}$
		I	$4X10^{-7}$	$2X10^{-3}$	$1X10^{-8}$	$7X10^{-5}$

Element (atomic number)	Isotope[1]		Table I Column 1 Air (uCi/ml)	Table I Column 2 Water (uCi/ml)	Table II Column 1 Air (uCi/ml)	Table II Column 2 Water (uCi/ml)
Phosphorus (15)	P-32	S	$7X10^{-8}$	$5X10^{-4}$	$2X10^{-9}$	$2X10^{-5}$
		I	$8X10^{-8}$	$7X10^{-4}$	$3X10^{-9}$	$2X10^{-5}$
Platinum (78)	Pt-191	S	$8X10^{-7}$	$4X10^{-3}$	$3X10^{-8}$	$1X10^{-4}$
		I	$6X10^{-7}$	$3X10^{-3}$	$2X10^{-8}$	$1X10^{-4}$
	Pt-193m	S	$7X10^{-6}$	$3X10^{-2}$	$2X10^{-7}$	$1X10^{-3}$
		I	$5X10^{-6}$	$3X10^{-2}$	$2X10^{-7}$	$1X10^{-3}$
	Pt-193	S	$1X10^{-6}$	$3X10^{-2}$	$4X10^{-8}$	$9X10^{-4}$
		I	$3X10^{-7}$	$5X10^{-2}$	$1X10^{-8}$	$2X10^{-3}$
	Pt-197m	S	$6X10^{-6}$	$3X10^{-2}$	$2X10^{-7}$	$1X10^{-3}$
		I	$5X10^{-6}$	$3X10^{-2}$	$2X10^{-7}$	$9X10^{-4}$
	Pt-197	S	$8X10^{-7}$	$4X10^{-3}$	$3X10^{-8}$	$1X10^{-4}$
		I	$6X10^{-7}$	$3X10^{-3}$	$2X10^{-8}$	$1X10^{-4}$
Plutonium (94)	Pu-238	S	$2X10^{-12}$	$1X10^{-4}$	$7X10^{-14}$	$5X10^{-6}$
		I	$3X10^{-11}$	$8X10^{-4}$	$1X10^{-12}$	$3X10^{-5}$
	Pu-239	S	$2X10^{-12}$	$1X10^{-4}$	$6X10^{-14}$	$5X10^{-6}$
		I	$4X10^{-11}$	$8X10^{-4}$	$1X10^{-12}$	$3X10^{-5}$
	Pu-240	S	$2X10^{-12}$	$1X10^{-4}$	$6X10^{-14}$	$5X10^{-6}$
		I	$4X10^{-11}$	$8X10^{-4}$	$1X10^{-12}$	$3X10^{-5}$
	Pu-241	S	$9X10^{-11}$	$7X10^{-3}$	$3X10^{-12}$	$2X10^{-4}$
		I	$4X10^{-8}$	$4X10^{-2}$	$1X10^{-9}$	$1X10^{-3}$
	Pu-242	S	$2X10^{-12}$	$1X10^{-4}$	$6X10^{-14}$	$5X10^{-6}$
		I	$4X10^{-11}$	$9X10^{-4}$	$1X10^{-12}$	$3X10^{-5}$
	Pu-243	S	$2X10^{-6}$	$1X10^{-2}$	$6X10^{-8}$	$3X10^{-4}$
		I	$2X10^{-6}$	$1X10^{-2}$	$8X10^{-8}$	$3X10^{-4}$
	Pu-244	S	$2X10^{-12}$	$1X10^{-4}$	$6X10^{-14}$	$4X10^{-6}$
		I	$3X10^{-11}$	$3X10^{-4}$	$1X10^{-12}$	$1X10^{-5}$
Polonium (84)	Po-210	S	$5X10^{-10}$	$2X10^{-5}$	$2X10^{-11}$	$7X10^{-7}$
		I	$2X10^{-10}$	$8X10^{-4}$	$7X10^{-12}$	$3X10^{-5}$
Potassium (19)	K-42	S	$2X10^{-6}$	$9X10^{-3}$	$7X10^{-8}$	$3X10^{-4}$
		I	$1X10^{-7}$	$6X10^{-4}$	$4X10^{-9}$	$2X10^{-5}$
Praseodymium (59)	Pr-142	S	$2X10^{-7}$	$9X10^{-4}$	$7X10^{-9}$	$3X10^{-5}$
		I	$2X10^{-7}$	$9X10^{-4}$	$5X10^{-9}$	$3X10^{-5}$
	Pr-143	S	$3X10^{-7}$	$1X10^{-3}$	$1X10^{-8}$	$5X10^{-5}$
		I	$2X10^{-7}$	$1X10^{-3}$	$6X10^{-9}$	$5X10^{-5}$
Promethium (61)	Pm-147	S	$6X10^{-8}$	$6X10^{-3}$	$2X10^{-9}$	$2X10^{-4}$
		I	$1X10^{-7}$	$6X10^{-3}$	$3X10^{-9}$	$2X10^{-4}$
	Pm-149	S	$3X10^{-7}$	$1X10^{-3}$	$1X10^{-8}$	$4X10^{-5}$
		I	$2X10^{-7}$	$1X10^{-3}$	$8X10^{-9}$	$4X10^{-5}$

Element (atomic number)	Isotope[1]		Table I Column 1 Air (uCi/ml)	Table I Column 2 Water (uCi/ml)	Table II Column 1 Air (uCi/ml)	Table II Column 2 Water (uCi/ml)
	Sr-90	S	$1X10^{-9}$	$1X10^{-5}$	$3X10^{-11}$	$3X10^{-7}$
		I	$5X10^{-9}$	$1X10^{-3}$	$2X10^{-10}$	$4X10^{-5}$
	Sr-91	S	$4X10^{-7}$	$2X10^{-3}$	$2X10^{-8}$	$7X10^{-5}$
		I	$3X10^{-7}$	$1X10^{-3}$	$9X10^{-9}$	$5X10^{-5}$
	Sr-92	S	$4X10^{-7}$	$2X10^{-3}$	$2X10^{-8}$	$7X10^{-5}$
		I	$3X10^{-7}$	$2X10^{-3}$	$1X10^{-8}$	$6X10^{-5}$
Sulfur (16)	S-35	S	$3X10^{-7}$	$2X10^{-3}$	$9X10^{-9}$	$6X10^{-5}$
		I	$3X10^{-7}$	$8X10^{-3}$	$9X10^{-9}$	$3X10^{-4}$
Tantalum (73)	Ta-182	S	$4X10^{-8}$	$1X10^{-3}$	$1X10^{-9}$	$4X10^{-5}$
		I	$2X10^{-8}$	$1X10^{-3}$	$7X10^{-10}$	$4X10^{-5}$
Technetium (43)	Tc-96m	S	$8X10^{-5}$	$4X10^{-1}$	$3X10^{-6}$	$1X10^{-2}$
		I	$3X10^{-5}$	$3X10^{-1}$	$1X10^{-6}$	$1X10^{-2}$
	Tc-96	S	$6X10^{-7}$	$3X10^{-3}$	$2X10^{-8}$	$1X10^{-4}$
		I	$2X10^{-7}$	$1X10^{-3}$	$8X10^{-9}$	$5X10^{-5}$
	Tc-97m	S	$2X10^{-6}$	$1X10^{-2}$	$8X10^{-8}$	$4X10^{-4}$
		I	$2X10^{-7}$	$5X10^{-3}$	$5X10^{-9}$	$2X10^{-4}$
	Tc-97	S	$1X10^{-5}$	$5X10^{-2}$	$4X10^{-7}$	$2X10^{-3}$
		I	$3X10^{-7}$	$2X10^{-2}$	$1X10^{-8}$	$8X10^{-4}$
	Tc-99m	S	$4X10^{-5}$	$2X10^{-1}$	$1X10^{-6}$	$6X10^{-3}$
		I	$1X10^{-5}$	$8X10^{-2}$	$5X10^{-7}$	$3X10^{-3}$
	Tc-99	S	$2X10^{-6}$	$1X10^{-2}$	$7X10^{-8}$	$3X10^{-4}$
		I	$6X10^{-8}$	$5X10^{-3}$	$2X10^{-9}$	$2X10^{-4}$
Tellurium (52)	Te-125m	S	$4X10^{-7}$	$5X10^{-3}$	$1X10^{-8}$	$2X10^{-4}$
		I	$1X10^{-7}$	$3X10^{-3}$	$4X10^{-9}$	$1X10^{-4}$
	Te-127m	S	$1X10^{-7}$	$2X10^{-3}$	$5X10^{-9}$	$6X10^{-5}$
		I	$4X10^{-8}$	$2X10^{-3}$	$1X10^{-9}$	$5X10^{-5}$
	Te-127	S	$2X10^{-6}$	$8X10^{-3}$	$6X10^{-8}$	$3X10^{-4}$
		I	$9X10^{-7}$	$5X10^{-3}$	$3X10^{-8}$	$2X10^{-4}$
	Te-129m	S	$8X10^{-8}$	$1X10^{-3}$	$3X10^{-9}$	$3X10^{-5}$
		I	$3X10^{-8}$	$6X10^{-4}$	$1X10^{-9}$	$2X10^{-5}$
	Te-129	S	$5X10^{-6}$	$2X10^{-2}$	$2X10^{-7}$	$8X10^{-4}$
		I	$4X10^{-6}$	$2X10^{-2}$	$1X10^{-7}$	$8X10^{-4}$
	Te-131m	S	$4X10^{-7}$	$2X10^{-3}$	$1X10^{-8}$	$6X10^{-5}$
		I	$2X10^{-7}$	$1X10^{-3}$	$6X10^{-9}$	$4X10^{-5}$
	Te-132	S	$2X10^{-7}$	$9X10^{-4}$	$7X10^{-9}$	$3X10^{-5}$
		I	$1X10^{-7}$	$6X10^{-4}$	$4X10^{-9}$	$2X10^{-5}$
Terbium (65)	Tb-160	S	$1X10^{-7}$	$1X10^{-3}$	$3X10^{-9}$	$4X10^{-5}$
		I	$3X10^{-8}$	$1X10^{-3}$	$1X10^{-9}$	$4X10^{-5}$

Element (atomic number)	Isotope[1]		Table I Column 1 Air (uCi/ml)	Table I Column 2 Water (uCi/ml)	Table II Column 1 Air (uCi/ml)	Table II Column 2 Water (uCi/ml)
Uranium (92)	U-230	S	$3X10^{-10}$	$1X10^{-4}$	$1X10^{-11}$	$5X10^{-6}$
		I	$1X10^{-10}$	$1X10^{-4}$	$4X10^{-12}$	$5X10^{-6}$
	U-232	S	$1X10^{-10}$	$8X10^{-4}$	$3X10^{-12}$	$3X10^{-5}$
		I	$3X10^{-11}$	$8X10^{-4}$	$9X10^{-13}$	$3X10^{-5}$
	U-233	S	$5X10^{-10}$	$9X10^{-4}$	$2X10^{-11}$	$3X10^{-5}$
		I	$1X10^{-10}$	$9X10^{-4}$	$4X10^{-12}$	$3X10^{-5}$
	U-234	S[4]	$6X10^{-10}$	$9X10^{-4}$	$2X10^{-11}$	$3X10^{-5}$
		I	$1X10^{-10}$	$9X10^{-4}$	$4X10^{-12}$	$3X10^{-5}$
	U-235	S[4]	$5X10^{-10}$	$8X10^{-4}$	$2X10^{-11}$	$3X10^{-5}$
		I	$1X10^{-10}$	$8X10^{-4}$	$4X10^{-12}$	$3X10^{-5}$
	U-236	S	$6X10^{-10}$	$1X10^{-3}$	$2X10^{-11}$	$3X10^{-5}$
		I	$1X10^{-10}$	$1X10^{-3}$	$4X10^{-12}$	$3X10^{-5}$
	U-238	S[4]	$7X10^{-11}$	$1X10^{-3}$	$3X10^{-12}$	$4X10^{-5}$
		I	$1X10^{-10}$	$1X10^{-3}$	$5X10^{-12}$	$4X10^{-5}$
	U-240	S	$2X10^{-7}$	$1X10^{-3}$	$8X10^{-9}$	$3X10^{-5}$
		I	$2X10^{-7}$	$1X10^{-3}$	$6X10^{-9}$	$3X10^{-5}$
	U-natural	S[4]	$1X10^{-10}$	$1X10^{-3}$	$5X10^{-12}$	$3X10^{-5}$
		I	$1X10^{-10}$	$1X10^{-3}$	$5X10^{-12}$	$3X10^{-5}$
Vanadium (23)	V-48	S	$2X10^{-7}$	$9X10^{-4}$	$6X10^{-9}$	$3X10^{-5}$
		I	$6X10^{-8}$	$8X10^{-4}$	$2X10^{-9}$	$3X10^{-5}$
Xenon (54)	Xe-131m	Sub[2]	$2X10^{-5}$	------	$4X10^{-7}$	------
	Xe-133	Sub	$1X10^{-5}$	------	$3X10^{-7}$	------
	Xe-133m	Sub	$1X10^{-5}$	------	$3X10^{-7}$	------
	Xe-135	Sub	$4X10^{-6}$	------	$1X10^{-7}$	------
Ytterbium (70)	Yb-175	S	$7X10^{-7}$	$3X10^{-3}$	$2X10^{-8}$	$1X10^{-4}$
		I	$6X10^{-7}$	$3X10^{-3}$	$2X10^{-8}$	$1X10^{-4}$
Yttrium (39)	Y-88	S	$3X10^{-7}$	$2X10^{-3}$	$6X10^{-9}$	$7X10^{-5}$
		I	$5X10^{-8}$	$3X10^{-3}$	$2X10^{-9}$	$9X10^{-5}$
	Y-90	S	$1X10^{-7}$	$6X10^{-4}$	$4X10^{-9}$	$2X10^{-5}$
		I	$1X10^{-7}$	$6X10^{-4}$	$3X10^{-9}$	$2X10^{-5}$
	Y-91m	S	$2X10^{-5}$	$1X10^{-1}$	$8X10^{-7}$	$3X10^{-3}$
		I	$2X10^{-5}$	$1X10^{-1}$	$6X10^{-7}$	$3X10^{-3}$
	Y-91	S	$4X10^{-8}$	$8X10^{-4}$	$1X10^{-9}$	$3X10^{-5}$
		I	$3X10^{-8}$	$8X10^{-4}$	$1X10^{-9}$	$3X10^{-5}$
	Y-92	S	$4X10^{-7}$	$2X10^{-3}$	$1X10^{-8}$	$6X10^{-5}$
		I	$3X10^{-7}$	$2X10^{-3}$	$1X10^{-8}$	$6X10^{-5}$
	Y-93	S	$2X10^{-7}$	$8X10^{-4}$	$6X10^{-9}$	$3X10^{-5}$
		I	$1X10^{-7}$	$8X10^{-4}$	$5X10^{-9}$	$3X10^{-5}$

Element (atomic number)	Isotope[1]		Table I Column 1 Air (uCi/ml)	Table I Column 2 Water (uCi/ml)	Table II Column 1 Air (uCi/ml)	Table II Column 2 Water (uCi/ml)
Zinc (30)	Zn-65	S	$1X10^{-7}$	$3X10^{-3}$	$4X10^{-9}$	$1X10^{-4}$
		I	$6X10^{-8}$	$5X10^{-3}$	$2X10^{-9}$	$2X10^{-4}$
	Zn-69m	S	$4X10^{-7}$	$2X10^{-3}$	$1X10^{-8}$	$7X10^{-5}$
		I	$3X10^{-7}$	$2X10^{-3}$	$1X10^{-8}$	$6X10^{-5}$
	Zn-69	S	$7X10^{-6}$	$5X10^{-2}$	$2X10^{-7}$	$2X10^{-3}$
		I	$9X10^{-6}$	$5X10^{-2}$	$3X10^{-7}$	$2X10^{-3}$
Zirconium (40)	Zr-93	S	$1X10^{-7}$	$2X10^{-2}$	$4X10^{-9}$	$8X10^{-4}$
		I	$3X10^{-7}$	$2X10^{-2}$	$1X10^{-8}$	$8X10^{-4}$
	Zr-95	S	$1X10^{-7}$	$2X10^{-3}$	$4X10^{-9}$	$6X10^{-5}$
		I	$3X10^{-8}$	$2X10^{-3}$	$1X10^{-9}$	$6X10^{-5}$
	Zr-97	S	$1X10^{-7}$	$5X10^{-4}$	$4X10^{-9}$	$2X10^{-5}$
		I	$9X10^{-8}$	$5X10^{-4}$	$3X10^{-9}$	$2X10^{-5}$
Any single radionuclide not listed above with decay mode other than alpha emission or spontaneous fission and with radioactive half-life less than 2 hours.		Sub[2]	$1X10^{-6}$	------	$3X10^{-8}$	------
Any single radionuclide not listed above with decay mode other than alpha emission or spontaneous fission and with radioactive half-life greater than 2 hours.			$3X10^{-9}$	$9X10^{-5}$	$1X10^{-10}$	$3X10^{-6}$
Any single radionuclide not listed above, which decays by alpha emission or spontaneous fission.			$6X10^{-13}$	$4X10^{-7}$	$2X10^{-14}$	$3X10^{-8}$

[1] Soluble (S); Insoluble (I).

[2] "Sub" means that values given are for submersion in a semi-spherical infinite cloud of airborne material.

[3] These radon concentrations are appropriate for protection from radon-222 combined with its short-lived daughters. Alternatively, the value in Table I may be replaced by one-third (1/3) "working level". (A "working level" is defined as any combination of short-lived radon-222 daughters, polonium-218, lead-214, bismuth-214, and polonium-214, in 1 liter of air, without regard to the degree of equilibrium, that will result in the ultimate emission of 1.3 X 10^5 MeV of alpha particle energy.) The Table II value may be replaced by one thirtieth (1/30) of a "working level". The limit on radon-222 concentrations in restricted areas may be based on an annual average.

[4] For soluble mixtures of U-238, U-234 and U-235 in air, chemical toxicity may be the limiting factor. If the percent by weight (enrichment) of U-235 is less than 5, the concentration value for a 40-hour workweek, Table I, is 0.2 milligrams uranium per cubic meter of air average. For any enrichment, the product of the average concentration and time of exposure during a 40-hour workweek shall not exceed 8 X 10^{-3} SA uCi-hr/ml, where SA is the specific activity of the uranium inhaled. The concentration value for Table II is 0.007 milligrams uranium per cubic meter of air. The specific activity for natural uranium is 6.77 X 10^{-7} curies per gram uranium. The specific activity for other mixtures of U-238, U-235 and U-234, if not known, shall be:

$SA = 3.6X10^{-7}$ curies/gram U_2 (U-depleted)
$SA = (0.4 + 0.38E + 0.0034E) \times 10^{-6}$, E lesser than or equal to 0.72,
where E is the percentage by weight of U-235, expressed as percent.

NOTE: In any case where there is a mixture in air or water of more than one radionuclide, the limiting values for purposes of this Appendix should be determined as follows:

1) If the identity and concentration of each radionuclide in the mixture are known, the limiting values should be derived as follows: Determine, for each radionuclide in the mixture, the ratio between the quantity present in the mixture and the limit otherwise established in Appendix "A" for the specific radionuclide when not in a mixture. The sum of such ratios for all the radionuclides in the mixture may not exceed "1" (i.e., "unity").

EXAMPLE: If radionuclides (a), (b), and (c) are present in concentrations C_a, C_b, and C_c, and if the applicable maximum permissible concentrations (MPC's) are MPC_a, MPC_b, and MPC_c respectively, then the concentrations shall be limited so that the following relationship exists:

$$\frac{C_a}{MPC_a} + \frac{C_b}{MPC_b} + \frac{C_c}{MPC_c} \text{ lesser than or equal to } 1$$

APPENDIX 4

INCINERATOR CONTROL FUNCTIONS

A 4.1 FEED SYSTEM

Waste feed system controls are designed to maximize the feed within regulatory constraints (e.g., a maximum allowable feedrate) and operating constraints (e.g., high primary chamber temperature, which limits feedrate when the incinerator is burning high heat value waste materials and high gas velocity, which restricts feedrates for high moisture content and/or high heating value waste).

In a typical feed control system, the operator inputs a setpoint to the controller. The setpoint can be a feed rate (e.g., for a continuous feed system such as a screw feeder or liquid waste system) or a charge weight (e.g., for a batch system such as a ram system). In a continuous solid feed, the system would use a weigh belt or weigh hopper to sense the feedrate of solids, compare the feedrate to the setpoint and adjust the speed of the screw feeder. In a batch system, the charge setpoint is the primary method of controlling the feedrate. Liquid waste feedrate is controlled by comparing the flowrate measurement with the setpoint and adjusting the position of a control valve.

A 4.2 COMBUSTION CONTROLS

Combustion controls maintain a safe temperature in the primary and secondary combustion chambers. This requires the interaction of control loops for temperature, supplemental fuel flowrate, coolant flowrate, and combustion air flowrate. In an incinerator, interaction between combustion and waste feed control loops is also possible. The combustion control systems vary with incinerator type as follows.

A 4.2.1 Rotary Kiln

Rotary kiln temperature is controlled by feeding the measured temperature to a controller that compares it with the setpoint. Several scenarios are possible:

Scenario 1: The measured temperature is below the setpoint and coolant flow is off. The control signal orders increased use of auxiliary fuel. In the lead/lag control system, the signal increases the combustion air flow by increasing the opening of the combustion air damper downstream of the forced draft (FD) fan. After the air damper opens further, the fuel control valve opens proportionately.

Scenario 2: The measured temperature is above the setpoint and coolant flow is off. The control signal causes the fuel flow to decrease by closing the fuel valve further. When the fuel valve starts to close, the air damper closes proportionately.

In Scenarios 1 and 2 above, the cross limiting lead/lag system ensures adequate combustion air to maintain a stable auxiliary burner flame. Fuel and air flowrates are kept in proportion to each other under any change in flowrate. This is the cross-limiting feature. On an increased demand for fuel, air flow is increased followed by increased fuel flow, and on a decreased demand for fuel, fuel flow is decreased followed by decreased air flow. This is the lead/lag feature.

In Scenarios 3 and 4 below, coolant flows are used to control the primary chamber temperatures. In these cases, the auxiliary burner is at minimum firing. Either water or air can be used as coolants, but water is more effective due to its higher heat capacity and the energy associated with the latent heat of vaporization.

Scenario 3: The measured temperature is above the setpoint. The control signal causes increased water flow by opening the water control valve further.

Scenario 4: The measured temperature is below the setpoint, the control signal decreases the water flow by closing the water control valve further.

Accurate temperature measurement in a rotary kiln can be difficult. The thermocouple should be protected by a thermowell and the location should be carefully chosen to avoid inaccurate readings. With a dry ash removal system, excessive air leakage can cause low readings. The steam generated by a wet ash removal system can cause low readings.

The primary chamber of a rotary kiln can operate under either reducing or oxidizing conditions. For an incinerator operating under oxidizing conditions, the use of oxygen trim control is recommended to control excess oxygen. A solid state zirconium oxide oxygen analyzer is preferred for this application because it can be used in situ or with a very short sampling line. The use of an oxygen meter improves incinerator response to transients and reduces the occurrence of carbon monoxide spikes.

The use of feedforward control when firing a liquid waste also improves the response of the incinerator to transients. This is accomplished by measuring the feedrate of the liquid waste and using an estimated heating value. The controller uses the feedrate measurement and the estimated heating value to calculate an air requirement. The air requirement, converted to a signal, acts on the air damper to the forced draft fan.

Unless the unit is of airtight construction, draft or negative pressure must be maintained throughout any hazardous waste incineration system to prevent fugitive emissions. This is achieved by measuring the draft at the point of highest pressure, comparing the draft to the setpoint, and either adjusting the damper or adjusting the speed of the induced draft (ID) fan. The location of highest pressure depends upon the type of incinerator. For a rotary kiln, the highest pressure occurs in the primary chamber. For a controlled air incinerator, the highest pressure may occur in either the primary chamber or secondary chamber. For a fluidized bed incinerator, the highest pressure occurs above the air distributor, but the draft is controlled by

the pressure in the freeboard. It is good practice to control draft with the ID fan or its dampers and to control excess air with the forced draft (FD) fan or its dampers.

The combustion controls for the secondary combustion chamber of a rotary kiln incinerator should be controlled in a manner similar to the primary chamber. The control, however, is less complex. Temperature should be controlled by a cross-limited lead/lag control system.

A 4.2.2 Controlled Air Incinerator

Temperatures of the primary combustion chamber and the secondary combustion chambers are the main control variables in the controlled air incinerator. The temperature in the primary chamber is controlled by varying air flow. If the measured temperature is higher than the setpoint, air flow is decreased by closing the damper that controls air flow to the primary chamber. This reduces the rate of combustion. If the measured temperature is lower than the setpoint, the air flow is increased by opening the damper.

The temperature in the secondary chamber is controlled by varying air flow to the chamber in a manner opposite to the primary chamber. If the measured temperature is higher than the setpoint, air flow is increased by opening the damper that controls air flow to the secondary chamber. If the measured temperature is lower than the setpoint, the air flow is decreased by closing the damper.

A 4.2.3 Fluidized Bed Incinerator

Temperature, excess air, and limestone injection rates are important control variables for fluidized bed incinerators. The temperature of the fluidized bed incinerator responds slowly to transient conditions due to the high heat holding capacity of the bed. Control of the temperature can be accomplished by adding supplemental fuel, injecting water, and controlling excess air. A minimum air flow must be maintained to ensure fluidization. Control of excess air can be

accomplished by oxygen trim control using an oxygen analyzer. Acid gas removal is accomplished by controlling the feedrate of limestone injection.

A 4.3 AIR POLLUTION CONTROL SYSTEM

The quench system can bring the flue gas temperature to the adiabatic saturation temperature of water, which is relatively constant, or to a controlled saturation temperature. The type of system is dependent upon the type of air pollution control equipment used downstream of the quench system.

Systems that reach the adiabatic saturation temperature do not require temperature control. Total dissolved solids (TDS), pH of the quench water, and the level of drained water in the collection sump may have to be regulated. TDS is controlled by measuring the electrical conductivity of the water in the collection sump, comparing the value to a setpoint, and controlling the rate of blowdown to maintain the setpoint. The pH of the quench water is maintained by measuring the pH in the collection sump with a glass electrode, comparing the pH to the setpoint, and adjusting a control valve or the speed of a metering pump to inject the proper quantity of neutralizing agent. Level control an be obtained by measuring the level in the collection sump and by adjusting the position of the control valve for make-up water.

Systems that do not reach the adiabatic saturation temperature require a temperature control loop. The temperature downstream of the quench is measured and compared to the setpoint. If the value is above the setpoint, coolant flow is increased by opening the control valve further.

A 4.4 ACID GAS REMOVAL

For rotary kilns and controlled air incinerators, acid gas removal is the main function of the packed scrubber or the spray dryer. A venturi scrubber also removes acid gases but usually requires a packed scrubber downstream to complete the acid gas removal.

A 4.4.1 Packed Bed Scrubber

Scrubber liquid to gas ratio, pH, and temperature are important control variables for packed scrubbers. The liquid to gas ratio can be optimized by calculating the ratio of the flue gas and liquid flowrates, by comparing the ratio to the setpoint and by adjusting the liquid flowrate control valve. Alternatively, the liquid flow can be maintained at an adequate flowrate that provides a sufficient liquid to gas ratio throughout the operating range of the incinerator. The pH of the scrubber liquid should be controlled by measuring the pH of the liquid exiting the scrubber, comparing the value to the setpoint and adjusting the rate of caustic addition through a control valve. Usually, temperature is controlled to adequately protect the particulate removal device.

A 4.4.1 Spray Dryer

Temperature, slurry concentration, and liquid/gas ratio are important control variables for spray dryers. The inlet temperature of a spray dryer ranges from 400°F to 600°F and the outlet temperature ranges from 250°F to 300°F. Control of temperature and liquid/gas ratio is discussed above.

A 4.5 PARTICULATE REMOVAL

The main particulate removal devices are venturi scrubbers, fabric filters (baghouses), and wet electrostatic precipitators (WESPs). High temperature ceramic filters, sintered metal filters, and electrostatic precipitators have also been used for particulate removal.

A 4.5.1 Venturi Scrubber

Temperature, liquid/gas ratio, scrubber water pH, and scrubber pressure drop are important control variables for a venturi scrubber. Control of temperature, liquid/gas ratio and scrubber water pH have been discussed above. The scrubber pressure drop can be controlled by

measuring the differential pressure across the venturi and adjusting the throat opening to meet the setpoint requirements.

A 4.5.2 Fabric Filter (Baghouse)

Temperature and pressure drop are the control variables for the fabric filter. Temperature control has been discussed above. The pressure drop across the bags is controlled by periodic cleaning.

Compressed air is directed inside each bag at set intervals to discharge the dust that has accumulated on the external surface of the bag. Timed flow reversals are used on independent sections of the baghouse. A shaker mechanism physically shakes bags in a section of the baghouse. The shaker operates in sequence with fresh air dampers that provide a reversing flow to aid dust removal.

A 4.5.3 WESP

Temperature, water flow, and direct current (DC) voltage are the critical control variables for a wet electrostatic precipitator. Control of temperature has been discussed above. Water flow is usually maintained at a constant rate high enough to ensure cleaning. Voltage is maintained by an automatic controller that maintains a sparking rate. When the peak voltage drops the WESP must be water washed to regenerate maximum particulate removal efficiencies.

A 4.6 FINAL PARTICULATE AND RADIOACTIVE GAS REMOVAL

The primary particulate removal devices are followed by a condensation step and a reheat step to provide a superheated flue gas for final particulate and radioactive gas removal (if necessary). The condensation and reheat steps are usually accomplished by heat exchangers. The superheated gas is then passed through a high efficiency particulate air (HEPA) filter for removal of ultrafine particles and a carbon adsorption bed for removal of radioactive gases.

Temperature and pressure drop are important variables for the HEPA filters and the carbon adsorption beds. These are usually monitored.

APPENDIX 5

INCINERATOR MONITORING SUBSYSTEMS

A 5.1 FEED SYSTEM

Feed system monitors check the operation of the feed preparation equipment, check the atomization parameters for the liquid waste, and measure the feedrates of solid and liquid wastes. The feed preparation equipment must be operating to ensure adequate size distribution of the solid wastes sent to the incinerator. Because high liquid waste pressures may cause overfeeding of the incinerator, and low atomizing media pressures could produce emission problems due to inadequate atomization, waste and atomizing media pressure must be monitored. If the liquid waste requires heating, the liquid waste temperature should also be monitored to ensure adequate atomization. For fluidized bed incinerators, limestone or other acid gas removal agents must be monitored to ensure adequate acid gas removal.

A 5.2 PRIMARY COMBUSTION CHAMBER

The primary combustion chamber temperatures and pressures must be monitored. Temperature monitoring ensures adequate waste destruction, and protects equipment. High temperature produces agglomeration in fluidized beds and slagging and refractory damage in rotary kilns and controlled air incinerators. Pressure must be monitored to prevent loss of vacuum that can cause fugitive emissions from openings in the primary chamber. Since fluidized bed incinerators have no secondary combustion chamber, low oxygen and high carbon monoxide concentrations must be monitored at the chamber exit to ensure adequate waste destruction.

A 5.3 BURNER SYSTEM

The burner systems associated with both the primary and secondary chamber are monitored separately but the monitored variables are identical. The primary purpose of the burner

monitoring system is to prevent explosions. Burner monitoring consists of checking fuel, combustion air, and atomizing media pressures; completion of purge; and loss of flame. Low fuel pressure must be monitored to prevent unstable flames. High fuel pressure is monitored to prevent extinction of flames due to blowoff and to prevent overfiring. Low combustion air pressure and low atomizing air pressures are also monitored to prevent unstable flames. An air purge is required to remove potential accumulations of fuel which could explode if exposed to an ignition source. The flame is monitored to prevent an accumulation of an explosive mixture after a flameout.

A burner trip for loss of flame and/or lack of air purge is recommended for startup of the incinerator. However, for most of the incinerator operating time these trip functions are not required or even recommended, as discussed below. Loss of flame should only generate an alarm when the incinerator is operation above 1400°F. The 1400°F level is a temperature at which it is generally agreed that accidental fuel input would be ignited by the hot incinerator interior before a hazardous accumulation could occur. This rule does not apply to boilers which contain cold waterwalls. A purge prior to burner light-off is unnecessary if combustion is already occurring in the combustion chamber.

A 5.4 SECONDARY COMBUSTION CHAMBER

The secondary combustion chambers used in rotary kilns and controlled air incinerators must be monitored for temperature, oxygen, carbon monoxide, and residence time. High temperature must be monitored to prevent damage to the equipment. Low temperature, low oxygen concentration, high carbon monoxide concentration, and residence time (gas velocity) are monitored to ensure adequate waste destruction.

A 5.5 AIR POLLUTION CONTROL SYSTEM

The air pollution control system consists of a quench unit plus devices to control emissions of gases and particulates. With the exception of the burner trip required for high temperature or

loss of coolant flow in the quench, an out-of-limit variable produces a feed cutoff to protect against emissions.

The quench reduces the temperature of the hot gases that exit from the combustion equipment to levels suitable for the downstream air pollution control equipment. Temperature and coolant flowrates are the main variables monitored. High temperature is monitored to protect the downstream equipment. If a baghouse or dry electrostatic precipitator is used, low temperature is monitored to control particulate emissions because liquid interferes with the proper operation of these devices. Coolant flowrates are monitored to ensure adequate cooling.

The variables monitored for a venturi scrubber are pressure drop, vacuum, liquid-to-gas ratio or liquid flowrate, and scrubber water pH. Pressure drop, pH, and liquid-to-gas ratio or liquid flowrate, are monitored to prevent excessive particulate emissions. High vacuum is monitored to protect the equipment.

Fabric filters or baghouses are monitored for broken bags and high pressure drops. These variables are monitored to prevent excessive particulate emissions and to protect the baghouse.

Wet electrostatic precipitators are monitored for low DC voltage and water flowrates. Low DC voltage indicates inadequate field strength for adequate particulate removal. Inadequate water flowrates cause ineffective washing of plate surfaces.

Packed scrubbers are monitored for low scrubber water flowrate, pH of the scrubber water, and high pressure drop. Adequate pH and scrubber water flowrate are required to achieve satisfactory acid gas removal. High pressure drop indicates that cleaning is necessary.

HEPA filters and carbon beds are monitored for high pressure drops to determine when changeout of the HEPA filter element or the carbon bed module is required.

A 5.6 GENERAL MONITORING

The subsystems which affect the entire incinerator are the ID fan, instrument air supply, and electrical power supply. Loss of vacuum, excessive vibration of the ID fan, low instrument air pressure, or loss of electrical power result in a burner trip.

A 5.7 AIR POLLUTION MONITORS

In addition to the equipment monitors, air pollution monitors record carbon dioxide (used for efficiency calculations on PCB incinerators), total hydrocarbons, nitrogen oxides, and sulfur dioxide.

APPENDIX 6

COST ELEMENTS

A 6.1 CAPITAL COSTS

Capital costs are classified as direct or indirect. Direct costs include site preparation, equipment, materials, and labor necessary for physical construction of the plant. Indirect costs include engineering, permitting, regulatory costs, and financing costs.

A 6.1.1 Site Preparation Costs

These costs include planning, management, site design and development, equipment, utility preparation, emergency and safety equipment. Also included are soil excavation, feedstock preparation, and feed handling costs which will vary with the site.

A 6.1.2 Permitting and Regulatory Costs

These costs are associated with regulatory compliance and may include national or regional permits. Preparation of permit applications, sampling and analysis plans, quality assurance project plan, and trial burn reports are usually required. A trial burn may be required to prove overall system performance. The costs of performing the trial burn as well as sampling and analysis activities should be included.

In addition, the costs for developing operating procedures and training operators, as well as health and safety operating manual should be considered.

A 6.1.3 Equipment Costs

These costs include the design, engineering, materials, and equipment procurement, fabrication, and installation of the incinerator. These direct costs include all subsystems and components, for example, the emission control equipment.

A 6.1.4 Start-up and Fixed Costs

After the incinerator is constructed and training is completed, the unit must be started and operated to check the mechanical and technical integrity of the equipment and controls.

A 6.2 OPERATING COSTS

Operating costs include operation, maintenance, transportation, and disposal. Operations and maintenance include the direct cost of material, labor, replacement parts, consumable goods (filters, drums, clothing), utilities, and tools.

A 6.2.1 Labor Costs

This category includes personnel such as operators and supervisors, usually ranging from 2 to 8 percent of the total annual cost. Labor costs can be reduced by increased system automation; they are also affected by the size of the plant, its location, and operating time.

A 6.2.2 Supplies and Consumable Goods

These include filters, drums, clothing, health and safety supplies, and chemicals (such as caustic soda solution for acid gas scrubbing). Fuel (oil, gas) costs depend on the heat value of the waste feed.

A 6.2.3 Utility Costs

These costs vary with the incinerator utilization. Fuel is required for the secondary combustion chamber heating requirements. Power costs include electrical requirements for pumps, fans, mixers, belt drives, lighting, etc. Water may be used for cooling, and in scrubber solution makeup.

A 6.2.4 Disposal

Transportation and disposal costs depend on the type of material, the distance transported, and the type and availability of a disposal site. In the case of radioactive waste, these costs can be significant. Exhibit 2 is the Barnwell, South Carolina, rate schedule for disposal of low-level radioactive waste, effective April 1, 1989.

A 6.2.5 Analytical Costs

In order to ensure that a unit it operating efficiently and meeting environmental standards, a program for continuously analyzing waste feed, stack gas, ash, and water quality is required.

A 6.2.6 Modification, Repair, and Replacement Costs

These costs vary with system design, waste feed composition, and site characteristics. Five percent of the installed cost is sometimes used for this category.

A 6.2.7 Indirect Operating Costs

These include taxes, insurance, administration expenses, overhead, and capital charges. For taxes, insurance, and administration, 4 percent of the capital cost is used for some estimates.

Appendix 7
General Operations Problems and Preventive Maintenance Actions

TABLE A 7-1 Typical Feed Problems

Source of Problems	Consequence of Problem	Preventive Maintenance Action
PVC - HC1	Air pollution control (APC) system corrosion.	Proper materials selection; control system design.
Rubber - SO_2	Can exceed chemical release limits.	APC system design modification.
Teflon - F	Can exceed chemical release limits.	APC system design.
Batchwise feeding system	Transient off-gas composition and temperature with occurrence of incomplete combustion.	Afterburner will reduce off-gas problems; feed small batches.

TABLE A 7-2 Typical Combustion Operating Problems

Source of Problems	Consequence of Problem	Preventive Maintenance Action
NO_x - formation at t> 2200°F	Release limit exceeded	Control temperature. Scrubbing or ammonia injection.
Volatilization (metal oxides)	Deposition on heat exchanger and filters. Accumulation of radionuclides. Clogging.	Subcool vapors.
Incomplete combustion	Filter clogging. Release limits exceeded.	Improve incineration.
Puffing	Overpressure inside furnace, possibility of outside contamination.	Design problem. Provide pressure relief valve to stack or relieve overloading.

TABLE A 7-3 General Maintenance and Troubleshooting Air Pollution Control Equipment

Equipment	Indicators	Problems	Recommended Maintenance and Troubleshooting
Quencher	Erratic outlet temp.	• Partially plugged nozzles • High variation incinerator feed moisture • Low gas flow rate (<30 ft/sec) • Water droplets impinging on thermocouple	• Inspect and replace plugged nozzles • Control moisture feed to incinerator • Increase gas flow rate to design range • Relocate thermocouple, replace defective nozzles
	Consistently high outlet temperature	• Plugged nozzles • Lower water flow rate and high temperature • Excessive gas velocity (>50 ft/sec)	• Inspect and replace plugged nozzles • Calibrate water flowmeter to adjust for evaporation loss • Reduce gas flow rate
Venturi scrubber	Erratic pressure differential	• Plugged nozzles • Erosion • Corrosion • Adjustable throat diameter is too wide	• Inspect headers, flanges, and nozzles • Reduce throat diameter and adjust liquid flow rate • Inspect throat regularly for deposits and wear
Absorption scrubber	Surging pressure differential (>10%)	• Face velocity in excess of 12 ft/sec • Plugged tray sections • Nonuniform scrubber liquor distribution • Leaking seals • Localized plugging of packing • Hole in the packing • Flooding	• Inspect spray nozzles, water flow rate weir boxes, and downcomers for proper operation and seals. Inspect packing; adjust caustic concentration to 15-20 percent • Decrease liquid flow rate • Check for plugging of packing
Fabric filter (baghouse)	Excessive pressure differential	• Excessive gas flow rate • Bag blinding (high dust loadings) • Leaking air lock or dampers • Faulty cleaning mechanism • Excessive dust accumulation in clean side of bags	• Reduce gas flowrate; check bleed air • Inspect cleaning mechanism; replace bags • Check proper temperature of gas to prevent condensation • Inspect for proper removal of collected ash from hoppers

TABLE A 7-4 Recommended Inspection and Maintenance Frequency

	I&M Frequency				
	Operation and Monitoring equipment			Emergency systems	
Equipment/parameters	Calibration	Inspection	Service	Alarms	waste cutoffs
Incinerator equipment	--	Daily	(1)	--	--
Waste feed/fuel systems	(2)	Daily	(1)	Weekly	Weekly
O and CO Monitors	Weekly	Continuous	(1)	Weekly	Weekly
Gas flow monitors:					
• Direct gas velocity	Weekly	Continuous	(1)	Weekly	Weekly
• Indirect fan amps	6 months	Continuous	--	Weekly	Weekly
Other incinerator monitoring equipment (flame scanners, air blowers, etc.)	--	Daily	(1)	Weekly	Weekly
APC	--	Weekly	(1)	--	--
APC support systems	--	Daily	(1)	Weekly	Weekly
APC performance instrumentation	Weekly	Daily	(1)	Weekly	Weekly

(1) Equipment manufacturer recommendation.
(2) Equipment manufacturer recommendation or no less than monthly.

Source: Acurex 1986
Frankel 1987c

TABLE A 7-5 Operating Parameters for HEPA Filters

	Range		Comment
Temperature	250°F maximum	-	particle board frame and rubber base adhesive
	500°F maximum	-	steel frame and silicon adhesive
	1000°F maximum	-	steel frame and glass packing seal
Flow rate	4200-160,000 ft^3/hr		
Pressure drop	1.0" H_2O	-	clean pressure drop at rated flow
	2.0" H_2O	-	particulate loaded pressure drop
Humidity	0-95%	-	condensation should be avoided
Particulate loading	up to 4.5 lb	-	depends on particle size, humidity, and surface area of filter
Efficiency	99.97%	-	as tested with 0.3 um DOP aerosol
Corrosive gases	Up to several percent of NO_x, HNO_3, and HF in gas stream	-	acid-resistant fibers (Nomex or Kerler), separators, and sealants are used

TABLE A 7-6 Off-Gas Cleaning System Operating Problems

Source of Problem	Consequence of Problem	Preventive Maintenance Action
Humidity	Clogging of filter (HEPA).	Reheat or add heater.
Temperature below the dewpoint of inorganic acids	Corrosion. Clogging (condensation of acids and tars).	Reheat if scrubber is used or keep temperature between 175-190°F. Remove acid gases.
	H-3 (Tritium).	Special development needed.
	C-14.	Same as above. Problem not likely.
	Cs, Ru, Zn.	Cooling before filtration to <480°F; HEPA filter recommended.
High release of acid	HCl, NO_x, SO_x, and HF P_xO_y.	Scrubbing needed. Cannot be treated as gas; must be treated in the process itself.
High content of HC and solid burnable particles in the offgas	Risk of fire in filter system.	Improvement of the incineration process is needed or installation of spark catcher.
Low decontamination factor (DF)	Personnel exposure	For better DF, improve the incinerator process. Install easy handling systems for maintenance and operation.
Mixing chamber	Increasing of off-gas mass.	Increasing size of equipment is necessary.
Quencher	Higher water content in the off-gas which gives higher corrosion risk.	Special feeding system is needed to control cooling rate.
Heat exchangers	Plugging of the tubes giving high pressure drop and/or reduced heat transfer coefficient.	Periodic cleaning is necessary.
	Corrosion.	Material and design problem.
Build-up on precoated high temperature filters	Filter life. Secondary waste.	More efficient secondary combustion.
Bag filter	Risk of fire and holes. Secondary waste or formation of HF if incinerated.	High efficiency of filtration for particles >3 microns.

EXHIBIT 1

Combustible Mixed Waste volumes in storage as of April 1990[a]

Facility	Combustible (m^3) [b][d] LLW	Combustible (m^3) [b][d] TRU	Combustible Non-combustible Mix (m^3) [c][d] LLW	Combustible Non-combustible Mix (m^3) [c][d] TRU
Los Alamos National Laboratory	12.5		4.0	
Lovelace Inhalation Toxicology	1.1			
Mound Plant	16.3			
Pantex	3.6			
Argonne National Laboratory - East	12.5	37.5	0.1	0.2
Argonne National Laboratory - West	0.6		3.8	0.1
Brookhaven National Laboratory	3.3			
Grand Junction Project Office	0.1			
Idaho National Engineering Laboratory	7281.7	9622.0	2844.7	1549.0
Colonie Interim Storage Site	2.1		0.6	
Fernald	5.0		19.0	
Oak Ridge National Laboratory	12.4			680.0
Paducah Gaseous Diffusion Plant	10.6	1.7		
Portsmouth Gaseous Diffusion Plant	9.8			
Weldon Spring Remedial Action Project	37.5		0.4	
Bettis Atomic Power Laboratory	0.3			
Naval Reactors Facility	0.2			
Hanford Site	106.4	95.6	22.0	22.5
Rocky Flats Plant	112.1	97.3		
Santa Susana Field Laboratory	2.6			
Lawrence Berkeley Laboratory			1.9	
Savannah River Site	3.2		3967.1	3043.0

(a) Obtained from DOE/EM-32, 2/19/91

(b) Low level waste (LLW) and transuranic waste (TRU) radioactive mixed waste matrices containing greater than 90% combustible material

(c) Low level waste (LLW) and transuranic waste (TRU) radioactive mixed waste matrices containing at least 10% volume of both combustible and noncombustible materials

(d) Does not include waste quantities subject to solvent Land Disposal Restriction rules

EXHIBIT 2

BARNWELL LOW-LEVEL RADIOACTIVE WASTE MANAGEMENT FACILITY RATE SCHEDULE

All radwaste material shall be packaged in accordance with Department of Transportation and Nuclear Regulatory Commission Regulations in Title 49 and Title 10 of the Code of Federal Regulations, Chem-Nuclear's Nuclear Regulatory Commission and South Carolina Radioactive Material Licenses, Chem-Nuclear's Barnwell Site Disposal Criteria, and amendments thereto.

1. BASE DISPOSAL CHARGES: (Not including Surcharges, Barnwell County Business License Tax, and Cask Handling Fee)

A. Standard Waste	$36.87/ft^3
B. Biological Waste	$38.52/ft^3
C. Special Nuclear Material (SNM)	$36.87/ft^3 plus $4.75 per Gram SNM

None: Minimum charge per shipment, excluding Surcharges and specific other charges is $800.00.

2. SURCHARGES:

A. Weight Surcharges (Crane Loads Only)

Weight of Container	Surcharge Per Container
0 - 1,000 lbs.	No Surcharge
1,001 - 5,000 lbs.	$ 430.00
5,001 - 10,000 lbs.	$ 760.00
10,001 - 20,000 lbs.	$1,070.00
20,001 - 30,000 lbs.	$1,390.00
30,001 - 40,000 lbs.	$2,030.00
40,001 - 50,000 lbs.	$2,670.00
greater than 50,000 lbs.	By Special Request

B. Curie Surcharges for Shielded Shipment:

Curie Content Per Shipment	Surcharge Per Shipment
0 - 5	$ 2,650.00
> 5 - 15	$ 2,990.00
> 15 - 25	$ 3,980.00
> 25 - 50	$ 5,990.00
> 50 - 75	$ 7,320.00
> 75 - 100	$ 9,910.00
> 100 - 150	$11,870.00
> 150 - 250	$15,900.00
> 250 - 500	$19,900.00
> 500 - 1,000	$23,900.00
> 1,000 - 5,000	$31,800.00
> 5,000	By Special Request

Effective April 1, 1989
(4537g)

Barnwell Rate Schedule
Page Two

C. Curie Surcharges for Non-Shielded Shipments Containing Tritium and Carbon 14:

Curie Content Per Shipment	Surcharge Per Shipment
0 - 100	No Surcharge
Greater than 100	By Special Request

D. Class B/C Waste Polyethylene High Integrity Container Surcharge

Type of HIC	Surcharge Per HIC
(1) Large liners with maximum dimension of 82" diameter and 79" height	$4,700.00
(2) Overpacks with maximum dimension of 33" diameter and 79" height	$1,570.00
(3) 55-gallon drum size with maximum dimension of 25.5" diameter and 36" height	$400.00
(4) Poly HICs which do not conform to one of the above three categories require prior approval.	Upon Request

E. Special Handling Surcharge may apply on unusually large or bulky containers. These types of containers are acceptable upon approval of prior request.

3. OTHER CHARGES

A. Cask Handling Fee — $1,050.00 per cask, minium

B. Taxes and Special Funds

1. Extended Care Fund — $2.80 per ft^3

2. South Carolina Low-Level Radioactive Waste Disposal Tax — $6.00 per ft^3

3. Southeast Regional Compact Fee — $.66 per ft^3

4. A 2.4% surcharge is added to each bill to cover Barnwell County Business License Taxes.

NOTE: ITEMS 3.B. 1, 2, AND 3 ARE INCLUDED IN ITEM 1, BASE DISPOSAL CHARGES.

Effective April 1, 1989
(4537g)

EXHIBIT 3

Half Lives of Selected Radionuclides

Nuclide	Half Life	Radiation Emitted	Principle Means of Production
H-3	12.3y	beta	Fission; Li-6 (n,∂)
C-14	5730 y	beta	N-14 (n,p)
P-32	14.28 d	beta	P-31 (n, gamma)
S-35	87.39 d	beta	S-34 (n, gamma)
Cr-51	27.70 d	electron capture	Cr-50 (n, gamma)
Mn-54	312.20 d	electron capture	Fe-56 (d, alpha)
Fe-55	2.68 y	electron capture	Fe-54 (n, gamma)
Fe-59	44.56 d	beta	Fe-58 (n, gamma)
Co-60	5.27 y	beta	Co-59 (n, gamma)
Ni-63	100.1 y	beta	Ni-62 (n, gamma)
Zn-65	244.0 d	electron capture	Zn-64 (n, gamma)
Se-75	118.45 d	electron capture	Se-74 (n, gamma)
Sr-90	28.82 y	beta	Fission
Zr-95	63.98 d	beta	Zr-94 (n, gamma)
Nb-95	34.97 d	beta	Daughter Zr-95
Tc-99	2.12×10^5 y	beta	Fission, Mo-98 (n, gamma)
Mo-99	66.02 h	beta	Mo-98 (n, gamma)
I-125	60.25 d	electron capture	Sb-123 (alpha, 2n); daughter Xe-125
I-129	1.17×10^7 y	beta, gamma	Fission
I-131	8.04 d	beta	Fission
Cs-134	2.06 y	beta	Cs-133 (n, gamma)
Cs-137	30.17 y	beta	Fission
Ce-144	284.5 d	beta	Fission
Pb-210	22.26 y	beta	Descendant Ra-226
Po-210	138.37 d	alpha	Daughter Bi-210
U-234	2.446×10^5 y	alpha	Daughter Pu-238
U-235	7.038×10^8 y	alpha	Natural source
U-238	4.468×10^9 y	alpha	Natural source
Np-237	2.14×10^6 y	alpha, beta gamma	U-238 (n,2n) U-237 (beta)
Pu-238	86.4 y	alpha, gamma	Np-237 (n, gamma) Np-238 (beta), daughter Cm-242
Pu-239	2.41×10^4 y	alpha, gamma	U-238 (n, gamma) U-239 (beta),
Pu-240	6,580 y	alpha, gamma	Np-239 (beta)
Pu-241	14.3 y	alpha, beta	Multiple n-capture
Am-241	432 y	alpha, gamma	Multiple n-capture Daughter Pu-241

*U.S. GOVERNMENT PRINTING OFFICE: 1991--517-003/47010

TECHNICAL REPORT DATA
(Please read Instructions on the reverse before completing)

1. REPORT NO. EPA 520/1-91-010-1	2.	3. RECIPIENT'S ACCESSION NO.
4. TITLE AND SUBTITLE Radioactive and Mixed Waste Incineration Background Information Document: Volume I - Technology		5. REPORT DATE May, 1991
		6. PERFORMING ORGANIZATION CODE
7. AUTHOR(S) Office of Radiation Programs and Center for Technology Control		8. PERFORMING ORGANIZATION REPORT NO.
9. PERFORMING ORGANIZATION NAME AND ADDRESS Environmental Protection Agency Office of Radiation Programs (ANR-461) 401 M St., S.W. Washington, D.C. 20460		10. PROGRAM ELEMENT NO.
		11. CONTRACT/GRANT NO.
12. SPONSORING AGENCY NAME AND ADDRESS USEPA Office of Air and Radiation and Office of Research and Development Washington, D.C. 20460		13. TYPE OF REPORT AND PERIOD COVERED Final
		14. SPONSORING AGENCY CODE

15. SUPPLEMENTARY NOTES

16. ABSTRACT

This background document, consisting of Volume I - Technology and Volume II - Risks of Radiation Exposure, provides a broad look at technology issues surrounding the incineration of radioactive and mixed wastes. It is intended to highlight major consideration and to provide direction that would enable the reader who must deal in depth with incineration to focus on and seek specific information on concerns appropriate to a particular situation. It is not a comprehensive text on incinerator design, use, or regulation. The information presented in Volume I was gathered by telephone contacts with operators of existing incinerators, site visits, agency contacts, and literature searches. The contents present a distillation of material deemed to be most relevant; it includes only a small fraction of the total amount of information collected. Wherever possible, actual operating data have been used to illustrate principles, however, inconsistencies in operational data acquisition have resulted in very limited availability of data that can be used for general assessment or purposes of comparison. Even though the existing data base on operation and resulting emissions and ash residues from radioactive waste incinerators is still quite small, it has been demonstrated that incineration can achieve significant volume reductions for radioactive waste.

17. KEY WORDS AND DOCUMENT ANALYSIS

a. DESCRIPTORS	b. IDENTIFIERS/OPEN ENDED TERMS	c. COSATI Field/Group
Radwaste Treatment Radwate Incineration Mixed Waste Incineration Radwaste or Mixed Waste Reduction Thermal Destruction Volume Reduction		

18. DISTRIBUTION STATEMENT Release Unlimited	19. SECURITY CLASS *(This Report)* Unclassified	21. NO. OF PAGES
	20. SECURITY CLASS *(This page)*	22. PRICE

EPA Form 2220-1 (Rev. 4-77) PREVIOUS EDITION IS OBSOLETE