PB99-964104
EPA541-R99-077
1999

EPA Superfund
Record of Decision:

Jennison Wright Corporation Inc. Site
Granite City, IL
9/29/1999

Jennison Wright Superfund Site, IL

DECLARATION FOR THE RECORD OF DECISION

SITE NAME AND LOCATION

Jennison Wright Superfund Site
Granite City, Illinois

STATEMENT OF BASIS AND PURPOSE

This decision document represents the selected remedial action for the Jennison Wright Superfund Site developed in accordance with the Comprehensive Environmental Response, Compensation and liability Act of 1980 (CERCLA), as amended by the Superfund Amendments and Reauthorization Act of 1986 (SARA) and, to the extent practicable, the National Oil and Hazardous Substances Pollution Contingency Plan (NCP).

This decision is based upon the contents of the administrative record for the Jennison Wright Superfund Site.

The United States Environmental Protection Agency (USEPA), Region V supports the selected remedy on the Jennison Wright Superfund site.

ASSESSMENT OF THE SITE

The response action selected in the Record of Decision is necessary to protect the public health or welfare or the environment from actual or threatened releases of hazardous substances into the environment.

DESCRIPTION OF SELECTED REMEDY

The selected remedy is comprised of treatment options in five operable units. This remedy comprises the overall remedy for the entire site.

- For site wastes consisting of the drip track residue and the oils found on-site, the selected alternative is to remove the waste and have it disposed at a hazardous waste facility.

- For site soils, a landfarm will be constructed in the northeast portion of the site .

- For NAPL removal, hot water and steam flushing is the selected alternative over surfactant flushing because it is a more proven technology.

- For the more highly contaminated groundwater plumes, the preferred alternative is enhanced in situ biological treatment using Oxygen Release Compounds (ORC) and air sparging rather than natural attenuation and ex situ biological treatment. Natural attenuation is the selected alternative for the other areas of the site where the groundwater contamination is at a much lower level.

- The buildings and other structures on the site will be razed and the asbestos-containing materials inside will be abated.

- The selected alternative for the "Miscellaneous Items" category is to remove the remaining miscellaneous items (debris piles, storage tanks, abandoned steel trams and several sumps and pits) that litter the site.

STATUTORY DETERMINATIONS

It is the considered opinion of the Illinois Environmental Protection Agency (Illinois EPA) in consultation with USEPA Region V that the selected remedy is protective of human health and the environment, attains Federal and State requirements that are applicable or relevant and appropriate for this remedial action (or invokes an appropriate waiver), is cost-effective, and utilizes permanent solutions and alternative treatment technologies (or resource recovery) to the maximum extent practicable and satisfies the statutory preference for remedies that employ treatment that reduces toxicity, mobility, or volume as a principal element. Because this remedy will result in hazardous substances remaining on-site above levels that will allow for unlimited use and unrestricted exposure, a statutory review will be conducted within five years after initiation of remedial action to ensure that the remedy is, or will be protective of human health and the environment.

Wm. E. Muno

William E. Muno, Director
Superfund Division
USEPA - Region V

9/29/99
Date

Thomas V. Skinner

Thomas V. Skinner, Director
Illinois EPA

9.28.99
Date

DECISION SUMMARY
FOR
THE RECORD OF DECISION
JENNISON WRIGHT SUPERFUND SITE

SITE NAME, LOCATION, AND DESCRIPTION

The Jennison-Wright Corporation site is an abandoned railroad tie-treating facility and is comprised of approximately 20 acres of land at 900 West 22nd Street within the corporate boundaries of Granite City, Madison County, Illinois. The facility is situated in a mixed industrial/residential neighborhood and is bordered by the Norfolk-Southern Railroad lines to the east and south, residential areas to the west and property occupied by the Illinois American Water Company, a residential area and 23rd Street to the north.

The site is being managed by the Illinois EPA as the lead agency with the USEPA serving as the support agency. Remedial actions are being pursued using federal Superfund trust fund monies as the primary source of funding.

SITE HISTORY AND ENFORCEMENT ACTIVITIES

Operations at the facility began prior to 1921 and continued until 1989 with three separate companies operating at the site: Midland Creosoteing Company (prior to 1921-1940), The Jennison-Wright Corporation (1940-1981) and 2-B-J.W., Inc (1981-1989), authorized to do business as Jennison-Wright Corporation. Jennison-Wright Corporation filed for Chapter 11 Bankruptcy in November 1989, with an auction held in 1990 to sell the remaining equipment and materials. The site has remained vacant since 1990 except for the occasional trespasser or scavenger and periodic visits by Illinois EPA personnel.

The Jennison-Wright Corporation site is a triangular-shaped facility that is bisected by 22nd Street, creating a north and south portion. The area north of 22nd Street treated wood products (railroad ties and wood block flooring) with *pentachlorophenol (PCP)*, *creosote* and *zinc naphthenate*. Creosote was used for treating wood products prior to 1921 to 1989. Pentachlorophenol was used from 1974 to 1985 and zinc naphthenate was used from 1985 to 1989.

Jennite (an asphalt sealer product composed of coal tar, pitch, clay, and water) was manufactured in the southeastern corner of the facility. The process began in the early 1960s and continued until the summer of 1986 when Jennison-Wright sold the Jennite process to Neyra Industries. Neyra

Industries leased the portion of the facility used by Jennison-Wright for the sealer, and continued manufacturing the asphalt sealer until the bankruptcy in 1989.

In the summer of 1992, the Illinois EPA used trust fund monies from the bankruptcy sale to initiate a stabilization effort on this site to alleviate the spread of contamination. The east boundary of the south portion of the site contains the "Jennite pit" (an on-site disposal pit where creosote wastes were dumped) which had become semi-liquid and begun to migrate off-site.

To temporarily alleviate this problem, the overflowing material was removed and placed in three cut-off tanks. A makeshift clay cap was constructed using materials on site to shore up the boundaries of the Jennite pit. Approximately 175 drums of various known and unknown materials were found on-site including 15 drums of creosote contaminated asbestos insulation. These drums were stored on-site in an existing structure.

In November, 1994, Reidel Environmental Services was mobilized for a planned removal action.

Per the EE/CA, the completed actions are as follows:

- Installation of a six-foot chain link fence around the area of stockpiled soil and drainage area at the northeast corner of the site;
- Excavation and disposal of soils around the upright storage tanks, railroad cars;
- Removal of aqueous waste from the various storage vessels, treatment by oil/water separation, and off-site disposal at a water treatment plant;
- Removal and disposal of creosote waste material from the storage vessels;
- Decontamination/dismantling of the storage vessels;
- Characterization of the material within the drums inside the Transite building and proper disposal;
- Installation of a protective geomembrane and clay cap over the "Jennite pit".
- Removal of the contaminated soil in the three cutoff tanks in the south portion of the site and dismantling of the tanks.

Subsequent to the removal action, the site was finalized on the National Priorities List on June 16, 1996.

HIGHLIGHTS OF COMMUNITY PARTICIPATION

The Illinois EPA has been responsible for conducting a community relations program for the site. Concern about the site has remained somewhat low, with public concern over the presence of weeds and debris on site rather than the presence of chemical contaminantsLow public concern is also due to the site's remote location and the fact that on-site groundwater contamination has shown no apparent affect on nearby residential and agricultural wells. Some of the local residents were aware of the environmental problems associated with the site prior to the 1994 removal action, but awareness of the potential environmental and public health threats posed by the site is primarily due to regulatory activities and investigations carried out by the Illinois EPA.

The community relations program at the Jennison-Wright Superfund Site was designed to allow the nearby communities to learn about and participate in the Superfund remedial process, without disrupting the communities' confidence that the site posed no new or immediate hazards. The community relations plan focused on:

- Informing nearby residents and other interested citizens about the Superfund process, project plans, progress, and problems;
- Ensuring that all local, state, and federal officials who have interest in the site are kept informed of the project plans, progress, and problems;
- Identifying additional issues, changing concerns, and misconceptions of the affected community;
- Providing accurate and timely information to the news media;
- Preventing the development of unrealistic expectations, especially regarding the timing of actions at the site an possible local employment effects of the project;
- Providing timely and accurate responses to inquiries regarding the project;
- Setting up the local repository and administrative record for project documents and reports;
- Noticing the nearby residents and potentially affected persons of the proposed plan along with a minimum thirty-day comment period; and
- Conducting a public hearing in accordance with section 117(a)(2) of CERCLA.

The Illinois EPA has issued four separate fact sheets to the public addressing the site regarding site contaminants and impending removal/remedial actions. The Engineering Evaluation/Cost Analysis (EE/CA) and Proposed Plan were released to the public in July 1999. These two documents were made available to the public in both the administrative record and an information repository maintained at the Granite City Public Library and at the Illinois EPA headquarters in Springfield, Illinois. The notice of availability for these and other documents was published in the Granite City

Press Journal on July 18, 1999. A public comment period was held from July 30, 1999 through August 29, 1999 to encourage public participation in the remedy selection process. In addition, a public hearing was held on August 19, 1999. At this meeting, representatives from the Illinois EPA answered questions about problems at the site and the remedial alternatives under consideration. A response to the comments received during this comment period is included in the Responsiveness Summary, which is part of this Record of Decision. This decision document presents the selected remedial action for the Jennison Wright Superfund Site, in Granite City, Illinois, chosen in accordance with CERCLA, as amended by SARA and, to the extent practicable, the National Contingency Plan. The decision for this site is based on the administrative record.

SCOPE AND ROLE OF RESPONSE ACTION

This ROD addresses the overall site remedy for all operable units at the Jennison Wright Superfund Site. As with many Superfund sites, the problems at the Jennison Wright Superfund Site are complex and interrelated. As a result, Illinois EPA has divided the work into different manageable Operable Units (OUs). These are:

OU 1 **Soils and Wastes:** addresses the soils that have been contaminated by past site operations and the wastes that those operations left in place when the site went bankrupt.

OU 2 **Non-Aqueous Phase Liquids (NAPLs):** addresses the presence of NAPLs, which have been found in the northeast corner of the south section of the site.

OU 3 **Groundwater:** addresses the contaminated groundwater which is located throughout the site. The most significant areas of contamination are regions of the NE corner of the north portion of the site (Area H), the NE corner of the south portion of the site, the Jennite Pit area, south of the old silos, and the immediate vicinity of the former Pentachlorophenol (PCP) treatment process building.

OU 4 **Buildings:** addresses the variety of different structures and their remnants which remain on-site. There are five buildings and two silos on-site.

OU 5 **Miscellaneous Items:** addresses the remaining miscellaneous items that consist of two underground storage tanks, two above ground storage tanks, an oil water separator, liquids and sediments in an on-site basin, the collapsed pole barn, several sumps and pits, scattered debris piles, and steel tram rails.

SITE CHARACTERISTICS

Site Location

The Jennison-Wright Corporation site is made up of approximately 20 acres of land at 900 West 22nd Street within the corporate boundaries of Granite City, Madison County, Illinois. The facility is bordered by the Norfolk-Southern Railroad lines to the east and south, residential areas to the west and property occupied by the Illinois American Water Company, a residential area, and 23rd Street to the north. The site is fenced but evidence of trespassing (i.e., trash and graffiti) has been observed in buildings at the facility.

The site topography is relatively flat, with surface runoff toward the northeast from areas north of 22nd Street. Runoff appears to be contained at the site in areas south of 22nd Street. Bare soil areas exist at the site, but more than half of the site is covered by buildings, grass, brush, or gravel. Five buildings, two silos, and several concrete sumps, pits, and debris piles are present on the site. In addition, there are two small underground storage tanks and one unlined sludge pit (Jennite Pit). Although a number of private and/or industrial wells have been identified in the area, domestic water for the Granite City area is obtained from the Mississippi River.

Past site practices have resulted in leakage/spillage of chemicals to surface soils, or, in the case of the Jennite pit, direct deposition of wastes into the soil. Once released to the soil, contaminations migrated to subsurface soils and groundwater. Contamination detected at the site includes Volatile Organic Compounds (VOCs), Semi-Volatile Organic Compunds (SVOCs), pesticides, and dioxins/furans. In pursuit of information regarding this contamination, Illinois EPA collected 81 gridded surface soil samples, 15 biased surface soil samples, 72 subsurface soil samples, 4 sediment samples, and a total of 58 groundwater samples in the shallow (20 feet BGS), intermediate (45 feet BGS), and deep (~100 feet BGS) ranges. Contamination from site operations was found in both surface and subsurface samples with varying degrees of concentration. Contamination was also found in the groundwater in all three depth ranges with a significant NAPL source in the northeast corner of the south portion of the site.

Shallow groundwater flow at the site is predominantly to the south with a western component of groundwater flow in the southern half of the site. The intermediate and deep groundwater flow show primarily a southerly component. Hydraulic gradients at the site are small and range from 0.0023 to 0.00064 ft/ft in the shallow portion of the aquifer and range from 0.00072 and 0.00081 ft/ft.

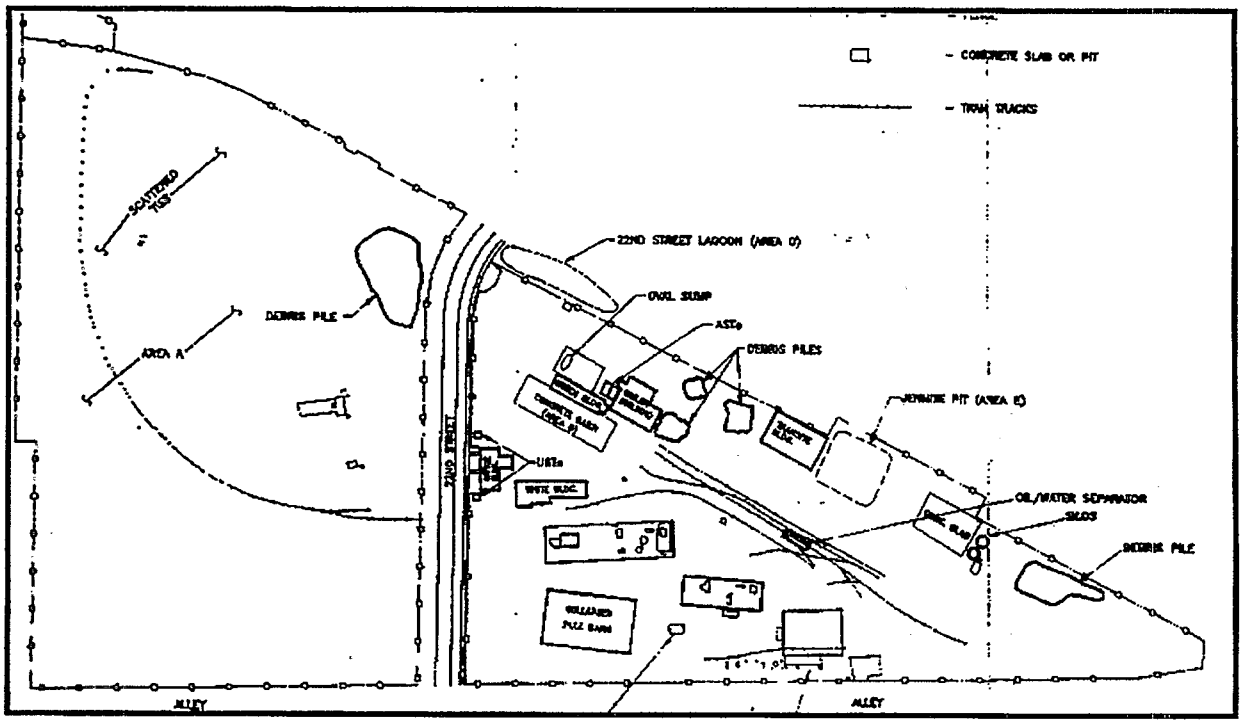

Site Map

CURRENT AND POTENTIAL FUTURE LAND AND RESOURCE USE

In order to adequately assess the risks to human health and the environment, current and potential future land uses need to be anticipated.

Currently, there is no on-site use of the property. The facility is situated in a mixed industrial/residential neighborhood and is bordered by the Norfolk-Southern Railroad lines to the east and south, residential areas to the west and property occupied by the Illinois American Water Company, a residential area and 23rd Street to the north.

The anticipated future use of the property is assumed to be commercial/industrial. Factors contributing to this assumption include:

- Records indicating the use of the property has been commercial/industrial for many years,
- Proximity of the adjacent railroad spur makes the property much more attractive to industrial use rather than residential, and
- Granite City has expressed an interest in redeveloping the site as an industrial complex once the remedial efforts have been completed.

It is anticipated that deed restrictions will be implemented to prohibit residential use of the site.

The site topography is such that surface water is non-existent except for the occasional ponding of water. Groundwater, though abundant, is not considered to be practical as a drinking water source due to the prevalence and proximity of the local municipal water supply system.

SUMMARY OF SITE RISKS

The response action selected in this Record of Decision is necessary to protect the public health or welfare or the environment from actual or threatened releases of hazardous substances into the environment. Some remedial action is therefore warranted.

During the EE/CA, a risk assessment was performed to estimate the health or environmental problems that could result if the proposed actions were not conducted to clean up the site. The analysis performed is commonly called a streamlined risk assessment or, more simply, the risk assessment. The specific purpose of the risk assessment is to evaluate potential risks to humans and the environment as a result of exposure to contaminants present in soil and groundwater at the Jennison-Wright site.

Several organic compounds were identified as Contaminants of Potential Concern (COPCs) in groundwater, but not in soil either because they were not detected in soil at the site, or because the results of toxicity screening indicated that the chemical concentrations detected in soil would not contribute significantly to the overall estimated risk at the site. Arsenic was retained as a COPC in groundwater, but not in soil, based on the comparison to background levels (which indicate that the arsenic concentrations in soil at the site are similar to background levels) and on site historical information which does not indicate that arsenic was ever used at the site. Due to the lack of background data for lead, and because lead levels in two of the surface soil samples exceeded the screening level, lead was retained as a COPC in surface soil. A summary of the chemicals selected as COPCs for soil and groundwater are presented in the table below.

CHEMICALS OF POTENTIAL CONCERN IN SOIL AND GROUNDWATER
STREAMLINED HUMAN HEALTH RISK EVALUATION
JENNISON-WRIGHT SITE
GRANITE CITY, ILLINOIS

Chemical	Medium		
	Surface Soil	Subsurface Soil	Groundwater
Acenaphthene	X	X	X
Arsenic			X

CHEMICALS OF POTENTIAL CONCERN IN SOIL AND GROUNDWATER
STREAMLINED HUMAN HEALTH RISK EVALUATION
JENNISON-WRIGHT SITE
GRANITE CITY, ILLINOIS

Chemical	Medium		
	Surface Soil	Subsurface Soil	Groundwater
Benzene		X	X
Benzo(a)anthracene	X		
Benzo(a)pyrene	X	X	
Benzo(b)fluoranthene	X	X	X
Benzo(k)fluoranthene	X	X	X
Beryllium	X		
Carbazole	X	X	
Chloroform			X
Chromium	X		
Chrysene	X	X	X
Di(2-ethylhexyl)phthalate			X
Dibenzo(a,h)anthracene	X	X	
1,2-Dichloroethane			X
2,4-Dimethylphenol		X	X
Ethylbenzene			X
alpha-Hexachlorocyclohexane	X		X
Indeno(1,2,3-cd)pyrene	X	X	
Lead	X		X
Manganese	X		X
Methylene chloride			X
2-Methylphenol			X
Naphthalene	X	X	X
Pentachlorophenol	X	X	X
Phenol			X
2,3,7,8 TCDD Equivalents[a]	X		

CHEMICALS OF POTENTIAL CONCERN IN SOIL AND GROUNDWATER STREAMLINED HUMAN HEALTH RISK EVALUATION JENNISON-WRIGHT SITE GRANITE CITY, ILLINOIS			
	Medium		
Chemical	Surface Soil	Subsurface Soil	Groundwater
Thallium			X
Toluene			X
Trichloroethene			X

HUMAN HEALTH RISKS

Section 1: Identification of Chemicals of Concern

The Human Health Risk Evaluation estimates what risks the site poses if no action were taken. It provides the basis for taking action and identifies the contaminants and exposure pathways that need to be addressed by the remedial action. This section of the ROD summarizes the results of the Streamlined Risk Assessment for this site.

The general conclusion of the human health risk assessment conducted for the Jennison-Wright site is that the site poses unacceptable risks to human health in both current and hypothetical future use scenarios. Some remedial action is therefore warranted.

There are a number of major factors causing the unacceptable risks for humans including:

- The presence of dioxins/dibenzofurans and carcinogenic polynuclear aromatic hydrocarbons (PAHs) in site surface soils;
- The presence of several PAHs and PCP in the groundwater at several locations around the site; and
- The presence of benzene and naphthalene in subsurface soils.

Contaminant levels in different media varied widely both between media and within the media for a number of the COPC's. Table 3-3 from the EE/CA, as reproduced below illustrates the exposure point concentrations of each COPC.

Table 3-3

EXPOSURE POINT CONCENTRATIONS FOR CHEMICALS OF POTENTIAL CONCERN
JENNISON-WRIGHT SITE, GRANITE CITY, ILLINOIS

Exposure Point Concentration Set	Location	Chemical	Units	Number of Samples	Number of Detects	Expo. Point Conc.	Expo. Point Conc. Source
Surface Soil	Onsite	Acenaphthene	mg/kg	92	44	4.86E+02	UCL -
		alpha-BHC	mg/kg	27	5	9.24E-03	UCL -
		Benzo[a]anthracene	mg/kg	92	81	3.62E+02	UCL -
		Benzo[a]pyrene	mg/kg	92	89	1.48E+02	UCL -
		Benzo[b]fluoranthene	mg/kg	92	89	1.70E+02	UCL -
		Benzo[k]fluoranthene	mg/kg	92	87	1.61E+02	UCL -
		Beryllium	mg/kg	27	26	2.71E+00	UCL -
		Carbazole	mg/kg	27	24	4.47E+03	UCL -
		Chromium (III)	mg/kg	27	27	2.07E+02	UCL -
		Chromium (VI)	mg/kg	27	27	4.14E+01	UCL -
		Chrysene	mg/kg	92	87	4.09E+02	UCL -
		Dibenz[a,h]anthracene	mg/kg	92	63	2.72E+01	UCL -
		Indeno[1,2,3-cd]pyrene	mg/kg	92	86	6.05E+01	UCL -
		Manganese	mg/kg	27	27	6.63E+03	UCL -
		Naphthalene	mg/kg	92	23	1.21E+02	UCL -
		Pentachlorophenol	mg/kg	26	7	2.76E+02	UCL -
		TCDD-TEF	mg/kg	11	11	6.64E-02	Max Detected
Soil <10 ft	Onsite	Acenaphthene	mg/kg	130	53	3.58E+02	UCL - lognormal
		alpha-BHC	mg/kg	40	5	5.23E-03	UCL - lognormal
		Benzene	mg/kg	14	3	4.20E+00	Max Detected
		Benzo[a]anthracene	mg/kg	130	93	2.61E+02	UCL - lognormal
		Benzo[a]pyrene	mg/kg	130	100	1.08E+02	UCL - lognormal
		Benzo[b]fluoranthene	mg/kg	130	102	1.24E+02	UCL - lognormal
		Benzo[k]fluoranthene	mg/kg	130	97	1.15E+02	UCL - lognormal
		Beryllium	mg/kg	40	35	1.97E+00	UCL - lognormal
		Carbazole	mg/kg	48	26	3.53E+02	UCL - lognormal
		Chromium (III)	mg/kg	40	40	1.14E+02	UCL - lognormal
		Chromium (VI)	mg/kg	40	40	2.28E+01	UCL - lognormal
		Chrysene	mg/kg	130	100	2.94E+02	UCL - lognormal
		Dibenz[a,h]anthracene	mg/kg	130	69	1.99E+01	UCL - lognormal
		Indeno[1,2,3-cd]pyrene	mg/kg	130	98	4.41E+01	UCL - lognormal
		Manganese	mg/kg	40	40	4.78E+03	UCL - lognormal
		Naphthalene	mg/kg	130	37	1.36E+02	UCL - lognormal
		Pentachlorophenol	mg/kg	47	12	1.07E+02	UCL - lognormal
		TCDD-TEF	mg/kg	11	11	6.64E-02	Max Detected
Groundwater	22nd St. Lagoon	2,4-Dimethylphenol	mg/L	4	1	1.50E+01	Max Detected
		2-Methylphenol	mg/L	4	2	2.10E+01	Max Detected
		Acenaphthene	mg/L	5	4	4.60E-01	Max Detected
		Arsenic	mg/L	3	2	2.46E-02	Max Detected
		Benzene	mg/L	3	2	6.60E+00	Max Detected
		Benzo[a]anthracene	mg/L	5	2	1.90E-01	Max Detected

Source: Ecology and Environment, Inc. 1999

Key:

Max. detected	= Maximum detected value.
mg/kg	= Milligrams per kilogram or parts per million.
mg/L	= milligrams per liter or parts per million.
UCL - normal	= 95% upper confidence limit of the arithmetic average for normally distributed data.
UCL - lognormal	= 95% upper confidence limit of the arithmetic average for lognormally distributed data.

Source: Ecology and Environment, Inc., 1999.

Data Quality

Data analyses were performed using methods and QA/QC procedures set forth in Methods for the Chemical Analysis of Water and Wastes (EPA 1983) and Test Methods for Evaluating Solid Waste, Physical/Chemical Methods, SW-846, Third Edition, Update 2B (EPA 1995a). The 16 surface soil grid samples analyzed by Contract Laboratory Program (CLP) were evaluated using methods and QA/QC procedures specified by CLP. Data validation was performed in accordance with EPA's functional guidelines for evaluating organic and inorganic analyses. Only data approved for use by these procedures were used in the risk assessment.

Exposure Point Calculations (EPCs)

The EPCs for surface soil were based on the lower of the 95% upper confidence limit on the mean Upper Confidence Limit (UCL) and the maximum detected value from samples collected for CLP analysis. For the future site worker and construction worker scenarios, UCLs were calculated for the combined surface and subsurface soil data, based on the assumption that these receptors would be exposed to a mixture of these soils as a result of site redevelopment. Upon review of the groundwater data, four discrete areas of groundwater contamination were identified based on the processes that occurred in certain areas of the site. Consequently, the groundwater data was segratated based on the proximity of the wells to the four functional areas (22nd Street Lagoon, Area H, Jennite Pit, and the PCP process area), and then each area was evaluated separately. The lower of the UCL or the maximum detected value for each area was selected as the EPC for the particular chemical for each area. For air pathways, airborne concentrations of chemicals were estimated from surface and subsurface soil samples using standard mass flux calculations. EPCs calculated for the Jennison-Wright site are shown on Table 3-3 of the EE/CA.

Section 2: Exposure Assessment

Exposure scenarios were evaluated for a number of possible exposures and reflect the excess lifetime cancer risk if no cleanup activities are conducted. An industrial/commercial use of the property was assumed for purposes of projecting future risk due to the history of the site as an industrial complex. Figure 3-1 in the EE/CA displays a flow chart of the Conceptual Site Model used for the site and is reproduced below.

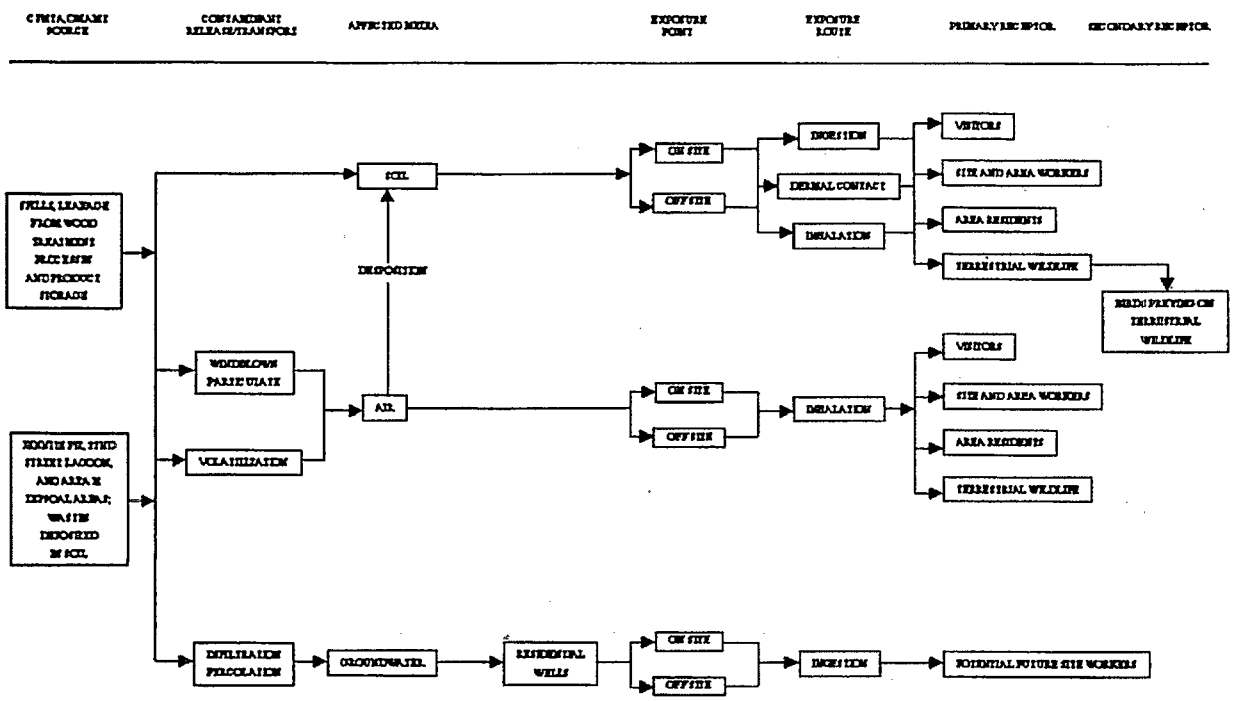

JENNISON-WRIGHT SRE CONCEPTUAL MODEL

Seven different exposure scenarios were considered in the Conceptual Site Model. A table representation of those scenarios and the calculated risks is presented below.

Conceptual Site Model	
Scenario	**Risk Level**
Scenario 1- Current Site Visitor (soil and air exposure)	$3.7X10^{-4}$
Scenario 2- Current Nearby Residents (air exposure)	$5.9X10^{-5}$
Scenario 3- Future Permanent Site Worker (soil and air exposure)	$3.8X10^{-3}$

Conceptual Site Model	
Scenario 4- Future Permanent Site Worker (groundwater ingestion)	$3.9X10^{-2}$
Scenario 5- Future Site Construction Worker (soil and air exposure)	$2.1X10^{-4}$
Scenario 6- Future Nearby Residents (chronic air exposure)	$1.0X10^{-4}$
Scenario 7- Future Nearby Residents (during construction)	$6.2X10^{-5}$

Section 3: Toxicity Assessment

The purpose of the toxicity assessment is to review toxicity and carcinogenicity data for the COPCs, and to provide an estimate of the relationship between the extent of exposure to these contaminants and the likelihood and/or severity of adverse effects. The toxicity assessment is accomplished in two steps: hazard identification and dose-response assessment.

The hazard identification is a qualitative description of the potential toxic effects of the COPC. The health effects summaries presented in Appendix I describe the toxic effects that have been observed in humans and/or animals following exposure to the COPCs identified at the Jennison Wright site.

Categorization of Chemicals as Carcinogens or Noncarcinogens

For the purpose of this risk evaluation, COPCs were classified into two groups: potential carcinogens and noncarcinogens. The risks posed by these two types of compounds are assessed differently because noncarcinogens generally exhibit a threshold dose, below which no adverse effects occur, while no such threshold has been proven to exist for most carcinogens.

As used here, the term "carcinogen" means any chemical for which there is sufficient evidence that exposure may result in continuing uncontrolled cell division (cancer) in humans and/or animals. Conversely, the term "noncarcinogen" means any chemical for which the carcinogenic evidence is negative or insufficient. These classifications are dynamic; chemicals may be reclassified any time additional evidence becomes available that shifts the weight-of-evidence one way or the other.

The following tables are reproduced directly from the EE/CA Streamlined Risk Assessment and represent the carcinogenic and non-carcinogenic risk information which is relevant to the contaminants of concern in both soil and groundwater. Because dermal route references doses (RfDs) and slope factors (SFs) are usually not available, oral route RfDs and SFs are commonly used to evaluate exposures to substances by both the oral and dermal routes. In accordance with Risk Assessment Guidelines (RAGS), when the RfD or SF is based on an administered dose, and the gastrointestinal absorption of the COPC is significantly less than 100%, the RfD or SF is adjusted to assess dermal risks using a gastrointestinal absorption factor (GIAF), which represents the oral absorption efficiency of the chemical.

Table 3-18

TOXICITY INDICES FOR CARCINOGENIC EFFECTS OF COPCs
JENNISON-WRIGHT SITE, GRANITE CITY, ILLINOIS

Chemical	Cancer Class	Exposure Route	Slope Factor $(mg/kg\text{-}day)^{-1}$	Target Organ	Tumor Type	Basis Species	Basis Exposure Route	Reference Source
Arsenic	A	Inhalation	1.5E+01	Lung	Lung Cancer	Human, male	Inhalation, occupational exposure	IRIS
		Oral	1.5E+00	Skin	Skin Cancer	Human, male	Drinking water	IRIS
Benzene	A	Inhalation	2.9E-02	Blood	Leukemia	Human	Inhalation, occupational exposure	IRIS
		Oral	2.9E-02	Blood	Leukemia	Human	Inhalation, occupational exposure	IRIS
Benzo[a]anthracene	B2	Inhalation	3.1E-01	—	—	—	—	Other EPA Docs.
		Oral	7.3E-01	—	—	—	—	NCEA
Benzo[a]pyrene	B2	Inhalation	3.1E+00	Respiratory tract	—	Hamster	Inhalation	IRIS
		Oral	7.3E+00	Forestomach	—	CFW and SWR/J Swill Mice	Oral, diet	IRIS
Benzo[b]fluoranthene	B2	Inhalation	3.1E-01	—	—	—	—	Other EPA Docs.
		Oral	7.3E-01	—	—	—	—	NCEA
Benzo[k]fluoranthene	B2	Inhalation	3.1E-02	—	—	—	—	Other EPA Docs.
		Oral	7.3E-02	—	—	—	—	NCEA
Beryllium	B2	Inhalation	8.4E+00	Lung	—	Human	Inhalation, occupational exposure	IRIS
		Oral	NA	—	—	—	—	Withdrawn

Table 3-18

TOXICITY INDICES FOR CARCINOGENIC EFFECTS OF COPCs
JENNISON-WRIGHT SITE, GRANITE CITY, ILLINOIS

Chemical	Cancer Class	Exposure Route	Slope Factor $(mg/kg\text{-}day)^{-1}$	Target Organ	Tumor Type	Basis Species	Basis Exposure Route	Reference Source
Carbazole	B2	Inhalation	2.0E-02	Liver	Tumors	Mouse	Diet	Oral SF
		Oral	2.0E-02	Liver	Tumors	Mouse	Diet	HEAST
Chloroform	B2	Inhalation	8.0E-02	Liver	Hepatocellular carcinoma	Mouse, B6C3F1, female	Gavage	IRIS
		Oral	6.1E-03	Kidney	All kidney tumors	Rat/Osborne-Mendel, male	Drinking water	IRIS
Chromium (VI)	A	Inhalation	4.2E+01	Lung	Lung cancer	Human	Inhalation, occupational exposure	IRIS
		Oral	NA	—	—	—	—	—
Chrysene	B2	Inhalation	3.1E-03	—	—	—	—	Other EPA Docs.
		Oral	7.3E-03	—	—	—	—	NCEA
Di(2-ethylhexyl)phthalate	B2	Inhalation	1.4E-02	—	—	—	—	Oral SF
		Oral	1.4E-02	Liver	Hepatocellular carcinoma and adenoma	Mouse/B6C3F1, male	Diet	IRIS
Dibenz[a,h]anthracene	B2	Inhalation	3.1E+00	—	—	—	—	Other EPA Docs.
		Oral	7.3E+00	—	—	—	—	NCEA
Dichloroethane, 1,2-	B2	Inhalation	9.1E-02	Circulatory system	—	Rat/Osborne-Mendel, male	Gavage	IRIS
		Oral	9.1E-02	Circulatory system	Hemangiosarcomas	Rat/Osborne-Mendel, male	Gavage	IRIS

Table 3-18

TOXICITY INDICES FOR CARCINOGENIC EFFECTS OF COPCs
JENNISON-WRIGHT SITE, GRANITE CITY, ILLINOIS

Chemical	Cancer Class	Exposure Route	Slope Factor $(mg/kg\text{-}day)^{-1}$	Target Organ	Tumor Type	Basis Species	Basis Exposure Route	Reference Source
Hexachlorocyclohexane, alpha-	B2	Inhalation	6.3E+00	Liver	Hepatic nodules and hepatocellular carcinomas	Mouse/dd, male	Diet	IRIS
		Oral	6.3E+00	Liver	Hepatic nodules and hepatocellular carcinomas	Mouse/dd, male	Diet	IRIS
Indeno[1,2,3-cd]pyrene	B2	Inhalation	3.1E-01	—	—	—	—	Other EPA Docs.
		Oral	7.3E-01	—	—	—	—	NCEA
Methylene chloride	B2	Inhalation	1.6E-03	Liver, lung	Combined adenomas and carcinomas	Mouse/B6C3F1, female	Inhalation	IRIS
		Oral	7.5E-03	Liver	Hepatocellular adenomas or carcinomas (NTP) and hepatocellular cancer and neoplastic nodules (NCA)	Mouse/B6C3F1 (female, NTP; male, NCA)	Inhalation (NTP); drinking water (NCA)	IRIS
Methylphenol, 2-	C	Inhalation	NA	—	—	—	—	—
		Oral	NA	—	—	—	—	—
Pentachlorophenol	B2	Inhalation	1.2E-01	Liver, cardiovascular system	Hepatocellular adenoma/carcinoma, pheochromocytoma/ malignant pheochromocytoma, hemangiosarcoma/ hemangioma	Mouse/B6C3F1, female	Diet	Oral SF

Table 3-18

TOXICITY INDICES FOR CARCINOGENIC EFFECTS OF COPCs
JENNISON-WRIGHT SITE, GRANITE CITY, ILLINOIS

Chemical	Cancer Class	Exposure Route	Slope Factor $(mg/kg\text{-}day)^{-1}$	Target Organ	Tumor Type	Basis Species	Basis Exposure Route	Reference Source
Pentachlorophenol	B2	Oral	1.2E-01	Liver, cardiovascular system	Hepatocellular adenoma/carcinoma, pheochromocytoma/ malignant pheochromocytoma, hemangiosarcoma/ hemangioma	Mouse/B6C3F1, female	Diet	IRIS
TCDD 2,3,7,8	B2	Inhalation	1.5E+05	Respiratory system, liver	—	Rat	Diet	HEAST
		Oral	1.5E+05	Respiratory system, liver	—	Rat	Diet	HEAST
Trichloroethene	B2	Inhalation	6.0E-03	Liver	—	Mouse	Inhalation	NCEA
		Oral	1.1E-02	Liver	—	Mouse	Gavage	NCEA

Key:

HEAST = EPA's Health Effects Assessment Summary Tables.
IRIS = EPA's Integrated Risk Information System.
NA = Not available.
NCA = National Coffee Association.
NCEA = EPA's National Center for Environmental Assessment.
NTP = National Toxicology Program.
OHEA = EPA's Office of Health and Environmental Assessment.
Other EPA Docs. = EPA criteria documents such as drinking water criteria documents, drinking water Health Advisory summaries, ambient water quality criteria documents, and air quality criteria documents.
SF = Slope Factor.

Table 3-19

TOXICITY INDICES FOR NONCARCINOGENIC EFFECTS OF COPCs
JENNISON-WRIGHT SITE, GRANITE CITY, ILLINOIS

Chemical	Exposure Route	RfD Type	Reference Dose (mg/kg-day)	Uncert Factor	Mod Factor	Confi-dence Level	Target Organ	Critical Effect	Study Description	Reference Source	Date
Acenaphthene	Inhalation	Chronic	6.0E-02	—	—	—	Liver	Hepatotoxicity	—	Chr. Oral RfD	
		Subchronic	6.0E-01	—	—	—	Liver	Hepatotoxicity	—	Subchr. Oral RfD	
	Oral	Chronic	6.0E-02	3000	1	Low	Liver	Hepatotoxicity	Mouse, oral subchronic study	IRIS	4/1/94
		Subchronic	6.0E-01	300	—	—	Liver	Hepatotoxicity	—	HEAST	5/31/95
Arsenic	Inhalation	Chronic	NA	—	—	—	—	—	—	—	
		Subchronic	NA	—	—	—	—	—	—	—	
	Oral	Chronic	3.0E-04	3	1	Medium	Skin	Hyperpigmentation, keratosis and possible vascular complications	Human chronic oral exposure	IRIS	3/1/93
		Subchronic	3.0E-04	3	—	—	Skin	Keratosis	—	HEAST	5/31/95
Benzene	Inhalation	Chronic	1.7E-03	1000	—	—	—	Hematopoietic effects	Mouse, subchronic inhalation study	NCEA	
		Subchronic	1.7E-02	100	—	Medium	—	Hematopoietic effects	Mouse, subchronic inhalation study	NCEA	
	Oral	Chronic	3.0E-03	—	—	—	—	—	—	NCEA	
		Subchronic	3.0E-03	—	—	—	—	—	—	NCEA	
Benzo[a]anthracene	Inhalation	Chronic	NA	—	—	—	—	—	—	—	
		Subchronic	NA	—	—	—	—	—	—	—	
	Oral	Chronic	NA	—	—	—	—	—	—	—	
		Subchronic	NA	—	—	—	—	—	—	—	

Table 3-19

TOXICITY INDICES FOR NONCARCINOGENIC EFFECTS OF COPCs
JENNISON-WRIGHT SITE, GRANITE CITY, ILLINOIS

Chemical	Exposure Route	RfD Type	Reference Dose (mg/kg-day)	Uncert Factor	Mod Factor	Confi-dence Level	Target Organ	Critical Effect	Study Description	Reference Source	Date
Benzo[a]pyrene	Inhalation	Chronic	NA	—	—	—	—	—	—	—	
Benzo[a]pyrene	Inhalation	Subchronic	NA	—	—	—	—	—	—	—	
	Oral	Chronic	NA	—	—	—	—	—	—	—	
		Subchronic	NA	—	—	—	—	—	—	—	
Benzo[b]fluoranthene	Inhalation	Chronic	NA	—	—	—	—	—	—	—	
		Subchronic	NA	—	—	—	—	—	—	—	
	Oral	Chronic	NA	—	—	—	—	—	—	—	
		Subchronic	NA	—	—	—	—	—	—	—	
Benzo[k]fluoranthene	Inhalation	Chronic	NA	—	—	—	—	—	—	—	
		Subchronic	NA	—	—	—	—	—	—	—	
	Oral	Chronic	NA	—	—	—	—	—	—	—	
		Subchronic	NA	—	—	—	—	—	—	—	
Beryllium	Inhalation	Chronic	NA	—	—	—	—	—	—	—	
		Subchronic	NA	—	—	—	—	—	—	—	
	Oral	Chronic	2.0E-03	100	1	Low	—	No adverse effects	Rat, chronic oral bioassay	IRIS	2/1/93
		Subchronic	2.0E-03	100	—	—	—	None observed	—	HEAST	7/1/97
Carbazole	Inhalation	Chronic	NA	—	—	—	—	—	—	—	
		Subchronic	NA	—	—	—	—	—	—	—	
	Oral	Chronic	NA	—	—	—	—	—	—	—	
		Subchronic	NA	—	—	—	—	—	—	—	

Table 3-19

TOXICITY INDICES FOR NONCARCINOGENIC EFFECTS OF COPCs
JENNISON-WRIGHT SITE, GRANITE CITY, ILLINOIS

Chemical	Exposure Route	RfD Type	Reference Dose (mg/kg-day)	Uncert Factor	Mod Factor	Confi-dence Level	Target Organ	Critical Effect	Study Description	Reference Source	Date
Chloroform	Inhalation	Chronic	1.1E-02	300	—	Medium	Liver	Necrosis	Rat, subchronic inhalation study	NCEA	8/25/93
		Subchronic	1.1E-02	—	—	—	Liver	Necrosis	—	Chr. Inhl RfD	
	Oral	Chronic	1.0E-02	1000	1	Medium	Liver	Fatty cyst formation in liver	Dog, chronic oral bioassay	IRIS	9/1/92
		Subchronic	1.0E-02	1000	—	—	Liver	Lesions	Dog oral capsule 7.5 years	HEAST	5/31/95
Chromium(III), soluble salts	Inhalation	Chronic	NA	—	—	—	—	—	—	—	
		Subchronic	NA	—	—	—	—	—	—	—	
	Oral	Chronic	1.5E+00	—	—	—	—	None observed	—	IRIS	9/1/98
		Subchronic	1.5E+00	1000	—	—	—	None observed	Rat diet	IRIS	9/1/98
Chromium(VI)	Inhalation	Chronic	2.9E-05	100	—	Low	Respiratory tract	Diffuse nasal symptoms	Human occupational study	IRIS	3/1/99
		Subchronic	2.9E-05	100	—	Low	—	—	—	IRIS	3/1/99
	Oral	Chronic	3.0E-03	500	1	Low	—	No effects reported	Rat, 1-year drinking water study	IRIS	3/1/99
		Subchronic	2.0E-02	100	—	—	—	None observed	Rat drinking water	HEAST	5/31/95
Chrysene	Inhalation	Chronic	NA	—	—	—	—	—	—	—	
		Subchronic	NA	—	—	—	—	—	—	—	
	Oral	Chronic	NA	—	—	—	—	—	—	—	
		Subchronic	NA	—	—	—	—	—	—	—	
Di(2-ethylhexyl)phthalate	Inhalation	Chronic	2.9E-03	100	—	Low	Lung	Increased lung weight, histological alterations	Rat, inhalation study	NCEA	3/18/96

Table 3-19

TOXICITY INDICES FOR NONCARCINOGENIC EFFECTS OF COPCs
JENNISON-WRIGHT SITE, GRANITE CITY, ILLINOIS

Chemical	Exposure Route	RfD Type	Reference Dose (mg/kg-day)	Uncert Factor	Mod Factor	Confi-dence Level	Target Organ	Critical Effect	Study Description	Reference Source	Date
Di(2-ethylhexyl)phthalate	Inhalation	Subchronic	2.9E-03	—	—	—	Lung	Increased lung weight, histological alterations	—	Chr. Inhl RfD	
	Oral	Chronic	2.0E-02	1000	1	Medium	Liver	Increased relative liver weight	Guinea pig, subchronic to chronic oral bioassay	IRIS	5/1/91
		Subchronic	2.0E-02	—	—	—	Liver	Increased relative liver weight	—	Chr. Oral RfD	
Dibenz[a,h]anthracene	Inhalation	Chronic	NA	—	—	—	—	—	—	—	
		Subchronic	NA	—	—	—	—	—	—	—	
	Oral	Chronic	NA	—	—	—	—	—	—	—	
		Subchronic	NA	—	—	—	—	—	—	—	
Dichloroethane, 1,2-	Inhalation	Chronic	2.9E-03	—	—	—	—	—	—	Other EPA Docs.	
		Subchronic	2.9E-03	—	—	—	—	—	—	Chr. Inhl RfD	
	Oral	Chronic	NA	—	—	—	—	—	—	—	
		Subchronic	NA	—	—	—	—	—	—	—	
Dimethylphenol, 2,4-	Inhalation	Chronic	2.0E-02	—	—	—	Whole body	Clinical signs (lethargy, prostration, and ataxia) and hematological changes	—	Chr. Oral RfD	
		Subchronic	2.0E-01	—	—	—	Nervous System	Effects	—	Subchr. Oral RfD	
	Oral	Chronic	2.0E-02	3000	1	Low	Whole body	Clinical signs (lethargy, prostration, and ataxia) and hematological changes	Mouse, subchronic oral gavage	IRIS	11/1/90

Table 3-19

TOXICITY INDICES FOR NONCARCINOGENIC EFFECTS OF COPCs
JENNISON-WRIGHT SITE, GRANITE CITY, ILLINOIS

Chemical	Exposure Route	RfD Type	Reference Dose (mg/kg-day)	Uncert Factor	Mod Factor	Confi-dence Level	Target Organ	Critical Effect	Study Description	Reference Source	Date
Dimethylphenol, 2,4-	Oral	Subchronic	2.0E-01	300	—	—	Nervous System	Effects	—	HEAST	3/31/93
Ethylbenzene	Inhalation	Chronic	2.9E-01	300	1	Low	Whole body	Developmental toxicity	Rat and rabbit, developmental inhalation studies	IRIS	3/1/91
		Subchronic	2.9E-01	—	—	—	Whole body	Developmental toxicity	—	Chr. Inhl RfD	
	Oral	Chronic	1.0E-01	1000	1	Low	Liver	Liver and kidney toxicity	Rat, subchronic to chronic oral bioassay	IRIS	6/1/91
		Subchronic	1.0E-01	—	—	—	Liver	Liver and kidney toxicity	—	Chr. Oral RfD	
Hexachlorocyclohexane, alpha-	Inhalation	Chronic	NA	—	—	—	—	—	—	—	
		Subchronic	NA	—	—	—	—	—	—	—	
	Oral	Chronic	NA	—	—	—	—	—	—	—	
		Subchronic	NA	—	—	—	—	—	—	—	
Indeno[1,2,3-cd]pyrene	Inhalation	Chronic	NA	—	—	—	—	—	—	—	
		Subchronic	NA	—	—	—	—	—	—	—	
	Oral	Chronic	NA	—	—	—	—	—	—	—	
		Subchronic	NA	—	—	—	—	—	—	—	
Manganese (diet)	Inhalation	Chronic	1.4E-05	1000	1	Medium	Nervous system	Impairment of neurobehavioral function	Occupational exposure to manganese dioxide	IRIS	12/1/93
		Subchronic	1.4E-05	—	—	—	Nervous system	Impairment of neurobehavioral function	—	Chr. Inhl RfD	

Table 3-19

TOXICITY INDICES FOR NONCARCINOGENIC EFFECTS OF COPCs
JENNISON-WRIGHT SITE, GRANITE CITY, ILLINOIS

Chemical	Exposure Route	RfD Type	Reference Dose (mg/kg-day)	Uncert Factor	Mod Factor	Confi-dence Level	Target Organ	Critical Effect	Study Description	Reference Source	Date
Manganese (diet)	Oral	Chronic	1.4E-01	1	1	Varied	Central nervous system	CNS effects	Human chronic ingestion data	IRIS	6/1/95
		Subchronic	1.4E-01	1	—	—	Central nervous system	CNS effects	—	HEAST	5/31/95
Manganese (water)	Inhalation	Chronic	1.4E-05	1000	1	Medium	Nervous system	Impairment of neurobehavioral function	Occupational exposure to manganese dioxide	IRIS	12/1/93
		Subchronic	1.4E-05	—	—	—	Nervous system	Impairment of neurobehavioral function	—	Chr. Inhl RfD	
	Oral	Chronic	4.7E-02	1	1	Varied	Central nervous system	CNS effects	Human chronic ingestion data	IRIS	3/1/99
		Subchronic	4.7E-02	1	—	—	Central nervous system	CNS effects	—	IRIS	3/1/99
Methylene chloride	Inhalation	Chronic	8.6E-01	100	—	—	Liver	Liver toxicity	Rat, 2-year inhalation study	HEAST	5/31/95
		Subchronic	8.6E-01	—	—	—	Liver	Liver toxicity	—	Chr. Inhl RfD	
	Oral	Chronic	6.0E-02	100	1	Medium	Liver	Liver toxicity	Rat, 2-year drinking water bioassay	IRIS	3/1/88
		Subchronic	6.0E-02	—	—	—	Liver	Liver toxicity	—	Chr. Oral RfD	
Methylphenol, 2-	Inhalation	Chronic	5.0E-02	—	—	—	Whole body	Decreased body weights and neurotoxicity	—	Chr. Oral RfD	

Table 3-19

TOXICITY INDICES FOR NONCARCINOGENIC EFFECTS OF COPCs
JENNISON-WRIGHT SITE, GRANITE CITY, ILLINOIS

Chemical	Exposure Route	RfD Type	Reference Dose (mg/kg-day)	Uncert Factor	Mod Factor	Confi-dence Level	Target Organ	Critical Effect	Study Description	Reference Source	Date
Methylphenol, 2-	Inhalation	Subchronic	5.0E-01	—	—	—	Whole body	—	—	Subchr. Oral RfD	
	Oral	Chronic	5.0E-02	1000	1	Medium	Whole body	Deceased body weights and neurotoxicity	Rat, 90-day oral subchronic neurotoxicity study	IRIS	9/1/90
		Subchronic	5.0E-01	100	—	—	Whole body	—	Rat oral gavage	HEAST	5/31/95
Naphthalene	Inhalation	Chronic	8.6E-04	—	—	—	—	—	—	Chr. Oral RfD	
		Subchronic	8.6E-04	—	—	—	—	—	—	Chr. Oral RfD	
	Oral	Chronic	2.0E-02	1000	—	—	—	—	Rat, subchronic gavage study	IRIS	3/1/99
		Subchronic	2.0E-02	—	—	—	—	—	—	Chr. Oral RfD	3/1/99
Pentachlorophenol	Inhalation	Chronic	3.0E-02	—	—	—	Liver, Kidney	Liver and kidney pathology	—	Chr. Oral RfD	
		Subchronic	3.0E-02	—	—	—	Fetus	Fetotoxicity	—	Subchr. Oral RfD	
	Oral	Chronic	3.0E-02	100	1	Medium	Liver, kidney	Liver and kidney pathology	Rat, oral chronic study	IRIS	2/1/93
		Subchronic	3.0E-02	100	—	—	Fetus	Fetotoxicity	—	HEAST	3/31/93
Phenol	Inhalation	Chronic	6.0E-01	—	—	—	Whole body	Reduced fetal body weight in rats	—	Chr. Oral RfD	
		Subchronic	6.0E-01	—	—	—	Fetus	Decreased weight	—	Subchr. Oral RfD	
	Oral	Chronic	6.0E-01	100	1	Low	Whole body	Reduced fetal body weight in rats	Rat, oral developmental study	IRIS	2/1/90

Table 3-19

TOXICITY INDICES FOR NONCARCINOGENIC EFFECTS OF COPCs
JENNISON-WRIGHT SITE, GRANITE CITY, ILLINOIS

Chemical	Exposure Route	RfD Type	Reference Dose (mg/kg-day)	Uncert Factor	Mod Factor	Confi-dence Level	Target Organ	Critical Effect	Study Description	Reference Source	Date
Phenol	Oral	Subchronic	6.0E-01	100	—	—	Fetus	Decreased weight	—	HEAST	3/31/93
TCDD 2,3,7,8	Inhalation	Chronic	NA	—	—	—	—	—	—	—	
		Subchronic	NA	—	—	—	—	—	—	—	
	Oral	Chronic	NA	—	—	—	—	—	—	—	
		Subchronic	NA	—	—	—	—	—	—	—	
Thallium	Inhalation	Chronic	NA	—	—	—	—	—	—	—	
		Subchronic	NA	—	—	—	—	—	—	—	
	Oral	Chronic	8.0E-05	3000	—	Low	Liver	Increased levels of SGOT and LDH	Rat oral subchronic study	IRIS	3/1/99
		Subchronic	8.0E-04	300	—	—	Liver	Increased SGOT	—	HEAST	7/1/97
Toluene	Inhalation	Chronic	1.1E-01	300	1	Medium	Brain	Neurological effects	Human occupational study	IRIS	8/1/92
		Subchronic	2.9E-01	—	—	—	Brain	Neurological effects	—	NCEA	
	Oral	Chronic	2.0E-01	1000	1	Medium	Liver, kidney	Changes in liver and kidney weights	Rat, 3-week gavage study	IRIS	4/1/94
		Subchronic	2.0E-01	100	—	—	Liver	Altered weight	—	HEAST	3/31/93
Trichloroethene	Inhalation	Chronic	6.0E-03	—	—	—	—	—	—	Chr. Oral RfD	
		Subchronic	6.0E-03	—	—	—	—	—	—	Chr. Oral RfD	
	Oral	Chronic	6.0E-03	—	—	—	—	—	—	Other EPA Docs.	
		Subchronic	6.0E-03	—	—	—	—	—	—	Chr. Oral RfD	

Table 3-19 (Cont.)

Key:

CNS	= Central Nervous System.
HEAST	= EPA's Health Effects Assessment Summary Tables.
IRIS	= EPA's Integrated Risk Information System.
LDH	= Lactate Dehydrogenase (enzyme).
NA	= Not available.
NCEA	= EPA's National Center for Environmental Assessment.
OHEA	= EPA's Office of Health and Environmental Assessment.
Other EPA Docs.	= EPA criteria documents such as drinking water criteria documents, drinking water Health Advisory summaries, ambient water quality criteria documents, and air quality criteria documents.
RfD	= Reference dose.
SGOT	= Serum Glutamic-Oxaloacetic Transaminase (enzyme).

Section 4: Risk Characterization

Potential cancer risks are assessed by multiplying the estimated lifetime average daily intake (LADI) of a carcinogen by its SF. This calculated risk is expressed as the probability of an individual developing cancer over a lifetime and is an estimated upper-bound incremental probability. Cancer risks initially are estimated separately for exposure to each chemical for each exposure pathway and receptor category (i.e., adult or child). Separate cancer risk estimates then are summed across chemicals, receptors, and all exposure pathways applicable to the same population to obtain the total excess lifetime cancer risk for that population. Cancer risk estimates are provided in scientific notation; 1×10^{-6} is equivalent to 1E-6, which equals 0.000001.

The potential for adverse effects resulting from exposure to a noncarcinogen is assessed by comparing the estimated chronic daily intake (CDI) or Subchronic Daily intake (SDI) of a substance to its chronic or subchronic RfD. This comparison is made by calculating the ratio of the estimated CDI or SDI to the corresponding RfD to yield a hazard quotient (HQ). HQs that are associated with similar critical effects (e.g., liver damage) should be summed together to obtain a hazard index (HI) for that effect, whereas HQs for different critical effects should be kept separate. However, for screening purposes, HQs are commonly summed across all chemicals, exposure routes, and pathways applicable to a given population to obtain an HI for that population.

For evaluating noncarcinogenic effects, EPA defines acceptable exposure levels as those to which the human population, including sensitive subgroups, may be exposed without adverse effects during a lifetime or part of a lifetime, incorporating an adequate margin of safety (EPA 1989). This acceptable exposure level is approximated by an HI less than or equal to 1.0.

Non-cancer risks are usually assessed by calculating a hazard quotient, which is the ratio of the estimated exposure to the RfD as follows:

$$HQ = \frac{CDI}{RfD}$$

where:

HQ = Hazard quotient;
CDI = Chronic daily intake (exposure); and
RfD = Reference dose (acceptable daily intake).

The following table, reproduced from the EE/CA quantifies the risks for both carcinogenic and non-carcinogenic effects for the different exposure scenarios considered.

SUMMARY OF RISK ESTIMATES
JENNISON-WRIGHT SITE
GRANITE CITY, ILLINOIS

Scenario	Receptor	Age Group	Location	Pathway	Total HI	% HI by Path-way	HQ>1 by Chemical (% of total)	Total Cancer Risk	% CR by Path-way	CR> 10^{-6} by Chemical (% of total)
Current Exposure Scenarios										
1	Current Site Visitors	Adolescent	On site	Ingestion of Soil	0 024	18.6	None	3.8E-04	49.10	TCDD-TEQ (82%)
				Dermal Absorption from Soil	0.082	62.9		3.9E-04	50.85	Benzo(a)pyrene (10%)
				Inhalation of Vapor from Soil	0.021	16.4		4.2E-07	0.05	Benzo(a)anthracene (2%)
				Inhalation of Fugitive Dust	0.0027	2.1		8.3E-09	0.0011	Dibenz(a,h)anthracene (2%)
				Receptor/Pathway Total	**0.13**	**100.0**		**7.7E-04**	**100.0**	Benzo(b)fluoranthene (1%)
										Carbazole (<1%)
										Pentachlorophenol (<1%)
										Indeno(1,2,3-cd)pyrene (<1%)
2	Current Nearby Residents	Adult/Child (Integrated)	Off site	Inhalation of Vapor from Soil	0.355	80.4	None	2.6E-05	96.3	TCDD-TEQ (76%)
				Inhalation of Fugitive Dust	0.087	19.6		1.0E-06	3.7	Pentachlorophenol (6%)
				Receptor/Pathway Total	**0.4**	**100.0**		**2.7E-05**	**100.0**	Carbazole (7%)
										Benzo(a)pyrene (4%)

SUMMARY OF RISK ESTIMATES
JENNISON-WRIGHT SITE
GRANITE CITY, ILLINOIS

Scenario	Receptor	Age Group	Location	Pathway	Total HI	% HI by Path-way	HQ>1 by Chemical (% of total)	Total Cancer Risk	% CR by Path-way	CR> 10^{-6} by Chemical (% of total)
		Child	Off site	Inhalation of Vapor from Soil	1.5	90.1	Naphthalene (90%)	2.3E-05	98.3	TCDD-TEQ (76%)
				Inhalation of Fugitive Dust	0.17	9.9		3.9E-07	1.7	Pentachlorophenol (6%)
				Receptor/Pathway Total	**1.7**	**100.0**		**2.3E-05**	**100.0**	Carbazole (7.5%)
Future Exposure Scenarios										
3	Future Permanent Site Worker	Adult	On site	Ingestion of Soil	0.03	3.6	None	2.0E-03	19.4	TCDD-TEQ (86%)
				Dermal Absorption from Soil	0.41	49.4		8.1E-03	80.4	Benzo(a)pyrene (8%)
				Inhalation of Vapor from Soil	0.34	41.1		1.4E-05	0.1	Benzo(a)anthracene (2%)
				Inhalation of Fugitive Dust	0.05	6.0		6.0E-07	0.006	Dibenz(a,h)anthracene (1%)
				Receptor/Pathway Total	**0.8**	**100.0**		**1.0E-02**	**100.0**	Benzo(b)fluoranthene (<1%)

SUMMARY OF RISK ESTIMATES
JENNISON-WRIGHT SITE
GRANITE CITY, ILLINOIS

Scenario	Receptor	Age Group	Location	Pathway	Total HI	% HI by Path-way	HQ>1 by Chemical (% of total)	Total Cancer Risk	% CR by Path-way	CR> 10^{-6} by Chemical (% of total)
Future Exposure Scenarios (Cont.)										
3	Future Permanent Site Worker (Cont.)	Adult (Cont.)	On site (Cont.)							Pentachlorophenol (<1%) Indeno(1,2,3-cd)pyrene (<1%) Benzo(k)fluoranthene (<1%) Carbazole (<1%) Benzene (<1%) Chrysene (<1%)
4	Future Permanent Site Worker	Adult	22nd St. Lagoon	Ingestion of Water	46.7	--	Benzene (46%) Naphthalene (22%) 2,4-Dimethylphenol (16%) 4-Methylphenol (9%) Manganese (3%)	2.4E-03	--	Benzene (28%) Pentachlorophenol (25%) Benzo(a)anthracene (21%) Benzo(b)fluoranthene (19%) Arsenic (5%) Benzo(k)fluoranthene (1%) Chrysene (<1%)
			Area H	Ingestion of Water	0.2	--	None	2.0E-05	--	Pentachlorophenol (99%)
			Jennite Pit	Ingestion of Water	0.3	--	None	1.8E-05	--	Arsenic (94%)
			PCP Process Area	Ingestion of Water	31.9	--	Pentachlorophenol (90%) Arsenic (7%) Manganese (3%)	3.7E-02	--	Pentachlorophenol (99%) Arsenic (<1%) alpha-BHC (<1%)
5	Future Construction Worker	Adult	On site	Ingestion of Soil	0.3	0.7	Naphthalene (94%)	1.4E-04	65.6	TCDD-TEQ (87%)
				Dermal Absorption from Soil	0.5	1.1	Benzene (3%)	6.2E-05	28.3	Benzo(a)pyrene (7%)
				Inhalation of Vapor from Soil	42.1	97.5		1.3E-05	6.1	Benzo(a)anthracene (2%)

SUMMARY OF RISK ESTIMATES
JENNISON-WRIGHT SITE
GRANITE CITY, ILLINOIS

Scenario	Receptor	Age Group	Location	Pathway	Total HI	% HI by Path-way	HQ>1 by Chemical (% of total)	Total Cancer Risk	% CR by Path-way	CR> 10^{-6} by Chemical (% of total)
Future Exposure Scenarios (Cont.)										
5	Future Construction Worker (Cont.)	Adult (Cont.)	On site (Cont)	Inhalation of Fugitive Dust	0.3	0.8		2.6E-08	0.01	Dibenz(a,h)anthracene (1%)
				Receptor/Pathway Total	**43.2**	**100.0**		**2.2E-04**	**100.0**	Benzo(b)fluoranthene (<1%)
										Benzene (<1%)
6	Future Nearby Residents	Adult/Child (Integrated)	Off site	Inhalation of Vapor from Soil	0.5	89.3	None	2.5E-05	96.5	TCDD-TEQ (79%)
				Inhalation of Fugitive Dust	0.1	10.7		9.1E-07	3.5	Benzene (10%)
				Receptor/Pathway Total	**0.6**	**100.0**		**2.6E-05**	**100.0**	
		Child	Off site	Inhalation of Vapor from Soil	1.8	93.5	Naphthalene (90%)	2.2E-05	98.4	TCDD-TEQ (79%)
				Inhalation of Fugitive Dust	0.1	6.5		3.6E-07	1.6	Benzene (10%)
				Receptor/Pathway Total	**1.9**	**100.0**		**2.4E-05**	**100.0**	
7	Future Nearby Residents During Construction	Adult/Child (Integrated)	Off site	Inhalation of Vapor from Soil	44.7	99.4	Naphthalene (96%)	1.4E-05	99.8	TCDD-TEQ (79%)
				Inhalation of Fugitive Dust	0.3	0.6	Benzene (3%)	2.2E-08	0.2	Benzene (10%)
				Receptor/Pathway Total	**45.0**	**100.0**		**1.4E-05**	**100.0**	
		Child	Off site	Inhalation of Vapor from Soil	114.4	99.35	Naphthalene (96%)	3.7E-05	99.8	TCDD-TEQ (79%)
				Inhalation of Fugitive Dust	0.7	0 65	Benzene (3%)	5.6E-08	0.2	Benzene (10%)
				Receptor/Pathway Total	**115.1**	**100.0**		**3.7E-05**	**100.0**	Benzo(a)pyrene (3%)

Key:

CR = Cancer risk.
HI = Hazard index.
HQ = Hazard quotient.
TEQ = Toxic equivalent.

Discussion of Uncertainty
The risk characterization combines and integrates the information developed in the exposure and toxicity assessments; therefore, uncertainties associated with these assessments also affect the degree of confidence that can be placed in the risk characterization results.

Summary of Exposure Assessment Uncertainties
Overall, the exposure estimates obtained are moderately reliable for COPCs at the Jennison-Wright site. Several of the factors adding uncertainty to the estimates tend to result in overestimation of exposure. These include:

- The directed nature of some elements of the sampling program (i.e., dioxins/furans, subsurface soils, and groundwater);
- The use of conservatively estimated or extrapolated values for some exposure point concentrations;
- The use of the steady-state assumption for estimating soil exposure point concentrations; and
- The use of conservative exposure parameter values in the exposure estimation calculations.

One factor that could lead to under-estimation of the exposures is the use of sample quantitation limits that could result in missing low concentrations of some contaminants that might pose significant risks. However, only two chemicals were excluded from the Human Health Risk Evaluation (HHRE) that meet this criterion.

Finally, one factor that could lead to over-estimation or under-estimation of exposures is the use of the steady-state assumption for groundwater exposure concentration estimates.

The cumulative effect of all of the exposure uncertainties most likely is to overestimate the true potential exposure of receptors at the site.

Summary of Toxicity Assessment Uncertainties
Because of the number of assumptions, data points, and calculations used to derive toxicity indices, a degree of uncertainty is necessarily associated with the numerical toxicity values in any risk assessment. To evaluate the meaning of any risk assessment, the uncertainties in the assumptions made, the potential impact of quantitative changes in those assumptions on the risk estimates, and the relevance of the findings to real-world exposures and risks must be considered.

The basic uncertainties underlying the assessment of the toxicity of a chemical include:

- Uncertainties arising from the design, execution, or relevance of the scientific studies that form the basis of the assessment; and

- Uncertainties involved in extrapolating from the underlying scientific studies to the exposure situation being evaluated, including variable responses to chemical exposures within human and animal populations, between species, and between routes of exposure.

These basic uncertainties could result in a toxicity estimate, based directly on the underlying studies, that either under- or over-estimates the true toxicity of a chemical.

The toxicity assessment process compensates for these basic uncertainties through the use of safety factors (uncertainty factors) and modifying factors when assessing noncarcinogens and the use of the upper 95th percent confidence limit from the linearized multistage model for the SF when assessing carcinogens. The use of the safety factors and the upper 95th percent confidence limit in deriving the RfDs and SFs ensures that the toxicity values used in the risk estimation process are unlikely to underestimate the true toxicity of a chemical.

In addition to these basic uncertainties, additional uncertainty is introduced by the route-to-route extrapolation of toxicity values. However, this practice reduces the chance that overall risks from site contamination will be underestimated.

Other Uncertainties

Two additional factors need to be considered when discussing uncertainties associated with the overall risk characterization: the cumulative effect of using conservative assumptions throughout the process; and the likelihood of the exposures postulated and estimated in the exposure assessment actually occurring.

The cumulative effect of using conservative assumptions throughout the risk estimation process could be to substantially overestimate the true risks. However, exposure factors used in this assessment were based on site-specific information, whenever it was available. Consequently, the risk estimates obtained for the Jennison-Wright site are believed to be sufficiently conservative to adequately protect human health, while generally remaining within the range of risks that individuals in the area may actually experience.

The last uncertainty factor to consider is the likelihood of the postulated exposures actually occurring at the Jennison-Wright site. The soil exposure pathways identified as complete under current conditions are all plausible, and exposure is either presently occurring by these pathways or such exposure could reasonably be expected. Although the postulated frequencies of occurrence may overestimate average occurrence, they could reflect the actual exposures of some individuals.

Conversion of the site to industrial or commercial use and exposure of site workers and nearby residents to site soils by the same routes in the future is also plausible. Exposure to contaminants

through the use of site groundwater as a drinking water source is considered unlikely because there is a public water supply.

SUMMARY OF ECOLOGICAL RISK ASSESSMENT (SERE)

The SERE was prepared based on information collected by Ecology & Environment (E & E) during the site characterization investigation from July through September 1997. Federal and state agencies were contacted for information on sensitive habitats and protected species in the vicinity of the site, and relevant maps were reviewed to identify nearby sensitive habitats. In addition, information was obtained from a local Illinois Department of Natural Resources (IDNR) representative who visited the site.

A quantitative ecological risk evaluation for the Jennison-Wright site was not performed because the findings of the SERE indicate that the site is not likely to impact wildlife. Specifically, the following findings were made for the Jennison-Wright SERE:

- Only approximately 50% of the site is vegetated, plant species at the site are of low value to wildlife, and there are no aquatic resources at the site. Habitat at the Jennison-Wright site is of a very low quality to wildlife;

- The site is located in an industrial and residential area. Only common wildlife accustomed to human activity and disturbance could potentially use the site, and would likely do so only as transient or "visiting" species;

- The closest aquatic resource is an unnamed intermittent stream approximately 1 mile from the site. This stream is likely populated by a low diversity of stress-tolerant species. Site contaminants are not likely to impact this stream because of the distance from the site and the absence of contaminant migration routes;

- The closest ecologically sensitive areas are wetland pockets and heron rookeries located approximately 1 mile to the north and northwest of the site. Site contaminants are not likely to impact this resource; and

- Site remediation is planned. Consequently, off-site contaminant migration (groundwater and surface soil) will be mitigated, and the already-low potential for exposure from surface soil will be further decreased.

Based on the above, no adverse impacts to wildlife and/or sensitive habitats in the vicinity of the site are expected to result from contamination at the Jennison-Wright site.

The conclusions of the ecological portion of the risk assessment are:

- Habitat at the Jennison-Wright site is of a very low quality to wildlife;

- The site is located in a mixed industrial/residential area. Only common wildlife accustomed to human activity and disturbance are likely to use the site; and

- The closest aquatic resource and ecologically sensitive areas to the Jennison-Wright site are located approximately one mile away and are not likely to be impacted by on-site contamination.

REMEDIAL ACTION OBJECTIVES

Remedial Action Objectives (RAOs) are medium-specific goals for protecting human health and the environment. The RAOs for the Jennison-Wright site were established under the broad guideline of being protective of human health and the environment, while remaining within statutory limits and attaining Applicable or Relevant & Appropriate Requirements (ARARs) to the extent practicable. The RAOs were developed to reduce the potential for exposure through specific remedial actions (i.e., institutional controls, containment, removal, and/or treatment). During the development of the RAOs, ARARs and contaminant concentrations are evaluated to establish risk-based cleanup objectives (CUOs) and to determine the scope of the removal action(s) necessary to meet the objectives. The CUOs proposed for the Jennison-Wright site are presented shown in the table below.

CLEANUP OBJECTIVES
JENNISON WRIGHT SUPERFUND SITE

Soil COPC	Proposed CUO (µg/kg)	IEPA TACO Tier 1 (µg/kg)
Benzene	3,000[a]	2,100
Benzo(a)anthracene	14,000[b]	170,000
Benzo(a)pyrene	2,000[c]	17,000
Benzo(b)fluoranthene	22,000[c]	170,000
Benzo(k)fluoranthene	32,000[b]	1,700,000
Naphthalene	27,000[a]	8,200,000
Carbozole	954,000[c]	None
Dibenzo(a,h)anthracene	2,000[c]	17,000
Indeno(1,2,3-cd)pyrene	11,000[b]	170,000
PCP	51,000[b]	520,000
TCDD-TEF	1	None

CLEANUP OBJECTIVES JENNISON WRIGHT SUPERFUND SITE		
Groundwater COPC	**Proposed CUO (µg/L)**	**IEPA TACO Tier 1 (µg/L)**
Arsenic	50	50
Benzene	10	5.0
Benzo(a)anthracene	0.13	0.13
Benzo(b)fluoranthene	0.18	0.18
Benzo(k)fluoranthene	0.4	0.17
Chrysene	4	1.5
PCP	1.0	1.0
alpha-BHC	0.03	0.03
Manganese	200	None
Naphthalene	400	25
2,4-Dimethylphenol	200	140
2-Methylphenol	500	350

[a] CUO is based on the construction worker scenario.
[b] CUO is based on the estimated soil saturation concentration.
[c] CUO is based on the permanent site worker scenario.

Note: The proposed CUOs were calculated using the results of the Streamlined Risk Evaluation (SRE) as a basis. The proposed soil CUOs represent the 10^{-5} risk level for carcinogens, or a Hazard Quotient (HQ) of 1 for noncarcinogens.

There are two exceptions for these CUOs. The Maximum Contaminant Level (MCL) for arsenic in groundwater is given as 50μg/L and has been adopted as the cleanup level for arsenic although the corresponding 10^{-6} cleanup level for arsenic is 0.2μg/L. The other exception is the cleanup level for dioxin in soil at the site. The 10^{-5} risk level CUO for dioxin was calculated at 0.2μg/L. However, based upon a review of the Agency for Toxic Substances and Disease Registry (ATSDR) documentation, a CUO of 1μg/kg is recommended by ATSDR for dioxin and is therefore proposed.

For dioxin cleanup numbers, EPA's "Approach for Addressing Dioxin in Soil at CERCLA and RCRA Sites," OSWER Directive 9200.4-26, April 13, 1998, was taken into consideration in developing preliminary soil remediation goals for dioxin. As documented in the Administrative Record, a preliminary remediation goal of 1 ppb technical equivalency factor (TEF) was selected

for soil at the site for areas reasonably expected to be used as commercial/industrial property (with the potential for a day-care facility to be located at the site in the future). A final soil cleanup level of 1 ppb Technical Equivalency Factor (TEF) was selected for the site based on an evaluation, as documented in the Record of Decision, of a range of cleanup alternatives using EPA's nine remedy selection criteria. The final soil cleanup level of 1 ppb TEF for this area reasonably expected to be used as commercial/industrial property (with a potential future day care facility to be located here) is considered protective (as documented in the Administrative Record) for human health and the environment, based on future use of the site for residential purposes, and reflects and excess cancer risk of 2.5×10^{-4}.

The proposed groundwater CUOs represent the 10^{-6} level for carcinogens or a hazard quotion (HQ) of 1 for noncarcinogens, or the maximum contaminant level (MCL). The IEPA TACO Tier 1 values are provided for comparison. TACO Tier 1 values represent the 10^{-6} risk level for carcinogens, and a HQ of 1 for noncarcinogens. For soil, the more conservative (lower) of the ingestion or inhalation values for industrial/commercial properties, construction worker scenario, are shown. For groundwater, the TACO Tier 1 figures are equivalent to the Class 1 groundwater standards.

Based on the identified ARARs and to be considered (TBC) requirements, and the need to reduce the potential threat to human health and the environment, the following general RAOs were developed for the Jennison-Wright site:

- Prevent current nearby residents and potential future site workers from contacting, ingesting, or inhaling on-site soil and waste materials containing COPCs that exceed the calculated risk-based CUOs;
- Prevent the continued release of contaminants to groundwater;
- Initiate long-term groundwater restoration to MCLs;
- Abate regulated asbestos containing material (RACM) present in the on-site buildings;
- Remove listed hazardous waste from the site for treatment and disposal at an appropriately licensed facility; and
- To the extent practical, pump NAPLs from the subsurface in the vicinity of the 22nd Street lagoon, and treat collected groundwater.

DESCRIPTION OF ALTERNATIVES

The alternatives analyzed for this site are presented below. Each Operable Unit (OU) is discussed with a variable number of alternatives based upon available technology for that particular media. These alternatives correspond with those outlined in the EE/CA.

Alternative 1: "No Action" Alternative

Time to Implement: None

The Superfund program requires that the "no action" alternative be evaluated at every site to establish a baseline for comparison. Under this alternative the Illinois EPA and USEPA would take no further action at the site to prevent exposure to the soil and groundwater contamination. This alternative is applicable to each of the media addressed by the EE/CA.

Operable Unit 1: Soils and Waste (S&W)

The Resource Conservation and Recovery Act (RCRA) regulations make a distinction between what is considered waste and soil. Due to treatment regulations, waste and soils must be treated differently. However, both are listed in the same OU because of their similar nature. An estimated 55,0000 cubic yards of contaminated soils and 300 cubic yards of waste will be addressed.

"Waste":

Regardless of the remaining alternatives for the treatment of soils at the site, there is only one alternative for what is classified as "waste" at the site. This waste is comprised of the remaining oil, sludge, and drip track residues found in various containers and areas around the site. Due to regulations dictated by RCRA, and the future anticipated use of the site, the wood-treating waste found on the site would be removed from the site and incinerated at an approved off-site facility.

Time to Implement: 12 months

Alternative S&W 1: 24-Inch Permeable Soil Cover

Time to Implement: 12 months

To implement this alternative, all miscellaneous debris would be removed from the site. All ground vegetation would be removed, chipped, and graded on-site. A fabric underliner would be placed upon the graded site and act as a boundary between contaminated and clean soils. The fabric would then be covered with 18 inches of permeable fill material and 6 inches of topsoil. The topsoil layer would then be seeded for erosion control.

This alternative is intended to reduce the potential for direct human exposure to contaminated soil and to minimize migration of contaminants off site through windblown dust particles or by being tracked off site by vehicles or machinery operating on site during demolition, cleanup, and redevelopment activities. Because an impermeable soil cover would not be infiltrated by rainfall, the stormwater would cause ponding on the cover. Construction of effective sewers or drainage ditches to direct stormwater to the stormwater sewer system would be difficult due to the flat nature of the site. Therefore, a permeable cover was selected.

Because contaminated soils and wastes would remain on site, this alternative would also include institutional controls in the form of deed restrictions to limit the potential for human exposure to contaminants. Any future redevelopment of the site (such as a brownfields strategy) would require a reevaluation of the protectiveness of the cover, based on final site configuration and projected use.

ARARs applicable to Alternative S&W1 include pertinent RCRA sections for the removal and disposal of listed hazardous waste. During excavation activities associated with the listed hazardous wastes, dust may be generated. Therefore, dust suppression (RCRA §3004[e]) also would be considered an ARAR. Since the proposed landfill cover is going to be constructed of permeable materials, stormwater will infiltrate through the cover, causing contaminants to continue to leach into the groundwater. Therefore, Title 35, IAC, Part 620, entitled Groundwater Quality, and the Safe Drinking Water Act (SDWA) can be considered to be relevant and appropriate. While not an ARAR, TACO CUOs are to be considered for this alternative.

EPA's RCRA guidance states that though a contaminated medium may exhibit characteristics of a hazardous waste, it is not considered a hazardous waste until it is excavated. Additionally, TCLP analysis conducted as part of the site investigation indicates that surface soils, subsurface soil, and sediments at the site do not exhibit characteristics of a hazardous waste. Since no listed hazardous waste will be left on site, and no additional excavations are planned for this alternative, RCRA closure and post-closure requirements and the Treatment Surface Impoundment Exemption (35 IAC 728.104) do not apply.

Alternative S&W 2: Landfarming

Time to Implement: 6 years

In this alternative, soils contaminated above the CUOs would be treated in an on-site landfarm treatment cell constructed on the northeastern portion of the site. According to EPA's Presumptive Remedies for Soils, Sediments, and Sludges at Wood Treater Sites, landfarming is an EPA-recommended technology for wood-treater sites (EPA 1995b). In this landfarming cell, biodegradable contaminants are subjected simultaneously to the following processes: 1) bacterial and chemical decomposition, 2) leaching of water-soluble components, and 3) volatization of some components of the original waste, as well as certain decomposition products. Only soils would be treated via this alternative. The landfarm treatment cell would consist of a compacted clay liner, drainage system, retention pond, water treatment and discharge system, moisture and nutrient addition equipment, and tilling equipment. Once the soil within the cell is remediated to the CUOs, the soil would be graded to final contours across the site.

Surficial soil, subsurface soil, and non-RCRA hazardous wastes would be treated in the landfarm cell. The results of toxicity characteristic leaching procedure (TCLP) analysis indicate that surface and subsurface soil would not be considered RCRA characteristic hazardous waste; therefore, RCRA Subtitle C requirements for treatment storage disposal facilities (TSDFs) and

land disposal restrictions (LDRs) do not apply to the landfarm cell. Deep excavations remaining after subsurface soil removal would be backfilled with fill material as soon as feasible to prevent the ponding of water in the excavations, and to eliminate the potential of workers or trespassers falling into the excavations. After excavation, the contaminated soils and wastes would be transported to a soil stockpile area constructed adjacent to the treatment cell. Soil from the stockpile would be placed into the cell to a uniform thickness of 1 foot. This would allow for ease of tilling the soil to increase the oxygen content, and mixing in of nutrients. Using the average concentrations of nitrogen and phosphorus present in site soil, it is estimated that the treatment of 55,000 cubic yards of contaminated soil would require approximately 18,000 pounds of nitrogen as N and 3,000 pounds of phosphorus as P. Exact nutrient addition requirements would be determined in the design phase by conducting additional bench-scale testing.

The landfarm cell would be designed to drain water into an approximately one-million-gallon retention pond. Water in the retention pond would be allowed to evaporate. When the water level in the pond approached 80% of full capacity, drawdown of the pond would begin by pumping the water through a carbon filter (as required by Granite City), followed by discharge to the Granite City sanitary sewer system. The contractor operating the cell would be responsible for metering the discharge.

Based on an area of 6.9 acres and a lift thickness of 1 foot, approximately 11,000 cubic yards of soil would be treated per lift. Considering the climate in the area of the Jennison-Wright site, it is assumed that one soil lift (11,000 cubic yards) would be processed in the treatment cell per year. It is estimated that six years would be required to treat the entire volume of contaminated soil.

The landfarm cost estimate assumes that one soil sample would be collected on a quarterly basis per 1,000 cubic yards of soil within the landfarm cell, and that each sample would be analyzed for the soil COPCs, RCRA characteristic hazardous waste parameters, and nutrient constituents. The purpose of this sampling would be to monitor the progress of the soil treatment, to determine when soil CUOs have been achieved, and to ensure that treated soils do not exhibit RCRA hazardous waste characteristics. In the event that, after one year of treatment, a batch of soil within the cell does not achieve CUOs, it would likely be left in the cell for further treatment. If, after a period of one additional year of treatment, the batch still has not met the CUOs or exhibits RCRA hazardous waste characteristics, the isolated soil would be shipped off site for disposal. Air samples would be collected monthly from one upwind and two downwind monitoring points to ensure that any air emissions from the landfarm are not impacting the surrounding neighborhood. Also included in the cost estimate is the preparation and submittal of a yearly report which would summarize the soil sample analytical results, discuss operational highlights and difficulties, and update the expected time frame to complete soil treatment.

For Alternative S&W2, activities associated with the removal, dust suppression, transportation, and disposal of listed hazardous waste would be covered by RCRA. Additionally, confirmation sampling and analysis of the open excavation and treated landfarm soils would also be performed

to ensure that characteristic hazardous waste was not placed in the landfarm cell, and to identify whether any characteristic hazardous waste was left in place. These activities are governed by RCRA, and the pertinent sections of RCRA that cover these activities are considered to be ARARs for this alternative. Excess stormwater runoff, which may be discharged to the local sanitary sewer system, would be covered by the Publicly Owned Treatment Works (POTW) requirements as set forth by the Granite City Wastewater Department, which are considered to be an ARAR. While TACO is not an ARAR, the CUOs are to be considered for this alternative.

As noted above, EPA's RCRA guidance states that though a contaminated medium may exhibit characteristics of a hazardous waste, it is not considered a hazardous waste until it is excavated. It is the intent of the removal action to reduce risk associated with contaminated site soils and to remove known listed hazardous waste from the site, followed by disposal at an appropriately licenced off-site facility. Additionally, TCLP analysis indicates that surface soils, subsurface soil, and sediments at the site do not exhibit characteristics of a hazardous waste. Therefore, RCRA closure and post-closure requirements and the Treatment Surface Impoundment Exemption (35 IAC 728.104) do not apply. Since confirmation sampling and analysis of the open excavation and excavated soils will be performed to ensure that hazardous waste will not be placed in the landfarm cell, 35 IAC 728.104, the Treatment Surface Impoundment Exemption, would not be considered an ARAR. Additionally, the soil treated in the landfarm cell will be tested prior to its removal to ensure that cleanup objectives have been meet and that the material does not meet the RCRA definition of a characteristic hazardous waste. Therefore, statutory requirements of 35 IAC 808 through 815, which cover solid waste disposal requirements, would not be considered ARARs.

Alternative S&W 3: Low-Temperature Thermal Desorption

Time to Implement: 6 years

In this alternative, contaminated soil would be excavated and transported to a soil stockpile area located south of 22nd Street, followed by desorption of contaminants from the soils in a mobile low-temperature thermal desorption (LTTD) unit. Per EPA's Presumptive Remedies for Soils, Sediments, and Sludges at Wood Treater Sites, LTTD is an EPA-recommended technology for wood treater sites (EPA 1995b). This process involves heating soils containing organic contamination in a heated chamber, thereby volatilizing the moisture and organic contaminants. LTTD desorbs the organic compounds in the soil without reaching combustion temperature. Inorganic compounds are not treated with this technology. As with the landfarming alternative, the treated soil would be graded to final contours across the site.

Air permits would be required to operate the LTTD unit. With LTTD treatment, there is a potential for some contaminants with volatilization temperatures above the LTTD operating temperatures to remain in the soil/waste mixture. The LTTD system is designed to treat organic contaminants with boiling points less than 800°F, and soil with less than 10% total organics and moisture.

During treatment activities, air monitoring would be conducted pursuant to OSHA and National Emission Standard for Hazardous Air Pollutants (NESHAP) regulations to ensure that workers and the public are not exposed to site contamination above allowable levels. Air emission standards and potentially required air pollution control equipment could become a substantial cost and performance factor for on-site LTTD.

Based on the soil volumes requiring treatment, and an overall average feed rate of 2 tons per hour, it is estimated that this alternative would require approximately six years to complete.

The LTTD cost estimate assumes that confirmation samples would be collected at the rate of one per week, for a total of 52 samples annually that would be analyzed for COPCs. In addition, air samples would be collected monthly from one upwind and two downwind monitoring points to determine emission concentrations from the LTTD unit operations.

ARARs for Alternative S&W3 include RCRA regulations for the removal, dust suppression, transportation, and disposal of listed hazardous waste; and 35 IAC Subtitle B for air permitting of the off-gas from and operation of pollution-control devices for the LTTD unit. Since confirmation sampling of the excavation will be performed to ensure that hazardous waste will not be treated by the LTTD process, 35 IAC 728.104, the Treatment Surface Impoundment Exemption, would not be considered an ARAR. Additionally, the soil treated by the LTTD unit will be tested prior to its placement back in the open excavations to ensure that cleanup objectives have been met and that the material does not meet the RCRA definition of a characteristic hazardous waste. Therefore, statutory requirements of 35 IAC 808 through 815, which cover solid waste disposal requirements, would not be considered ARARs. While TACO is not an ARAR, the CUOs are to be considered for this alternative.

Alternative S&W 4: Off-Site Disposal

Time to Implement: 1 year

In this alternative, all the contaminated soil would be excavated, loaded into trucks, and transported to an appropriate off-site hazardous waste treatment, storage, and disposal (TSD) facility for disposal. The excavated areas would then be backfilled with clean soil and seeded.

F-listed hazardous waste identified at the site would be transported to an offsite disposal TSD facility for incineration and disposal. Off-site disposal of wastes would be subject to RCRA requirements and to IEPA's off-site disposal policy. Because the contaminated soils and wastes would be disposed off site, there would be no post removal site control (PRSC) activities or institutional controls associated with this alternative. It is estimated that this alternative would take one year to complete.

ARARs for Alternative S&W4 are the same as those for Alternative S&W2 with the following exception. The excavated soils will be classified as either a listed or characteristic hazardous waste. Therefore, statutory requirements of 35 IAC 808 through 815, which cover solid waste

disposal requirements, would be considered ARARs. Finally, TCLP results from the site investigation indicated that surface soil, subsurface soil, and sediments are not characteristic hazardous wastes. Based on the analytical results and the previously mentioned EPA RCRA guidance for soils left in place, RCRA closure and post-closure requirements, and the Treatment Surface Impoundment Exemption (35 IAC 728.104) do not apply.

Operable Unit 2: Non-Aqueous-Phase Liquids

Alternative NAPL 1: Hot Water and Steam Flushing

Time to Implement: 4 years

This technology uses hot water and steam to displace and carry NAPLs to a point where they can be collected. In this process, injection and extraction wells are installed in an area contaminated with NAPLs. Steam is injected below the NAPLs, and condenses, causing rising hot water to displace the NAPLs to the extraction wells. Hot water is also added to the subsurface above the steam to further displace the NAPLs. The collected groundwater and NAPLs are processed through an oil/water separator with the oil being collected and the majority of the water being reinjected. Any water that is not reinjected is treated (i.e., granular activated carbon or ex situ biodegradation) to pretreatment standards before being discharged to the local publicly owned treatment works.

The following assumptions were made in preparing the conceptual design:

- There are no tanks or usable equipment on site;
- Six injection wells and two extraction wells would be required, installed in a connected 5-spot pattern;
- Injection wells would be 6 to 8 inches in diameter, and would have three screened intervals (i.e., shallow, intermediate, and deep). The total injection rate would be a minimum of 90 gallons per minute (gpm);
- Extraction wells would be a minimum of 10 inches in diameter and screened through the entire contaminated interval. The total extraction rate would be 10% to 20% greater than the injection rate (i.e., 99 to 108 gpm);
- Five monitoring wells would be required for temperature and water level measurements; and
- Services needed for operating the system would include 480-volt, 3-phase electrical

service, natural gas or propane for the heater, a small building or shed to house equipment, and an office trailer.

The time required until the process has achieved a point of diminishing returns (i.e., volume recovered compared to operating expenses) is estimated to be between three and four years.

ARARs associated with Alternative NAPL1 include SDWA; Title 35 IAC, Part 620, Groundwater Quality; and 40 CFR Part 145 as administered by IEPA's underground injection control (UIC) program. Additionally, the recovered NAPLs will have to be disposed of off site. Depending upon the analytical results, the NAPLs will be classified as either a characteristic hazardous waste or a special waste. Therefore, either RCRA disposal regulations or statutory requirements of 35 IAC 808 through 815, which cover solid waste disposal, would be the governing ARAR for waste disposal.

Alternative NAPL 2: Surfactant Flushing

Time to Implement: 4 years

Surfactants are chemical compounds which have the ability to make NAPLs more mobile in water. In surfactant flushing, a surfactant is injected into the NAPLs as part of a solution. The intent is to mobilized this NAPLs to a point where it can be more readily removed from the groundwater. Use of this method for NAPLs treatment is considered to be an emerging technology and not a proven "off the shelf" technology. No full-scale application of surfactant flushing for which information is readily available.

A significant level of effort is required to properly design a surfactant flood. The choice of surfactant at one site may differ significantly from that at another site given variations in contaminant types, geology, and groundwater flow. Typically, a number of laboratory tests need to be carried out as part of the design effort, followed by pilot-scale testing at the site. It is not uncommon to screen the performance of up to 100 different surfactants prior to final selection for a site.

At present, there have been no full-scale applications of surfactant flushing for which information is readily available. Consequently, the technology is regarded as an emerging and not a proven or "off the shelf" technology. However, the time to full-scale application of this technology appears to be short. For this reason, surfactant flushing has been included as a potential NAPLs removal alternative for the Jennison-Wright site.

The amount of time required to complete surfactant flushing depends on a number of factors, including the permeability of the subsurface materials, spacing of injection and recovery points, the number of pore volumes required, and the degree of mass removal that is required. The time required for surfactant flushing is thought to be similar to that of Alternative NAPLs 1 (three to four years).

The ARARs for Alternative NAPLs 2 are identical to those for Alternative NAPLs 1.

Operable Unit 3: Groundwater (GW)

In addition to NAPLs removal, the following alternatives were explored to address shallow and intermediate groundwater contamination present within the 22nd Street lagoon and PCP process area plumes. The NAPLs removal system, in conjunction with the following groundwater treatment alternatives, forms a long-term groundwater treatment system to address both on-site and off-site groundwater contamination.

The concentrations of COPCs in the other areas of groundwater contamination identified at the site are much lower than in these two plumes. Therefore, these other areas of groundwater contamination will be allowed to naturally attenuate, as described below.

Alternative GW 1: Natural Attenuation

Time to Implement: 100 years

Natural attenuation makes use of natural biodegradation processes to reduce the concentration and amount of pollutants at contaminated sites. Natural attenuation, also referred to as bioattenuation or intrinsic bioremediation, is an in situ treatment method. Natural attenuation is often used as one part of a site cleanup that also includes the control or removal of the sources of the contamination.

The processes that contribute to natural attenuation are typically acting at many sites, but at varying rates and degrees of effectiveness, depending on the types of contaminants present, and the physical, chemical, and biological characteristics of the soil and groundwater. Natural attenuation processes may reduce contaminant mass (through destructive processes such as biodegradation and chemical transformations); reduce contaminant concentrations (through simple dilution or dispersion); or bind contaminants to soil particles, reducing the amount of chemical contaminant migration (adsorption).

The effects of dilution and dispersion appear to reduce contaminant concentration but do not destroy the contaminants. Relatively clean rainwater and snow melt from the ground surface can seep underground to mix with and dilute contaminated groundwater. Clean groundwater from an upgradient location flowing into contaminated areas, or the dispersion of pollutants as they spread out away from the main path of the contamination plume, also leads to reduced concentrations of contaminants in a given area.

In certain situations, natural attenuation is an effective, inexpensive cleanup operation and the most appropriate way to remediate some contamination problems. Natural attenuation is sometimes mislabeled as a "no action" approach. However, natural attenuation is really a proactive approach that focuses on the confirmation and monitoring of natural remediation

processes rather than relying totally on engineered technologies. Natural attenuation is non-invasive, and, unlike many elaborate mechanical site cleanup techniques, while natural attenuation is working below the ground, the land surface above ground may be used. Natural attenuation is less costly than engineered treatment options, and requires no energy source or special equipment. The biggest drawback of this technology is the long period of time required achieve CUOs. Based on the high levels of contamination present in the 22nd Street lagoon and PCP process area plumes, a time period of 50 to 100 years, at a minimum, would likely be required to achieve CUOs.

It is likely that a lesser period of time would be required to achieve CUOs in the other areas of on-site groundwater contamination. Appendix K (Biofeasibility Study Report) of the EE/CA gives sufficient detail to justify the use of monitored natural attenuation for the less contaminated portions of the aquifer. Microbial counts were taken at several locations to verify the microbes' affinity for breaking down the contaminants of concern. It is estimated that at ten years past the beginning of construction that this portion of the remedy will be evaluated to determine its progress toward meeting remediation goals. Actual performance of the natural attenuation remedy will be carefully monitored in accordance with the monitoring plan to be developed as part of the site remedy design. If monitoring data indicate that contaminant levels do not continue to decline as estimated, Illinois EPA and USEPA will reconsider the remedy decision. One or more of the following observations could lead to re-consideration of the remedy, if confirmed by four or more rounds of sampling:

- Increase in levels of parent contaminants, indication that other sources may be present.
- Concentration levels of parent contaminants and/or daughter products differ significantly from modeling predictions

PRSC activities include the collection of groundwater samples on a quarterly or semiannual basis (semiannual sampling was assumed for cost estimating purposes) to monitor the progress of the natural attenuation.

ARARs associated with Alternative GW1 include SDWA and Title 35 IAC, Part 620, Groundwater Quality.

Alternative GW 2: Enhanced In Situ Bioremediation

Time to Implement: 20 years

Enhanced in situ bioremediation is a process that attempts to accelerate the natural biodegradation process by providing oxygen and nutrients to degrading microorganisms that may otherwise be limited in their ability to biodegrade contaminants.

The addition of oxygen can be achieved by either sparging air below the water table or circulating hydrogen peroxide throughout the contaminated groundwater zone. Additionally, solid-phase peroxide products (e.g., oxygen-releasing compound [ORC]) can also be used for oxygen enhancement and to increase the rate of biodegradation.

Oxygen Enhancement with Air Sparging. In this technique, air is injected under pressure below the water table to increase groundwater oxygen concentrations. A typical air sparing system has one or more subsurface points through which air is injected into the saturated zone. The air travels up through the saturated zone either in the form of air bubbles or as continuous air channels.

The three main contaminant-removal mechanisms that occur during the operation of air sparging systems include in situ stripping of dissolved organic contaminants, aerobic biodegradation of both dissolved and sorbed-phase contaminants resulting from the delivery of oxygen, and direct volatization of NAPLs. Implementation of air sparging is greatly influenced by the ability to achieve significant air distribution within the target zone. The presence of lower permeability layers will impede the vertical passage of injected air. Homogeneous geologic conditions, such as present at the Jennison-Wright site (with the exception of silts in certain areas of the shallow groundwater zone), are essential for the success of air sparging.

Oxygen Enhancement with Hydrogen Peroxide. During hydrogen peroxide enhancement, a dilute solution of hydrogen peroxide is circulated through the contaminated groundwater zone by pumping the solution into designated injection wells to increase the oxygen content of groundwater and enhance the rate of aerobic biodegradation of organic contaminants by naturally occurring microbes. However, because hydrogen peroxide is a strong oxidizer and can be dangerous if handled improperly, it is the least preferred method of oxygen enhancement.

Oxygen Enhancement with ORC. There are several methods for the introduction of ORC into the subsurface. In the most common method, ORC is placed into "socks," which are linked and lowered into a well. The ORC slowly releases oxygen to the groundwater flowing through the well. Another approach is to inject ORC directly into the aquifer by grouting techniques.

For the Jennison-Wright site, it appears that both air sparging and ORC could be used effectively for oxygen enhancement. For the groundwater contamination plume in the PCP process area, which extends vertically only to the intermediate depth of the aquifer (i.e., 50 to 60 feet BGS), ORC socks would be the preferred method of oxygen enhancement. Existing monitoring wells MW8S and MW8M would be used for sock placement. Also, eight to 12 additional monitoring wells (both shallow and intermediate) would be required in the PCP process area for sock placement. Exact well placements would be determined in the removal action design phase.

Deep groundwater exceedances of CUOs were detected in one groundwater monitoring well (MW5D) located in the 22nd Street lagoon area. Since there is the potential for the selected NAPLs removal alternative for this area to increase deep groundwater contamination, it was necessary to develop a groundwater alternative; air sparging would be the preferred technique.

This is especially true because the injection and extraction wells installed during the NAPLs removal phase could be converted to air sparging wells at the completion of removal. Additional smaller - diameter sparging points may also be required. Again, the determination of the exact number of air sparging points would be determined in the design phase.

Two nutrients required by microorganisms are nitrogen and phosphorus. The most common sources of nitrogen and phosphorus are ammonia and nitrate, and phosphates, respectively. These nutrients are typically introduced into the subsurface by pumping liquid forms into monitoring, injection, and/or extraction wells.

ARARs associated with Alternative GW2 include SDWA and Title 35 IAC, Part 620, Groundwater Quality. Since nutrients will be added to groundwater, 40 CFR Part 145, as administered by IEPA's UIC program, also is considered to be relevant and appropriate.

Alternative GW 3: Ex Situ Biological Treatment

Time to Implement: 10 years

Ex situ biological treatment uses bioreactors to degrade contaminants in water with microorganisms through suspended or attached biological systems, which are installed in an aboveground treatment building. In such a system, contaminated groundwater is removed from the subsurface by a series of extraction wells and pumped into the treatment building. There, the groundwater is treated, and discharged to the sanitary sewer or reinjected into the subsurface downgradient of the site's groundwater contaminant plumes.

ARARs associated with Alternative GW3 include SDWA and Title 35 IAC, Part 620, Groundwater Quality, and the POTW requirements as set forth by the Granite City Wastewater Department.

<u>Operable Unit 4: Buildings (B)</u>

Alternative B 1: Building and Foundation Removal

Time to Implement: 1 year

In order to obtain comprehensive soil removal alternative at the Jennison-Wright site, soils beneath the existing foundations of site structures will have to be addressed. Based on data obtained during the site investigation, it is likely that contaminants below these foundations exceed the established CUOs. Therefore, building demolition and removal of the concrete foundations must be performed in order to address the sub-floor soil contamination as part of any soil removal/treatment alternative. An estimated 1800 cubic yards of concrete foundations and slab materials would need to be addressed. The concrete floor slabs of the buildings and silos

would be decontaminated, crushed, and shipped offsite for disposal.

There are five buildings and two silos on site. The buildings are referred to as the office building, the white building, the green building, the boiler building, and the Transite building. The only known hazardous material associated with the buildings is RACM. To facilitate the implementation of the soil removal action at the site, RACM in the on-site buildings will be abated prior to demolition of the buildings and silos. For cost estimating purposes, it has been assumed that the concrete floor slabs of the buildings and silos would be decontaminated using high-pressure water washing, then crushed, and shipped off site for disposal. Any floor drains encountered during the demolition would be emptied, decontaminated, and shipped off site for disposal. The total estimated amount of concrete foundation or slab material on site is 1,801 cubic yards. Decontamination wash water used for concrete and drains would be treated by the proposed groundwater treatment system or containerized and shipped off site for disposal.

The total estimated amount of RACM on site is 181 linear feet on pipes, and 7,085 square feet on other structural components.

Because the total square footage on other structural components exceeds the exemption area of 160 square feet, the abatement and notification requirements of 40 CFR Part 61.145 paragraphs (b) and (c) would be applicable to the demolition of the Jennison-Wright structures.

RACM abatement is achieved through the appropriate selection of one or more of the following five accepted techniques: removal, encapsulation, encasement, enclosure, and repair. Because the on-site buildings would be demolished following the RACM abatement, removal of RACM is the abatement technique that should be used at the Jennison-Wright site. Of all the available abatement techniques, removal offers the most satisfactory long-term solution.

Before RACM abatement would begin, the work areas where RACM is present would be prepared in a manner that would protect human health and the environment. Since the disturbance of RACM during removal generates airborne asbestos fibers that may remain suspended in the air for a long time, work areas must be prepared to contain fibers during the entire removal process. A common method of containment is to install polyethylene sheeting on walls, the floor, and the ceiling. Construction of temporary walls using pine studs and polyethylene sheeting would likely be required.

Removed RACM (with the exception of the transite panels) would be placed into specially made disposal bags and transported to an off-site landfill for disposal. The transite panels, after being carefully removed from the walls of the Transite building to prevent the release of asbestos fibers, could be loaded directly into dump trucks for transport to the landfill.

The abatement of RACM at the Jennison-Wright site would be performed by a contractor trained and certified to perform this work, and under the supervision of IEPA and Granite City officials.

As stated in Section 4.2.1, the applicable ARAR for demolition of buildings with asbestos-containing material is 40 CFR Part 61.145.

Operable Unit 5: Miscellaneous Items (MI)

Alternative MI 1: Miscellaneous Items

Time to Implement: 1 year

The miscellaneous items OU is similar to the Buildings OU in that there are only two alternatives: removal and no action. Because the items listed in this category are structures and no treatment technologies are needed, only one alternative for managing these items is presented.

This group consists of the following items present on the site:

- Two empty underground storage tanks (USTs);
- Two above storage tanks (ASTs) that contain oil;
- An oil/water separator that contains rainwater;
- Rainwater and sediments present in the concrete basin;
- Several sumps and pits that contain oily waste;
- The collapsed pole barn;
- Scattered debris piles consisting of varying amounts of concrete, scrap metal, wood, and trash; and
- Steel tram rail.

As an integral part of the soil alternative, the ASTs, oil/water separator, and concrete basin should be incorporated into the site-wide removal action. These structures contain waste materials that could potentially be released, thereby contaminating remediated or clean soils. Additionally, soils beneath these structures have contaminant levels above the established CUOs. If the structures are left in place, contaminated soils still will remain on site at the completion of the soil removal alternative. The following removal methods are proposed for these structures.

The oil present in the two ASTs should be removed, containerized, and disposed of or recycled off site. The ASTs should then be cleaned and scrapped.

The rainwater present in the oil/water separator should be removed, passed through carbon, and discharged to the sanitary sewer system. Permission from the Granite City wastewater department would be required for this discharge, and a fee would be assessed. The oil/water separator should then be cleaned and scrapped.

Rainwater present in the concrete basin should be removed, passed through carbon, and discharged to the sanitary sewer. Sediments present in the concrete basin should be removed and handled in the same manner as the site's soils and wastes. For example, if the soils and wastes are to be treated in a landfarm, the concrete basin waste should be treated in the landfarm as well. Once emptied, the basin should be demolished and removed from the site.

Solid and sludge waste present in the sumps and pits should be removed and handled in the same manner as the site soils and wastes. The sumps and pits would then be demolished and removed from the site.

In order to gain access to surface and subsurface soils that contain contaminants above the CUOs, the debris piles, steel tram rails, and USTs should be removed. The removal method is as follows:

> The debris piles should be segregated into waste streams (i.e., steel, wood, concrete, and trash), with each waste stream being disposed of or recycled as appropriate;
>
> Steel tram rail should be excavated, cleaned to the extent feasible on an on-site decontamination pad, and either scrapped or disposed of off site; and
>
> The two empty USTs should be excavated, removed, cleaned, and scrapped. No residual fuel sludge appears to be present in the USTs.

COMPARATIVE EVALUATION OF ALTERNATIVES

Based upon the alternative evaluations conducted in the EE/CA, a site-wide remedial action alternative is proposed as the remedy for the site contamination. The selected alternative for remediating the Jennison-Wright site is an array of individual alternatives for each of the five operable units. Based upon analysis, this array of alternatives presents the best balance of trade-offs among the alternatives with respect to nine criteria that Illinois EPA and USEPA use to evaluate alternatives. This section profiles the performance of the selected alternative against the nine criteria, noting how it compares to the other options under consideration. Evaluation Tables at the end of the Analysis Portion display a comparison of the alternatives for each operable unit.

ANALYSIS

Overall Protection:
Overall protection of human health and the environment addresses whether each alternative provides adequate protection of human health and the environment and describes how risks posed through each exposure pathway are eliminated, reduced, or controlled, through treatment, engineering controls, and/or institutional controls.

Because the "no-action" alternative is not protective of human health and the environment, it is not considered further in this analysis as an option for this site.

All of the alternatives (with the exception of the "no-action" alternative and the natural attenuation groundwater alternative) provide varying degrees of protection of human health and the environment by eliminating, reducing, or controlling risk through treatment, engineering controls, or institutional controls.

For the "Soils and Waste" operable unit, the 24-inch permeable cover (Alternative S&W 1) alternative would provide adequate protection; however, it would merely cover the waste and contaminated soils on-site and would allow migration of the contaminants into the groundwater. Off-site disposal of the contaminated soils and wastes (Alternative S&W 4) would be protective of the residents, but would simply relocate the waste rather than reducing the toxicity of the contaminants. The landfarming alternative (Alternative S&W 2) and the Low Temperature Thermal Desorption (Alternative S&W 3) provide the highest degree of protectiveness because they address the toxicity of the material.

For the "NAPLs" operable unit, the hot water and steam flushing alternative (Alternative NAPL 1) and the surfactant flushing alternative (Alternative NAPL 2) differ primarily in the fluid used to displace the NAPLs. The use of surfactants is still an emerging technology and would require extensive bench and pilot scale testing to determine its effectiveness at this site. Alternative NAPL 1 has been used successfully at other wood-treating sites and has been determined to have a good probability of success at removing contamination at this site.

All three of the "Groundwater" alternatives are considered protective. Natural attenuation would likely occur at an unacceptably slow rate for the highly contaminated plumes. Both in situ and ex situ bioremediation would reduce the contaminant levels in the groundwater at a substantially higher rate than natural attenuation but ex situ remediation is the most aggressive of the three.

There are only two alternatives considered for each of the "Buildings" and "Miscellaneous Items" operable units. In order for any of the soil remedial objectives to be implemented, the buildings, foundations, and miscellaneous items must be removed. Therefore, no further analysis of the alternatives "B 1" and "MI 1" will be necessary.

Compliance with ARARs:

Section 121(d) of CERCLA and NCP Section 300.430(f)(1)(ii)(B) require that remedial actions at CERCLA sites at least attain legally applicable or relevant and appropriate Federal and State requirements, standards, criteria, and limitations which are collectively referred to as "ARARs," unless such ARARs are waived under CERCLA section 121(d)(4).

In the "Soils and Waste" operable unit, only the 24-inch cover alternative (Alternative S&W 1) does not meet ARARs, as waste would be left in place above cleanup objectives. Because it does not meet ARARs, it will be excluded from further consideration as an alternative. The Landfarming, LTTD, and the Off-Site Disposal alternatives would all meet ARARs.

Both alternatives for the "NAPLs" operable unit have the potential to achieve ARARs.

The "Groundwater" operable unit has three possible alternatives. Only the natural attenuation alternative would likely fail to meet ARARs as a potential remedy for the entire groundwater operable unit. For the least contaminated plumes, the monitored natural attenuation alternative will likely meet ARARs. Both the in situ and ex situ alternatives are expected to meet ARARs and thus will be carried forward in consideration.

The "Buildings" and "Miscellaneous Items" would consist of simple removal of primarily construction debris and would meet ARARs. The asbestos abatement portion of the removal in the Buildings alternative would need to meet the requirements of 35 Illinois Administrative Code Part 228.

Long-Term Effectiveness and Permanence:
Long-term effectiveness and permanence refers to expected residual risk and the ability of a remedy to maintain reliable protection of human health and the environment over time, once clean-up levels have been met. This criterion includes the consideration of residual risk that will remain onsite following remediation and the adequacy and reliablility of controls.

All three of the remaining "Soil and Waste" alternatives will provide both long-term effectiveness and permanence. In the case of the off-site disposal alternative, the local residents will be effectively protected as the contaminated soil would no longer be present on-site; however, the soil would be removed to another location and not actually treated to reduce contamination levels. Both the landfarming alternative and the LTTD alternative have a longer implementation period, but all three will be permanent solutions at the local level.

Both "NAPLs" alternatives have a high degree of both long term effectiveness because the actual contamination is being removed. Therefore, the level of permanence is also high as the contaminants would be physically removed from the site.

Both of the remaining "Groundwater" alternatives involve biological treatment. While ex situ biological treatment is more aggressive and would achieve cleanup objectives in the least amount of time, both will be effective and permanent in the long term. Both alternatives will degrade the contaminants to a level that will meet cleanup objectives.

Reduction of Toxicity, Mobility, or Volume Through Treatment:
Reduction of toxicity, mobility, or volume through treatment refers to the anticipated performance of the treatment technologies that may be included as part of a remedy.

Of the three remaining "Soil and Waste" alternatives, only the Off-Site Disposal alternative does not reduce the toxicity and volume of the contaminants through treatment. Disposal would reduce the mobility as the material would be removed from the site to a disposal facility where it would remain in a more controlled environment. Both the Landfarming and LTTD treatment alternatives achieve the three criteria above as they would permanently destroy most of the contaminants in the soils. Both of these alternatives would require that the treated soils would remain on-site.

Both "NAPLs" alternatives would also reduce the level of toxicity, mobility and volume of the contaminants because the NAPLs would be physically separated from the groundwater and soils. The NAPLs would then be removed to a separate facility where it would be disposed of properly.

The "Groundwater" alternatives are similar in their treatment of the water, but different in how the treatment takes place. As both alternatives utilize biological treatment as a method to permanently transform the contaminants, the toxicity is most certainly reduced. Neither mobility nor volume are affected as the groundwater will not be removed from the site or redirected.

Short-Term Effectiveness:
Short-term effectiveness addresses the period of time needed to implement the remedy and any adverse impacts that may be posed to workers, the community and the environment during construction and operation of the remedy until cleanup levels are achieved.

Of the "Soil and Waste" alternatives, the off-site removal alternative has the shortest period of exposure for both the workers and the surrounding community due to its relatively short implementation period (less than one year) for the entire removal to take place. Both the LTTD and landfarming alternatives take considerably longer to implement but the excavations made will be on an intermittent basis. All the soil and waste alternatives will have a slightly elevated risk of inhalation exposure during the excavation performed.

Among the remaining "NAPLs" alternatives, both alternatives offer the same possibility for effectiveness in the short term. The surfactant flushing alternative would take longer to implement, however as extensive bench and pilot scale studies would need to be performed. In addition, both alternatives provide the same low potential for adverse human health and environmental impacts as the actions occur largely underground.

Ex situ biological treatment is the most aggressive of the two remaining groundwater cleanup alternatives. If implemented, this alternative would achieve groundwater CUOs in the shortest period of time. However, this alternative has a larger above ground component (the above ground treatment building) and would take longer to implement because of the extent of the bench and pilot-scale testing required. The in situ treatment alternative could be implemented in

a shorter amount of time but would take longer to achieve the final cleanup objectives. There would be a minimal above ground component.

The "Buildings" and "Miscellaneous Items" alternatives would require demolition and would likely cause minor local disruption due to the operation of demolition equipment. Each of these would slightly increase the risk of inhalation of contaminated dust during the demolition.

Implementability:
Implementablility addresses the technical and administrative feasibility of a remedy from design through construction and operation. Factors such as availability of services and materials, administrative feasibility, and coordination with other governmental entities are also considered.

In the "Soils and Waste" operable unit, there are few physical and administrative difficulties that would delay implementation of the landfarm, LTTD, or off-site removal alternatives. Both the landfarm and LTTD alternatives have longer planning and construction elements associated with them while the off-site removal can be implemented in fairly short order.

Among the NAPL alternatives, the hot water and steam flushing alternative is most easily implemented as it is a proven technology having been used successfully at other wood-treater sites. The surfactant flushing alternative is more problematic with extensive bench and pilot scale studies being necessary to properly develop the treatment system.

The enhanced in situ biological treatment alternative is easier to implement than the ex situ biological treatment. With the ex situ treatment, there is a need for extensive bench and pilot scale testing before treatment could be done. In addition, it is more demanding from an equipment standpoint than in situ treatment. Treated water would also need to be addressed in an ex situ treatment process. The buildings and miscellaneous items demolition could be easily carried out with equipment readily available.

Cost:
The costs for the various alternatives are given along with the descriptions of each individual alternative. There are considerable differences in the prices for the alternatives within each operable unit. Note that some of the alternatives may have a relatively large capital (initial) cost but a small yearly operating cost; or an alternative may have a small capital cost but a relatively large operating cost. The most effective way of evaluating these costs is to use the alternatives' "present worth."

State Acceptance:
The State of Illinois Environmental Protection Agency and the United States Environmental Protection Agency concur with the selected remedy.

Community Acceptance:
The surrounding community accepts the remedy selected. The reaction to the remedy is further described in the Responsiveness Summary at the end of this Record of Decision.

Operable Unit 1: Soils and Waste (S&W)

Evaluation Criteria	Alternative S&W 1	Alternative S&W 2	Alternative S&W 3	Alterna S&W
Overall protection of human health and environment	○	●	●	●
Compliance with ARAR's	✖	●	●	●
Long-term effectiveness and permanence	○	●	●	●
Reduction of toxicity, mobility, or volume through treatment	○	●	●	●
Short-term effectiveness	●	●	●	●
Implementability	●	●	●	●
Cost (Present Worth)	$2,060,000	$3,540,000	$15,680,000	$14,870,
State Acceptance	✖	●	●	●
Community Acceptance	●	●	●	●
Other:				
Annual Operating Cost	$32,000	$407,000	$3,518,000	$0
Time to Implement	12 months	6 years	6 years	1 yea

** Community Acceptance of the recommended alternative will be evaluated after the public comment period.

● Fully meets criteria

○ Partially meets criteria

✖ Does not meet criteria

Operable Unit 2: Non-Aqueous-Phase Liquids (NAPL)

Evaluation Criteria	Alternative NAPL 1	Alternative NAPL 2
Overall protection of human health and environment	●	●
Compliance with ARAR's	●	●
Long-term effectiveness and permanence	●	●
Reduction of toxicity, mobility, or volume through treatment	●	●
Short-term effectiveness	●	○
Implementability	●	●
Cost (Present Worth)	$3,570,000	$3,930,000
State Acceptance	●	●
Community Acceptance	●	●
Other:		
Annual Operating Cost	$597,000	$666,000
Time to Implement	4 years	4 years

** Community Acceptance of the recommended alternative will be evaluated after the public comment period.

● Fully meets criteria

○ Partially meets criteria

✖ Does not meet criteria

Operable Unit 3: Groundwater (GW)

Evaluation Criteria	Alternative GW 1	Alternative GW 2	Alternative GW 3
Overall protection of human health and environment	✖	●	●
Compliance with ARAR's	✖	●	●
Long-term effectiveness and permanence	✖	●	●
Reduction of toxicity, mobility, or volume through treatment	✖	●	●
Short-term effectiveness	✖	●	●
Implementability	●	●	●
Cost (Present Worth)	$1,810,000	$2,660,000	$3,080,000
State Acceptance	✖	●	●
Community Acceptance	●	●	●
Other:			
Annual Operating Cost	$118,000	$150,000 (Years 1-3) $186,000 (Years 4-20)	$239,000
Time to Implement	100 years	20 years	10 years

** Community Acceptance of the recommended alternative will be evaluated after the public comment period.

● Fully meets criteria

○ Partially meets criteria

✖ Does not meet criteria

Operable Unit 4: Buildings (B)

Evaluation Criteria	Alternative B 1
Overall protection of human health and environment	●
Compliance with ARAR's	●
Long-term effectiveness and permanence	●
Reduction of toxicity, mobility, or volume through treatment	●
Short-term effectiveness	●
Implementability	●
Cost (Present Worth)	$368,000
State Acceptance	●
Community Acceptance	●
Other:	
Annual Operating Cost	N/A
Time to Implement	1 year

** Community Acceptance of the recommended alternative will be evaluated after the public comment period.

● Fully meets criteria

○ Partially meets criteria

✖ Does not meet criteria

Operable Unit 5: Miscellaneous Items (MI)

Evaluation Criteria	Alternative MI 1
Overall protection of human health and environment	●
Compliance with ARAR's	●
Long-term effectiveness and permanence	●
Reduction of toxicity, mobility, or volume through treatment	●
Short-term effectiveness	●
Implementability	●
Cost (Present Worth)	$275,000
State Acceptance	●
Community Acceptance	●
Other:	
Annual Operating Cost	N/A
Time to Implement	1 year

** Community Acceptance of the recommended alternative will be evaluated after the public comment period.

● Fully meets criteria

○ Partially meets criteria

✖ Does not meet criteria

PRINCIPAL THREAT WASTES

The NCP establishes an expectation that USEPA will use treatment to address the principal threats posed

by a site wherever practicable (NCP Section 300.430(a)(1)(iii)(A)). Identifying principal threat wastes combines concepts of both hazard and risk. In general, principal threat wastes are those source materials considered to be highly toxic or highly mobile which generally cannot be contained in a reliable manner or would present a significant risk to human health or the environment should exposure occur. Conversely, non-principal threat wastes are those source materials that generally can be reliably contained and that would present only a low risk in the event of exposure. The manner in which principal threats are addressed generally will determine whether the statutory preference for treatment as a principal element is satisfied.

Wastes that generally will be considered to constitute principal threats include, but are not limited to, the following:

- **Liquid source material** - waste contained in drums, lagoons or tanks, free product in the subsurface (i.e., NAPLs) containing contaminants of concern (generally excluding groundwater).

- **Mobile source material** - surface soil or subsurface soil containing high concentrations of chemicals of concern that are (or potentially are) mobile due to wind entrainment, volatilization (e.g., VOCs), surface runoff, or subsurface transport.

- **Highly-toxic source material** - buried drummed non-liquid wastes, buried tanks containing non-liquid wastes, or soils containing significant concentrations of highly toxic materials.

Wastes that generally will not constitute principal threats include, but are not limited to, the following:

- **Non-mobile contaminated source material of low to moderate toxicity** - surface soil containing chemicals of concern that generally are relatively immoblile in air or ground water (i.e., non-liquid, low volatility, low leachability contaminants such as high molecular weight compounds) in the specific environmental setting .

- **Low toxicity source material** - soil and subsurface soil concentrations not greatly above reference dose levels or that present an excess cancer risk near the acceptable risk range were exposure to occur.

The major factors controlling the estimated risks for the Jennison-Wright site are:

- The presence of dioxins/furans and carcinogenic PAHs in site soils and potential exposures to current site visitors and future site workers;

- The presence of PCP in groundwater in the PCP process area, and the presence of carcinogenic PAHs, benzene, PCP, arsenic, 2,4-dimethylphenol, 2-methylphenol, and naphthalene in groundwater at the 22nd Street lagoon, coupled with the possible future use of groundwater as a drinking water source; and

- The presence of benzene and naphthalene in subsurface soils and the potential future short-term

inhalation exposures of workers and nearby residents during periods of excavation/construction on the site.

SELECTED REMEDY

- For site wastes consisting of the drip track residue and the oils found on-site, the selected alternative is to remove the waste and have it disposed at a hazardous waste facility. An estimated 300 cubic yards of soil will be excavated and removed from the site.

- For site soils, a landfarm will be constructed in the northeast portion of the site **(Alternative S&W 2)**. A landfarm is selected over a soil cover because it is more protective of human health and the environment and over the other alternatives because of cost considerations. An estimated 55,000 cubic yards of soil will be treated over a five year period.

- For NAPLs removal, hot water and steam flushing **(Alternative NAPLs 1)** is selected over surfactant flushing because it is a more proven technology. An estimated 200,000 gallons of NAPLs will be removed and treated.

- For the more highly contaminated groundwater plumes, the selected alternative is enhanced in situ biological treatment using ORC and air sparging **(Alternative GW 2)** rather than natural attenuation and ex situ biological treatment. Natural attenuation is not considered an aggressive enough approach and ex situ biological treatment involves a greater level of design, construction, and annual operating cost than in situ biological treatment. Natural attenuation **(Alternative GW 1)** is the selected alternative for the other areas of the site where the groundwater contamination is at a much lower level.

- The buildings and other structures on the site will be razed and the asbestos-containing materials inside will be abated. **(Alternative B 1)** An estimated 180 liner feet of pipe insulation and 7000 square feet of surface insulation will be abated and 1800 cubic yards of foundations will be removed.

- The selected alternative for the "Miscellaneous Items" category is to remove the remaining miscellaneous items (debris piles, storage tanks, abandoned steel trams and several sumps and pits) that litter the site. **(Alternative MI 1)**

Cost Estimate

The information in the following cost estimate summary table is based on the best available information regarding the anticipated scope of the remedial alternative. Changes in the cost elements are likely to occur as a result of new information and data collected during the engineering design of the remedial

alternative. Major changes may be documented in the form of a memorandum in the Administrative Record file, an Explanation of Significant Differences, or a ROD amendment. This is an order-of-magnitude engineering cost estimate that is expected to be within +50 to -30 percent of the actual project cost.

SITE WIDE COST ESTIMATE			
Alternative	**Capital Costs**	**Present Worth PRSC* Costs**	**Estimated Total Present Worth Cost**
Common Items	$ 577,000.00	N/A	$ 577,000.00
Removal and Disposal of Hazardous Wastes	$ 400,000.00	N/A	$ 400,000.00
Landfarm (S&W 2)	$ 1,481,000.00	$ 1,762,000.00	$ 3,243,000.00
Hot Water and Steam Flushing (NAPL 1)	$ 1,309,000.00	$ 2,117,000.00	$ 3,426,000.00
Enhanced In Situ Bioremediation (GW 2)	$ 349,000.00	$ 2,151,000.00	$ 2,500,000.00
Building Abatement and Demolition	$ 219,000.00	N/A	$ 219,000.00
Removal of Miscellaneous Items	$ 145,000.00	N/A	$ 145,000.00
Total Cost	**$ 4,480,000.00**	**$ 6,030,000.00**	**$ 10,510,000.00**

* Post Remedial Site Control
An annual discount rate of 5% was assumed for calculating present worth cost.

EXPECTED OUTCOME FOR SELECTED REMEDY

It is expected that exposure to site contaminants will be controlled by:

- Treatment on-site of contaminated soils;
- Removal of RCRA listed hazardous wastes;
- Debris, and miscellaneous items;
- Removal and treatment of NAPLs; and
- Treatment of groundwater.

Through this approach, it is anticipated that this site will be returned to a usable state for redevelopment as a commercial/industrial facility. The anticipated duration of each portion of the selected remedy reflects preliminary estimates of construction time and is shown in the alternatives portion of this Record of Decision.

STATUTORY DETERMINATIONS

Under CERCLA section 121 and the NCP, the lead agency must select remedies that are protective of human health and the environment, attain Federal and State requirements that are applicable or relevant and appropriate for this remedial action (or invoke an appropriate waiver), are cost-effective, and utilize permanent solutions and alternative treatment technologies (or resource recovery) to the maximum extent practicable. In addition, CERCLA includes a preference for remedies that employ treatment that permanently and significantly reduces the volume, toxicity, or mobility of hazardous wastes as a principal element and a bias against off-site disposal of untreated wastes.

Protection of Human Health and the Environment

The selected array of alternatives will protect human health and the environment through the treatment of on-site soils and groundwater, removal of RCRA listed hazardous wastes, debris, and miscellaneous items, and treatment of the NAPLs on site. By treating the NAPLs and soils, sources of contamination, this remedy will prevent the existing groundwater plumes from migrating further and return the water to drinking water standards. Soil treatment will reduce the current cancer risks associated with the soils to 10^{-5} level which is within USEPA's target range of 10^{-4} to 10^{-6}. Groundwater will be treated to a risk level of 10^{-6}.

Compliance with Applicable or Relevant and Appropriate Requirements

The selected remedy of landfarming the contaminated soils, removal of RCRA listed wastes, collection and treatment of NAPLs, air sparging and biotreatment of groundwater, and demolition and removal of site buildings and miscellaneous items comply with all ARARs. The ARARs identified are presented below.

- **Part 620—Groundwater Quality.** Title 35 of the Illinois Administrative Code (IAC), Part 620, entitled Groundwater Quality, prescribes various aspects of groundwater quality in Illinois. Part 620 includes methods of classifying groundwater (Class I through Class IV), nondegradation provisions, standards for the quality of groundwater, and procedures and protocols for the management and protection of groundwater. A groundwater management zone (GMZ) may be established within any class of groundwater as a three-dimensional region containing groundwater being managed to mitigate impairment caused by the release of contaminants from a site.

- **Safe Drinking Water Act.** The SDWA of 1974 establishes a federal program to monitor and increase the safety of all commercially and publicly supplied drinking water supplies. Congress amended the SDWA in 1986, mandating changes in nationwide safeguards for drinking water and establishing new federal enforcement responsibility on the part of EPA. The 1986 amendments required EPA to establish MCLs, Maximum Contaminant Level Goals (MCLGs), and Best Available Technology (BAT) treatment techniques for organic, inorganic, radioactive, and

microbial contaminants in drinking water.

- **Resource Conservation and Recovery Act (RCRA).** RCRA was enacted in 1976 as an amendment to the Solid Waste Disposal Act to ensure the proper management of solid wastes. The broad goals set by RCRA are:

  To protect human health and the environment from the hazards posed by waste disposal;

  To conserve energy and natural resources through waste recycling and recovery;

  To reduce or eliminate the amount of waste generated, including hazardous waste, as expeditiously as possible; and

  To ensure that wastes are managed in a manner that is protective of human health and the environment.

  RCRA consists of three distinct yet interrelated programs in order to achieve these goals. RCRA Subtitle C, the hazardous waste program, establishes a management system that regulates hazardous waste from the time it is generated until its ultimate disposal. The system establishes requirements for hazardous waste identification; generators; transporters; treatment, storage, and disposal (TSD) facilities; hazardous waste recycling; land disposal restrictions; combustion; permitting; corrective action; enforcement; and state authorization. IEPA has determined that approximately 300 cubic yards of soil directly underneath the drip tracks contains waste materials from the wood-treating operations at the Jennison-Wright site and will be considered an F-listed hazardous waste (F032 and F034). The management of this material (removal and off-site incineration at an appropriately permitted facility) will be conducted in accordance with RCRA Subtitle C.

Groundwater Reinjection. Several of the removal action alternatives include the reinjection of extracted groundwater into the subsurface. In Illinois, EPA Region 5 classifies and regulates injection wells. EPA's UIC branch has five classes of injection wells. An injection well that is part of a groundwater treatment system would be a Class I injection well. EPA has delegated primary regulatory authority of the UIC program to the State of Illinois because Illinois has demonstrated the ability to implement a UIC program that meets the EPA requirements found in 40 CFR Part 145. If the design document prepared for the removal action at the Jennison-Wright site includes groundwater reinjection, approval from IEPA's UIC division would need to be obtained.

Demolition. Prior to the demolition of the on-site buildings, razing permits will need to be obtained from the Granite City building inspector's office. One permit would be required for each of the structures to be demolished.

Asbestos. Per 40 CFR Part 61 (the National Emission Standard for Asbestos), the owner of a structure planned for demolition must thoroughly inspect the structure for the presence of ACM. This inspection

was conducted by E & E as part of the EE/CA support sampling. ACM is categorized into three categories:

- **Category I nonfriable**
- **Category II nonfriable**
- **Friable**

The asbestos standard for demolition in presented in 40 CFR Part 61.145. The standard consists of: (a) Applicability, (b) Notification requirements, and (c) Procedures for asbestos emission control. Based upon the amount of RACM present in a demolition project, paragraph (a) differentiates between those projects that must comply with both paragraphs (b) and (c), and those projects that need only comply with certain notification requirements in paragraph (b).

RACM is defined as:

- Friable ACM;
- Category I nonfriable ACM that has become friable, or that will be or has been subjected to sanding, grinding, cutting, or abrading; and
- Category II nonfriable ACM that has a high probability of becoming or has become crumbled, pulverized, or reduced to powder by the forces expected to act on the material in the course of demolition.

An owner of a demolition project must comply with both paragraphs (b) and (c) if the combined amount of RACM is at least 260 linear feet on pipes or at least 160 square feet on other structural components. An owner of a demolition project must comply only with certain notification requirements of paragraph (b) if the combined amount of RACM is less than 260 linear feet on pipes and less than 160 square feet on other structural components.

For the Jennison-Wright site, there are less than 260 linear feet of RACM on pipes, but there are more than 160 square feet of RACM on other structural components. Therefore, the demolition of the site buildings would need to comply with both paragraphs (b) and (c).

Other Criteria, Advisories, or Guidance To Be Considered (TBCs)
In implementing the selected remedy, IEPA has considered an additional non-binding criterion that is considered to be a TBC.

TACO. Title 35 IAC, Part 742, entitled Tiered Approach to Corrective Action Objectives (TACO), is the IEPA's method for developing remediation objectives (hereafter referred to as CUOs) for contaminated soil and groundwater in Illinois. These CUOs protect human health and take into account site conditions

and land use. CUOs generated by TACO are risk-based and site-specific (IPCB 1997). TACO is considered a TBC requirement rather than an ARAR. According to IEPA, TACO cannot be an ARAR on Superfund sites since it is not legally enforceable. TACO, however, can be used as a screening tool, and Tier 1 cleanup values could be used as proposed cleanup goals for soil or water as part of a risk assessment. There are three tiers of CUOs in TACO.

A Tier 1 evaluation compares the concentration of contaminants detected at a site to the corresponding CUOs contained in "look-up" tables. These CUOs are based on simple, conservative models. To complete a Tier 1 evaluation, the following must be known:

- The extent and concentrations of contaminants of concern for both soil and groundwater;
- The groundwater classification as defined in 35 IAC Part 620; and
- The intended land use at the site (either residential or industrial/commercial).

If CUOs are based on an industrial/commercial land use, then an institutional control prohibiting the property from residential use would be imposed by IEPA (IEPA 1997).

A Tier 2 evaluation uses risk-based equations from Soil Screening Level (SSL) and Risk-Based Corrective Action (RBCA) approaches. In addition to the information that is required for a Tier 1 evaluation, the following information is considered:

- The physical and chemical properties of the contaminants;
- Site-specific soil and groundwater parameters (e.g., soil type, soil organic carbon content, hydraulic conductivity); and
- The application of institutional controls and engineered barriers.

The additional Tier 2 information can allow for the calculation of less stringent but equivalently protective CUOs as Tier 1.

A Tier 3 evaluation allows alternative parameters and factors, not available under a Tier 1 evaluation or a Tier 2 evaluation, to be considered when developing CUOs. Situations that can be considered for a Tier 3 evaluation include, but are not limited to:

- Modification of the input parameters used in risk assessment models not allowed under Tier 2;
- Use of different risk assessment models from those used in Tier 2;
- Use of additional site data to improve or confirm predictions of exposed receptors;
- Analysis of site-specific risks using formal risk assessment, probabilistic data analysis, and

sophisticated fate and transport models;

- The impracticality of further remediation;
- Incomplete human exposure pathway(s) not excluded under 35 IAC Part 742, Subpart C;
- Use of toxicological-specific information not available from the sources listed in Tier 2; and
- Land uses that are substantially different from the assumed residential or industrial/commercial property uses of a site.

The SRE performed for the Jennison-Wright site is the equivalent of a TACO Tier 3 evaluation.

Cost-Effectiveness
In the judgement of Illinois EPA, the selected remedy is cost-effective and represents a reasonable value for the money to be spent. In making this determination, the following definition was used: "A remedy shall be cost effective if its costs are proportional to its overall effectiveness."(NCP Section300.430(f)(1)(ii)(D)). This was accomplished by evaluation the "overall effectiveness" of those alternatives that satisfied the threshold criteria (i.e., were both protective of human health and the environment and ARAR-compliant). Overall effectiveness was evaluated by assessing three of the five balancing criteria in combination (long-term effectiveness and permanence; reduction in toxicity, mobility, and volume through treatment; and short-term effectiveness). Overall effectiveness was then compared to costs to determine cost-effectiveness. The relationship of the overall effectiveness of this remedial alternative was determined to be proportional to its costs and hence this alternative represents a reasonable value for the money to be spent.

The estimated present worth cost of the selected remedy is $10,510,000.

Utilization of Permanent Solutions and Alternative Treatment Technologies (or Resource Recovery Technologies) to the Maximum Extent Practicable
Illinois EPA has determined that the selected remedy represents the maximum extent to which permanent solutions and treatment technologies can be utilized in a practicable manner at the site. Of those alternatives that are protective of human health and the environment and comply with ARARs, Illinois EPA has determined that the selected remedy provides the best balance of trade-offs in terms of the five balancing criteria, while also considering the statutory preference for treatment as a principal element and bias against off-site treatment and disposal and considering community acceptance.

The Selected Remedy treats the source materials constituting principal threats at the site, achieving significant reductions in PNA and PCP concentrations in the soils and groundwater. The selected remedy satisfies other criteria for long-term effectiveness by permanently destroying the PNA and PCP contamination in the soil and groundwater. The selected remedy does not present short-term risks different from the other treatment alternatives. There are no special implementability issues that sets the selected remedy apart from any of the other alternatives evaluated.

Preference for Treatment as a Principal Element
By treating the contaminated soils and groundwater using biological treatment methods, the selected remedy addresses principal threats posed by the site through the use of treatment technologies. By utilizing treatment as a significant portion of the remedy, the statutory preference for remedies that employ treatment as a principal element is satisfied.

Five-Year Review Requirements
Because this remedy will result in hazardous substances, pollutants, or contaminants remaining on-site above levels that allow for unlimited use and unrestricted exposure, a statutory review will be conducted within five years after initiation of remedial action to ensure that the remedy is, or will be protective of human health and the environment.

JENNISON-WRIGHT CORPORATION SITE

GRANITE CITY, MADISON COUNTY, ILLINOIS

FINAL REMEDY

RESPONSIVENESS SUMMARY

September 1999

Table of Contents

	Page
Responsiveness Summary Overview	3
Site Location and History	3
Site Contamination	4
Summary of the Final Remedy	5
Public Hearing	6
Agency Responses to Questions	7
Comments From Public Hearing	13
For Further Information	14
Thanks to the Citizens Who Became Involved	14
Glossary	15

RESPONSIVENESS SUMMARY

Responsiveness Summary Overview

In accordance with CERCLA Section 117, 42 U.S.C. Section 9617, the Illinois Environmental Protection Agency (Illinois EPA) held a public comment period from July 30, 1999, through August 29, 1999, to allow interested parties to comment on the Proposed Plan (*July 1999*) for this site. The Proposed Plan identifies the cleanup alternatives and preferred option for the final remedy at the Jennison-Wright Corporation Superfund Site in Granite City, Illinois. The Proposed Plan was issued by the Illinois Environmental Protection Agency, the lead agency for site activities, and the United States Environmental Protection Agency (USEPA), the support agency for this remedial action. Illinois EPA, in consultation with the USEPA, has selected a final remedy for the site only now that the public comment period has ended and written and oral comments have been submitted.

The purpose of this responsiveness summary is to document the Agency's responses to questions, concerns, and comments received during the comment period and during the public hearing. These comments and concerns were considered prior to selection of the alternatives for the site. A complete copy of the Proposed Plan, Administrative Record, Engineering Evaluation/Cost Analysis (EE/CA) and other pertinent information are available at the Granite City Public Library, 2061 Delmar Avenue, Granite City, Illinois (618/452-6238).

Site Location and History

The Jennison-Wright Corporation site is made up of approximately 20 acres of land at 900 West 22nd Street within the corporate boundaries of Granite City, Madison County, Illinois. The facility is bordered by the Norfolk-Southern Railroad lines to the east and south, residential areas to the west and property occupied by the Illinois American Water Company, a residential area and 23rd Street to the north.

Operations at the facility began prior to 1921 and continued until 1989 with three separate companies operating at the site: Midland Creosoting Company (prior to 1921-1940), The Jennison-Wright Corporation (1940-1981) and 2-B-J.W., Inc (1981-1989), authorized to do business as Jennison-Wright Corporation. Jennison-Wright Corporation filed for Chapter 11 Bankruptcy in November 1989, with an auction held in 1990 to sell the remaining equipment and materials. The site has remained vacant since 1990 except for the occasional trespasser or scavenger.

The Jennison-Wright Corporation site is a triangular-shaped facility that is bisected

by 22nd Street, creating a north and south portion. The area north of 22nd Street, treating wood products (railroad ties and wood block flooring) with pentachlorophenol (PCP), creosote and zinc naphthenate. Creosote was used for treating wood products prior to 1921 to 1989. Pentachlorophenol was used from 1974 to 1985 and zinc naphthenate was used from 1985 to 1989.

Jennite (an asphalt sealer product composed of coal tar, pitch, clay, and water) was manufactured in the southeastern corner of the facility. The process began in the early 1960s and continued until the summer of 1986 when Jennison-Wright sold the Jennite process to Neyra Industries. Neyra Industries leased the portion of the facility used by Jennison-Wright for the sealer, and continued manufacturing the asphalt sealer until Jennison-Wright Corporation filed for Chapter 11 Bankruptcy in November 1989.

Site Contamination

While in operation, creosote and pentachlorophenol were allowed to spill onto the ground during the wood-treating process located south of 22nd Street. Soil contamination also resulted from creosote dripping from treated ties and blocks during transportation to wood storage areas located north of 22nd Street.

When the site was abandoned in 1989, large quantities of materials and hazardous waste, including above-ground storage tanks and railroad tank cars, were left on site. Years of wood-treating operations have also led to groundwater contamination. Preliminary residential soil sampling also has shown low levels of the same contaminants found on site.

Various stabilization efforts and removal projects have previously occurred at the Jennison-Wright site. However additional work still must be completed to address the remaining soil and groundwater contamination. The problems at the Jennison-Wright site are complex. As a result, Illinois EPA has divided the work into different manageable components called Operable Units (OUs). These are:

OU 1 Soils and Wastes: addresses the soils that have been contaminated by past site operations and the wastes that those operations left in place when the site went bankrupt.

OU 2 Non-Aqueous Phase Liquids (NAPLs): addresses the presence of *NAPLs*, which have been found in the northeast corner of the south section of the site.

OU 3 Groundwater: addresses the contaminated groundwater which is located throughout the site.

OU 4 Buildings: addresses the variety of different structures and their remnants which remain on-site. There are five buildings and two silos on-site.

QU 5 Miscellaneous Items: addresses the remaining miscellaneous items that consist of two underground storage tanks, two above ground storage tanks, an oil water separator, liquids and sediments in an on-site basin, the collapsed pole barn, several sumps and pits, scattered debris piles, and steel tram rails.

Summary of the Final Remedy

•For site wastes consisting of the drip track residue and the oils found on-site, the preferred alternative is to remove the waste and have it disposed at a hazardous waste facility.

•For site soils, a landfarm will be constructed in the northeast portion of the site.

•For NAPL removal, hot water and steam flushing will be used because it is a proven technology.

•For the more highly contaminated groundwater plumes, the preferred alternative is enhanced in situ biological treatment using Oxygen Released Compounds and air sparging.

•The buildings and other structures on the site will be razed and the asbestos-containing materials inside will be abated.

•The preferred alternative for the "Miscellaneous Items" category is to remove the remaining miscellaneous items (debris piles, storage tanks, abandoned steel trams and several sumps and pits) that litter the site.

Based on information available at this time, Illinois EPA and USEPA believe that this alternative will be protective of human health and the environment, will comply with applicable regulations, be cost effective, and will utilize permanent solutions and alternative treatment technologies or resource recovery technologies to the maximum extent practicable. The decision to implement this final remedy was made after written and oral comments were received during the public comment period.

Public Hearing

Illinois EPA solicited input from the community on the cleanup methods and proposed final remedy. Prior to the final remedy, the Illinois EPA was required to hold a minimum 30-day comment period to encourage public participation in the selection process. The comment period began on July 30, 1999, and ended on August 29, 1999. During this time a public hearing was held by the Illinois EPA at which the Remedial Investigation report and the Proposed Plan was presented, questions were answered, and both oral and written comments were accepted.

A notice of the public hearing was published in the Granite City Journal on July 18 and 25, and August 1, 1999. Letters and a notice of the hearing were sent to legislators, elected officials, and interested citizens on July 19, 1999. The notice was also placed on the Illinois EPA's web site home page.

The public hearing was held at the Granite City Township Hall, 2060 Delmar Avenue, on August 19, 1999, at 7:00 pm. Approximately 13 citizens and two local officials attended; representatives from the Illinois EPA and Ecology & Environment, Inc. (Illinois EPA contractors) were present. One newspaper reporter, representing Belleville News Democrat, was also present.

Agency Responses

Questions from Jennison-Wright Public Hearing

Remediation Issues

General Questions

When will the remediation work begin?

The Illinois EPA is currently waiting for the USEPA to provide us funding for this project. We are anticipating the money for the design portion of the final remedy by January 2000. The remedy will be designed over the winter months. If all goes well, the USEPA will provide us the $10.5 to implement the design and work should begin late Spring of 2000.

Will debris be hauled from this site to another site to be disposed of?

Liquid waste will be transported and disposed of at a hazardous waste incinerator in New Castle, Kentucky. Scrap metals will decontaminated on-site and will taken to a smelter. Contaminated soils will be treated, and a landfarm will be constructed on-site.

How will waste be transported off the site — railway or roadway?

Waste will be hauled off-site via trucks with liners; these trucks haul 20 cubic yards in a load.

Will the remediation project include the property between the railroad tracks and the Nestle factory?

Some. Groundwater flowing in the area of the railroad tracks and some soil in the area will be excavated.

Will the remediation project include the residential properties located nearby, specifically along Missouri Avenue?

It is not Illinois EPA's intention to excavate any residential soils. Past investigations indicated that residential soils are at a low enough risk to be below a level of concern for the residents along Missouri Avenue, the closest street to the site. This conclusion was drawn through health risk consultations with Illinois Department of Public Health, United States Protection Agency, and Illinois Environmental Protection Agency.

Will the processing facility in the northern part of the property be remediated as well?

Yes. Areas for soil and groundwater treatment have been already determined; this designated area should include the portion of the site which the Agency was questioned about.

How do you ensure your contractors do the remediation properly?

Ecology and Environment, Inc., the Illinois EPA's oversite contractor, will be there when

contractors are performing the work.

What is involved in cleaning up this site?

- *For site wastes consisting of the drip track residue and the oils found on-site, the preferred alternative is to remove the waste and have it disposed at a hazardous waste facility.*
- *For site soils, a landfarm will be constructed in the northeast portion of the site . A landfarm is preferred over a soil cover because it is more protective of human health and the environment and over the other alternatives because of cost considerations.*
- *For NAPL removal, hot water and steam flushing is preferred over surfactant flushing because it is a more proven technology.*
- *For the more highly contaminated groundwater plumes, the preferred alternative is enhanced in situ biological treatment using Oxygen Released Compounds and air sparging rather than natural attenuation and ex situ biological treatment.*
- *The buildings and other structures on the site will be razed and the asbestos containing materials inside will be abated.*
- *The preferred alternative for the "Miscellaneous Items" category is to remove the remaining miscellaneous items (debris piles, storage tanks, abandoned steel trams and several sumps and pits) that litter the site.*

Soil Remediation Questions

What is the soil cleanup process?

Soils which are contaminated above the Cleanup Objectives (CUOs) will be treated in an on-site landfarm treatment cell constructed on the northeastern portion of the site. Landfarming is an USEPA-recommended technology for treating contaminated soils found a wood-treater sites. In this landfarming cell, biodegradable contaminants are subjected simultaneously to the following processes: 1) bacterial and chemical decomposition, 2) leaching of water-soluble components, and 3) volatilization of some components of the original waste, as well as certain decomposition products. Only soils would be treated via this alternative. The landfarm treatment cell would consist of a compacted clay liner, drainage system, retention pond, water treatment and discharge system, moisture and nutrient addition equipment, and tilling equipment. Once the soil within the cell is remediated to the CUOs, the soil would be graded to final contours across the site.

Once you mobilize the contaminants in the soil, how can you control their migration?

"Mobilizing" contaminants in the soil is not part of the remediation. In addition, the contaminants in the soil are not readily mobile and do not tend to migrate easily. Controls used with the selected soil treatment which is being utilized ensures the contaminants do not migrate into the residential areas or move off-site.

Will digging and hauling soil leave large amounts of contaminated soils exposed and able to migrate off-site?

No. Dust suppression and runoff control measures will be maintained during all phases of the processes at the site.

What is used as the vegetative cover?

The type of vegetative cover has not yet been determined. It will be some form of hydro-seeding that will have good erosion control properties. It will not be sod.

Are you going to remove the soil on the north side of 22nd street?

We will remove and treat soil from the north portion of the site which is north of 22nd Street.

Will excavation of soil occur outside of the fence?

Some soil removal will occur outside of the fence. However, sampling indicates that there wasn't much drippage outside of the fenced area.

Is the soil contamination any farther down than 12 inches?

For the most part, contamination does not go any deeper than 12 inches. However, there are certain areas - like the Jennite pit (waste pit) - that contamination goes deeper. The on-site area known as the "22nd Street lagoon" will undoubtedly have contaminated soil deeper than 12 inches. All of this soil will be removed, landfarmed and treated until the cleanup levels are reached.

NAPL Questions

Could the hot water and steam treatment cause contaminants to move off-site to residential yards or private wells, specifically on Missouri Avenue?

No. The purpose of this action is to prevent such an occurrence. Wells will be specifically installed for the purpose of collecting contaminants that are mobilized during the process. Additionally, all of this action takes place well below ground surface and a considerable distance from Missouri Avenue. This procedure will be conducted in the northeast corner of the southern portion of the site.

This process uses hot water and steam to displace and carry NAPLs to a point where they can be collected. In this process, injection and extraction wells are installed in an area contaminated with NAPLs. Steam is injected below the NAPLs and condenses, causing rising hot water to displace the NAPLs to the extraction wells. Hot water is also added to the subsurface above the steam to further displace the NAPLs. The collected groundwater and NAPL are then put through an oil/water separator. The NAPL is then removed from the site and disposed of in an off-site facility.

What is done with the site once the clean up is complete.

It will be open for purchase by a prospective buyer for a commercial/industrial use.

What is done with cleaned up dirt?

Erosion control is provided, followed by a vegetative seeded cover of hydro-seed.

Some of the residential yards have just been remediated with new top soil and sod because of another Superfund site in the area. Will this clean up process cause contamination from the Jennison-Wright site to get into their yards and cause additional problems?

No. Erosion and dust control measures are required to prevent such an occurrence.

Risk Issues

Are there threats to children other than cancer coming from this site?

None of the chemicals found at this site are uniquely toxic to children. However, the chemicals present can have effects other than cancer. For example, skin irritation is possible from dermal contact with the creosote-related chemicals.

Could past windblown dust and rain erosion have posed a health risk to residents?

The contaminants found at this site have a tendency to bond tightly to the soil; therefore, they move with the soil. Therefore, windblown dust from the site could contain these contaminants.

Does contamination from the site wash out to the alley or people's yards when it rains really hard?

Hard rains can cause the soils to be washed across the alley way. The contaminants found at this site have a tendency to bond tightly to the soil; therefore, soils washed across the alleyway could contain these chemicals. However, the vegetation on the site has cut down on the amount of washout.

Why is there no contamination on 22nd Street?

Contamination, if any was present, on this road probably has been carted away a little bit at a time - via the heavy traffic.

Can animals that go on and off of the property carry contamination into residential yards?

The transfer of contaminated soil by animals traveling off and on the site is minimal and not of substantive concern as a risk to residents.

Sampling Issues

Could there be additional sampling conducted along the alleyway and the residential properties immediately adjacent to the Jennison-Wright site? More assurances are needed that contamination does not stop at fence line.

As part of the remedial design, the Illinois EPA will conduct additional soil sampling to ensure that the contamination plume is delineated and that we can be sure the contamination is not located in the alleyway or residential yards.

Would the citizens be made aware of sampling conducted in the alleys between Illinois Avenue, between Missouri Avenue, and the tie yard property?

Yes. Prior to sampling an event, local officials and affected homeowners would be made aware of our intentions.

When was the last sampling in the residential areas, specifically on or near Missouri Street?

From July through September 1997, and in December 1997, surface and subsurface sampling, sediment sampling, and a hydrogeologic investigation was conducted. Groundwater sampling was conducted using a Geoprobe; new monitoring wells were installed; and aquifer testing occurred.

This sampling was conducted in the locations indicated in the EE/CA which can be found in the Information Repository, Granite City Public Library.

If the sample results tested "positive", how would the residents be informed about the results?

It is the responsibility of the Illinois EPA's remedial project manager and community relations coordinator to keep the residents, local officials, and other community members informed of on-going site activities, sampling events, milestones, etc. We often meet persons face-to-face, make telephone calls, write letters, and publish fact sheets and newsletters to ensure citizens are made aware of what is going on.

Can there be additional sampling conducted at the point where the ties crossed 22nd Street?

No. Any contamination which was there probably no longer exists because of being carried away by vehicles. In addition, this area is now covered with asphalt.

General Issues

What is meant by RCRA waste?

The Resource Conservation and Recovery Act (RCRA) was enacted in 1976 to address the huge volumes of municipal and industrial waste generated nationwide. After several amendments, the Act as it stands today governs the management of solid and hazardous waste and underground storage tanks.

RCRA waste is any waste that falls under the jurisdiction of the above-mentioned definition.

Explain the groundwater flow and contamination.

The groundwater at this site basically goes from north to south. In the shallower aquifer, it runs north to south until it gets to the south portion of the site then it takes a more westerly flow and heads in the direct of the residential houses.

Contaminants in the groundwater include pentachlorophenol, polyaromatic hydrocarbons, benzene, arsenic, 2,4-dimethylphenol, 2-methylphenol, and naphthalene.

Comments from Jennison-Wright Public Hearing

Both aldermen (Ward 4) attending the public hearing expressed their specific desires to make sure the site is properly cleaned, but they were also very pleased and grateful for the past and upcoming remedial efforts. One alderman offered access to the same city roads to ensure the route the trucks hauling the soil would take. A 84-year old resident who also worked for Jennison-Wright for 42 years had much information regarding past history and operations at the facility. He also expressed his lack of concern for health risks for past employees and nearby residents associated with this site, nevertheless he felt that the site needed to be cleaned up and was glad that it would be done sometime soon.

The most common concerns were about off-site contamination and exposure to residents. The residents were concerned mainly about four subjects:

- The major concern voiced was regarding possible contamination in the alleyway and residential yards. It was believed that the contamination plume could be outside of the fence line.
- Residents wanted to know why there was no contamination on 22nd Street because it was known that ties drip-dried as they crossed the road;
- A concern was that residents believed that they may be further being exposed to contamination through overland flow and dust from the site. They wanted to know what Illinois EPA was doing to reduce this exposure;
- A concern was over how the Illinois EPA could control the mobilization of contaminants in the soil using the steam technique. There was a fear that the mobilized contaminants could re-contaminate their soils or yards now that they have been excavated and re-sodded due to a cleanup of another nearby Superfund site.

The residents had two requests:

- Additional residential and alleyway sampling to determine if there is any contamination in those areas.
- Precautions taken and oversite conducted by the Illinois EPA or their contractors when soil excavation occurred.

The community relations coordinator (Michelle Tebrugge) for the Jennison-Wright site promised to obtain the 1989 residential sampling results for a home on Missouri Avenue. The current home owner will be sent those results in the near future. The Illinois EPA representatives also indicated that residents and aldermen (and other local officials) will be kept informed about on-going site activities -- including when the Illinois EPA has the design and construction monies from the USEPA and when construction begins - via a some type of written update, i.e. newsletter or press release.

For Further Information

Questions about the hearing process and about access to exhibits should be directed to John Williams, Illinois EPA Hearing Officer, Division of Legal Counsel, Illinois EPA, 1021 North Grand Avenue East, P.O. Box 19276, Springfield, Illinois 62794-9276, or phone at 217/782-5544.

Questions about the Proposed Plan and the Engineering Evaluation/Cost Analysis removal actions should be directed to Fred Nika, Project Manager, Bureau of Land, Illinois EPA, 1021 North Grand Avenue East, P.O. Box 19276, Springfield, Illinois 62794-9276, or phone at 217/782-3983.

Questions about the Illinois EPA's enforcement activities should be directed to Kyle Davis, Assistant Counsel, Division of Legal Counsel, Bureau of Land, Illinois EPA, 1021 North Grand Avenue East, P.O. Box 19276, Springfield, Illinois 62794-9276, or phone at 217/782-5544.

Questions about the Responsiveness Summary should be directed to Michelle Tebrugge, Community Relations Coordinator, Illinois EPA, 1021 North Grand Avenue East P.O. Box 19276, Springfield, Illinois 62794-9276, or phone at 217/524-4825.

All documents used by Illinois EPA in formulating the Proposed Plan and all of the alternatives for this site are contained in the site Administrative Record (which also contains the EE/CA) at the Granite City Public Library, 21st and Delmar Streets, Granite City, Illinois.

Copies of the transcript of the August 19, 1999, public hearing can be purchased from Jo Elaine Foster & Associates, 618/877-7016. Copies of this responsiveness summary will be mailed in October 1999 to those who registered at the public hearing and to anyone who requested a copy.

Additional copies of this responsiveness summary are available from Michelle Tebrugge, 217/524-4825.

Thanks to the Citizens Who Became Involved

On behalf of Director Thomas Skinner and the Agency staff, we would like to thank all who took the time to get involved by participating at the public hearing, and at other community meetings, and for their questions and comments.

Signed:_____ Signed: _____
Illinois EPA Project Manager Illinois EPA Hearing Officer

Signed:_____
Illinois EPA Community Relations Coordinator

Dated:_____, 1999

Illinois Environmental Protection Agency
1021 North Grand Avenue East
Post Office Box 19276
Springfield, Illinois 62794-9276

GLOSSARY

Specialized terms and acronyms that are used in the proposed plan, this responsiveness summary, and elsewhere and in this proposed plan are detailed below.

Administrative Record (*AR*) - a file that is maintained, and contains all information used by the lead agency to make its decision on the selection of a response action under CERCLA. This file is to be available for public review and a copy established at or near the site, usually at one of the Information Repositories.

ARARs (Applicable or Relevant and Appropriate Requirements) - *Applicable* requirements are those cleanup standards, standards of control, and other substantive environmental protection requirements, criteria, or limitations promulgated under Federal or State law that specifically address a hazardous substance, pollutant, contaminant, remedial action, location, or other circumstance at a CERCLA site. *Relevant and Appropriate* requirements are those same listed standards that while not "applicable" at the CERCLA site, address problems or situations sufficiently similar to those encountered at the site that their use is well suited to the particular site.

Arsenic -a naturally-occurring but poisonous metallic element extensively used in insecticides and weed killers because of its highly toxic character; also used in the manufacture of glass and in wood preservatives (sodium arsenate).

Asbestos - a building and insulating material widely used for years because of its strength and heat-resisting qualities; it has been found to cause a severe lung ailment, certain types of lung cancer and other respiratory problems.

Benzene - a clear, colorless liquid used as a component of gasoline and diesel fuel. It is also used in recent years in the production of chemical compounds and drugs and in the rubber industry. Long-term exposure of benzene may cause damage to the blood-forming system.

CERCLA (*Comprehensive Environmental Response, Compensation and Liability Act or Superfund*) - a Federal law passed in 1980 and modified in 1986 to create a special tax that goes into a Trust Fund, commonly known as *Superfund*, to investigate and take remedial action at abandoned or uncontrolled hazardous waste sites.

Clean-Up Objectives *(CUOs)* - remediation objectives for contaminated soil and groundwater which protect human health and take into account site conditions and land use. These CUOs are risk-based and site specific.

Community Relations Plan (CRP) - a plan that is prepared at the start of most Superfund response activities to direct activities that will allow the community affected by the site to be kept informed of USEPA, Illinois EPA, and PRP activities.

Creosote - a brown to black oily liquid obtained from coal tar and used as a wood preservative in railroad ties to extend their useful life. Adverse effects to the skin, lungs, and nervous system may be caused by long-term exposure of creosote.

Dibenzofurans - crystalline solid derived from coal tar sometimes used as an insecticide or industrial solvent.

Dioxins - a generic term for a group of 75 related compounds known as polychlorinated dibenzo-p-dioxins. The most toxic compound of this group is 2,3,7,8-tetrachlorodibenzo-p-dioxin (2,3,7,8-TCDD). Although scientists disagree on the long-term health effects of exposure to dioxins, they do agree exposure can cause a persistent skin rash called chloroacne.

Engineering Evaluation/Cost Analysis (*EE/CA*) - performed to evaluate removal actions in terms of their effectiveness, implementability, and cost.

Groundwater - underground water that fills pores in soils or openings in rocks to the point of saturation.

Jennite - an asphalt sealer product composed of coal tar, pitch, clay and water.

Maximum Contaminant Level *(MCL)* - a concentration established by the USEPA for specific chemicals in drinking water supplies that may cause adverse health effects; these MCLs are a set of enforceable standards for drinking water quality.

Naphthalene - a white, crystalline powder and is produced from either coal tar or petroleum. It is a major component in diesel fuels, fuel oil, and creosote. Naphthalene can cause irritation to the respiratory tract,

gastrointestinal system, or skin.
NAPL (Non-Aqueous Phase Liquid) - this is a generic term for a usually petroleum based substance that is found in contaminated groundwater. It's concentration is great enough that it cannot be completely dissolved in water and shows up in concentrated pools at locations within the groundwater.

National Priorities List (*NPL*) - the United States Environmental Protection Agency's list of the most serious, uncontrolled or abandoned hazardous waste sites identified for possible long-term remedial action.

Operable Units (OU) - an action taken as one part of an overall site cleanup.

Parts per billion (*ppb*) - an expression describing a small concentration, equal to an amount of one substance in billion parts of another material; for example, one drop of alcohol in 16 gallons of water.

Pentachlorophenol (*PCP*) - organic compound consisting of light tan to white, needle-like crystals, primarily used in wood preservation and pesticide. Short-term exposure causes skin, eye, or upper respiratory tract irritation; long-term exposure effects the major organ systems - liver, kidney, nervous, and immune. PCP is tentatively classified as a probable human carcinogen; the classification is based on inadequate human data and sufficient evidence of cancer in animals studies.

Polynuclear aromatic hydrocarbons *(PAHs)* - a group of compounds that are often by-products of combustion. PAHs are also associated with coal tar derivatives.

Proposed Plan - a public participation requirement of CERCLA in which Illinois EPA summaries for the public the preferred cleanup strategy, rationale for the preference, alternatives presented in the detailed analysis of their remedial investigation. This document must actively solicit public review and comment on all alternatives under consideration.

PRP (*Potentially Responsible Party*) - any individual(s) or company(s) potentially responsible for, or contributing to, the contamination problems at a hazardous waste site. PRPs can include present and former site owners and operators, as well as anyone who generated or transported the hazardous wastes found at the site. Whenever possible, through administrative and legal actions, Illinois EPA/USEPA requires PRPs to clean up sites they have contaminated.

Purge water - water used to flush a well when taking test samples.

Record of Decision *(ROD)* - a public document that explains which cleanup alternatives will be used. The ROD is based on information and technical analysis generated during the remedial investigation and consideration of public comments and community concerns.

Recycle - process minimizing waste generation by recovering usable products that might be otherwise become waste.

Remedial Investigation/Feasibility Study *(RI/FS)* - Investigative and analytical studies usually performed at the same time in an interactive, iterative process, and together referred to as the RI/FS. They are intended to: gather the data necessary to determine the type and extent of contamination at a Superfund site; establish criteria for cleaning up the site; identify and screen cleanup alternatives for remedial action; and analyze in detail the technology and costs of the alternatives.

Removal action - short-term immediate actions taken to address releases of hazardous substances that require expedited response.

Resource Conservation and Recovery Act *(RCRA)* - a Federal law enacted in 1976 that established a regulatory system to track hazardous substances from their generation to disposal. The law requires safe and secure procedures to be used in treating, transporting, storing, and disposing of hazardous substances. RCRA is designed to prevent the creation of new, uncontrolled hazardous waste sites.

Responsiveness Summary - a summary of oral and written public comments received by Illinois EPA during the

comment period on key documents and the Illinois EPA's responses to those comments. The Responsiveness Summary is a key part of the ROD, highlighting community concerns for decision-makers.

Sludge - a generic term that describes a solid, semi-solid, or liquid waste by-product of an industrial or recycling process.

Solvent - a liquid substance capable of dissolving or dispersing other substance (liquids or solids).

Transite - asbestos siding used in construction of some buildings.

Volatile - readily vaporizable at relatively low temperature.

Zinc naphthanate - chemical used in wood preservation.

ADMINISTRATIVE RECORD INDEX
JENNISON-WRIGHT CORPORATION SITE REMOVAL ACTION
ILLINOIS ENVIRONMENTAL PROTECTION AGENCY
JULY 1, 1999
UPDATE #1

The Comprehensive Environmental Response, Compensation, and Liability Act of 1980 (CERCLA), as amended by the Superfund Amendments and Reauthorization Act of 1986 (SARA), requires the establishment of an Administrative Record upon which the Agency bases its decision when selecting the alternatives for the Remedial Action process.

The Illinois Environmental Protection Agency (IEPA) has compiled the following official Administrative Record Index for the Jennison-Wright Corporation site located in Madison County, Illinois. This index as well as the Administrative Record itself will be updated when necessary by the IEPA. (Definitions of abbreviations are provided on the last page.)

Please contact Michelle Nickey-Tebrugge (P.O. Box 19276, 1021 North Grand Avenue, East, Springfield, Illinois 62794-9276, 217/524-4825) for more information on who and where to direct questions concerning this index.

No.	Title	Issue Date	Author	Number of Pages
1.	Compliance Investigation Report	1/18/85	E & E	122
2.	Preliminary Assessment	1/14/86	Kenneth L. Page (IEPA)	8
3.	Consent Decree	1/15/86	IAGO	16
4.	Sample Results	2/10/88	IEPA	27
5.	Alternative Approach Dioxin/Furan Assessment	3/14/88	Woodward-Clyde	62
6.	Sample Results (3 volumes)	3/22/88	ARDL	542
7.	Sample Results (Groundwater) (2 volumes)	3/25/88	Woodward-Clyde	393
8.	Corr. re: Dioxin	4/15/88	Woodward-Clyde	1
9.	Site Assessment Report	8/88	Woodward-Clyde	575
10.	Memo to Stephen Davis (IEPA)	9/26/88	Tom Long (IDPH)	4
11.	Memo to Stephen Davis (IEPA)	9/26/88	Tom Long (IDPH)	3
12.	Corr. to Pat Petrella (Jennison-Wright)	11/03/88	Thomas Crause	2

No.	Title	Issue Date	Author	Number of Pages
13.	Meeting Minutes	11/17/88	Stephen Davis (IEPA)	5
14.	Response to IEPA Comments	11/18/88	Pat P. Petrella (Jennison-Wright)	31
15.	Sample Results	11/30/88	IEPA	69
16.	Sample Results (Inorganic)	11/30/88	IEPA	47
17.	Memo to Div. File	1/20/89	Stephen Davis (IEPA)	2
18.	Sample Results	1/30/89	Triangle Labs	1355
19.	CERCLA Screening Inspection Report (2 Volumes)	3/17/89	IEPA	518
20.	Corr. to Stephen Davis (IEPA)	6/07/89	Tom Long (IDPH)	4
21.	Corr. to Stephen Davis (IEPA)	6/23/89	Michael A. Cyphert (Thompson, Hine, & Flory)	2
22.	Corr. to Gregory Dunn (IEPA)	6/23/89	Curtis Ross (USEPA-Region V)	4
23.	Corr. to Mayor Von Dee Cruse (Granite City)	7/20/89	Virginia Wood (IEPA)	2
24.	Corr. to Ald. Dan Partney (Granite City)	7/20/89	Virginia Wood (IEPA)	2
25.	Corr. to Ald. Dan Brown (Granite City)	7/20/89	Virginia Wood (IEPA)	2
26.	Fact Sheet IEPA	8/89	IEPA	5
27.	News Release IEPA	8/24/89	IEPA	2
28.	Memo to LPC Div. File	9/89	Virginia Wood (IEPA)	2
29.	Corr. to Ald. Daniel Partney (Granite City)	11/09/89	Virginia Wood (IEPA)	2
30.	Corr. to Mayor Von Dee Cruse (Granite City)	11/09/89	Virginia Wood (IEPA)	2
31.	Corr. to Ald. Dan Brown (Granite City)	11/09/89	Virginia Wood (IEPA)	2

No.	Title	Issue Date	Author	Number of Pages
32.	Corr. to Stephen Davis (IEPA)	12/14/89	Pat Petrella (Jennison-Wright)	1
33.	Corr. to Ald. Daniel Partney (Granite City)	7/27/90	Virginia Wood (IEPA)	2
34.	Seal Order	11/08/90	Bernard P. Killian (IEPA)	5
35.	News Release	11/19/90	Virginia Wood	1
36.	Corr. to Beth Halpern (Congressman Jerry Costello)	1991	Stephen Davis (IEPA)	1
37.	Memo to Div. File	5/24/91	Virginia Wood (IEPA)	1
38.	Jennison-Wright Superfund Site Trust Agreement	6/24/91	IEPA	7
39.	Corr. to Stephen Davis (IEPA)	7/07/91	Ald. Dan Partney	1
40.	Corr. to Stephen Davis (IEPA)	7/11/91	Sen. Sam M. Vadalabene	1
41.	Expanded Site Inspection Site Workplan	7/18/91	Tom Crause (IEPA)	14
42.	Corr. to Honorable Sam Vadalabene	7/26/91	Stephen Davis (IEPA)	1
43.	Corr. to Mr. Dan Partney (Ald.) (Granite City)	7/26/91	Stephen Davis (IEPA)	2
44.	CERCLA Expanded Site Inspection Report	7/30/91	IEPA	216
45.	Corr. to Resident	8/14/91	Virginia Wood (IEPA)	1
46.	Sample Results	8/16/91	Dan Gillespie (ARDL)	139
47.	Status of Jennison-Wright Treatment Tests	8/28/91	CDM Federal Programs Corporation	3
48.	Memo to Sherry Otto (IEPA)	10/30/91	Paul Lee (IEPA)	13

No.	Title	Issue Date	Author	Number of Pages
49.	Asbestos Removal Above Ground Storage Tank Cleaning	10/31/91	Riedel	218
50.	News Release	3/25/92	IEPA	2
51.	Corr. to Resident	3/25/92	Lesley D. Morrow (IEPA)	2
52.	Corr. to Stephen Davis (IEPA)	5/14/92	Daniel J. Wilson (Riedel)	36
53.	4 (q) Notice	5/15/92	Mary A. Gade (IEPA)	57
54.	Corr. To Stephen Davis (IEPA)	5/27/92	Daniel J. Wilson (Riedel)	4
55.	Final Report by Riedel	6/22/92	Daniel J. Wilson (Riedel)	124
56.	Professional Services Contract/Letter of Agreement Info.	6/29/92	Bill Child (IEPA)	2
57.	Sample Results (2 volumes)	7/07/92	TMS Analytical	1127
58.	Contract Transmittal	7/17/92	Sheila File (IEPA)	6
59.	Corr. To Daniel J. Wilson (Riedel)	8/03/92	Stephen Davis (IEPA)	1
60.	Corr. To Dan Sewell (E&E)	9/15/92	Stephen Davis (IEPA)	1
61.	Corr. To Daniel J. Wilson (Riedel)	9/20/92	Stephen Davis (IEPA)	1
62.	Corr. To Stephen Davis (IEPA)	11/04/92	Kathleen Getty (E&E)	1
63.	Memo to Div. File	11/24/92	Greg Dunn (IEPA)	4
64.	Corr. To Alan Altur (USEPA)	2/03/93	Gregory Dunn (IEPA)	2
65.	Corr. To Brad Benning (USEPA)	2/03/93	Gregory Dunn (IEPA)	2
66.	SACM Status Report to Dough Ballotti (USEPA)	2/03/93	Rebecca Frey (USEPA)	3
67.	Corr. To Rebecca Frey (USEPA)	2/03/93	Gregory Dunn (IEPA)	2
68.	Confidential Investigative Report 1	2/15/93	Orion	301

No.	Title	Issue Date	Author	Number of Pages
69.	Corr. to Don Insul (Jennison-Wright Corp.)	3/05/93	Stephen Davis (IEPA)	1
70.	Confidential Investigative Report 2	3/18/93	Orion	103
71.	Paul Seebold Interview	5/03/93	Orion	28
72.	Confidential Investigative Report 3	5/03/93	Orion	366
73.	Corr. To Stephen Davis	5/03/93	Carl Shepherd (Orion)	3
74.	Removal Scope of Work	5/03/93	T.E. Fitzgerald (IEPA)	3
75.	Proposed EE/CA Workplan	6/01/93	E&E	15
76.	Confidential Investigative Report 4	6/03/93	Orion	57
77.	Corr. to L.E. Spencer (All Track Equipment)	6/03/93	Leslie Morrow (IEPA)	3
78.	Tar Pit Characterization	6/07/93	T.E. Fitzgerald (IEPA)	2
79.	Memo Re: Tarpit Investigation	6/09/93	Tracey Fitzgerald (IEPA)	2
80.	Strategy Approval	6/21/93	Jodi Traub (USEPA)	3
81.	Draft Time Line	7/01/93	Rebecca Frey (USEPA)	2
82.	Corr. to Rebecca Frey (USEPA)	7/06/93	Stephen Davis (IEPA)	4
83.	Confidential Investigative Report 5	7/09/93	Orion	98
84.	Corr. to Stephen Davis (IEPA)	7/14/93	Carol Shepard (Orion)	3
85.	EE/CA Comments	8/12/93	Rebecca Frey (USEPA)	3
86.	Last Will and Testament of Carleton G. Carver (Jennison-Wright Corp.)	8/23/93	Orion	92
87.	Corr. to Ald. Daniel Partney (Granite City)	9/14/93	Michelle Tebrugge (IEPA)	2
88.	4 (q) Notice	9/17/93	IEPA	45
89.	Memo re: Disposal Options to Clarence Smith (IEPA)	9/23/93	Tracey Fitzgerald (IEPA)	1

No.	Title	Issue Date	Author	Number of Pages
90.	Sample Results to Fred Nika (IEPA)	10/7/93	Janel Woodin (ESE)	16
91.	Memo re: Waste Classification to Tracey Fitzgerald (IEPA)	10/26/93	Clarence Smith (IEPA)	2
92.	Sample Results (Tar) to Sue Doubet	10/26/93	Janel Woodin (ESE)	26
93.	Corr. re: 4(q) Status to Leo Konzen (Granite City)	11/12/93	Stephen Davis (IEPA)	2
94.	Memo re: Removal Options to Dan Sewell (E&E)	11/16/93	Fred Nika (IEPA)	2
95.	Decision Summary	12/06/93	Jodi Traub (USEPA)	3
96.	EE/CA Final Draft	1/18/94	E&E	117
97.	Community Relations Plan	2/94	IEPA	19

Abbreviations

IAGO - Illinois Attorney General's Office

Orion - Orion Management International

Riedel - Riedel Environmental Services, Inc.

E & E - Ecology and Environment, Inc.

IEPA - Illinois Environmental Protection Agency

USEPA - United States Environmental Protection Agency

ESE - Environmental Science and Engineering

ARDL - Applied Research and Development Laboratory

Woodward-Clyde - Woodward-Clyde Consultants

ADMINISTRATIVE RECORD INDEX
JENNISON-WRIGHT CORPORATION SITE REMOVAL ACTION
ILLINOIS ENVIRONMENTAL PROTECTION AGENCY
JULY 29, 1999
UPDATE #2

The Comprehensive Environmental Response, Compensation, and Liability Act of 1980 (CERCLA), as amended by the Superfund Amendments and Reauthorization Act of 1986 (SARA), requires the establishment of an Administrative Record upon which the Agency bases its decision when selecting the alternatives for the Remedial Action process.

The Illinois Environmental Protection Agency (IEPA) has compiled the following official Administrative Record Index Update for the Jennison-Wright Corporation site located in Madison County, Illinois. This index as well as the Administrative Record itself will be updated when necessary by the IEPA. (Definitions of abbreviations are provided on the last page.)

Please contact Michelle Nickey-Tebrugge (P.O. Box 19276, 1021 North Grand Avenue, East, Springfield, Illinois 62794-9276, 217/524-4825) for more information on who and where to direct questions concerning this index.

No.	Title	Issue Date	Author	Number of Pages
	EE/CA Final	July, 1999	E&E	
	Proposed Plan Final	7-14-99	Fred Nika (IEPA)	
	Fact Sheet	7-20-99	Michelle Tebrugge (IEPA)	
	Public Notice of Hearing	7-18-99	Michelle Tebrugge (IEPA)	
	Revised Community Relations Plan	7-28-99	Michelle Tebrugge (IEPA)	

NTIS does not permit return of items for credit or refund. A replacement will be provided if an error is made in filling your order, if the item was received in damaged condition, or if the item is defective.

Reproduced by NTIS

National Technical Information Service
Springfield, VA 22161

This report was printed specifically for your order from nearly 3 million titles available in our collection.

For economy and efficiency, NTIS does not maintain stock of its vast collection of technical reports. Rather, most documents are printed for each order. Documents that are not in electronic format are reproduced from master archival copies and are the best possible reproductions available. If you have any questions concerning this document or any order you have placed with NTIS, please call our Customer Service Department at (703) 605-6050.

About NTIS

NTIS collects scientific, technical, engineering, and business related information — then organizes, maintains, and disseminates that information in a variety of formats — from microfiche to online services. The NTIS collection of nearly 3 million titles includes reports describing research conducted or sponsored by federal agencies and their contractors; statistical and business information; U.S. military publications; multimedia/training products; computer software and electronic databases developed by federal agencies; training tools; and technical reports prepared by research organizations worldwide. Approximately 100,000 *new* titles are added and indexed into the NTIS collection annually.

For more information about NTIS products and services, call NTIS at 1-800-553-NTIS (6847) or (703) 605-6000 and request the free *NTIS Products Catalog,* PR-827LPG, or visit the NTIS Web site **http://www.ntis.gov.**

NTIS
Your indispensable resource for government-sponsored information—U.S. and worldwide