United States
Environmental Protection
Agency

Office of Water
(WH-550)

EPA 570/9-88-004
September 1989

EPA

# Sanitary Survey Training

## Instructor's Guide For Sanitarians Of Micronesia

*Printed on Recycled Paper*

# CREDITS

This manual was developed and prepared by the South Carolina Environmental Training Center for use by the Sanitarians of Micronesia under EPA Training Grant T-901536-01. Many sections of this manual were taken from USEPA's Sanitary Survey Training Manual which was prepared under a previous contract by Dynamac Corporation, Rockville, Maryland. The material has been adapted for use in Micronesia.

Recognition is due to the following individuals who were involved in the development and implementation of this training manual:

**EPA Project Administrator**

John R. Trax, Chief, Drinking Water Branch; Office of Drinking Water; United States Environmental Protection Agency.

**Project Director**

Dr. William Engel, Director, South Carolina Environmental Training Center; Sumter Area Technical College; 506 North Guignard Drive; Sumter, South Carolina 29150.

**EPA Project Officer**

Kenneth M. Hay, Education/Training Specialist; Office of Drinking Water; United States Environmental Protection Agency.

**Project Coordinator**

Andrew A. Holtan, President; A. Holtan and Associates, Whiteford, Maryland.

**Instructor and Technical Advisor**

William Rowell, Manager of Engineering, Surveillance and Technical Assistance, South Carolina Department of Health and Environmental Control.

**Instructional Development**

Susan McMaster, Director of Staff and Instructional Development, Sumter Area Technical College, Sumter, South Carolina 29150.

**Media Development**

Jann S. Jayroe, Media Specialist; Sumter Area Technical College; Sumter, South Carolina 29150.

## Technical Advisors

The following individuals assisted in selecting the need-to-know technical information provided in the original manual. This was accomplished with a great deal of discussion, compromise, and ultimate agreement on the part of each of the individuals concerned with the development of this document.

M. K. Batavia, Director, Water Supply, State of South Carolina

Bill Carpenter, Assistant Training Director, National Rural Water Association

Peter Karalekas, Water Supply Branch, USEPA Region I, Boston, Massachusetts

Ken Kerri, Professor of Civil Engineering, Californa State University of Sacramento

Don Kuntz, Chief, Drinking Water Division, State of West Virginia

Don Moore, Office of Environmental Health, Indian Health Service - Phoenix

William Price, Chief, Technical Services and Training, Public Drinking Water Program, State of Missouri

T. Jay Ray, Water Supply Branch, USEPA Region VI, Dallas, Texas

W. Clough Toppan, Manager, Drinking Water Program, State of Maine

Bob Williams, Water Supply Branch, USEPA Region II, New York, New York

# PREFACE

This Instructor's Guide for sanitary survey training for Sanitarians of Micronesia has been developed as an aid to Micronesian agencies who provide instruction to inspectors of water systems. It is based on the minimum information that an inspector with limited experience needs to know to successfully assess a public water system.

The Instructor's Guide and the Reference Manual are intended for use in conducting technical assistance seminars for personnel responsible for safe drinking water programs. The instruction team has worked closely with Ken Hay, Project Officer, who has provided extensive technical assistance in ensuring that the course focuses on the "need-to-know" information. Field exercises have been included to give students "hands-on" experience in conducting a sanitary survey in the field and to provide students with the opportunity to apply classroom "need-to-know" information on-site.

The overall objective of training courses conducted using these materials is to provide the minimum training that, when complemented by on-the-job training, will enable personnel to perform effective evaluations of small public water supply systems. Students attending training where this manual is used by an instructor should have a basic knowledge of water supply systems and some limited on-the-job experience with sanitary surveys. It must be stressed that this manual provides only "need-to-know" information; that is, only the basic knowledge that an inspector needs to know in order to adequately evaluate a water system. The manual does not provide technical detail on every facet of a water system, nor is it intended to provide the student with all of the background information necessary to provide technical assistance.

## TABLE OF CONTENTS


| UNIT TITLE | PAGE |
|---|---|
| CREDITS | i |
| TECHNICAL ADVISORS | ii |
| PREFACE | iii |
| TABLE OF CONTENTS | iv |
| PROPOSED AGENDA | vi |
| INSTRUCTOR'S NOTES | viii |
| PREPARATION CHECKLIST - FORM 1 | xv |
| REGISTRATION FORM - FORM 2 | xvi |
| PARTICIPANT DATA SHEET - FORM 3 | xvii |
| EVALUATION QUESTIONNAIRE - FORM 4 | xviii |
| PROGRAM EVALUATION - FORM 5 | xxi |
| SUGGESTED REFERENCES | xxii |
| UNIT 1. ORIENTATION | 1-1 |
| UNIT 2. WATER SOURCES | 2-1 |
| 2a. General | 2-2 |
| 2b. Wells | 2-7 |
| 2c. Springs | 2-11 |
| 2d. Surface Sources | 2-14 |
| 2e. Rain Catchments | 2-18 |
| UNIT 3. PUMPS | 3-1 |
| UNIT 4. WATER TREATMENT | 4-1 |
| UNIT 5. STORAGE | 5-1 |
| 5a. Gravity Storage | 5-2 |
| 5b. Hydropneumatic Tanks | 5-5 |
| UNIT 6. WATER DISTRIBUTION | 6-1 |
| 6a. Distribution Systems | 6-2 |
| 6b. Cross-Connections | 6-5 |
| UNIT 7. MONITORING/RECORDKEEPING | 7-1 |

TABLE OF CONTENTS (CONTINUED)


| UNIT TITLE | | PAGE |
|---|---|---|
| UNIT 8. | MANAGEMENT/SAFETY | 8-1 |
| UNIT 9. | SURVEYS | 9-1 |
| UNIT 10. | COMMUNICATIONS/PUBLIC RELATIONS | 10-1 |
| UNIT 11. | TECHNICAL ASSISTANCE | 11-1 |
| UNIT 12. | CONCLUSION | 12-1 |

## PROPOSED AGENDA FOR A TYPICAL TRAINING SESSION

### DAY 1

| Unit | Title | Contact Time | Schedule |
|---|---|---|---|
| 1 | ORIENTATION | 60 minutes | 9:00 am - 10:00 am |
| 2 | WATER SOURCES | | |
| 2a | General | 30 minutes | 10:00 am - 10:30 am |
| | BREAK | 15 minutes | 10:30 am - 10:45 am |
| 2b | Wells | 90 minutes | 10:45 am - 12:00 noon |
| | LUNCH | 60 minutes | 12:00 noon - 1:00 pm |
| 2c | Springs | 45 minutes | 1:00 pm - 1:45 pm |
| 2d | Surface Sources | 30 minutes | 1:45 pm - 2:15 pm |
| 2e | Rain Catchments | 60 minutes | 2:15 pm - 3:15 pm |
| | BREAK | 15 minutes | 3:15 pm - 3:30 pm |
| 3 | PUMPS | 30 minutes | 2:30 pm - 3:00 pm |

### DAY 2

| | | | |
|---|---|---|---|
| 4 | WATER TREATMENT | 180 minutes | 8:30 am - 11:30 am |
| 5 | STORAGE | | |
| 5a | Gravity Storage | 30 minutes | 11:30 am - 12:00 noon |
| 5b | Hydropneumatic Tanks | 30 minutes | 12:00 noon - 12:30 pm |
| | LUNCH | 45 minutes | 12:30 pm - 1:15 pm |
| 6 | WATER DISTRIBUTION | | |
| 6a | Distribution Systems | 30 minutes | 1:15 pm - 1:45 pm |
| 6b | Cross-Connections | 30 minutes | 1:45 pm - 2:15 pm |
| 7 | MONITORING/RECORDKEEPING | 30 minutes | 2:15 pm - 2:45 pm |
| 8 | MANAGEMENT/SAFETY | 30 minutes | 2:45 pm - 3:15 pm |
| 9 | SURVEYS | 45 minutes | 3:15 pm - 4:00 pm |
| 10 | OPEN DISCUSSION | 30 minutes | 4:00 pm - 4:30 pm |

## PROPOSED AGENDA (CONTINUED)

### DAY 3

| Unit | Title | Contact Time | Schedule |
|---|---|---|---|
| | FIELD SANITARY SURVEY OF WATER TREATMENT SYSTEM | 3 1/2 hours | 8:30 a.m. - 12:00 noon |
| | LUNCH | 60 minutes | 12:00 noon - 1:00 pm |
| | SANITARY SURVEY OF ROOF RAIN CATCHMENTS AND SPRINGS | 120 minutes | 1:00 pm - 3:00 pm |
| | EVALUATION | 90 minutes | 3:00 pm - 4:30 p.m. |
| | CONCLUSION | 30 minutes | 4:30 pm - 5:00 pm |

## INSTRUCTOR'S NOTES

A thorough understanding of this Instructor's Guide is vital to the successful presentation of a sanitary survey training program. This guide, when complemented by on-the-job experience for the student under the guidance of a more experienced inspector, will enable the instructor to successfully provide the minimum training necessary to conduct a sanitary survey. In presenting such a program, the Reference Manual must be utilized in conjunction with this guide.

This guide is designed for use by individuals who are experts in the field of water systems and sanitary surveys but who may not be experienced in training and instructional techniques.

This guide includes the basic text material, audiovisuals, and evaluation exercises as well as detailed instructions for presenting the material and managing sanitary survey training activities. The content of this guide is designed for presentation to students of varying educational backgrounds. Students trained using this guide should be sanitary engineers, sanitarians, or technicians with some experience in performing sanitary surveys.

### Goals

The purpose of the Instructor's Guide and the Reference Manual is to provide the basic outline, text, and materials for use in a training program. The outline and text should be modified to present the specific situations encountered during a sanitary survey within a particular area.

The student's ability to relate course information to the activities of the sanitary survey is very important. The instructor should explain how the information presented can be used during an actual survey. Field exercises provide the student with an opportunity to apply the basic "need-to-know" information to actual situations.

At the completion of the sanitary survey training course, the student should be able to determine that the water system is complete and functioning in an approved manner.

### Presentation

To successfully present a sanitary survey training program utilizing this guide, the instructor must be thoroughly conversant with all aspects of small water systems and the activities of a sanitary survey. Training information is provided in brief outline form. The outlines are designed to serve as guidelines to ensure that all relevant information is covered. The outlines in themselves are not complete sources of information but rather are notes designed to be expanded upon by the instructor. It is imperative to the successful presentation of this training that all points in the outlines be covered.

This outline approach will provide the instructor with maximum flexibility in adapting the training program to the specific needs of a particular area. The points covered in the outline are general and will apply to most sanitary survey requirements.

The instructor can greatly enhance student understanding by relating anecdotes from personal experience demonstrating means of determining whether system activities such as disinfection and cross-connection control are, in fact, adequately performed.

The instructor should encourage participation of students by eliciting responses from them. It is helpful for the instructor to organize students into teams of four or five students each on the first day mixing students from different locations and with various levels of experience in conducting sanitary surveys to ensure good interaction among students. Experienced individuals interested in learning how to deliver sanitary survey training should be designated as team leaders.

Field exercises are included for the purpose of providing "hands-on" training and should simulate a field survey. They should never become merely plant tours where the instructor provides all the information. Following field exercises, group sessions should be scheduled to provide immediate feedback and emphasize "need-to-know" information.

The technical assistance unit provides a means to discuss additional field conditions not present at selected sites.

## Facilities

The training coordinator should arrange for classroom training facilities and water systems for the field exercise. Generally, training is held in a motel where students can have room accommodations. The training facility should be easily accessible to the airport (generally by a motel limo service) and provide lodging and meals so that travel to restaurants and training facilities does not take away from training time.

The motel should provide a training room with a seating capacity for a maximum of thirty people, using wing seating. (See Classroom Diagram, page xiv.) The training room should be evaluated to ensure easy access to restrooms, temperature controls, natural and artificial lighting controls suitable for use of audio-visual equipment, noise control, visibility of audio-visual equipment by students, and availability of power sources for audio-visual equipment.

## Meals

The training coordinator should arrange for the following meals/breaks:

| | Day 1 | Day 2 | Day 3 |
|---|---|---|---|
| Coffee Break(a.m.) | X | X | - |
| Lunch | X | X | - |
| Coffee Break(p.m.) | X | X | X |
| Guided Discussion | - | X | X |

## Field Exercise

The training coordinator should select at least two sites for field exercises. The sites should be typical of situations encountered by sanitary survey inspectors in the region. The training coordinator should select sites by giving consideration to the following criteria: 1) access and cooperation by the owner, 2) proximity to training site and ease of transportation, 3) sites representative of typical systems, 4) level of treatment. (Note: Systems which have problems are preferred so that common operating problems can be observed.)

Generally, a groundwater system and a surface system are scheduled for the on-site field exercises. The coordinator should try to arrange for vans, if possible, because a car pool of more than two or three vehicles creates confusion.

The coordinator should ensure that both instructors and students have appropriate clothing and safety gear.

During the field exercises the coordinator/instructors designate field teams and team leaders to conduct the sanitary survey. Each team should have students with various levels of experience and from different locations, if possible, to ensure interaction. (Team leaders should be the most experienced.) Each team should record their observations on a sanitary survey form, as though they were actually conducting a survey. (Instructors may have to supply some information which would be too difficult or time-consuming to collect on-site.) Students should be instructed to be courteous and not to make negative or derogative comments to site personnel. A debriefing session back at the training site should be scheduled immediately following the field exercises. At that time students are encouraged to share their observations concerning potential safety and sanitary risks.

## Material

Instructor's Guide

- Proposed Agenda
- Preparation Checklists
- Basic Material (Units 1-12)
- Evaluation Forms
- Instructional Aids (from which transparencies can be made)
- Provisions for including specific regulatory information

Reference Manual (separate manual)

- Introduction
- Basic Material (Units 1-12)
- Provisions for student's supplementary materials

## Format

The instructional component of this manual is divided into 12 units of varying lengths. Each unit is organized into the following sections:

- Unit Summary. This section gives the instructor an overview of the unit material.

- Objectives. Each unit is based on specific objectives which state what the student should be able to do at the end of the presentation. The objectives are based on information the student needs in order to successfully perform a sanitary survey. The instructor should make careful note of these objectives and use them to guide the presentation.

- Basic Material. This section provides the basic information in outline form. The instructor should use the basic material section to guide the presentation, being sure to cover all points in the outline. Additional information and personal anecdotes should be presented as time allows. Transparencies are included in this section as aids for presentations and as reinforcement of text material.

- Basic Material Format. This manual presents basic material and instructional strategy in a two-column format. The basic material, in outline form, is located in the right column. (Related material is included in the Reference Manual.)

  Specific instructions for presenting the material are located in the left column. These directions are designed to aid the instructor in varying the material presentations and in encouraging active student participation in the program.

- Instructor's Narrative. The first few units provide an instructor's narrative in order to aid the instructor. However, instructors should rely on their own expertise and experience and should not read material to the student.

- Unit Emphasis. Units dealing with system components and operations emphasize sanitary risks and means of evaluating these risks. The sanitary risk factors listed in the units describe situations or conditions that can increase the risk of contamination. They can also be used to identify specific means of protection.

- Student Preparation. Prior to the presentation of each unit, students should read the basic material in the Reference Manual. This will familiarize students with topics to be covered in the unit so that they can contribute actively to unit sessions. Specific assignments are listed both in the Instructor's Guide and in the Reference Manual. Instructors should assign each section in advance of the session.

## Flexibility

The guide is designed to accommodate specific requirements of the participants and of the local circumstances. The instructor should be aware of the level of education and experience of the group because it will determine the amount and depth of technical information to be presented during a particular training session.

When possible, instructor materials such as site maps, well logs, and engineering plans should represent actual circumstances in the student's particular geographical area.

- Content Modification. Changes in the content of the guide can be made in order to reflect the types of systems and sources that students will encounter in a particular area. The lesson objectives and instructional strategies are sufficiently flexible to accommodate additions and deletions of material. Provisions are made in the Instructor's Guide for these modifications.

  Instructors are encouraged to add additional materials, visual aids, examples and anecdotes to supplement the basic material of this guide. However, care should be taken to assure that additions relate directly to the instructional objectives and do not stray from the category of "need-to-know" information. Any changes should always relate directly to improving the student's ability to conduct a successful sanitary survey.

- Schedule Modification. The Proposed Schedule is set up on a 3-day block of time. If such a schedule is impractical, the plan may be modified since each unit is independent. For example, one or more units can be presented in an evening or on partial days over a 2-to 3-week period.

## Evaluation

At the close of the training, all participants (students and instructors) should be asked to evaluate the overall effectiveness of the presentation. Specifically, the instructional staff, training materials, presentation organization, and facilities should be evaluated. These evaluations can be used to identify deficiencies and make improvements in the overall program.

**Training Equipment**

2 matte screens
1 blackboard/chalk
1 flip chart/markers
* 1 overhead projector
* 1 16 mm projector (with take-up reel)
* 1 carousel slide projector (with tray and remote control)(Ektagraphic III)
1 Wollensak cassette tape player synchronized (with the slide projector)
2 extension cords
1 light pointer
1 telescopic pointer

Name tags (both table top and pin on)
Include name and geographic location. Seat assignments using tabletop name cards may be used to facilitate interaction.

**(*Spare bulbs for all projectors)**

Classroom Diagram - (Wing seating arrangement)

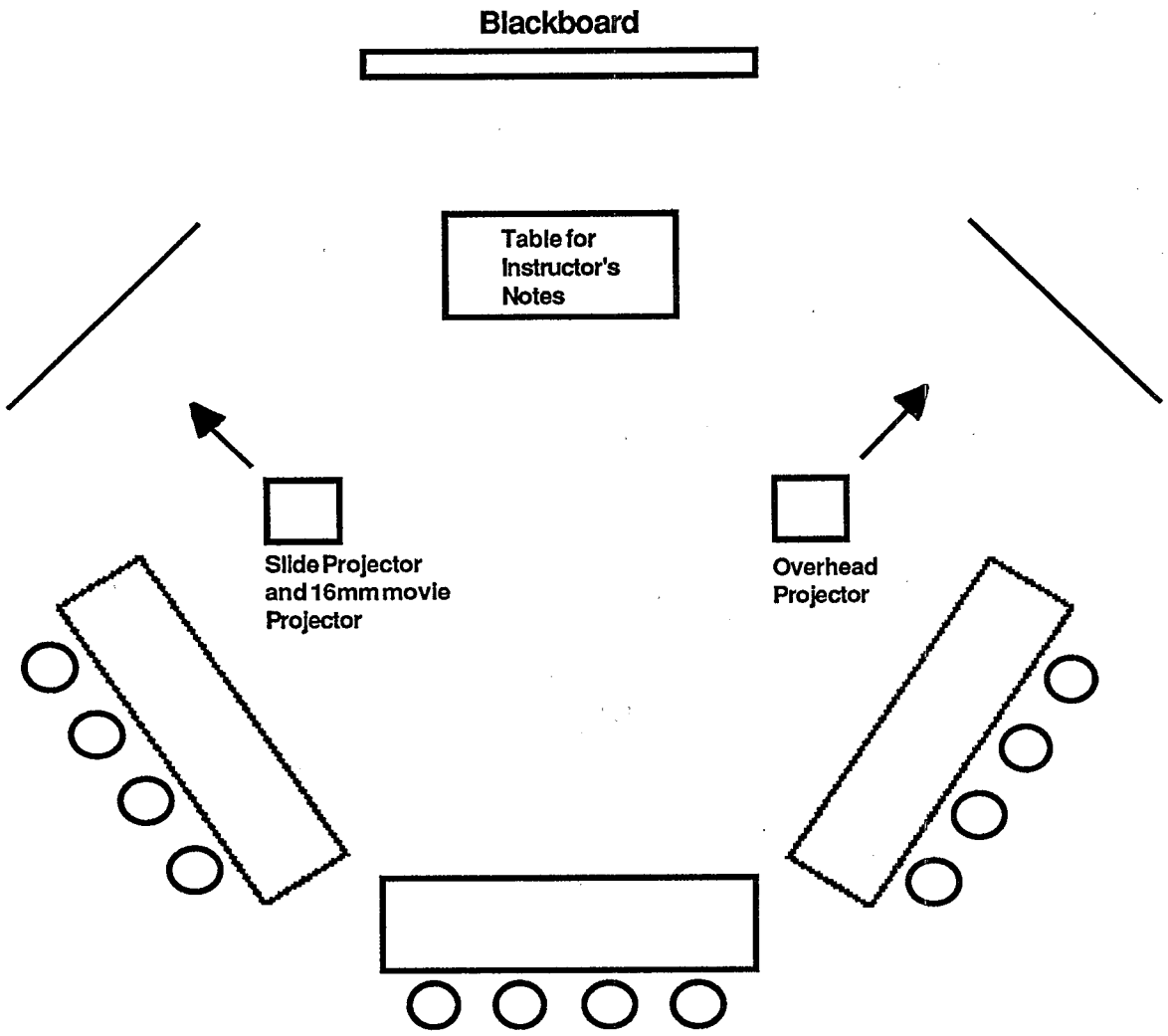

*Form 1*

## PREPARATION CHECKLIST

**Preliminary Activities.** Use this checklist in planning and preparing for the training sessions. Additional steps may be necessary to meet specific requirements.

_____ Review all materials thoroughly, paying particular attention to the recommendations in the Instructor's Guide.

_____ Set the dates for the program and schedule the facilities. Facility considerations include:
- Meeting room of adequate size
- Adequate number of tables and comfortable chairs
- Nearby facility for lunch
- Coffee and refreshments available
- Lodging for off-island participants

_____ Schedule field exercises.

_____ Prepare and mail letters of invitation and Participant Data Sheets (Form 3, page xvii) to prospective participants.

_____ Adjust course to meet specific requirements, if desired. Change Reference Manual, if necessary.

_____ Prepare Roster of Participants. (See Form 2, page xvi.)

_____ Send Acknowledgment Form and Reference Manual to participants 2 weeks in advance.

_____ Make arrangements for equipment:
- Chalkboard/chalk
- Movie screen
- Slide projector, spare lamp
- Overhead projectors, spare lamps
- Instructional materials (see "Logistics" section of each lesson)

_____ Duplicate all materials to be handed out to the students.
- Simulation exercises
- Evaluation forms
- Other materials to be added by the instructor
- Field site evaluation/inspection form

**Presentation Checklist.** Use this checklist to prepare for each presentation.

_____ Review entire lesson thoroughly, including material in Student's Text.

_____ Study lesson objectives.

_____ Study basic material. Clarify questions; insert specific local information.

_____ Duplicate handouts (if any).

_____ Prepare other material as needed to complete lesson.

_____ Make sure necessary equipment is available and functional.

Form 2

## Registration Form

## WATER SUPPLY SYSTEMS-SANITARY SURVEY

Location: _____

_____

_____

Date: _____

| | Student | Address |
|---|---|---|
| 1. | | |
| 2. | | |
| 3. | | |
| 4. | | |
| 5. | | |
| 6. | | |
| 7. | | |
| 8. | | |
| 9. | | |
| 10. | | |
| 11. | | |
| 12. | | |
| 13. | | |
| 14. | | |
| 15. | | |
| 16. | | |
| 17. | | |
| 18. | | |
| 19. | | |
| 20. | | |

Form 3

ENVIRONMENTAL PROTECTION AGENCY/SOUTH CAROLINA WATER QUALITY INSTITUTE

"Water Supply - Sanitary Surveys"
Course

PARTICIPANT DATA SHEET

NAME _____ DATE _____

EMPLOYER _____ COURSE LOCATION & DATE _____

ADDRESS _____

_____

PHONE NUMBER _____

SOCIAL SECURITY NUMBER _____ ____ _____
(This information will be confidential and used for reimbursement procedures only.)

JOB TITLE _____

CURRENT DUTIES _____

_____

_____

EDUCATION:

College of Hard Knocks _____
Associate Degree In _____
Undergraduate Degree(s) In _____
Graduate Degree(s) In _____

_____

Training or Operational Certificates _____

EXPERIENCE:

Years in Environmental Health _____
Years in Water Supply _____
Years in Sanitary Surveys _____
Years in Water Supply Systems Operations _____

Form 4

# WATER SUPPLY SYSTEMS - SANITARY SURVEY
# EVALUATION QUESTIONNAIRE

Date of Completion _____ Location of Presentation _____

Participant's Job Title or Description _____

_____

Years of Experience _____

| | Excellent | Good | Fair | Poor |
|---|---|---|---|---|
| 1. How would you rate this training course in terms of its overall use to you? | _____ | _____ | _____ | _____ |
| 2. How would you rate the classroom facilities in terms of their positive contribution to the learning experience? | _____ | _____ | _____ | _____ |
| 3. How would you rate the various teaching aids in terms of their positive contribution to the learning experience? | _____ | _____ | _____ | _____ |
| a. audio-visual aids | _____ | _____ | _____ | _____ |
| b. handout materials | _____ | _____ | _____ | _____ |
| c. course notes - content | _____ | _____ | _____ | _____ |
| d. course notes - diagrams | _____ | _____ | _____ | _____ |
| e. course notes - format | _____ | _____ | _____ | _____ |
| f. lab equipment | _____ | _____ | _____ | _____ |
| 4. How would you rate your instructors in terms of their teaching ability? (Please write in instructors' names.) | | | | |
| a. _____ | _____ | _____ | _____ | _____ |
| b. _____ | _____ | _____ | _____ | _____ |
| c. _____ | _____ | _____ | _____ | _____ |
| d. _____ | _____ | _____ | _____ | _____ |
| e. _____ | _____ | _____ | _____ | _____ |
| 5. How would you rate the field exercise? | _____ | _____ | _____ | _____ |

EVALUATION QUESTIONNAIRE (CONTINUED)

6. Would you recommend this training course to State or other personnel? Yes _____ No _____

7. Would you recommend this training course to other people at your facility? Yes _____ No _____

8. Was there anything about this course, the instructors and/or classroom facilities that particularly bothered you? Yes _____ No _____

   If yes, please specify: _____

   _____

9. Was there anything about this cosurse, the instructors and/or classroom facilities that particularly pleased you? Yes _____ No _____

   If yes, please specify: _____

   _____

10. Do you feel that you had adequate opportunity to pursue issues, ideas and/or information that are relevant to your job requirements? Yes _____ No _____

    If yes, please specify: _____

    _____

11. Generally speaking, this training course...(Please circle appropriate responses.)

    a. bored me
    b. interested me
    c. was too long
    d. wasted my time
    e. helped me professionally
    f. was poorly designed
    g. was well designed, but poorly presented
    h. was given to the wrong people

12. Did the objectives and content of the course conform to the description of the course given to you prior to your attendance? Yes _____ No _____

    If not, please comment further: _____

    _____

EVALUATION QUESTIONNAIRE (CONTINUED)

13. This training course would be significantly improved by...(Please circle appropriate responses and provide specific comments in Item No. 16.)

    a. having other personnel teach it
    b. modifying course content
    c. modifying amounts of time allocatd to specific topics
    d. holding class meetings in a different physical environment
    e. increasing the use of slides and films
    f. making classes more informal and less lecture-oriented
    g. increasing the number of lectures
    h. increasing the number of workshop or problem-solving sessions
    i. other changes (please specify) _____

14. Were the objectives of this course clearly stated and achieved? Yes _____ No _____

    If not, please comment further: _____

    _____

15. Was the field exercise helpful in applying classroom information? Yes _____ No _____

    If not, please comment further: _____

    _____

16. How would you rate the Sanitary Survey form used during this workshop?

| | | Excellent | Good | Fair | Poor |
|---|---|---|---|---|---|
| a. usable | a. | _____ | _____ | _____ | _____ |
| b. comprehensive | b. | _____ | _____ | _____ | _____ |

17. What would you add, delete or otherwise change in the Sanitary Survey form?

    _____

    _____

    _____

18. Please make whatever additional comments you think are relevant to an evaluation of this training course. You may want to expand upon comments made in various portions of this questionnaire or to say something you have not had the opportunity to say.

19. Should this course become a standard training activity in your state?

Form 5

## Program Evaluation

### Instructor Feedback Report Form
(10 minutes)

**Note to the instructor:** These questions are presented only as a guide to assist you in organizing your impressions of the conduct and outcome of the program. Your report should include important subjective and observational information for you in continually upgrading the training program.

### The Students

1. Were they motivated?

2. Did the instructional units meet their needs?

3. What was not covered that should have been?

4. What was their reaction to the Reference Manual?

### The Techniques

1. Were the techniques and methods appropriate for and helpful in presenting the material? Please explain.

2. What techniques were most effective? Least?

3. What changes would you suggest to the designers of the program?

## SUGGESTED REFERENCES

1. **Water Treatment Plant Operations, Volume I**
   **Water Treatment Plant Operations, Volume II**
   **Water Supply System Operation**
   Available from: Kenneth Kerri
   Department of Civil Engineering
   California State University, Sacramento
   6000 J Street
   Sacramento, CA 95810
   (Phone: 916-454-6142)
   Price: $30.00 per manual

2. **Manual of Water Utility Operations**
   Available from: Texas Water Utilities Association
   6521 Burnet Lane
   Austin, TX 78757
   Price: $17.00

3. **A Manual of Instruction for Water Treatment Plant Operators**
   Available from: Health Education Services, Inc.
   P. O. Box 7126
   Albany, NY 12224
   Price: $3.13

4. **Planning for an Individual Water System**
   Available from: American Association for Vocational
   Instructional Materials
   Engineering Center
   Athens, GA 30602
   Price: $7.65

5. **Water Systems Handbook**
   Available from: Water Systems Council
   221 North LaSalle Street
   Chicago, IL 60601
   Price: $6.00

6. **Environmental Engineering and Sanitation** -- by Joseph A. Salvato
   Available from: John Wiley & Sons, Inc.
   Somerset, NJ 08873
   Price: $55.00

7. **National Interim Primary Drinking Water Regulations**
   Available from: Superintendent of Documents
   U.S. Government Printing Office
   Washington, D.C. 20402
   Stock No. 055-000-00157-0
   Price: $5.50

8. **Manual of Individual Water Supply Systems**
   Available from: Superintendent of Documents
   U.S. Government Printing Office
   Washington, DC 20402
   Stock No. 055-000-00229-1
   Price: $6.00

SUGGESTED REFERENCES (CONTINUED)

9. **"How to Conduct a Sanitary Survey" Procedures Manual**
   Available from: New Mexico Health and Environmental Department
   Environmental Improvement Division
   P. O. Box 968
   Santa Fe, NM 87504-0968
   Price: $4.00

10. **"National Interim Primary Drinking Water Regulations"**
    Available from: Environmental Protection Agency
    Office of Water Supply
    Washington, D.C. 20460
    EPA-570/9-76-003

11. **"National Secondary Drinking Water Regulations"**
    Available from: Environmental Protection Agency
    Office of Water Supply
    Washington, D.C. 20460
    EPA-570/9-76-000

12. **"The Safe Drinking Water Act Handbook for Water system Operators"**
    Available from: AWWA
    6666 W. Quincy Avenue
    Denver, Colorado 80235

13. **"Introduction to Water Sources Transmission" Volume I**
    Available from: AWWA
    6666 W. Quincy Avenue
    Denver, Colorado 80235

14. **"Introduction to Water Treatment" Volume II**
    Available from: AWWA
    6666 W. Quincy Avenue
    Denver, Colorado 80235

15. **"Introduction to Water Distribution" Volume III**
    Available from: AWWA
    6666 W. Quincy Avenue
    Denver, Colorado 80235

16. **"Introduction to Water Quality Analyses" Volume IV**
    Available from: AWWA
    6666 W. Quincy Avenue
    Denver, Colorado 80235

17. **"Basic Science Concepts and Applications" Reference Handbook**
    Available from: AWWA
    6666 W. Quincy Avenue
    Denver, Colorado 80235

SUGGESTED REFERENCES (CONTINUED)

18. **"Manual of Water Utility Operations"**
    Available from: Texas Water Utilities Association
    6521 Burnet La.
    Austin, Texas 78757

19. **"Manual of Instruction for Water Treatment Plant Operations"**
    Available from: Health Education Service
    P. O. Box 7283
    Albany, New York 12224

20. **"Planning for an Individual Water System"**
    Available from: American Association for Vocational Instructional Materials
    Engineering Center
    Athens, Georgia 30602

21. **"Water Treatment Plant Operation" Volume I**
    Available from: Kenneth Kerri
    Department of Civil Engineering
    California State University, Sacramento
    6000 J Street
    Sacramento, California 95819-2694
    phone: 916-454-6142

22. **"Water Treatment Plant Operation" Volume II**
    Available from: Kenneth Kerri
    Department of Civil Engineering
    California State University, Sacramento
    6000 J Street
    Sacramento, California 95819-2694
    phone: 916-454-6142

23. **"Water Supply System Operation" Volume III**
    Available from: Kenneth Kerri
    Department of Civil Engineering
    California State University, Sacramento
    6000 J Street
    Sacramento, California 95819-2694
    phone: 916-454-6142

ADDITIONAL READINGS

1. Water Treatment Plant Design, prepared jointly by the American Water Works Association, Conference of State Sanitary Engineers, and American Society of Civil Engineers
    Available from: Data Processing Department, AWWA
    6666 W. Quincy Avenue
    Denver, CO 80235
    Order NO. 10006
    Price: To members - $14.40; nonmembers - $18.00

SUGGESTED REFERENCES (CONTINUED)

2. **Water Quality and Treatment: A Handbook of Public Water Supplies;** American Water Works Association, Third Edition, McGraw-Hill, 1971
   Available from: Data Processing Department, AWWA
   6666 W. Quincy Avenue
   Denver, CO 80235
   Order No. 10008
   Price: To members - $34.10; nonmembers - $42.60

3. **Manual of Treatment Techniques for Meeting the Interim Primary Drinking Water Regulation;** EPA 600/8-77-005
   Available from: ORD Publications
   USEPA-CERI
   26 West St. Clair Street
   Cincinnati, OH 45268
   Price: Free

AUDIO-VISUAL TRAINING MATERIALS

**Films**

1. "Anybody Can Do It"
   Supplier: Out of Print

2. "Safe Handling of Chlorine"
   Supplier: AWWA
   Technical Library
   6666 W. Quincy Avenue
   Denver, Colorado 80235
   phone: 303-794-7711

**Slide/Tapes**

1. "Safe Handling of Water Treatment Chemicals"
   Supplier: AWWA
   Technical Library
   6666 W. Quincy Avenue
   Denver, Colorado 80235
   phone: 303-794-7711

**Slides of Case Histories**

Individual libraries

## UNIT 1: ORIENTATION - "THE NEED TO KNOW"

**Unit Summary**

Registration and Introduction
Schedule and Format
The Sanitary Survey

**Unit Objectives**

Students will assess their entering competencies and discuss the purpose of the training sessions.

**Logistics**

Approximate Presentation Time: 60 minutes

- Registration (10 minutes)
- Basic Material
- Transparencies 1-1a through 1-8

Student Materials

- Reference Manual, Unit 1

Student Preparation

- Unit 1 should be read prior to the session.

Unit References

| | |
|---|---|
| Register students. Use forms provided in introduction section. Participant Data Sheet (p. xvii) Registration Form (p. xvi) | Registration (10 minutes) |

Basic Material

| INSTRUCTOR GUIDELINES | PRESENTATION OUTLINE |
|---|---|
| Introduce instructors(s); give brief biographical sketch to instill student confidence in instructor credentials. | |
| Review schedule, format, and logistical necessities. | |
| Use Transparency 1-1a. | |
| Introduce students. Ask each to give some brief personal background information. Try to create informal atmosphere. Have each student briefly explain what his/her job is. This information can be used to draw anecdotes from actual student experience. | A. Introduction of students (20 minutes)<br>Personal Information<br>- Home location<br>- Previous experience |
| Explain objective of unit. | B. The Sanitary Survey (25 minutes) |
| Use questions to elicit responses prior to presenting material on specific areas. | |
| Use Transparency 1-1. | 1. What is a sanitary survey?<br>- No longer the classic "sanitary survey" of watershed. |
| Use Transparency 1-2a. | |
| Use Transparency 1-2. | 2. Why should sanitary surveys be conducted?<br>a. Determine adequacy of both quantity and quality of the water provided for public consumption.<br>b. Identify problem areas and provide possible remedies. |
| Use Transparency 1-3. | 3. Who conducts sanitary surveys?<br>- Competent personnel who are experienced in the identification of problems within a water system. |
| Use Transparency 1-4. | 4. What are activities and their rationale of a sanitary survey? |

| INSTRUCTOR GUIDELINES | PRESENTATION OUTLINE |
|---|---|
| | a. Inspect and Evaluate<br>1. Water source<br>2. Intake structure and wells<br>3. Treatment/conditioning facilities<br>4. Distribution system |
| Emphasize that the period of the survey is very short when compared with total time system must function. | b. Review<br>1. Operations and maintenance practices<br>2. Records, files, maps, correspondence<br>3. Management practices and personnel needs<br>4. Competency of technical and ancillary personnel<br>5. Laboratory certification |
| | c. Sample |
| | a. Sample source and distribution for bacteriological, physical, chemical, and radiological properties and (as required) perform and evaluate field analyses. |
| Emphasize that this is the heart of the survey. | d. Recommend<br>1. Complete survey report and present data (both negative and positive comments) to operating personnel.<br>2. Discuss problem areas and provide recommendations for their remedies. Provide an appropriate time schedule for remedies. |
| | e. Notify<br>1. The owner/operator, public, regulatory agency of problems (as required). |
| Emphasize that remainder of presentations will be spent answering these questions. | C. Sanitary Risks<br>1. What conditions cause sanitary risks?<br>2. How can they be recognized? |
| Use Transparency 1-5. | |
| Use Transparency 1-6. | |

| INSTRUCTOR GUIDELINES | PRESENTATION OUTLINE |
|---|---|
| Briefly highlight components that will be discussed during course.<br><br>Use Transparency 1-7 and 1-8. | D. Water System Components (5 minutes)<br><br>1. Source<br>2. Intake structure/wells<br>3. Treatment<br>4. Storage<br>5. Distribution |

Instructor's Narrative

During this training program we will be covering the basic "need-to-know" of sanitary surveys. You will be provided a starting point for which to develop competency in the field of water supply. Although this information is applicable to all systems, we will be addressing small systems.

1. What is a sanitary survey? The classic "sanitary survey" was an inspection of a watershed to identify potential sources of contamination such as manure piles, septic tanks, pig farms, and a variety of other activities that could contaminate the source of water supply. This is not the type of survey we will be discussing. For the purpose of this course, we will define a sanitary survey as an onsite review of the water source, facilities, equipment, operation, and maintenance of a public water system for the purpose of evaluating the adequacy of such source, facilities, equipment, operation, and maintenance for producing and distributing an adequate supply of safe drinking water. Essentially, it is a review of a public system from the source to the consumer's tap. The next question is then:

2. Why should sanitary surveys be conducted? The purpose of a sanitary survey is to identify and correct problems of water supplies so that safe drinking water is provided to the consumers.

3. Who conducts sanitary surveys? Obviously, the answer in the near future will be "you do sanitary surveys." The people conducting sanitary surveys are those individuals who, through a combination of knowledge and experience, are competent to assess sanitary risks. They are also able to make sound, adequate, and economical recommendations. These individuals have to realize the limits of their knowledge and be cautious about giving advice beyond this limit. The final question is, then?

4. What are the activities of a sanitary survey? The activities of a sanitary survey provide a comprehensive, accurate record of the component parts of a small water system; assess the operating conditions and adequacy as a water system; and determine the effectiveness of the implementation of past recommendations regarding the system. This program of instruction presents the information needed by the inspector to effectively carry out the following activities:

   Inspect and Evaluate

   - Water source
   - Intake structure and wells
   - Treatment/conditioning facilities
   - Distribution system

**Basic Material**

Essentially this activity is an in-depth review of the facilities and processes involved with delivering potable water to the consumer.

**Review**

- Operation and maintenance practices
- Records, files, maps, correspondence
- Management practices and personnel needs
- Competency of technical and ancillary personnel
- Laboratory certification

This activity allows the inspector to have a long-term look at the system. The inspector's visit will only be a few hours in duration, a very short period when considering that the system must be meeting requirements 24 hours/day, 365 days/year. This review will help identify problem areas.

**Sample**

- Sample the source and the distribution system for bacteriological, physical, chemical, and radiological properties, and (as required) perform and evaluate field analyses.

This sample will provide a look at the water quality for that brief moment when the sample was collected. The inspector may use this for comparison with data (for the same period) that was collected/analyzed by others.

**Recommend**

- Complete the survey report and present data (both negative and positive comments) to operating personnel.

- Discuss problem areas and provide recommendations for their remedy.

This activity can have the most positive impact of any performed during a survey. Communicating to the operating personnel what the inspector's findings were and discussing recommendations for alleviating noted problems is the heart of a sanitary survey. However, if the recommendations are erroneous due to snap judgments on the part of the inspector or a failure to recognize the limits of the inspector's own knowledge, the results can do great damage.

**Notify**

- Notify the owner/operator, the public, and the regulatory agency of deficiencies (as required).

The inspector should communicate in writing the results of the survey to the appropriate individuals and organizations.

These have been the what, why, and who of sanitary surveys. For the rest of this program we will discuss the "need-to-know" details of how to conduct sanitary surveys. The questions that we will attempt to answer are the following:

**Basic Material**

1. What conditions might cause sanitary risks in each of the components of a water system?

2. How might these conditions be recognized?

We will be following the same path that the water would take through a system. We will be discussing the following:

Source: This water supply, whether above or below ground or rain catchment, must provide water in adequate quantity and quality to meet requirements.

Intake structure or wells: The water must be collected in a manner to provide the best possible water without degrading the source.

Treatment: Water that is of inferior quality must be treated to meet standards. This treatment must not create further problems.

Storage: These components provide adequate quantities to meet short-term demands that may exceed the capabilities of the source or treatment units. Storage must be provided in a manner to prevent contamination.

Distribution: This component dispenses the purified water to the consumers in the necessary volume at adequate pressure. In providing water to the consumer, care is taken to minimize the possibility of quality degradation.

# Unit I Overview

**Welcome**

**Workshop Sponsorship**

**Purpose**

**Workshop Objective**

**Introduction of Instructional Team**

**Schedule**

**Training Approach**

**Registration**

**Support**

**Introduction of Students**

# A Sanitary Survey is:

## A Review of:

- Source
- Facilities
- Equipment
- Operations & Maintenance

# SANITARY SURVEY

## Gen. Definition

- Evaluation of:

  O&M
  facilities
  equipment

* For Production & Distribution

## Class I

Every 3 years
Comprehensive

## Class II

As needed
May be limited

# Why Do Sanitary Surveys?

- Required by Law
- Determine adequacy
- Identify problem areas

# Who Does Sanitary Surveys?

- Personnel experienced in evaluating sanitary risks of water systems

# Activities Are:

- Inspect and Evaluate
- Review
- Sample
- Recommend
- Notify

# What Conditions Cause Sanitary Risks?

# How Can They Be Recognized?

# Components of Typical Water System

- Source
- Intake Structure
- Treatment
- Storage
- Distribution

# WATER SOURCES

- Hydrologic Cycle
- Wells
- Springs
- Surface
- Rain Catchments

## UNIT 2: WATER SOURCES

**Unit Summary**

General
Wells
Springs
Surface sources
Rain Catchments

**Unit Contents**

2a: General
- Hydrologic Cycle
- Adequate Quality
- Adequate Quantity

2b: Wells
- Sanitary Risks
- Surveying Wells

2c: Springs
- Sanitary Risks
- Surveying Springs

2d: Surface Sources
- Sanitary Risks
- Surveying Surface Sources

2e: Rain Catchments
- Sanitary Risks
- Surveying Catchments

## UNIT 2a: General - "The Need-to-Know"

**Unit Summary**

Hydrologic Cycle
Adequate Quality
Adequate Quantity

**Unit Objectives**

The students will be able to discuss the hydrologic factors affecting raw water quality and the importance of various water demands with a minimum of 80% accuracy.

**Logistics**

Approximate Presentation Time: 30 minutes

Instructor Materials

- Basic material
- Transparencies 2a-1 through 2a-5
- Overhead projector and screens
- Chalkboard

Student Materials

- Reference Manual, Unit 2a

Student Preparation

- Unit 2a should be read prior to the session

Unit References

- Manual of Individual Water Supply System (Part 1) Water Systems Handbook
- Water and Wastewater Engineering (Volume 1, Chapter 6)
- Water Treatment Plant Operation (Volume 1, Chapters 2 and 3)
- Water Supply System Operation (Chapter 2)

| INSTRUCTOR GUIDELINES | PRESENTATION OUTLINE |
|---|---|
| Use Transparency 2a-1. Introduce a discussion of the hydrologic cycle by explaining how natural contamination is accumulated in water as it flows through the parts of the cycle. Define each component and indicate flow direction. | A. Hydrologic Cycle (5 minutes)<br>1. Surface water<br>2. Ground water<br>3. Aquifers (confined and unconfined)<br>4. Zone of saturation<br>5. Flow direction of:<br>a. evaporation<br>b. transpiration<br>c. runoff<br>d. percolation<br>e. infiltration |
| Use Transparency 2a-2.<br><br>Describe both confined and unconfined aquifers.<br><br>Use Transparencies 2a-3 and 2a-4. | |
| Ask students to identify some major sources of pollution.<br><br>List sources on chalkboard as they are suggested by students.<br><br>Explain to students that these sources present hazards to drinking water, and, where possible, should be noted during a sanitary survey. | B. Sources of Water Contamination (5 minutes)<br>1. Proximity to:<br>a. nearby sewers/benjos<br>b. waste disposal sites<br>c. animal pasturing<br>d. chemical storage areas<br>2. Impact of high-flood runoff<br>3. Chemical composition of soil above rock<br>4. Decomposition of organic matter |
| Use questions to promote discussion of water and how it might become contaminated. | 5. Questions:<br>a. What are potential sources of contamination?<br>b. Which of the sources are relevant only to ground water, to surface water, to both? |
| Use Transparency 2a-5.<br><br>Explain the various water demands. | C. Water Demand (10 minutes)<br>1. Average daily demand<br>a. What is average demand?<br>b. How is it calculated?<br>c. Importance of water conservation to small water systems?<br>2. Impact of unaccounted-for water and unrealistic water rates |
| Refer to Reference Manual for guide for estimating average daily water requirements. | 3. Maximum demand<br>a. What is maximum daily demand?<br>b. How is it figured?<br>c. Importance to small water systems? |

| INSTRUCTOR GUIDELINES | PRESENTATION OUTLINE |
|---|---|
| | 4. Peak demand<br>a. What is peak demand?<br>b. How it is estimated?<br>c. Importance to small water systems? |
| Discuss questions concerning sanitary risks. | D. Sanitary Risks (10 minutes)<br>1. What type of source (surface, ground or combination)?<br>2. What is the total design production capacity?<br>3. What is the present average daily production?<br>4. What is the maximum daily production?<br>5. Does system have an "operational" master meter?<br>6. How many service connections are there?<br>7. Are service connections metered? |

## Instructor's Narrative

In this unit we will be discussing sources of water and its adequacy both in terms of quality and quantity. As a beginning we should discuss the hydrologic cycle. As the name implies, there is a continuous circulation of moisture and water. As a starting point and because of its size with respect to the total volume of water, let's pick up the cycle at the ocean. Radiation from the sun evaporates water from the ocean into the atmosphere. As the water vapor rises, it cools, creating clouds. From these clouds the moisture condenses and falls back to the earth's surface in the form of precipitation. Precipitation is essentially the source of all our fresh water. Part of this precipitation, after saturating the surface, runs off to streams. The water that enters the soil initially is detained in the plant root zone or zone of aeration. Water not utilized by the plants continues on through the subsurface formations under the influence of gravity. Eventually water reaches a zone where all the formation pores are filled with water, the zone of saturation. The upper edge of this zone is what is referred to as a water table. Depending on topography, geology, and the hydrostatic pressure, the water moves through the saturated formation and may reappear where the surface intersects the water table. The formations of strata that are saturated with water and from which ground water may be obtained are called aquifers.

To qualify as an aquifer, a geologic formation must contain pores or open spaces that are filled with water and large enough to permit the water to move at a perceptible rate. Aquifers may be either confined or unconfined. Unconfined aquifers have a free water surface. Confined or artesian aquifers have the water surface restricted both vertically and horizontally by formations that are impermeable. The water pressure within these aquifers is such that when the upper confining layer is broken, either by a well or fault-line, the water will rise above the top of the aquifer. In some cases, the water rises above the land surface and an artesian spring or well is created.

## Instructor's Narrative

What impact does the hydrologic cycle have on a sanitary survey? The inspector must realize that from the moment of inception, water is being contaminated by natural and manmade sources. The raindrops are formed around dust particles. Falling through the air, the water picks up additional pollutants such as gases, plant seeds, and chemicals such as sulfur, nitrogen, and carbon dioxide. Upon reaching the surface, water becomes further contaminated by, for instance, domestic and industrial waste. As it passes through subsurface formations it dissolves materials that impact on the quality of the water. What are some potential sources of contamination?

Sources of Water Contamination--

- Proximity to:
  - nearby sewers/benjos
  - waste disposal sites
  - animal pasturing
  - chemical storage areas
  - roadways
  - agricultural areas (pesticide spraying)
- Impact of high-flood runoff
- Chemical and physical characteristics of soil above rock
- Decomposition of organic matter

As stated earlier, a survey which is limited to identifying potential sources of contamination within a watershed or recharge zone is no longer a satisfactory "sanitary survey." In fact, due to limited resources, time, and personnel, a detailed evaluation of these areas will be beyond the scope of a survey. The inspector will be concerned with pollution in close proximity of the water supply source. The system owner should be questioned as to what provisions are made by the water system to limit contamination of the source (e.g., zoning restrictions, control of watershed, restricted use of impoundment, and periodic inspections).

Our discussion has thus far addressed the "quality" aspects of sources. There is another equally important factor of adequacy or quantity. In providing sufficient quantity of water to meet a system's requirements, we must evaluate not only the adequacy of the source, but also such things as storage capacity, treatment unit capacities, pump capacities, and distribution systems. In speaking of adequate quantity we refer to various types of <u>water demands</u>. Water demand is the total water used by a system in a specified period of time. The components of demand are residential, industrial, commercial, public, fire, other water utilities, main leakage, unaccounted-for water, and water used in treatment. We will briefly be discussing four types of demand: average daily demand, maximum demand, peak demand, and fire demand.

<u>Average daily demand</u> is the quantity of water utilized on an average day. Average daily demand is utilized in determining treatment unit capacities and raw water pump capacities. Average demand can be estimated by a combination of projected population figures and normal water usage requirements.

<u>Maximum daily demand</u> is the greatest amount of water that a system will use in one day. Experience with small residential water systems in the United States suggests that the maximum day is 1.5 to 3 times the average day. However, this

ratio may not apply to Micronesian water systems. In general, the smaller the water system, the greater the variation between the average and the maximum demand. The other type is maximum hourly demand. The maximum hourly demand is the greatest amount of water that will be used in any hour during a day. Maximum hourly demand is sometimes referred to as the peak hourly demand, although there will be short-term peak demand rates lasting for several minutes that will exceed the maximum hourly demand rate. Each type of system exhibits its own maximum hourly and short-term peak demands and the hours of peak occurrence will vary.

Maximum daily and hourly demands occur for those specified periods of time. Shorter-term demands are referred to as peak demands. This is the maximum amount of water necessary to meet the peak short-term demand rate that may occur several times during a day, usually during the peak hour period. The instantaneous peak may last for several minutes. The rate is particularly important in considering the sizing of the storage tank in a hydropneumatic system. The effective storage capacity is usually designed to meet these short-term peaks. In the absence of sufficient effective storage to meet extended peak demands, the wells, pumps and other system components must be capable of meeting the peak demands. The smaller the system, the greater the ratio of the peak demand to the average demand.

The final type of demand is fire demand. An adequate system provides sufficient water to meet peak demands for domestic, commercial, and industrial purposes as well as for firefighting. Fire demand is the amount of water capacity that must be designed into a water system for firefighting purposes. Fire flow is not included in the definition of average daily and maximum daily demands and must be added if fire protection is desired. Fire flows are usually expressed as gallons per minute to fight a fire of a certain duration.

A logical question at this point might be: "What does this discussion on demand have to do with a sanitary survey?" There are several sanitary or health-related impacts that these demands can have. Does the system or portions of it ever run out of water? This is one of the first questions that should be asked in determining adequacy of a system. If the the answer is yes, then a definite health problem exists. How much water is being produced and for what? This may be a question that is difficult to answer, particularly for smaller systems. Many of these systems not only lack service meters but lack master meters as well. In these cases, the amount of water produced may be estimated from pump rating curves and either pump hour meters or electric meters. The impact of unaccounted for water and leaks can increase the per capita demand substantially. This puts a strain on the source and the mechanical units of the system. Unaccounted-for water can have sanitary significance in terms of service outages, low pressures, and contamination problems resulting from cross connections.

These losses are also nonrevenue producing and, therefore, place a financial burden on the system. Coupled with unrealistic water rate structures, this can create real problems as required maintenance and replacements must be delayed because of lack of funds.

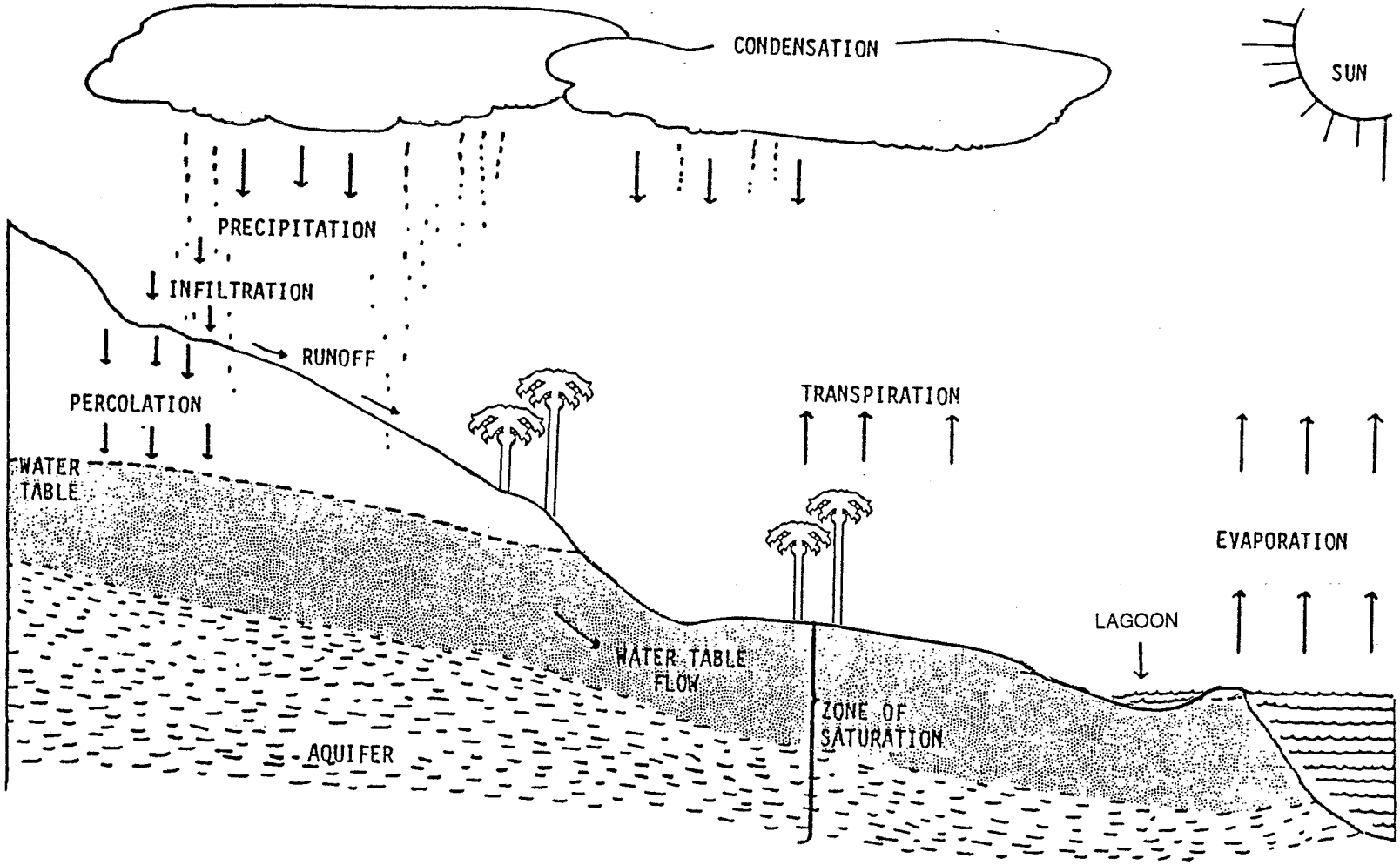


# Hydrologic Cycle

Transparency 2a-1

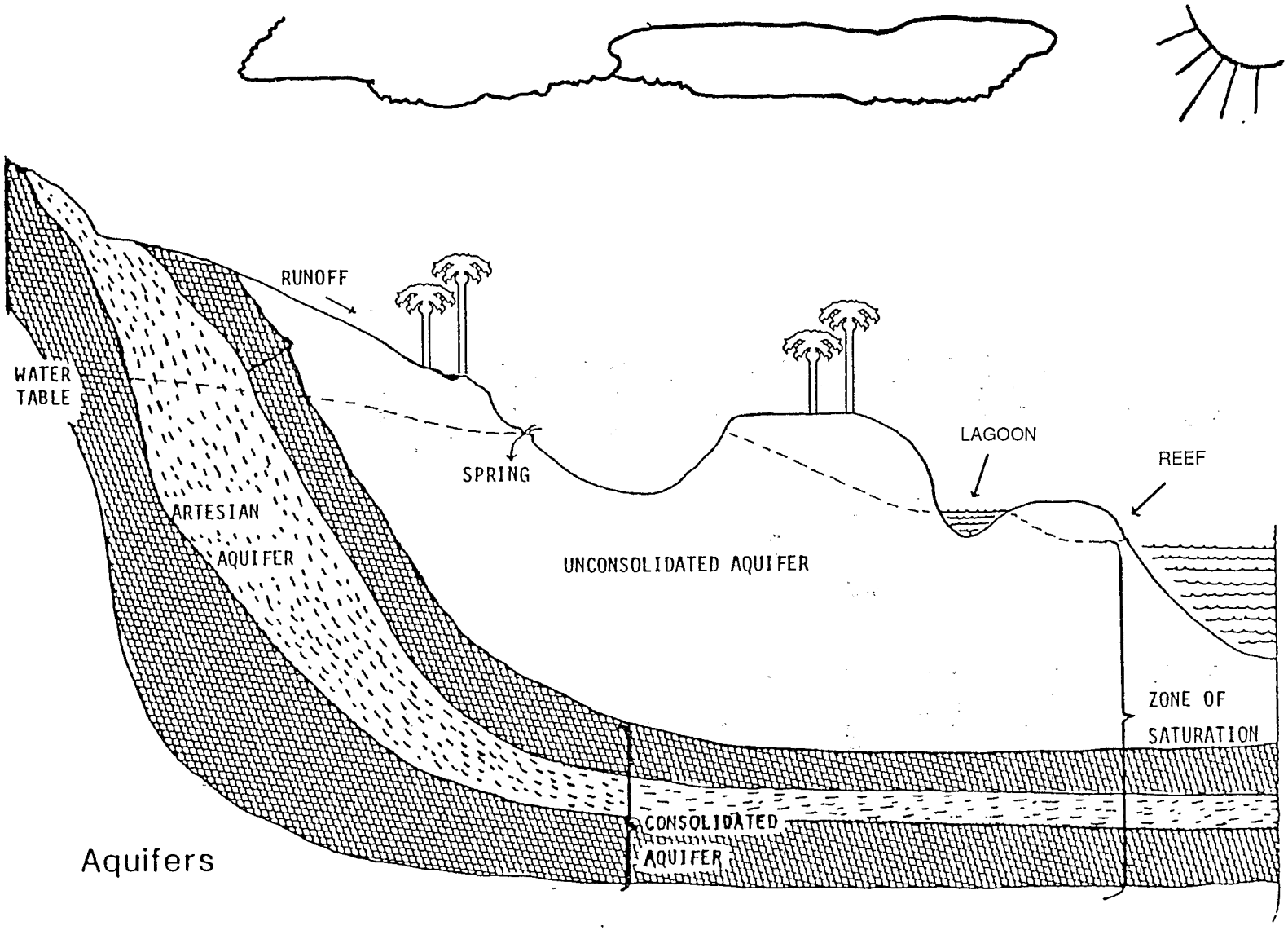


Aquifers

Transparency 2a-2

# What Are Sources of Contamination?

# Agents Affecting Water Quality

**Physical**

**Chemical**

**Biological**

**Radiological**

# Water Demand

- Average Daily
- Maximum Daily
- Peak
- Fire

## UNIT 2b: Wells - "The Need-to-Know"

### Unit Summary

Types and Characteristics
Sanitary Risk Factors
Exercise I: Identifying Sanitary Risk
Surveying Wells
Exercise II: Surveying Wells

### Unit Objectives

Students will be able to identify the characteristics, components, and sanitary risks of wells with a minimum of 80% accuracy.

### Logistics

Approximate Presentation Time: 60 minutes

Instructor Materials

- Basic material
- Transparencies 2b-6 through 2b-11
- Overhead projector and screen
- Chalkboard

Student Materials

- Reference Manual, Unit 2

Student Preparation

- Unit 2b should be read prior to the session

Unit References

- Small Water Systems Serving the Public (Chapter 5)
- Manual of Individual Water Supply Systems (Part II)
- Groundwater and Wells
- Well Drilling Operations
- Water Supply System Operation (Chapter 3)

| INSTRUCTOR GUIDELINES | PRESENTATION OUTLINE |
|---|---|
| Briefly describe differences between each type of well. | A. Types of Wells (5 minutes)<br>1. Drilled<br>2. Driven/Jetted<br>3. Bored<br>4. Dug |
| Use Transparency 2b-6.<br><br>Use Transparency 2b-7 to discuss components. | B. Components (10 minutes)<br>1. Casing<br>2. Sanitary seal<br>3. Grout<br>4. Pitless adapter<br>5. Screen<br>6. Pump<br>7. Vent |
| Briefly describe importance of each question on checklist.<br><br>Provide personal experiences or anecdotes to relate course material to actual situation an inspector may encounter.<br><br>Explain to students that activities of a water utility immediately adjacent to a well can have adverse impact. | C. Sanitary Risks (30 minutes)<br>1. Recharge Area/Surface Area<br>a. Is recharge area protected?<br>1) Ownership<br>2) Fencing<br>3) Ordinances<br>b. What is nature of recharge zone?<br>1) Agricultural<br>2) Industrial<br>3) Residential<br>4) Other<br><br>Emphasize that activities on recharge zone can impact on the quality of ground water.<br>c. Is site subject to flooding?<br>1) Impact of drainage of immediate area.<br>2) Problems of well field in floodplain of less than 100-year flood.<br>d. Is well located in proximity of a potential source of pollution? |

**Table 2-2. Recommended Minimum Distances Between Wells and Pollution Sources**

| Source | Feet from Well | Remarks |
|---|---|---|
| Watertight Sewers | 50 | Consult the regulatory agency for special local requirements. |
| Other Sewers | 100 | |
| Septic Tanks | 100 | |
| Sewage Field, Bed or Pit | 200 | |
| Animal Pens and Yards | 200 | |
| Benjo | 200 | |

Source: Small Water Systems Serving the Public, Chapter 5.

| INSTRUCTOR GUIDELINES | PRESENTATION OUTLINE |
|---|---|
| Use Transparency 2b-8. | D. Risk Evaluation<br>1. Points of risk on transparency:<br>a. Flooding from stream<br>b. Septic tanks/benjos<br>c. Gasoline station tanks<br>d. Sewers<br>e. Fuel storage on site<br>f. Proximity of roadways (spills) |
| Emphasize importance of measuring drawdown. | 2. Well Data<br>a. Depth of well<br>b. Drawdown<br>1) What is the well's drawdown?<br>2) How is it measured? |
| Use Transparency 2b-9. | 3. Construction<br>a. Depth of casing<br>- Protection against surface waters and undesirable aquifers |
| Explain importance of information requested by each question. | b. Depth of grout<br>1) Protection against surface water contamination<br>2) Minimum of 20 feet recommended<br>c. Does casing extend at least 12 inches above the floor or ground?<br>- Protection against flooding |
| Explain that concrete pad by itself is not sufficient because of burrowing animals and erosion. | d. Is well properly sealed?<br>1) Concrete pad in good condition<br>2) Well head seal<br>e. Does well vent terminate 18 inches above ground/floor level or above maximum flood level with return bend facing downward and screened?<br>- Keeps contaminated water and animals from entering well.<br>f. Does well have suitable sampling cock?<br>- Sampling cock at well point is helpful in identifying location of problems.<br>g. Are check valves, blowoff valves, and water meters maintained and operating properly?<br>h. Is upper termination of well protected (housed, fenced, barrier)?<br>i. Is lightning protection provided? |
| | 4. Well Pumps<br>a. Is intake located below the maximum drawdown?<br>b. Are foot valves and/or check valves accessible for maintenance? |

| INSTRUCTOR GUIDELINES | PRESENTATION OUTLINE |
|---|---|
| Use Transparencies 2b-10 and 2b-11 to discuss deficiencies. | E. Evaluation of Risks (15 minutes)<br><br>Deficiencies<br><br>1. Proximity of benjo<br>2. Proximity of underground fuel tank and lines<br>3. Use of well pit<br>4. Improper well vent<br>5. Lack of lightning protection<br>6. Lack of drain in well pit |

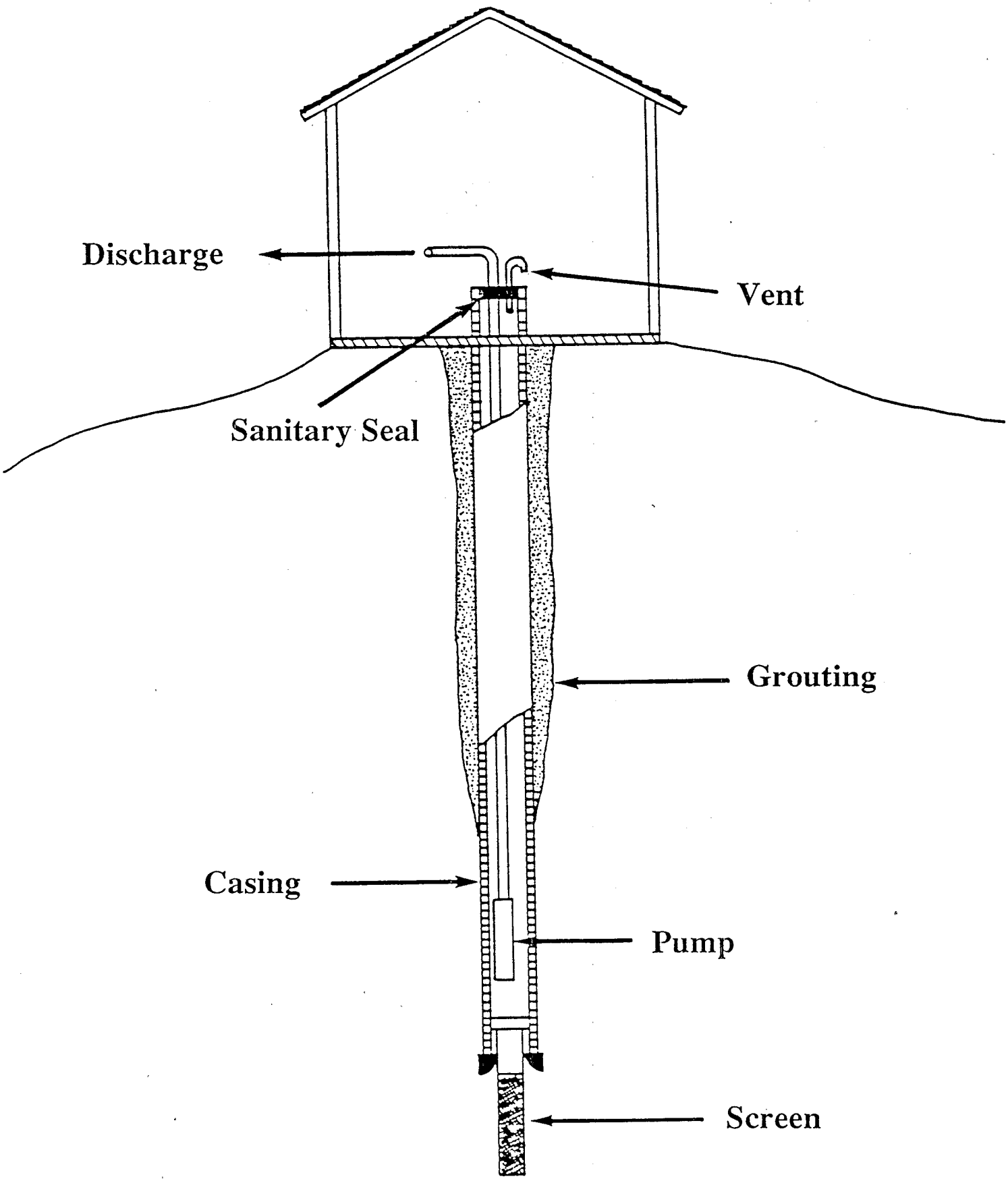


Transparency 2b-6

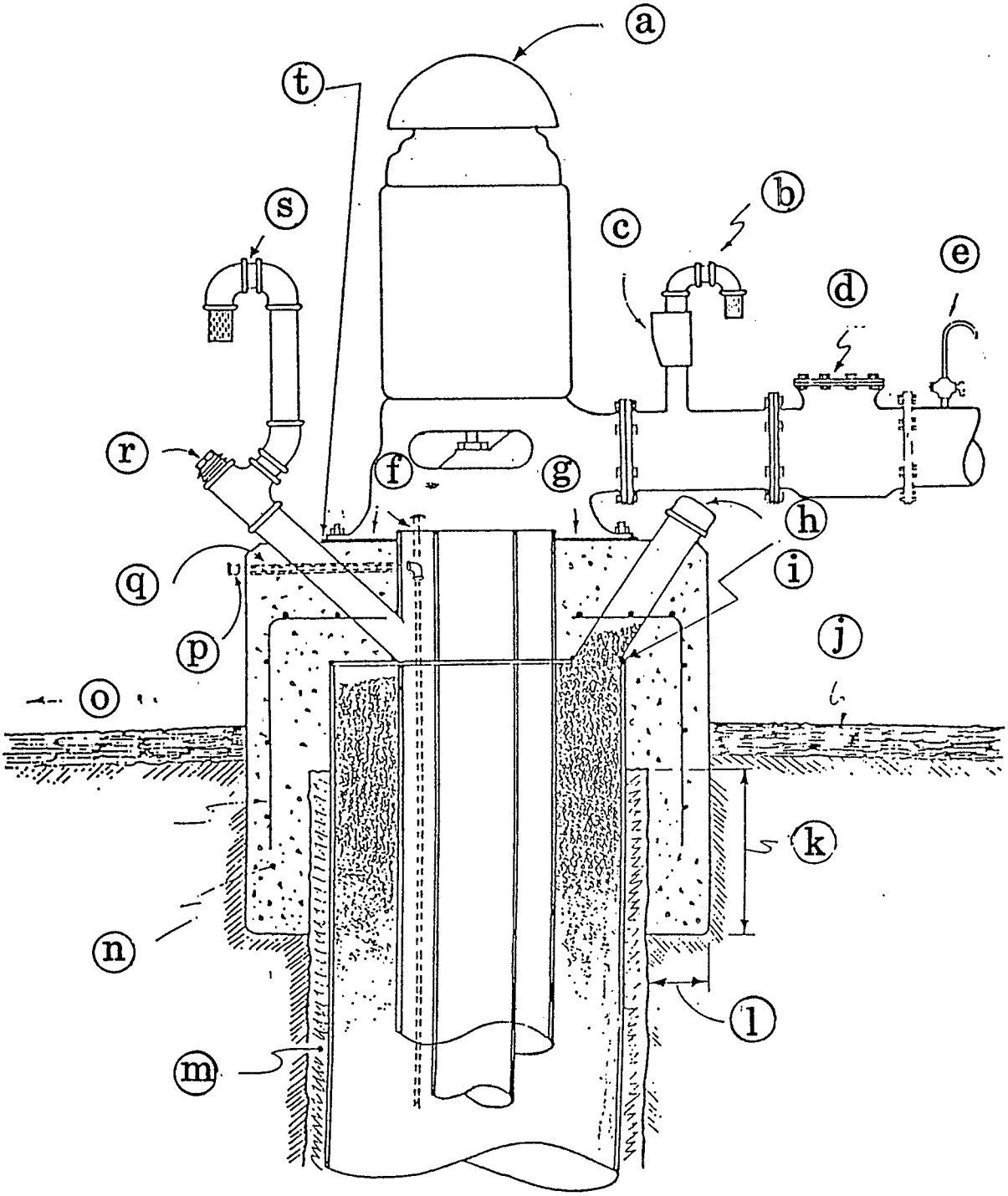


Surface features of a domestic water well

# Typical Site Plan

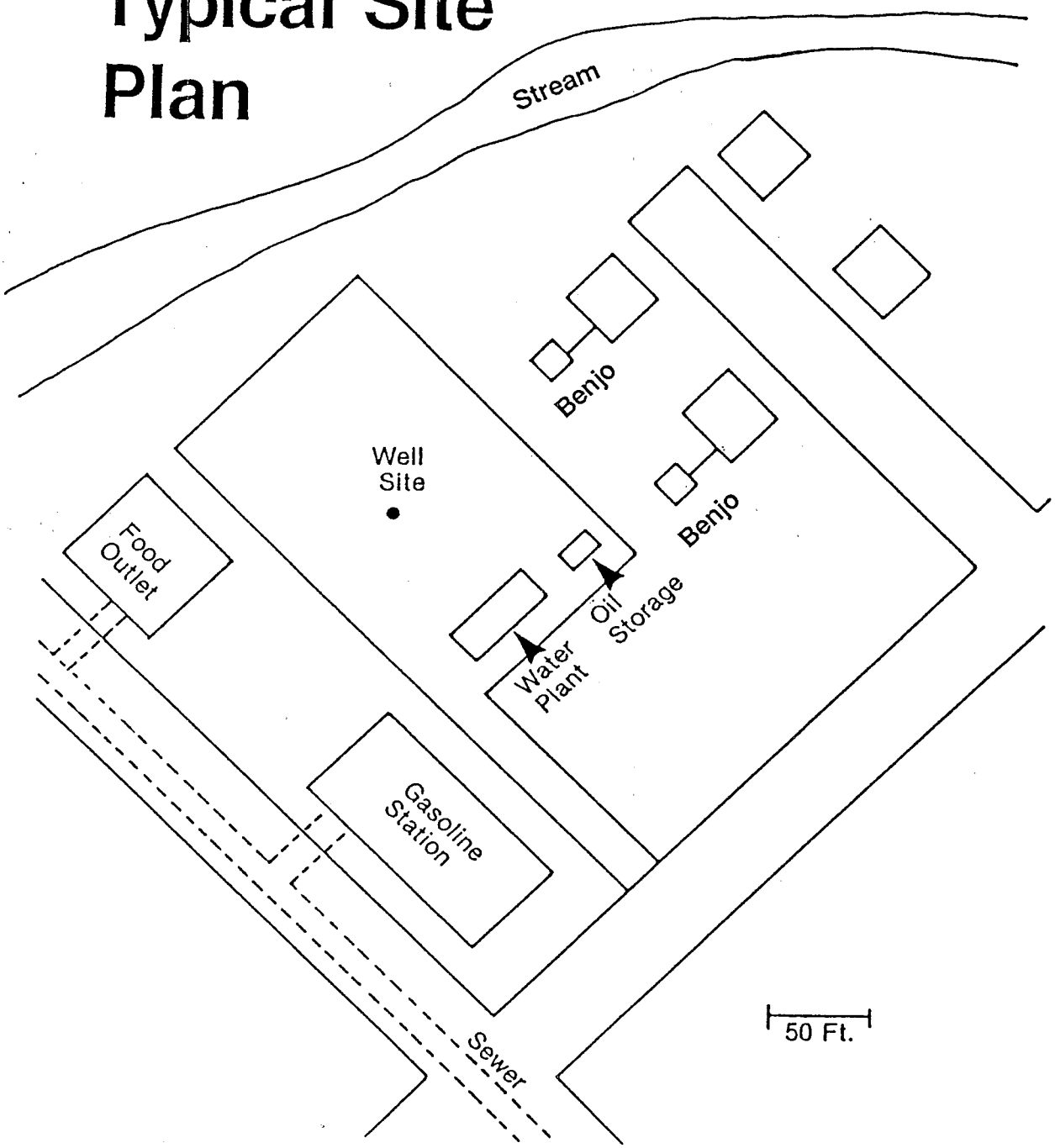

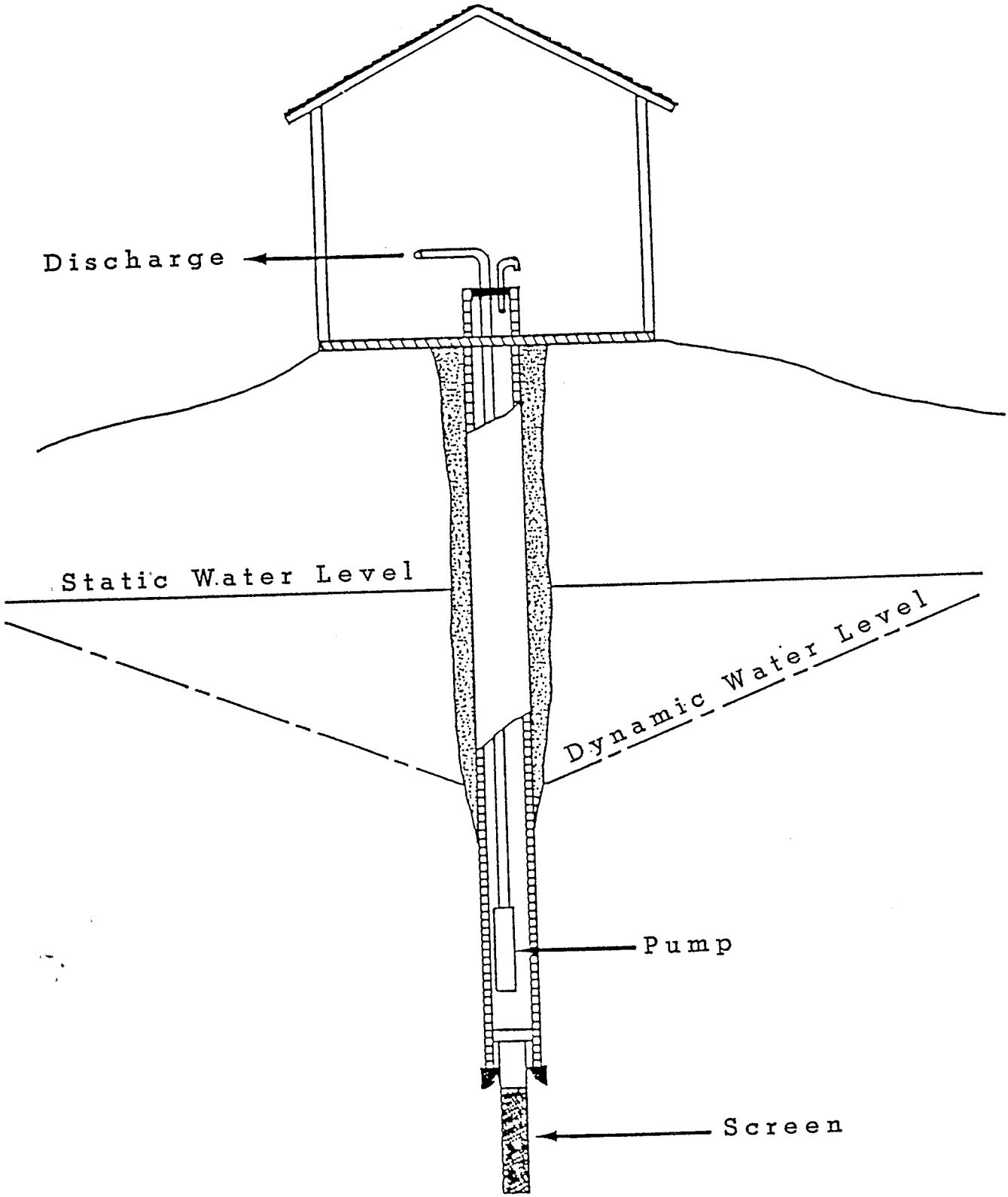


Transparency 2b-9

# Sanitary Risks

## Recharge Area/Surface Area

a. Is charge area protected?

Ownership
Fencing
Ordinances

b. What is nature of recharge area?

Agricultural
Industrial
Residential
Other

c. Is site subject to flooding?

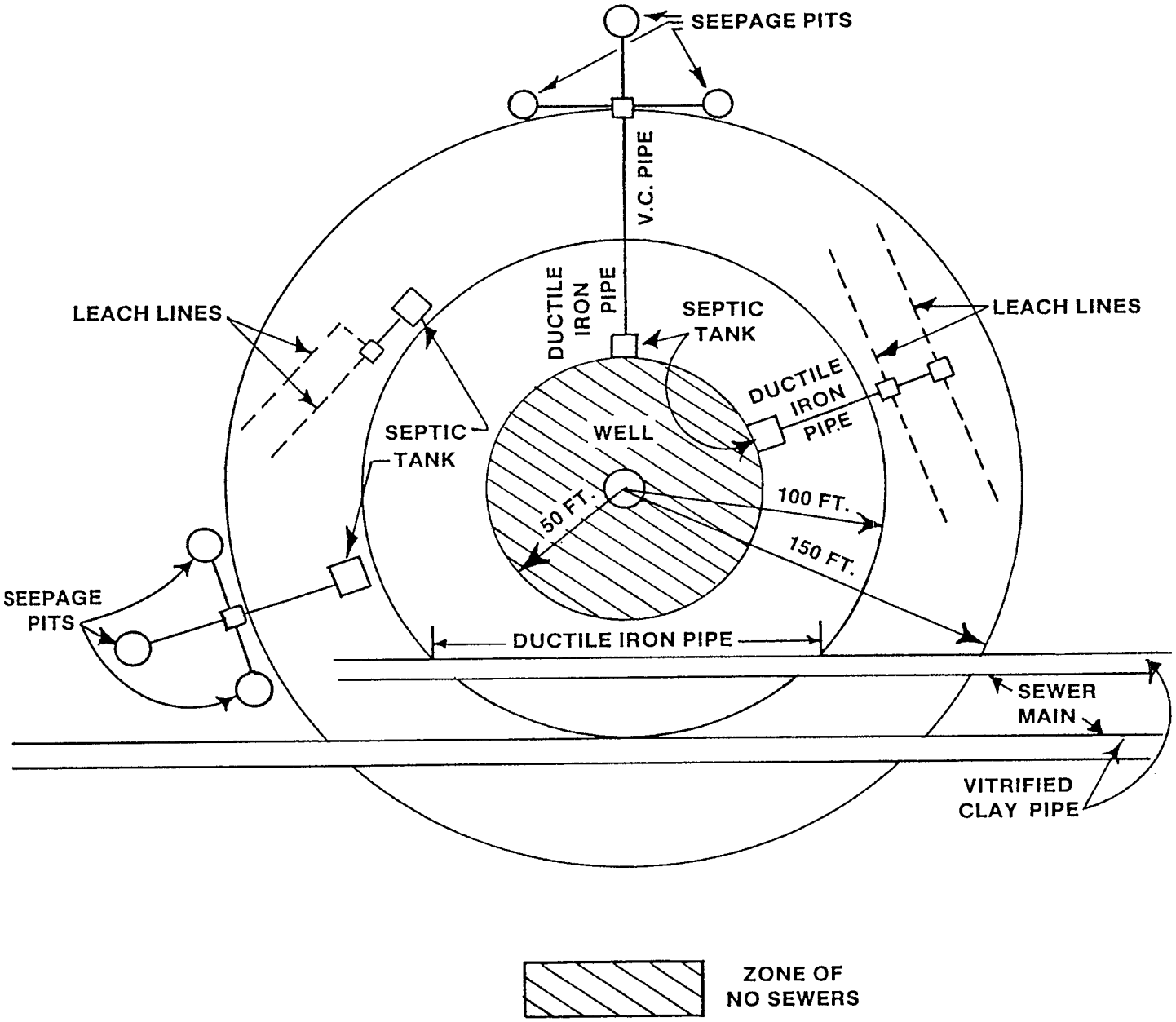


# Recommended Safe Distances From A Well

## UNIT 2c: Springs - "The Need-to-Know"

**Unit Summary**

Spring Source Collection System Components
Sanitary Risk Factors

**Unit Objectives**

Students will be able to identify the characterisitics and sanitary risks of springs with a minimum of 80% accuracy.

**Logistics**

Approximate Presentation Time: 45 minutes

Instructor Materials

- Basic material
- Transparencies 2c-12 through 2c-16
- Overhead projector and screen
- Chalkboard

Student Materials

- Reference Manual, Unit 2c

Student Preparation

- Unit 2c should be read prior to the session

Unit References

- Small Water Systems Serving the Public (Chapter 7)
- Manual of Individual Water Supply Systems (Part II)

Basic Material

| INSTRUCTOR GUIDELINES | PRESENTATION OUTLINE |
|---|---|
| Use Transparency 2c-12.<br><br>Use Transparency 2c-13. Point out major components of each type. Ask students to describe the function of each component. Explain as necessary. | A. Spring Collection System Components (10 minutes)<br>1. Spring flow interception<br>2. Storage tank/collection chamber<br>3. Screened overflow<br>4. Valved supply intake<br>5. Drain<br>6. Tank/chamber cover<br>7. Screened supply intake |
| Use Transparencies 2c-14 and 2c-15.<br><br>Point out major components. | B. Infiltration Galleries (5 minutes)<br>Components<br>a. Screen<br>b. Collector pipes<br>c. Gravel and sand bed<br>d. Backfill<br>e. Sump<br>f. Drainage |
| Use personal experiences and anecdotes to relate the course material to actual situations an inspector may encounter during a sanitary survey.<br><br>Emphasize that activities on recharge area have greater impact on water quality of springs than of wells.<br><br>Use Transparency 2c-13. Briefly explain importance of items. | C. Sanitary Risks (30 minutes)<br>1. Recharge Area/Surface Area<br>a. Is recharge area protected?<br>1) Ownership<br>2) Fencing<br>3) Ordinances<br>b. What is nature of recharge area?<br>1) Agricultural<br>2) Industrial<br>3) Residential<br>4) Other<br>c. Is site subject to flooding?<br>2. Construction<br>a. Collection chamber<br>1) Watertight<br>2) Adequately covered and locked<br>3) Drain provided for cleanout<br>4) Proper overflow provided<br>b. Supply intake<br>1) Screened<br>2) Properly located<br>3. Site Protection<br>a. Diversion ditch for surface drainage<br>b. Site fencing with secured access<br>4. Water Quality<br>- What conditions cause changes to quality of the water? |

| INSTRUCTOR GUIDELINES | PRESENTATION OUTLINE |
|---|---|
| Use Transparency 2c-16. Have students identify deficiencies of illustration. | D. Evaluation of Springs<br>Deficiencies:<br>1. Inadequate cover (not tight fitting, not lockable)<br>2. Proximity to pollutant source<br>3. No site fencing<br>4. No drain<br>5. No exterior valves<br>6. Improper overflow (no screen, no overflow drainage provisions)<br>7. No surface drainage division<br>8. Improper intake (located on bottom, no screen) |

## UNIT 2d: Surface Sources - "The Need-to-Know"

**Unit Summary**

Types and Characteristics
Sanitary Risks

**Unit Objectives**

Students will be able to determine the protection afforded surface sources and evaluate sanitary risks to surface sources with a minimum of 80% accuracy.

**Logistics**

Approximate Presentation Time: 45 minutes

Instructor Materials

- Basic material
- Transparencies 2d-17 through 2d-19
- Overhead projector and screen
- Chalkboard

Student Material

- Reference Manual, Unit 2d

Student Preparation

- Unit 2d should be read prior to the session

Unit References

- Small Water Systems Serving the Public (Chapter 8)
- Manual of Individual Water Supply Systems (Part III)
- Water Treatment Plant Operation (Volume 1, Chapters 2 and 3)
- Water Supply System Operation (Chapter 2)

# SPRINGS

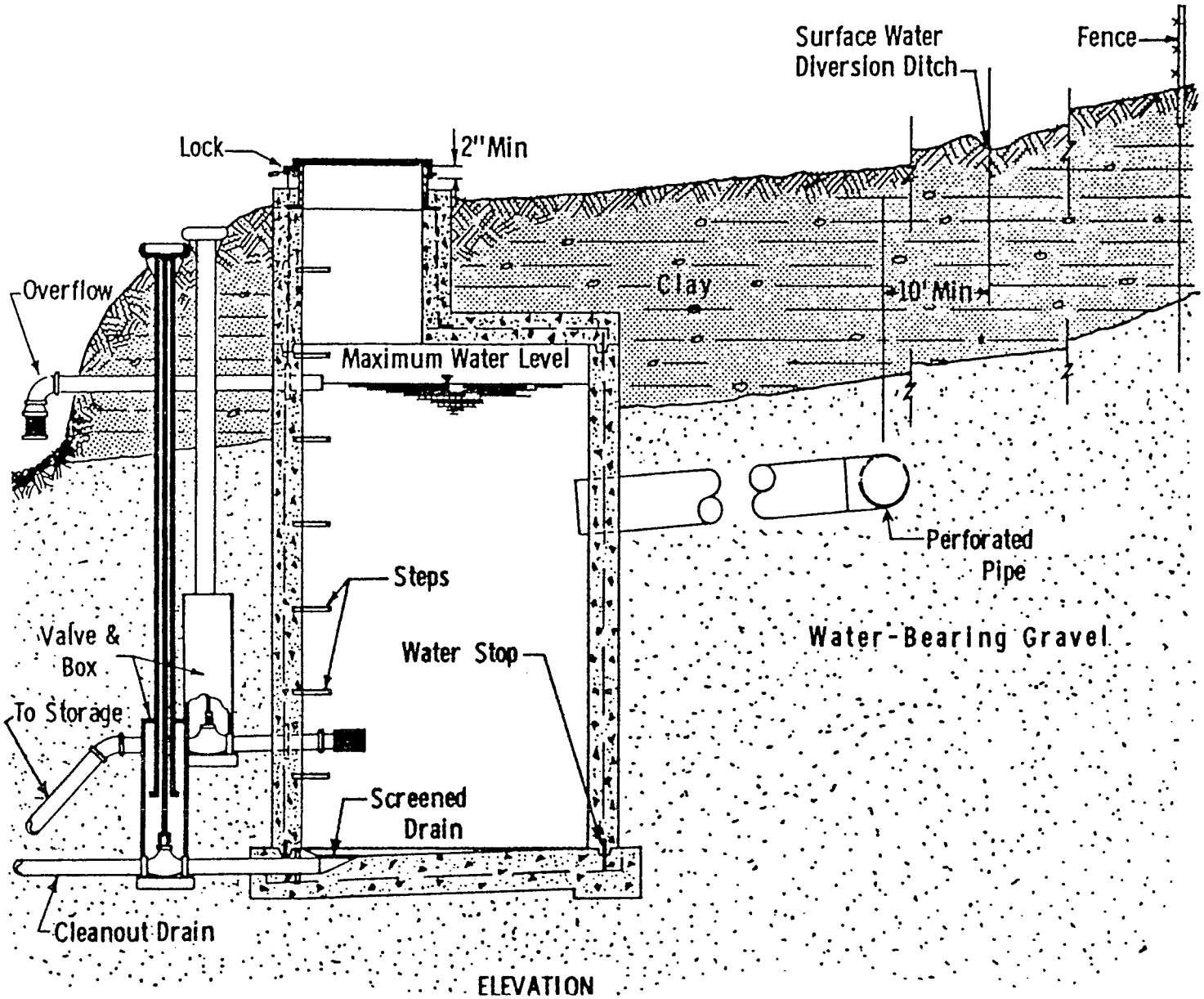


Transparency 2c-13

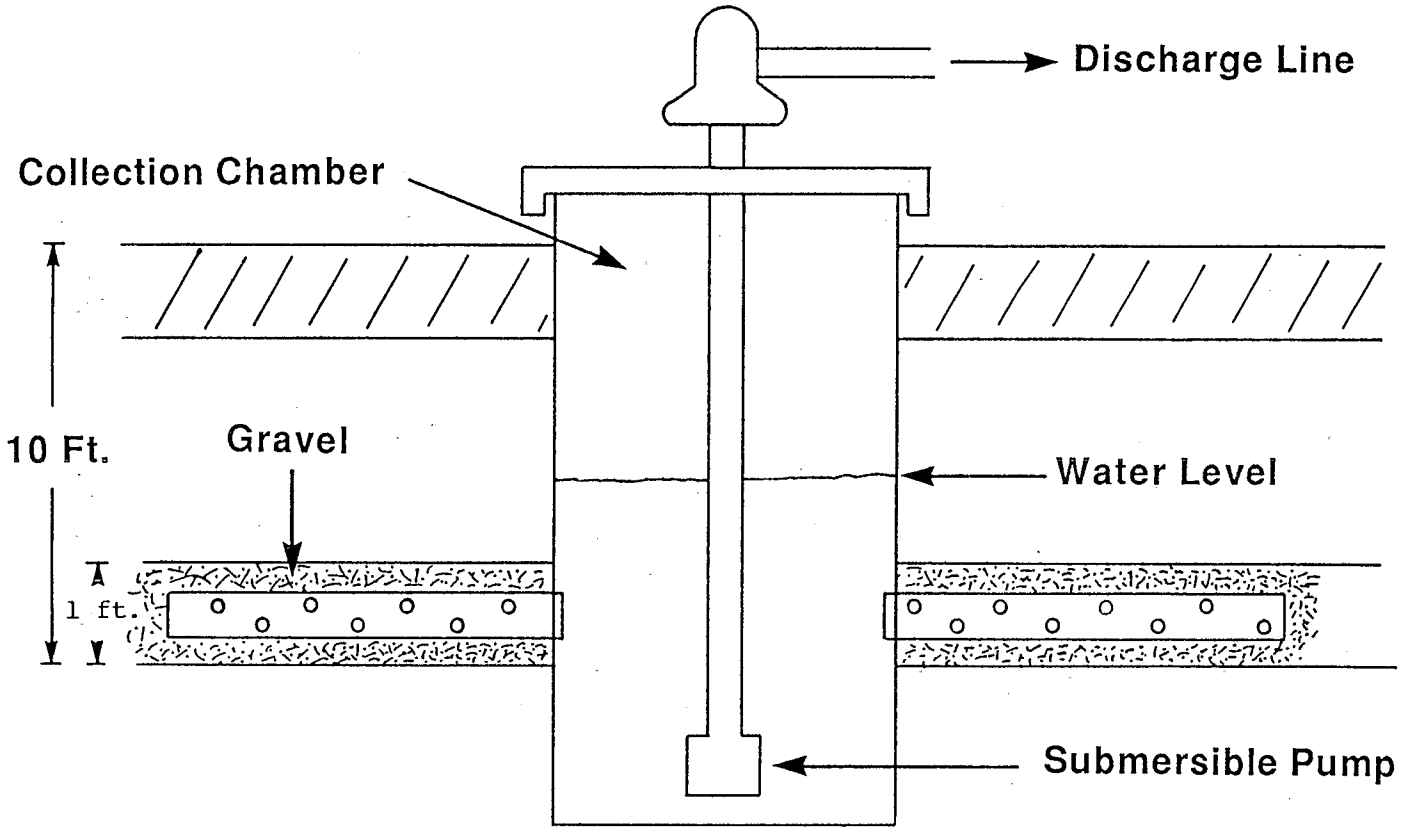


Infiltration Gallery

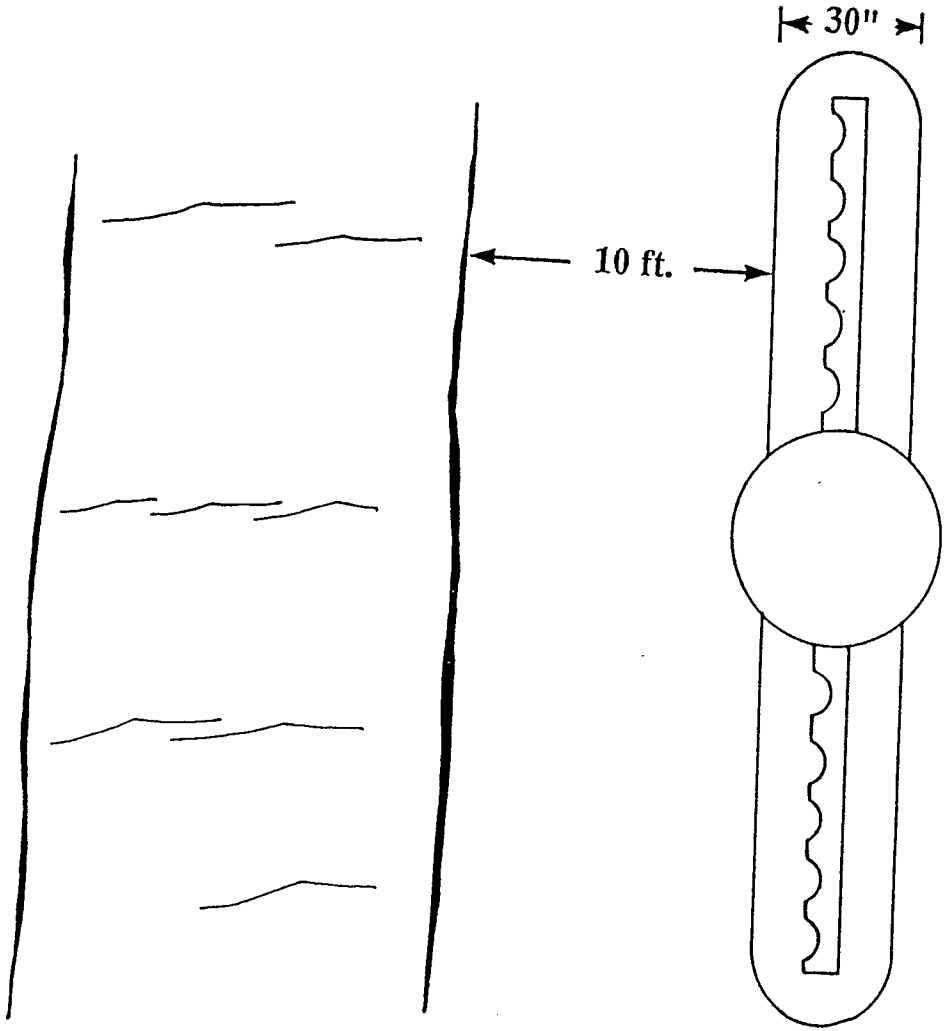


# INFILTRATION GALLERY

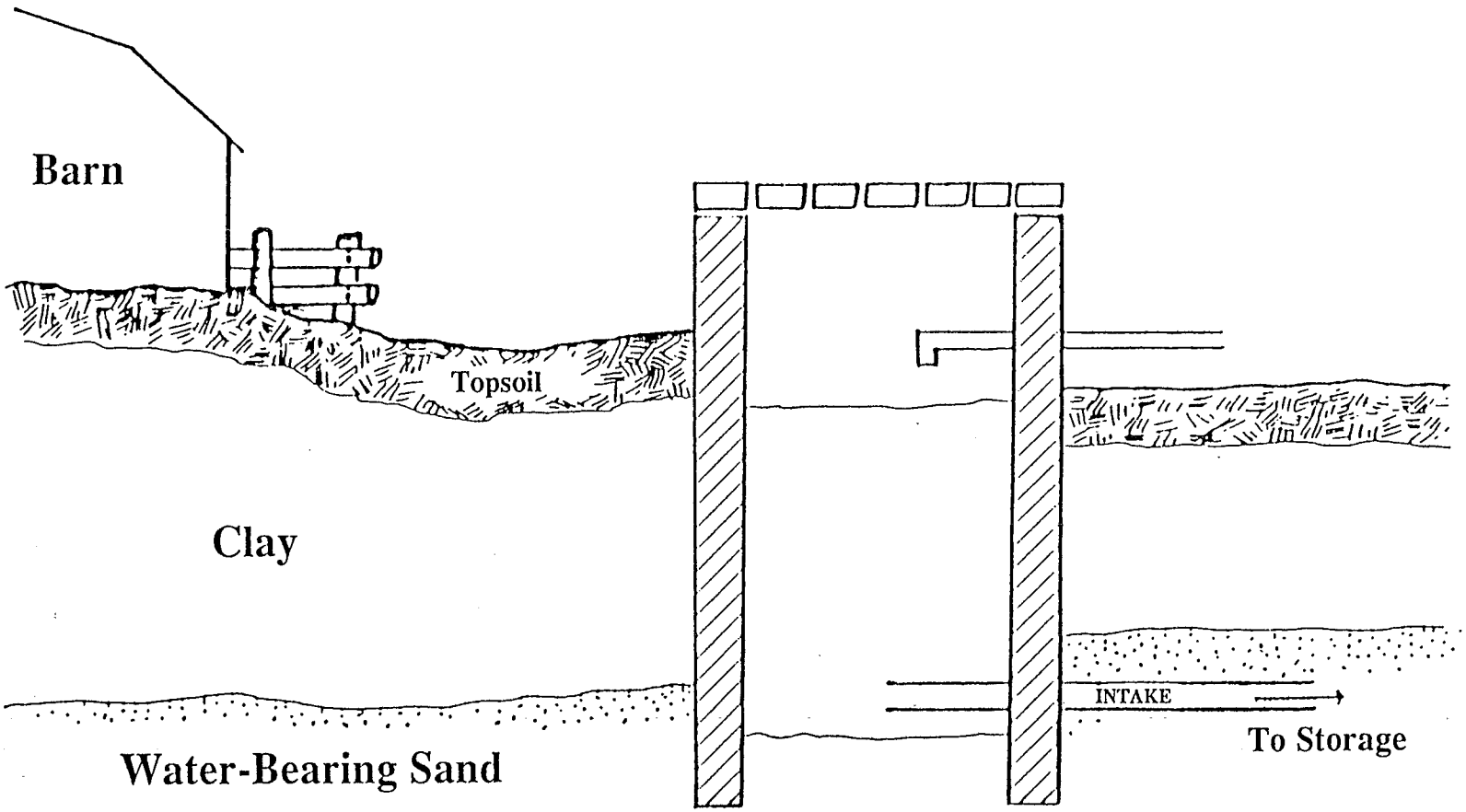


# Identify Deficiencies

| INSTRUCTOR GUIDELINES | PRESENTATION OUTLINE |
|---|---|
| Use Transparency 2d-17. | A. Types and Characteristics (15 minutes) |
| Use Transparency 2d-18. Use the cistern as an example of how a controlled catchment functions. | 1. Controlled Catchments (5 minutes)<br>a. Collects rainfall runoff from defined area<br>b. Water stored in cistern or reservoir<br>c. Predictable yield (historical data)<br>d. System components<br>1) Watertight collection chamber<br>2) Initial runoff diversion<br>3) Screened intake, overflow, drain lines<br>e. Larger systems involve paved ground area for collection |
| Use questions to guide class discussion. | - What potential pollution sources might contaminate this system? |
| Use Transparency 2d-19. | 2. Ponds (5 minutes) |
| Discuss potential problems involved in watershed use for small systems. | a. Collect runoff from watershed<br>b. Predictable yield<br>c. Large storage capacity<br>d. Watershed control essential<br>1) Protection from pollution sources<br>2) Protection against erosion, drainage from animal areas, etc.<br>e. System components (ponds)<br>1) Area; minimum 1-year storage<br>2) Fenced<br>3) Minimum depth: 8 feet<br>4) Screened inlet |
| | 3. Questions |
| Use questions to guide class discussion. | a. What factors should be considered when describing a pond or lake?<br>b. Is control of activity or watershed necessary? If so, to what degree?<br>c. How might watershed control be accomplished? |
| Explain use of streams as source. | 4. Streams and Rivers (5 minutes) |
| List pros and cons of system on chalkboard. | a. Less desirable source<br>1) Large watershed<br>2) May require very sophisticated treatment<br>3) Sensitive to adverse temperature levels typical during low-water stages |
| Draw rough sketch of a typical intake system on chalkboard. | b. High water stage best for diverting water to storage |

| INSTRUCTOR GUIDELINES | PRESENTATION OUTLINE |
|---|---|
| | c. System components<br>1) Screened intakes located upstream from pollution sources<br>2) Storage reservoir |
| Use question to guide class discussion. | - What factors are of particular importance in evaluating the use of streams as sources? |
| | B. Sanitary Survey of Surface Waters (30 minutes) |
| Explain impact of watershed activities on water quality. Note hazards of types of land use. | 1. What is the nature of the watershed?<br>a. Industrial<br>b. Agricultural<br>c. Forest<br>d. Residential |
| Give an example of a watershed control program (see Chapter 3, Water Treatment Plant Operation). | 2. What is the size of the owned/protected area of the watershed?<br>- Importance of protecting watershed |
| Describe effectiveness of types of control. | 3. How is the watershed controlled?<br>a. Ownership<br>b. Ordinances<br>c. Zoning restrictions |
| | 4. Has management had a watershed survey performed?<br>- Importance of utility to be concerned with land use of watershed |
| Emphasize importance of contingency planning to students. | 5. Is there an emergency spill response plan?<br>a. Identification of potential spill sites and types of contaminants<br>b. Need for spill plan<br>c. Need for prior coordination |
| | 6. Is the source adequate in quantity?<br>a. Present demands<br>b. Future demands<br>c. Trends |
| Use personal experiences and anecdotes to relate course material to actual situations an inspector may encounter. | 7. Is the source adequate in quality?<br>a. Present quality<br>b. Trends |
| | 8. Is there any treatment provided in the reservoir (algae control, insect control, chemical addition)? |
| Describe necessity to control area immediately around intake. | 9. Is the area around the intake restricted for a radius of 200 feet?<br>- Reduce bacterial and organic contamination |

| INSTRUCTOR GUIDELINES | PRESENTATION OUTLINE |
|---|---|
| | 10. Are there any sources of pollution in the proximity of the intakes?<br>- Wastewater discharges |
| Draw examples of intake structures on blackboard. Discuss both stream and impoundment intakes. | 11. Are multiple intakes, located at different levels, utilized?<br>- Ability to draw best quality water<br><br>12. Is the highest quality water being drawn?<br>- Raw water testing<br><br>13. How often are intakes inspected?<br>a. Screen integrity<br>b. Periodic cleaning |
| Have students suggest conditions that might influence water quality. | 14. What conditions cause fluctuations in quality?<br>a. Rain<br>b. Wind<br><br>15. Review of dam inspection (if applicable in state)<br>a. Burrowing animals<br>b. Trees |

# SURFACE WATER

## Controlled Catchments

## Rivers

## Streams

## Lakes

## Reservoirs

# Controlled Catchments

# Ponds

## UNIT 2e: Rain Catchments - "The Need-to-Know"

### Unit Summary

Types and Characteristics
Sanitary Risks

### Unit Objectives

A major function of the sanitary survey is to determine the degree of protection afforded the source. Rain catchments are used as water sources. At the end of this unit the student should be able to identify the following with 80% accuracy:

1. Characteristics of rain catchments
2. Sanitary risks to rain catchments

### Logistics

Approximate Presentation Time: 45 minutes

Instructor Materials

- Basic material
- Transparencies 2e-20 through 2e-21
- Overhead projector and screen
- Chalkboard

Student Material

- Reference Manual, Unit 2e

Student Preparation

- Unit 2e should be read prior to the session

Basic Material

| INSTRUCTOR GUIDELINES | PRESENTATION OUTLINE |
|---|---|
| Use Transparencies 2e-20 and 2e-21. Use Transparency 2e-20. Point out major components of rain catchments. Ask students to describe the function of each component. | A. Rain Catchment System Components<br>1. Root drainage interception<br>2. First flush box<br>3. Screened supply intake<br>4. Storage tank/collection chamber<br>5. Valved discharge line<br>6. Drain |
| Use personal experiences and anecdotes to relate the course material to actual situations during a sanitary survey. | B. Sanitary Risks<br>1. Roof drainage<br>2. Protected catchment<br>3. Cross connections with community system<br>4. Composition of roof and paint. |

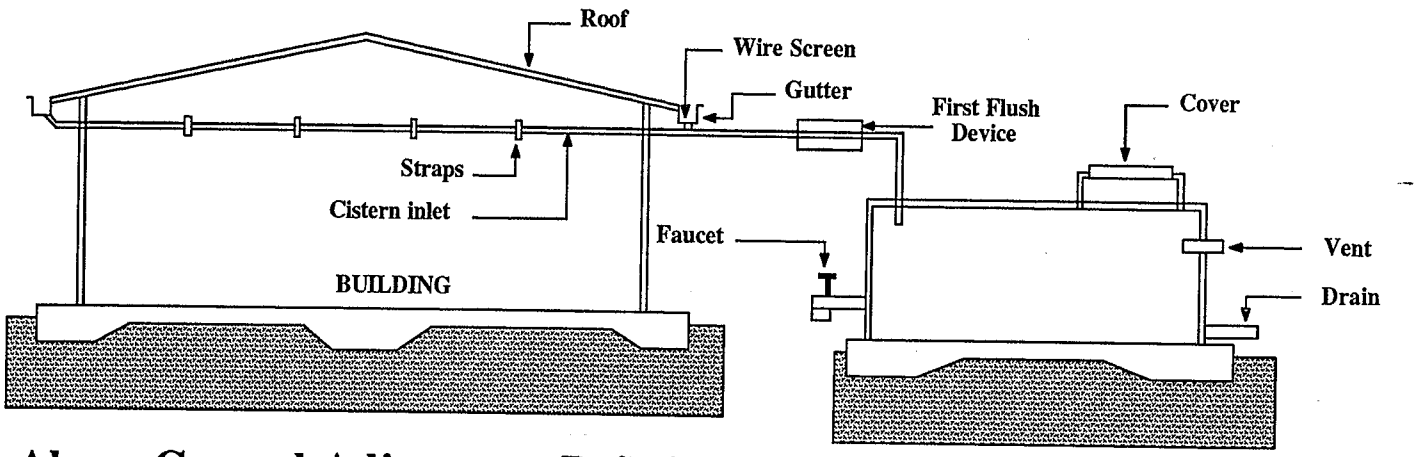


# Above Ground Adjacent to Building

Not to Scale

Transparency 2e-20

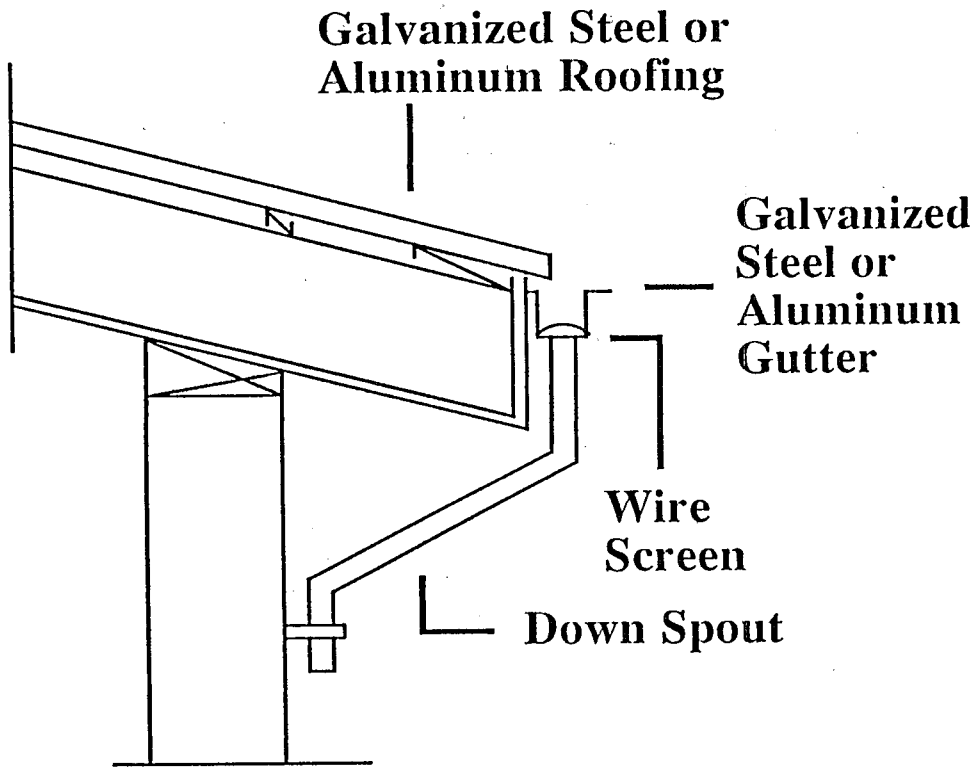


# TYPICAL METAL ROOF

## UNIT 3: PUMP FACILITIES - "THE NEED-TO-KNOW"

### Unit Summary

Types of Pumps
Sanitary Risks

### Unit Objectives

Students will be able to evaluate the adequacy of pumps and pump operation and identify sanitary risks with a minimum of 80% accuracy.

### Logistics

Approximate Presentation Time: 45 minutes

Instructor Materials

- Basic material
- Transparencies 3-1 through 3-12
- Chalkboard

Student Materials

- Reference Manual, Unit 3

Student Preparation

- Unit 3 should be read prior to the session.

Unit References

- Manual of Instruction for Water Treatment Plant Operators (Chapter 19)
- Environmental Engineering and Sanitation (Chapter 3)
- Well Drilling Operations
- Operation of Water Supply and Treatment Facilities
- Water Supply Engineering (Chapter 15)
- Water Supply System Operation (Chapters 3 and 5)

| INSTRUCTOR GUIDELINES | PRESENTATION OUTLINE |
|---|---|
| Use Transparencies 3-1 and 3-2. Explain pumps:<br><br>Types<br>Construction features<br>Operation | A. Major Types and Characteristics (10 minutes)<br>1.<br>a. Positive Displacement<br>b. Centrifugal<br>c. Jet<br>d. Rotary |
| | 2.<br>a. Shallow well<br>b. Deep well |
| Use Transparencies 3-3 through 3-12. | See Table 3-1 for instructor review information. |
| Use questions to encourage discussion and present additional information. | 3. Questions:<br>a. What are the advantages and disadvantages of each type?<br>b. For what situation is each type best suited? |
| Ask students to suggest a sanitary risk in each of the factors, and a means of ensuring against the risk.<br><br>Make rough sketches on chalkboard for explanation when appropriate.<br><br>Use personal experiences and anecdotes to relate the course material to actual situations an inspector may encounter during a survey. | B. Sanitary Risks (10 minutes)<br>1. General<br>a. Number (include reserve), location, and type<br>b. Rated capacity<br>1) When was pump last rated?<br>2) Is pump metered?<br>c. Condition of equipment<br>1) Are pumps operable?<br>2) What is state of repair of pumps?<br>d. What type of lubricant is used?<br>e. Emergency power system<br>1) What type?<br>2) Frequency of function testing?<br>3) Record of primary power failures.<br>4) Automatic or manual switchover?<br>5) Are backup pumps/motors provided? |
| Point out what problems can occur from lubricants. Oil contamination, non-potable water as lubricant.<br><br>Point out the importance of each of these items. | 2. Pumping Stations<br>a. Is all electro/mechanical rotating equipment provided with protective guards?<br>b. Are controls functioning properly and adequately protected?<br>c. Are underground compartments and suction wells waterproof?<br>d. Are permanently mounted ladders sound and firmly anchored?<br>e. Is facility properly protected against trespassing and vandalism?<br>1) Vandalism<br>2) Animals<br>3) Flooding |

# TABLE 3-1. Types and Characteristics of Pumps

| Type of Pump | Practical Suction Lift | Usual Well-Pumping Depth | Usual Pressure Heads | Advantages | Disadvantages | Remarks |
|---|---|---|---|---|---|---|
| Reciprocating:<br>1 Shallow well<br>2 Deep well | 22 - 25 ft.<br>22 - 25 ft. | 22 - 25 ft.<br>Up to 600 ft. | 100 - 200 ft.<br>Up to 600 ft. above cylinder | Positive action. Discharge against variable heads. Pumps water containing sand and silt. Especially adapted to low capacity and high lifts. | Pulsating discharge. Subject to vibration and noise. Maintenance cost may be high. May cause destructive pressure if operated against closed valve. | Best suited for capacities of 5 - 25 gpm against moderate to high heads. Adaptable to hand operation. Can be installed in very small diameter wells (2" casing).<br>Pump must be set directly over well (deep wells). |
| Centrifugal:<br>1 Shallow well<br>a)Straight centrifugal (single stage) | 20 ft. max. | 10 - 20 ft. | 100 - 150 ft. | Smooth, even flow. Pumps water containing sand and silt. Pressure on system is even and free from shock. Low-starting torque. Usually reliable and good service life. | Loses prime easily. Efficiency depends on operating under design heads and speed. | |
| (b)Regenerative vane turbine type (single stage) | 28 ft. max. | 28 ft. | 100 - 200 ft. | Same as straight centrifugal except not suitable for pumping water containing sand or silt. They are self-priming. | Same as straight centrifugal except maintains priming easily. | Reduction in pressure with increased capacity not as severe as straight centrifugal. |
| Deep well<br>a) Vertical line shaft turbine (multistage) | Impellers submerged. | 50 - 300 ft. | 100 - 800 ft. | Same as shallow well turbine.<br>All electrical components are accessible, above ground. | Efficiency depends on operating under design head and speed. Requires straight well large enough for turbine bowls and housing. Lubrication and alignment of shaft critical. | |

# TABLE 3-1. Types and Characteristics of Pumps

PAGE 2

| Type of Pump | Practical Suction Lift | Usual Well-Pumping Depth | Usual Pressure Heads | Advantages | Disadvantages | Remarks |
|---|---|---|---|---|---|---|
| Centrifugal (Cont.)<br>b) Submersible turbine (multistage) | Pump and motor submerged. | 50 - 400 ft. | 50 - 400 ft. | Same as shallow well turbine. | Abrasion from sand. Repair to motor or pump requires pulling from well. Sealing of electrical equipment from water vapor critical. Abrasion from sand. | 3500 RPM models, while popular because of smaller diameters or greater capacities, are more vulnerable to wear and failure from sand and other causes. |
| Jet:<br>1 Shallow well | 15 - 20 ft. below ejector | Up to 15 - 20 ft. below ejector | 80 - 150 ft. | High capacity at low heads. Simple in operation. Does not have to be installed over the well. No moving parts in well. | Capacity reduces as lift increases. Air in suction or return line will stop pumping. | |
| 2 Deep well | 15 - 20 ft. below ejector | 25 - 120 ft. 200 ft. max. | 80 - 150 ft. | Same as shallow well jet. Well straightness not critical. | Same as shallow. Lower efficiency, especially at greater lifts. | The amount of water returned to ejector with increased lift - 50% of total water pumped at 50 ft. lift and 75 % at 100 ft. lift. |
| Rotary:<br>1 Shallow well (gear type) | 22 ft. | 22 ft. | 50 - 250 ft. | Positive action. Discharge constant under variable heads. Efficient operation. | Subject to rapid water if water contains sand or silt. Wears of gears reduces efficiency. | |
| 2 Deep well (Helical rotary type) | Usually submerged. | 50 - 500 ft. | 100 - 500 ft. | Same as shallow well rotary. Only one moving pump device in well. | Same as shallow well rotary except no gear wear. | A cutless rubber stator increases life of pump. Flexible drive coupling has been weak point in pump. Best adapted for low capacity and high heads. |

# PUMPS

Transparency 3-1

# PUMPS

## Types

## Operational Consideration

## Sanitary Risks

# Classification Of Pumps

- Pumps
  - Positive Displacement
    - Reciprocating
    - Rotary
    - Blow Case
  - Kinetic
    - Centrifugal
    - Regenerative
    - Special

# RECIPROCATING PUMPS

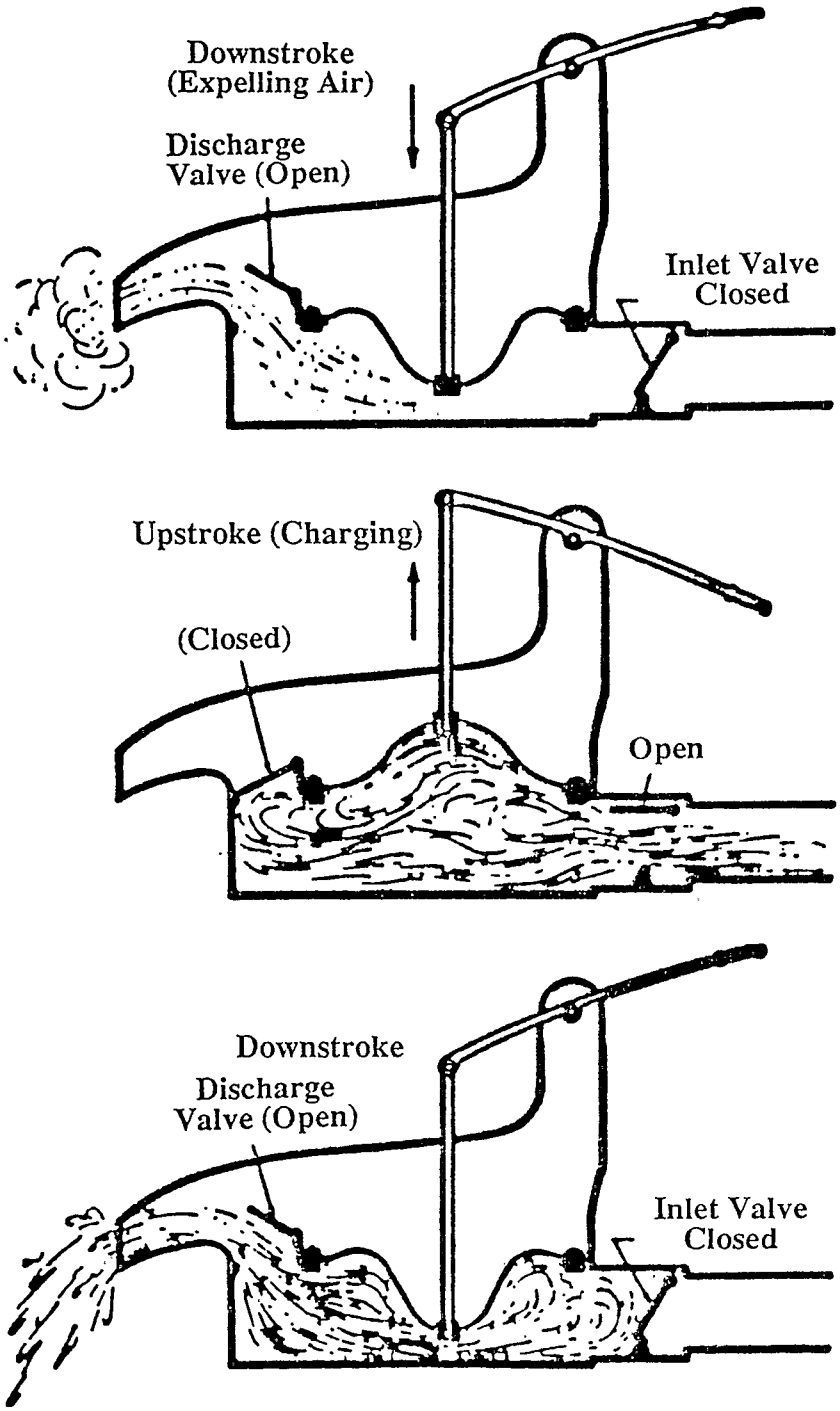


PROGRESSIVE OPERATING STROKES OF A CLOSED-DIAPHRAGM TYPE OF PUMP

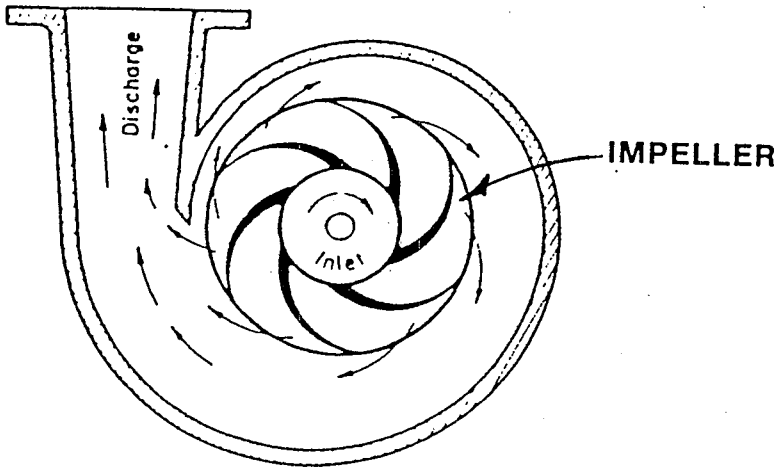


Volute-type, centrifugal pump has no diffuser vanes or guides.

# Volute Type Pump

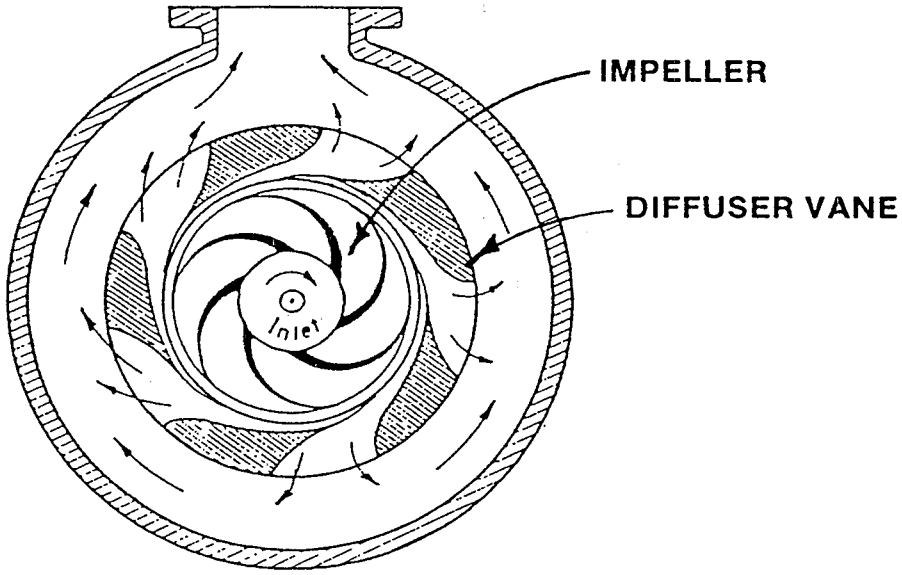


In turbine-type pump, water leaving the impeller moves out through the curved passages between diffuser vanes.

# Turbine Type Pump

# Centrifugal Pumps

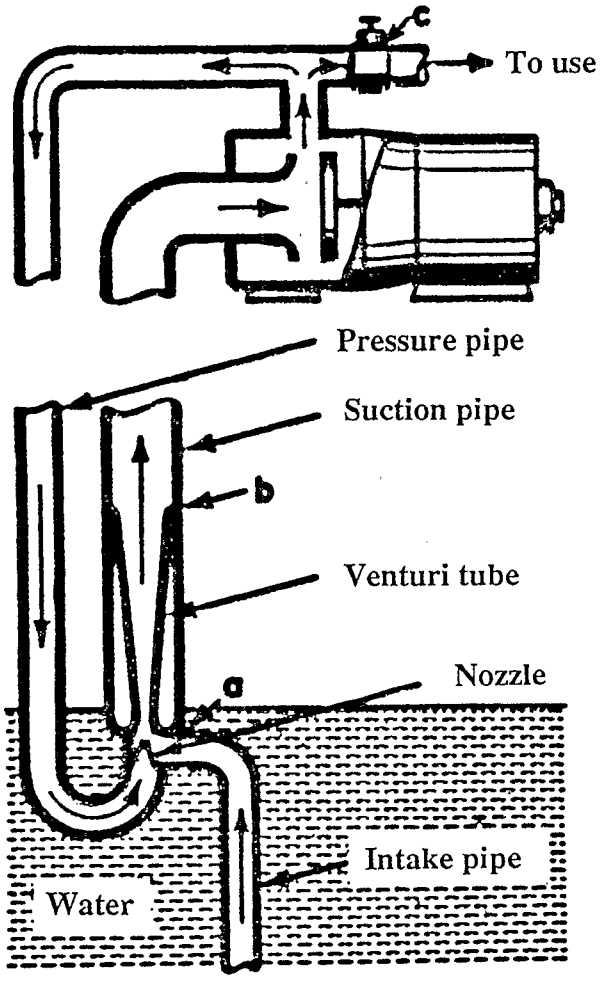


Operating principles

# ROTARY PUMP

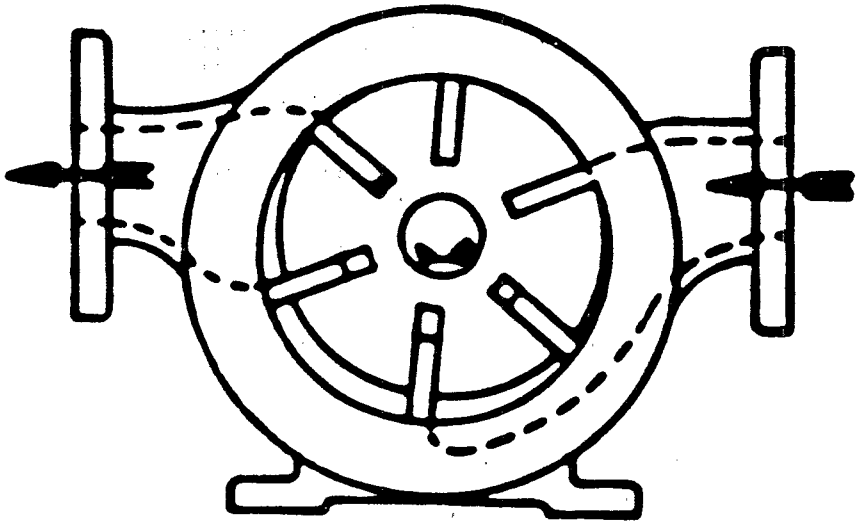

Sliding Vane

# Rotary Pump

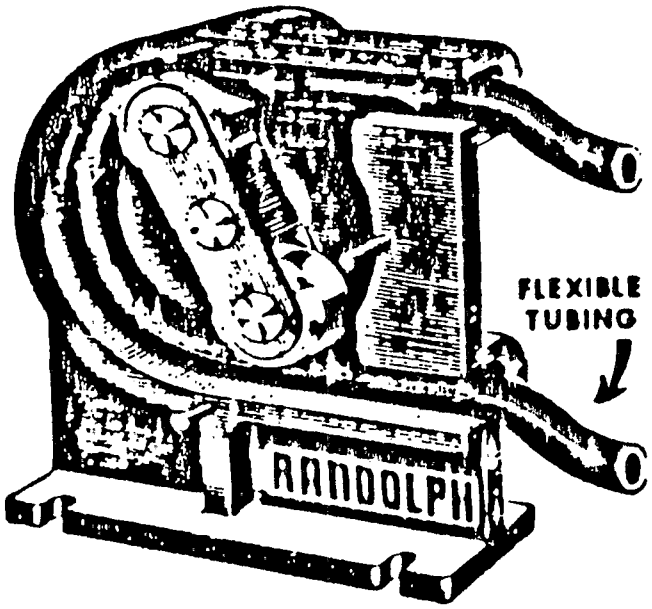

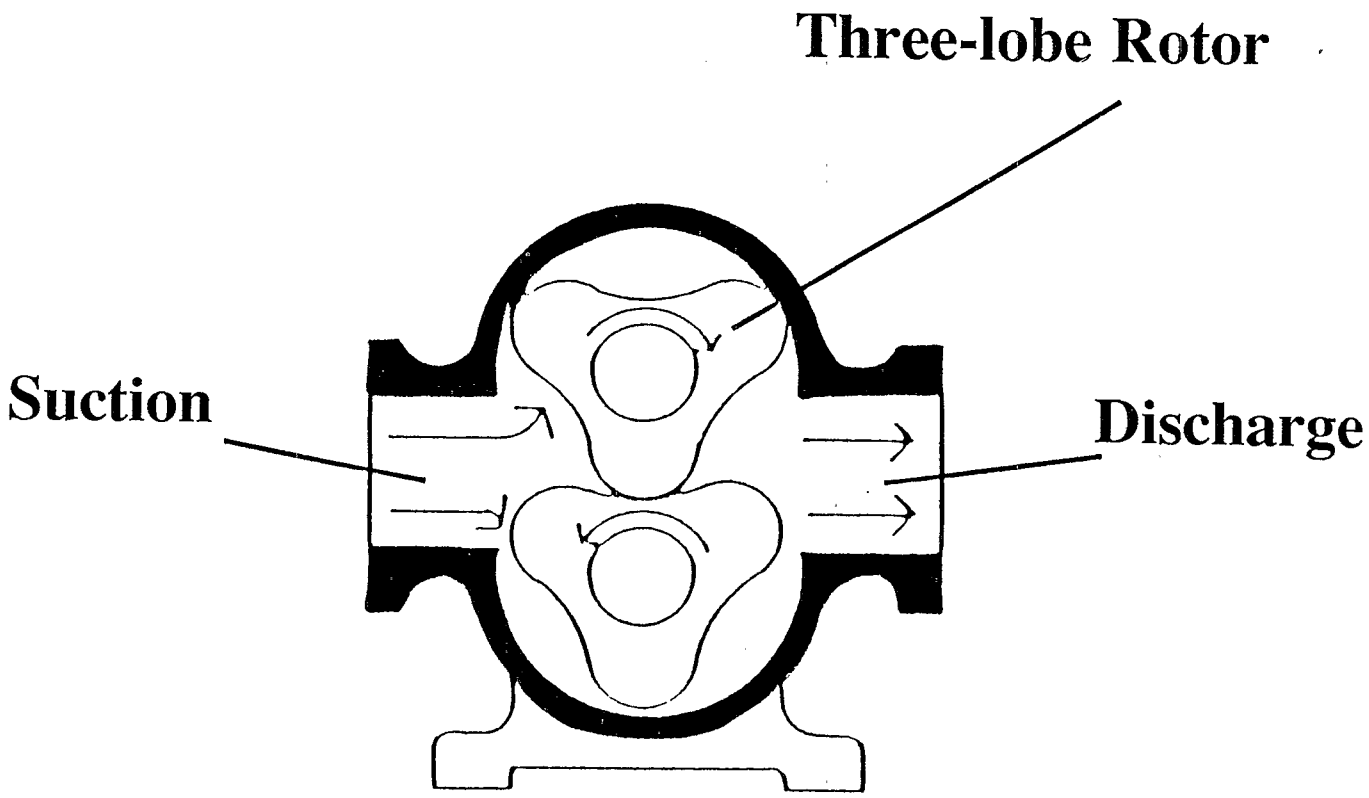
Three-lobe Rotor
Suction
Discharge

# Pumps

## SERIES OPERATION

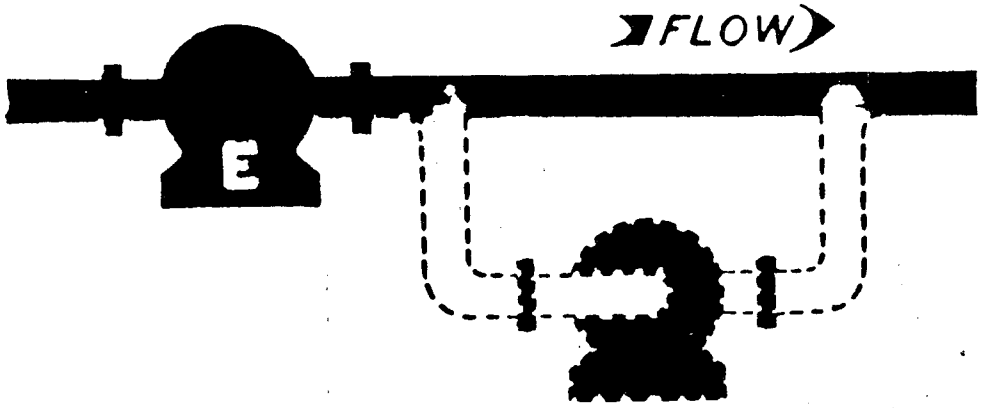


## PARALLEL OPERATION

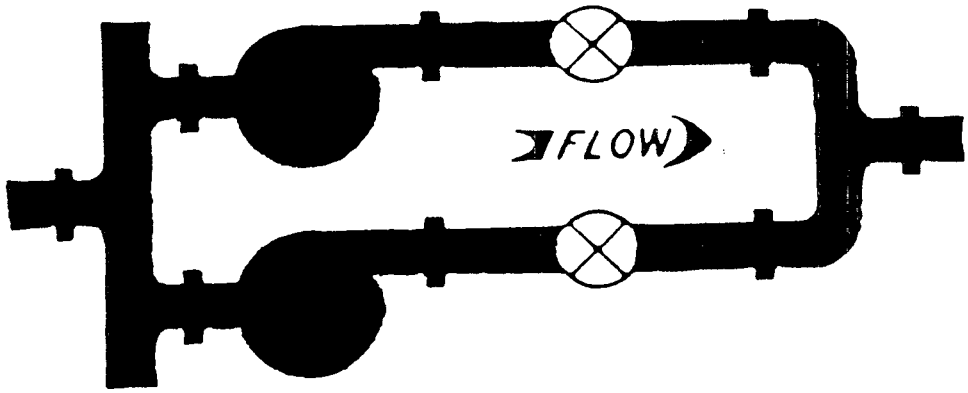

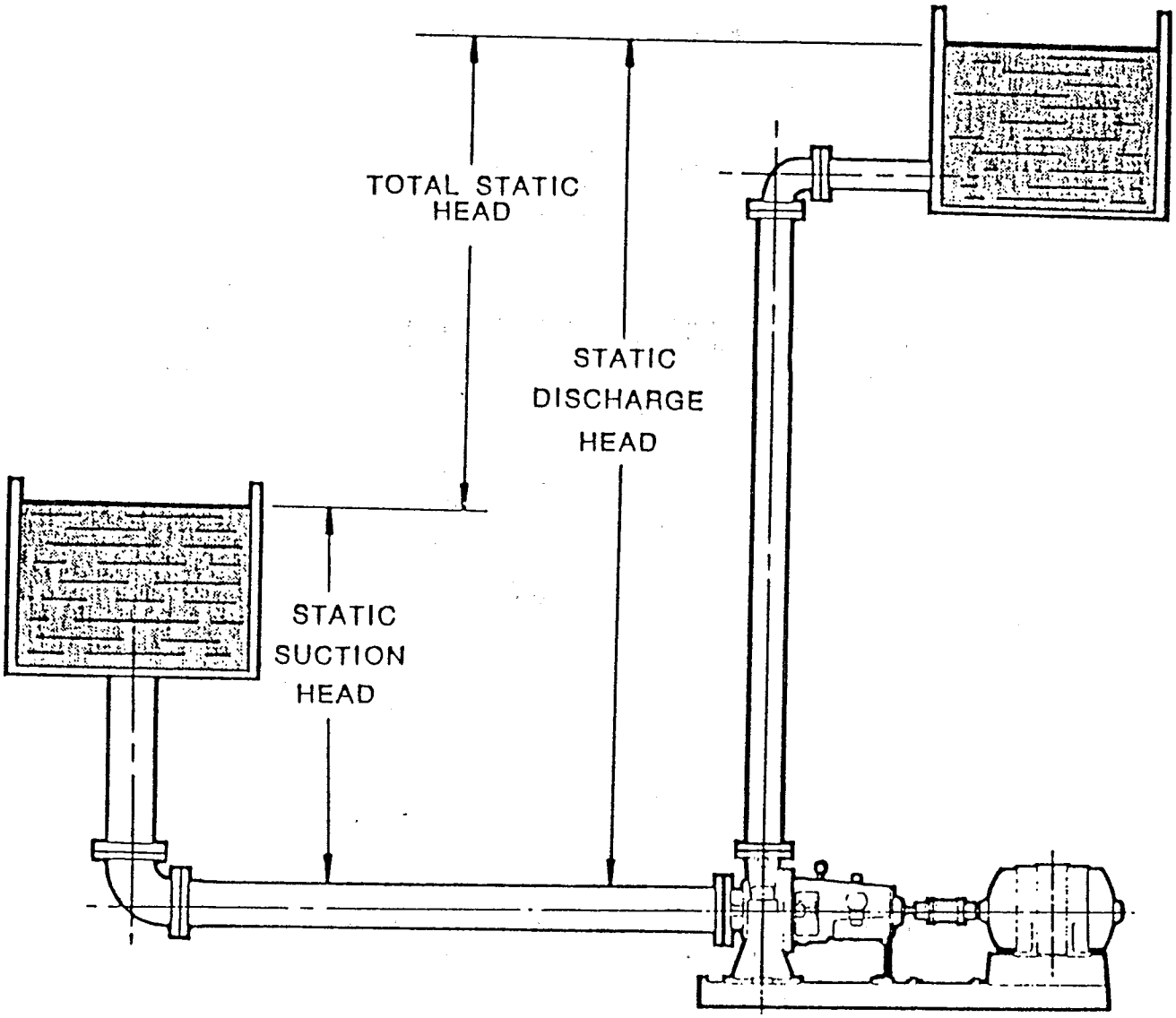


Transparency 3-11

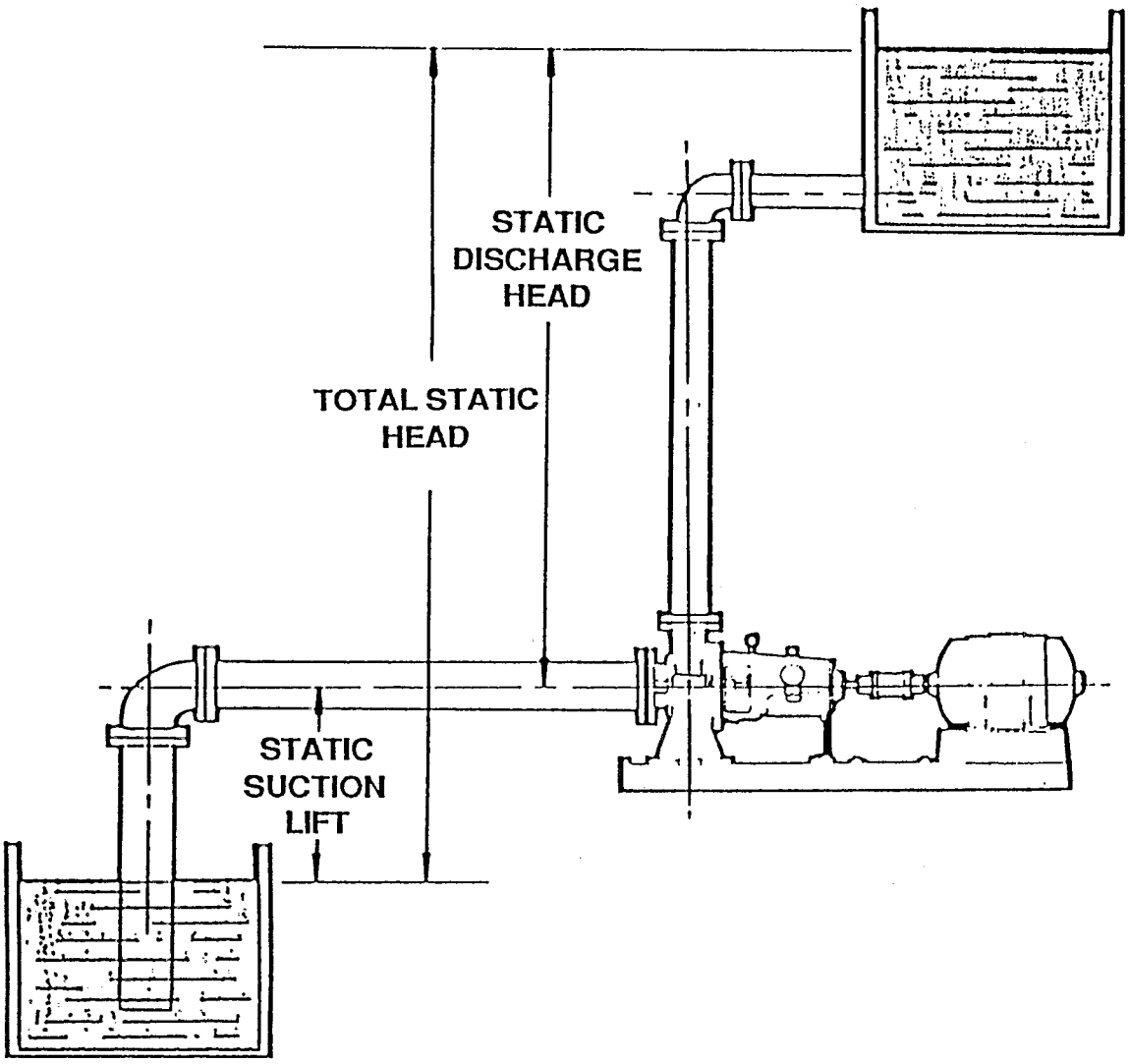


Transparency 3-12

## UNIT 4: WATER TREATMENT - "THE NEED-TO-KNOW"

**Unit Summary**

Treatment Processes
Sanitary Risks

**Unit Objective**

Students will be able to perform a basic inspection of a water treatment plant and identify sanitary risks in the following areas: equipment operation and maintenance, treatment and process control, disinfection, and safety.

**Logistics**

Approximate Presentation Time: 75 minutes

Instructor Materials

- Basic material
- Transparencies 4-1 to 4-17
- Chalkboard

Student Materials

- Reference Manual, Unit 4

Student Preparation

- Unit 4 should be read prior to the session
- Scan Table 4-1

Unit References

- Small Water Systems Serving the Public (Chapters 9 and 10)
- Manual of Instruction for Water Treatment Plant Operators (Chapters 5-15)
- Manual of Water Utility Operations (Chapters 7-11)
- Water Treatment Plant Operations (Volume I, Chapters 4-9 and 11)
- Manual of Treatment Techniques for Meeting the Interim Primary Drinking Water Regulations
- Water Supply System Operation (Chapter 4)

| INSTRUCTOR GUIDELINES | PRESENTATION OUTLINE |
|---|---|
| Use Transparency 4-1. | A. Treatment Process (10 minutes) |
| Use Transparency 4-2 or draw a typical treatment process schematic on the chalkboard. | 1. Pretreatment - generally for removal of taste and odors. |
| Define each of the activities involved in water treatment. | 2. Coagulation/Flocculation - treatment with certain chemicals for collecting non-settable particles into larger or other fine-grained materials to remove particulate matter too light or too finely divided for removal by sedimentation. |
| Indicate on the diagram the activity point and the treatment process(es) involved. | 3. Sedimentation - removal of suspended matter. |
| | 4. Filtration - the process of passing a liquid through a filtering media for removal of suspended or colloidal matter usually of a type that cannot be removed by sedimentation. |
| | 5. Disinfection - destroying pathogenic organisms with chlorine, certain chlorine compounds, or other means. |
| Use questions to promote discussion and present additional information. | a. How can effectiveness of treatment process(es) be determined?<br>b. What records would be helpful in making this determination? |
| State that this section is only to assist the student in identification of sanitary risks. For a detailed discussion of a particular process, they will have to consult other references or programs. | B. Sanitary Risks (65 minutes) |
| Use Transparencies 4-2 and 4-3. | 1. Prechlorination/Pretreatment (10 minutes)<br>a. What chemical is used?<br>b. What amount is used?<br>- Discuss commonly used chemicals/processes for pretreatment.<br>- Chlorine, chlorine dioxide, ozone, potassium permanganate, activated carbon |
| Suggest that students draw a schematic of plants when inspecting. | c. For prechlorination, has the possibility of trihalomethane formation been evaluated?<br>d. What is point of application?<br>- Improper application |
| Briefly point out that application point and amount of chlorine addition can impact on TTHM generated. | e. Is proper mixing achieved?<br>- Short circuiting<br>f. What other pretreatment is provided? |

| INSTRUCTOR GUIDELINES | PRESENTATION OUTLINE |
|---|---|
| Use Transparencies 4-4 and 4-5.<br><br>Explain that this applies to all chemical feed processes, e.g., coagulation, softening, taste and odor control, iron and manganese control, etc.<br><br>Use Transparency 4-6. Use personal experiences and anecdotes to relate course material to actual situations an inspector may encounter during a sanitary survey. | 2. Chemical Feed (10 minutes)<br>a. What chemical is used?<br>b. Where is it applied?<br>- Stress that it will assist inspector to make a schematic diagram of units and chemical addition points.<br>c. What is condition of feed equipment?<br>d. Are instrumentation and controls for the process adequate, operational, and utilized?<br>- The operator's answers to questions about process controls and equipment will give inspector insight into the operator's competency.<br>e. Is chemical storage adequate and safe?<br>f. Are adequate safety devices available and precautions observed (dust mask, safety goggles, gloves, protective clothing)? |
| Use Transparency 4-7.<br><br>Use Transparency 4-8. | 3. Mixing (10 minutes)<br>a. Is mixing adequate based on visual observation?<br>- Problems with short circuiting<br>b. Is equipment operated properly and in good repair? |
| Use Transparencies 4-9 through 4-11. | 4. Flocculation/Sedimentation (5 minutes)<br>a. Is process adequate based on visual observation?<br>1) Good floc formation<br>2) No floc carryover from sedimentation<br>b. Is equipment operated properly and in good repair? |
| Use Transparencies 4-12 through 4-15.<br><br>Point out that inspector may wish to have operator backwash filter.<br><br>Other questions may be required by other types of filters. | 5. Filtration (5 minutes)<br>a. Is process adequate based on observation?<br>b. Are instrumentation and controls for the process adequate, operational, and utilized?<br>1) Rate of flow controllers<br>2) Head loss indicators<br>c. Is equipment operated properly and in good repair?<br>1) Presence of mudballs, cracks<br>2) Backwash<br>3) Possibility of cross-connections |

| INSTRUCTOR GUIDELINES | PRESENTATION OUTLINE |
|---|---|
| Use Transparency 4-16. | 6. Post-Chlorination (20 minutes) |
| Explain that inspector should not only be concerned with sanitary aspects of chlorination but safety as well. | a. Is adequate chlorine residual maintained? Describe types of residual and their importance.<br>1) Combined - slower acting disinfectant<br>2) Free - faster acting<br>3) Breakpoint chlorination |
| Use Transparency 4-17. | b. Is there sufficient contact time (30 minutes minimum) between the chlorination point and the first point of use? |
| Discuss use of coliform bacteria as indicator in sampling. Discuss importance of confluent growth and colonies too numerous to count. | c. Is the disinfection equipment operated and maintained properly?<br>1) Describe importance of contact time.<br>2) Problems with short circuiting. |
| Use personal experience or anecdotes to relate material to actual situations an inspector may encounter during a sanitary survey. | d. Is operational standby equipment provided? If not, are critical spare parts on hand?<br>- Emphasize importance of continuous chlorination. |
| Discuss need to stop flow of water when changing cylinders on a one-cylinder system. | e. Is a manifold provided to allow feeding from more than one cylinder?<br>- Allows continuous chlorination |
| | f. Are scales provided for weighing of containers? |
| | g. Are chlorine storage and use areas isolated from other work areas? |
| Emphasize the importance of a good chlorine safety program. | h. Is room vented to the outdoors by exhaust grilles located not more than 6 inches above floor level?<br>- One complete air change per minute recommended |
| Ask students to explain importance of safety measures. | i. Are all doors hinged outward, equipped with panic bars, and at least one provided with a viewport? |
| | j. Is self-contained breathing apparatus available for use during repair of leaks? |
| | k. Is a means of leak detection provided?<br>- Use of dilute ammonium hydroxide or chlorine detection devices |
| | l. Are all gas cylinders restrained by chaining to wall or by other means? |

| INSTRUCTOR GUIDELINES | PRESENTATION OUTLINE |
|---|---|
| Explain that Table 4-1 is a brief overview of treatment techniques to remove contaminants having MCLS and other common water quality problems. | 7. Other Treatment (5 minutes or more depending on instructor's discretion) The instructor should discuss other treatment processes present in the area, such as:<br>a. Ozone disinfection<br>b. Ultraviolet light disinfection<br>c. Ion exchange<br>d. Chloramine disinfection<br>e. Chlorine dioxide disinfection<br>f. Carbon absorption<br>g. Iodine disinfection<br>h. Reverse osmosis |

# Water Treatment

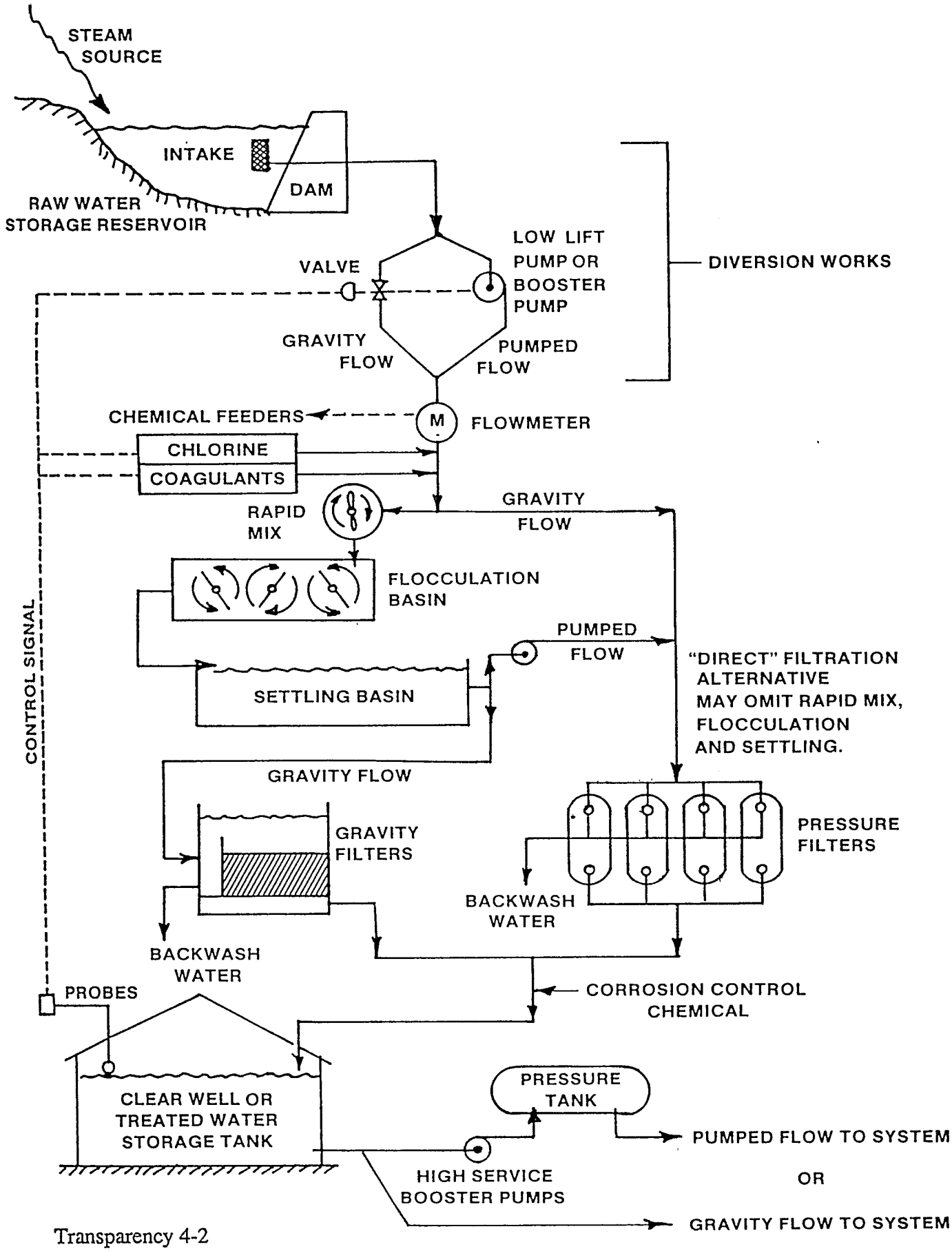


Transparency 4-2

Flow Schematic

# Common Pretreatment Chemicals

- Chlorine
- Chlorine Dioxide
- Ozone
- Potassium Permanganate
- Activated Carbon

# Chemical Feed

# Need For Chemicals

1. Clarification
   (Turbidity reduction)
2. Disinfection,
3. Taste and odor control,
4. Algae control,
5. Corrosion/scaling control,
6. Water softening, and
7. Fluoridation.

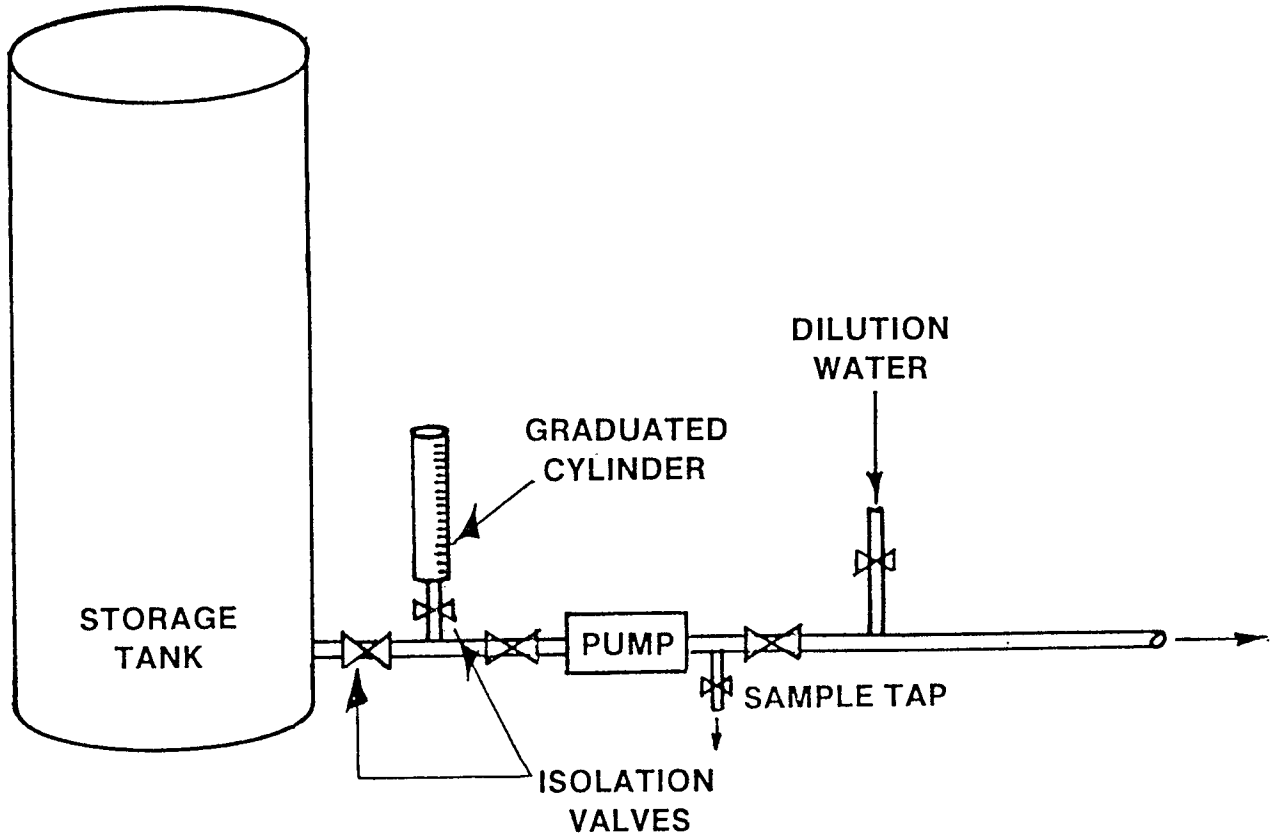


# CALIBRATION SYSTEM

# MIXING

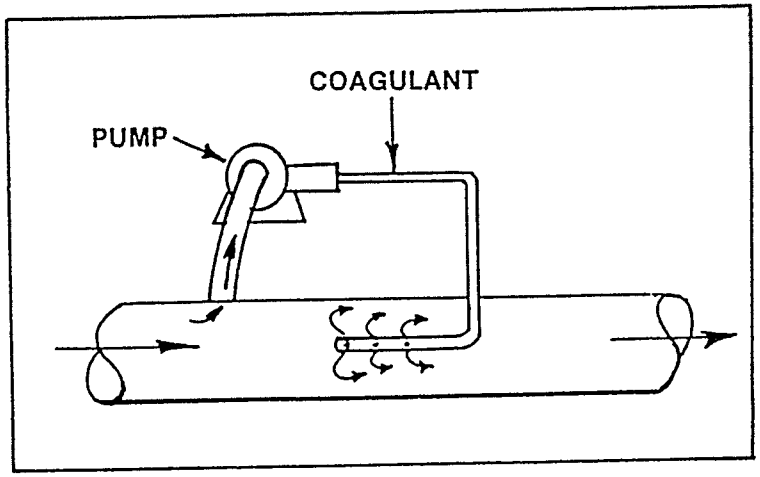


PUMPED BLENDER
(SEE FIGURE 4.3)

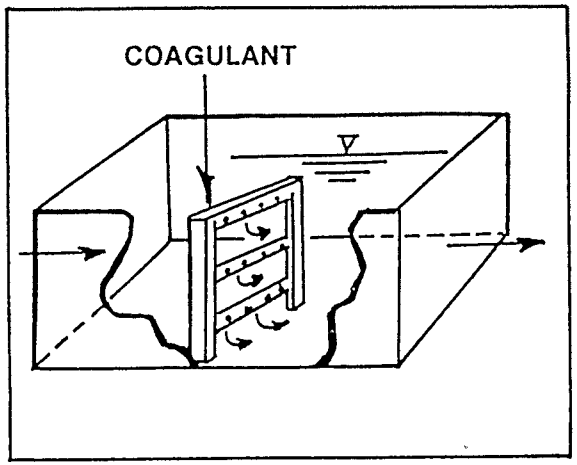


DIFFUSER

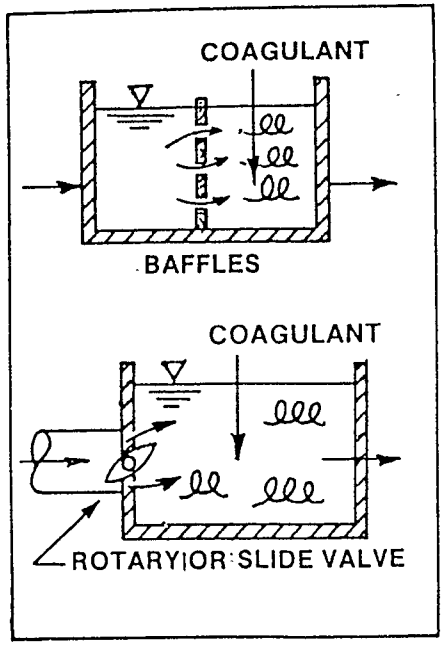


HYDRAULIC
( ℓℓℓ – DENOTES TURBULENCE)

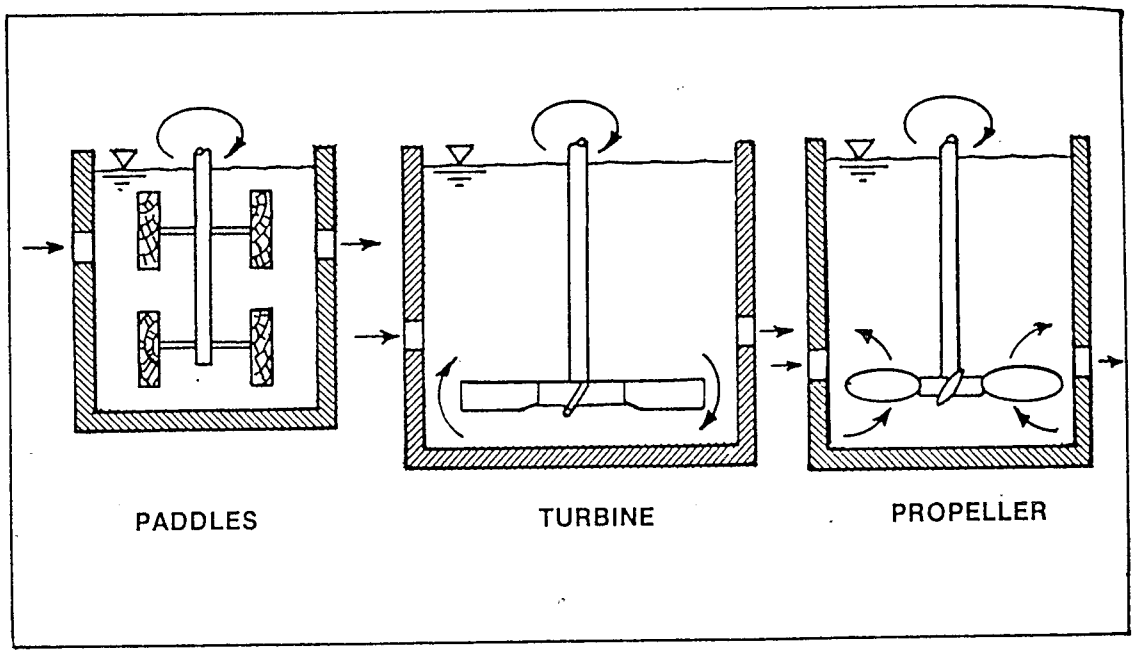


MECHANICAL MIXERS
(INSTALLED IN MIXING BASINS)

Mixing Techniques

Transparency 4-8

# FLOCCULATION/ SEDIMENTATION

# FLOCCULATION

**Efficient performance requires proper:**

1. stirring time
2. stirring intensity
3. shaped basin
4. mechanical equipment

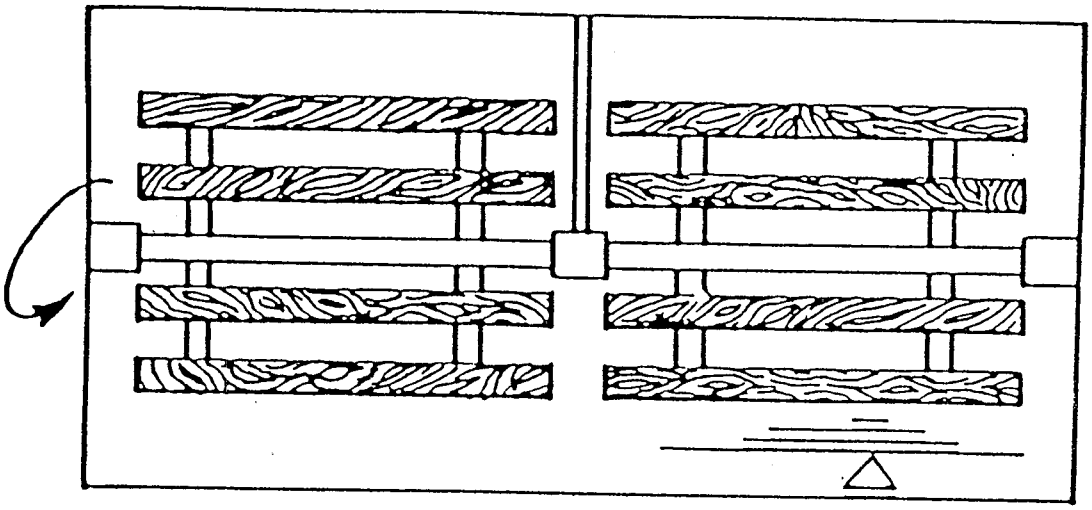

Horizontal Paddle Wheel

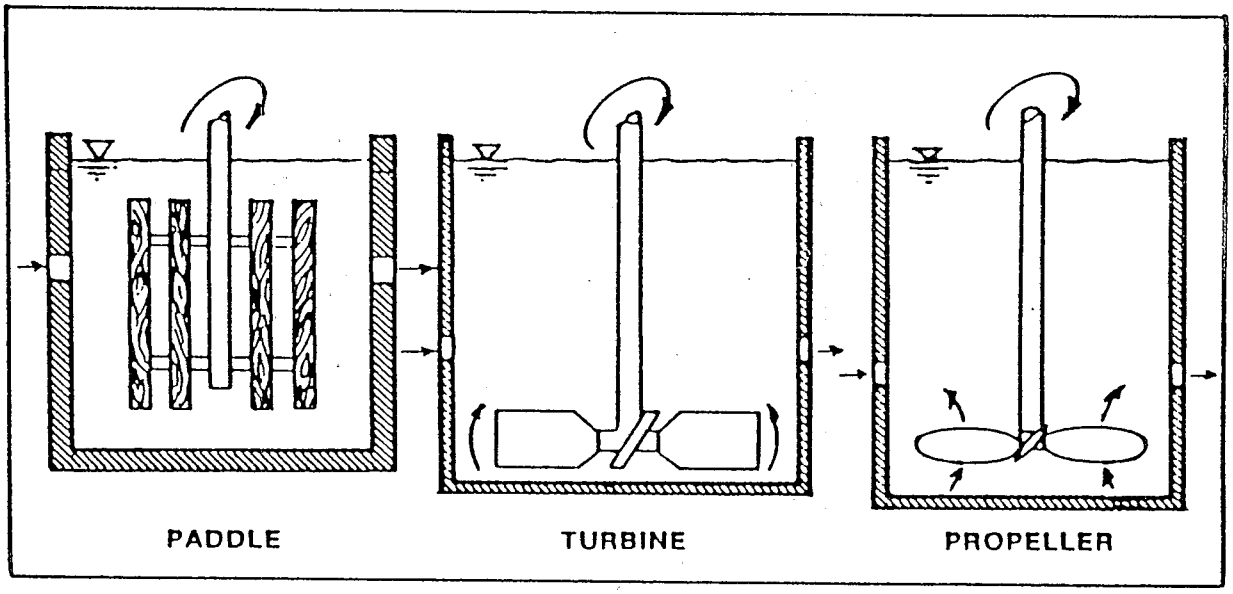


Vertical Flocculators (Installed in Flocculation Basins)

# Types of mechanical flocculators

# FILTRATION

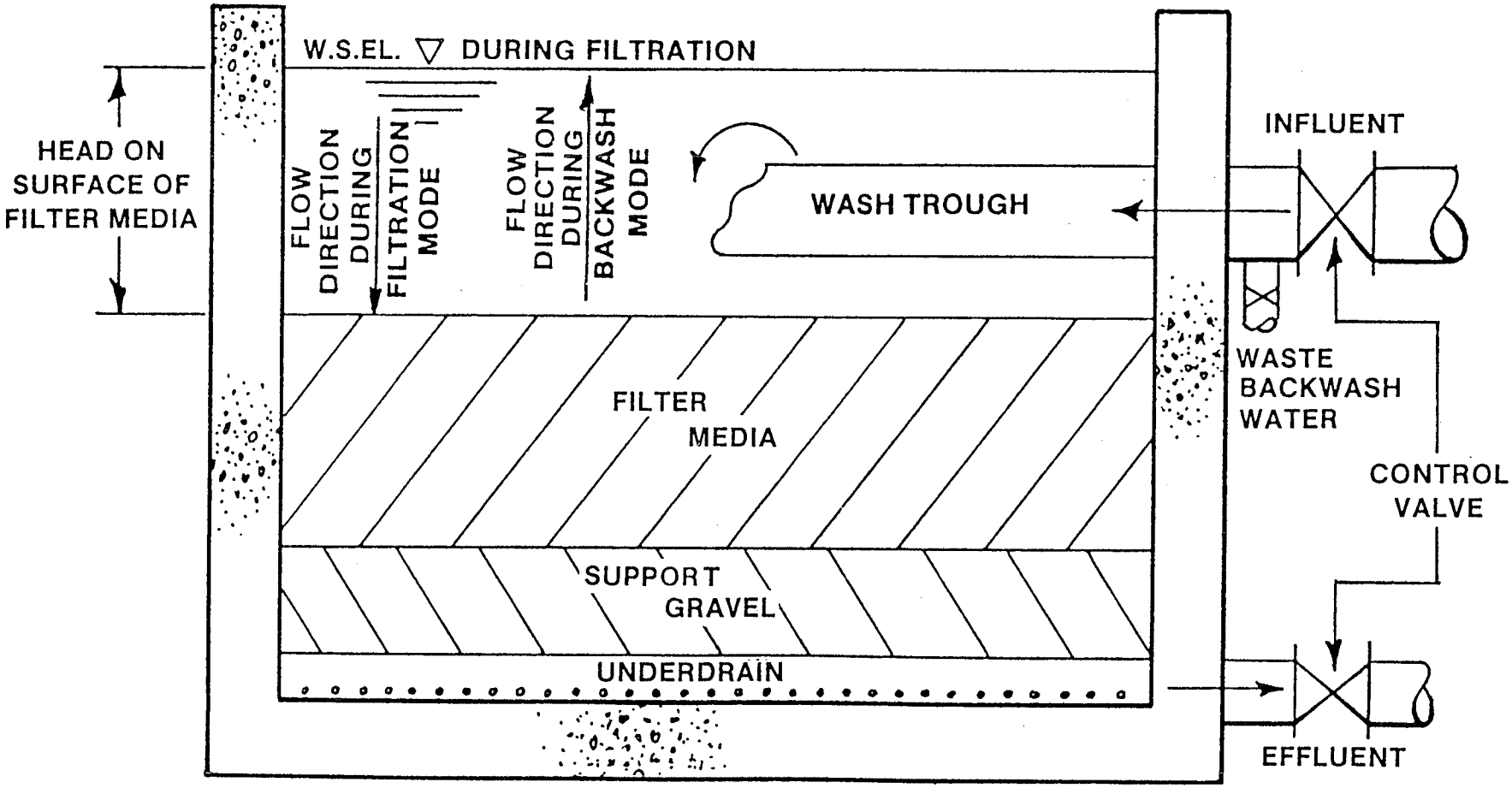


GRAVITY FILTER MODULE

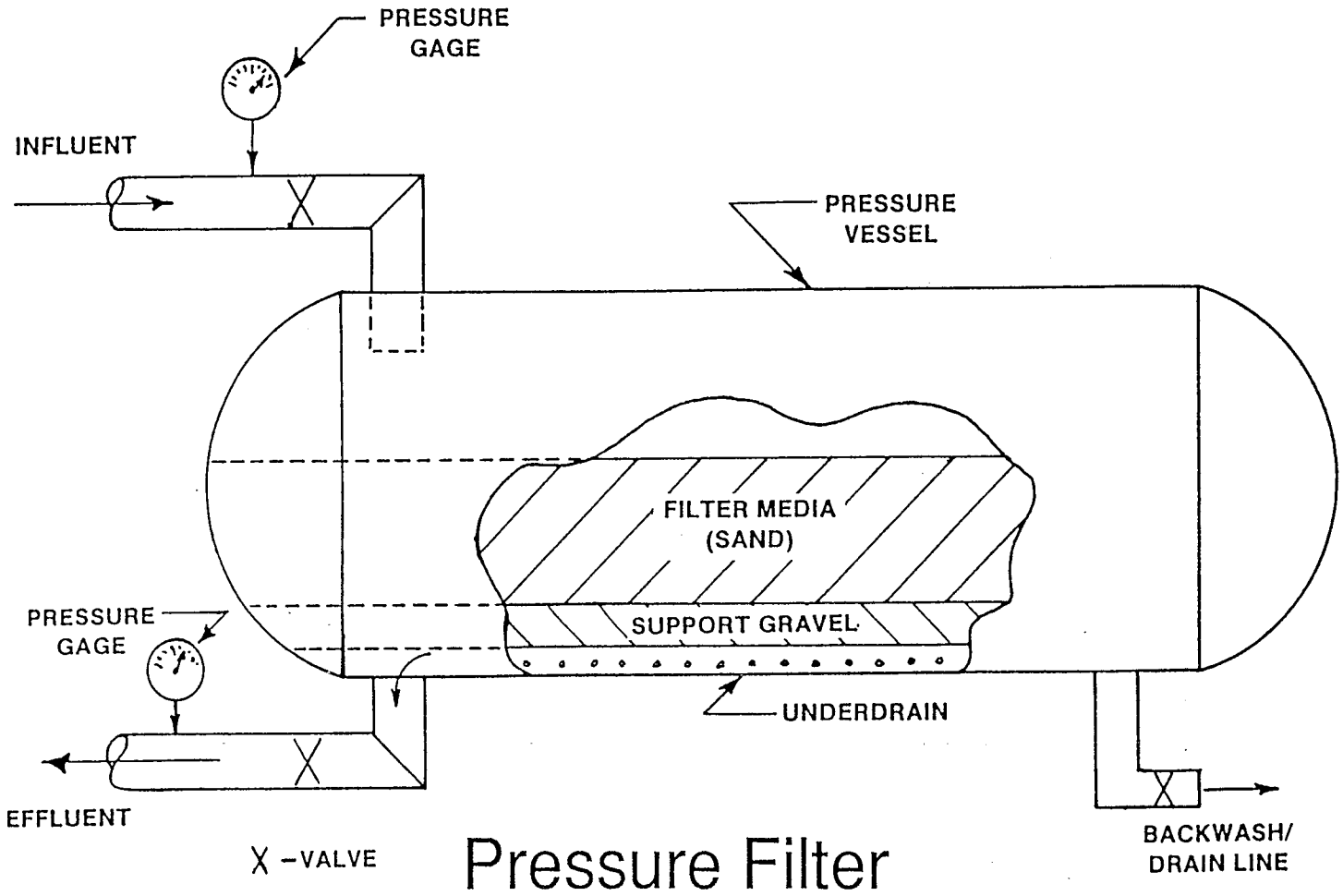


# Pressure Filter

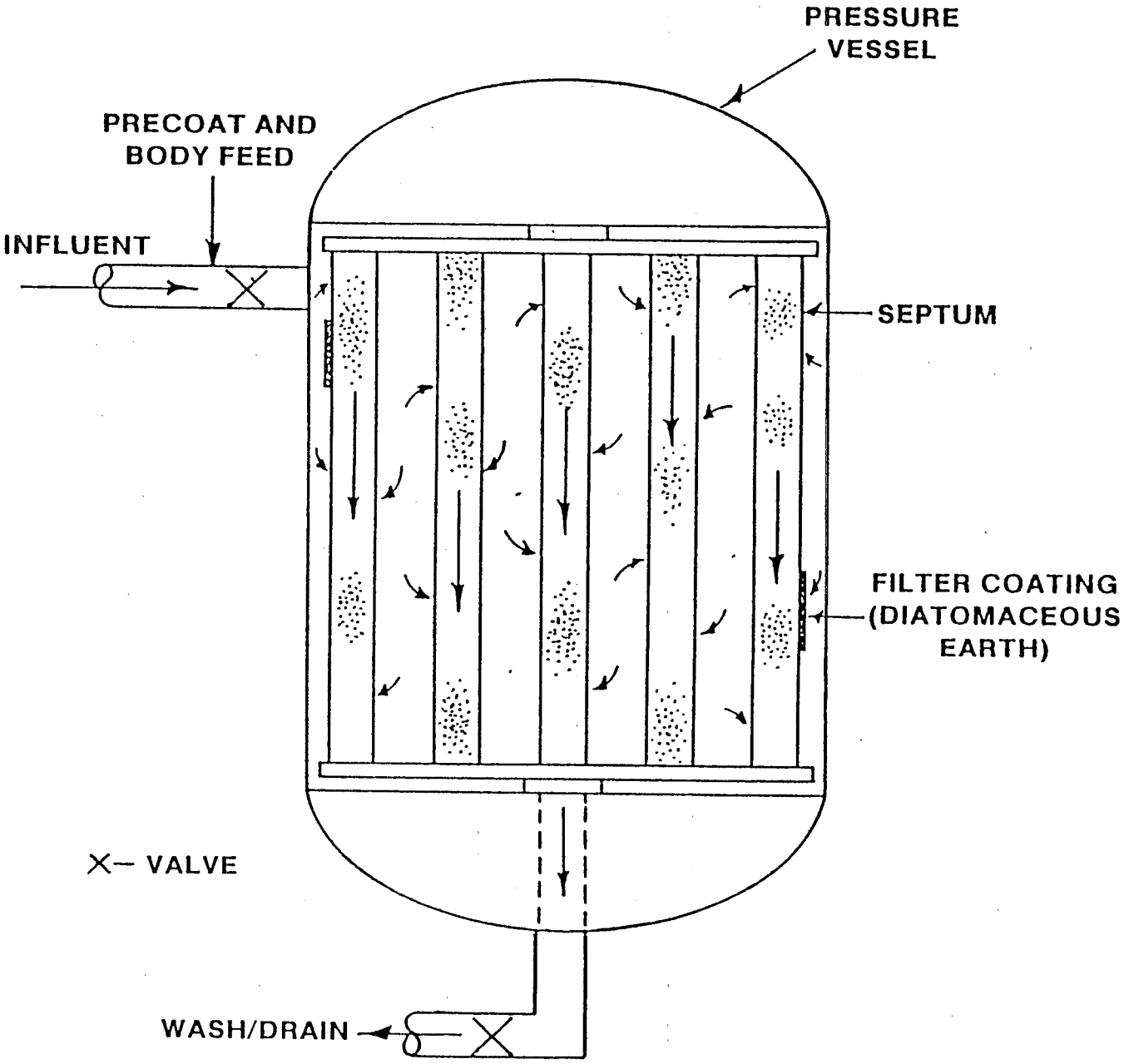


PRECOAT FILTER

# Post-Chlorination

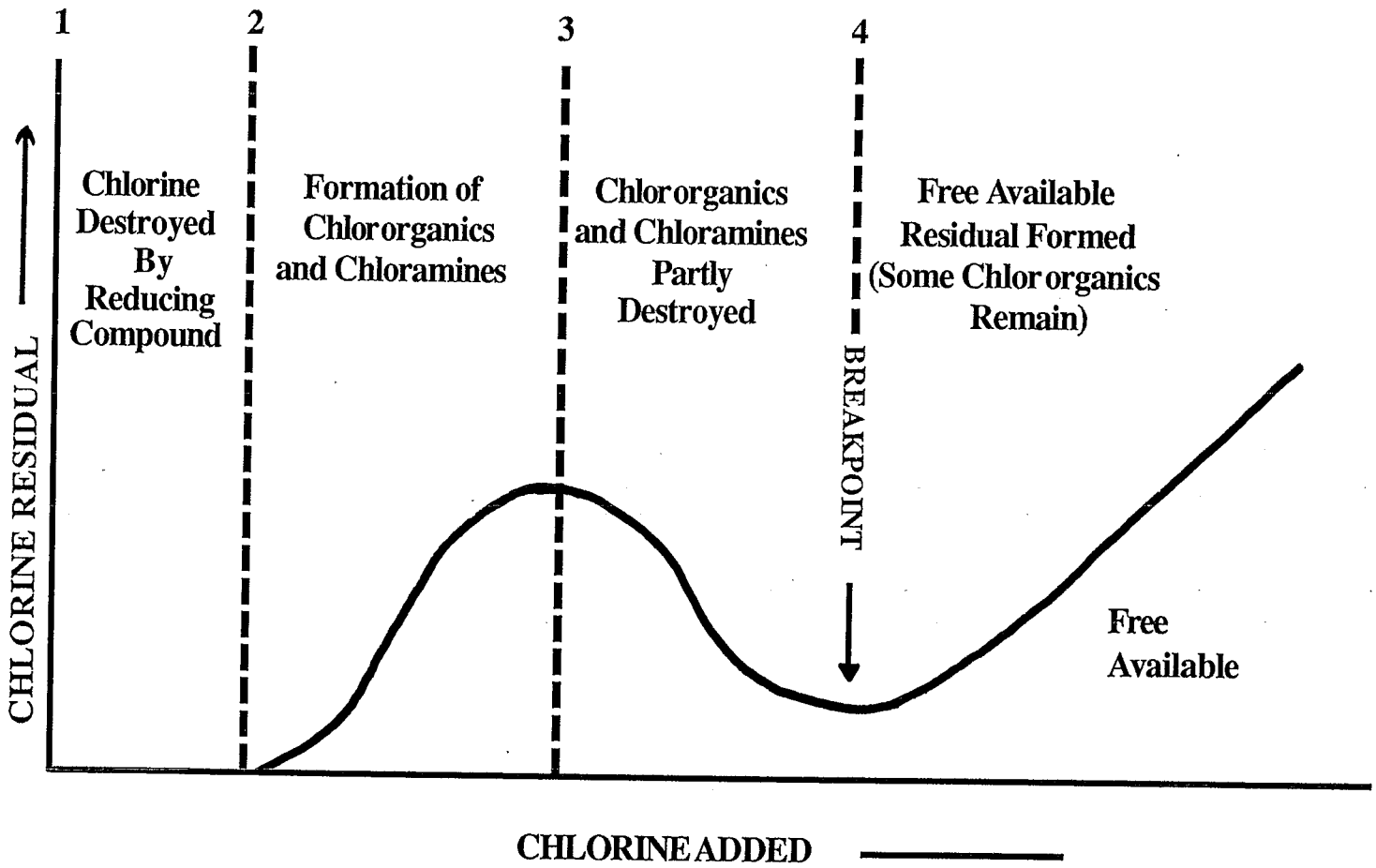


# BREAKPOINT CHLORINATION CURVE

Transparency 4-17

## UNIT 5: STORAGE - "THE NEED-TO-KNOW"

### Unit Summary

Gravity Storage
Hydropneumatic Storage

### Unit Contents

5a: Gravity Storage
- Characteristics
- Sanitary Risks

5b: Hydropneumatic Storage
- Characteristics
- Sanitary Risks

## UNIT 5a: Gravity Storage - "The Need-to-Know"

**Unit Summary**

Characteristics of a Gravity Storage System
Sanitary Risks

**Unit Objectives**

Students will be able to evaluate sanitary risks of a gravity storage system with a minimum of 80% accuracy.

**Logistics**

Approximate Presentation Time: 45 minutes

Instructor Materials

- Basic material
- Transparencies 5a-1 to 5a-3
- Chalkboard
- Overhead projector and screen

Student Materials

- Reference Manual, Unit 5a

Student Preparation

- Read Unit 5a prior to the session

Unit References

- Small Water System Serving the Public (Chapter 6)
- Manual of Individual Water Supply Systems (Part V)
- Water Supply System Operation (Chapter 5)

Basic Material

| INSTRUCTOR GUIDELINES | PRESENTATION OUTLINE |
|---|---|
| Use Transparencies 5a-1 and 5a-2. | A. General (10 minutes) |
| Identify on chalkboard diagram of the various components. Explain their functions. | B. Components<br>1. Supply (generally a well)<br>2. Inlet<br>3. Reservoir<br>a. Elevated<br>b. Surface (on ground)<br>c. In ground<br>4. Outlet<br>5. Pumps (if applicable) |
| Use personal experiences and anecdotes to relate material to actual situations an inspector may encounter during a sanitary survey.<br><br>Point out importance of information requested by each question. | C. Sanitary Risks (30 minutes)<br>1. Does surface runoff and underground drainage flow away from the storage structure?<br>2. Is the site protected against flooding?<br>- Provides protection against contamination by nonpotable water.<br>3. Is storage tank structurally sound?<br>4. Are overflow lines, air vents, drainage lines, or cleanout pipes turned downward or covered, screened and terminated a minimum of 3 diameters above the ground or storage tank surface?<br>- Protection against birds, dust, and nonpotable runoff |
| Use Transparency 5a-2. | 5. Is site adequately protected against vandalism?<br>a. Fenced<br>b. Hatches locked<br>c. Ladders cut off 10 feet above ground<br>6. Are surface coatings in contact with water approved?<br>- Unauthorized surface coatings can degrade water quality through organic and inorganic contaminants<br>7. Is tank protected against corrosion?<br>- Corrosion<br>a. Oxygen and water, in contact with steel<br>b. Esthetic problems<br>c. Heavy metal solubility<br>d. Protection:<br>1) Rust prevention barrier (paint, cement, other coatings)<br>2) Carbonate film coating<br>3) Cathodic (sacrificial anode)<br>8. Can tank be isolated from system?<br>- Emphasize importance of being able to take tank out of system without shutting down entire system. |

| INSTRUCTOR GUIDELINES | PRESENTATION OUTLINE |
|---|---|
| | 9. Is all treated water storage covered?<br>10. What is cleaning frequency for tanks?<br>- Sludge<br>1) Buildup of organic, inorganic debris<br>2) Contributes to turbidity, esthetic problems<br>3) Protection<br>4) Periodic draining, cleaning<br>11. Are tanks disinfected after repairs are made?<br>a) Following entry for service, repair<br>b) Protection<br>1) Procedures to disinfect system<br>2) Records of procedures, effectiveness |
| Use Transparency 5a-3. | D. Cistern<br>1. Is cistern properly constructed?<br>2. Is cistern adequately protected?<br>a. Is the overflow line turned down and screened?<br>b. Is the drain screened?<br>c. Is there a first flush, filter or roof washer in place? |

# Gravity Storage

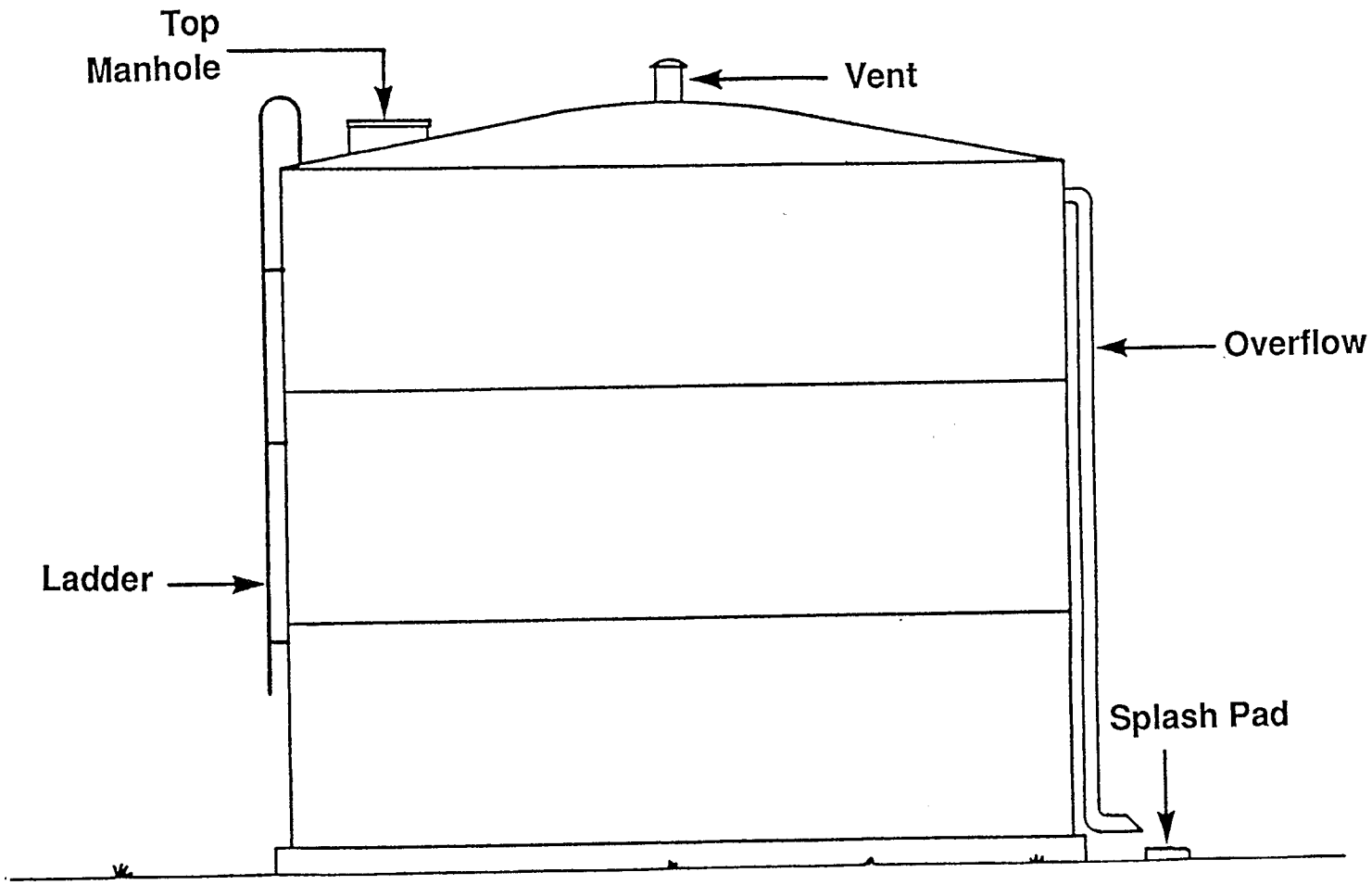


Gravity Storage Tank

Transparency 5a-2

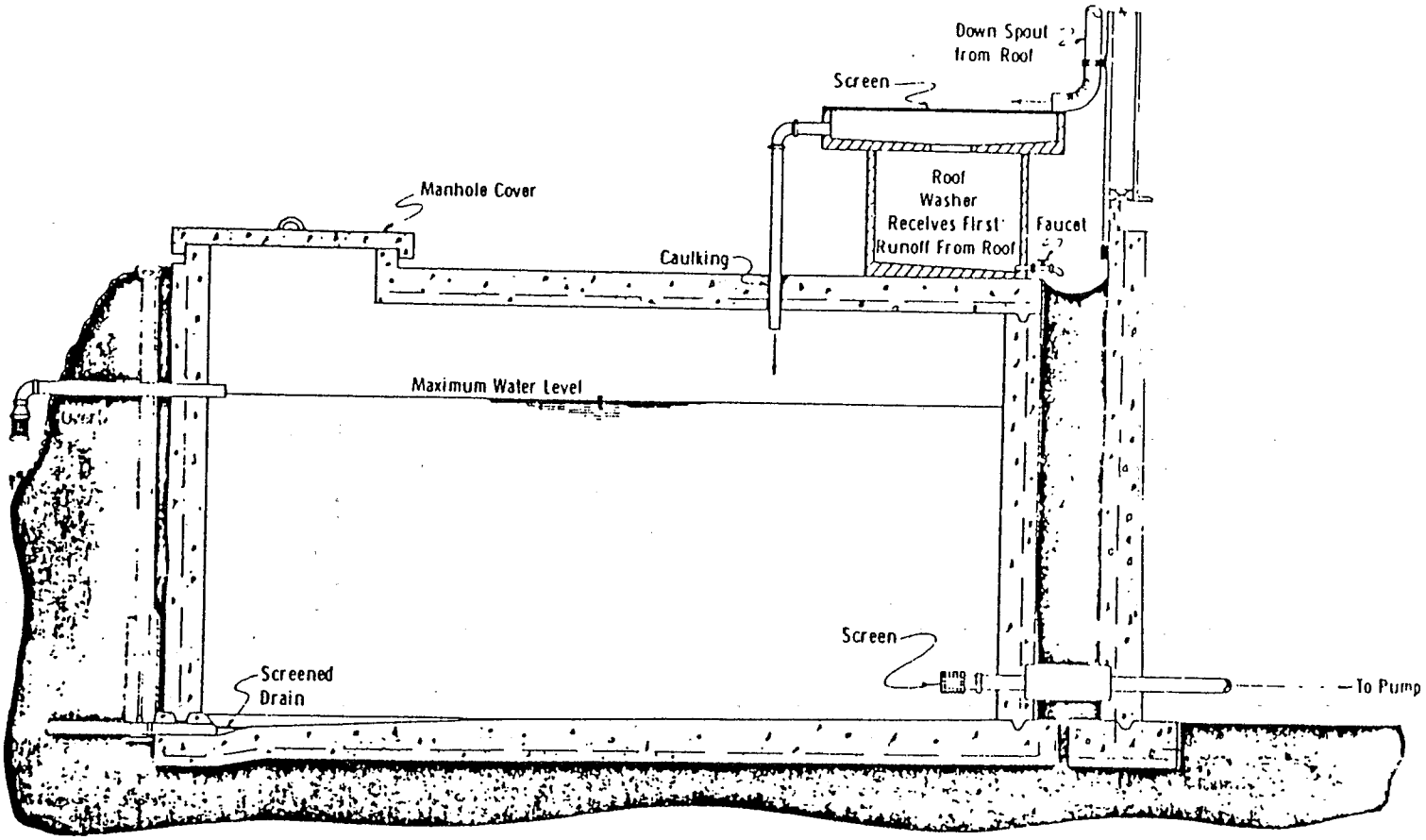


# Cistern

Transparency 5a-3

## UNIT 5b: Hydropneumatic Tanks - "The Need-to-Know"

**Unit Summary**

Types and Characteristics
Sanitary Risks

**Unit Objectives**

Students will be able to evaluate sanitary risks of a hydropneumatic tank storage system with a minimum of 80% accuracy.

**Logistics**

Approximate Presentation Time: 30 minutes

Instructor Materials

- Basic material
- Transparencies 5b-4 through 5b-8
- Overhead projector and screen
- Chalkboard

Student Materials

- Reference Manual, Unit 5b

Student Preparation

- Read Unit 5b prior to the session

Unit References

- Small Water Systems Serving the Public (Chapter 6)
- Manual of Individual Water Supply Systems (Part V)
- Planning for an Individual Water System (Part V)
- Water Supply System Operation (Chapters 3 & 5)

| INSTRUCTOR GUIDELINES | PRESENTATION OUTLINE |
|---|---|
| Use Transparencies 5b-4, 5b-5 and 5b-6. | A. Types and Characteristics (10 minutes) |
| Explain principle of system. | 1. Principle: Air pocket at top; pump's energy pushes air down, water out; cycle repeats when energy dissipates |
| Locate on the transparency the various system components. Ask students to describe the functions. | 2. Components<br>a. Steel tank<br>1) Conventional (air and water in contact)<br>2) Floating wafer (wafer separates air and water)<br>3) Flexible separator (diaphragm or bag separates air and water) |
| Use Transparency 5b-7 to show various types of system tanks. | b. Air volume control<br>c. Relief valve<br>d. Inlet piping<br>e. Pressure gauges<br>f. Motor controls<br>g. High-low water level controls<br>h. Low pressure/flow controls<br>i. Discharge piping<br>j. Air compressor and controls<br>k. Pump |
| List terms on chalkboard. Ask students to define them. Explain as necessary. | 3. Terms<br>a. Cycle rate - frequency of pump start and stop per hour<br>b. Cut-in pressure - predetermined low pressure level in system at which pump is activated<br>c. Cut-out pressure - predetermined pressure level in system at which pump shuts off |
| Use questions to guide class discussion. | 4. Questions<br>a. What advantages/disadvantages do the various types of tanks offer?<br>b. Explain why hydropneumatic systems have less usable storage than gravity systems.<br>c. What might this mean in terms of sanitary protection? |
| | B. Sanitary and Other Risks (15 minutes) |
| | 1. Does low pressure level provide adequate pressure?<br>- Backflow/backsiphonage potential |
| Explain purpose of controls and what to look for. | 2. Are instruments and controls adequate, operational, and utilized?<br>a. Water level sight glass<br>b. Pressure gauges<br>c. Water level controls |

| INSTRUCTOR GUIDELINES | PRESENTATION OUTLINE |
|---|---|
| Explain importance of each question and its rationale. | 3. Are the interior and exterior surfaces of the pressure tank in good physical condition?<br>- Hazards of improperly maintained tank; e.g., at 50 psi a tank had 3.5 tons of pressure per square foot.<br>DO NOT TAP TANKS WITH METAL OBJECTS.<br>4. Tank supports should be structurally sound.<br>- Structurally sound and properly positioned |
| Use Transparency 5b-8. | 5. Is storage capacity adequate? |
| Explain how to estimate if storage capacity is adequate. Explain formula. | C. Storage Capacity Assessment<br>1. Formula for estimating appropriate tank size:<br>$Q = \frac{Qm}{1-(P_1/P_2)}$<br>Q = Tank volume in gallons<br>Qm = Peak demand rate gpm x desired minutes of storage<br>$P_1$ = Cut-in pressure + atmospheric pressure (14.7 psi)<br>$P_2$ = Cut-out pressure + atmospheric pressure (14.7 psi) |
| | 2. Data sources<br>a. Operating records to determine peak demand and supply rates<br>b. Engineering records to determine system design pressures, capacity |
| Work problem on chalkboard. Use other examples. Ask one or two students to work problem on chalkboard for class. | What would be the minimum tank size needed to meet a peak demand of 30 gpm for 5 minutes and gauge pressures of 40-60 psi? |
| Describe a waterlogged tank. | 3. What is the cycle rate?<br>- Indicator of waterlogged tank |

# Hydropneumatic Tanks

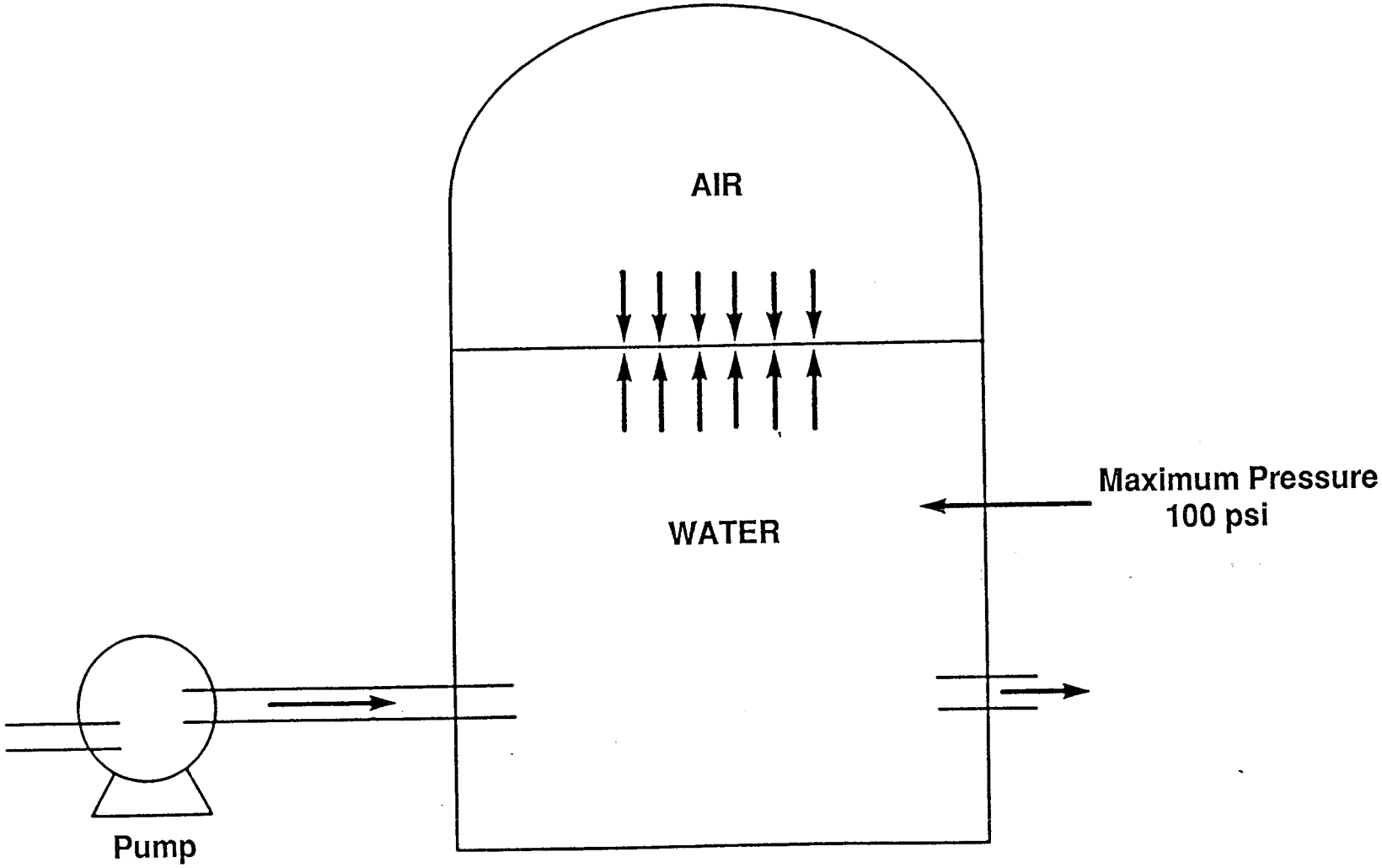


CUT-OUT PRESSURE

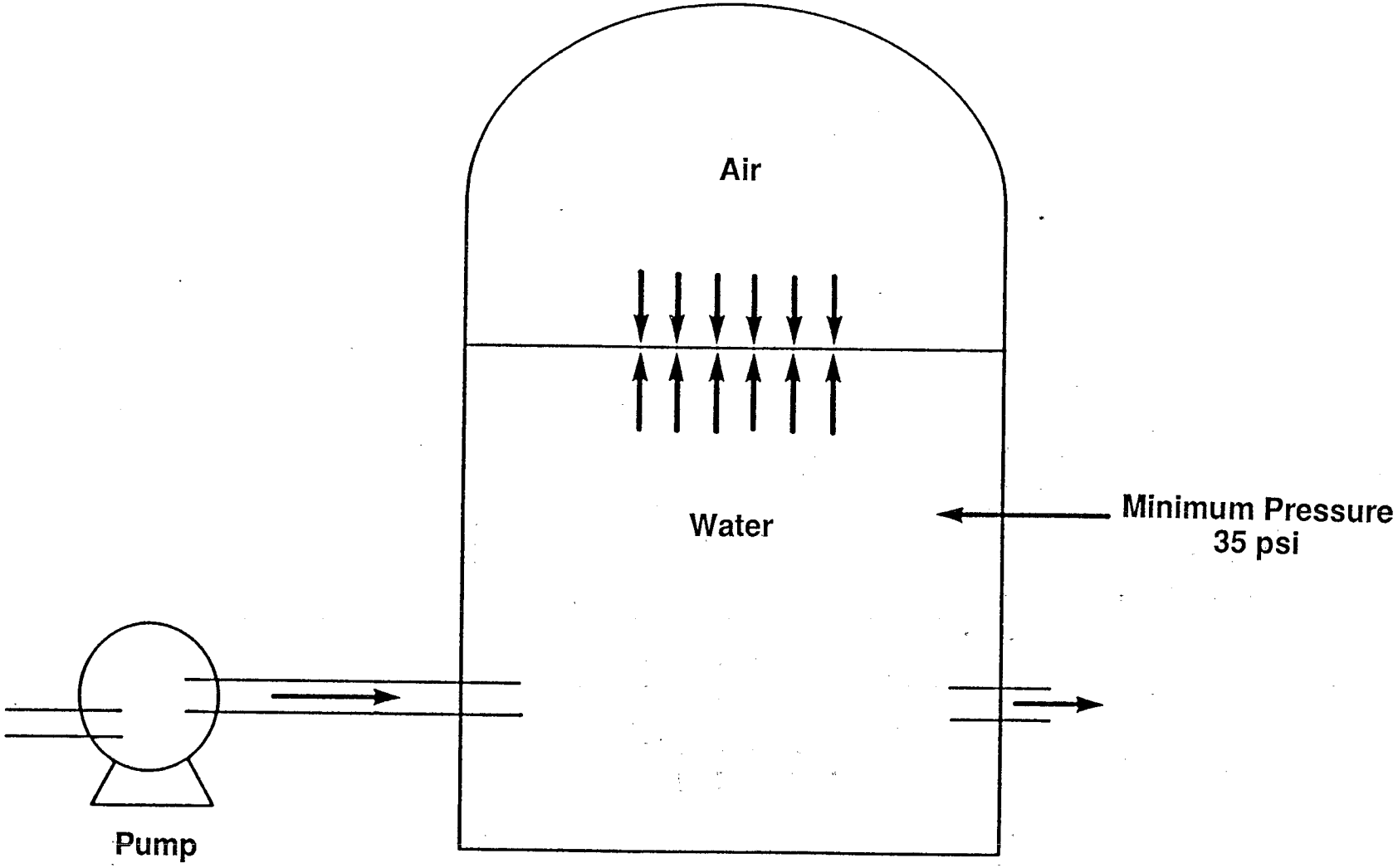


CUT-IN PRESSURE

# Types of Pressure Tanks

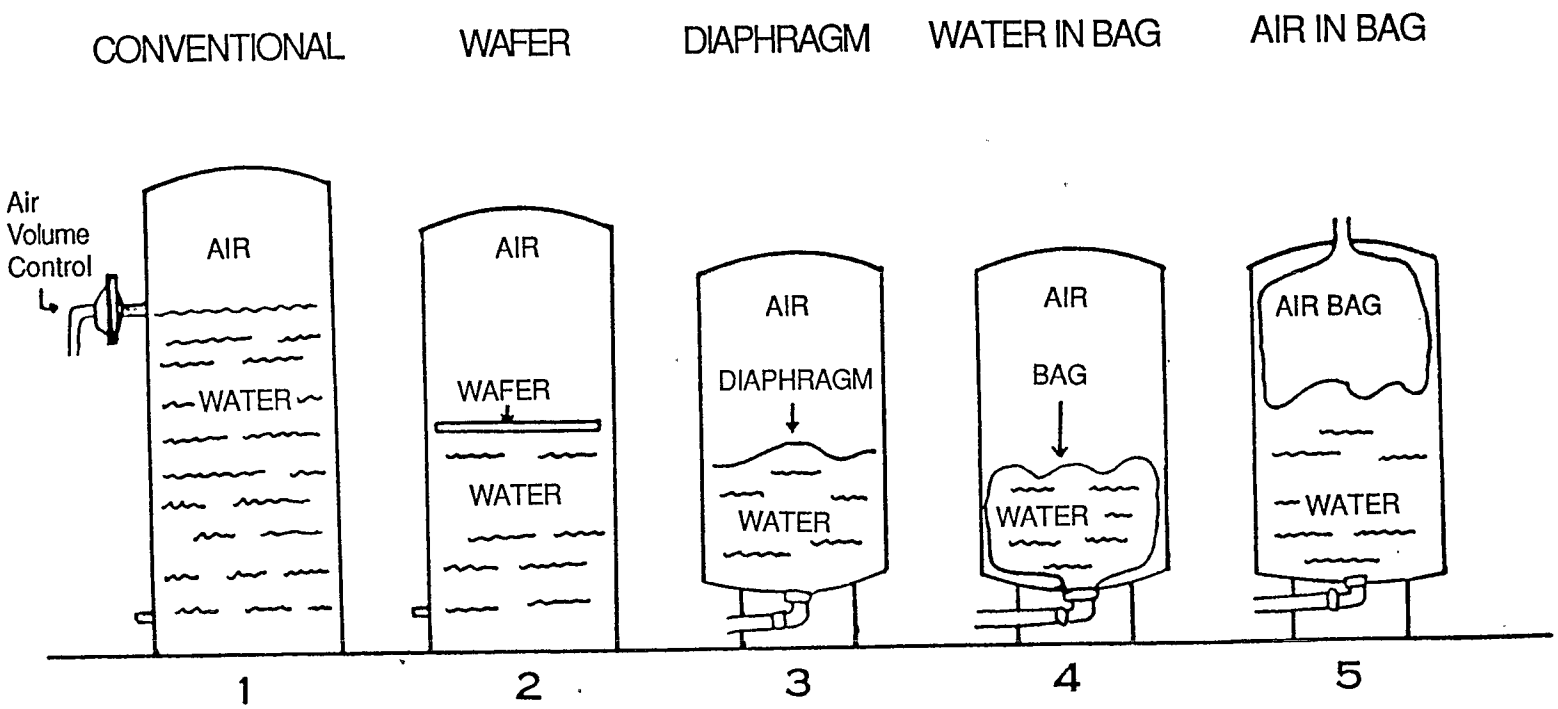

$$Q = \frac{Qm}{1 - \left( {}^{P_1}/_{P_2} \right)}$$

## UNIT 6: WATER DISTRIBUTION - "THE NEED-TO-KNOW"

### Unit Summary

Components of a Distribution System
Sanitary Risks

Types of Cross-Connections
Sanitary Risks

### Unit Contents

6a: Distribution Systems

- Components
- Sanitary Risks

6b: Cross-Connections

- Types and Characteristics
- Sanitary Risks
- Control Techniques and Devices

## UNIT 6a: Distribution Systems - "The Need-to-Know"

**Unit Summary**

Components of a Distribution System
Sanitary Risks

**Unit Objectives**

Students will be able to evaluate the sanitary risks in a water distribution system with a minimum of 80% accuracy.

**Logistics**

Approximate Presentation Time: 45 minutes

Instructor Materials

- Basic material
- Transparencies 6a-1 through 6a-3
- Overhead projector and screen
- Chalkboard

Instructor Preparation

- During this presentation, the instructor will be asked to draw on the chalkboard a simple diagram of a typical distribution system. A rough sketch of this diagram should be prepared in advance.

Student Materials

- Reference Manual, Unit 6a

Student Preparation

- Read Unit 6a prior to the session

Unit References

- Small Water System Serving the Public (Chapter 11)
- Manual of Individual Water Supply Systems (Part V)
- Manual for Evaluating Public Drinking Water Supplies (Part III)
- Water Supply System Operation (Chapters 6 through 8)

| INSTRUCTOR GUIDELINES | PRESENTATION OUTLINE |
|---|---|
| Use Transparency 6a-1. | A. Components of a Distribution System (15 minutes) |
| Explain types and function of pipes. Briefly discuss concept of pressure head loss relative to pipe sizing. | 1. Pipes<br>a. Convey supply to points of use<br>b. Pipe size relative to flow gpm, distance<br>c. Types: |
| Use Transparency 6b-2. | 1) Galvanized. Not recommended for underground use; subject to corrosion from soil, acid water<br>2) Copper. Heavy types used underground; less sensitive to corrosion<br>3) Plastic. Corrosion resistant; subject to puncture<br>4) Cast Iron. Corrosion resistant; good hydraulic characteristics<br>5) A/C. Lightweight; corrosion resistant<br>6) Lead. Present in older systems; can be a source of lead contamination in tapwater, not approved for use anymore |
| Use Transparency 6b-3. | 2. Valves<br>a. Control water flow<br>b. Control backflow<br>c. Adjust water levels and pressures<br>d. Isolate sections of system for repair<br>e. Types: |
| Explain types, functions, and purposes of valves. Sketch a simple diagram of a distribution system on the chalkboard. Ask students to identify locations where these valves might be used. | 1) Shut-Off valves stop flow of water.<br>2) Check valves permit water to flow in one direction only.<br>3) Flow control valves provide uniform flow at varying pressures.<br>4) Relief valves permit water to excape from the system to relieve excess pressure.<br>5) Float valves respond to high water levels to close an inlet pipe.<br>6) Altitude valves shut off flow of water to storage tanks at a preset level to avoid overflow.<br>7) Blowoff valves provide a means to flush sediments from low points/deadends in the distribution system.<br>8) Air relief valves are used at high points to release entrapped air. |

| INSTRUCTOR GUIDELINES | PRESENTATION OUTLINE |
|---|---|
| | 9) Pressure reducing valves are used for reducing pressure between a high and low pressure area. |
| | 10) Hydrants provide water for firefighting as well as a means to flush system. |
| Explain other components and their purposes and functions. Use the diagram to demonstrate locations of all system components. | 3. Meters<br>- Monitor flow through various sections to provide regulation, reimbursement, and maintenance. |
| | 4. Meter vaults<br>- Protect meters and controls |
| | 5. Thrust blocks and anchors<br>- Protect against pipe movement |
| | B. Sanitary Risks (30 minutes) |
| | 1. Is proper pressure maintained throughout the system?<br>a. Inadequate working pressure<br>- Backsiphonage/backflow potential<br>b. Pressure maintenance during peak demand |
| Use questions to guide class discussion. | 1) Explain how low pressure or pressure fluctuation might contribute to backsiphonage.<br>2) Why must the pressure controls be adjusted to adapt the system to demand fluctuation?<br>3) What controls would be used to make these adjustments? |
| | 2. What types of construction materials are used?<br>a. Pipes<br>b. Caulking materials |
| Ask students what information would be desired on a distribution plan. | 3. Are plans of the water system available and current?<br>a. Minimum of plan<br>- Locations<br>- Main size<br>- Valve location<br>b. Ability to isolate sections without loss of service to the system<br>c. Deadends |
| Describe the importance of each of these factors on the sanitary risks of the water system. | 4. Does the utility have an adequate maintenance program?<br>a. Frequency of main breaks<br>b. Pressure testing<br>c. Flushing program<br>d. Valve maintenance program<br>e. Corrosion control<br>f. Disinfection procedures |
| Briefly describe disinfection procedures. | 5. Is the system interconnected with any other water system?<br>a. Drought<br>b. Emergency |

# Distribution Systems

# TYPES OF PIPE

- Cast Iron/Ductile Iron
- Abestos Cement
- Lead
- Galvanized
- Copper
- Plastic

# VALVES

- Gates
- Check
- Flow Control
- Blowoff
- Altitude
- Air Relief
- Hydrants

## UNIT 6b: Cross-Connections - "The Need-to-Know"

### Unit Summary

Types and Characteristics
Sanitary Risks
Surveying for Cross-Connection Hazards
Exercise I: Protection Against Cross-Connections

### Unit Objectives

Students will be able to assess the sanitary risks related to cross-connections with a minimum of 80% accuracy.

### Logistics

Approximate Presentation Time: 30 minutes

Instructor Materials

- Basic material
- Transparencies 6b-4 through 6b-14

Student Material

- Reference Manual, Unit 6b

References

- Small Water Systems Serving the Public (Chapter 15)
- Cross-Connection Control Manual
- Water Supply System Operations (Chapters 6 and 8)

| INSTRUCTOR GUIDELINES | PRESENTATION OUTLINE |
|---|---|
| Use Transparency 6b-4.<br><br>Define cross-connection. Draw simple diagram on chalkboard showing the two types of connections.<br><br>Use Transparency 6b-5. Define backflow and backsiphonage.<br><br>For each case shown, ask students to identify contact point of connection, and to explain how reversed flow might result.<br><br>Use example situations; have students identify whether backflow or back-siphonage and recommend control.<br>Use questions to guide class discussion.<br><br>Use Transparencies 6b-6 through 6b-13 to show various types of preventive devices. Ask students to explain how each would prevent reverse flow.<br><br>List underlined topics on chalkboard. Ask students to list possible sanitary risks to potable water supplies.<br><br>Explain how each factor is a potential risk. Discuss degree of risk.<br><br>Use personal experiences and anecdotes to relate the course material to actual situations an inspector may encounter during a sanitary survey. | A. Types and Characteristics (10 minutes)<br>1. Cross-connection: A connection between a drinking (potable) water system and unapproved (nonpotable) water<br>2. Types of cross-connections<br>a. Pipe-to-pipe<br>b. Pipe-to-water<br>3. Contamination Hazard<br>Contamination hazards result from polluted fluids entering the potable system through the cross-connection, generally when distribution pressure is inadequate.<br>a. Backsiphonage occurs when a negative pressure or partial vacuum is created in the potable system.<br>b. Backflow occurs when the pollution source pressure is greater than that in the potable system.<br>1) What is the major difference between backflow and back-siphonage?<br>2) How can a building be protected against backsiphonage?<br>4. Contamination Prevention<br>a. Removal of physical connection<br>1) Air gap separators<br>2) Surge tanks with air gaps<br>b. Double check<br>c. Approved backflow prevention devices<br>1) Vacuum breaker<br>2) Reduced pressure zone<br>3) Swing connection<br>4) Barometric loop<br><br>B. Locations (5 minutes)<br>1. Unauthorized Connections from Facility<br>a. To other systems, i.e., fire systems<br>b. To unapproved wells<br>c. Restricted uses<br>- Fixtures and equipment regulated by ordinance<br>2. Uncontrolled/Unmonitored Connections from Facility<br>a. To hazardous water uses<br>1) Wastewater treatment plants<br>2) Hospitals (health care facilities)<br>b. To intermediate hazards<br>1) Schools<br>2) Homes<br>3) Other<br>c. No airgap in service line<br>d. No backflow/backsiphonage prevention devices |

| INSTRUCTOR GUIDELINES | PRESENTATION OUTLINE |
|---|---|
| | e. Insufficient maintenance of device<br>1) Inadequate for flow rate<br>2) Wrong devices<br>3) Breakdown<br>4) Testing |
| Ask students to explain why pressure maintenance is critical in preventing contamination. Ask how an inspector might determine that a facility is having pressure problems. | 3. Pressure Fluctuations<br>a. Vacuum at facility<br>1) Inadequate pumping<br>2) Emergency - fire, drought, etc.<br>b. Reduced pressure in service line<br>1) Blockage in pipes<br>2) Break in pipes<br>3) Hydrant breaks |
| Ask questions that review sanitary risk factors and lead to detailed discussion of how risks occur. | 4. Questions<br>a. Why must cross-connection control devices be carefully checked after a large fire?<br>b. What should a plumber know about cross-connections before working in a community served by a water facility?<br>c. What should a home owner know about cross-connections? |
| | C. Sanitary Risks (15 minutes)<br>1. Does the utility have a cross-connection prevention program?<br>- Requirements:<br>a. Authority to establish program<br>b. Technical provisions relating to eliminating backflow and cross-connections<br>c. Penalty provisions for violations |
| Use personal experiences and anecdotes to relate the course material to actual situations an inspector may encounter during a survey. | 2. Are backflow prevention devices installed at all appropriate locations and tested periodically?<br>a. Locations<br>1) Wastewater treatment plants<br>2) Hospitals<br>b. Periodic testing necessary |
| Use Transparency 6b-14.<br><br>Emphasize importance of inspectors to point out problems at plant since cross-connections there can affect whole system. | 3. Are cross-connections present at the treatment plant?<br>a. Submerged inlets to solution tanks (hypochlorite, fluoride, etc.) without backflow protection<br>b. Connections between solution tanks and sewers<br>c. Split chemical feed going to raw and finished water<br>d. Finished water and supply waterlines connected<br>e. Finished water used for priming raw water pumps without backflow prevention<br>f. Garden hoses in buckets, meter vaults, sinks filled with water |

# A Cross-Connection is?

**A Connection Between a Drinking Water System and Unapproved Water.**

# Types of Cross-Connections

- Backsiphonage Backflow
- Backpressure Backflow

# ATMOSPHERIC VACUUM BREAKER

STYLE 1

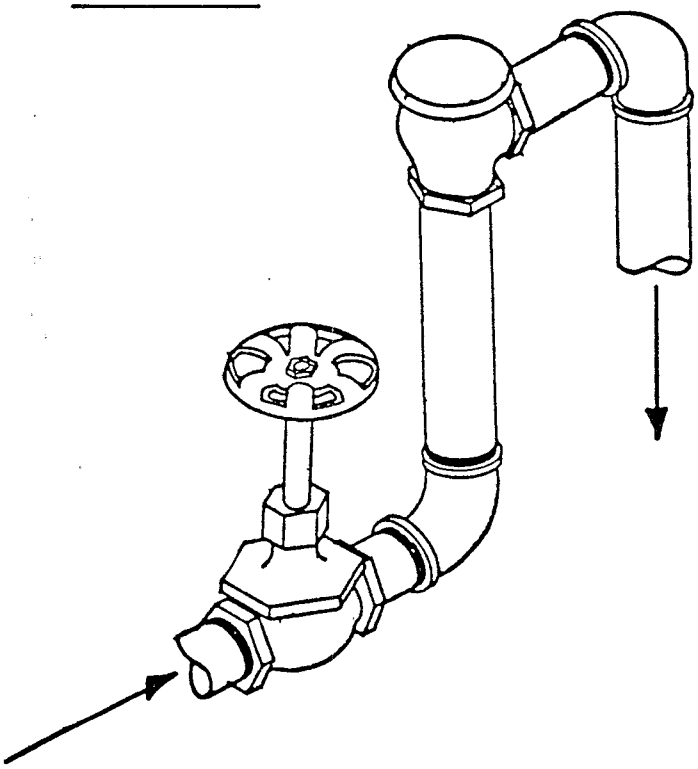

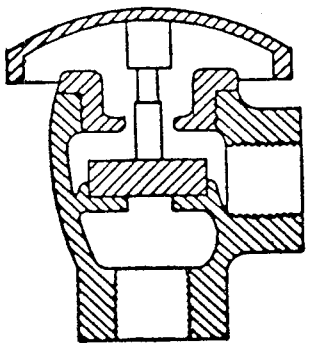

VACUUM BREAKER CROSS SECTION
(SHOWN OPEN TO ATMOSPHERE)

VALVES NOT ALLOWED DOWNSTREAM FROM ATMOSPHERIC VACUUM BREAKER.

STYLE 2

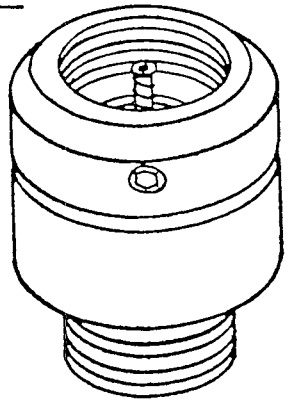

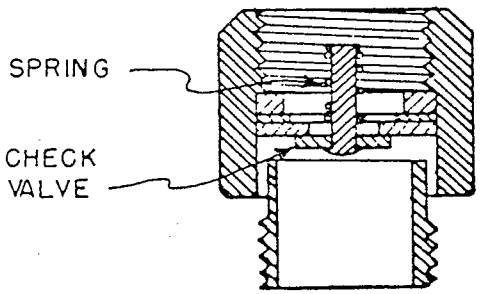

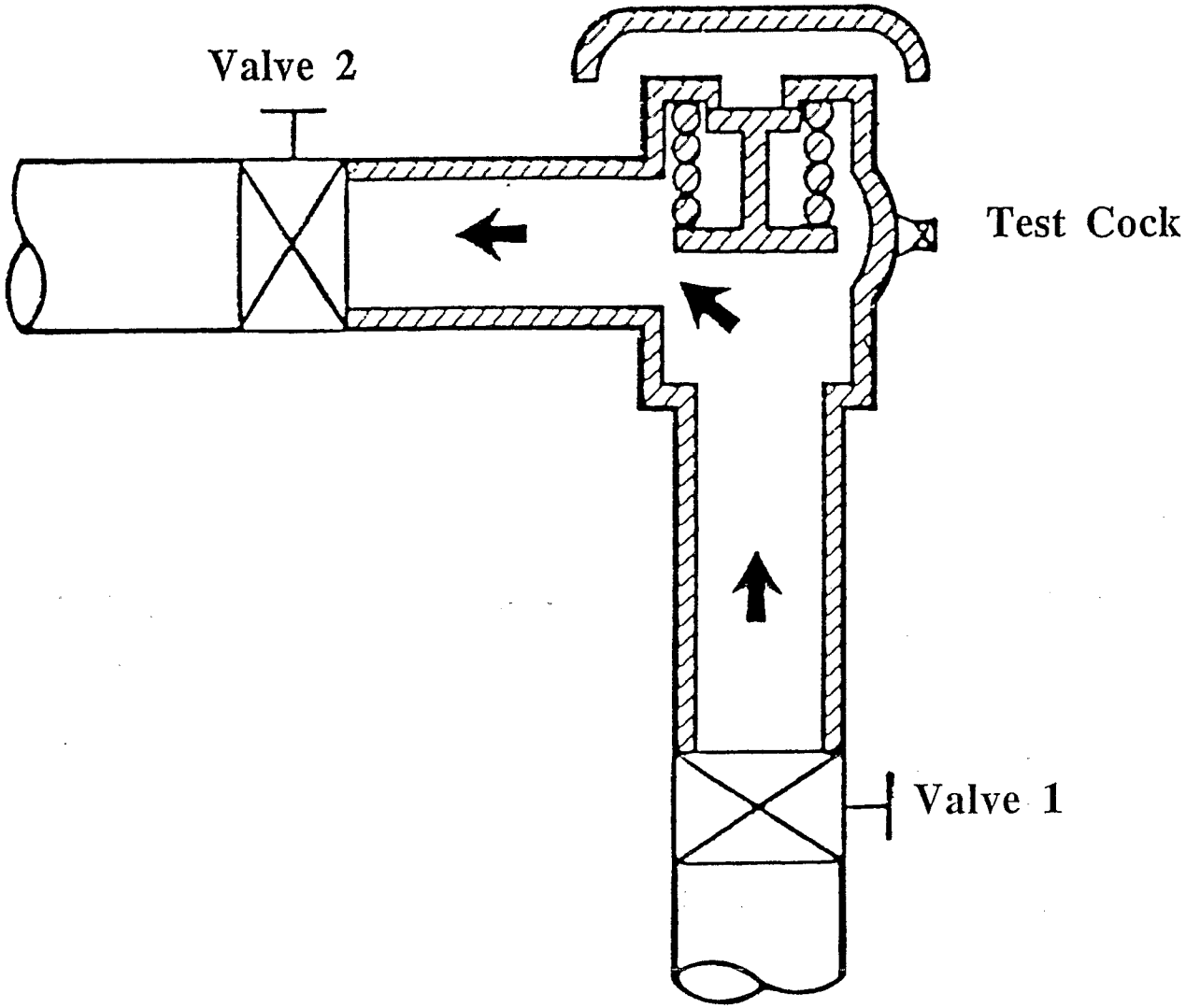


# Pressure-type vacuum breaker installation

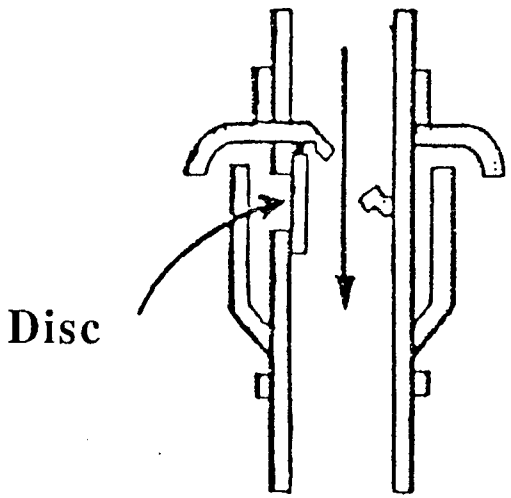


Disc in Normal Flow Position

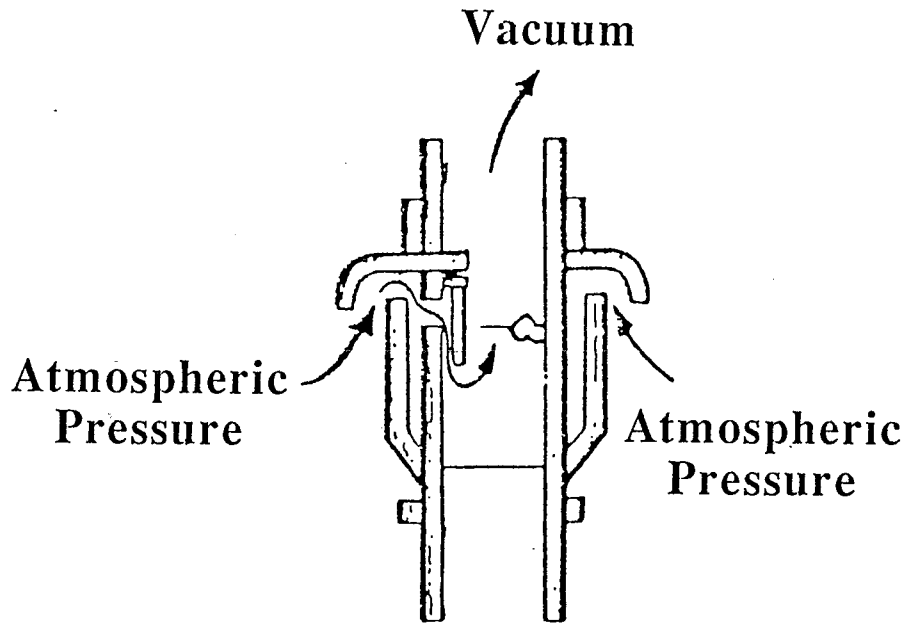


Flow Just after Vacuum is Applied

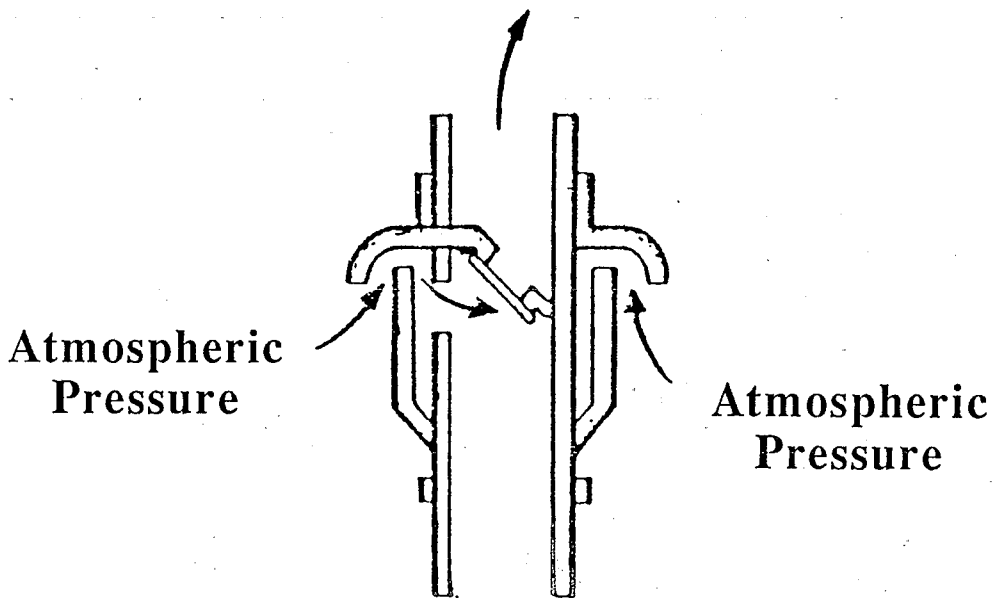

# PRESSURE VACUUM BREAKER

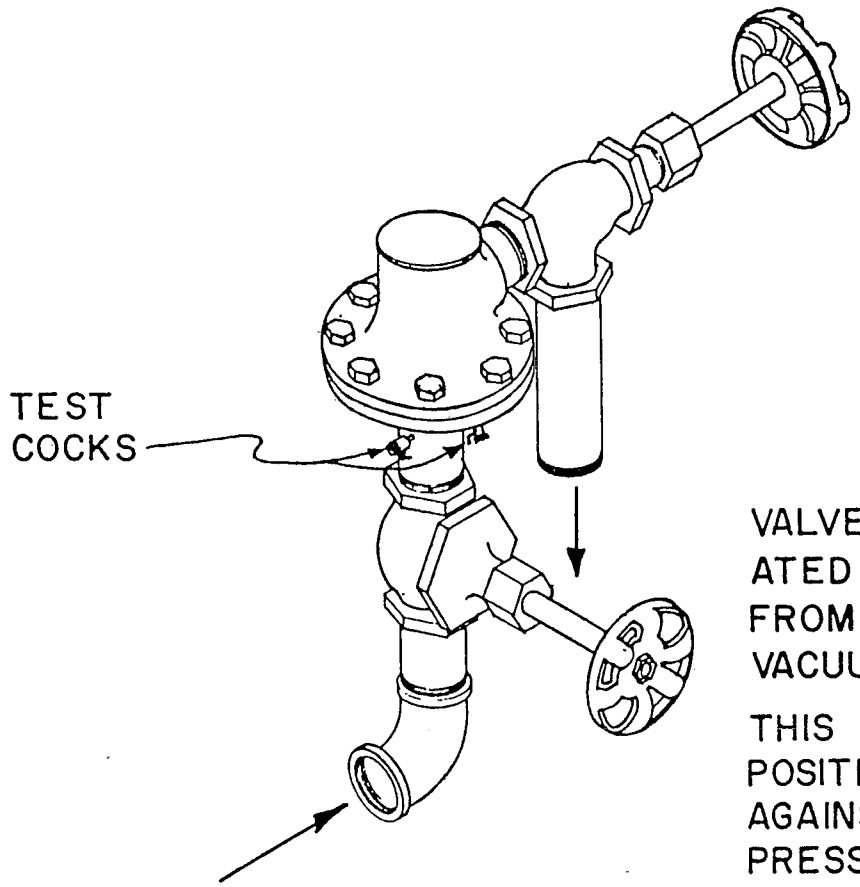


VALVES MAY BE LOCATED DOWNSTREAM FROM PRESSURE VACUUM BREAKER.

THIS UNIT IS NOT POSITIVE PROTECTION AGAINST BACK PRESSURE.

# TYPICAL INTERNALLY WEIGHTED DOUBLE CHECK VALVE ASSEMBLY

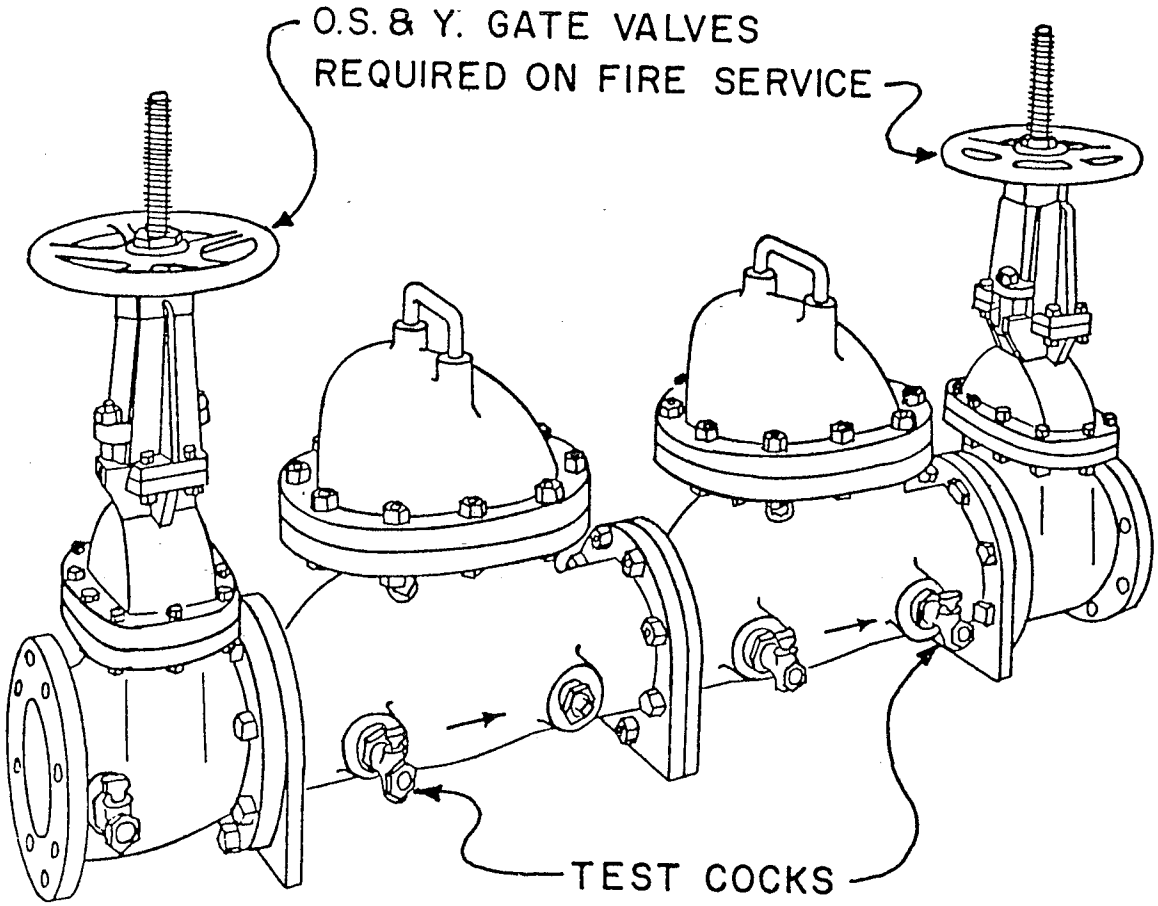

# TYPICAL SPRING LOADED DOUBLE CHECK VALVE ASSEMBLY

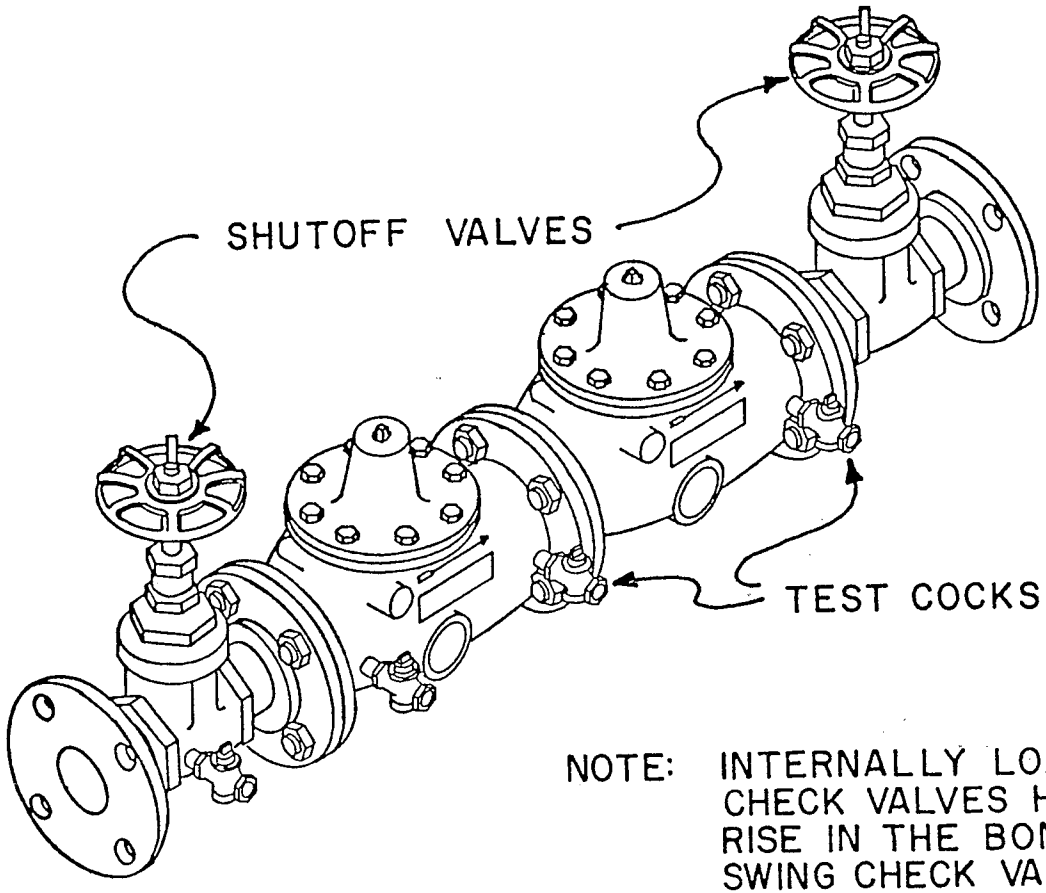


NOTE: INTERNALLY LOADED CHECK VALVES HAVE A RISE IN THE BONNET. SWING CHECK VALVES NORMALLY HAVE NO RISE IN THE BONNET.

# TYPICAL REDUCED PRESSURE BACKFLOW PREVENTION DEVICE

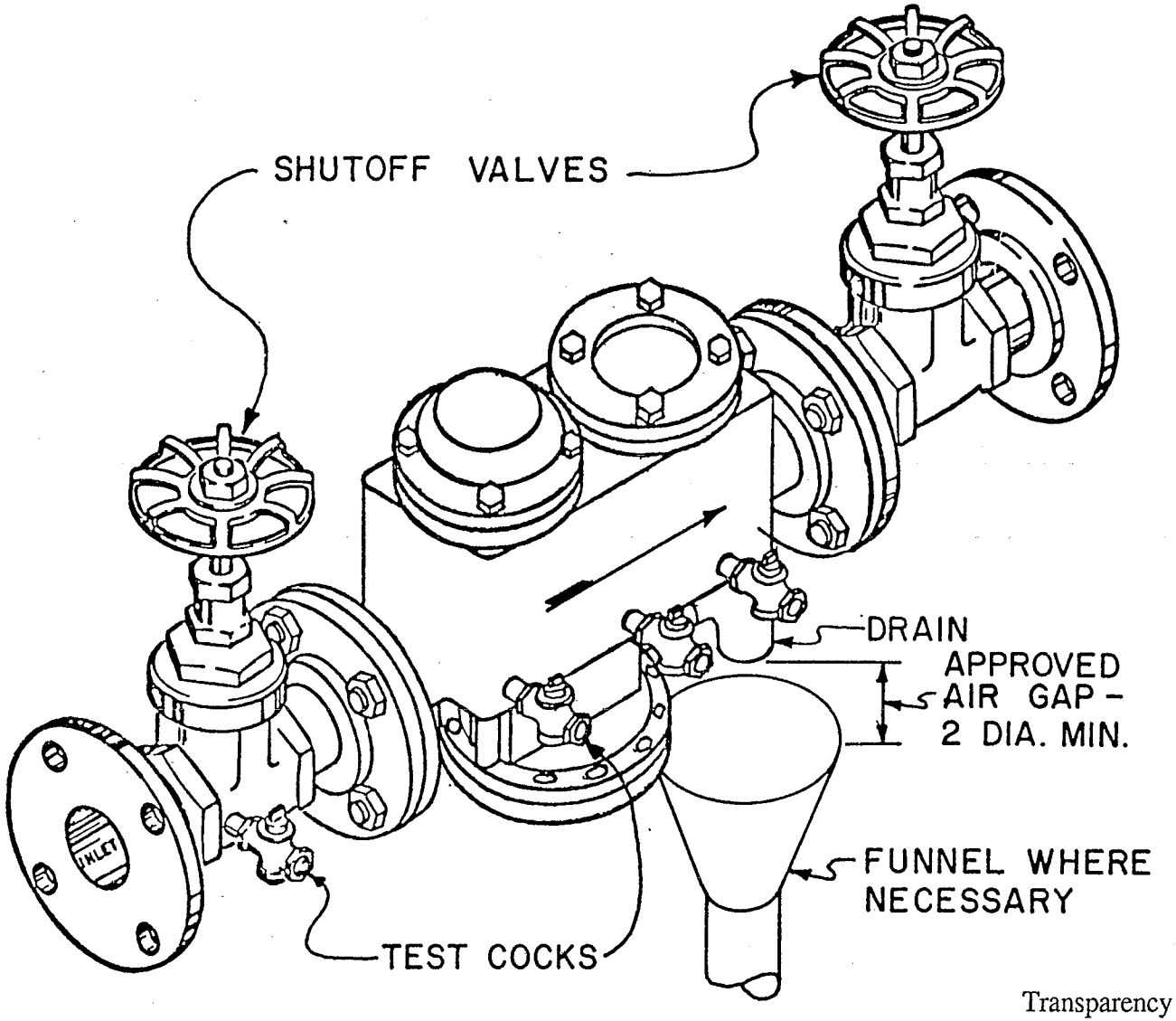


Transparency 6b-12

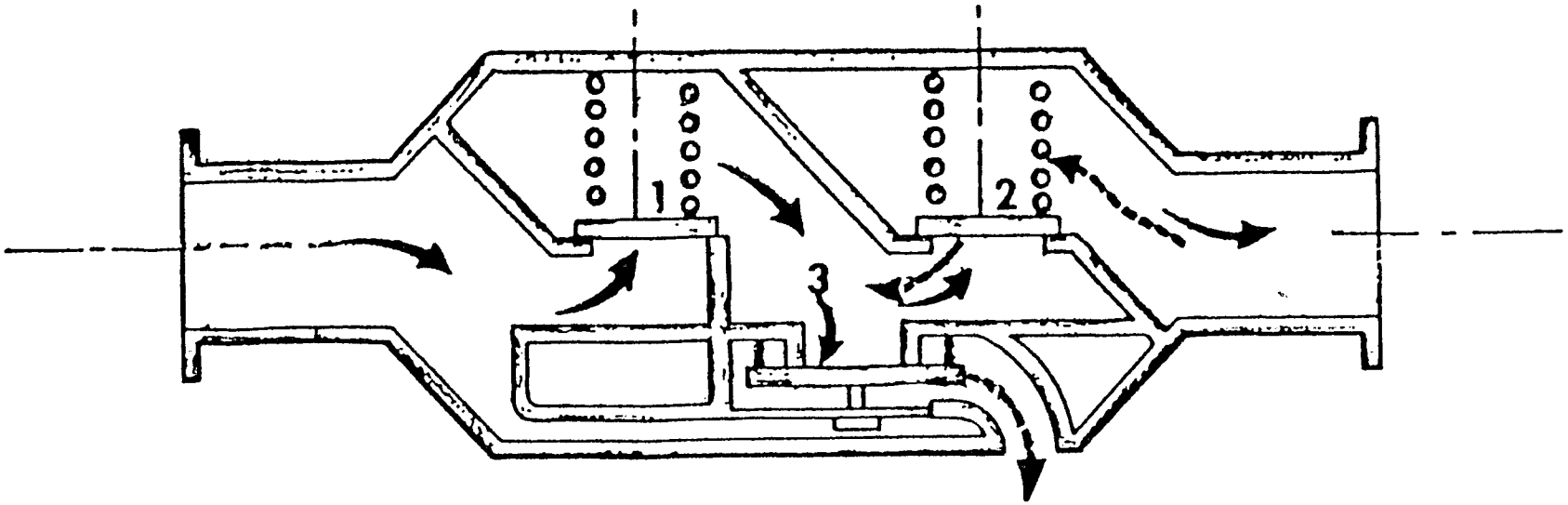


Normal Direction Of Flow

Reversed Direction of Flow

# Reduced pressure zone backflow preventer - principle of operation.

# Treatment Plant Situations:

- Submerged Inlets
- Solution Tank-Sewer Connections
- Split Chemical Feeds
- Finished Raw Water Connections
- Classic "Garden Hose" Situations

## UNIT 7: MONITORING/RECORDKEEPING - "THE NEED-TO-KNOW"

**Unit Summary**

Monitoring Responsibility
Monitoring Requirements
Recordkeeping
In-plant Monitoring

**Unit Objectives**

Students must be able to determine facility compliance with the monitoring requirements with a minimum of 80% accuracy.

**Logistics**

Approximate Presentation Time: 45 minutes

Instructor Materials

- Basic material
- Transparencies 7-1 through 7-6
- Local standards

Student Materials

- Reference Manual, Unit 7

Student Preparation

- Read Unit 7 prior to the session

Unit References

- Local Water Quality Standards
- Water Treatment Plant Operation (Volume I, Chapter 10)

Basic Material

| INSTRUCTOR GUIDELINES | PRESENTATION OUTLINE |
|---|---|
| Use Transparency 7-1. | A. Monitoring (20 minutes)<br>- Responsibilities of Water Purveyor:<br>1. Arrange for all applicable sampling required in the regulations.<br>2. Arrange for sample examinations at approved laboratory. |
| Discuss the responsibilities for monitoring that rest with the water purveyor. | |
| Use Transparency 7-2. | |

## FREQUENCY CONSIDERATIONS FOR SAMPLING AND ANALYSIS

### MICROBIOLOGICAL

| CONTAMINANT | SURFACE SOURCE | GROUND SOURCE |
|---|---|---|
| Coliform Bacteria | Monthly, based on population served<br><br>Community systems of less than 1,000 people, a minimum of one per month<br><br>Noncommunity systems, a minimum of one per calendar quarter | Same as for surface sources except that agency may reduce to one sample per calendar quarter |

### INORGANIC CHEMICALS

(Applies only to community systems except for nitrate, which applies to both community and noncommunity)

| CONTAMINANT | SURFACE SOURCE | GROUND SOURCE |
|---|---|---|
| Arsenic<br>Barium<br>Cadmium<br>Chromium<br>Lead<br>Mercury<br>Selenium<br>Silver<br>Fluoride<br>Nitrate | Analysis at 1-year intervals | Analysis at 3-year intervals |

### ORGANIC CHEMICALS

| CONTAMINANT | SURFACE SOURCE | GROUND SOURCE |
|---|---|---|
| Endrin<br>Lindane<br>Methoxychlor<br>Toxaphene 2,4-D<br>2,4,5-TP Silvex | Analysis at 3-year intervals | Analysis only if required by the state |
| Total Trihalomethanes (TTHM) | Sampling and analysis conducted quarterly | |

(NOTE: Individual jurisdictions may require greater frequency of sampling and analysis.)

FREQUENCY CONSIDERATIONS FOR SAMPLING AND ANALYSIS (CONTINUED)

RADIOACTIVITY (Applies only to community-type systems)

| CONTAMINANT | SURFACE SOURCE | GROUND SOURCE |
|---|---|---|
| Natural Radioactivity | Analysis completed at 4-year intervals | Analysis completed within 3 years after effective date; thereafter at 4-year intervals |

SODIUM (Applies only to community-type systems)

| | SURFACE SOURCE | GROUND SOURCE |
|---|---|---|
| | Sampling analysis conducted annually | Sampling analysis conducted every 3 years |

CORROSIVITY CHARACTERISTICS (Applies only to community-type systems)

| | SURFACE SOURCE | GROUND SOURCE |
|---|---|---|
| (One round of sampling and analysis) | Two samples to be taken annually | Only one sample and analysis required |

(NOTE: Individual jurisdictions may require a greater frequency of sampling and analysis.)

TURBIDITY

| | SURFACE SOURCE | GROUND SOURCE |
|---|---|---|
| | Sampling of at least once per day | Not applicable |

| INSTRUCTOR GUIDELINES | PRESENTATION OUTLINE |
|---|---|
| Use the question to promote class discussion.<br><br>Alert students that there are contaminants other than those covered by the regulations, and to be on the lookout for unusual conditions that might pose a risk of contamination.<br><br>Ensure that students have a copy of the local standards and have them locate section on sampling and analysis for future reference. | 1. How would an inspector determine that a facility has met the frequency requirements for sampling and analysis? |
| Use the question to promote class discussion. | 2. When would an inspector use sampling and analysis information? |
| Use Transparency 7-3.<br><br>Discuss requirements for recordkeeping. | B. Recordkeeping (5 minutes)<br>1. Bacteriological analyses - for at least 5 years<br>2. Chemical analyses - for at least 10 years<br><br>Actual laboratory reports may be kept or data may be transferred to tabular summaries, provided that the following information is included:<br>a. Date, place, time of sampling, name of person collecting<br>b. Identification of routine distribution system sample, check samples, raw or process water samples, special-purpose samples<br>c. Date of analyses<br>d. Lab and person responsible for performing analysis<br>e. Analytical method used<br>f. Results of analysis<br>3. Records of action taken to correct violations - for at least 3 years after last action was taken with respect to a particular violation<br>4. Copies of written reports, summaries, or communications relating to sanitary surveys conducted by the facility, private consultant, or local agency - for at least 10 years after completion of the sanitary survey involved. |

| INSTRUCTOR GUIDELINES | PRESENTATION OUTLINE |
|---|---|
| | 5. Records concerning scheduling of improvements not less than 5 years following expiration of scheduling time |
| Use Transparencies 7-4 and 7-5.<br><br>Discuss reasons for in-house monitoring. | C. In-house Monitoring (20 minutes)<br>1. Reasons for In-house Monitoring:<br>a. Important for proper operation of treatment units<br>b. Identifies trends in water quality<br>c. Identifies problems in water treatment before finished water quality is affected |
| Use Transparency 7-6. Draw sample point schematic on blackboard. Ask students for reasons for particular analysis. See schematic provided. | 2. Sample Points and Parameters:<br>a. Dependent on type of treatment<br>b. Frequency dependent on type of source, variability of source, importance of parameter<br>3. Monitoring Program Evaluation:<br>a. Is operator competent and certified to perform the tests?<br>b. Are testing facilities and equipment adequate?<br>c. Do reagents have an unexpired shelf life?<br>d. Are records of the test results maintained?<br>e. Are tests and operational results supplied to the local regulatory agency (as required)? |

## Table 7-2 Sample Points and Analysis

**raw water** _____> **rapid mix** _____> **flocculation** _____> **settling** _____

| sample | sample | sample |
|---|---|---|
| routine chemicals<br>bacteria<br>jar test | alkalinity<br>pH | alkalinity<br>pH |

**Use** <_____ **chlorination** <_____ **filtration** <_____

| sample | sample | sample |
|---|---|---|
| routine chemicals<br>bacteria | turbidity<br>pH | turbidity<br>pH |

**Routine Analysis:**

| | | | |
|---|---|---|---|
| color | iron | alkalinity | chloride |
| turbidity | manganese | pH | fluoride |
| odor | hardness | nitrogen series | |

# Monitoring/Recordkeeping

- Why?
- Requirements
- How does Inspector Determine Compliance

# Responsibilities:

- Arrange for Required Sampling
- Sample Examination at an approved Laboratory.

# Recordkeeping

# IN-HOUSE MONITORING

# Why Monitor?

- Proper Operation
- Identify Water Quality Trends
- Identify Water Treatment Problems

# SAMPLING

## Importance

## Troubleshooting Problems

## UNIT 8: MANAGEMENT/SAFETY - "THE NEED-TO-KNOW"

### Unit Summary

Personnel
Finance
Emergency Planning
Safety

### Unit Objectives

With a minimum of 80% accuracy, the students will be able to evaluate the management and safety aspects of a water treatment operation.

### Logistics

Approximate Presentation Time: 45 minutes

Instructor Materials

- Basic material
- Transparencies 8-1 to 8-3
- Chalkboard

Student Material

- Reference Manual, Unit 8

Student Preparation

- Read Unit 8 prior to the session

Unit References

- Manual of Water Utility Operation
- Water Treatment Plant Operation (Volume I)
- Water Supply System Operation

Basic Material

| INSTRUCTOR GUIDELINES | PRESENTATION OUTLINE |
|---|---|
| Use Transparency 8-1. | A. Management (15 minutes) |
| Use Transparency 8-2. | - Personnel<br>1. Are personnel adequately trained and/or certified?<br>a. In-house training programs<br>b. Correspondence courses<br>c. Short courses off island |
| Discuss aspects of management that are important to the operation of the system. | 2. Are there sufficient personnel?<br>- Sickness, vacations |
| Ask students for factors affecting personnel requirements. | 3. Are the financing and budget satisfactory?<br>a. Present operation and maintenance<br>b. Future replacements<br>c. Future expansion |
| Use Transparency 8-3. | 4. Is an emergency plan available and workable? |
| Emphasize the importance of safety for both the inspector and the operator. | B. Safety (30 minutes)<br>1. Source of hazards<br>a. Electrical shock<br>b. Exposure to chemicals<br>c. Drowning<br>d. Working in confined spaces<br>e. High-intensity noise<br>f. Sprains and strains due to lifting<br>g. Slips and falls |
| Briefly discuss hazards and safety precautions. | 2. Safety Equipment<br>a. Helmets<br>b. Goggles<br>c. Gloves<br>d. Shoes<br>e. Respirators<br>f. Self-contained breathing apparatus<br>3. Safety Concerns<br>a. Is adequate safety and personal protective equipment provided?<br>b. Are the facilities free of safety hazards? |
| | C. Is chemical storage compatibility adequate? |

# MANAGEMENT/ SAFETY

Transparency 8-1

# MANAGEMENT

Personnel
Finance
Emergency Planning

# Safety

- Electrical Shock
- Chemicals
- Drowning
- Confined Spaces
- Noise
- Lifting
- Slips/Falls

## UNIT 9: SURVEYS - "THE NEED-TO-KNOW"

**Unit Summary**

Survey Techniques

**Unit Objectives**

Students will be able to plan and conduct an effective sanitary survey of a ground water and surface water system with 80% accuracy.

**Logistics**

Approximate Presentation Time: 60 minutes

Instructor Materials

- Basic material
- Transparencies 9-1 to 9-5

Student Material

- Reference Manual, Unit 9

Student Preparation

- Read Unit 9 prior to the session

Unit References

- "Sanitary Survey Field Handbook for Sanitarians of Micronesia"

Basic Material

| INSTRUCTOR GUIDELINES | PRESENTATION OUTLINE |
|---|---|
| Use Transparencies 9-1 and 9-2. | Schedule<br>Planning schedule<br>A. Estimating time<br>B. Phases of survey |
| Emphasize purpose of sanitary survey. | 1. Preparation Phase<br>a. Review of available records |
| Use Transparency 9-3. | b. Review of chemical and bacteriological files |
| Point out the importance of this phase. | c. Review of self-monitoring reports<br>d. Make contact with owner/operator and establish survey date and time<br>e. Notification of any schedule changes |
| Use Transparency 9-4. | 2. Onsite Phase<br>a. Review of system complaints |
| Use personal experiences and anecdotes to relate program material to situation that inspectors may encounter. | b. Review of monthly operating reports and in-house monitoring<br>c. Complete investigation of the water supply, treatment, and distribution facilties<br>d. Make general description of the system and a flow diagram<br>e. Exchange of information between operator and inspector<br>f. Completion of form<br>g. Sampling<br>h. Debriefing |
| Use Transparency 9-5. | 3. Report Writing Phase<br>a. Function |
| Explain functions of a survey report. | 1) Formal notification of deficiencies<br>2) Motivate corrective action<br>3) Provide records of compliance, future inspections<br>b. Activities<br>1) Complete formal report |

| INSTRUCTOR GUIDELINES | PRESENTATION OUTLINE |
|---|---|
| | 2) Notification of appropriate organizations<br>3) Followup on technical assistance/questions asked by owner<br>4) Notification of variance of written evaluation from oral debriefing |
| Review sanitary survey forms. | c. Sample forms<br>- Sample forms provided in the publication Sanitary Survey Field Handbook for Sanitarians of Micronesia |

# SURVEYS

## Components of Sanitary Surveys

## Use of forms

Transparency 9-1

# Schedule

# Preparation Phase

# Onsite Phase

# Report Writing

## UNIT 10: COMMUNICATIONS/PUBLIC RELATIONS - "THE NEED-TO-KNOW"

**Unit Summary**

Communications
Public Relations of Survey

**Unit Objective**

Students will be able to determine with whom to communicate and practice how to communicate before, during, and after the on-site visit.

**Logistics**

Approximate Presentation Time: 30 minutes

Instructor Materials

- Basic material
- Transparencies 10-1 to 10-3

Student Material

- Reference Manual, Unit 10

Student Preparation

- Read Unit 10 prior to the session

| INSTRUCTOR GUIDELINES | PRESENTATION OUTLINE |
|---|---|
| Use Transparencies 10-1 and 10-2. | A. Communications |
| Ask for student suggestions on what should be accomplished in each phase of communication. | 1. Prior to Onsite Visit<br>a. Owner of water system<br>1) Obtain cooperation and establish survey dates<br>2) Explain purposes of survey<br>3) Request that necessary information be available<br>b. Operator<br>1) Coordinate gaining entry to site<br>2) Ensure presence of operator during survey<br>c. Local health unit/other departments<br>1) Ensure cooperation and coordination<br>2) Obtain information pertinent to system |
| Briefly discuss activities involved with each item. | 2. During Onsite Visit<br>a. Owner of water system<br>1) Obtain information pertinent to system<br>2) Explain function of survey results<br>3) Explain recommended actions<br>4) Explain what action will result from survey |
| Use personal experiences and anecdotes to illustrate situations students may encounter during a survey. | b. Operator<br>1) Obtain information pertinent to system<br>2) Exchange of technical information<br>3) Explain survey results<br>4) Explain recommended action |
| | 3. After Onsite Visit<br>a. Owner of water system<br>1) Notification of deficiencies<br>2) Instructions on corrections<br>3) Compliance schedule for corrections<br>b. Regulatory agency<br>- Case report where formal enforcement is indicated<br>c. Public<br>- If system is not in compliance with:<br>1) applicable water quality standards<br>2) applicable testing procedure<br>3) required monitoring<br>4) scheduled corrections |

| INSTRUCTOR GUIDELINES | PRESENTATION OUTLINE |
|---|---|
| Use Transparency 10-3. | B. Public Relations<br>- Importance of establishing a good relationship with owner/operator |
| Use personal experiences and anecdotes to illustrate actual situations students may encounter during a survey. | |

# COMMUNICATIONS

# Phases of Communications

- Prior to Onsite Visit
- During Onsite Visit
- After Onsite Visit

# Public Relations

## UNIT 11: TECHNICAL ASSISTANCE - "THE NEED-TO-KNOW"

**Unit Summary**

Providing Technical Assistance
Common Problems

**Unit Objective**

With a minimum of 80% accuracy students will be able to troubleshoot operational and procedural problems in order to improve the operation of the system or decide when the problem-solving should be referred to more experienced personnel.

**Logistics**

Approximate Presentation Time: 30 minutes

Instructor Materials

- Basic material
- Transparencies 11-1 to 11-2

Student Material

- Reference Manual, Unit 11

Student Preparation

- Read Unit 11 prior to the session

Unit References

- None

| INSTRUCTOR GUIDELINES | PRESENTATION OUTLINE |
|---|---|
| Use Transparency 11-1.<br><br>Explain to the students that this section is designed as a checklist for investigating the possible cause(s) for no or low water pressure, unsatisfactory water quality, and esthetically objectionable water. The information will be used to provide technical assistance to water system personnel. | A. Technical Assistance (15 minutes)<br>1. Importance of providing technical assistance:<br>a. Small systems frequently with technical staff<br>b. Can provide immediate resolution of a sanitary risk<br>2. Importance of how assistance is provided:<br>a. Dangers of snap judgments<br>b. Request help from more experienced personnel<br>c. Make recommendations in terms that can be understood |
| Use Transparency 11-2.<br><br>State the problem.<br><br>Ask students to identify the health risks associated with the problem. List on chalkboard each underlined water system component as it is discussed. Ask students to suggest possible causes of the problem relative to that component.<br><br>Ask students if there might be indicators that would alert the operator or inspector to the problem (i.e., vibrating equipment, blown fuses, water leaks, etc.)<br><br>Have students suggest solutions to the problems.<br><br>Make pertinent notes on chalkboard under the appropriate heading.<br><br>Use the basic material to guide the discussion and to present additional information. | B. Common Problems<br>1. Problem 1: No or Low Water Pressure (5 minutes)<br>a. Health Risk: Contamination from backflow (cross-connections)<br>b. Possible Causes:<br>1) Water Source<br>a) Water table has dropped below well screen<br>b) Clogging of well screen<br>c) Spring flow diminished<br>2) Well or Intake Structure<br>a) Piping blocked<br>b) Defective valves or valve setting<br>c) Plugged foot valve and/or strainer<br>d) Break in wall of collection chamber<br>e) Well pipe ruptured above water table (shallow well with suction pump)<br>3) Treatment equipment<br>- Electrical safety control activated to cut off water pump due to inoperative chemical feed pump<br>4) Pumping System<br>a) Power failure<br>b) Low line voltage<br>c) Blown fuses<br>d) Shorted-out electric motor<br>e) Defective pressure switch<br>f) System valved off<br>g) Air lock in suction line<br>h) Leak on suction side of system |

| INSTRUCTOR GUIDELINES | PRESENTATION OUTLINE |
|---|---|
| Repeat the above procedures for problems 2 and 3. | i) Plugged impeller or ejector<br>j) Worn or defective pump<br>k) Discharge line check valve installed backwards<br>l) Loss of prime in piston-type pump<br>5) Storage system<br>a) Ruptured tank<br>b) Drain valve open<br>c) Float switches on gravity tank defective<br>d) Pressure switch on hydro-pneumatic storage tanks defective<br>6) Distribution system<br>a) Break in water main<br>b) Hydrant(s) open<br>c) Excessive demand over prolonged period |
| Repeat procedures for Problem 1. | 2. Problem 2: Water Quality Violates Standards (5 minutes)<br>a. Health risk: Disease and/or chemical poisoning of consumers<br>b. Possible causes:<br>1) Water source<br>- Contamination by wastewater or toxic chemicals<br>2) Well or intake structure<br>a) Onsite contamination by wastewater or toxic chemicals<br>b) Inoperative well seal<br>c) Entry of bird or animal through defective vent, open manhole, or broken screen<br>3) Treatment process<br>a) Contamination of treatment chemicals<br>b) Insufficient chlorine feed rate<br>c) Chlorine solution exhausted<br>d) Defective chemical feed equipment<br>4) Pumping system<br>a) Repair or replacement of pump part without adequate disinfection<br>b) Use of contaminated water to lubricate packing<br>c) Improper sealing of pump<br>d) Improper drainage of pump |

| INSTRUCTOR GUIDELINES | PRESENTATION OUTLINE |
|---|---|
| | 5) Storage system<br>a) Debris in storage tank<br>b) Interior of tank coated with unapproved coating<br>c) Entry of birds through broken vent of open manhole<br>6) Distribution system<br>- Iron bacteria growth in pipes |

# Technical Assistance

# When to Provide?

- After Survey is Complete
- Objective is to Evaluate Entire System
- Problem can be Caused Throughout System

## UNIT 12: CONCLUSION

**Unit Summary**

Program Review
Post-Test (Optional)
Program Evaluation (Optional)

**Unit Objectives**

Students will demonstrate the ability to conduct a sanitary survey by passing a post-test with a minimum of 80% accuracy.

**Logistics**

Approximate Presentation Time: 60 minutes

Instructor Materials

- Post-test (to be duplicated)
- Key to the post-test
- Evaluation form (see Introduction)

Unit References

- Units 1 through 11 of this manual

Basic Material

| INSTRUCTOR GUIDELINES | PRESENTATION OUTLINE |
|---|---|
| Review essential points of unit. | Areas of emphasis will be determined by instructor(s). (20 minutes) |
| Clarify any questions students may have. | |
| Administer post-test. | |
| Review post-test. | |
| Distribute evaluation form and have students evaluate the training program. | |

Learner's Code _____

Years in Water Supply _____

**Water Supply Systems-Sanitary Survey**

(Circle One)
PRE-TEST
POST-TEST

This test is intended to assess your prior knowledge of water systems and their operations. At the conclusion of the training program, a post-test will be administered to evaluate your progress and the overall effectiveness of the program. <u>There may be more than one correct answer to some of these questions</u>.

1. Smaller water systems usually have

   a. a greater variation between the average daily demand and the maximum daily demand than do larger water systems.
   b. less variation between the average daily demand and the maximum daily demand than do larger water systems.
   c. a variation between the average daily demand and the maximum daily demand similar to that of a larger water supply system.

2. Which of the following is a factor affecting the likelihood that a given source of pollution may contaminate a well?

   a. depth of well
   b. distance from well
   c. type of pollutant
   d. diameter of a well

3. A system is producing 500,000 gallons of water per day and utilizes 10 pounds of chlorine per day for disinfection. The estimated chlorine dose is

   a. 0.4 mg/l
   b. 0.2 mg/l
   c. 2.4 mg/l
   d. 4.0 mg/l

4. The best reason intakes should be located at various depths in a surface impoundment is to

   a. withdraw the maximum amount of water
   b. withdraw the best quality water
   c. provide a backup in case of clogging of an intake

5. The accepted method of determination of turbidity is

   a. Nephelometric method
   b. Jackson Unit
   c. Amperometric method

6. An increase of turbidity in a spring collection chamber after a rain indicates

   a. a defective drain valve
   b. backflow of treated water
   c. surface water contamination of the source

7. The AWWA-recommended procedure for disinfection of new water mains involves

   a. 300 mg/chlorine dosage with a 10 mg/l residual after a 3-hour contact time.
   b. 10 mg/l chlorine dosage with a 25 mg/l residual after a 1-hour contact time.
   c. 2.0 mg/l chlorine dosage with a 2 mg/l residual after a 30-minute contact time.
   d. 50 mg/l chlorine dosage with a 25 mg/l residual after a 24-hour contact time.

8. Samples for free chlorine residual

   a. can be stored up to 6 hours before analysis
   b. can be stored up to 1 hour before analysis
   c. can be stored up to 24 hours before analysis
   d. must be analyzed immediately after sampling

9. The casing in a well with a vertical turbine pump is installed to do all of the following except

   a. prevent collapse of the well
   b. support pump mechanism and pipes
   c. to exclude pollutants
   d. to provide a column of store water for pump

10. When a well is constructed, a cement grout is used to

    a. hold the pump mechanism in place
    b. fill the annular space around the well casing
    c. provide a base for the pump discharge head
    d. prevent sand from entering pump

11. Pitless adapters are used to

    a. eliminate the need for a well pit
    b. permit the direct connection of the well casing to the distribution system
    c. supply water to isolated areas during distribution system repair
    d. connect distribution system to storage facilities

12. In a vertical turbine pump, adding stages (impellers)

    a. increase the output (gpm)
    b. increases the total dynamic head capability
    c. has no effect on output or head
    d. reduces motor amps in a inverse proportion to the number of stages

13. When testing for drawdown level in a well using the air line method, the gauge indicated "0" ft. of water. Which of the following could not cause this to happen?

    a. Hole in the air line
    b. Pinched air line
    c. Water level below air line
    d. Bad gauge

14. Common problems observed in hydropneumatic storage facilities include

    a. improper air/water ratio
    b. water logged tank
    c. inadequate pressure relief system
    d. cut-in/cut-out range

15. When surveying a pump system, the items to evaluate include

    a. adequacy to meet peak demand
    b. number of pumps and their frequency of use
    c. electro/mechanical equipment
    d. excessive leak from stuffing box

16. Altitude valves are used to

    a. maintain proper level in well
    b. control storage tank to preset levels
    c. provide flow control at varying pressures
    d. permit water to flow in one direction only

17. The following are components of a distribution system:

    a. thrust blocks
    b. blow off valves
    c. pitless adapter
    d. relief valves

18. The air release-vacuum breaker valve serves what purpose on a deep well operation?

    a. When well pump initially starts, it relieves air from column pipe
    b. When well pump shuts down, it allows the column pipe to dewater
    c. Prevents air from entering system
    d. Prevents cross-connections

PRE-TEST
POST-TEST

ANSWER KEY

1. a
2. a, b, c
3. c
4. b
5. a
6. c
7. d
8. d
9. b
10. b
11. a
12. b
13. b
14. a, b, c, d
15. a, b, c, d
16. b
17. a, b, d
18. a, b, c